NACIMIENTO WATER PROJECT

DRAFT Preliminary Design Report Drawing List

BID PACKAGE 2

General

Drawing no	Title
G001	Units A1, F1, and G2 Tanks Cover Sheet
G602	Units A1, F1, and G2 General System Schematic
G603	Units A1, F1, and G2 General SCADA System Block Diagram
G604	Unit A1, F1, and G2 Tank Plans and Sections
G605	Unit A1, F1, and G2 Tank Sections
G606	Unit A1, F1, and G2 Tank Details

UNIT A1: Camp Roberts Tank

Drawing no	Title
A1-C101	Camp Roberts Tank Site Plan
A1-C102	Camp Roberts Tank Grading and Paving Plan
A1-I601	Camp Roberts Tank P&ID

UNIT F1: Rocky Canyon Tank

Drawing no	Title
F1-C101	Rocky Canyon Tank Site Plan
F1-C102	Rocky Canyon Tank Grading and Paving Plan
F1-I601	Rocky Canyon Tank P&ID

UNIT G2: Cuesta Tunnel Tank

Drawing no	Title
G2-C101	Cuesta Tunnel Tank Site Plan
G2-C102	Cuesta Tunnel Tank Grading and Paving Plan
G2-E601	Cuesta Tunnel Tank Main One-Line Diagram
G2-I601	Cuesta Tunnel Tank P&ID

COUNTY OF SAN LUIS OBISPO, CALIFORNIA
FLOOD CONTROL AND WATER CONSERVATION DISTRICT
PLANS FOR THE CONSTRUCTION OF

NWP NACIMIENTO WATER PROJECT

San Luis Obispo County Flood Control & Water Conservation District

B&V PROJECT NO. 137522
COUNTY CONTRACT NO. 300187.08
SPECIFICATION 02
UNITS A1, F1, AND G2 TANKS

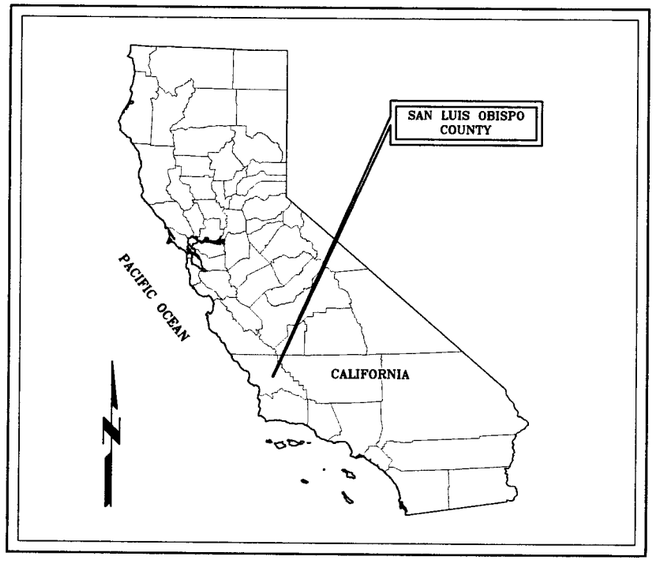

VICINITY MAP
NO SCALE

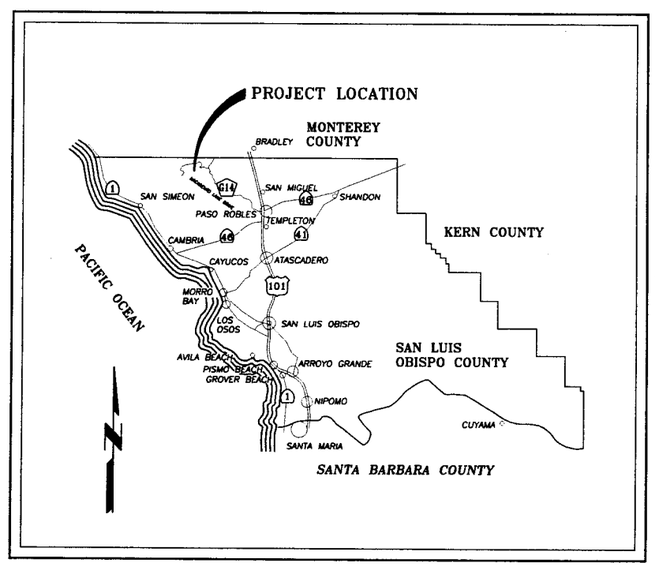

LOCATION MAP
NO SCALE

PRELIMINARY - NOT FOR CONSTRUCTION

THESE DOCUMENTS REPRESENT A 30% PERCENT COMPLETE DESIGN, ARE PRELIMINARY AND ARE NOT FOR CONSTRUCTION OR BIDDING PURPOSES. THESE DOCUMENTS WILL BE FURTHER REVISED BEFORE A FINAL DESIGN IS ACCOMPLISHED. THEY HAVE NOT RECEIVED REGULATORY REVIEW AND DO NOT HAVE FINAL APPROVAL OR ACCEPTANCE OF THE GOVERNING REGULATORY AGENCIES. THESE DOCUMENTS ARE PREPARED WITH THE STANDARD OF CARE FOR THE TIME, LOCALE, AND SYSTEM AS GIVEN IN THE DOCUMENTS. THESE DOCUMENTS ARE THE COPYRIGHTED PROPERTY OF BLACK & VEATCH AND ARE NOT TO BE REPRODUCED OR DISTRIBUTED WITHOUT THE EXPRESS PERMISSION OF BLACK & VEATCH AND THEIR CLIENT, SAN LUIS OBISPO COUNTY FLOOD CONTROL AND WATER CONSERVATION DISTRICT.

SURVEYOR'S STATEMENT

THIS MAP CORRECTLY REPRESENTS A SURVEY MADE BY ME OR UNDER MY DIRECTION IN CONFORMANCE WITH THE REQUIREMENTS OF THE LAND SURVEYOR'S ACT AT THE REQUEST OF COUNTY OF SAN LUIS OBISPO, IN _____ , _____ .

_____
L.S. XXXX (EXP. XX-XX-XXXX)

APPROVED:

_____
NACIMIENTO PROJECT MANAGER
RPE C59001 (EXP 6-30-2007)

APPROVED BY:
BLACK & VEATCH CORPORATION

_____
STEVE FOELLMI, P.E.
PROJECT MANAGER

0 1/2 1
IF THIS BAR DOES NOT MEASURE 1" THEN DRAWING IS NOT TO FULL SCALE

F0137522
D137522

NO.	BY	CK	APP	DATE	REVISIONS AND RECORD OF ISSUE

CYBNET ID: 137522-G-BP2-E0000101 XREF1:
W:\ BP2-G001.dwg XREF2:
SAVED: MCC10764, 2/10/2006 11:41:46 AM XREF3:
PLOTTED: MCC10764, 2/10/2006 11:41:48 AM XREF4:
USER: MCC10764 DWG VER: 1.2 XREF5:

BLACK & VEATCH
building a world of difference™
ENERGY WATER INFORMATION GOVERNMENT

BOYLE
ENGINEERING CORPORATION

NWP NACIMIENTO WATER PROJECT
San Luis Obispo County Flood Control & Water Conservation District

UNITS A1, F1, AND G2 TANKS
COVER SHEET

DESIGNED:	
DETAILED:	S. McCARTY
CHECKED:	
APPROVED:	
DATE:	2/22/06
BV PROJECT NO.	137522
NWP PROJECT NO.	3000187.08
SPEC	02
SHEET	G001
OF	

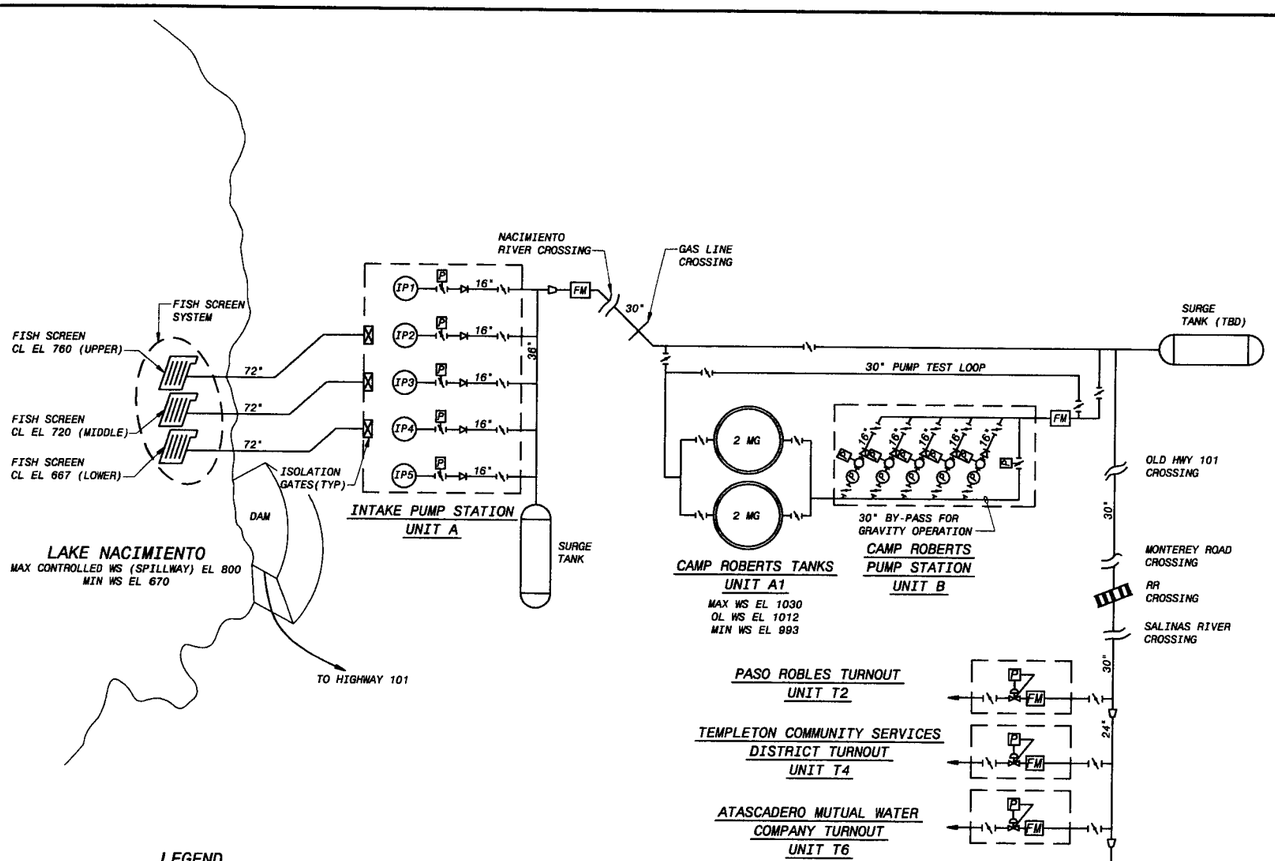

NACIMIENTO WATER PROJECT
SYSTEM SCHEMATIC
NO SCALE

LEGEND

- SCREEN SYSTEM
- ISOLATION GATE
- VERTICAL TURBINE PUMP
- MODULATING VALVE
- PNEUMATIC VALVE - OPEN CLOSE
- CHECK VALVE
- BUTTERFLY VALVE
- REDUCER
- FM — IN-LINE FLOW METER
- GATE VALVE
- PRESSURE REDUCING VALVE
- CROSSING
- SLEEVE VALVE
- OL — OPERATING LEVEL
- WS — WATER SURFACE

PRELIMINARY - NOT FOR CONSTRUCTION

IF THIS BAR DOES NOT MEASURE 1" THEN DRAWING IS NOT TO FULL SCALE

FD137522
D137522

NO.	BY:	CK.	APP	DATE	REVISIONS AND RECORD OF ISSUE

CYGNET ID: 137522-G-BP2-E0000TYGP | XREF1: G-SYTM-SCHM.DWG
WF_BP2_G002.DWG | XREF2:
SAVED: MCC10784, 2/17/2006 4:37:04 PM | XREF3:
PLOTTED: MCC10784, 2/17/2006 4:37:08 PM | XREF4:
USER: MCC10784 | DWG VER: 1.7 | XREF5:

BLACK & VEATCH
building a world of difference
ENERGY WATER INFORMATION GOVERNMENT

BOYLE
ENGINEERING CORPORATION

NWP NACIMIENTO WATER PROJECT
San Luis Obispo County Flood Control & Water Conservation District

UNITS A1, F1, AND G2 TANKS
GENERAL
SYSTEM SCHEMATIC

DESIGNED:	RWT, PRK
DETAILED:	WAS
CHECKED:	
APPROVED:	
DATE:	2/26/06
BV PROJECT NO.	137522
NWP PROJECT NO.	3000187.08
SPEC	02
	G602
SHEET OF	

NOTES:

1. FIBER OPTIC CABLE (FO), ETHERNET COMMUNICATION IS SHOWN BETWEEN THE CONTROL CENTER AND THE REMOTE SITES WHICH INCLUDE PUMP STATIONS AND TURNOUTS.
2. THE FORM OF COMMUNICATION BETWEEN THE SCADA PANEL AT EACH TURNOUT AND THE PARTICIPANT SCADA SYSTEM IS YET TO BE DETERMINED FOR PURPOSES OF THE PDR THE PARTICIPANT RTU AND ASSOCIATED COMMUNICATIONS TO THE PARTICIPANTS SCADA SYSTEM WILL BE PROVIDED BY THE PARTICIPANT.

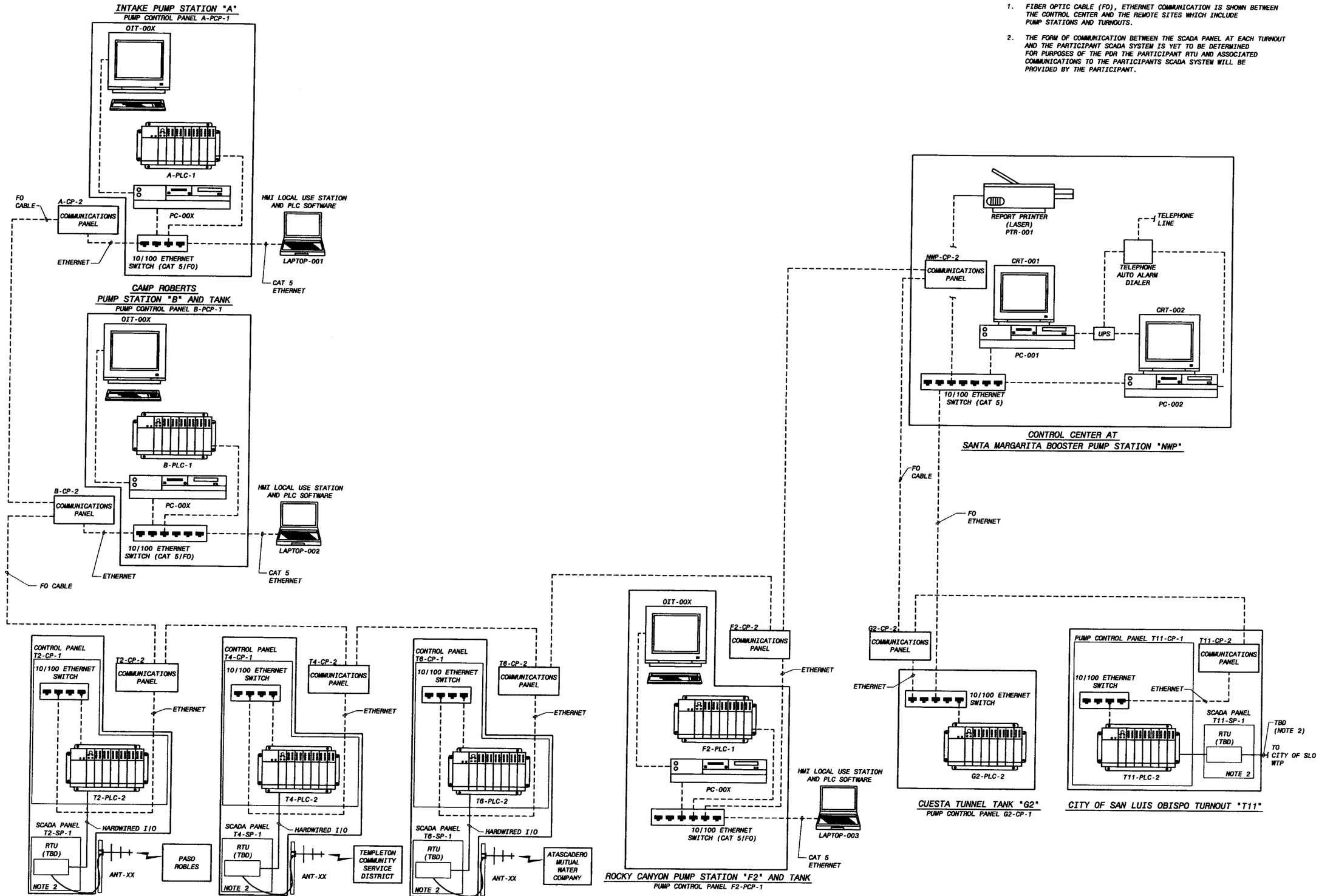

PRELIMINARY - NOT FOR CONSTRUCTION

0 1/2 1
IF THIS BAR DOES NOT MEASURE 1" THEN DRAWING IS NOT TO FULL SCALE

DATE	REVISIONS AND RECORD OF ISSUE	NO.	BY	CK	APP

CYGNET ID: 137522-G-BP2-E00007WF8
WF: BP2-0603.dwg
SAVED: WAG13008, 1/19/2006 10:44:22 AM
PLOTTED: GUT45251, 2/17/2006 3:52:11 PM
USER: GUT45251
DWG VER: 1.3
XREF1: I-SCADA.dwg
XREF2:
XREF3:
XREF4:
XREF5:

BLACK & VEATCH
building a world of difference
ENERGY WATER INFORMATION GOVERNMENT

BOYLE ENGINEERING CORPORATION

NWP NACIMIENTO WATER PROJECT
San Luis Obispo County Flood Control & Water Conservation District

UNITS A1, F1 AND G2 TANKS
GENERAL
SCADA SYSTEM BLOCK DIAGRAM

DESIGNED: XL, BEB
DETAILED: TVL
CHECKED:
APPROVED:
DATE: 2/22/06
BV PROJECT NO. 137522
NWP PROJECT NO. 3000187.08
SPEC 02
G603
SHEET OF

FD137522
D137522

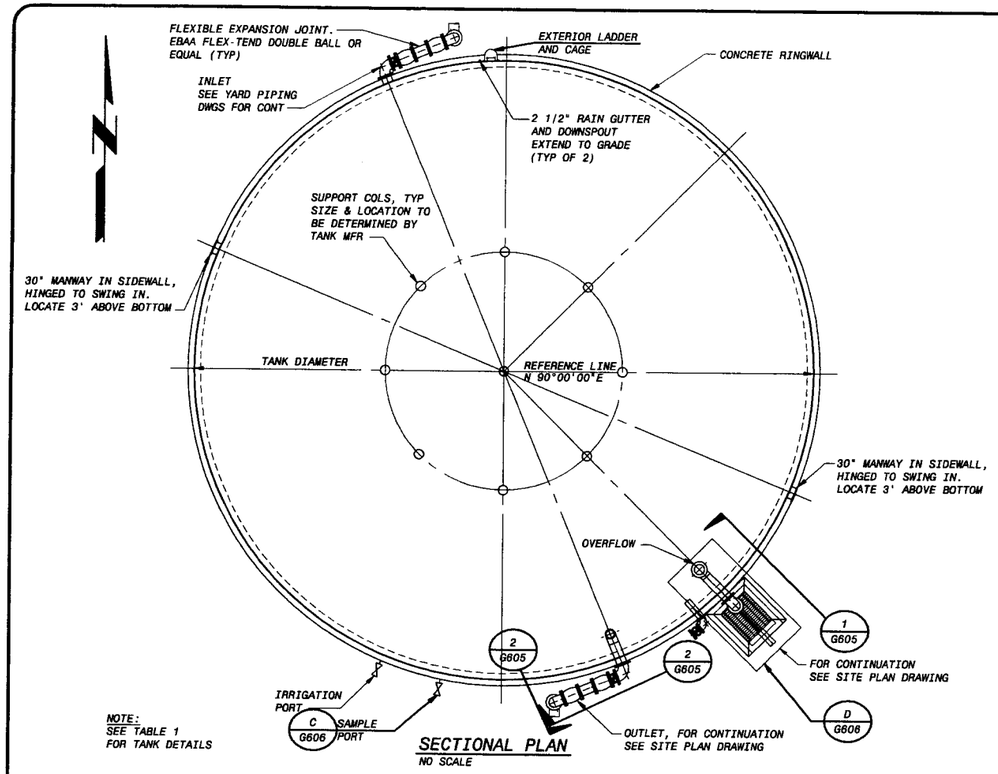

SECTIONAL PLAN
NO SCALE

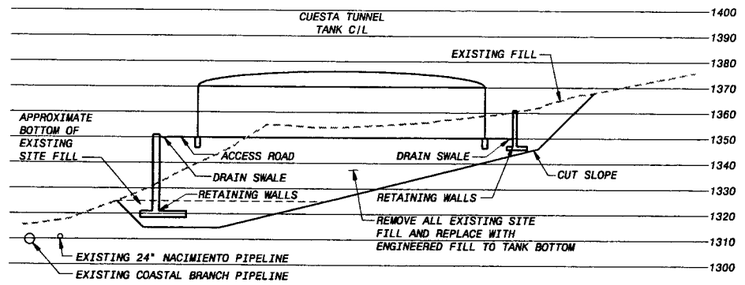

CUESTA TUNNEL TANK SECTION
1" = 30'-0" — 1 / G2-C101

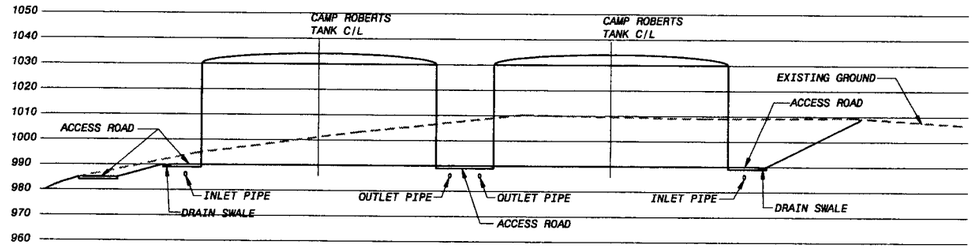

CAMP ROBERTS TANK SECTION
1" = 30'-0" — 2 / A1-C102

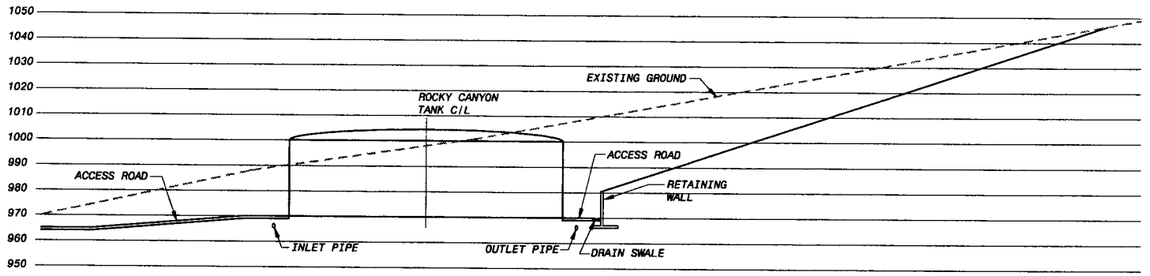

ROCKY CANYON TANK SECTION
1" = 30'-0" — 3 / F1-C102

TABLE 1 -TANK DETAILS

TANK NAME	TANK DIA	TANK HEIGHT	TANK INLET/OUTLET DIA	TANK OVERFLOW DIA	LEVEL TRANSMITTER DIA	TANK ROOF VENT DIA	TANK MANWAY DIA	SAMPLE PORT DIA	INLET/OUTLET LOCATION DEG*	OVERFLOW LOCATION DEG*	IRRIGATION PORT DEG*	ROOF VENT LOCATION	MANWAY LOCATION DEG*	SAMPLE PORT LOCATION DEG*	OVERFLOW ELEV	BOTTOM TANK ELEV
CAMP ROBERTS	92'	40'	30"	36"	TBD	48"	30"	TBD	335° / 155°	120° TANK 1 25° TANK 2	TBD	CENTERED ON TOP OF ROOF	TBD	TBD	1030'	990'
ROCKY CANYON	107'	30'	18"	24"	TBD	48"	30"	TBD	350° / 170°	270°	TBD	CENTERED ON TOP OF ROOF	TBD	TBD	1000'	970'
CUESTA TUNNEL	113'	20'	18"	24"	TBD	48"	30"	TBD	25° / 205°	45°	TBD	CENTERED ON TOP OF ROOF	55° /235°	20°	1370'	1350'

* ALL ANGLES MEASURED CLOCKWISE FROM NORTH

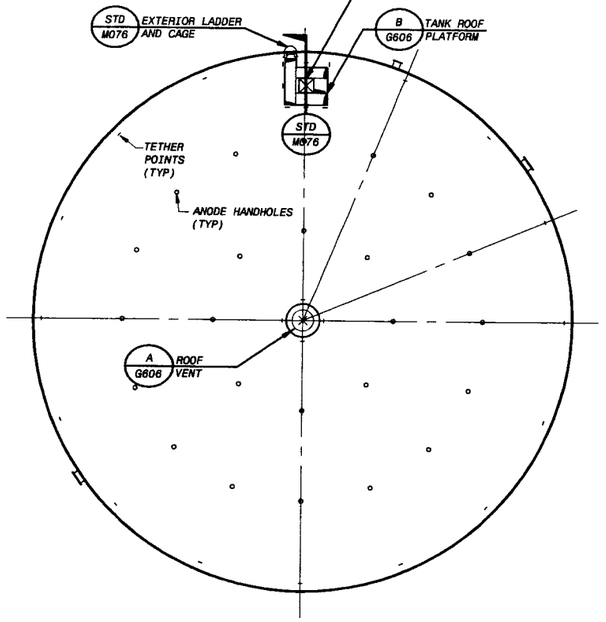

NOTE:
SEE TABLE 1
FOR TANK DETAILS

ROOF PLAN
NO SCALE

PRELIMINARY - NOT FOR CONSTRUCTION

IF THIS BAR DOES NOT MEASURE 1" THEN DRAWING IS NOT TO FULL SCALE

FD137522
D137522

NO.	BY:	CK.	APP	DATE	REVISIONS AND RECORD OF ISSUE

CYGNET ID: 137522-C-BP2-EOOOO81BH
WF: BP2_G604.dwg
SAVED: MCC10784, 2/17/2006 4:15:56 PM
PLOTTED: MCC10784, 2/17/2006 4:15:58 PM
USER: MCC10784

XREF1: G2_C_TANK.dwg
XREF2:
XREF3:
XREF4:
XREF5:
DWG VER: 1.17

BLACK & VEATCH building • world of difference™
ENERGY WATER INFORMATION GOVERNMENT
BOYLE ENGINEERING CORPORATION

NWP NACIMIENTO WATER PROJECT
San Luis Obispo County Flood Control & Water Conservation District

UNITS A1, F1, AND G2 TANKS
GENERAL
TANK PLANS AND SECTIONS

DESIGNED:	XL, BEB
DETAILED:	TVL
CHECKED:	
APPROVED:	
DATE:	2/22/06
BV PROJECT NO.	137522
NWP PROJECT NO.	3000187.08
SPEC	02
	G604
SHEET OF	

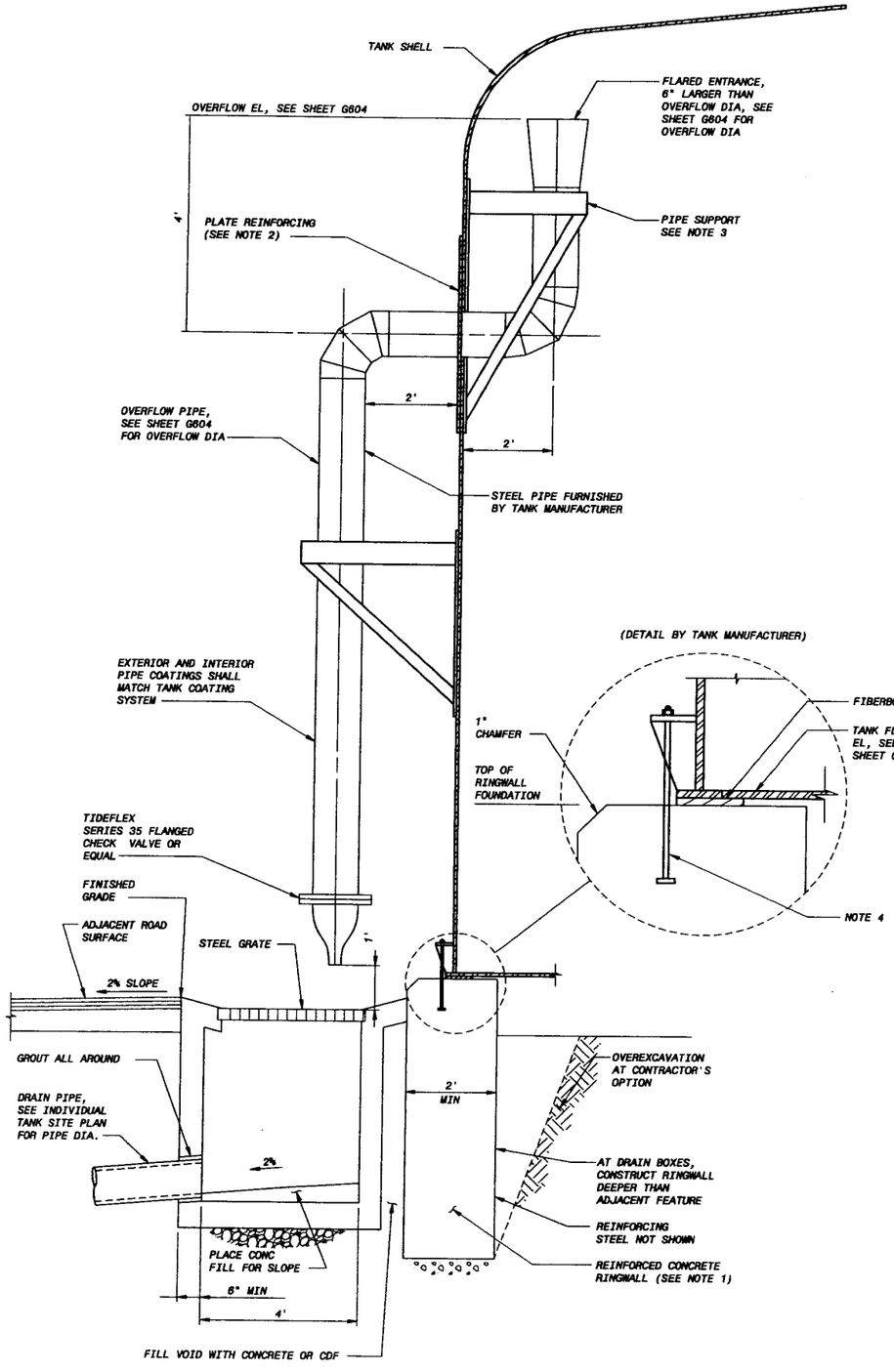

SECTION 1 / G604
NO SCALE

NOTE:
FOR RINGWALL CONSTRUCTION, CONTRACTOR HAS THE OPTION OF PLACING CONCRETE DIRECTLY AGAINST THE EXCAVATED SURFACE, OR SHALL FORM THE CONCRETE SURFACE THEN PLACE AND COMPACT STRUCTURAL BACKFILL BETWEEN THE FORMED SURFACE AND EXCAVATED SURFACE. RINGWALL DEPTH BY CONTRACTOR.

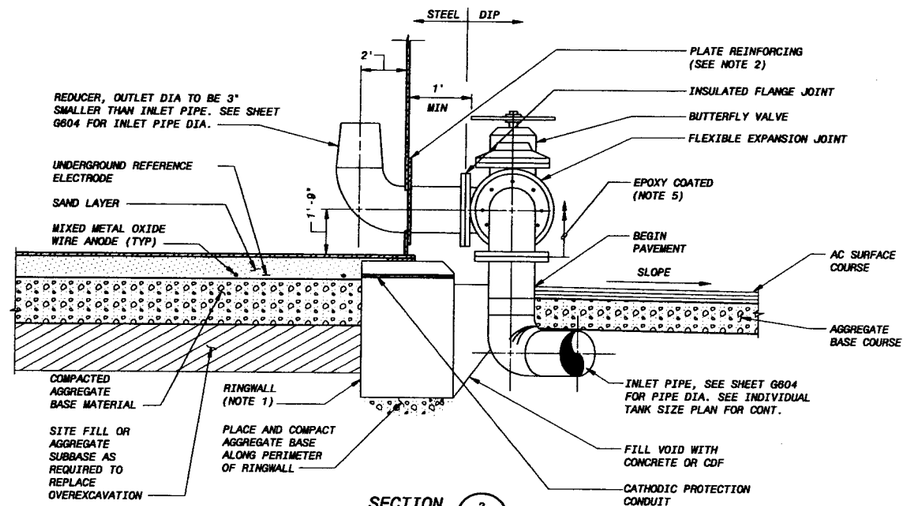

SECTION 2 / G604
NO SCALE

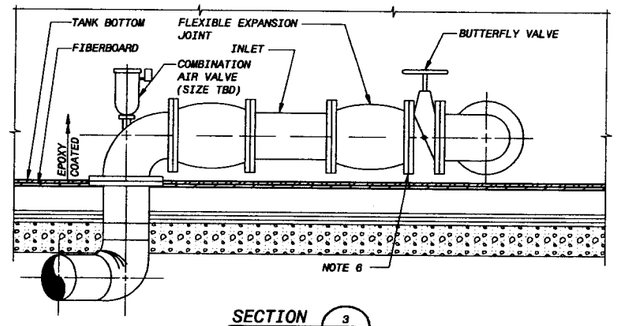

SECTION 3 / G604
NO SCALE

NOTES:

1. CONCRETE RINGWALL SHALL BE DESIGNED BY THE TANK MANUFACTURER AND SHALL EXTEND A MINIMUM DEPTH OF 3FT.
2. PLATE REINFORCEMENT THICKNESS SHALL BE AS PER TANK MANUFACTURER'S RECOMMENDATION.
3. PIPE SUPPORTS ON TANK SHALL BE DESIGNED AND FURNISHED BY TANK MANUFACTURER.
4. SIZE OF ANCHOR BOLTS, NUMBER OF ANCHORS AND MINIMUM EMBEDMENT SHALL BE DETERMINED BY TANK MANUFACTURER.
5. PIPE COATING SYSTEM SHALL MATCH EXTERIOR TANK COATING SYSTEM.
6. CONTRACTOR SHALL INSTALL FLEXIBLE EXPANSION JOINT IN ACCORDANCE WITH MANUFACTURER'S RECOMMENDATIONS. IF REQUIRED FOR PROPER OPERATION OF VALVE. CONTRACTOR MAY BE REQUIRED TO FURNISH SPOOL PIECE.

0 1/2 1
IF THIS BAR DOES NOT MEASURE 1" THEN DRAWING IS NOT TO FULL SCALE

NO.	BY	CK	APP	DATE	REVISIONS AND RECORD OF ISSUE

XREF1:
XREF2:
XREF3:
XREF4:
XREF5:

CADNET ID: 137522-C-BP2-E0000BAMS
W: BP2-0605.dwg
SAVED: MCC10784, 2/16/2006 2:45:31 PM
PLOTTED: GUT46281, 2/17/2006 3:50:32 PM
USER: GUT46281
DWG VER: 1.1

BLACK & VEATCH
building • world of difference™
ENERGY WATER INFORMATION GOVERNMENT

BOYLE
ENGINEERING CORPORATION

NWP NACIMIENTO WATER PROJECT
San Luis Obispo County Flood Control & Water Conservation District

UNITS A1, F1, AND G2 TANKS
TANK SECTIONS

DESIGNED:	XL
DETAILED:	TVL
CHECKED:	
APPROVED:	
DATE:	2/22/06
BV PROJECT NO.	137522
NWP PROJECT NO.	3000187.08
SPEC	02
	G605 SHEET OF

FD137522
D137522

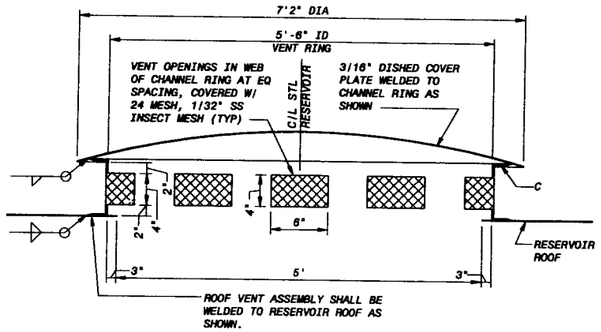

ROOF VENT DETAIL (A / G604)
NO SCALE

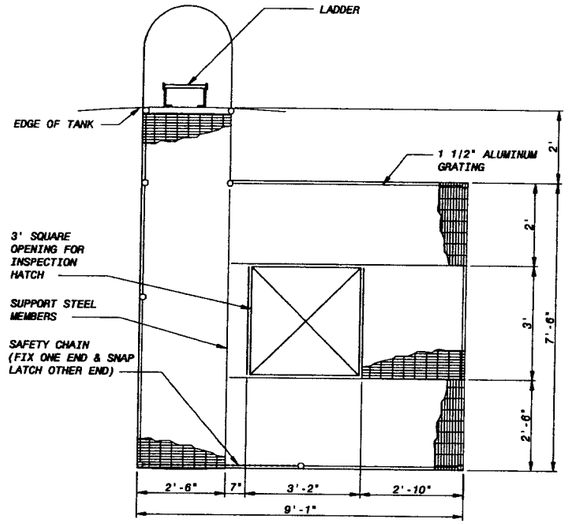

TANK ROOF PLATFORM (B / G604)
NO SCALE

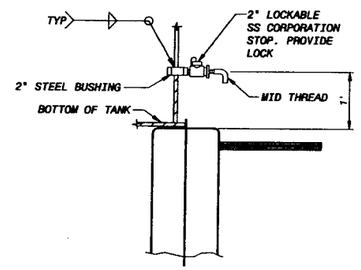

SAMPLE PORT (C / G604)
NO SCALE

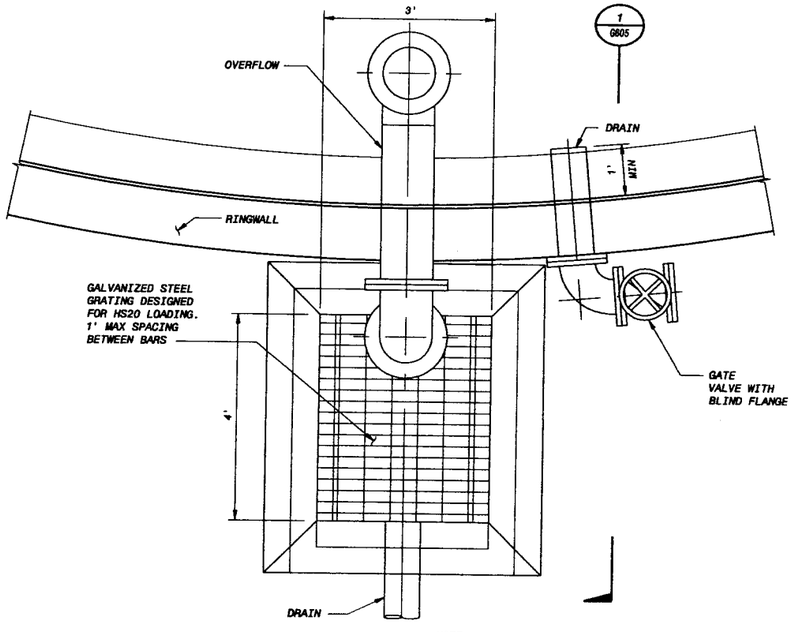

NOTE:

1. CONCRETE FILL SPACE BETWEEN DROP INLET AND RINGWALL.
2. SEE SHEET G604 FOR OVERFLOW AND DRAIN PIPE DIA.

TANK OVERFLOW AND DRAIN PIPING ENLARGEMENT (D / G604)
NO SCALE

0 1/2 1
IF THIS BAR DOES NOT MEASURE 1" THEN DRAWING IS NOT TO FULL SCALE

DATE	REVISIONS AND RECORD OF ISSUE	NO.	BY	CK	APP

CYGNET ID: 137522-C-BP2-E000084V1
WF: BP2-G606.dwg
SAVED: MCC10764, 2/16/2006 2:46:40 PM
PLOTTED: GUT45251, 2/17/2006 3:50:59 PM
USER: GUT45251
DWG VER: 1.1
XREF1:
XREF2:
XREF3:
XREF4:
XREF5:

BLACK & VEATCH
building a world of difference™
ENERGY WATER INFORMATION GOVERNMENT

BOYLE ENGINEERING CORPORATION

NWP NACIMIENTO WATER PROJECT
San Luis Obispo County Flood Control & Water Conservation District

UNITS A1, F1, AND G2 TANKS
TANK DETAILS

DESIGNED: XL
DETAILED: TVL
CHECKED:
APPROVED:
DATE: 2/22/06
BV PROJECT NO. 137522
NWP PROJECT NO. 3000187.08
SPEC 02
G606
SHEET OF

FD137522
D137522

GATE #10 BARRIER (RELOCATE FROM SAN MARCOS ROAD)

FIRE BREAK TRAIL

30" PUMP TEST LOOP

OVERFLOW

STORM WATER AND TANK OVERFLOW DETENTION BASIN (SIZE & LOCATION TBD)

CAMP ROBERTS PUMP STATION

OIL WATER SEPARATOR

CAMP ROBERTS TANK 1

CAMP ROBERTS TANK 2

CATCH BASIN

TRANSFORMER

APPROX. STA. 632+08

GENERALS ROAD

027401031

027401035

026021010

NOTE 1

NOTES:

1. INSTALL NEW FENCING ALONG GENERALS ROAD FROM EXISTING GATE #10 SAN MARCOS ROAD TO CAMP ROBERTS PUMP STATION ENTRANCE. GATE #10 WILL BE RELOCATED SUBSEQUENTLY.
2. REMOVE TREES AND BUSHES AS REQUIRED FOR CONSTRUCTION.

PRELIMINARY - NOT FOR CONSTRUCTION

40' 20' 0 40' 80'
1"=40'

0 1/2 1
IF THIS BAR DOES NOT MEASURE 1" THEN DRAWING IS NOT TO FULL SCALE

NO.	BY	CK	APP

REVISIONS AND RECORD OF ISSUE

DATE	
CYGNET ID: 137322-C-BP2-E00007WLL	XREF1: BP1_C-HALN01.dwg
WF: BP2-A1-C101.dwg	XREF2: BP1_C-CNTY-PARC.dwg
SAVED: MCC10764, 2/16/2006 4:39:15 PM	XREF3: C-TOPO10.dwg
PLOTTED: MCC10764, 2/16/2006 4:39:32 PM	XREF4: A1-C_TANK.dwg
USER: MCC10764	XREF5: B-W-PIPE.dwg
	DWG VER: 1.26

BLACK & VEATCH
building a world of difference

ENERGY WATER INFORMATION GOVERNMENT

BOYLE ENGINEERING CORPORATION

NWP NACIMIENTO WATER PROJECT
San Luis Obispo County Flood Control & Water Conservation District

UNIT A1 - CAMP ROBERTS TANK CIVIL SITE PLAN

DESIGNED:	BEB, VT
DETAILED:	TVL, JLK
CHECKED:	
APPROVED:	
DATE:	2/22/06
BV PROJECT NO.	137522
NWP PROJECT NO.	3000187.08
SPEC	02
	A1-C101
SHEET OF	

F0137522
D137522

GATE #10 BARRIER (RELOCATE FROM SAN MARCOS ROAD)

15' W ACCESS ROAD

ENTRANCE

NACIMIENTO 30-INCH PIPELINE

7401031

027401035

026021010

APPROX. STA. 532+08

30" PUMP TEST LOOP

30" DISCHARGE

FIRE BREAK TRAIL

30" DISCHARGE

OVERFLOW

30" HEADER

TRANSFORMER

BYPASS FOR GRAVITY OPERATION

STORM WATER AND TANK OVERFLOW DETENTION BASIN (SIZE & LOCATION TBD)

DRIVE ACCESS FOR 50' TRUCK EL 940.0

CAMP ROBERTS PUMP STATION

OIL WATER SEPARATOR

GENERALS ROAD

NOTE 1

ENTRANCE

20' W ACCESS ROAD

30' TANK INLET

36" TANK OUTLET/ PS SUCTION INLET

DRAINAGE DISCHARGE PIPET

CATCH BASIN

OVERFLOW DRAIN (TYP)

CAMP ROBERTS TANK 1
FF = 990'
N 2453544.39
E 5740286.22

CAMP ROBERTS TANK 2
FF = 990'
N 2543436.93
E 5740335.50

NOTES:

1. INSTALL NEW FENCING ALONG GENERALS ROAD FROM EXISTING GATE #10 SAN MARCOS ROAD TO CAMP ROBERTS PUMP STATION ENTRANCE. GATE #10 WILL BE RELOCATED SUBSEQUENTLY.
2. REMOVE TREES AND BUSHES AS REQUIRED FOR CONSTRUCTION.

PRELIMINARY - NOT FOR CONSTRUCTION

40' 20' 0 40' 80'
1"=40'

0 1/2 1
IF THIS BAR DOES NOT MEASURE 1" THEN DRAWING IS NOT TO FULL SCALE

NO.	BY	CK	APP	REVISIONS AND RECORD OF ISSUE	DATE
				XREF1:BP1-C-HALM01.dwg	
				XREF2:BP1-C-CNT7-PARC.dwg	
				XREF3:C-TOPO10.dwg	
				XREF4:A1-C-TANK.dwg	
				XREF5:B-S-FLOR.dwg	

CYGNET ID: 137522-C-BP2-E000077GM
WF: BP2_A1-C102.dwg
SAVED: MCC10784, 2/20/2008 9:15:05 AM
PLOTTED: MCC10784, 2/20/2008 9:15:15 AM
USER: MCC10784 DWG VER: 1.19

BLACK & VEATCH building • world of difference™
ENERGY WATER INFRASTRUCTURE GOVERNMENT

BOYLE ENGINEERING CORPORATION

NWP NACIMIENTO WATER PROJECT
San Luis Obispo County Flood Control & Water Conservation District

UNIT A1 - CAMP ROBERTS TANK
CIVIL
GRADING AND PAVING PLAN

DESIGNED:	BEB, VT
DETAILED:	TVL, JLK
CHECKED:	
APPROVED:	
DATE:	2/22/08
BV PROJECT NO.	137522
NWP PROJECT NO.	3000187.08
SPEC	02
SHEET	A1-C102
OF	

FD137522
D137522

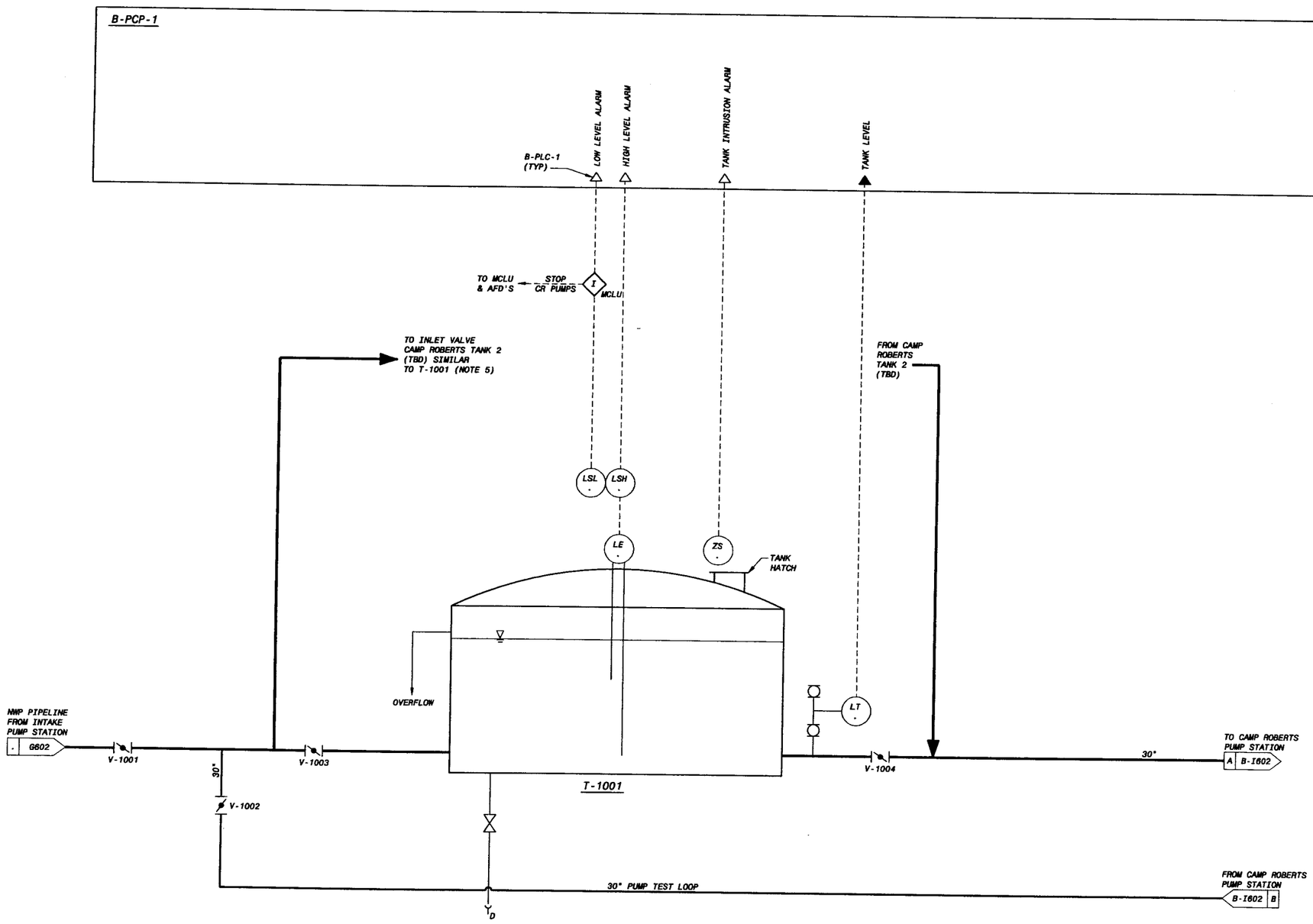

NOTES:

1. SEE STD-G008 THROUGH STD-022 FOR LEGEND.
2. UNIT CODE IS "A1" UNLESS OTHERWISE NOTED.
3. FOR DRAWING CLARITY, VALVE TAG NUMBERS ONLY SHOW THE SEQUENCE NUMBER UNLESS NOTED OTHERWISE.
4. LOCAL CONTROL DEVICES SUCH AS INDICATING LIGHTS AND SWITCHES LOCATED ON MCC'S MAY NOT BE INDICATED ON THIS P&ID.
5. VALVE NUMBERS FOR TANK 2 START WITH V-2001, THESE VALVE NUMBERS ARE SIMILAR TO TANK 1 VALVE NUMBERS.

PRELIMINARY - NOT FOR CONSTRUCTION

0 1/2 1
IF THIS BAR DOES NOT MEASURE 1" THEN DRAWING IS NOT TO FULL SCALE

DATE	REVISIONS AND RECORD OF ISSUE	NO.	BY	CK	APP

CYGNET ID: 137522-I-BP2-E0000TWZH
WF: BP2-A1-I601.dwg
SAVED: WAG13008, 2/14/2006 2:14:47 PM
PLOTTED: GUT45251, 2/17/2006 3:53:42 PM
USER: GUT45251
DWG VER: 1.11
XREF1:
XREF2:
XREF3:
XREF4:
XREF5:

BLACK & VEATCH
building a world of difference™
ENERGY WATER INFORMATION GOVERNMENT

BOYLE ENGINEERING CORPORATION

NWP NACIMIENTO WATER PROJECT
San Luis Obispo County Flood Control & Water Conservation District

UNIT A1 - CAMP ROBERTS TANK
P&ID
TANK

DESIGNED: WEM
DETAILED: DSW
CHECKED:
APPROVED:
DATE: 2/22/06
BV PROJECT NO. 137522
NWP PROJECT NO. 3000187.08
SPEC 02
A1-I601
SHEET
OF

FD137522
D137522

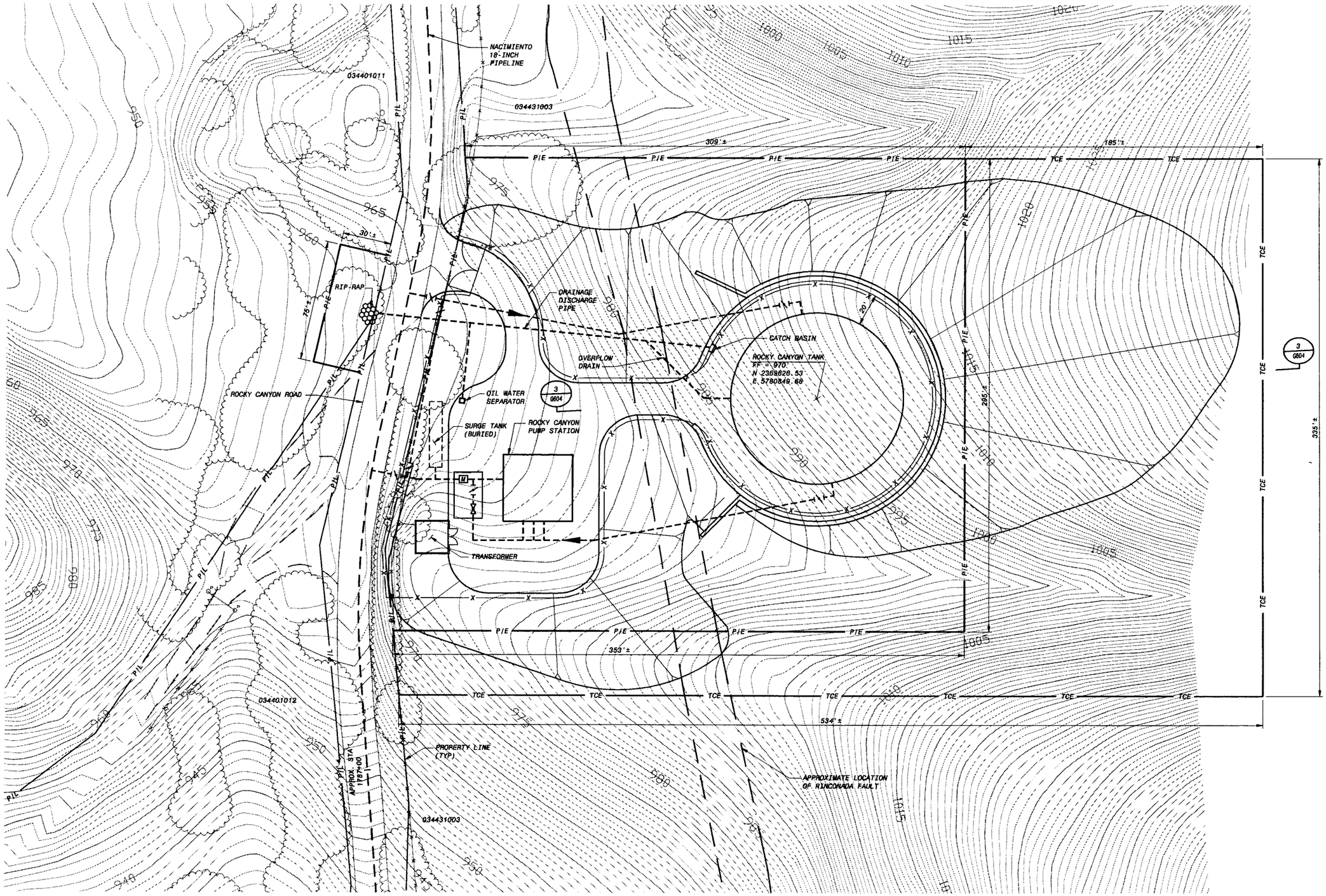

NOTES:

1. PROTECT EXISTING FENCE DURING CONSTRUCTION. ONCE CONSTRUCTION IS COMPLETE, REPLACE EXISTING FENCE WITH NEW FENCE.
2. REMOVE TREES AND BUSHES AS REQUIRED FOR CONSTRUCTION.

PRELIMINARY - NOT FOR CONSTRUCTION

30' 20' 10' 0 30' 60'
1"=30'

0 1/2 1
IF THIS BAR DOES NOT MEASURE 1" THEN DRAWING IS NOT TO FULL SCALE

NO.	BY	CK	APP	DATE	REVISIONS AND RECORD OF ISSUE
					XREF1:C-TOPO1.dwg
					XREF2:F1-C-TANK.dwg
					XREF3:BP6-C-HALM01.dwg
					XREF4:BP6-C-PARC.dwg
					XREF5:BP7-C-HALM01.dwg

CYGNET ID: 137522-C-BP2-E000070GJ
WF: BP2-F1-C101.dwg
SAVED: MCC10784, 2/20/2006 9:16:23 AM
PLOTTED: MCC10784, 2/20/2006 9:16:26 AM
USER: MCC10784 DWG VER: 1.19

BLACK & VEATCH
building • world of difference"
ENERGY WATER INFORMATION GOVERNMENT

BOYLE
ENGINEERING CORPORATION

NWP NACIMIENTO WATER PROJECT
San Luis Obispo County Flood Control & Water Conservation District

UNIT F1 - ROCKY CANYON TANK
CIVIL
SITE PLAN

DESIGNED:	BEB, VT
DETAILED:	TVL, JLK
CHECKED:	
APPROVED:	
DATE:	2/22/06
BV PROJECT NO.	137522
NWP PROJECT NO.	3000187.08
SPEC	02
	F1-C101
SHEET OF	

FD137522
D137522

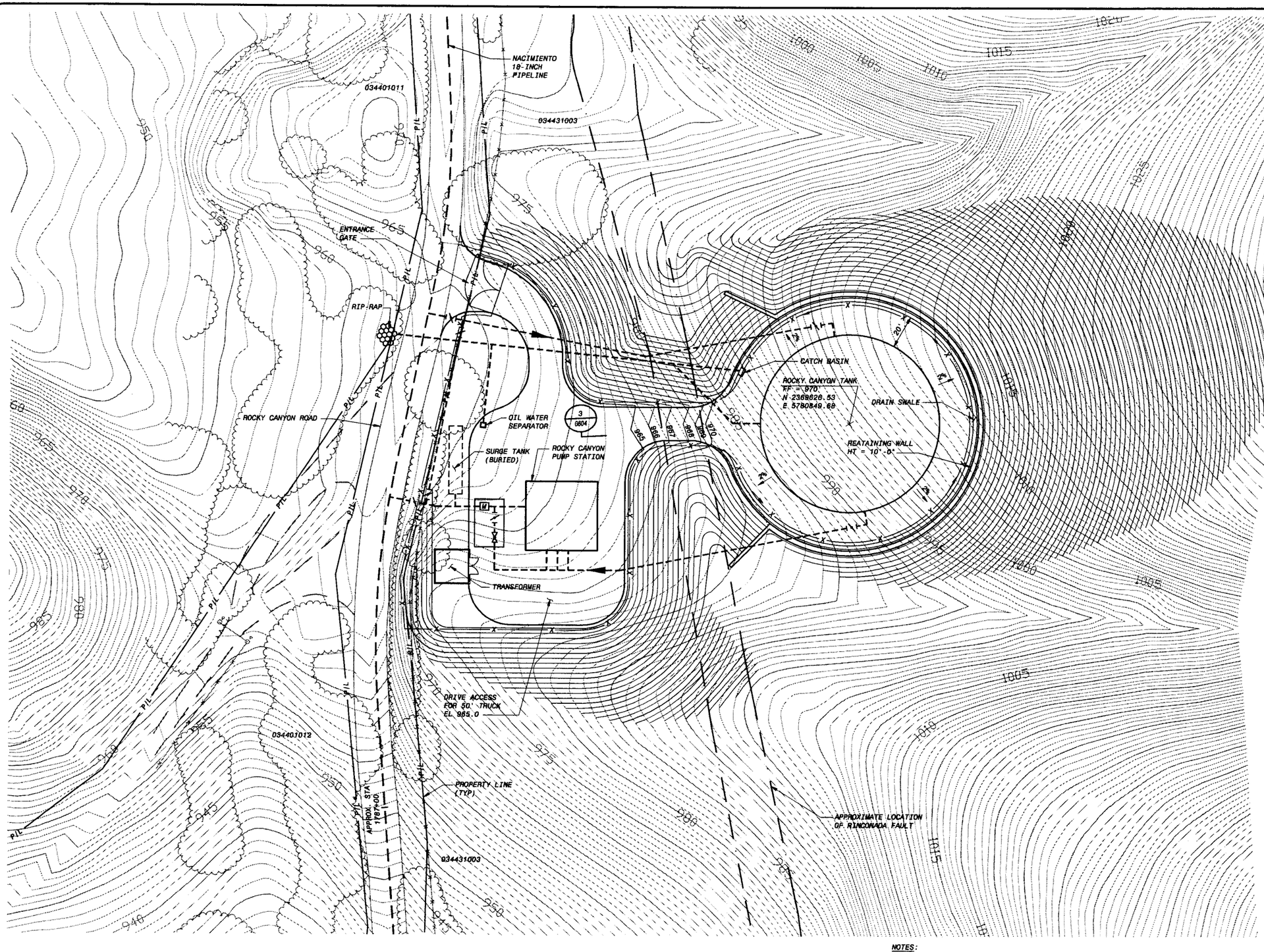

3 / G804

NOTES:

1. PROTECT EXISTING FENCE DURING CONSTRUCTION. ONCE CONSTRUCTION IS COMPLETE, REPLACE EXISTING FENCE WITH NEW FENCE.
2. REMOVE TREES AND BUSHES AS REQUIRED FOR CONSTRUCTION.

PRELIMINARY - NOT FOR CONSTRUCTION

30' 20' 10' 0 30' 60'
1"=30'

0 1/2 1
IF THIS BAR DOES NOT MEASURE 1" THEN DRAWING IS NOT TO FULL SCALE

NO.	BY	CK	APP	DATE	REVISIONS AND RECORD OF ISSUE

CYGNET ID: 137322.C.BP2-E00007YK7
WF: BP2-F1-C102.DWG
SAVED: MCC10784, 2/20/2006 8:17:03 AM
PLOTTED: MCC10784, 2/20/2006 8:17:05 AM
USER: MCC10784

XREF1: C_TOPO31.DWG
XREF2: F1-C-TANK.DWG
XREF3: BP6-C-HALN01.DWG
XREF4: BP6-C-PARC.DWG
XREF5: BP7-C-HALN01.DWG
DWG VER: 1.15

BLACK & VEATCH building • world of difference
ENERGY WATER INFORMATION GOVERNMENT

BOYLE ENGINEERING CORPORATION

NWP NACIMIENTO WATER PROJECT
San Luis Obispo County Flood Control & Water Conservation District

UNIT F1 - ROCKY CANYON TANK
CIVIL
GRADING AND PAVING PLAN

DESIGNED:	BEB, VT
DETAILED:	TVL, JLK
CHECKED:	
APPROVED:	
DATE:	2/22/06
BV PROJECT NO.	137522
NWP PROJECT NO.	3000187.08
SPEC	02
	F1-C102
SHEET OF	

FD137522
D137522

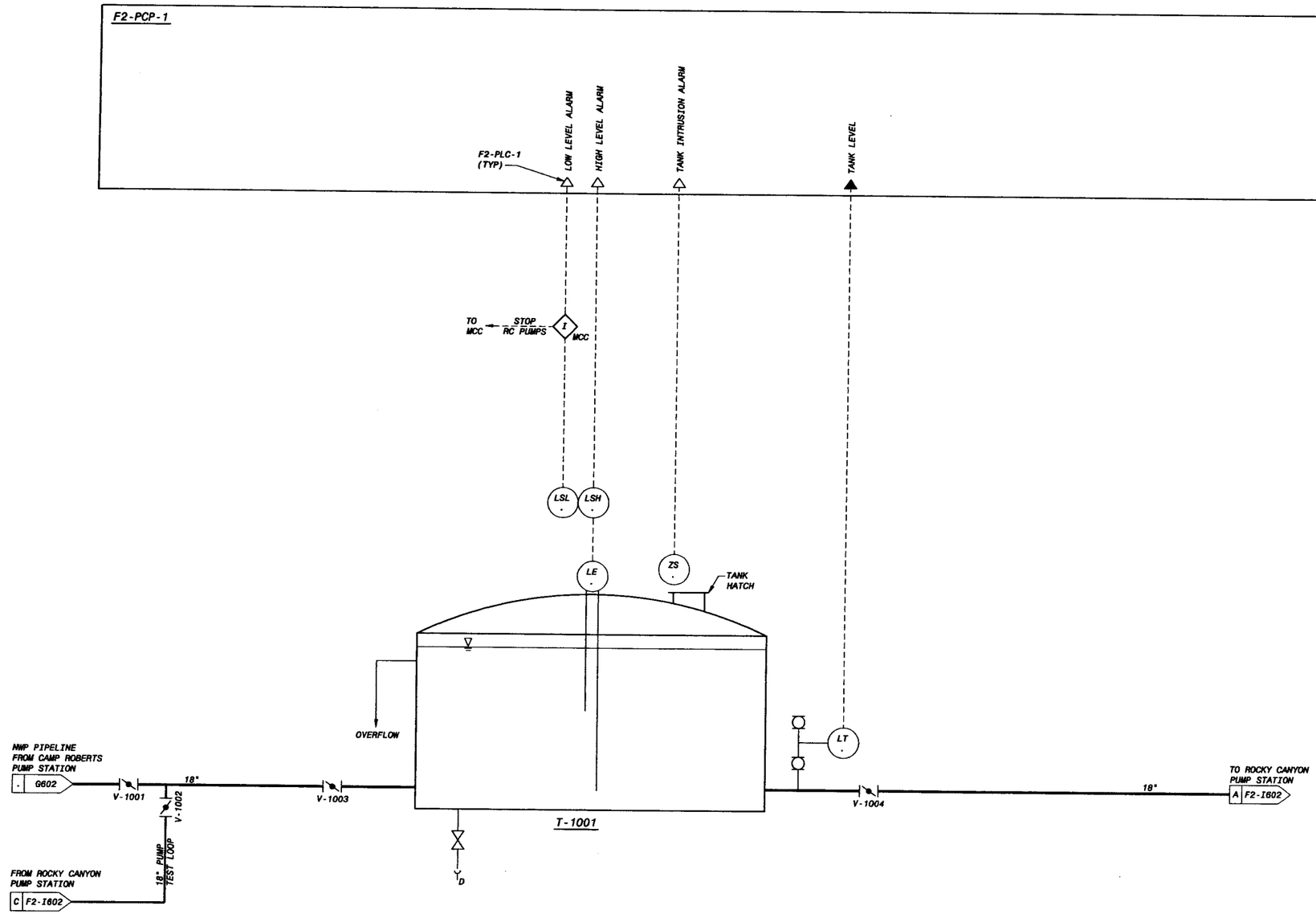

NOTES:

1. SEE STD-G008 THROUGH STD-022 FOR LEGEND.
2. UNIT CODE IS "F1" UNLESS OTHERWISE NOTED.
3. FOR DRAWING CLARITY, VALVE TAG NUMBERS ONLY SHOW THE SEQUENCE NUMBER UNLESS NOTED OTHERWISE.
4. LOCAL CONTROL DEVICES SUCH AS INDICATING LIGHTS AND SWITCHES LOCATED ON MCC'S MAY NOT BE INDICATED ON THIS P&ID.

PRELIMINARY - NOT FOR CONSTRUCTION

0 1/2 1
IF THIS BAR DOES NOT MEASURE 1" THEN DRAWING IS NOT TO FULL SCALE

DATE	REVISIONS AND RECORD OF ISSUE	NO.	BY	CK	APP

CYGNET ID: 137522-I-BP2-E00007ZXW
WF: BP2-F1-I601.dwg
SAVED: MAG13008, 2/17/2006 11:05:57 AM
PLOTTED: GUT45251, 2/17/2006 3:54:42 PM
USER: GUT45251
DWG VER: 1.11
XREF1:
XREF2:
XREF3:
XREF4:
XREF5:

BLACK & VEATCH
building a world of difference™
ENERGY WATER INFORMATION GOVERNMENT

BOYLE ENGINEERING CORPORATION

NWP NACIMIENTO WATER PROJECT
San Luis Obispo County Flood Control & Water Conservation District

UNIT F1 - ROCKY CANYON TANK
P&ID
TANK

DESIGNED: WEM
DETAILED: DSW
CHECKED:
APPROVED:
DATE: 2/22/06
BV PROJECT NO. 137522
NWP PROJECT NO. 3000187.08
SPEC 02
F1-I601
SHEET
OF

FD137522
D137522

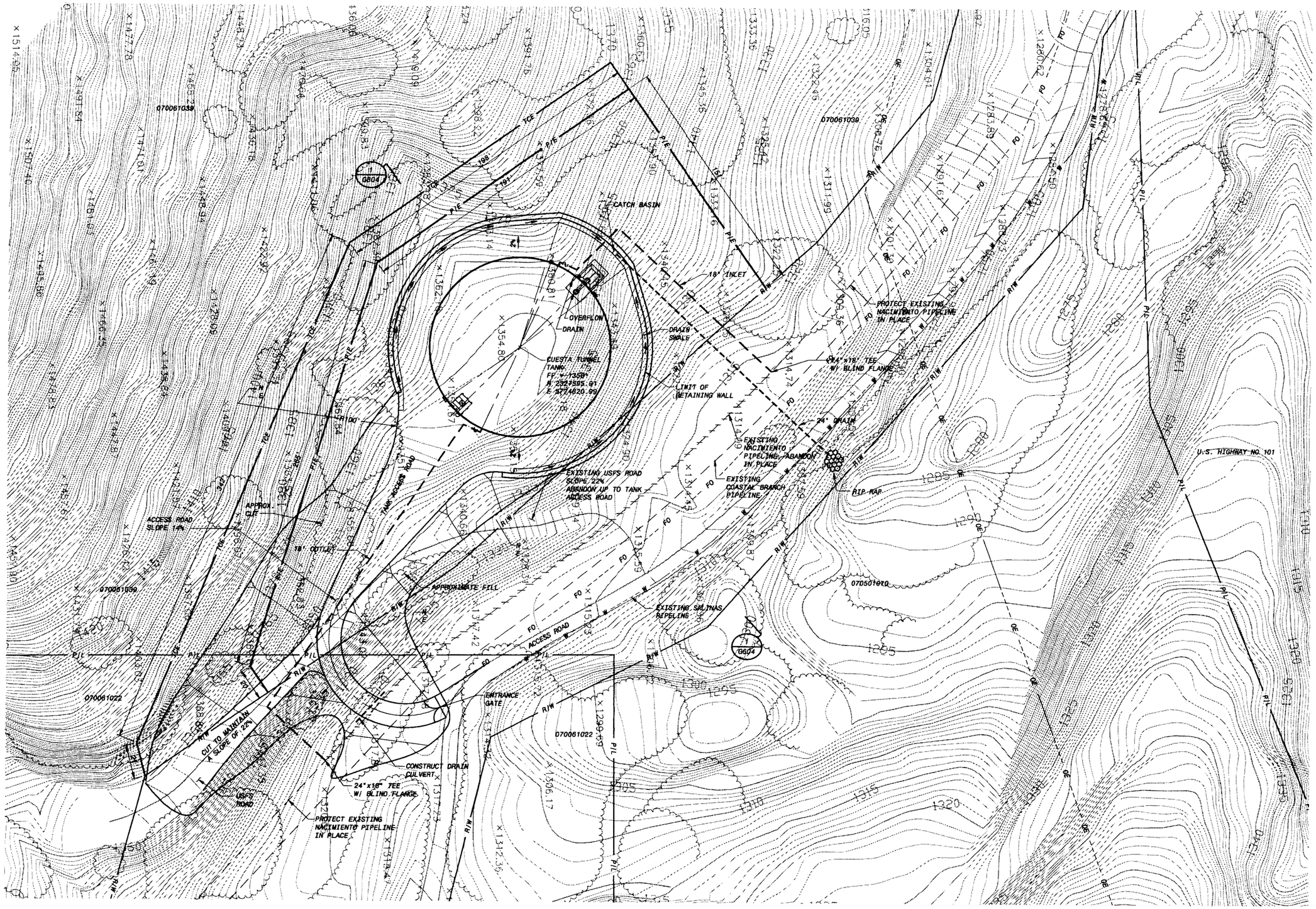

PRELIMINARY - NOT FOR CONSTRUCTION

30' 20' 10' 0 30' 60'
1"=30'

0 1/2 1
IF THIS BAR DOES NOT MEASURE 1" THEN DRAWING IS NOT TO FULL SCALE

DATE	REVISIONS AND RECORD OF ISSUE	NO.	BY	CK	APP

CYGNET ID: 137522-C-BP2-E00007WWB
WF: BP2-G2-C101.dwg
SAVED: MCC10764, 2/17/2006 4:06:42 PM
PLOTTED: MCC10764, 2/17/2006 4:06:56 PM
USER: MCC10764
DWG VER: 1.13
XREF1: G2-CNTY-PARC.dwg
XREF2: C-TOPO40.dwg
XREF3: G2-C-TANK.dwg
XREF4:
XREF5:

BLACK & VEATCH
building a world of difference™
ENERGY WATER INFORMATION GOVERNMENT

BOYLE ENGINEERING CORPORATION

NWP NACIMIENTO WATER PROJECT
San Luis Obispo County Flood Control & Water Conservation District

UNIT G2 - CUESTA TUNNEL TANK
CIVIL
SITE PLAN

DESIGNED: XL
DETAILED: RV
CHECKED:
APPROVED:
DATE: 2/22/06

BV PROJECT NO.
137522

NWP PROJECT NO.
3000187.08

SPEC
02

G2-C101
SHEET
OF

FD137522
D137522

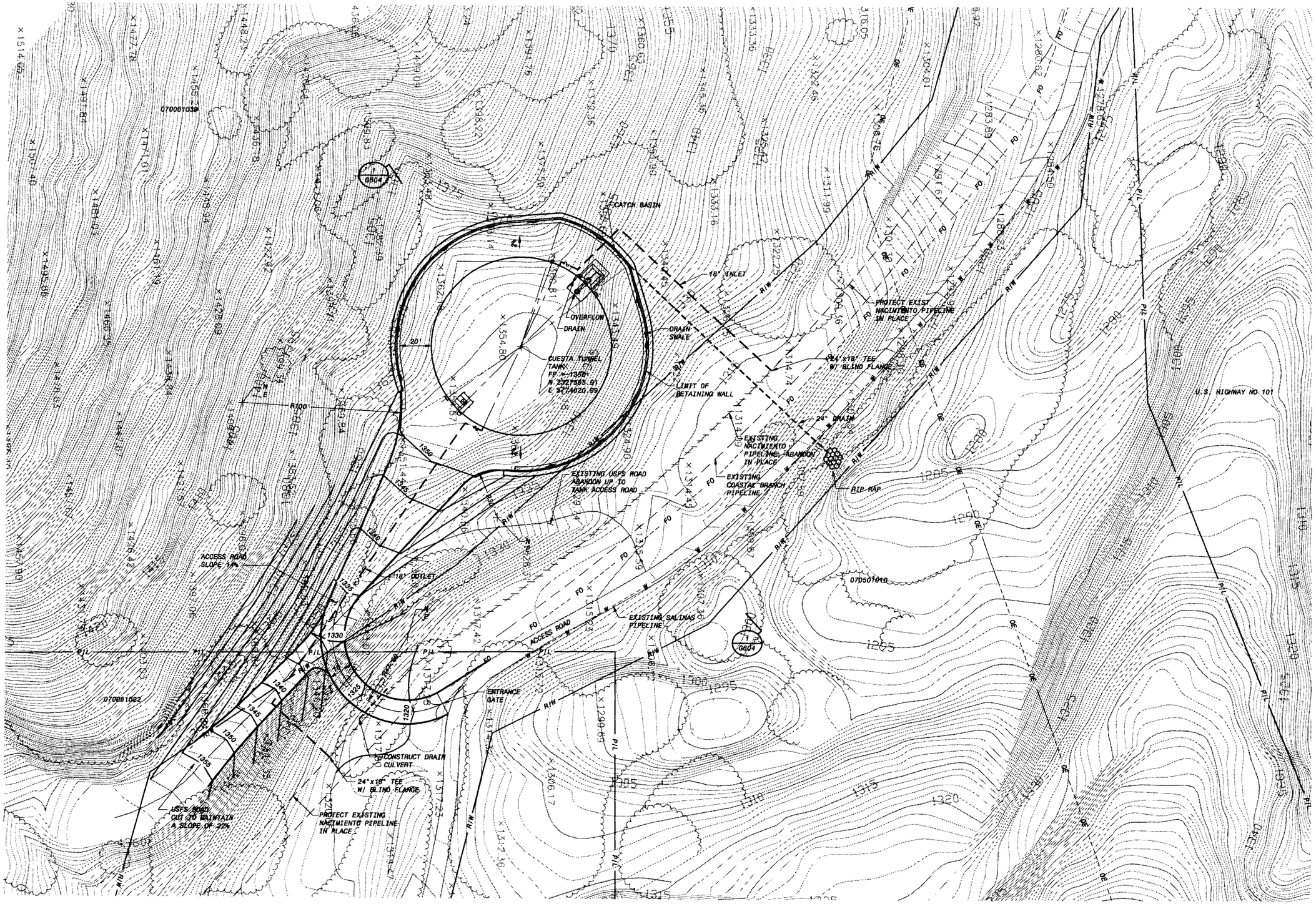

PRELIMINARY - NOT FOR CONSTRUCTION

30' 20' 10' 0 30' 60'
1"=30'

0 1/2 1
IF THIS BAR DOES NOT MEASURE 1" THEN DRAWING IS NOT TO FULL SCALE

DATE	REVISIONS AND RECORD OF ISSUE	NO.	BY	CK	APP

CYGNET ID: 137522-C-BP2-E00007YGH
WF: BP2-G2-C102.dwg
SAVED: MCC10764, 2/17/2006 4:08:38 PM
PLOTTED: MCC10764, 2/17/2006 4:08:39 PM
USER: MCC10764
DWG VER: 1.10
XREF1: G2-CNTY-PARC.dwg
XREF2: C-TOPO40.dwg
XREF3: G2-C-TANK.dwg
XREF4:
XREF5:

BLACK & VEATCH
building a world of difference™
ENERGY WATER INFORMATION GOVERNMENT

BOYLE ENGINEERING CORPORATION

NWP NACIMIENTO WATER PROJECT
San Luis Obispo County Flood Control & Water Conservation District

UNIT G2 - CUESTA TUNNEL TANK
CIVIL
GRADING AND PAVING PLAN

DESIGNED: XL
DETAILED: RV
CHECKED:
APPROVED:
DATE: 2/22/06
BV PROJECT NO. 137522
NWP PROJECT NO. 3000187.08
SPEC 02
G2-C102
SHEET
OF

FD137522
D137522

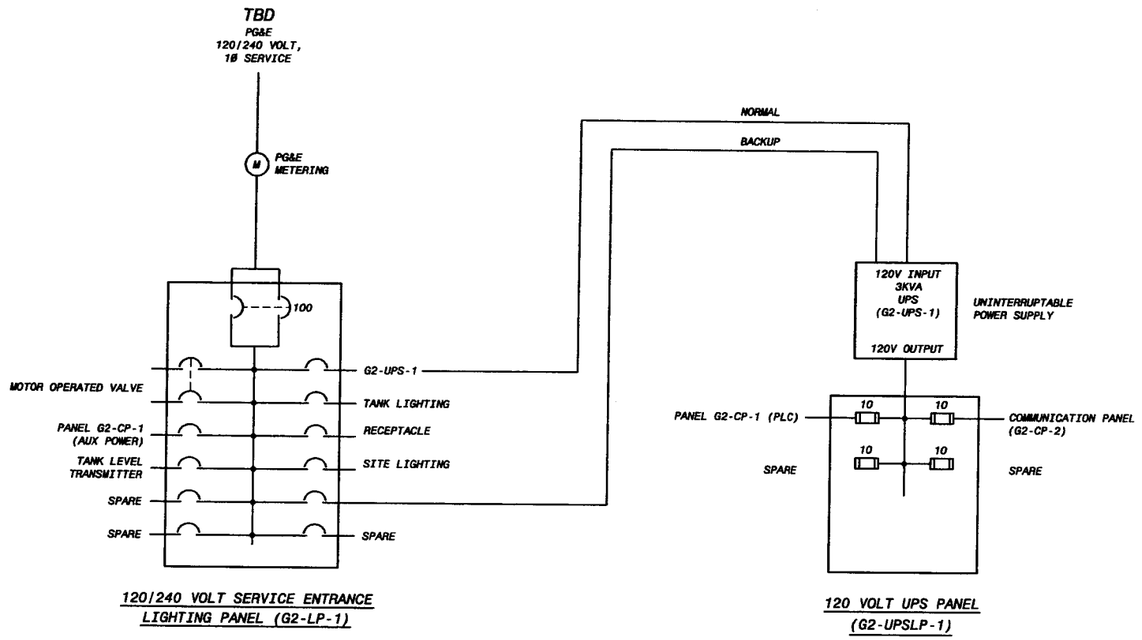

120/240 VOLT SERVICE ENTRANCE
LIGHTING PANEL (G2-LP-1)

120 VOLT UPS PANEL
(G2-UPSLP-1)

CUESTA TUNNEL TANK
ONE-LINE DIAGRAM
NO SCALE

NOTES:

1. SEE STD-G023 THROUGH STD-G032 FOR LEGEND.

LEGEND:

TBD TO BE DETERMINED

PRELIMINARY - NOT FOR CONSTRUCTION

0 1/2 1
IF THIS BAR DOES NOT MEASURE 1" THEN DRAWING IS NOT TO FULL SCALE

DATE	REVISIONS AND RECORD OF ISSUE	NO.	BY	CK	APP

CYGNET ID: 137522-E-BP2-E0000814M
WF: BP2-G2-E601.dwg
SAVED: MCC10764, 1/23/2006 1:55:34 PM
PLOTTED: GUT45251, 2/17/2006 3:55:28 PM
USER: GUT45251
DWG VER: 1.6
XREF1:
XREF2:
XREF3:
XREF4:
XREF5:

BLACK & VEATCH
building a world of difference™
ENERGY WATER INFORMATION GOVERNMENT

BOYLE
ENGINEERING CORPORATION

NWP NACIMIENTO WATER PROJECT

UNIT G2 - CUESTA TUNNEL TANK
ELECTRICAL
MAIN ONE-LINE DIAGRAM

DESIGNED: JJW
DETAILED: JCP
CHECKED:
APPROVED:
DATE: 2/22/06
BV PROJECT NO. 137522
NWP PROJECT NO. 3000187.08
SPEC 02
G2-E601
SHEET OF

FD137522
D137522

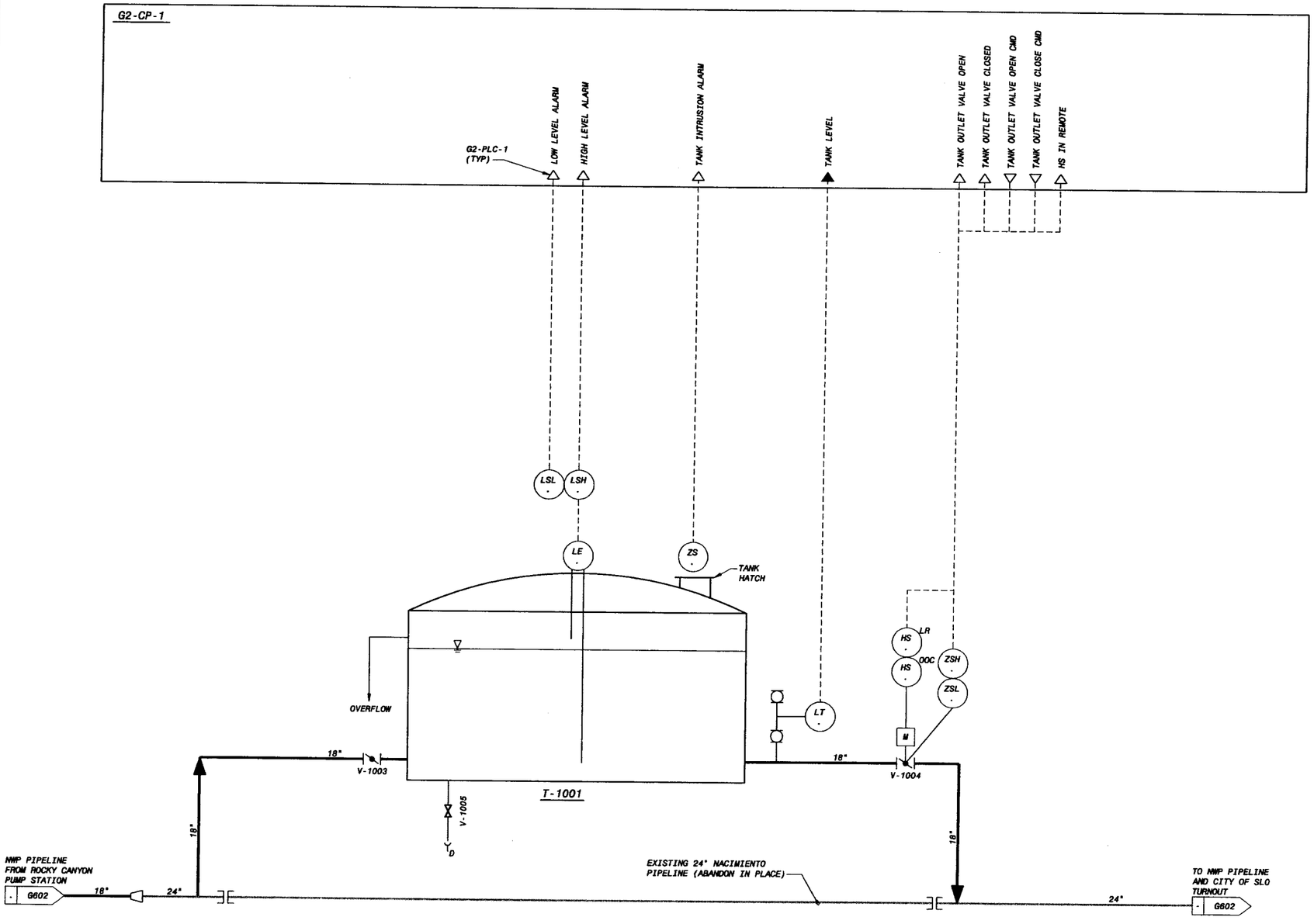

NOTES:

1. SEE STD-G008 THROUGH STD-022 FOR LEGEND.
2. UNIT CODE IS "G2" UNLESS OTHERWISE NOTED.
3. FOR DRAWING CLARITY, VALVE TAG NUMBERS ONLY SHOW THE SEQUENCE NUMBER UNLESS NOTED OTHERWISE.
4. LOCAL CONTROL DEVICES SUCH AS INDICATING LIGHTS AND SWITCHES LOCATED ON MCC'S MAY NOT BE INDICATED ON THIS P&ID.

NO.	BY	CK	APP	DATE	REVISIONS AND RECORD OF ISSUE

CRDWGT ID: 137522-I-BP2-E000G140 XREF1:
W:\BP2-G2-I601.dwg XREF2:
SAVED: WAGTSOOO, 2/14/2006 2:25:59 PM XREF3:
PLOTTED: GUTA9251, 2/17/2006 3:05:15 PM XREF4:
USER: GUTA9251 DWG VER: 1.12 XREF5:

BLACK & VEATCH building a world of difference™
ENERGY WATER INFORMATION GOVERNMENT
BOYLE ENGINEERING CORPORATION

NWP NACIMIENTO WATER PROJECT
Joint Lab Changes Project Proud Partners to Water Conservation & Education

UNIT G2 - CUESTA TUNNEL TANK
P&ID
TANK

DESIGNED:	WEW
DETAILED:	DSW
CHECKED:	
APPROVED:	
DATE:	2/22/06
BV PROJECT NO.	137522
NWP PROJECT NO.	3000187.08
SPEC	02
	G2-I601
SHEET	OF

PRELIMINARY - NOT FOR CONSTRUCTION

0 1/2 1
IF THIS BAR DOES NOT MEASURE 1" THEN DRAWING IS NOT TO FULL SCALE

FD137522
D137522