County of San Luis Obispo
GENERAL SERVICES AGENCY
Janette D. Pell, Director

Helen McCann, Department Administrator

REQUEST FOR PROPOSAL PS- #1102
LOPEZ 18" PIPELINE CLEANING PROJECT

October 6, 2010

The San Luis Obispo County Flood Control and Water Conservation District (District) is currently soliciting proposals for professional services for Lopez 18" Pipeline Cleaning Project

Each proposal shall specify each and every item as set forth in the attached specifications and Scope and Conditions of Work. Any and all exceptions must be clearly stated in the proposal. Failure to set forth any item in the specifications without taking exception may be grounds for rejection. The District reserves the right to reject any and all proposals and to waive any irregularity or informality in any proposal or in the Request for Proposal process, as long as, in the judgment of the District, such action will not negate fair competition and will permit proper comparative evaluation of the proposals submitted.

This Request for Proposal is posted on San Luis Obispo County's Purchasing website at http://www.slocounty.ca.gov/GSA/Purchasing/Current_Formal_Bids_and_Proposals.htm. Any changes, additions, or deletions to this Request for Proposal will be in the form of written addenda issued by the District. Any addenda will be posted on the website. Prospective proposers must check the website for addenda or other relevant new information during the response period. The District is not responsible for the failure of any prospective proposer to receive such addenda. All addenda so issued shall become a part of this Request for Proposal.

If your firm is interested and qualified, please submit five (5) hard copies and one (1) electronic copy (on CD or DVD) of your proposal on October 28, 2010 by 3:00 p.m. to:

County of San Luis Obispo
Debbie Belt, GSA - Purchasing
1087 Santa Rosa Street
San Luis Obispo, CA 93408

If you have any questions about the proposal process, please contact me. For technical questions and information contact the Project Manager, Tom Trott, at (805) 781-1186 or via email at ttrott@co.slo.ca.us.

Questions pertaining to the content of this Request for Proposal must be made in writing via e-mail to the Project Manager. All such questions and responses will be posted (anonymously) at: http://www.slocounty.ca.gov/GSA/Purchasing/Current_Formal_Bids_and_Proposals.htm. The District reserves the right to determine the appropriateness of comments / questions that will be posted on the website.

Debbie Belt

DEBBIE BELT
Buyer – GSA - Purchasing
dbelt@co.slo.ca.us

REQUEST FOR PROPOSALS
18" LOPEZ PIPELINE CLEANING PROJECT

GENERAL INFORMATION

Purpose

The San Luis Obispo County Flood Control and Water Conservation District (District) is seeking a qualified and experienced pipeline cleaning contractor to perform cleaning (pigging) services on an approximate 5.5 mile section of 18" nominal diameter potable waterline. The selected contractor will clean the pipeline with the goal of removing an approximate ¼-inch thick amorphous aluminum silicate deposit from the inner wall of the pipeline in accordance to the requirements specified in the Scope and Conditions of Work (Attachment A). The purpose of this request for proposals (RFP) is to provide interested contractors with sufficient information concerning the services desired by the District.

Background

The 18" Lopez Water Supply Project Water Distribution System (Lopez Pipeline) has been in service for approximately 40 years. The 5.5 mile segment of the Lopez Pipeline to be cleaned supplies the downstream communities of Grover Beach, Pismo Beach, Avila Beach, Port San Luis and San Luis Bay Drive (CSA12) areas with water for consumption and for fire fighting. It has never been cleaned since being originally placed into service and now has an approximately ¼-inch thick amorphous aluminum silicate material deposited on the inside of the line. This deposit reduces the pipeline's capacity and downstream pressures.

Location and Existing Facilities

The services included in this RFP shall include cleaning the Lopez Pipeline from approximate Stations 696+50 to 405+80, as shown in the attached as-built plans.

Station 696+50 is located on El Camino Real, near the intersection of Brisco Road, in the City of Arroyo Grande, California. A buried 18"x18"x18" tee has been installed at this location for the purpose of inserting and launching cleaning pigs.

Station 405+80 is located on Shell Beach Road, near the intersection of Vista Del Mar Avenue, in the City of Pismo Beach, California. A buried 18"x18"x18" wye has been installed at this location for the purpose of retrieving cleaning pigs.

All existing valves between Stations 696+50 and 405+80 are gate valves.

Pipeline Cleaning Schedule

Pipeline cleaning work will be performed between December 20, 2010 and January 7, 2011, as specifically specified in the Scope and Conditions of Work (Attachment A). During the cleaning operations, District's water will be out of water service so it is incumbent upon the Contractor to complete all work within the time provided for the project.

Pre-Proposal Conference

An on-site pre-proposal conference will take place at 10:00 a.m. on Tuesday, October 19, 2010 at the intersection of Shell Beach Road and Vista Del Mar in Pismo Beach, CA. The purpose of the conference is to better inform proposers of site conditions and project requirements. Pre-proposal conference attendance is optional. Contractor shall email the Project Manager, Tom Trott, at ttrott@co.slo.ca.us to confirm conference attendance no later than October 15, 2010. Attendance will be at the cost of the proposer.

Each proposer will have the opportunity to carefully examine the Scope and Conditions of Work in comparison with the project site. Any conflict that exists shall be brought to the District's attention for resolution at the pre-proposal conference or by email at a time no later than three business days before the proposals are submitted.

Each proposer shall fully inform himself, prior to submitting proposals, of all existing conditions and limitations under which the project will be performed, and shall include in his Cost Proposal a sum to cover all costs of all items necessary to perform the work as set forth in the Scope and Conditions of Work. No allowance will be made to any proposer for claims arising from the existing conditions, which could have been ascertained by an examination of the project site and the review of the Scope and Conditions of Work.

SCOPE OF SERVICES

Scope of Work

The scope of work for this project, including project summary and details, are fully described in the attached Scope and Conditions of Work (Attachment A). This Scope and Conditions of Work will become part of the Contract for Special Services by Independent Contractor.

Special Services Contract

The selected contractor must execute the District's standard Contract for Special Services by an Independent Contractor. A sample of said contract is attached hereto (Attachment C).

Bonds and Insurance Requirements

The selected contractor shall comply with the following bonding and insurance requirements:

1. The selected contractor shall provide insurance coverage, as shown in Sections 7 and 10 of the attached Contract for Special Services by Independent Contractor (Attachment B). This amount of insurance coverage shall be reflected in your Cost Proposal (Attachment C).

2. The selected contractor shall indemnify the District as included in Section 8 and 9 of the attached Contract for Special Services by Independent Contractor.

3. The selected contractor shall provide a performance bond (see Attachment D) equal to 100 percent of the contract price to guarantee faithful performance of the contract.

PROPOSAL SUBMITTAL AND SELECTION

1. All proposals, consisting of five (5) hard copies and one (1) electronic copy (on CD or DVD) must be received by mail, recognized carrier, or hand delivered no later than 3:00 p.m. on October 28, 2010. Late proposals will not be considered and will be returned, unopened.

2. All correspondence should be directed to:

   San Luis Obispo County
   General Services Agency
   1087 Santa Rosa Street
   San Luis Obispo, CA 93408
   ATTENTION: DEBBIE BELT
   Telephone: (805) 781-5903

3. All costs incurred in the preparation and submission of proposals and related documentation will be borne by the proposer.

4. It is preferred that all proposals be submitted on recycled paper, printed on two sides.

5. Selection of qualified proposers will be by an impartial Selection Committee using an approved County procedure for awarding professional contracts. Selection will be made on the basis of the proposals as submitted, although the District reserves the right to interview applicants as part of the selection process. The proceedings of the Selection Committee are confidential, and members of the Selection Committee are not to be contacted by the proposers.

6. This Request for Proposal does not constitute an offer of employment or to contract for services.

7. The District reserves the option to accept or reject any or all proposals, wholly or in part, received by reason of this request, and make more than one award, or no award, as the best interests of the District may appear.

8. All documents submitted to the District in response to this Request for Proposal will become the exclusive property of the District and may be returned to the proposer or kept by the District, at the District's sole discretion.

9. All proposals shall remain firm for ninety (90) calendar days following closing date for receipt of proposals.

10. The District reserves the right to award the contract to the firm who presents the proposal which in the judgment of the District, best accomplishes the desired results, and shall include, but not be limited to, a consideration of the service fee.

11. Any contract awarded pursuant to this Request for Proposal will incorporate the requirements and specifications contained in this Request for Proposal. All

information presented in a proposer's proposal will be considered binding upon selection of the successful proposer, unless otherwise modified and agreed to by the District during subsequent negotiations.

12. The successful proposer is expected to execute a contract similar to the sample contract in Appendix C. This sample contract is for reference to the anticipated terms and conditions governing the District and the successful proposer. The proposer must take exception in their proposal to any section of the attached contract they do not agree with. Failing to do so will be deemed as acceptance by the proposer to the terms spelled out in the sample contract. The District reserves the right, in its sole discretion, to add, delete, or modify, or negotiate additional terms and conditions to the attached contract. BEFORE BEGINNING ANY WORK OR SUBMITTING A PROPOSAL IT IS ADVISED THAT PROPOSERS READ THE COUNTY INSURANCE AND INDEMNIFICATION REQUIREMENTS IN THE ATTACHED SAMPLE CONTRACT. The selected proposer will be asked to provide evidence that District insurance requirements have been met. See Appendix C – Sample County Contract, and in the Sample County Contract the insurance requirements are found in Exhibit A.

13. Under the provisions of the California Public Records Act (the "Act"), Government Code section 6252 et seq., all "public records" (as defined in the Act) of a local agency, such as the County, must be available for inspection and copying upon the request of any person. Under the Act, the County may be obligated to provide a copy of any and all responses to this Request for Proposal, if such requests are made after the contract is awarded. One exception to this required disclosure is information which fits within the definition of a confidential trade secret [Government Code section 6254(k)] or contains other technical, financial or other data whose public disclosure could cause injury to the proposer's competitive position. If any proposer believes that information contained in its response to this Request for Proposal should be protected from disclosure, the proposer MUST specifically identify the pages of the response that contains the information by properly marking the applicable pages and inserting the following notice in the front of its response:

> ***NOTICE:*** *The data on pages _ of this response identified by an asterisk (*) contain technical or financial information, which are trade secrets, or information for which disclosure would result in substantial injury to the proposer's competitive position. Proposer requests that such data be used only for the evaluation of the response, but understands that the disclosure will be limited to the extent the County considers proper under the law. If an agreement is entered into with the proposer, the County shall have the right to use or disclose the data as provided in the agreement, unless otherwise obligated by law.*

The District will not honor any attempt by proposer to designate its entire proposal as proprietary. If there is any dispute, lawsuit, claim or demand as to whether information within the response to the Request for Proposal is protected from disclosure under the Act, proposer shall indemnify, defend, and hold harmless, the District arising out of such dispute, lawsuit, claim or demand.

PROPOSAL FORMAT

A qualifying proposal must address all of the following points and shall be in the format outlined in this section:

1. Project Title

2. Proposer's Firm Name

3. Firm Qualifications

   a. Proposer's firm address and contact information. If a team of firms/contractors is proposed for the project, provide information for each firm/contractor and specifically describe each firm/contractor's project role.

   b. Provide any characteristics that give proposer's firm and/or his team of firms/contractors a competitive advantage over other proposers for this specific project.

   c. Names, qualifications, training and experience of personnel to be assigned to this project. If a team of firms/contractors is proposed to perform the project, provide this information for personnel from each firm/contractor.

   d. Project list, containing at least five (5) similar projects (minimum length 3 miles, minimum size 12 inches) completed in the last three years. If proposer plans to perform project with a team of firms/contractors, project list shall contain at least five similar projects, as described above, for each firm/contractor that will be directly involved in project oversight (the proposer), pipeline cleaning and wastewater treatment and disposal. Teams that have successfully worked together on projects similar to this project will be given preference. Project lists shall include the following information at a minimum:

      - Project Name
      - Client contact for project (telephone number)
      - Dates of work, including whether or not project was completed on time
      - Location of work
      - Project cost
      - Proposer's role in project
      - Other contractors/firms involved in the project, including roles
      - Type of material/substance removed from pipeline
      - Length, material, size and use of pipe (potable water preferred)
      - Method of wastewater treatment/disposal
      - Challenging characteristics of the project (i.e. stuck pigs, project timing, wastewater discharge, etc.)

   e. Provide a minimum of three client references on client letterhead from recent similar projects, including name, address and phone number of individuals to contact for referral.

4. Understanding of and Approach to the Project

   a. Description of approach that will be taken to successfully accomplish this project, including, but not limited to pigging, wastewater treatment/discharge and sludge collection/disposal.

   b. Indication of information and participation required from the District that is not included in the Scope and Conditions of Work.

5. Cost Proposal

   a. Complete the Cost Proposal form attached hereto (Attachment B). The Cost Proposal form will be used as an attachment to the contract upon award and execution

   b. Cost Proposal shall include all the work specified in the Scope and Conditions of Work (Attachment A). Each Cost Proposal item shall include the specific work specified in the Scope and Conditions of Work.

6. Local Proposers Preference (see Attachment E)

ATTACHMENTS

Attachment A: Scope and Conditions of Work
Attachment B: Cost Proposal Form
Attachment C: Sample Contract for Services by Independent Contractor
Attachment D: Performance Bond Form
Attachment E: Vendor Preference Form

ATTACHMENT A

SCOPE AND CONDITIONS OF WORK

SCOPE AND CONDITIONS OF WORK
(LOPEZ 18" PIPELINE CLEANING PROJECT)

SECTION 1. DESCRIPTION OF WORK

1-1.01 Summary of Work: Contractor shall clean, via pigging, a nominal 18-inch diameter, approximate 5.51 mile long section of the Lopez Distribution System pipeline (Pipeline), including furnishing all transportation, materials, equipment, tools, appurtenances, tests, labor, and supplies necessary for sawcutting, removal of pavement and excavation for exposure of existing pig insertion and retrieval fittings; traffic control for all project activities; pipeline pigging operations; treatment and discharge of waste water generated by pigging operations; transport and disposal of sludge generated by pigging operations, backfill and pavement reconstruction to restore excavations at pig insertion and retrieval fittings; site clean up; and other such items or detail work not mentioned herein that is required by the Standard Plans and/or Project Plans, the Standard Specifications, these Special Provisions and/or encroachment permits issued by the City of Arroyo Grande and the City of Pismo Beach.

All such work shall be done in accordance with applicable local, state and federal laws, codes and regulations, these Special Provisions, the 2006 State of California Department of Transportation Standard Specifications, and 2006 State Standard Plans.

This Scope and Conditions of Work is referred to as "Special Provisions" herein.

1-1.02 Project Purpose: The inner wall of the portion of Pipeline to be pigged has an approximate ¼" thick deposit of amorphous aluminum silicate. The purpose of this project is to remove said deposit from the inner wall of the pipe. Appendix I contains an analysis of the pipeline deposit.

1-1.03 Existing Facilities and Work Location: The Lopez Distribution Pipeline shall be cleaned from approximate Stations 696+50 to 405+80 per the Lopez Water Supply Project Water Distribution System – Unit 3 as-built plans in Appendix J. The existing pipe in this portion of the system is primarily asphalt coated, cement mortar lined steel pipe; however, some short stretches of C905 PVC also exist within this section. The steel portion of the pipeline has a nominal inner diameter (including the cement mortar lining) of 18.3 inches and a nominal outer diameter of 19.4 inches (excluding the asphalt coating). The PVC portions of pipeline have a nominal inner diameter of 17.8 inches and a nominal outer diameter of 19.5 inches. All butterfly valves shown on the as-built plans have been replaced with gate valves to accommodate pigging activities.

Station 696+50 is located on El Camino Real, near the intersection of Brisco Road, in the City of Arroyo Grande, California. A buried 18"x18"x18" pig insertion tee (with blind flange) exists beneath El Camino Real at this location.

All pig launching activities will take place at this location. Appendix B contains an as-built detail of the pig insertion tee and Appendix A contains an aerial exhibit of its location.

Station 405+80 is located on Shell Beach Road, near the intersection of Vista Del Mar Avenue, in the City of Pismo Beach, California. A buried 18”x18”x18” pig retrieval wye (with blind flange) exists beneath Shell Beach Road at this location. All pig retrieval activities will take place at this location. Appendix B contains an as-built detail of the pig retrieval wye and Appendix A contains an aerial exhibit of its location.

Waste water from pigging activities will be discharged into an existing concrete drainage inlet located on the east side of Shell Beach Road, approximately 1200 feet north of the pig retrieval wye. The existing concrete drainage inlet has two 6”x24” (approximately) rectangle openings and a removable concrete lid. See Appendix F for pictures of the existing concrete inlet.

Treatment facilities and staging may be placed on the east side of Shell Beach Road between the retrieval wye and the discharge drainage inlet. Contractor will be allowed to use an approximate 16-foot wide area along the entire 1200-foot length of roadway between the retrieval wye and discharge drainage inlet. Appendix E contains an aerial exhibit of this area.

1-1.04 <u>Pigging Design Parameters:</u> The following parameters may be used to design pipeline pigging activities:

- Existing Pipeline (Steel)
  - Nominal Inside Diameter (including lining): 18.3”
  - Nominal Outside Diameter (excluding coating): 19.4”
  - Nominal cement mortar lining thickness: 3/8”
- Existing Pipeline (C905 PVC)
  - Nominal Inside Diameter: 17.8”
  - Nominal Outside Diameter: 19.5”
- Length of pipeline to be cleaned: ~29,070 LF (~5.51 miles)
- Static Pipe Water/Deposit Volume (based on nominal ID): ~397,200 gal
- Pipeline Solid Deposits Volume: ~2,880 CF or ~21,530 gallons (Note volume of deposits suspended in undewatered slurries will be greater)
- Minimum Scouring Velocity: 4 ft/sec or 3,200 gpm
- Estimated Time for One Pig Run (at 4 ft/sec): ~2 hours
- Max Allowable Turbidity for Ocean Discharge: 225 NTU
- Max Allowable Total Chlorine Residual for Ocean Discharge: 0.01 mg/L

SECTION 2. CONSTRUCTION DETAILS

SECTION 2-1. GENERAL REQUIREMENTS

2-1.01 Order of Work: Order of work shall conform to the provisions in Section 5-1.05, "Order of Work, "of the Standard Specifications (State of California Department of Transportation, "Caltrans", latest edition) and these Special Provisions.

ALL WORK SHALL TAKE PLACE BETWEEN MONDAY, DECEMBER 20, 2010, AND FRIDAY, JANUARY 7, 2011.

Between Monday, December 20, 2010 and Friday, December 24, 2010:

- At the pig insertion site, Contractor shall NOT initiate any work.
- At the pig retrieval site, Contractor may initiate and complete pigging preparation work, including but not limited to mobilization, uncovering the pig retrieval wye (sawcutting, pavement removal and excavation), traffic control, set up of pig retrieval facilities and set up of waste water treatment and discharge facilities.
- Working hours shall be as specified in City Encroachment Permits.

No work activity shall take place on Saturday, December 25, 2010 or Sunday, December 26, 2010.

Between Monday, December 27, 2010 and Friday, December 31, 2010:

- At the pig insertion site, Contractor shall initiate and complete pigging preparation work, including but not limited to mobilization, uncovering the pig insertion tee (sawcutting, pavement removal and excavation), traffic control and set up of pig launching facilities
- At the pig retrieval site, Contractor shall complete all remaining work necessary to perform pigging activities.
- Contractor shall initiate and complete ALL pipeline pigging activities. **CONTRACTOR SHALL WORK 24 HOURS PER DAY ONCE PIGGING HAS BEEN INITIATED TO COMPLETE ALL PIGGING ACTIVITIES BY 11:59 P.M. ON THURSDAY, DECEMBER 30, 2010.**
- The pipeline shall be ready for District to conduct bacteriological sampling and testing no later than 11:59 p.m. on Thursday, December, 30, 2010.
- Contractor may initiate and complete site clean up and demobilization activities, including but not limited to excavation backfill and pavement reconstruction at the pig insertion and retrieval sites, removal of wastewater treatment/discharge facilities and removal, transport and disposal of sludge.

No work activity shall take place on Saturday, January 1, 2011 or Sunday, January 2, 2011, unless there is an emergency.

Between Monday, January 3, 2011 and Friday, January 7, 2011:

- Contractor shall complete all backfill and pavement reconstruction, sludge disposal, demobilization and cleanup activities.
- Working hours shall be between 6:30 a.m. and 6:30 p.m.

Because of heavy traffic associated with the Shell Beach Elementary School scholastic schedule, no work, lane closures, project staging, street repairs or any other work shall be allowed on Shell Beach Road outside of the dates indicated above.

District Operators will operate the valves on the Lopez line that are needed to load the line and generate the required scouring velocity of 3,200 gallons per minute. The Contractor will operate all other valves required for the launching and receiving stations, and for the effluent processing water treatment system.

All work under this Contract shall be conducted in a manner which will minimize shutdowns, open roadways, or traffic obstructions caused by the construction. Shutdowns causing damage to adjacent public and private property shall not be permitted, and any damage resulting shall be the sole responsibility of the Contractor.

2-1.02 Liquidated Damages: It is agreed by the parties to the contract that in the case all the work called for under the contract is not finished or completed within the dates set forth in these Special Provisions, damage will be sustained by the District and its water customers, and that it is and will be impractical and extremely difficult to ascertain and determine the actual damage which the District will sustain in the event of and by reason of such delay.

It is therefore agreed that the Contractor shall pay the District the sum of **Fifteen Thousand Dollars ($15,000.00) per day** for each and every calendar day's delay in completing pipeline pigging activities, excluding bacteriological testing, after Thursday, December 30, 2010, as liquidated and agreed damages.

It is therefore also agreed that the Contractor shall pay the District the sum of **One Thousand Five Hundred Dollars ($1,500.00) per day** for each and every calendar day's delay in completing all contract work activities, after Friday, January 7, 2010, as liquidated and agreed damages.

The Contractor agrees to pay said liquidated damages herein provided for, and further agrees that the District may deduct the amount thereof from any moneys due or that may become due the Contractor under the contract.

Note that no additional runs of pigs and/or swabs, as specified in Section 2-7, "Pipeline Cleaning (Additional Runs)", of these Special Provisions will be required of the Contractor after 11:59 p.m. on Thursday, December 30, 2010.

2-1.03 Performance Bond: The Contractor shall furnish a Performance Bond to guarantee the faithful performance of the contract. This bond shall be equal to one hundred percent (100%) of the total Cost Proposal.

Surety on said bond must agree that death of the Contractor shall not relieve the surety of its obligation hereunder. The said surety, for the value received, must

stipulate and agree that all alterations, extensions of time, extra and additional work, and other changes authorized by these Special Provisions or any part of the Contract may be made without securing consent of the surety on the bond, and such actions shall not in any way affect the obligations of the surety on the bond.

2-1.04 Control of Materials: Attention is directed to Section 6, "Control of Materials," of the Standard Specifications and to these Special Provisions. The Contractor shall furnish all materials required to complete the work under this contract.

2-1.05 Project Team: If, in the Contractor's project proposal, submitted to the District, the Contractor proposes a team of firms/contractors to accomplish the work included in these Special Provisions, the Contractor shall utilize such firms to perform the work described in the Contractor's proposal. No contractor/firm proposed to be part of the Contractor's project team in his proposal shall be substituted without prior written approval of the District.

2-1.06 Means and Methods: The District will not have control over, be in charge of, nor be responsible for construction means, methods, techniques, sequences, or procedures, or for the safety precautions and programs in connection with the work, since these are solely Contractor's responsibility, unless otherwise required by these Special Provisions.

2-1.07 Submittals: The Contractor shall **submit ALL submittals required by these Special Provisions to the District within ten (10) calendar days, not including Saturdays, Sundays, and legal holidays, of the Contractor's receipt of the fully executed contract.** All submittals will be reviewed by the District and require the District's approval prior to start of work. Payment for submittals shall be included as part of the Section of these Special Provisions that describes said submittal. Submittals required by these Special Provisions include, but are not limited to:

- Traffic Control Plan
- Pipeline Cleaning Plan

2-1.08 Pre-Construction Conference: Prior to start of work, a pre-construction conference will be held at the site for the purpose of discussing with the Contractor the scope of work, Plans, Specifications, existing conditions, materials to be ordered, equipment to be used, security procedures and all essential matters pertaining to the prosecution of and the satisfactory completion of the project as required. The Contractor's representative at this conference shall include all major superintendents for the work and may include major sub-contractors.

2-1.09 Encroachment Permits: The Contractor shall apply for and obtain an Encroachment Permit for each location from the respective governing agency. In addition to providing project and contact information, the cities of Arroyo Grande and Pismo Beach will require that the Contractor prepare and submit a detailed traffic control plan prior to issuing an Encroachment Permit. Encroachment

Permit fees, excluding any required bonds, will be paid by the District. The Contractor shall observe and follow all encroachment permit requirements, and specifically those relating to work area traffic control. City contact information is as follows:

City of Arroyo Grande Public Works Department
208 East Branch Street
Arroyo Grande, CA 93420
(805) 773-7060

City of Pismo Beach Engineering Department
760 Mattie Road
Pismo Beach, CA 93449
(805) 473-5440

Encroachment Permit applications will require the Contractor's Traffic Control Plan. Said plan shall be reviewed by the District prior to submittal for Encroachment Permits.

2-1.10 Business Licenses: Based on anticipated encroachment permit requirements, the Contractor shall obtain and pay for city business licenses from the City of Arroyo Grande and the City of Pismo Beach.

2-1.11 Storage and Staging Areas: The Contractor shall be responsible for locating and procuring any needed additional storage and staging areas other than those indicated at the pig insertion and retrieval sites.

2-1.12 Protection of Property: All private or public property within the vicinity of the project site shall be protected at all times from the Contractor's operations. Any damage to property caused by the Contractor's operations shall be repaired by the Contractor at the Contractor's expense.

2-1.13 Electrical Power: No electrical power is available at either the insertion or retrieval sites. The Contractor shall be responsible for providing standby electrical power generation as may be needed to complete the pipeline cleaning and effluent processing requirements of these Special Provisions.

2-1.14 Temporary Sanitary Facilities: The Contractor shall provide and maintain temporary sanitary facilities at both locations for the duration of this project.

2-1.15 Payment: The contract Lump Sum price paid for Item "GENERAL REQUIREMENTS", shall include full compensation for furnishing all labor, materials, tools, equipment, and incidentals and for doing all the work involved as described in Section 2-1 of these Special Provisions, and as shown on the plans, as specified in the Standard Specifications and these Special Provisions, and no additional compensation will be allowed therefor.

SECTION 2-2. MOBILIZATION AND DEMOBILIZATION

2-2.01 Mobilization and Demobilization: Mobilization shall conform to the provisions in Section 11, "Mobilization", of the Standard Specifications and these Special Provisions.

Mobilization to the pig insertion site shall NOT take place prior to Monday, December 27, 2010.

Mobilization to the pig retrieval site shall NOT take place prior to Monday, December 20, 2010.

Demobilization of all work sites shall be complete by Friday, January 7, 2011.

Mobilization shall include moving from place of business to project site and all site preparation required to begin work on the project, excluding any work specified in Section 2-1 of these Special Provisions.

Demobilization shall include cleaning up and restoring the work areas and for moving from the project work site to the place of business when all other contract work has been completed. The Contractor shall be responsible for clean-up at all launch, retrieval, staging areas and at the wastewater treatment system site. The Contractor shall remove all equipment and debris from the area and shall rake any depressions in the gravel or soil to return the site to previous conditions.

The District shall approve all cleanup operations prior to the Contractor completing demobilization from the project site.

2-2.02 Payment: The contract Lump Sum price paid for "MOBILIZATION/DEMOBILIZATION", shall include full compensation for furnishing all labor, materials, tools, equipment, and incidentals and for doing all the work involved as described in Section 2-2 of these Special Provisions, and as shown on the plans, as specified in the Standard Specifications and these Special Provisions, and no additional compensation will be allowed therefor.

SECTION 2-3. TRAFFIC CONTROL

2-3.01 Traffic Control System: The Contractor shall provide a traffic control system for all work performed within the public road right of way. No work shall proceed until work area traffic controls have been approved by the District and are in place.

The traffic control system shall comply with the requirements of Encroachment Permits issued by City of Arroyo Grande and City of Pismo Beach and these Special Provisions.

Note that separate mobilizations for the establishment of traffic controls may be needed for excavation activities, cleaning operations, placing and curing of slurry backfill (with steel plating) and for asphalt paving at both the pig insertion and pig retrieval locations.

The Contractor's attention is directed to Sections 7-1.08, "Public Convenience," 7-1.09, "Public Safety," Sections 12, "Construction Area Traffic Control Devices," and 12-3.04, "Portable Delineators," of the Standard Specifications and these Special Provisions. The Contractor shall furnish all flagmen at his own expense and the provisions of Section 12-2.02, "Flagging Costs," of the Standard Specifications shall not apply.

The provisions in this section may be modified later if, in the opinion of the District, public traffic will be better served and work expedited. Said modifications or alterations shall not be adopted until approved in writing by the District.

2-3.02 Traffic Control Plan: The Contractor shall submit to the District a proposed Traffic Control Plan, addressing traffic control measures at all work sites within the road right of way. The Traffic Control Plan shall consist, at a minimum, of the following items:

- A schematic diagram indicating the proposed placement of all construction zone signs, traffic control devices, delineation, flaggers and other traffic control methods, including required distances for proper placement; and
- Reference to a standard work zone traffic control plan from either the WATCH handbook (see Appendix G) or the California Supplement to the Manual of Uniform Traffic Control Devices.

2-3.03 Traffic Control at Pig Insertion Site: The work and staging area for pig insertion and launching facilities shall take place in the ~14' wide southbound lane of El Camino Real, extending from the intersection of Brisco Road, northward for such a distance as needed and determined by the Contractor to stage and perform the work. All traffic lane closures, reconfigurations, taper lengths, signs and delineators shall be in accordance with the illustration for "Closing of Right Lane" of the WATCH handbook, included in Appendix G. At a minimum, two opposing 12' wide traffic lanes shall be maintained at all times.

2-3.04 Traffic Control at Pig Retrieval Site: The work and staging area for pig retrieval and effluent processing facilities shall take place in the ~16' wide northbound lane of Shell Beach Road, extending from just south of the Vista Del Mar intersection, northward for a distance of approximately 1,200 lineal feet to the existing ocean outfall drainage inlet. All traffic lane closures, reconfigurations, taper lengths, signs and delineators shall be in accordance with the illustration for "Closing of Half-Roadway or Off-Site Detour" of the WATCH handbook, included in Appendix G. At a minimum, two opposing 12' wide traffic lanes shall be maintained at all times.

2-3.05 Traffic Control Devices: The Contractor's attention is directed to the provisions of Section 12, "Construction Area Traffic Control Devices," of the Standard Specifications and these Special Provisions.

The Contractor shall furnish, erect and maintain such fences, barriers, lights, flares and signs as are necessary to give adequate warning to the public at all times that the project is under construction and of any conditions to be encountered as a result thereof, and he shall also erect and maintain such warning and directional signs as may be furnished by the District.

The Contractor shall furnish all sign panels, posts and hardware, and shall erect, maintain, and remove all construction area signs provided for in the Traffic Control Plan and in these Special Provisions. The base material of construction area signs shall not be plywood. Used sign panels, in good repair as determined by the District, may be furnished. Construction area signs shall not be used until they are needed, and when no longer needed they shall become the property of the Contractor and shall be removed from the site of the work.

If any component in the traffic control system is damaged, displaced, or ceases to operate or function as specified, from any cause, during the progress of the work, the Contractor, at his own expense, shall immediately repair said component to its original condition or replace said component and shall restore the component to its original locations.

2-3.06 Lane Closures: Lane closures will be required at both the pig insertion site and the pig retrieval site. The work area traffic control system for lane closures shall be in accordance with Section 12, "Construction Area Traffic Control Devices," of the Caltrans Standard Specifications, and the 1990, Seventh Edition, of the Work Area Traffic Control Handbook (WATCH). Illustrations for "Closing of Right Lane" and "Closing of Half-Roadway or Off-Site Detour" from the WATCH handbook, as applicable to this project, are included in Appendix E.

When lane closures are made for work periods only, at the end of each work period, all components of the traffic control system relating to said lane closures, except portable delineators placed along open trenches or excavation adjacent to the traveled way, shall be removed from the traveled way, shoulder and auxiliary lanes and shall become the property of the Contractor. If the Contractor so elects, said

components may be stored at selected central locations, approved by the District, within the limits of the right-of-way.

2-3.07 Safety: The Contractor's traffic control system shall provide constant safe travel to the public through or around all work sites at all times.

All work sites and traffic control measures shall be left in a manner that is safe to the traveling public, as determined by the District, on all non-working days and non-working hours. The Contractor shall have personnel on call during all non-working days and non-working hours to maintain or replace traffic control measures if needed.

No excavations shall be left open during non-working days and non-working hours. Where steel plates are used, they shall be pinned, and have a cold-mix slope of 12:1 placed on all sides. Steel plates shall be friction coated for traction and appropriate warning signs shall be posted.

All traffic control implemented during night work shall follow the guidelines of the National Cooperative Highway Research Program (NCHRP), Report 476, "Guidelines for Design and Operation of Nighttime Traffic Control for Highway Maintenance and Construction", including but not limited to reflective signage, reflective channelizing devices/ traffic control devices, worker visibility and lighting. Nighttime traffic control shall provide for worker and public safety.

2-3.08 Maintaining Access: The Contractor shall conduct his operations in such a manner that ingress and egress of abutting property owners along public roadways is maintained at all times, unless otherwise directed by the District in writing. Care will be taken by the Contractor that materials or equipment placed or parked within the road right-of-way will not block driveways or other access means used by the adjacent property owners. Free access shall also be maintained to all fire hydrants, water valves and meters

The Contractor shall make his own arrangements relative to keeping the working area clear of parked vehicles.

When entering or leaving roadways carrying public traffic, the Contractor's equipment, whether empty or loaded, shall in all cases yield to public traffic.

No cross street shall be closed overnight.

Contractor shall post all parking restrictions 24 hours before any work starts.

2-3.09 Payment: The contract Lump Sum price paid for "TRAFFIC CONTROL", shall include full compensation for furnishing all labor, materials, tools, equipment, and incidentals and for doing all the work involved as described in Section 2-3 of these Special Provisions, and as shown on the plans, as specified in the Standard Specifications and these Special Provisions, and no additional compensation will be allowed therefor.

SECTION 2-4. SAWCUTTING, EXCAVATION & EARTHWORK

2-4.01 General: The work to be done for Sawcutting, Excavation & Earthwork shall take place at both the pig insertion and pig retrieval sites and shall serve the purpose of exposing the insertion and retrieval fittings as necessary to perform pipeline cleaning work. Appendix B contains details of the existing pig insertion tee and retrieval wye that need to be exposed.

Sawcutting, excavation and earthwork shall NOT take place at the pig insertion site prior to Monday, December 27, 2010.

Sawcutting, excavation and earthwork shall NOT take place at the pig retrieval site prior to Monday, December 20, 2010.

2-4.02 USA Dig Alert: The Contractor shall notify Underground Service Alert and insure all underground utilities are located prior to sawcutting and excavation work.

2-4.03 Sawcutting and Removal of Asphalt Concrete Surfacing: The existing asphalt concrete surfacing shall be removed only to the extent necessary to provide for excavation that will appropriately expose the pig insertion and retrieval fittings. Asphalt concrete surfacing to be removed for the excavations shall be saw cut along the edges, broken up and completely removed. Prior to removing any asphalt concrete, the outside edge of the asphalt concrete to remain in place shall be saw cut to a neat line. The depth of cut shall be a minimum depth of 0.25 feet. The asphalt concrete shall be removed in such a manner so that the surfacing which is to remain in place is not damaged.

All material removed shall become the property of the Contractor and shall be disposed of in conformance with the provisions in Section 7-1.13, “Disposal of Materials Outside the Highway Right of Way,” of the Standard Specifications.

2-4.04 Excavation and Earthwork: Earthwork shall conform to the provisions in Section 19, "Earthwork," of the Standard Specifications and these Special Provisions.

After removal of the asphalt concrete surfacing, the Contractor shall hand-dig to remove existing 1-sack slurry backfill and to expose the insertion and retrieval fittings. To avoid damage to the existing pipeline and fittings, no use of power-assisted equipment will be allowed for this activity.

Surplus excavated material shall become the property of the Contractor and shall be disposed of outside the highway right-of-way in accordance with the provisions in Section 7-1.13, "Disposal of Material Outside the Highway Right-of-Way," of the Standard Specifications.

2-4.05 Existing Facilities: The work performed in connection with various existing facilities shall conform to the provisions in Section 15, "Existing Highway Facilities," of the Standard Specifications and these Special Provisions.

The locations of existing utilities where shown on the plans are based on available records and are approximate only. The Contractor shall assume sole and complete responsibility for locating or having located all underground utilities and other facilities and for protecting the same during the course of constructing the project. Any deviations from the plan location of any existing facilities shall be immediately brought to the attention of the District.

2-4.06 Interferences: If interferences occur at locations other than shown on the Drawings, the Contractor shall notify the District, and a method for correcting said interferences shall be supplied by the District. Payment for interferences that are not shown on the plans, nor which may be inferred from surface indications, shall be in accordance with the Special Provisions. If the Contractor does not expose all required utilities prior to shop drawing preparation, he shall not be entitled to additional compensation for work necessary to avoid interferences, nor for repair to damaged utilities

Any necessary relocations of utilities, whether shown on the Drawings or not, shall be coordinated with the affected utility. The Contractor shall perform the relocation only if instructed to do so in writing from the utility and the District.

2-4.07 Excavation Safety: All excavations shall be performed, protected and supported as required for safety and in the manner set forth in the operations rules, orders and regulations prescribed by the Division of Industrial Safety of the State of California.

The Contractor, prior to beginning any excavation 5 feet deep or over, shall submit to the District and shall be in receipt of the District's written acceptance of the Contractor's detailed plan showing design of all shoring, bracing, sloping of the sides of excavation, or other provisions for worker protection against the hazard of caving ground during the excavation of such trenches or structure excavation. Such plan shall be submitted at least 5 days before the Contractor intends to begin work on the excavation. The Contractor's attention is directed to the provisions for "Shoring and Bracing Drawings" in Section 6705 of the California Labor Code. If such plan varies from the shoring system standards established in the Construction Safety Orders of the State of California, such alternative systems plans shall be prepared by a Civil or Structural Engineer licensed in the State of California. Nothing herein shall be deemed to allow the use of shoring, sloping or protective system less effective than that required by the Construction Safety Orders of the Division of Industrial Safety.

Any damage to structures occurring through settlements, water or earth pressures, slides, caves or other causes due to failure or lack of sheeting or bracing or improper bracing, or through negligence or fault of the Contractor in any other manner shall be repaired by the Contractor at his own expense. Care shall be exercised in the drawing or removing of sheeting, shoring, bracing and timbering to prevent the caving or collapsing of the excavation faces that are being supported.

Barriers shall be placed at each end of all excavations and at such places may be necessary along excavations to warn all pedestrian and vehicular traffic of such excavations. Lighted barricades shall also be placed along excavations from sunset each day to sunrise of the next day until such excavation is entirely refilled.

Excavations around underground electrical ducts and conduits shall be performed using extreme caution to prevent injury to workmen or damage to electrical ducts or conduits. Similar precautions shall be exercised around gas lines, telephone and television cables.

2-4.08 Dewatering: District Operators will perform preliminary dewatering of the Lopez Pipeline, if necessary. The Contractor shall expect, and be prepared for, additional dewatering of the pipeline and excavations at both pig insertion and retrieval locations. This work shall be conducted in such a manner as to not allow the trench excavation to rapidly fill with water, which could cause contamination to the Lopez water transmission system. The Contractor shall have an operable sump pump, or pumps, available to remove water from the insertion tee and retrieval wye excavation and to prevent the water from rising above the blind flange fittings on the Lopez pipe.

2-4.09 Payment: The contract Lump Sum price paid for “SAWCUTTING, EXCAVATION AND EARTHWORK”, shall include full compensation for furnishing all labor, materials, tools, equipment, and incidentals and for doing all the work involved as described in Section 2-4 of these Special Provisions, and as shown on the plans, as specified in the Standard Specifications and these Special Provisions, and no additional compensation will be allowed therefor.

SECTION 2-5. EXCAVATION BACKFILL & PAVEMENT RECONSTRUCTION

2-5.01 General: The work for Excavation Backfill & Pavement Reconstruction shall take place at both the pig insertion and pig retrieval sites and shall serve the purpose of restoring both sites to a state that is equal to or better than their existing conditions. This work shall be performed after pipeline cleaning, disinfection and bacteriological testing and analysis is complete.

Excavation backfill and pavement reconstruction at all sites shall be complete by Friday, January 7, 2011.

Contractor's attention is directed to City of Arroyo Grande Standard Plan 135-AG (see Appendix C) and these Special Provisions for requirements of all Excavation Backfill & Pavement Reconstruction work. The Contractor shall also comply with any other requirements stated in encroachment permits issued to the Contractor by the Cities of Arroyo Grande and Pismo Beach.

Contractor shall backfill and pave the excavation in accordance with the City of Arroyo Grande Standard Plan 135-AG as modified herein (see Appendix C).

2-5.02 Exposed Ductile-Iron Pipe Fittings and Steel Pipe: After pipeline cleaning and prior to excavation backfill, the Contractor shall reinstall blind-flanges on the insertion tee and retrieval wye with new gaskets. Gaskets shall be compounded for water service in accordance with AWWA C219.

Exposed pipe and fitting assemblies shall be encased with loose polyethylene. Loose polyethylene film encasement shall have a minimum thickness of 8 mils. Installation, materials and all other requirements of the latest revision of Standard of ANSI/AWWA C105/A21.5, entitled "Polyethylene Encasement for Ductile-Iron Piping for Water and Other Liquids," shall be closely followed. Pipe wrap tape, 10 mil minimum thickness, 2-inch minimum width, shall be used to secure the polyethylene film.

2-5.03 Excavation Backfill: Contractor shall backfill in accordance with City of Arroyo Grande Standard Plan AG-135 (see Appendix C), except for the following modification. Said standard shows sand bedding to 6" above the pipeline and a 1-sack (sand/cement) slurry for all additional backfill to the underside of the asphalt concrete pavement. For the purpose of this project **all** backfill material around the pipe and to within 4" of the surface shall be a 1-sack sand/cement slurry.

2-5.04 Asphalt Concrete Reconstruction: Contractor shall reconstruct asphalt concrete pavement in accordance with City of Arroyo Grande Standard Plan AG-135 (see Appendix C), except for the following modifications. Asphalt concrete pavement shall be 4" thick, placed and compacted in two separate lifts, to match the existing road surface. Asphalt concrete surfacing shall not be placed prior to the curing of the 1-sack slurry backfill.

2-5.05 Traffic Markings: Traffic markings (stripes, arrows, stop bars, etc.) shall be replaced in accordance with Section 84, Traffic Stripes and Pavement Markings, of the Caltrans Standard Specifications. Materials shall be replaced in kind, as directed by the District.

2-5.06 Payment: The contract Lump Sum price paid for "EXCAVATION BACKFILL AND PAVEMENT RECONSTRUCTION", shall include full compensation for furnishing all labor, materials, tools, equipment, and incidentals and for doing all the work involved as described in Section 2-5 of these Special Provisions, and as shown on the plans, as specified in the Standard Specifications and these Special Provisions, and no additional compensation will be allowed therefor.

SECTION 2-6. PIPELINE CLEANING

2-6.1 GENERAL

1.01 Description

A. This section describes the minimum components for the project cleaning plan and the performance requirements for pipeline cleaning (pigging). The Contractor shall consider all of the elements described herein but shall be responsible for all equipment, labor, tools, materials and incidentals needed to clean the 18" diameter (nominal) Lopez Project distribution pipeline between stations ~696+50 and ~405+80 and perform effluent processing.

B. The principle items of service and equipment required shall include, but not be limited to, the following:
   1. Factory Trained Service Personnel
   2. Cleaning Swabs/Pigs
   3. Pig Insertion and Launching Station equipment (Sta. 696+50)
   4. Pig Receiving & Extraction Station equipment (Sta. 405+80)
   5. Electronic Pig Tracking Equipment
   6. Effluent processing and Wastewater Treatment System including, but not necessarily limited to: temporary piping, pumps, storage tanks, surge tanks, filters and any other equipment necessary to meet the Waste Discharge Requirements.

C. Contractor shall be responsible for providing complete and functional pigging and effluent processing wastewater treatment system. The following section includes minimum performance requirements and general specifications for the cleaning support and wastewater treatment equipment including temporary wastewater piping, pumps, valves, storage tanks, settling tanks, and filters sized to handle approximately 3,200 gpm of average flow and a volume of approximately 397,200 gallons from the cleaning operation for each pigging run. It is anticipated that a minimum of eight runs of pigs and/or swabs will be required to clean the pipe. After completion of the last planned pig run, the District shall determine if additional pig runs will be needed to adequately clean the line. A maximum turbidity of 1.0 NTU will be achieved at the end of all cleaning operations and prior to closing up the pipeline for bacteriological testing and returning it to domestic service.

   The specifications for effluent processing and wastewater treatment and handling components are intended to represent the anticipated minimal components of an acceptable wastewater treatment plan. The Contractor shall be responsible for reviewing the pigging and treatment system components herein and developing an approach that will minimize the amount of water used for this project.

D. The Contractor shall recommend any revisions to design criteria and requirements presented herein that will improve cleaning performance, reduce the volume of water generated, and perform these tasks in a cost-effective manner. Said

revisions shall be incorporated in the pigging and wastewater treatment plans. The District shall authorize any changes to the approve project cleaning plan.

E. The Contractor shall be responsible for installing and operating a effluent processing and wastewater treatment system that is capable of meeting the General Permit for Low Threat Discharges to Surface Waters based on the pipeline information and chemical analysis of the pipe lining. The primary criteria for discharge of any treatment effluent to the ocean outfall is that the water be completely dechlorinated (0 mg/L chlorine residual) and have a turbidity level of no more than 225 NTU.

F. The attached drawings schematically show only four Baker tanks, piping and valves that represent only a portion of the material and equipment needed to complete the project. It shall be the Contractor's responsibility to propose and provide all equipment, pipes, pumps, tanks, filters etc. needed for a complete and operable pigging and effluent treatment system.

1.02 Submittals

A. Pipeline Cleaning Plan, including the following components:

1. Cleaning operation plan, including the following items:
   a. Sequence and estimated schedule of cleaning tasks;
   b. Size, number, type, and manufacturer of pigs and swabs intended for use. Note that a minimum of eight pig runs, are anticipated and included in the bid quantities. A separate contract item is included to compensate the Contractor for additional pig runs should they be required by the District;
   c. Description of launcher, receiver, pumps, tanks, and support equipment required for pigging operations;
   d. Description of pig tracking system, equipment and method;
   e. Plan for dislodging or removing pigs, swabs and/or any other item(s) inserted in the pipeline. Plan shall be capable of being implemented within 2 hours of such item(s) getting stuck. Plan shall include the equipment, tools and materials Contractor will have available to excavate a pipe, extract the pig or other item, and repair the line without causing a delay greater than 12 hours. Minimal procedures for repair of the pipeline after retrieval of stuck pigs or other items, should excavation be required, are provided in Section 2-6.3 in these Special Provisions; and
   f. Safety plan describing safety precautions to be implemented during pigging operations.

2. Wastewater treatment and disposal plan, including the following items:
   a. List, description, and schematic site plan of major equipment items such as temporary settling tanks, piping, filters, pumps, and other equipment;
   b. Estimate of discharge volume (total gallons) and discharge flow (gpm) expected as a result of cleaning activities;

c. Name (s) of the employee (s) responsible for monitoring and operating the temporary wastewater treatment and disposal system during the cleaning operation; and
d. A statement that the responsible employee(s) has (have) been trained to properly use the chlorine and turbidity monitoring equipment specified herein; understand(s) the General Permit for Discharges with Low Threat to Surface Waters issued by the Central Coast Regional Water Quality Control Board for this project; and has (have) been trained to use each component of the treatment system in order to properly operate and monitor the wastewater system to meet the permit requirements.

B. Pipeline Cleaning Plan shall be submitted and approved prior to initiating pigging operations.

1.03 Standards:

Work shall be performed in accordance with the most recent revision of applicable codes, guidelines, rules, regulations, and standards of the following:

- American Water Works Association (AWWA)
- Occupational Safety and Health Administration (OSHA)
- State and local regulations and codes
- Public Improvement Standards for the County of San Luis Obispo
- Public Works Standard Specifications and Drawings for the City of Arroyo Grande
- Public Works Standard Specifications and Drawings for the City of Pismo Beach
- California Department of Transportation Standard Specifications

2-6.2 MATERIALS

1.01 Pigs

A. The size and number of pigs to be utilized will be selected by the Contractor. Open-cell, polyurethane-foam pigs ranging in density from 1.5 lbs. per cubic foot to 10 lbs. per cubic foot with a variety of coatings and cleaning tools shall be used and will be provided by an experienced manufacturer with an NSF exemption. Steel-body mandrel pigs, solid-cast urethane pigs, and other rigid pigs will not be accepted. The Contractor shall propose, submit information and obtain approval of the types or pigs he intends to use prior to pipeline cleaning. At a minimum, pigs shall be chosen and manufactured so that the neither the pipeline or its lining is damaged during cleaning operations.

Pigs shall be able to pass through reductions of up to 65% of cross sectional area of nominal pipe. Pigs shall be capable of passing through standard piping configurations such as 90-degree elbows, tees, crosses, wyes, and gate valves. The Contractor's attention is directed to the Lopez Project as-built plans in Appendix J for configuration of the existing line. **Note that all valves shown on the as-built plans have been replaced with gate valves and that some**

portions of cement mortar lined steel pipe have been replaced with C905 PVC pipe.

B. Generally pigs will have a bullet-shaped nose with an exterior coating of closed cell urethane and shall be suitable for use in potable water systems. The peripheral surface on the pig shall be resilient and abrasive resistant, maintaining a constant sliding seal against the interior wall of the pipeline. The pig shall also be capable of scratching, scraping, plowing, and jetting.

C. Pigs shall be as manufactured by Pipeline Pigging Products, Inc., Girard Industries, or approved equal.

1.02 Pig Launcher and Receiver

A. Contractor shall provide launcher and receiver equipment that is capable of connecting to the launching and retrieval fittings shown in the details in Appendix B and described herein. The Contractor shall be responsible for providing any equipment (including, but not limited to pumps, tanks, valves, hoses, and piping) required for launching or receiving the pigs.

B. Contractor shall note that both the pig insertion and retrieval sites have blind-flanges bolted to the fittings as shown in the details in Appendix B.

C. Safety Note: Pigging accidents, especially those resulting in bodily injury or death, most often occur around the launcher or receiver. Pigging operators shall have and implement proper safety plans prior to performance of pigging operations.

1.03 Electronic Pig Tracking Equipment

An electronic tracking system shall be provided for tracking and locating pigs at any location along the pipeline. Pig tracking system shall consist at a minimum of a transmitter for each pig or swab and a pig tracking receiver.

1.04 Temporary Launching Station Water Pump

A. A trailer-mounted pump suitable for use with potable water shall be provided near the launching station in case a pig becomes lodged in the pipeline. The pump shall be diesel-powered and shall be suitable for use with Class 150 pipe.

B. A fire hydrant near the launching station will be available by the City of Arroyo Grande to serve as a water source for a pump in case a pig becomes lodged in the pipeline or to provide additional pressure for launching the pig(s) if needed.

1.05 Temporary Wastewater Transfer Feed Tank and Pump System

A. It is anticipated that the wastewater collection, treatment and disposal system will require a transfer feed tank and pump system. If required in Contractor's proposed system, the guidelines of this section shall apply.

B. The wastewater pump feed tank shall be trailer-mounted and shall provide an appropriate storage volume. The tank shall be provided with level sensors and transmitters for activating and deactivating the downstream transfer pump.

C. A diesel-powered, trailer-mounted pump capable of delivering the anticipated discharge flow to the settling tanks shall be provided. The pump shall be activated and shut off by levels in the upstream feed tank. At a minimum, the pump system shall include the following:
   - Discharge-end check valve and shutoff valve;
   - Controls (Hand-Off-Auto operation);
   - Suction-end shutoff valve;
   - Discharge end pressure gauge; and
   - Diesel tank with level gauge.

1.06 Temporary Wastewater Settling Tanks

A. It is anticipated that the wastewater collection, treatment and disposal system will require temporary wastewater settling tanks. If required in Contractor's proposed system, the guidelines of this section shall apply.

B. Temporary settling tanks shall be trailer-mounted and shall provide a minimum active storage volume of 21,000 gallons each. Tanks shall be Baker Tanks or approved equal.

C. Tanks shall be piped together in series with inlets to accept pigging effluent water and with outlets to discharge settled water, meeting the discharge requirements, to the ocean outfall storm drain.

D. Each tank shall have multiple outlets and valves to allow the Contractor to decant the wastewater from various levels in the tank as shown on the plans. All outlets shall be appropriate for connection to the temporary piping.

E. All inlets and outlets shall have appropriately sized valves to allow the Contractor to control effluent flow to tanks in series and to outlet lines.

1.07 Temporary Wastewater Piping

A. All temporary wastewater piping and fittings shall be grooved-end aluminum rated for a maximum working pressure of 150 psi.

B. Fittings shall be coupled using flexible systems compatible with grooved end pipe (Victaulic style or approved equal).

1.08 Dechlorinating Sand Filter, Pump and Backwash Tank

A. It is anticipated that the wastewater collection, treatment and disposal system will require a dechlorinating sand filter, pump and backwash tank component. If required in Contractor's proposed system, the following guidelines of this section shall apply.

B. A pressure filter (with media of sand and dechlorinating tablets) and pump will be provided as a finishing stage for effluent from the settling tanks. Level sensors and transmitters shall be installed in the settling tank upstream of the filter pump in order to activate and deactivate the pump. The pump shall be sized to handle the same flow as the wastewater transfer pump discussed above and the pressure recommended by the filter manufacturer for optimal operation and performance.

   At a minimum, the pump system shall include the following:
   - Discharge-end check valve and shutoff valve;
   - Controls (Hand-Off-Auto operation);
   - Suction-end shutoff valve;
   - Discharge end pressure gauge; and
   - Diesel tank with level gauge.

C. An appropriately sized backwash tank shall be provided to receive wastewater from the filter's backwash operation. The backwash operation shall be operated manually. Pressure gauges shall be provided on both the filter inlet and outlet. Dechlorinating tablets shall be placed in the filter media as required to meet the Waste Discharge Requirements (WDR) criteria for compliance with the established chlorine limit. Access ports shall be provided in the filter body to allow addition of dechlorinating tablets.

D. Dechlorinating tablets shall be sodium bisulfite, Vita Dechlor, or an approved equal.

1.09 Repair Pipe and Couplings

The Contractor shall have, at a minimum, the following materials on site for repairing a waterline in case a pig or swab becomes lodged within the pipe and the pipe must be cut to remove the pig:
- Sufficient length of 18" diameter C-905 PVC pipe
- Two (2) 18" diameter mechanical joint couplings: SSB-Ductile Iron Class 350, Tyler Pipe 5-644L long sleeves with retainer glands, rubbers and bolt kits
- Polyethylene encasement per ANSI/AWWA C105/A21.5
- Sufficient length of cathodic conductor cable: #4 standard copper conductor conforming to ASTM B-8, with extruded kynar insulation.

2-6.3 EXECUTION

1.01 Pigging Operation Schedule Constraints

A. Pigging operations shall NOT commence before Monday, December 27, 2010.

B. Pigging operations, excluding bacteriological testing, shall be complete <u>NO LATER</u> than 11:59 p.m. on Thursday, December 30, 2010.

C. Once pigging operations have begun, Contractor shall work 24 hours per day until pigging operations are complete.

D. The pipeline shall be ready for District to perform bacteriological sampling and analysis no later than 11:59 p.m. on Thursday, December 30, 2010.

E. Only in the event of an emergency, as determined by the District, will pigging operations be allowed to be performed outside of the above constraints. The District will not require additional runs, as specified in Section 2-7 of these Special Provisions, after 11:59 p.m. on Thursday, December 30, 2010.

1.02 <u>Pigging Operation</u>

A. The Contractor shall conduct pigging operations to clean the inside of the existing pipeline, so as to remove the approximate 1/4-inch thick amorphous aluminum silicate deposit, foreign growths, tuberculation, slurries, and other matter, leaving the inside surface of the pipe as smooth and as free from irregularities as age and attrition from use will permit.

B. The Contractor shall use the "progressive" method of pipeline cleaning and be responsible to select the sizes and quantities of pigs to efficiently clean the pipeline.

Pigging operations shall consist of a minimum of eight (8) runs of pigs and/or swabs through the entire length of pipeline.

The Contractor may propose an alternate pigging procedure, subject to the approval of the District, requiring less runs of pigs and/or swabs based on his experience and the pipeline conditions encountered.

At its discretion, the District may require the Contractor to perform additional runs of swabs and/or pigs, as specified in Section 2-7 of these Special Provisions. Such runs will be performed at contract unit price for “Pipeline Cleaning (Additional Runs)”.

C. The Contractor shall plan and conduct pigging operations in a manner that minimizes the volume of wastewater generated by the pigging operation.

D. The Contractor shall be responsible for installing and operating all launching and retrieval equipment and shall coordinate isolation of the pipelines with District staff.

E. The Contractor shall provide and operate a pump, and any piping/fittings necessary to connect pump to nearby fire hydrant, to provide additional water pressure that may be required to launch and propel the pigs through the pipeline at 4 feet per second, or 3,200 gpm. At no time shall a line pressure of 150 psi be exceeded at any point in the pipeline.

F. The Contractor shall launch the pigs and/or swabs, monitor their progress through the pipeline and thoroughly flush the pipeline after recovering the pig.

G. Final pipeline flushing shall be deemed complete once the turbidity of discharge water from the pipeline is less than 1.0 NTU.

H. The cleaning operation shall be such that the system may be immediately put back in service once cleaning has been completed, bacterial testing has been performed by District staff, and results indicate that the line is not contaminated.

I. The Contractor shall provide adequate site or temporary portable lighting to allow night operations and to allow District staff to observe and inspect active areas of the pigging operation (including the wastewater treatment system site and the launching and retrieval stations).

J. The Contractor shall conduct his operations in conjunction with the District and other affected agencies to minimize impact to natural waterways and shall not permit silt, clay, or mud to enter any drainage system.

1.03 Wastewater Collection, Treatment, and Disposal

A. The Contractor shall design, provide and operate a wastewater treatment system to collect, treat and dispose of all water generated by pigging operations and pipeline flushing in accordance with the Waste Discharge Requirements, General Permit for Discharges With Low Threat To Water Quality (WDR), attached to these Special Provisions in Appendix K.

It shall be the Contractor's responsibility to read, understand, implement and comply with the WDR regulations relating to ocean discharges. The Contractor's attention is directed to Section 21. "Mandatory Minimum Penalties" of the WDR requirements. Minimum penalties of $3,000 are stipulated for violations described therein. The Contractor shall be responsible for payment at his own cost of any violation of the WDR as levied by the California Regional Water Quality Control Board.

The Contractor's attention is directed to the following significant WDR requirements for wastewater discharged to the ocean:

- Wastewater shall have total chlorine residual less than or equal to 0.01 mg/L.
- Wastewater shall have turbidity less than or equal to 225 NTU.

Only when wastewater meets all of the requirements of the WDR may it be discharged into the existing storm drainage system that flows into the ocean outfall.

B. The Contractor shall design the wastewater treatment system so that it can be installed and operated within the confines of the northbound lane on Shell Beach Drive located between the pig retrieval fitting and the discharge drainage inlet.

This area is approximately 16 feet wide by 1,200 feet long and is depicted in Appendix E.

C. The wastewater treatment system components shall be selected, installed, operated and be the responsibility of the Contractor. A sample layout of settling tanks and temporary piping is depicted in Appendix H. The system is anticipated to consist, at a minimum, of the following components:
   1. Wastewater transfer pump and feed tank to convey water from flushing and pigging operations to settling tanks;
   2. Tanks for settling out pipe deposits and sediment from the wash water;
   3. Temporary wastewater piping/valves to convey wastewater to specific settling tanks and, ultimately, into the discharge storm drain inlet; and
   4. A dechlorinating sand filter or dechlorinating contact tank (with supporting feed pump, tank, and backwash waste tank) for dechlorination and filtration of settled wash water prior to discharge.

   The Contractor may submit a wastewater treatment plan with alternative components, subject to the approval of the District.

D. Wastewater samples (minimum volume of 500 mL) shall be collected and analyzed once each hour (minimum) from two locations in the temporary wastewater treatment system and provided to District staff for laboratory analysis:
   1. At a sampling port located between the retrieval wye and the wastewater collection and treatment system; and
   2. At the outlet pipe that drains into the storm drain.

   The District shall be responsible for measuring the following parameters in these samples: total chlorine, turbidity, total dissolved solids, and pH.

   The Contractor shall also use an EPA-compliant portable turbidimeter (Hach Turbidimeter 2100P or approved equal) and EPA-compliant portable chlorine meter (LaMotte Chlorine Colorimeter or approved equal) to analyze samples from these same locations every one hour, or less as needed, during the pigging and flushing operations. The Contractor shall be responsible for providing any reagents, standards kits, and other equipment required for the proper function and use of this equipment. The Contractor shall use these tests to ensure that the system is operating properly and is meeting the WDR regulations for both turbidity and total chlorine concentration. If any results of said tests exceed either 225 NTU or 0.01 mg/L total chlorine residual, the District shall be notified immediately.

E. The Contractor shall provide adequate site or temporary portable lighting to allow District staff to observe the visual characteristics of the wastewater (including the wastewater treatment system site and the launching and retrieval stations).

F. All equipment used for wastewater treatment and discharge shall comply with all applicable federal, state and local requirements regarding emissions and noise. Contractor shall note that the wastewater treatment system is located near

residences and shall take precautions to cause the minimal disturbance to residents, especially during night operations.

G. If Contractor's wastewater discharge into the existing drainage inlet, depicted in Appendix F, requires modification or removal of a portion of the existing fence, Contractor shall restore fence to its pre-existing condition prior to demobilization.

H. Upon completion of the pigging operation, the Contractor shall continue decanting the wastewater settling tanks until effluent no longer complies with the WDR. Upon completion of decanting operations and approval by the District for disposal of the sludge, the Contractor shall haul sludge, at his cost, per Section 2-8 of these Special Provisions.

1.04 Removal of Stuck Pigs/Swabs

A. The Contractor shall have readily available the manpower, equipment, and materials required to track and locate any pig that may become lodged in the pipeline. Locating the pipeline is the responsibility of the District. Locating and dislodging the pig is the responsibility of the Contractor.

B. The contractor shall implement all measures and methods of dislodging a stuck pig and/or swab, as described in the Contractor's Pipeline Cleaning Plan, prior to cutting into the existing pipe for removal of a stuck pig and/or swab.

C. Should removal of a stuck pig and/or swab require cutting into the existing Lopez pipeline, the Contractor shall perform all work to remove a section of pipeline sufficient to dislodge and retrieve the stuck item(s). Once removed, the Contractor shall restore the pipeline to working condition using materials described in Section 2-6.2 of these Special Provisions and the procedures described below:
   1. Contractor shall excavate as necessary to expose the appropriate section of pipe per the requirements of Section 2-4 of these Special Provisions;
   2. Contractor shall cut an appropriate section of existing pipe to remove stuck pigs and/or swabs;
   3. Contractor shall repair pipe with 18" C-905 PVC pipe and mechanical couplings to the satisfaction of the District;
   4. Contractor shall encase exposed steel pipe and ductile iron fitting assemblies with loose polyethylene and pipe wrap tape per the requirements of Section 2-5 of these Special Provisions;
   5. Contractor shall install a cathodic conductor cable, via exothermal welds, to maintain continuity of the existing steel pipeline across the section of PVC pipe; and
   6. Contractor shall backfill, repave and restore the excavation per the requirements of Section 2-5 of these Special Provisions.

D. In the event pigs, swabs, and/or other items become lodged in the pipeline, the Contractor shall work diligently to dislodge or remove such items as expediently as possible so that a delay no greater than 12 hours occurs.

1.05 Disinfection and Bacteriological Testing

A. The Contractor shall take all necessary precautions to keep excavations dry, and the existing pipeline fittings clean and free of contamination at all times. The Contractor shall follow AWWA C651-99 "Standard for Disinfecting Water Mains" during the work operations. Specifically, Section 4.7, "Disinfection Procedures When Cutting Into or Repairing Existing Mains" and Section 4.7.2, "Swabbing with Hypochlorite Solution" shall be followed. This standard requires that the interior of all new and existing pipe and fittings used shall be swabbed or sprayed with a 1% hypochlorite solution before they are installed.

B. After pipeline flushing is complete and prior to placing the pipeline into service, the District, at its expense, will collect and analyze bacteriological samples in accordance to San Luis Obispo County Procedural Memorandum O-3 (see Appendix J). Two consecutive sets of acceptable samples, taken at least 24 hours apart, shall be collected from the pipeline at intervals not less than 1200 feet prior to. The results for the testing must be negative for total coliform and E. Coli and shall reveal a heterotrophic plate count of less than 500 CFU/mL. If samples do not meet these requirements, Contractor shall flush pipeline and District will again collect and analyze samples. This will occur until two consecutive samples are found to be acceptable. In some cases, other measures (above and beyond flushing) may be necessary to attain two consecutive acceptable bacteriological samples.

   Contractor shall note that bacteriological testing will be complete not less than a minimum of 48 hours after the first bacteriological samples are taken.

2-6.4 Payment

The contract Lump Sum price paid for “PIPELINE CLEANING”, shall include full compensation for furnishing all labor, materials, tools, equipment, and incidentals and for doing all the work involved as described in Section 2-6 of these Special Provisions, and as shown on the plans, as specified in the Standard Specifications and these Special Provisions, and no additional compensation will be allowed therefor.

SECTION 2-7. PIPELINE CLEANING (ADDITIONAL RUNS)

2-7.01 Additional Pigging Runs: The District, at its discretion, may require the Contractor to perform runs of pigs and/or swabs in addition to those called for in the Contractor's Pipeline Cleaning Plan and as specified in Section 2-6 of these Special Provisions. Any such runs shall be performed in accordance to the requirements of Section 2-6 of these Special Provisions. Each additional run shall consist of running a single pig and/or swab, of the type and size to be determined by the Contractor, the full length of the pipeline from the pig launching site to the pig retrieval site. This item shall also include all effluent processing, wastewater treatment and sludge disposal required for each additional run.

2-7.02 Payment: The contract Unit price paid for "PIPELINE CLEANING (ADDITIONAL RUNS)", shall include full compensation for furnishing all labor, materials, tools, equipment, and incidentals and for doing all the work involved as described in Section 2-7 of these Special Provisions for each additional run of a pig and/or swab, and as shown on the plans, as specified in the Standard Specifications and these Special Provisions, and no additional compensation will be allowed therefor.

SECTION 2-8. SLUDGE REMOVAL, TRANSPORT & DISPOSAL

2-8.01 General: The Contractor shall be responsible for the removal, transport and disposal of all sludge produced by pigging operations.

2-8.02 Upon completion of decanting operations, and approval by the District for disposal of the sludge, the Contractor shall haul the settled sludge generated by the pigging operations to the Lopez Water Treatment Plant for disposal – a distance of approximately 12 miles, one-way. The address for the Wastewater Treatment Plant is:

2845 Lopez Drive
Arroyo Grande, CA 93420

The Contractor will be responsible for procuring a sufficient number of tanker trucks and for scheduling such deliveries not less than 48 hours in advance of hauling the sludge.

2-8.03 Payment: The contract Lump Sum price paid for "SLUDGE REMOVAL, TRANSPORT, AND DISPOSAL", shall include full compensation for furnishing all labor, materials, tools, equipment, and incidentals and for doing all the work involved as described in Section 2-8 of these Special Provisions, and as shown on the plans, as specified in the Standard Specifications and these Special Provisions, and no additional compensation will be allowed therefor.

APPENDIX

Appendix A	Lopez Pipeline Pigging Project Vicinity Map
Appendix B	18” Pig Insertion Tee and Retrieval Wye Details
Appendix C	City of Arroyo Grande Standard Detail 135-AG
Appendix D	Pig Insertion Tee Site and Lane Closure Area
Appendix E	Pig Retrieval Wye and Wastewater Processing Site and Lane Closure Area
Appendix F	Pigging Wastewater Discharge Drain Inlet Pictures
Appendix G	WATCH Handbook Traffic Control Details
Appendix H	Sample Settling Tank Layout Detail
Appendix I	Pipeline Deposit Analysis Technical Memorandum
Appendix J	San Luis Obispo County Procedural Memorandum O-3
Appendix K	Waste Discharge Requirements General Permit for Low Threat Discharges
Appendix L	Lopez Water Supply Project As-Built Plans

APPENDIX A

LOPEZ PIPELINE PIGGING PROJECT
VICINITY MAP

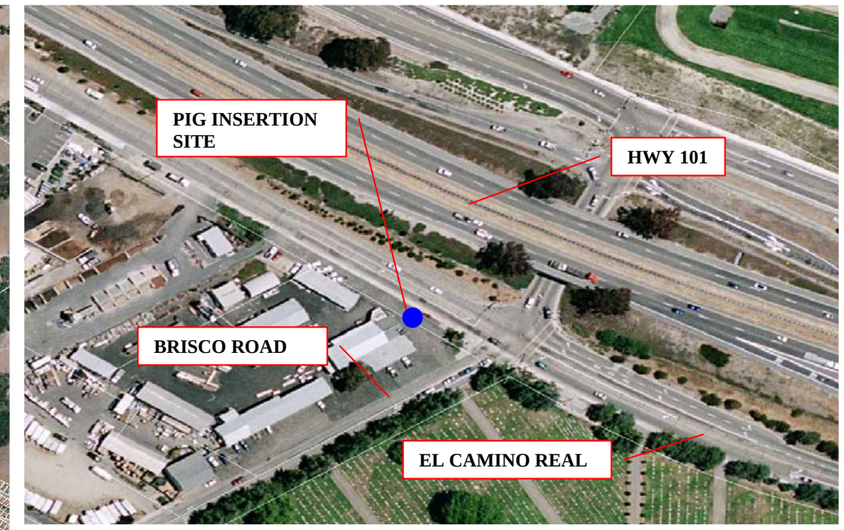

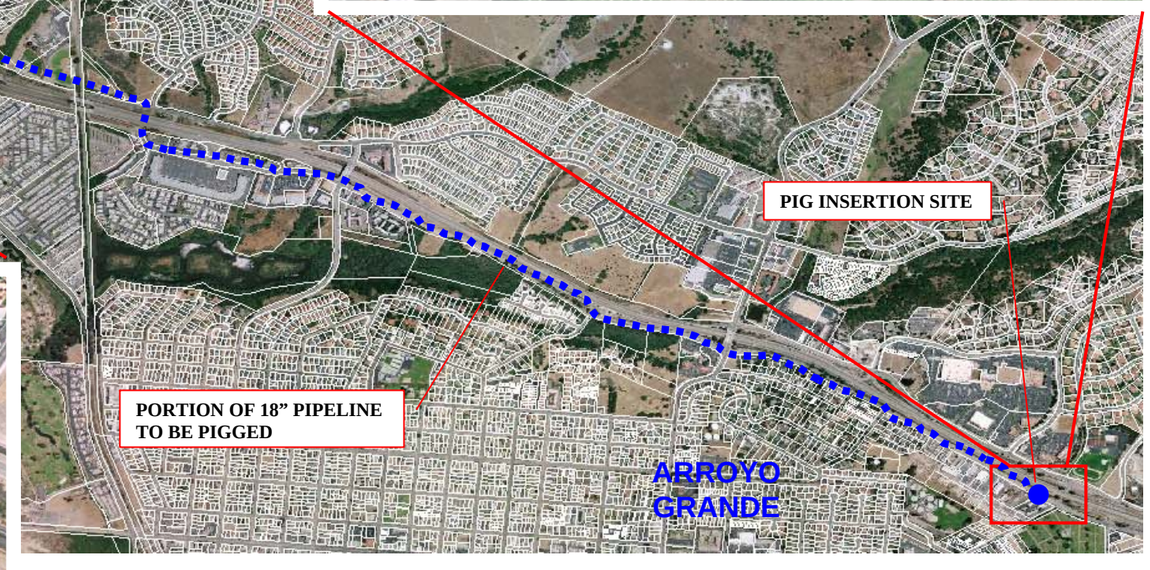

LOPEZ DISTRIBUTION 18" PIPELINE PIGGING PROJECT

VICINITY MAP

APPENDIX B

18” PIG INSERTION TEE AND RETRIEVAL WYE DETAILS

LOPEZ 18" PIPELINE PIGGING PROJECT
CONSTRUCTION DETAIL OF PIG INSERTION TEE.
EL CAMINO REAL @ BRISCO RD, ARROYO GRANDE

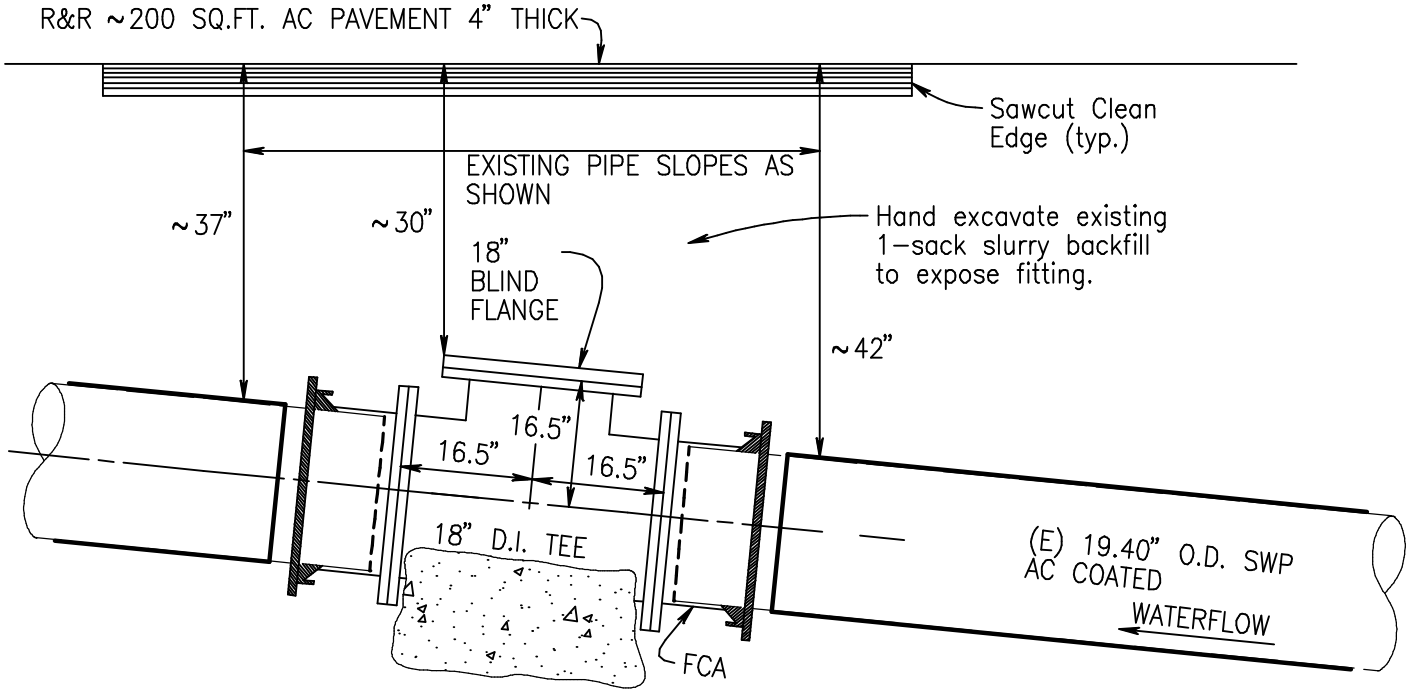

WORK COMPLETE
PROFILE VIEW

NOTES:

1. EXISTING 4" ACP AND EXISTING OTHER CABLES NOT SHOWN IN PROFILE.
2. WRAP EXPOSED PIPE & FITTINGS PRIOR TO BACKFILL WITH POLYETHELENE PLASTIC PER SPECIFICATIONS.
3. BACKFILL EXCAVATION WITH 1-SACK PCC / SAND SLURRY IN ACCORDANCE WITH CITY OF AG STANDARD PLAN 135-AG.
4. EXCAVATE & EXPOSE TEE BLIND FLANGE TO INSTALL PIG INSERTION / LAUNCHER ASSEMBLY.

REGISTERED PROFESSIONAL ENGINEER
R. JAMES GARING
No. 26993
Exp. 3-31-07
CIVIL
STATE OF CALIFORNIA

NORTHERLY

SCALE
1" = 2'

GARING, TAYLOR & ASSOCIATES, INC.
CIVIL ENGINEERS SURVEYORS PLANNERS
141 SOUTH ELM STREET ARROYO GRANDE, CALIFORNIA 93420 (805) 489-1321

LOPEZ 18" WATERLINE
PIGGING PROJECT
GTA 06-050
JUNE 2009

LOPEZ 18" PIPELINE PIGGING PROJECT
CONSTRUCTION DETAIL OF PIG RETRIEVAL WYE
SHELL BEACH ROAD @ VISTA DEL MAR, PISMO BEACH

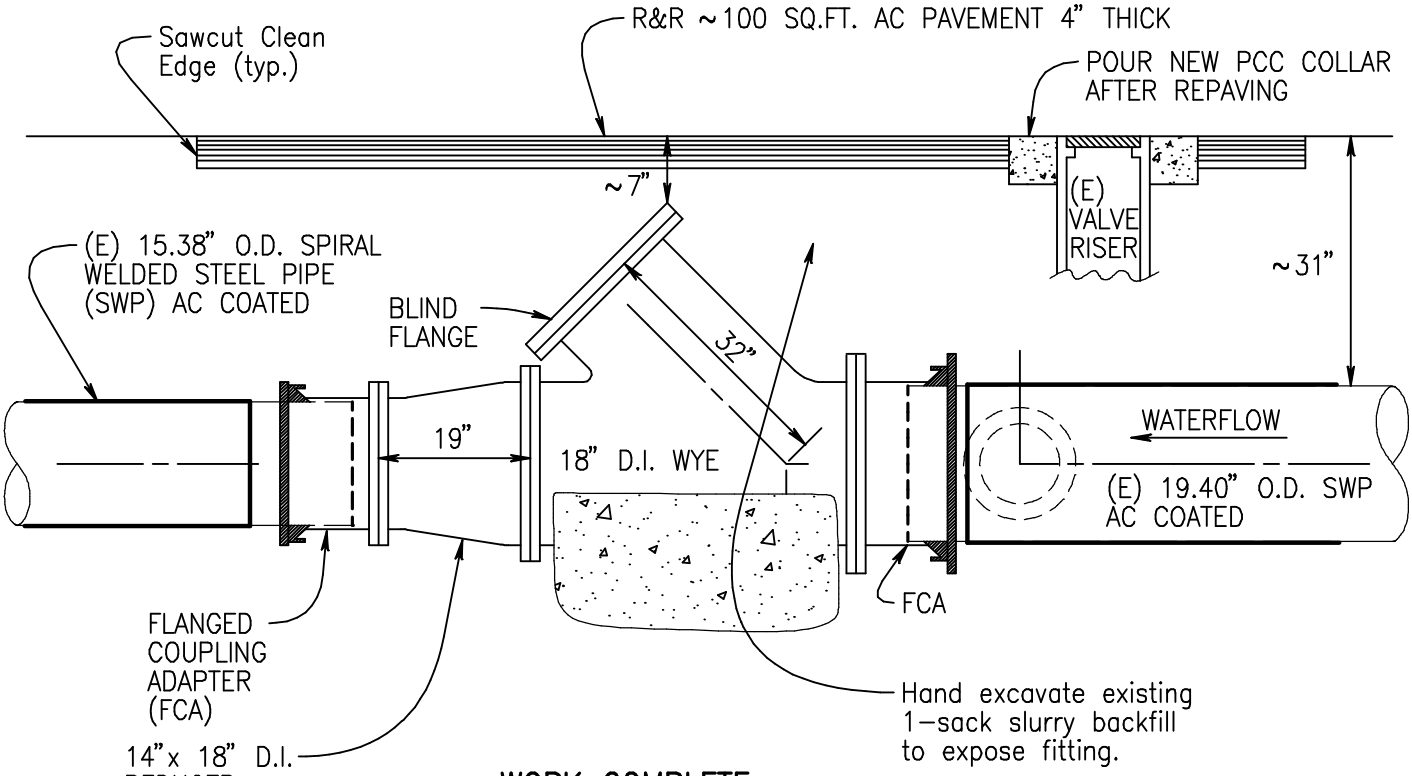

WORK COMPLETE PROFILE VIEW

NOTES:

1. EXISTING 4" ACP AND EXISTING OTHER (COMM) CABLE NOT SHOWN IN PROFILE.
2. BACKFILL EXCAVATION WITH 1-SACK PCC / SAND SLURRY IN ACCORDANCE WITH CITY OF AG STANDARD PLAN 135-AG.
3. EXCAVATE & EXPOSE WYE BLIND FLANGE TO INSTALL PIG RETRIEVAL & EXTRACTION ASSEMBLY.

NORTHERLY

SCALE
1"=2'

GARING, TAYLOR & ASSOCIATES, INC.
CIVIL ENGINEERS SURVEYORS PLANNERS
141 SOUTH ELM STREET ARROYO GRANDE, CALIFORNIA 93420 (805) 489-1321

LOPEZ 18" WATERLINE
PIGGING PROJECT
GTA 06-050
JUNE 2009

APPENDIX C

CITY OF ARROYO GRANDE STANDARD PLAN 135-AG ASPHALT PAVEMENT REPLACEMENT OVER TRENCH CONSTRUCTION

NOTE:
THIS STANDARD PLAN SHALL BE MODIFIED AS SPECIFIED IN THE SPECIAL PROVISIONS.

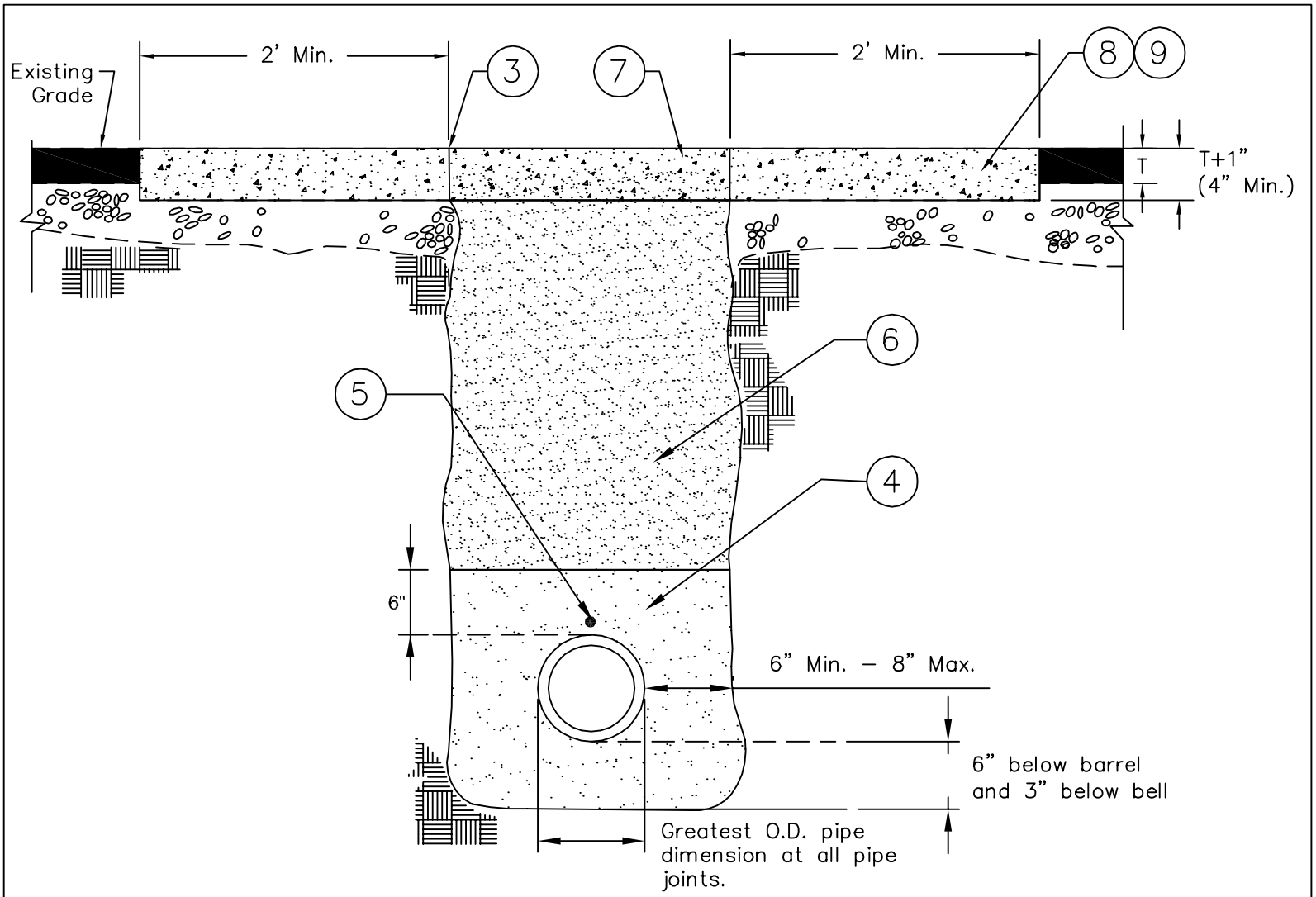

NOTES:

1. Prior to any beginning any trench cut, Contractors shall meet with the Public Works Department to determine if pavement cuts are restricted by the City of Arroyo Grande Pavement Cut Policy (Resolution No. 3819).
2. It is the responsibility of the Contractor or Premittee to contact "Underground Service Alert" (USA) at 800–227–2600 to determine locations for existing Power, Telephone, Oil, Natural Gas, Cable TV, Sewer, Storm Drainage, and any other underground facilities.
3. Intial sawcut may be width of trench necessary to complete utility installation.
4. Pipe bedding shall be clean sand (SE=25 Min.) compacted to a 95% Min.
5. Number 12 insulated THW copper wire shall be placed continously over all PVC pipe and shall be brought to the surface in valve wells, meter boxes, & similar structures.
6. Trench backfill shall be 1–Sack (sand/cement) slurry.
7. Temporary trench paving shall be 4" Min. of Cold Mix Asphalt. (Steel Traffic Plates may be used in lieu of temporary paving only with written approved by the City Engineer). Temporary Trench Paving shall be completely removed within 7 days, and trench shall be paved with permanent paving to depth of 1" greater than existing pavement thickness.
8. Permanent A.C. Paving shall be Type B, $\frac{1}{2}$" Aggregate and shall be placed in accordance with the "Greenbook" Standard Specifications Section 302–5. Sawcut existing roadway 2' on each side of trench. Provide vertical surfaces and square corners. Overlapping cuts shall not be permitted.
9. When edge of trench cut is with 3' of an existing trench or curb, pavement cut shall extend to existing trench or curb.
10. All pavements markings and markers which are disturbed during trenching and asphlat replacement shall be replaced.

CITY OF ARROYO GRANDE - ENGINEERING DEPARTMENT

ISSUE DATE:

APR 1, 2005

ASPHALT PAVEMENT REPLACEMENT OVER TRENCH CONSTRUCTION

Don Spagnolo, P.E.
Director of Public Works/City Engineer
L.C.E. No. 42993

STANDARD PLAN

135-AG

Sheet 1 of 1

APPENDIX D

PIG INSERTION TEE SITE AND LANE CLOSURE AREA

Pig Launching Station & Lane Closure Area
(El Camino Real at Brisco Road, Arroyo Grande)

No Scale, Job No. 06-050, 9/22/10

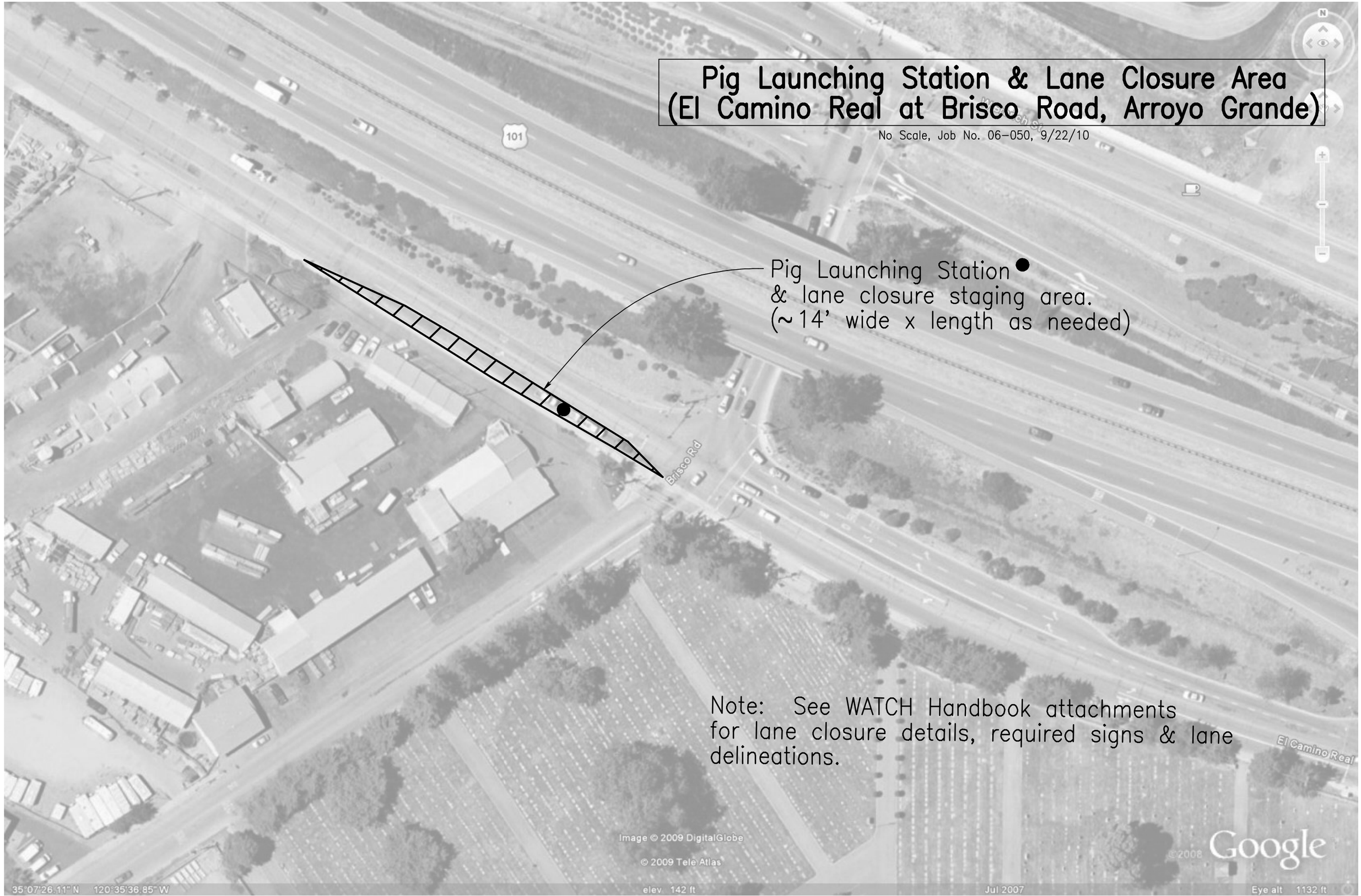

Note: See WATCH Handbook attachments for lane closure details, required signs & lane delineations.

APPENDIX E

PIG RETRIEVAL WYE AND WASTEWATER PROCESSING SITE AND LANE CLOSURE AREA

Pig Extraction Station & Effluent Processing Lane Closure Staging Area (Shell Beach Road, Pismo Beach)

No Scale, Job No. 06-050, 9/22/10

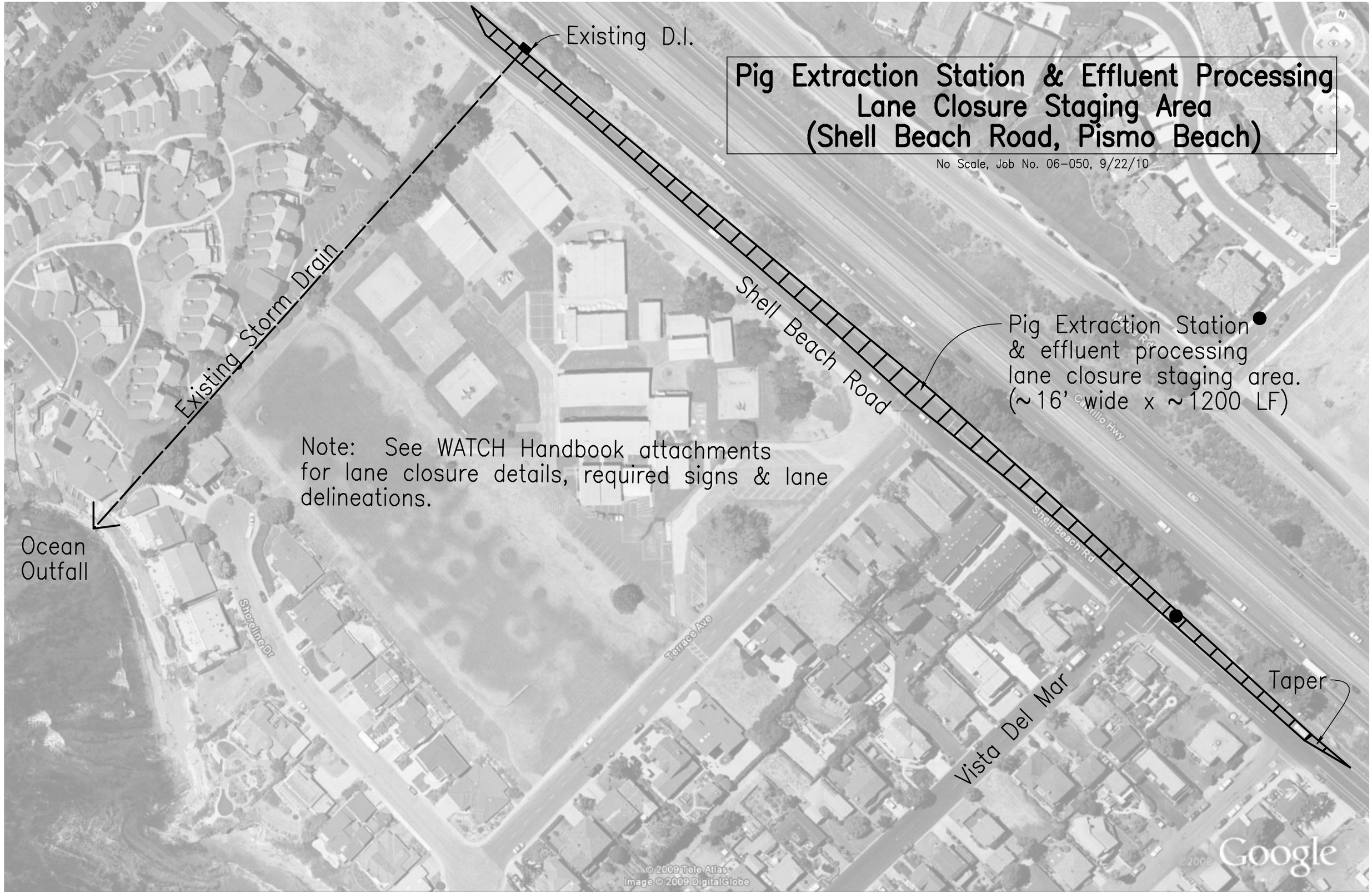

APPENDIX F

PIGGING WASTEWATER DISCHARGE DRAIN INLET PHOTOS

Existing Drain Inlet for Pigging Wastewater Discharge

Photo 1-
Existing drain inlet looking north along the east side of Shell Beach Road

Photo 2-
Existing drain inlet looking south along the east side of Shell Beach Road

Photo 3-
Close up of one of the existing drain inlet openings

APPENDIX G

WATCH HANDBOOK TRAFFIC CONTROL DETAILS

(← east) Brisco Road (West →)

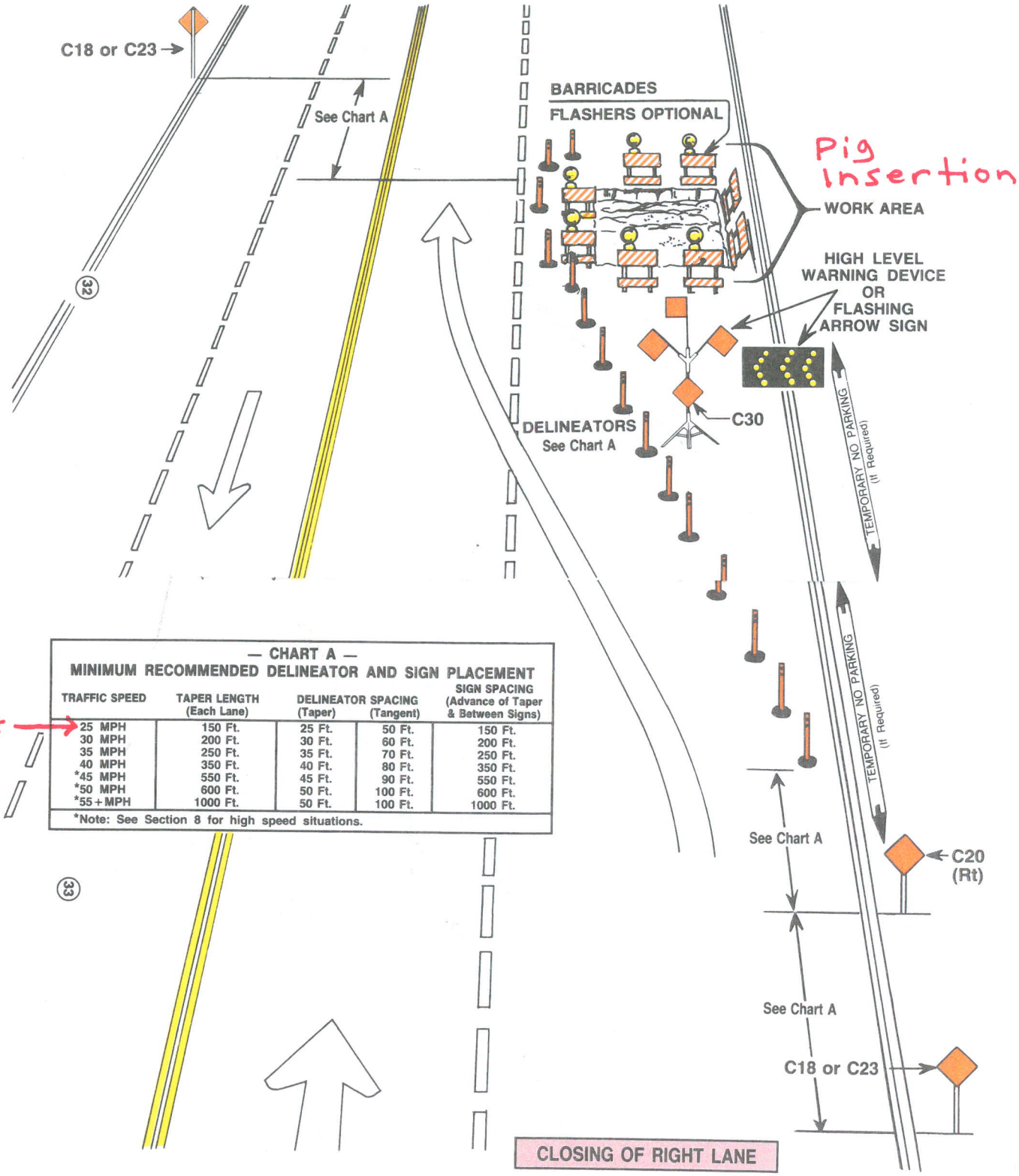

— CHART A —
MINIMUM RECOMMENDED DELINEATOR AND SIGN PLACEMENT

TRAFFIC SPEED	TAPER LENGTH (Each Lane)	DELINEATOR SPACING (Taper)	DELINEATOR SPACING (Tangent)	SIGN SPACING (Advance of Taper & Between Signs)
* → 25 MPH	150 Ft.	25 Ft.	50 Ft.	150 Ft.
30 MPH	200 Ft.	30 Ft.	60 Ft.	200 Ft.
35 MPH	250 Ft.	35 Ft.	70 Ft.	250 Ft.
40 MPH	350 Ft.	40 Ft.	80 Ft.	350 Ft.
*45 MPH	550 Ft.	45 Ft.	90 Ft.	550 Ft.
*50 MPH	600 Ft.	50 Ft.	100 Ft.	600 Ft.
*55+MPH	1000 Ft.	50 Ft.	100 Ft.	1000 Ft.

*Note: See Section 8 for high speed situations.

El Camino Real (Southbound ↑)

Effluent Processing Area from Vista Del Mar to ocean outfall D.I. (≈ 1,200LF)

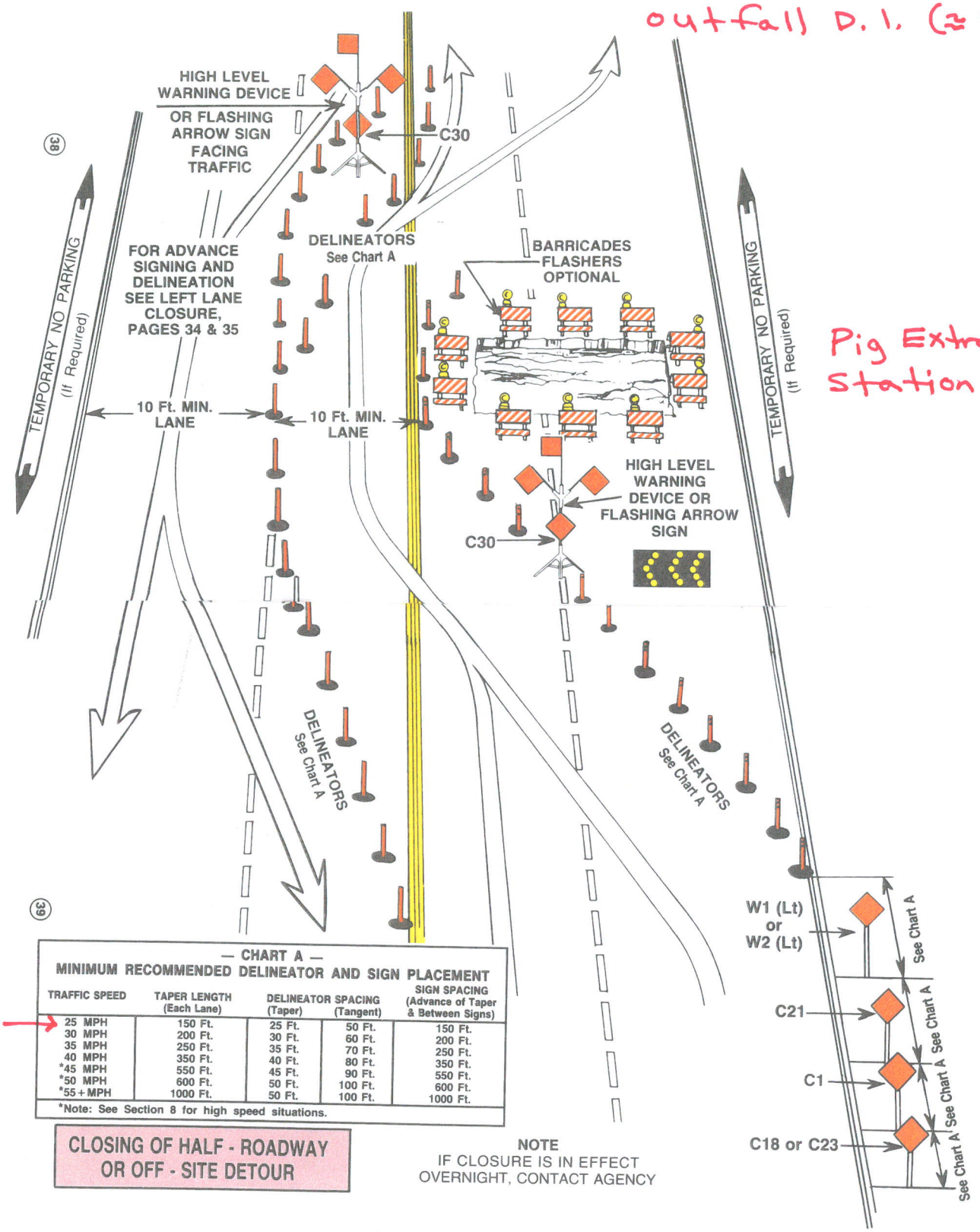

Pig Extraction Station

— CHART A —
MINIMUM RECOMMENDED DELINEATOR AND SIGN PLACEMENT

TRAFFIC SPEED	TAPER LENGTH (Each Lane)	DELINEATOR SPACING (Taper)	DELINEATOR SPACING (Tangent)	SIGN SPACING (Advance of Taper & Between Signs)
25 MPH	150 Ft.	25 Ft.	50 Ft.	150 Ft.
30 MPH	200 Ft.	30 Ft.	60 Ft.	200 Ft.
35 MPH	250 Ft.	35 Ft.	70 Ft.	250 Ft.
40 MPH	350 Ft.	40 Ft.	80 Ft.	350 Ft.
*45 MPH	550 Ft.	45 Ft.	90 Ft.	550 Ft.
*50 MPH	600 Ft.	50 Ft.	100 Ft.	600 Ft.
*55+MPH	1000 Ft.	50 Ft.	100 Ft.	1000 Ft.

*Note: See Section 8 for high speed situations.

CLOSING OF HALF - ROADWAY OR OFF - SITE DETOUR

NOTE
IF CLOSURE IS IN EFFECT OVERNIGHT, CONTACT AGENCY

Shell Beach Road (Northbound ↑)

APPENDIX H

SAMPLE SETTLING TANK LAYOUT DETAIL

Typical Baker Tank Details

No Scale, Job No. 06-050, 9/22/10

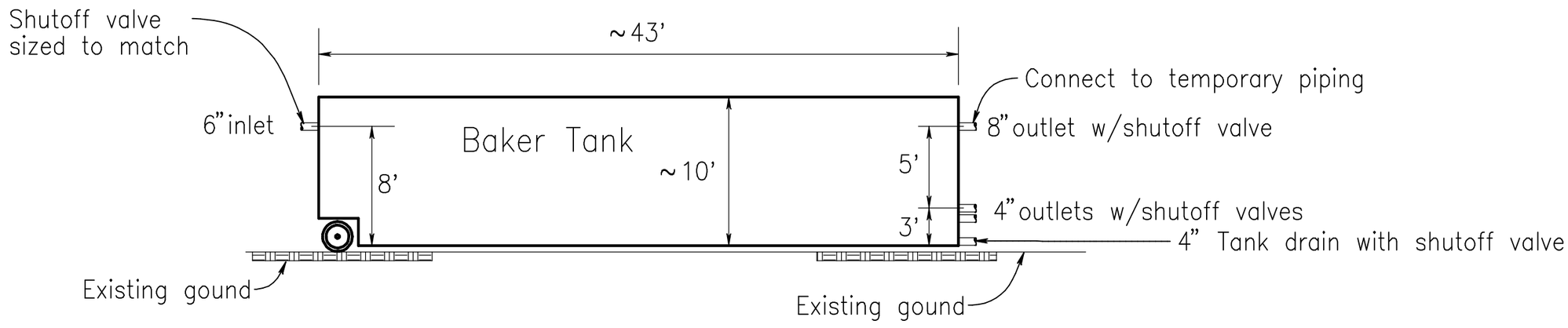

Typical Baker Tank Elevation

All inlets and outlets with shutoff valves to match (typ.)

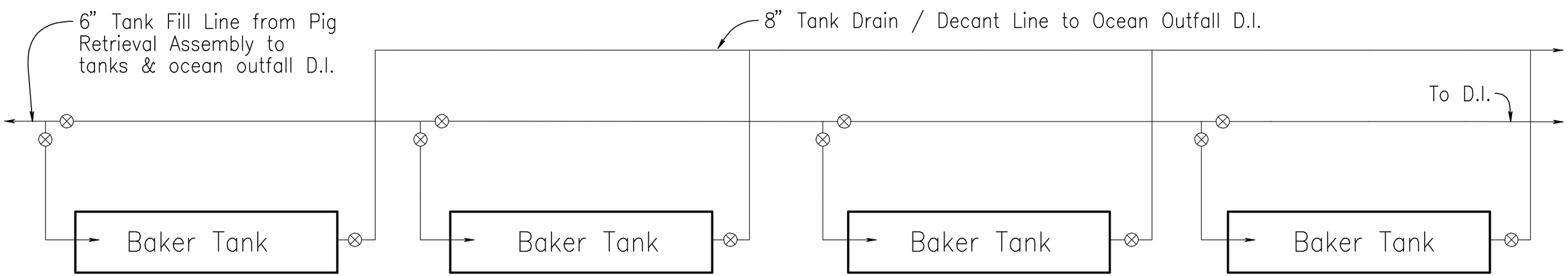

Example of Baker Tank Layout In Series

Note: Four tanks are shown for illustration purposes. The contractor will propose actual number of tanks, filters, pumps & other equipment needed.

APPENDIX I

PIPELINE DEPOSIT ANALYSIS TECHNICAL MEMORANDUM

TECHNICAL MEMORANDUM

MONTGOMERY WATSON

To:	Carmen Fojo County of San Luis Obispo	**Date:**	June 5, 2000
From:	Issam Najm Ph.D., P.E.	**File No.:**	1148862
Reviewed by:	Rhodes Trussell, Ph.D., P.E. Vernon Snoeyink, Ph.D.		
Prepared by:	Thomas Gillogly, Ph.D.		
Subject:	Investigation of Deposit Formation in the Lopez Water Distribution System		

The County of San Luis Obispo (County) has observed a decrease in flow capacity of the Lopez Water Distribution System. Initial testing suggested that this loss of capacity might be due to a deterioration of the distribution pipeline's interior walls. Samples collected from the distribution system in September and December of 1999 revealed the presence of a wavy deposit approximately 0.25 inches thick with the consistency of "thick, beige pudding."

Montgomery Watson, assisted by Professor Vernon Snoeyink (University of Illinois), conducted a one-day visit to the County on April 19, 2000. The primary goal of the visit was to assist the County in determining if the beige deposit was of sufficient magnitude to explain the capacity loss, identifying possible methods for removing the deposit and in identifying possible solutions to prevent its future formation. This memorandum presents a description of the observations made during the site visit, conclusions based on the observations and available analytical data, and Montgomery Watson's recommendations for future action.

Lackey Access Manway

Inspection of the distribution system deposit material was initially performed at the Lackey Access Manway (south side of West Branch Street, between Brisco Road and Rodeo Drive). This location provided access to a 30-inch diameter cement mortar lined portion of the distribution system via a flange within a vault. The vault was centered on a 10-foot section of pipe installed in 1987. Beyond this 10-foot section, the pipeline was believed to be undisturbed

Lackey Access Manway

in either direction since its installation in the late 1960's.

During the visit it was mentioned that at this point in the distribution system under normal operating conditions the linear velocity was 2.5 ft/sec with a pressure of approximately 72 psi.

Initial inspection of the pipeline revealed a rippled surface beige to light-gray in color, with a tan coloration to the peaks of the ripples (Figure 1). The ridges, oriented perpendicular to the flow, were uniform in size around approximately 95 percent of the circumference of the pipe. The ridges at the bottom of the pipeline were less pronounced and did not have a tan coloration. Physical handling indicated that this rippled surface was comprised of a heterogeneous deposit. The primary matrix of the deposit was a soft, gelatinous material, beige to light-gray in color. Interspersed within this matrix were firm, white nodules with a wax-like texture, that comprised roughly 5 percent of the total deposit volume.

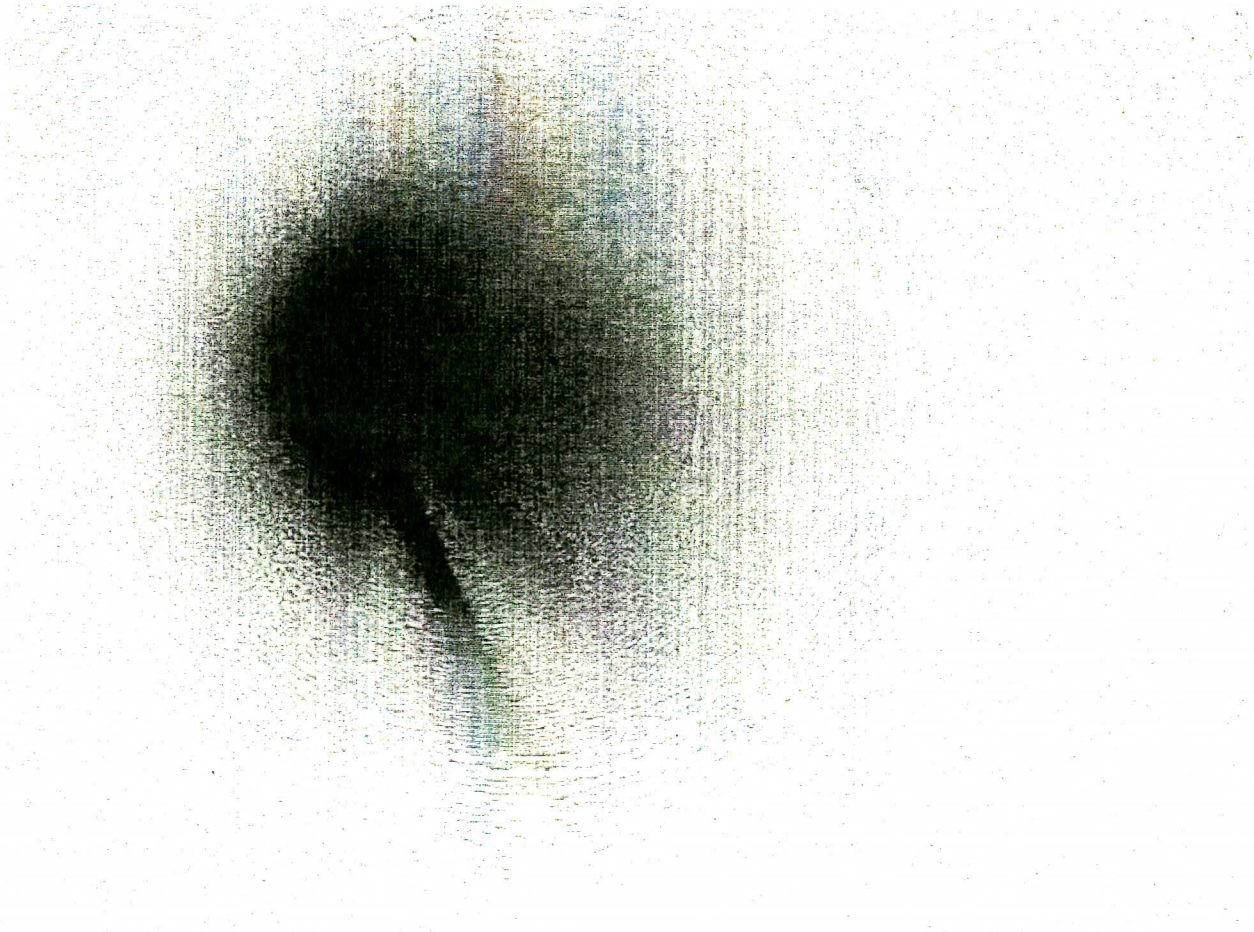

Figure 1: Deposit in Distribution System at Lackey Access Manway (Northwest View in 30-inch Diameter, Cement-Mortar Lined Pipe)

Oceano Lateral

Two additional inspections were performed in the Oceano Lateral portion of the distribution system. Access to the distribution system at each location was gained through excavation and removing a section of the pipeline. The pipeline at both locations was an 8-inch

diameter asbestos cement pipe. The first of the two Oceano Lateral sites was located at Elm Street and Fair Oaks Avenue. It was stated that the pipeline at this location was approximately 30 years old. The second Oceano Lateral section of pipeline was located at Pike and 19th Street and was reported to be approximately 20 years old.

Inspection of the pipeline at these locations revealed a deposit, visually similar to that observed in the Lackey Access Manway portion of the distribution system. In these smaller diameter pipelines, however, the deposit appeared to be evenly distributed around 100 percent of the internal pipe surface. Removal of the pipe sections at these locations provided the opportunity to examine cross-sections of the deposit. It was readily apparent at both locations that the deposit was actually comprised of two separate layers (Figure 2). The underlying layer (closest to the pipe wall) was a thin beige clay-like material. The overlaying layer was made up of the white particles observed in the Lackey Access Manway deposit intermixed with a soft, light-gray material. The surface of the overlaying layer was colored tan. The two layers of the deposit could be easily separated. (Note: as a representative cross-section of the Lackey Access Manway deposit was not collected, it is not known if the deposit was comprised of two layers.)

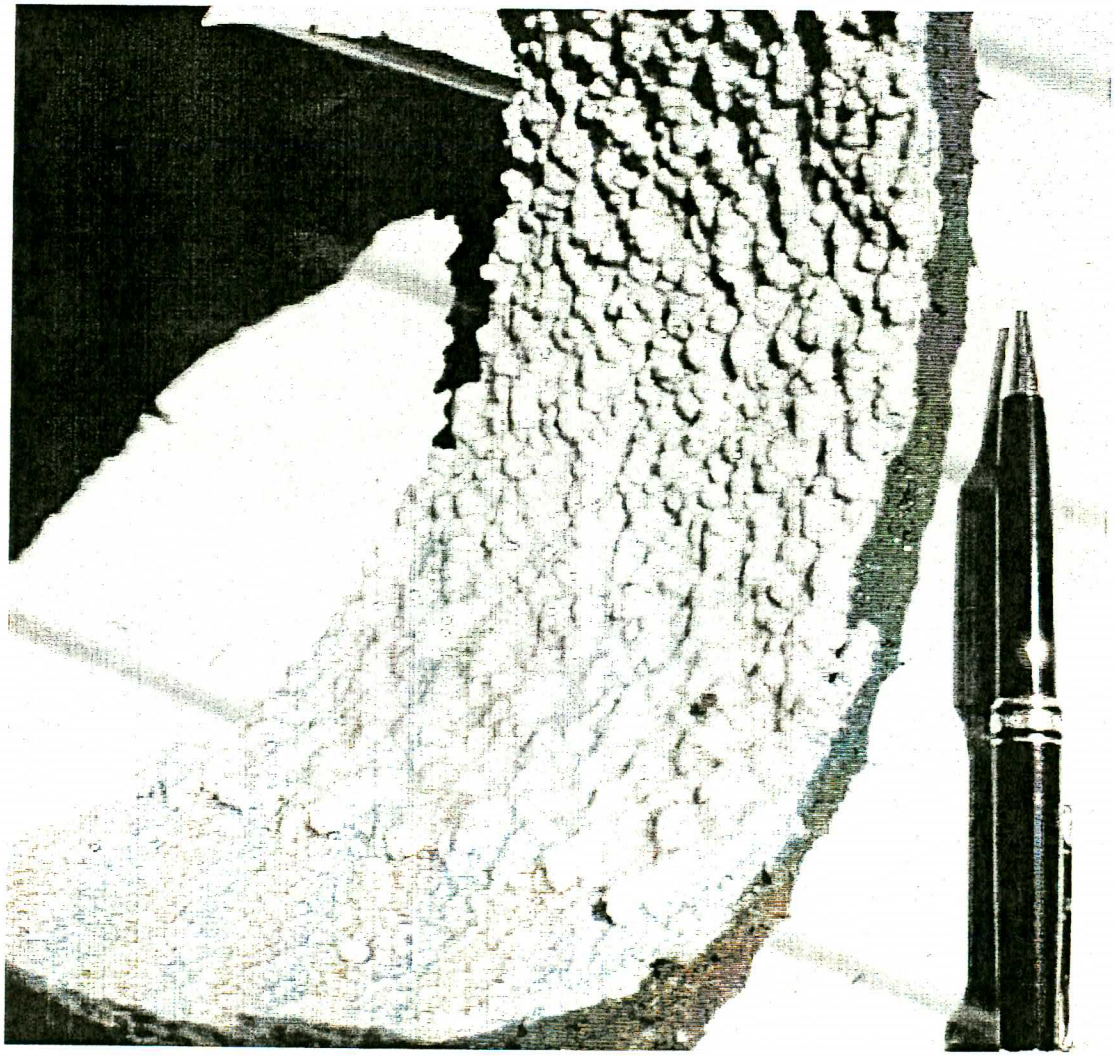

Figure 2: Layered Deposit in Oceano Lateral Pipeline (~30-Year Old, Asbestos Cement, 8-inch Diameter Pipe)

The major difference observed between the two Oceano Lateral deposits was their measured thickness (Table 1). In the older section of the distribution system both layers of the deposit were slightly thicker. Corresponding to the difference in thickness, the ridges in the 20 year old pipe (Figure 3) were less pronounced than the ridges in the 30 year old pipe. Figure 4 shows a side-by-side comparison of the pipeline sections removed from each Oceano Lateral inspection site.

Table 1: Oceano Lateral Distribution Pipeline Deposit Thickness

Location	Elm Street and Fair Oaks Avenue	Pike and 19th Street
Age	~30 yrs	~20 yrs
Deposit Thickness	0.20″	0.13″
Overlaying Layer	0.13″	0.06″
Underlying Layer	0.08″	0.06″

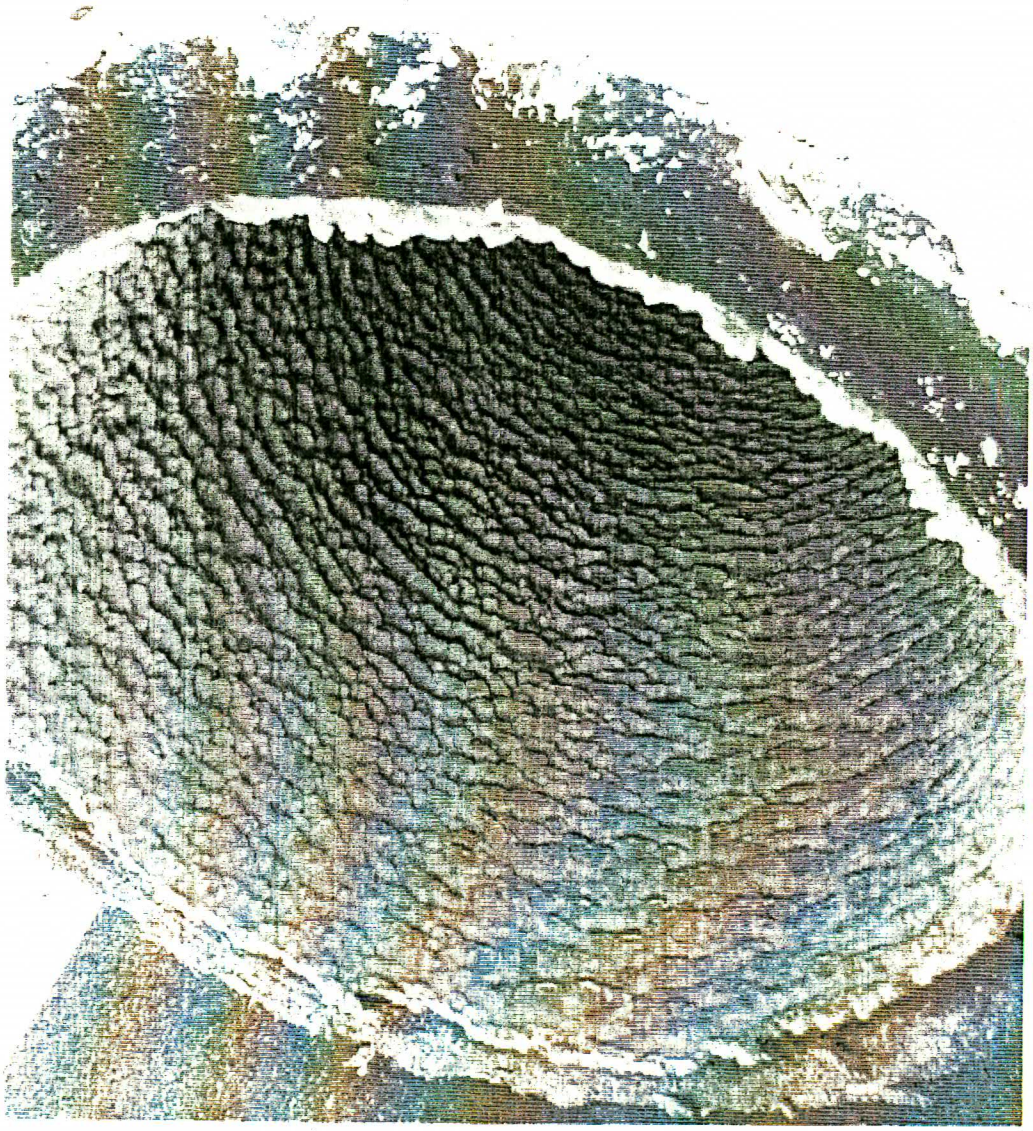

Figure 3: Deposit in Oceano Lateral Pipeline (~20-Year Old, Asbestos Cement, 8-inch Diameter Pipe)

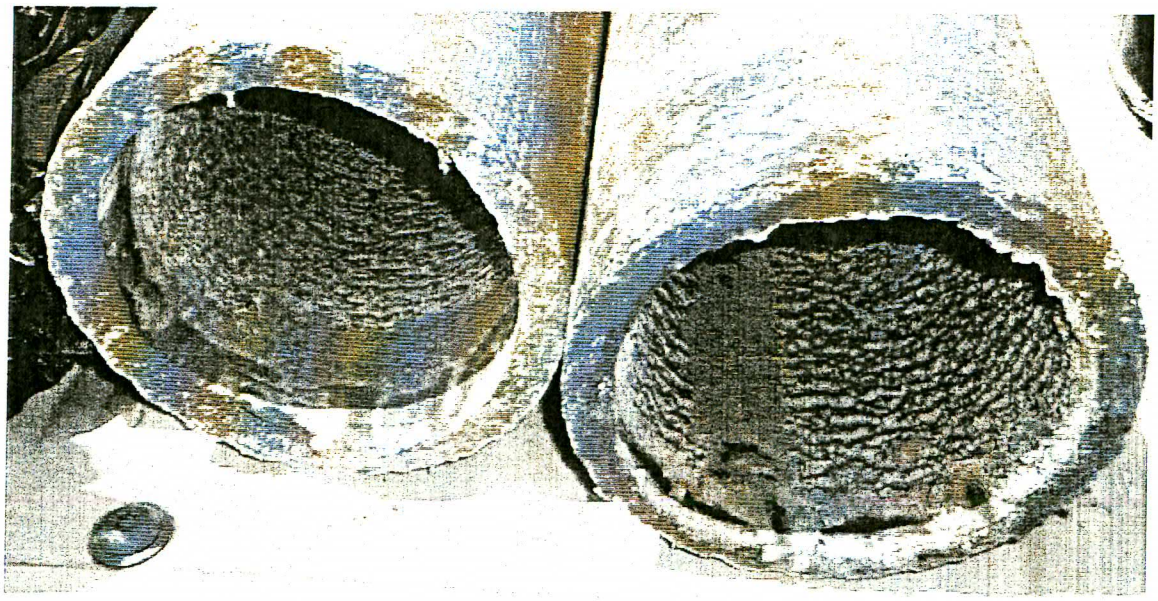

Figure 4: Comparison of Oceano Lateral Distribution System Deposits (8-Inch Diameter Asbestos Cement Pipe Sections; ~20 Years Old on Left, ~30 Years Old on Right)

Deposit Analysis

Based on the physical characteristics of this deposit, it is likely that this ridged deposition could increase the headloss through the pipeline by the 20 to 30 percent previously calculated by Navigant Consultants for the County. This magnitude of headloss increase could account for the measured decrease in flow capacity through the distribution system. In all three locations, both layers of the deposit were observed to be of a soft, gelatinous consistency, easily removed by gentle scraping. Due to the soft nature of the deposit, "Pigging[1]" would probably remove the deposit and eliminate its impact on the headloss.

Samples of the deposit were collected at each of the three distribution pipeline inspection sites to determine their composition and identify potential actions that might inhibit future formation. Both inductively coupled plasma atomic emission spectrometry (ICP-AES, or ICP)[2] and scanning electron microscope energy dispersive spectroscopy (SEM-EDS, or EDS)[3] were used to determine the relative abundance of selected elements within the

[1] Pigging is a process in which various devices, or "pigs", are hydraulically or pneumatically pushed through a pipeline to physically scour debris and deposits from the system.

[2] ICP is a multi-element analysis technique that uses an inductively coupled plasma source to dissociate the sample into its constituent atoms or ions, exciting them to a level where they emit light of a characteristic wavelength. A detector measures the intensity of the emitted light, and calculates the concentration of that particular element in the sample. This technique does not rely upon the presence of crystalline structures.

[3] EDS, also a multi-element analytical technique, utilizes a focused beam of electrons to raise the electrons of the sample to an excited state. As these excited electrons relax to a lower energy state, a characteristic X-ray is occasionally emitted and detected by the instrument. These characteristic X-rays can then be used to calculate the relative amount of each element detected. This technique does not rely upon the presence of crystalline structures.

deposit. Both of these independent analyses revealed that the two visually distinct deposit layers actually had the same basic composition (Table 2).

Table 2: Relative Atomic Abundance of Selected Elements

Sample	Overlaying Layer[a]	Underlying Layer[a]		Composite of Both Layers[b]	White Particles in Overlaying Layer[a]
Analysis	ICP[†]	EDS	ICP[†]	EDS	EDS
Element					
Silica	60%	60%	61%	61%	61%
Aluminum	23%	23%	23%	22%	22%
Calcium	8%	12%	8%	13%	13%
Magnesium	3%	2%	3%	2%	2%
Potassium	0.6%	1%	0.6%	1%	1%
Phosphorous	0.5%[‡]	2%	0.7%[‡]	1%	n.d.
Iron	0.1%	n.d.	0.1%	n.d.	n.d.

n.d. – not detected
[a] Oceano Lateral (Elm Street and Fair Oaks Avenue)
[b] Lackey Access Manway
[†] Relative atomic abundance adjusted for silica recovery
[‡] Determined by colorimetric analysis not ICP

A total volatile solids (TVS) analysis of a composite deposit sample (both layers together) determined that 22 percent of the "dried" mass was volatile in nature. A large fraction of this percentage may actually be comprised of chemically bound water that was not released under normal drying conditions.

X-ray diffraction (XRD)[4] was also used to determine the crystalline characteristics of the deposit. The analysis of each deposit layer, and the white particles found in the overlaying layer, indicated all of the samples were amorphous to XRD; no crystalline clays, calcite or quartz were detectable.

These values reported for the relative atomic abundance and TVS were consistent with analyses of a previously collected sample (September, 1999). For that sample it was reported that 28 percent of the deposit's "dry" mass was volatile. Also, a similar relative atomic abundance of silica, aluminum and calcium were measured by PIXIE[5] (62, 28 and 11 percent, respectively).

These relative elemental ratios and XRD results indicate that the deposit is probably, predominantly an amorphous aluminosilicate material. Some crystalline aluminosilicate materials are known to have physical characteristics (texture, bound water content) similar to the deposit found in the distribution system. It is also not uncommon to have other cations associated with these materials. Using data supplied by the County on the composition of the water in the distribution system, analyses using a chemical equilibrium modeling software program (MINEQL$^+$) showed that the water was supersaturated with

[4] XRD is an analytical technique used to characterize crystalline materials. For this analysis, X-rays are passed through a sample. As a characteristic of crystalline materials is their ability to diffract X-rays, a diffraction pattern of these X-rays results. The resulting diffractogram can then be used to identify the crystalline materials in the sample.
[5] Particle induced X-ray emission (PIXIE). Similar to EDS, PIXIE relies on alpha particles (He^{++}) and protons (H^+) to excite the sample. The resulting X-rays emissions from the sample's relaxing electrons are then used to calculate the relative amount of each element detected.

materials such as the clay kaolinite, and several other related aluminosilicates. Unfortunately, we cannot say that a mineral is precipitating just because it is supersaturated. However, this information does allow us to speculate about the type of material that is in the process of forming. As more time passes, a mineral species with a well-defined crystalline structure may appear, and then the substance could be determined with certainty.

Lopez Water Distribution System Water Quality

Currently the Lopez Water Distribution System is exposed to both water treated at the Lopez Water Treatment Plant (WTP) and imported State Project Water. The Lopez WTP draws its water from a 37-acre terminal reservoir (844 acre-foot storage capacity) fed by Lopez Lake, a 940-acre reservoir with a storage capacity of 51,8000 acre-feet. At design flows, the terminal reservoir has a theoretical hydraulic retention time of approximately 45 days. The treatment plant is a 6-MGD conventional water treatment plant with coagulation, flocculation, sedimentation, filtration and chloramination.

Within the past few years, significant operational changes may have altered the characteristics of the water within the distribution system. In 1989 the addition of ammonia to the effluent of the treatment plant to form chloramines was initiated. Also State Project Water was recently introduced (Fall 1997) into the distribution system to augment the Lopez Water Treatment plant production. In 1998 the primary coagulant used in the Lopez WTP was switched from alum to Sweetwater SW9311. SW9311 is a polymeric aluminum coagulant (aluminum chlorohydroxide) mixed with a cationic polymer [poly(dimethyl diallyl ammonium chloride) or poly(DADMAC)]. Analysis of this Sweetwater coagulant indicated an aluminum concentration of 56 g/L. These changes in water treatment and water qualities in the distribution system may have had an impact on the formation of the observed deposit.

The County has provided measured historical water quality trends to assist in the analysis of the deposit (Table 3). Based on the average values presented in Table 3, the Langelier Index (L.I.) and calcium carbonate precipitation potential (CCPP) for each set of data were calculated. These calculated values showed that these average waters should have the propensity to precipitate significant amounts of calcium carbonate. However, XRD analyses indicated no calcium carbonate was present in the deposit. It is not known why calcite has not formed in the distribution system.

It should be noted that the aluminum concentration in the Lopez treated water was observed to decrease to approximately 20 ug/L between October 1998 and November 1999, presumably due to the switch in coagulant. While this decrease may have been beneficial for the reduction of aluminosilicate formation, it was not possible to determine whether this was in fact the case.

Table 3: Lopez Water Distribution System Average Water Quality

Period	6/89-8/97		7/98-1/00		
Location	Lopez WTP		Lopez WTP		Pismo Beach*
	Raw	Treated	Raw	Treated	
Parameter					
Silica† (mg/L)	-	-	21	21	19
Aluminum (ug/L)	24	175	12	99	40
Calcium (mg/L)	81	81	80	79	65
Magnesium (mg/L)	38	37	32	31	26
Sodium (mg/L)	26	25	19	19	26
Sulfate (mg/L)	112	113	96	97	83
pH	8.2	7.9	8.1	7.9	8.0
Alkalinity (mg/L $CaCO_3$)	286	267	255	243	201
Hardness (mg/L)	359	350	329	325	270
Total Dissolved Solids (mg/L)	519	502	452	444	398
Temperature (°C)	18 (25-7)	20 (26-7)	16 (22-11)	18 (26-11)	18 (25-12)
Calculated Values‡					
Langelier Index	0.9	0.5	0.7	0.5	0.5
Calcium Carbonate Precipitation Potential (mg/L $CaCO_3$)	32	24	23	19	11

* This location is after State Project Water has been blended into the distribution system
† Only sampled on 2/22/00
‡ Based on averaged parameter values

Conclusions

Based on the inspection of the distribution pipeline at the Lackey Access Manway and two Oceano Lateral sites, a pervasive soft, gelatinous material has deposited throughout a significant portion of the distribution system. Additional inspection of the distribution system would be required to determine the extent of deposition. However, based on discussions with the County, it was indicated that the deposit might cover close to 100 percent of the distribution system pipeline. It is likely that a deposit of this nature could cause a headloss increase in the range of 20 to 30 percent.

Although this deposit is comprised of two visually distinct layers, analyses revealed these layers were made of the same material, probably an amorphous aluminosilicate. While it is believed that a change in the distribution system water quality may have resulted in the formation of the visually different layers, there is insufficient information to support this hypothesis. The chemical composition of the deposit and low ambient aluminum levels in the raw water indicate that if aluminum were eliminated from the treatment process at the Lopez WTP, the future formation of this deposit may be inhibited. Effective control of the deposition is not likely to be economically accomplished through a reduction of the ambient levels of silica present in the source waters.

Other water quality parameters, water treatment chemicals and environmental conditions may have either enhanced or retarded the formation of the deposit in the distribution system. The role of these various parameters, treatments and conditions on the historical formation of the deposit can not be determined with the existing information. Their impact on the subsequent formation of this aluminosilicate material can only be assessed through

additional detailed testing programs. However, it is felt that if one or more of the materials that comprise the deposit can be removed from the water, then the continued deposition of this particular material can be arrested.

Due to the physical characteristics of the deposit, Pigging would probably remove the deposit and eliminate its impact on headloss. It is believed that conventional line flushing would not achieve sufficient linear velocity to scour the deposit from the pipeline. Other techniques that could reliably remove the deposit are not readily evident. While modifications to the water treatment process at the Lopez WTP to effect changes in the distribution system water quality is likely to inhibit additional deposition, these changes would not be expected to remove the existing deposit.

Recommendations

Based on the findings of the site visit and analyses of the distribution system deposit, several recommendations are listed below to immediately improve the current situation and provide a future course of action:

Short-Term

- Perform a hydraulic analysis of the pipeline to determine where improving the Hazen-Williams Friction Coefficient (C-factor) would result in significant increases in the distribution flow capacity. It is likely that a storage reservoir, strategically placed in the distribution system, would also assist in reducing system capacity problems. It is recommended that this option be examined while the hydraulic analysis is being performed.
- Arrange to Pig those segments as soon as possible.
- Take advantage of Oceanos' plans to Pig their portion of the distribution system:
  - Perform field measurements of the C-factor before and after the deposit is removed;
  - Periodically remeasure the C-factor in the same pipeline segments to determine the rate at which the C-factor is deteriorating, or the rate at which the deposit is forming.

Long-Term

- Develop an alternative coagulation strategy to remove any aluminum addition from the water treatment process, without jeopardizing filtered water quality, and evaluate how these changes may impact future deposition within the distribution system. This must be carefully done because changes in quality may generate unintended secondary effects in the distribution system, such as a pH drop that might increase copper concentration at the tap, or initiation of calcium carbonate deposition in the distribution system.
- Initiate a testing program to evaluate the impact of water quality, chemical treatment, and hydraulic or environmental conditions on the rate of deposition.
- Form a long-term plan to provide adequate access to the pipeline so that it can be cleaned along its entire length.

APPENDIX J

SAN LUIS OBISPO COUNTY PROCEDURAL MEMORANDUM O-3
WATERLINE DISINFECTION PROCEDURES

NK

SAN LUIS OBISPO COUNTY
DEPARTMENT OF PUBLIC WORKS
Noel King, Director

County Government Center, Room 207 • San Luis Obispo CA 93408 • (805) 781-5252
Fax (805) 781-1229 email address: pwd@co.slo.ca.us

July 15, 2002

PROCEDURAL MEMORANDUM 0-3 (Revised)

TO: Division Heads
Hydraulics Personnel

FROM: Director of Public Works NK 7/17/02

SUBJECT: Waterline Disinfection Procedures

The following memorandum outlines the revised procedures to be followed by laboratory personnel, water operators, inspectors and contractors for the disinfection and testing of new waterline extensions and/or water mains. This procedure is an extraction from the American Waterworks Association (AWWA) Standards for Disinfecting Water Mains (C651-99) and the new drinking water requirements from the California Department of Health Services. **Note: This Memorandum should be included in specifications for all waterline projects.**

This standard presents essential procedures for disinfecting new and repaired water mains, including installation of fire hydrants. All new water mains shall be disinfected before they are placed in service. All water mains taken out of service for inspection, repair, or other activities that might lead to contamination of water shall be disinfected before they are returned to service. Additionally, steps shall be taken to prevent contaminated materials from entering the water main during storage, construction, or repair.

Any activity associated with this procedure that may disrupt or affect the overall water system in regard to: system pressure, water supplied to consumers, contamination of existing lines, or other major events must be cleared through the Water Quality Manager prior to commencing that activity.

BASIC DISINFECTION PROCEDURE

The basic disinfection procedure shall be:

1. Inspect all materials to be used to insure the integrity of the materials.

2. Prevent contaminating materials from entering the water main during storage, construction, or repair and noting potential contamination at the construction site.

3. Remove, by flushing, those materials that may have entered the water main.

4. Chlorinate any residual contamination that remains in the new water main using the "continuous-feed" method as described below. Note that "tablet/granule" and "slug" methods are no longer acceptable.

Before the main is chlorinated, it shall be filled to remove air pockets and flushed to remove particles. The flushing velocity in the main shall not be less than 2.5 ft/s.

Water supplied from a temporary backflow-protected connection to the existing distribution system or other approved supply source shall flow at a constant metered rate into the newly installed water main. The point of entry shall not be more than 5 feet from the beginning of the new line.

Liquid Sodium hypochlorite solution conforming to ANSI/AWWA B300 standards shall be fed at or before the entry point in an amount sufficient to produce not less than 25 mg/L of free chlorine residual throughout the new main and its appurtenances. Chlorine application shall not cease until the entire main is filled with the heavily chlorinated water.

The chlorinated water shall be retained in the main for a minimum of 24 hours, during which time all valves and hydrants in the treated section shall be operated to ensure disinfection of the appurtenances. At the end of the 24 hour period, the treated water in all portions of the main shall have a free chlorine residual of not less than 10 mg/L.

FINAL FLUSHING

1. Clear the main of heavily chlorinated water. After a 24-hour retention period, heavily chlorinated water should not remain in prolonged contact with pipe. In order to prevent damage to the pipe lining or to prevent corrosion damage to the pipe itself, the heavily chlorinated water shall be flushed from the main fittings, valves, and branches until chlorine measurements show that the concentration in the water leaving the main is not higher than that generally prevailing in the distribution system or acceptable for domestic use (typically 2ppm).

2. Dispose of heavily chlorinated water. The environment to which the chlorinated water is to be discharged shall be inspected. If there is any question that the chlorinated discharge will cause damage to the environment, then a neutralizing chemical shall be applied to the water to be wasted to neutralize thoroughly the chlorine residual remaining in the water. Where necessary, Federal, State and local regulatory agencies should be contacted to determine special provisions for the disposal of heavily chlorinated water.

BACTERIOLOGICAL TESTS

1. **Standard conditions.** After final flushing and before the new water main is connected to the distribution system, two consecutive sets of acceptable samples, taken at least 24 hours apart, shall be collected from the new main. At least one set of samples shall be collected from every 1,200 ft of the new water main, plus one set from the end of the line and at least one set from each branch. All samples shall be tested for bacteriological (chemical and physical) quality in accordance with Standard Methods for the Examination of Water and Wastewater; and shall show

the absence of coliform organisms. A standard plate count and general physical analysis (odor, turbidity, color) are also required.

2. **Sampling procedure.** Samples for bacteriological analysis shall be collected by Water Treatment Operators or laboratory personnel in sterile bottles with sodium thiosulfate as required by Standard Methods for the Examination of Water and Wastewater. No hose or fire hydrant shall be used in collection of samples. A combination blow off and sampling tap for mains up to including eight-inch diameter may be used as corporation stop that is installed in the main with a copper-tube gooseneck assembly. After samples have been collected, the gooseneck assembly may be removed and retained for future use. Each sample site must be positioned so that it may be flushed for several minutes (during sampling) without contamination of the hose bib, sample bottles, etc. when samples are being taken.

3. **Notification procedure.** Initial arrangement for scheduling sampling of new/repaired main shall be made with the Water Quality Manager. The Water Quality Manager will arrange sampling dates and time with the Water System Operator in charge of the effected system. The Water System Operator shall notify the Engineering Inspector of the time and particular location that samples are to be taken. The Inspector shall insure that the Contractor in charge of the line has installed adequate sampling stations (see attached drawing) on the days that samples are to be taken.

   Once it has been determined that all bacteriological and general physical analysis meet current requirements, the Water Quality Manager shall notify the in-charge Water System Operator of the same. The Operator shall in turn notify the Engineering Inspector in charge of the job. It shall be the Inspector's responsibility to notify the contractor/property owner of the test results.

   If the test results do not meet current requirements, the same notification procedure as outlined above shall be followed. Once the contractor/property owner has been notified it shall be his responsibility to perform the following (as determined by the Water Quality Manager): flush the line, re-chlorinate the lines (for a period of 24 hours), flush to an acceptable chlorine residual level, have the line re-sampled.

4. **Analysis Charges.** Unless otherwise stated in the construction contract, the cost of the initial sampling and analysis shall be paid by the contractor/property owner. In the event that follow-up analyses are required due to failed tests, the contractor/property owner will be liable for all costs associated with the follow-up sampling and analysis.

Attachment

File: Procedural Manual

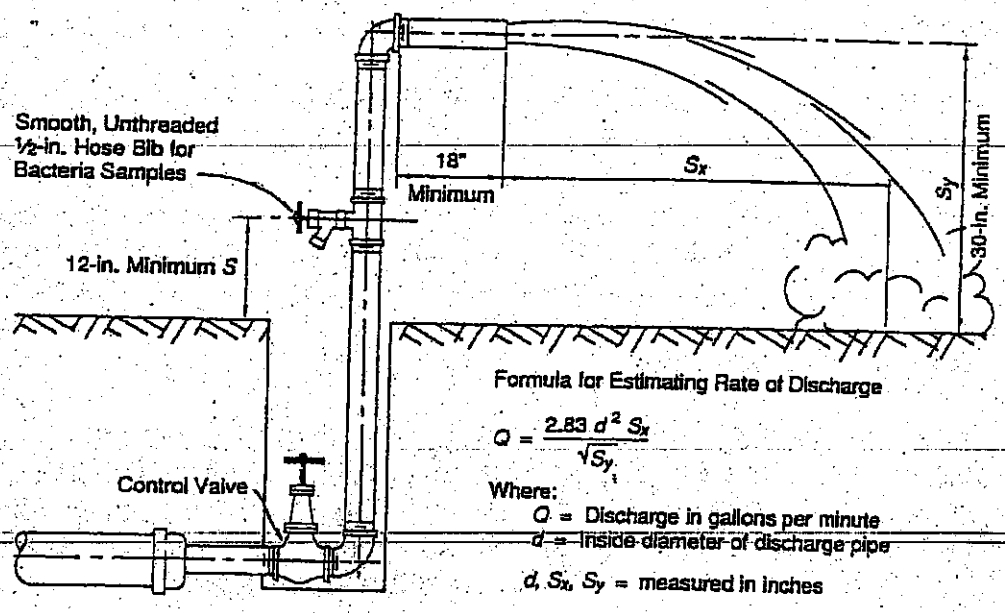

Formula for Estimating Rate of Discharge

$$Q = \frac{2.83\, d^2\, S_x}{\sqrt{S_y}}$$

Where:

Q = Discharge in gallons per minute

d = Inside diameter of discharge pipe

d, S_x, S_y = measured in inches

NOTE: This figure applies to pipes up to and including 8-in. (200 mm) diameter.

APPENDIX K

WASTE DISCHARGE REQUIREMENTS
GENERAL PERMIT FOR LOW THREAT DISCHARGES

CALIFORNIA REGIONAL WATER QUALITY CONTROL BOARD
CENTRAL COAST REGION
895 Aerovista Place, Suite 101
San Luis Obispo, CA 93401-7906

ORDER NO. R3-2006-0063
NPDES NO. CAG993001

WASTE DISCHARGE REQUIREMENTS GENERAL PERMIT For DISCHARGES WITH LOW THREAT TO WATER QUALITY

The California Regional Water Quality Control Board, Central Coast Region (hereafter Central Coast Water Board), finds:

1. **Purpose of Order** - This Region-wide General NPDES Permit for Discharges With Low Threat to Water Quality (General Permit) authorizes the discharge of wastes meeting the criteria specified in Finding 2 of this General Permit to waters of the United States by any person, partnership, firm, corporation, association, trust estate, or any other legal entity (hereafter Discharger). Low threat discharges are discharges containing minimal amounts of pollutants and pose little or no threat to water quality and the environment.

2. **Enrollment Criteria** - To be authorized by this General Permit, discharges must meet the following criteria:

   a. Pollutant concentrations in the discharge do not (a) cause, (b) have a reasonable potential to cause, or (c) contribute to an excursion above any applicable water quality objectives, including prohibitions of discharge.

   b. The discharge does not include water added for the purpose of diluting pollutant concentrations.

   c. Pollutant concentrations in the discharge will not cause or contribute to degradation of water quality or impair beneficial uses of receiving waters.

   d. Pollutant concentrations in the discharge shall not exceed the limits in Attachment D of this Order unless the Executive Officer determines that the applicable water quality control plan (i.e., Ocean Plan and/or State Implementation Policy) does not require effluent limits (Application Requirement A.9 of this Order).

   e. The discharge shall not cause acute or chronic toxicity in

receiving waters.

f. The discharger shall demonstrate the ability to comply with the requirements of this General Permit.

3. **Examples of Low Threat Discharges to Inland Surface Waters, Enclosed Bays, and Estuaries** - The following are examples of categories of low threat discharges to inland surface waters, enclosed bays, and estuaries of California that may be authorized by this General Permit, provided discharges meet the criteria specified in Finding 2. This is not a complete list of discharges eligible for consideration of coverage under this General Permit:

   a. Discharges associated with water supply well installation, development, test pumping and purging;

   b. Discharges resulting from the maintenance of uncontaminated water supply wells, pipelines, tanks, etc.;

   c. Discharges resulting from hydrostatic testing of water supply vessels, pipelines, tanks, etc.;

   d. Discharges resulting from the disinfection of water supply pipelines, tanks, reservoirs, etc.;

   e. Discharges from water supply systems resulting from system failures, pressure releases, etc.;

   f. Discharges from fire hydrant testing or flushing;

   g. Commercial cooling tower water;

   h. Evaporative condensate;

   i. Swimming pool and landscape drainage; and

   j. Other low-threat discharges not covered by: the Construction Activities Storm Water General Permit (construction storm water permit, which covers all sites that disturb at least one acre of soil or whose projects are part of a larger common plan of development that in total disturbs one or more acres); Industrial Activities Storm Water General Permit, Caltrans Statewide General Permit (industrial storm water permit) or Statewide General NPDES Permit for Discharges from Utility Vaults and Underground Structures. All discharges subject to these statewide permits are ineligible for coverage under this General Permit.

   k. Other similar types of wastes that pose a low threat to water quality yet require a NPDES permit.

The U.S. Environmental Protection Agency (U.S. EPA) and State Water Resources Control Board (State Water Board) classify these discharges as minor discharges. These discharges may be treated and discharged on either a continuous or a batch basis. For discharges from construction sites smaller than one acre that are part of

a larger common plan of development or that may cause significant water quality impacts, dischargers must seek coverage under the construction storm water permit or an individual NPDES permit.

4. **Examples of Low Threat Discharges to Ocean Waters** – In addition to those listed in Finding No. 3, the following examples of categories of low threat discharges to ocean waters of California that may be authorized by this General Permit, provided discharges meet the criteria specified in Finding 2. This is not a complete list of discharges eligible for consideration of coverage under this General Permit:

   a. Brine from small desalination facilities;
   b. Discharge of seafood processing wash water; and
   c. Discharge of treated bilge water from small watercraft.

5. Discharges with low threat to water quality generally have low flows. For continuous discharges, the following guidelines generally define low flows:

Table 1
Low Threat Continuous Discharge Guidelines

Type of Continuous Discharge	Maximum Daily Flow (MGD)
Cooling Water	0.1
Evaporative Condensate	0.1
Desalination Brine	0.05
Other Low Threat Discharges	0.05

6. For intermittent or one time discharges, the following guidelines generally define low threat discharges with low flow volumes:

Table 2
Low Threat Intermittent Discharge Guidelines

Type of Intermittent or One-Time Discharge	Max Daily Flow (MGD)	Duration
Supply well installation, development, test pumping and purging	0.25	1 Month
Maintenance, hydrostatic testing, disinfection, and pressure releases from water supply wells, pipelines, tanks, reservoirs, etc.	0.25	3 Months
Fire hydrant testing or flushing	0.25	2 Months
Landscape and Swimming Pool Water	0.025	1 Month
Hydrostatic Tank and Pipe Test Water	0.25	3 Months
Construction Dewatering for sites less than 1-acre and are not part of a larger common construction plan	0.1	1 Year
Other Low Threat Discharges	0.05	6 Months

7. Discharges that qualify for the State Implementation Plan's Categorical Exceptions are considered low threat to water quality. These discharges include discharges associated with resource or pest management (i.e.,

vector or weed control, pest eradication, or fishery management) conducted by public entities or mutual water companies to fulfill statutory requirements, including, but not limited to, those in the California Fish and Game, Food and Agriculture, Health and Safety, and Harbors and Navigation codes; or associated with drinking water conducted to fulfill statutory requirements under the federal Safe Drinking Water Act or the California Health and Safety code.

8. This General Permit meets the requirements of 40 CFR 122.28(a)(2)(ii). The categories of waste discharge permitted under this order:

   a. Involve similar threats to water quality;

   b. Discharge similar type of wastes;

   c. Require similar effluent limitations;

   d. Require similar monitoring; and

   e. Are more appropriately controlled under a general permit than individual permits.

9. **Benefits of a General Permit** – To date, 78 dischargers have been authorized to discharge wastewater under the General Permit and 47 dischargers are still actively enrolled. Many of these authorized dischargers will choose to continue their coverage under the General Permit. Approximately eight to ten new applications for coverage under the General Permit are received each year. Streamlining the permitting process through this General Permit has resulted in the appropriate regulation of many low threat wastewater discharges. Renewal of this General Permit is necessary for the appropriate regulation of multiple low threat wastewater discharges in the Central Coast Region.

   The Central Coast Water Board may determine that a waste discharge eligible for authorization by this General Permit is more appropriately regulated under an individual NPDES permit, another general NPDES permit, or waste discharge requirements (WDRs). If an individual NPDES permit, or another general NPDES permit or WDRs is issued for a discharge, applicability of this General Permit for the discharge is immediately terminated on the effective date of the alternative permit.

   Changes to this General Permit, including the required State Implementation Policy monitoring, are applicable to Dischargers currently enrolled under the General Permit.

10. Special circumstances allow enrollees the benefit of submitting a single application for multiple qualifying low threat discharges within a specific groundwater basin or receiving water body. Subsequent new discharges from the existing entities may be added to the existing low threat permit at a future date by submitting a notice of intent (NOI) that indicates an "Additional Discharge to Existing Low Threat to Water Quality General Permit" and

provide the required information as stated in Section A, below.

RECEIVING WATER BENEFICIAL USES

11. **Surface Waters** - Existing and potential beneficial uses of surface waters in the Central Coast Region may include:

    a. Municipal and domestic supply;
    b. Agricultural supply;
    c. Industrial process and service supply;
    d. Groundwater recharge;
    e. Freshwater replenishment;
    f. Navigation;
    g. Hydropower generation;
    h. Water contact recreation;
    i. Non-contact water recreation;
    j. Commercial and sport fishing;
    k. Aquaculture;
    l. Cold and warm fresh water habitat;
    m. Inland saline water habitat;
    n. Estuarine habitat;
    o. Marine habitat;
    p. Wildlife habitat;
    q. Preservation of biological habitats of special significance;
    r. Rare, threatened or endangered species;
    s. Migration of aquatic organisms;
    t. Spawning, reproduction and/or early development;
    u. Shellfish harvesting; and
    v. Areas of special biological significance.

12. **Groundwater** - Many surface waters within the region recharge underlying groundwater basins. The existing and potential beneficial uses of groundwater within the Central Coast Region include:

    a. Municipal and domestic supply;
    b. Agricultural supply;
    c. Industrial process and service supply.

SOURCES OF REQUIREMENTS

13. **Basin Plan** - The Water Quality Control Plan, Central Coastal Basin (Basin Plan) was adopted by the Central Coast Water Board on September 8, 1994. The Basin Plan incorporates State Board plans and policies by reference and contains a strategy for protecting beneficial uses of surface and groundwaters throughout the Central Coast Region.

14. **Ocean Plan**: The State Water Board adopted the first "Water Quality Control Plan, Ocean Waters of California-California Ocean Plan" (Ocean Plan) in 1972 and have subsequently amended it in 1978, 1983, 1988, 1990, 1997, 2001, and 2005. The Ocean Plan contains water quality objectives and other requirements governing discharge to the Pacific Ocean. Water quality-based objectives or criteria contained in Table B of the Ocean Plan establish the General Permit ocean-only discharge criteria for pollutants. See Attachment D for Ocean Discharge Criteria limits.

15. Effluent limitations and toxic effluent standards established pursuant to Sections 301, 302, 304, and 307 of the Clean Water Act (CWA) and

amendments thereto are applicable to these discharges.

16. Federal regulations require effluent limitations for all pollutants that are or may be discharged at a concentration causing or having reasonable potential to cause, or contribute to in-stream excursions above narrative or numerical water quality standards.

17. **National Toxics Rule and California Toxics Rule.** On December 22, 1992 and May 18, 2000, U.S. EPA adopted the National Toxics Rule and the California Toxics Rule, respectively. These toxic rule regulations are codified in 40 CFR section 131.36 and section 131.38 respectively, and establish numeric criteria for priority toxic pollutants for California's inland surface waters, enclosed bays, and estuaries.

18. **State Implementation Policy.** On March 2, 2000, the State Water Board adopted the State Implementation Policy for Implementation of Toxics Standards for Inland Surface Waters, Enclosed Bays, and Estuaries of California. The State Implementation Policy establishes procedures to implement National Toxics Rule and California Toxics Rule water quality criteria as well as water quality objectives contained in the Basin Plan. The State Implementation Policy requires dischargers to submit sufficient data to determine the need for water quality-based effluent limits and establishes procedures for determining that need, and for calculating these effluent limits, when necessary.

    In accordance with the methodology of the State Implementation Policy, the lowest (most stringent) applicable water quality-based objective or criterion contained in the Basin Plan, the National Toxics Rule, and the California Toxics Rule, were compared to determine the General Permit water quality criteria for toxic pollutants. See Attachment D for Low Threat Water Quality Criteria.

REGULATORY CONSIDERATIONS

19. **Total Maximum Daily Load (TMDL)** – The Central Coast Water Board is currently developing and implementing TMDL's for many impaired water bodies in the Central Coast Region. Enrollees under this General Permit that discharge to these impaired water bodies may be required to collect discharge monitoring data applicable to developing appropriate future waste load allocations for the discharge.

20. **California Environmental Quality Act (CEQA)** - The action to renew this General Permit is exempt from the provisions of the California Environmental Quality Act (Public Resources Code Section 21000, et seq.), under California Code of Regulations, Title 14, Section 15301, since the renewal of the General Permit involves no expansion of the types of facilities covered under Order No. 01-119, and no relaxation of any applicable requirements. The

action to renew this General Permit is also exempt from the provisions of Chapter 3 of the California Environmental Quality Act in accordance with Section 13389 of the California Water Code. Finally, the renewal of this General Permit for existing and new low-threat discharges is exempt from CEQA in accordance with California Code of Regulations, Title 14, Section 15061(b)(3) which states that CEQA only applies to projects which have the potential for causing adverse environmental effects.

The State Implementation Policy authorizes Water Boards to grant Categorical Exceptions from meeting the priority pollutant criteria/objectives, if determined to be necessary to implement control measures regarding drinking water conducted to fulfill statutory requirements under the Safe drinking water Act or California Health and Safety Code. Generally, discharges of potable water are done to fulfill California Department of Health and Safety statutory requirements, and to ensure steady and safe drinking water supply to end-users. The potable water discharges under this permit are mostly intermittent, short duration, high flow discharges that comply with California Department of Health and Safety Maximum Contaminant Levels, for protection of human health. Therefore, potable well discharges as qualified under this permit have been determined to pose no significant threat to water quality and meet the conditions for categorical exception under State Implementation Policy. The Central Coast Water Board actions on issuing this permit for existing and new potable water discharges, and on the exceptions is exempt from CEQA in accordance with California Code of Regulations, Title 14, Section 15061 (b)(3) which states that CEQA only applies to projects which have the potential for causing adverse environmental effects.

To satisfy the Categorical Exception requirements of Section 5.3 of the State Implementation Policy, dischargers seeking enrollment under this General Permit will be required to submit project-specific information to the Executive Officer on the discharge and its water quality effects. The information required by the State Implementation Policy is presented in Section A.2 Application Requirements.

21. **Mandatory Minimum Penalties** - The Porter-Cologne Water Quality Control Act imposes mandatory minimum penalties for certain violations of this NPDES permit. California Water Code sections 13385 and 13385.1 require Water Boards to impose mandatory minimum penalties of $3,000 for each "serious violation" and for certain violations occurring four or more times in any period of six consecutive months. Violations of numeric or numerically expressed effluent limits, certain toxicity limitations, and certain reporting violations, are subject to mandatory minimum penalties.

22. **Anti-Backsliding** - 40 CFR Section 122.44(l) requires effluent limitations

for reissued NPDES permits be at least as stringent as the previous permit, unless certain grounds for "backsliding" apply. All changes to the effluent limitations in the General Permit were made in accordance with anti-backsliding provisions.

23. **Anti-Degradation** – The Central Coast Water Board has considered antidegradation pursuant to 40 CFR Section 131.12 and State Board Resolution No. 68-16, and finds that these low-threat discharges are consistent with those provisions.

24. **Water Code Section 13241.** This Order contains restrictions on individual pollutants that are not less stringent than required by the federal Clean Water Act. Collectively, this Order's restrictions on individual pollutants are not less stringent than required to implement the technology-based requirements of the Clean Water Act and the applicable water quality standards for purposes of the Clean Water Act. This Order also contains Groundwater Limitations (Section E) and Solid Waste Disposal requirements (Section F). These provisions are necessary to comply with applicable law. The Board finds that none of factors set forth in Water Code Section 13241 justify failure to comply with existing legal requirements.

GENERAL FINDINGS

25. **Monitoring and Reporting** – Monitoring and Reporting Program (MRP) No. R3-2006-0063 is part of this General Permit. The MRP requires routine effluent and receiving water monitoring to verify compliance with this General Permit and protection of water quality.

26. **Annual Fee** - The Threat to Water Quality and Complexity rating for this General Permit is 3-C. The annual fee associated with this permit is based upon this rating and subject to change. Therefore, applicants should contact the Central Coast Water Board staff for the current fee.

27. A permit and the privilege to discharge waste into waters of the state is conditional upon the discharge complying with provisions of Division 7 of the California Water Code and of the Clean Water Act (as amended or as supplemented by implementing guidelines and regulations) and with any more stringent effluent limitations necessary to implement water quality control plans, protect beneficial uses, and prevent nuisance. This Order shall serve as a NPDES Permit pursuant to Section 402 of the Clean Water Act. Compliance with this Order should assure the aforementioned conditions are met and prevent any potential changes in water quality due to the discharge.

28. **Public Notice** - On September 16, 2006, the Central Coast Water Board notified the public and interested agencies of its intent to issue general waste discharge requirements for low threat discharges, provided them with an opportunity to submit their written views and recommendations, and scheduled a public hearing.

29. **Public Hearing** - In a public hearing on December 1, 2006, the Central Coast Water Board heard and considered all comments pertaining to the General Permit and found this Order consistent with the above findings.

IT IS HEREBY ORDERED, pursuant to authority in Sections 13263 and 13377 of the California Water Code, all Dischargers shall comply with the following:

All technical and monitoring reports submitted pursuant to this Order are required pursuant to Sections 13267 and 13383 of the California Water Code. Failure to submit reports in accordance with schedules established by this Order, attachments to this Order, or failure to submit a report of sufficient technical quality to be acceptable to the Central Coast Water Board Executive Officer, may subject the Discharger to enforcement action pursuant to Sections 13268 and 13385 of the California Water Code.

Throughout these requirements, footnotes are listed to indicate the source of requirements specified. Requirement footnotes are as follows:

A = 1994 Central Coast Region Water Quality Control Plan (Basin Plan)
B = 40 CFR 122
C = 2005 Ocean Plan
D = 2005 Policy for Implementation of Toxics Standard for Inland Surface Waters, Enclosed Bays, and Estuaries of California

Requirements not referenced are based on staff's best professional judgment.

A. APPLICATION REQUIREMENTS

1. Dischargers satisfying the following criteria and criteria stated in Finding No. 2 of this Order are eligible for authorization to discharge by this General Permit, provided:

   a. The Discharger submits a complete NOI (Attachment A) and appropriate first annual fee for each discharge.

   b. The Discharger submits the following:

      1. A list of all chemicals (including Material Safety Data Sheets) added to the water and the concentration of such additives in the discharged effluent.
      2. Unless the discharge meets all requirements for a conditional exception (State Implementation Policy Section 5.3), or is solely an ocean surface water discharge as defined in the State Implementation Policy, the Discharger must provide certified analytical results of the effluent for Inland Surface Waters, Enclosed Bays, and Estuaries priority toxic pollutants listed in Attachment D as Chemical Constituents. These analyses are required to fulfill the requirements set forth in the California Toxics Rule to evaluate the potential

for water quality degradation and to establish effluent limits.

3. If the discharge is solely an ocean surface water discharge as defined in the State Implementation Policy, the Discharger must provide certified analytical results of the effluent for Ocean Discharge priority toxic pollutants listed in Attachment D as Chemical Constituents. These analyses are required to fulfill the requirements set forth in the Ocean Plan to evaluate the potential for ocean water quality degradation.

4. In addition to the requirements of (1) and (2) above, discharges to inland surface waters, enclosed bays, and estuaries must submit certified analytical results of a representative sample of the effluent for the following: **Total Chlorine, pH, Nitrate, Turbidity, and Total Dissolved Solids**.

5. In addition to the requirements of (1) and (3) above, discharges solely to ocean waters must submit certified analytical results of a representative sample of the effluent for the following: **Oil and Grease, Suspended Solids, Settleable Solids, Turbidity, pH, and Acute Toxicity**

6. In addition to the requirements of (1), (2), (3), and (5) above, flow through seawater systems with potential to contain fecal pollution must submit certified analytical results of a representative sample of the effluent for **Total Coliform**.

7. Certified analytical results of a representative sample of the receiving surface water at a point 50-feet upstream and 50-feet downstream from the point of discharge into the receiving water, or if access is limited, at the first point upstream and downstream which is accessible for the following constituents: **pH, temperature, color, turbidity, and dissolved oxygen**.

8. For proposed low threat discharges from a yet to be constructed facility, analytical results for similar existing systems, or anticipated results based on specific facility design, will be adequate for submittal with the NOI. As part of facility startup, the Discharger shall submit all analytical results required in Section A - Application Requirements of this Order.

9. If the effluent concentration of any constituent sampled under (2) or (3) above exceeds the applicable criterion listed in Attachment D, the Discharger may submit the reasonable potential analysis in Section 1.3 of the

State Implementation Policy or Appendix VI of the Ocean Plan, as applicable. If the Discharger elects not to submit the reasonable potential analysis, or if the Executive Officer determines that one or more constituents would require effluent limits, then the discharge is not eligible for coverage under this General Permit and the Discharger is required to obtain coverage under an individual permit or coverage by a different general NPDES permit. This provision only applies to effluent limits for priority toxic pollutants (State Implementation Policy) or Table B Water Quality Objectives (Ocean Plan). For Dischargers already enrolled in this permit, General Permit coverage shall continue until the Discharger receives an individual permit or enrolls under another applicable general permit. Authorization for coverage under this General Permit may be revoked in the event of violations of Receiving Water Limits, which includes not causing or contributing to water quality objective/criteria excursions.

2. If the Discharger is seeking an exception under Section 5.3 of the State Implementation Policy, the Discharger shall submit the following information and receive subsequent Executive Officer approval:

   a. A detailed description of the proposed action (i.e., draining water supply pipes, cleaning or maintenance of storm water conveyance systems, water supply well purging, etc.), including the proposed method of completing the action;

   b. A time schedule;

   c. A discharge and receiving water quality monitoring plan (before project initiation, during the project, and after project completion, with the appropriate quality assurance and quality control procedures);

   d. Completed CEQA documentation;

   e. Contingency plans;

   f. Identification of alternate water supply (if needed);

   g. Residual waste disposal plans;

   h. Evidence that the Discharger has notified potentially affected public and governmental agencies of the project.

   i. Upon completion of the project, the discharger shall provide certification by a qualified biologist that the receiving water beneficial uses have been restored.

3. The Discharger, upon request, submits any additional information the Central Coast Water Board determines is necessary to ascertain

whether the discharge meets criteria for authorization under this permit.

4. If the Discharger discharges wastewater to or from property not owned by the Discharger and/or is leased or rented by the Discharger, then a letter, signed by the property owner, authorizing the discharge of wastewater to or from his/her property shall be kept with the General Permit (See Standard Provision G.2), where it will be available to operating personnel. If the discharge is to a storm water conveyance system, then notification must be sent to the owner of the storm water conveyance system.

5. If the discharge exceeds 0.3 MGD and is longer than 6 months in duration or if the discharge qualifies for a State Implementation Policy Categorical Exception then, the Discharger shall submit a Contingency Plan to immediately address violations or threatened violations of water quality standards (as described in Standard Provision G.4 below).

6. After submittal of an NOI and first annual fee, the Discharger will receive one of the following:

   a. written authorization and effective date of permit coverage;

   b. request to submit an application and consideration for coverage under another general or individual permit; or

   c. written notification of exclusion (NOE) of enrollment under this General Permit.

7. In no case may the discharge occur until the applicant receives written confirmation of enrollment.

8. Authorization to discharge under this General Permit shall terminate upon receipt of a Notice of Termination (NOT) adoption of an individual permit, or coverage by a different general NPDES permit.

9. As of the effective date of Order No. R3-2006-0063, Dischargers covered under Order No. 01-119 shall be enrolled under Order No. R3-2006-0063. Such Dischargers must comply with all requirements of Order No. R3-2006-0063 beginning with the effective date. Dischargers who are reenrolled shall comply with all provisions of the reissued General Permit. The analytical results required by Section A - Application Requirements of this Order shall be submitted with the Discharger's next Annual Report or on the date(s) specified in the Monitoring and Reporting Plan.

B. DISCHARGE PROHIBITIONS

1. The discharge of any waste at a location or in a manner different from that described in the approved NOI or regulated by this General Permit is prohibited.

2. Discharge of waste that creates conditions of pollution or nuisance as defined in Sections 13050(l) and

13050(m) of Division 7 of the California Water Code is prohibited.

3. Discharge containing concentrations of pollutants in excess of applicable water quality objectives as stated in the Basin Plan and Attachment D is prohibited.

4. Discharge containing substances in concentrations toxic to human, animal, plant, or aquatic life is prohibited.[A]

5. Discharge of contaminated groundwater is prohibited.

6. Discharge to an Area of Special Biological Significance, unless in compliance with the California Ocean Plan, is prohibited.

7. The discharge shall cause no scouring or erosion at the point of discharge into the receiving waters.

C. EFFLUENT LIMITATIONS[1]

1. Effluent shall not have detectable chlorine residual greater than or equal to 0.02 milligrams per liter (mg/L).

2. Effluent shall not have measurable total dissolved solids greater than surface water and groundwater quality objectives [A].

3. Effluent shall not contain substances that:[A]

   a. Float or become floatable upon discharge.

   b. Form sediments that degrade aquatic life.

   c. Accumulate to toxic levels in surface waters, sediments, or biota.

   d. Significantly decrease the natural light to aquatic life.

   e. Result in aesthetically undesirable discoloration of the water surface.

4. If the discharge qualifies for a Categorical Exception in accordance with the State Implementation Policy as stated in Finding No. 7, then the discharge shall meet California Department of Health Services (DHS) Maximum Contaminant Levels (MCLs) for drinking water for protection of human health.[D]

5. Effluent discharged to ocean waters shall not contain constituents in excess of the limits for the respective constituents shown in Table 3 below:[C]

[1] Compliance shall be determined at a point after exit of facility or site boundaries but before wastewater mixes with any receiving water (i.e., surface water or ocean water).

Table 3
Discharge to Ocean Water Effluent Limits

Constituent	Unit	Monthly (30-day avg.)	Weekly (7-day avg.)	Max
Oil and Grease	mg/L	25	40	75
Suspended Solids	mg/L	--	--	60
Settleable Solids	ml/L	1.0	1.5	3.0
Turbidity	NTU	75	100	225
pH	units	between 6.0 to 9.0 at all times		

NTU = Nephelometric Turbidity Units
ml/L = milliliters per liter

D. RECEIVING WATER LIMITATIONS

The following narrative water quality objectives apply to all surface waters when surface waters are running, including wetlands, in the Central Coast Region. Receiving water quality is a result of many factors, some unrelated to the discharge. This permit considers these factors, and is designed to minimize the influence of the discharge in the receiving water.

<u>The discharge shall not cause:</u>

1. The following limits to be exceeded in the receiving water:[A]

Table 4
Discharge to Surface Waters and Wetlands Effluent Limits

Constituent	Maximum or Range
pH	Between 7.0 and 8.3 at all times, and not changed more than 0.5 units.[A]
Tem-perature	Maximum increase of 5°F above natural receiving water temperature.[A]
Color	Maximum increase of 15 units, or 10% above natural background color, whichever is greater.[A]

2. **Turbidity**:

Where natural turbidity[2] is…	The turbidity shall not be increased more than…
less than 25 NTUs	5 NTUs
between 25 and 50 NTUs	20%
between 50 and 100 NTUs	10 NTUs
greater than 100 NTUs	10%

3. **Dissolved Oxygen** - Dissolved oxygen concentrations to be depressed below 5.0 mg/L or median values to fall below 85% of saturation.[A]

4. **Biostimulatory Substances** - Biostimulatory substances in concentrations that promote aquatic

[2] "Natural Turbidity" shall be determined from receiving water samples taken upstream/upcurrent of the discharge point at a location free from controllable sources of pollution.

growths causing nuisance or adversely affecting beneficial uses.[A]

5. **Taste and Odor** - Taste or odor-producing substances in concentrations imparting undesirable tastes or odors to fish flesh or other edible products of aquatic origin, causing nuisance, or adversely affecting beneficial uses. [A]

6. **Oil and Grease** - Oils, greases, waxes, or other similar materials in concentrations resulting in a visible film or floating on the surface of the water or on objects in the water, causing nuisance, or otherwise adversely affecting beneficial uses.[A]

7. **Settleable Materials** - Settleable material in concentrations resulting in the deposition of material causing nuisance or adversely affecting beneficial uses.

8. **Floating Materials** - Floating material, including solids, liquids, foams, and scum, in concentrations causing nuisance or adversely affecting beneficial uses.[A]

9. **Suspended Materials** - Suspended material in concentrations causing nuisance or adversely affecting beneficial uses.[A]

10. **Toxicity** - Substances in concentrations toxic to human, plant, animal, or aquatic life, or produce detrimental physiological responses therein.[A]

11. **Radioactivity** - Radionuclides in concentrations deleterious to human, plant, animal or aquatic life; or result in the accumulation of radionuclides in the food web to an extent presenting a hazard to human, plant, animal or aquatic life.[A]

12. **Any Water Quality Standard Excursion** - The discharge shall not (a) cause, (b) have a reasonable potential to cause, or (c) contribute to an excursion above any applicable criterion or water quality objective for the receiving waters adopted by the Central Coast Water Board or the State Water Board or promulgated by U.S. EPA pursuant to Section 303 of the CWA.

E. GROUNDWATER LIMITATIONS

1. The discharge shall not cause constituent concentrations in the groundwater downgradient of the disposal area to exceed water quality objectives specified in the Basin Plan.[A]

2. The discharge shall not cause concentrations of chemicals and radionuclides in groundwater to exceed primary and secondary drinking water limits set forth in Title 22 of the California Code of Regulations.[A]

F. SOLID WASTE DISPOSAL

1. Collected screenings, sludges, and other solids removed from liquid wastes shall be disposed in a manner consistent with Title 27 of the California Code of Regulations (CCR)

and approved by the Central Coast Water Board Executive Officer.

G. STANDARD PROVISIONS AND REPORTING REQUIREMENTS

1. **Standard Provisions**: The Discharger shall comply with all Standard Provisions and Reporting Requirements for National Pollutant Discharge Elimination System Permits, included as Attachment E of this Order with the exception of A.16. Standard Provision A.16 requires annual reports to be submitted on January 30 of each year. Annual reporting for this General Permit will occur as stated in Monitoring and Reporting Program No. R3-2006-0063.

2. The Discharger shall comply with Monitoring and Reporting Program No. R3-2006-0063, included as Attachment B of this General Permit, and any revisions prescribed thereto by the Central Coast Water Board Executive Officer.

3. A copy of this General Permit shall be kept at the discharge facility for reference by operating personnel. Key operating and site management personnel shall be familiar with its contents.

4. If the discharge exceeds 0.3 MGD and is longer than 6 months in duration or if the discharge qualifies for a State Implementation Policy Categorical Exception then the Discharger shall develop a Contingency Plan. The Contingency Plan shall incorporate contingency measures to be implemented if the discharge violates water quality standards. Required information includes energy dissipation structures, erosion control measures, best management practices, and pollution prevention measures. In no case shall the discharge violate water quality standards or impair beneficial uses. The Water Board shall provide a public notice and comment period of at least 30 days, and the opportunity for interested persons to request a hearing, before approving the Contingency Plan.

5. In the event the Discharger wishes to terminate authorization under this General Permit, the Discharger shall submit a completed NOT, included with this General Permit as Attachment C.. Termination from coverage will occur on the date specified in the NOT, unless notified otherwise by the Central Coast Water Board. All discharges shall cease before the date of termination, and any discharges to surface waters on or after this date shall be considered in violation of the CWA unless covered by another NPDES permit.

6. In the event of any change in control or ownership of land or waste discharge facilities presently owned or controlled by the Discharger, the Discharger shall notify the succeeding owner or operator of the existence of this General Permit by letter, a copy of which shall be immediately forwarded to the Board along with a completed NOT.

7. The Discharger shall take all reasonable steps to prevent any discharge in violation of this permit.[B]

8. The Discharger shall at all times properly operate and maintain all facilities and systems of treatment and control (and related appurtenances) to achieve compliance with this permit. Proper operation and maintenance also includes adequate laboratory controls and appropriate quality assurance procedures. This provision requires the operation of backup or auxiliary facilities or similar systems when necessary to achieve compliance with the conditions of this permit.[B]

9. The Discharger shall furnish the Central Coast Water Board, within a reasonable time, any information that the Central Coast Water Board may request to determine compliance with this General Permit.

10. The Discharger shall allow the Central Coast Water Board or its authorized representatives to:[B]

    a. Enter upon the Discharger's premises where a regulated facility or activity is located or conducted, or where records pertinent to this permit are kept;

    b. Inspect and photograph any facilities, equipment (including monitoring and control equipment), practices, or operations pertinent to this permit;

    c. Have access to and copy any records pertinent to this permit; and

    d. Sample or monitor for the purposes of assuring permit compliance.

11. This permit is not transferable to any person except after notice to and approval by the Central Coast Water Board. The Central Coast Water Board may require reissuance or modification of the permit conditions to change the name of the Discharger and incorporate such other requirements as may be necessary to protect water quality.

12. Monitoring results must be based on analyses conducted according to test procedures under 40 CFR Part 136, approved under 40 CFR Part 136, or authorized by the Central Coast Water Board Executive Officer.

13. All reports, NOIs, other documents required by this permit, and other information requested by the Central Coast Water Board shall be signed by a person described below or by a duly authorized representative of that person.[B]

    a. For a corporation: by a responsible corporate officer such as: (a) a president, secretary, treasurer, or vice president of the corporation in charge of a principal business function; (b) any other person who performs similar policy or decision-making functions for the corporation; or (c) the manager of one or more manufacturing, production, or operating facilities if authority to sign documents has been assigned or delegated to the

manager in accordance with corporate procedures.

b. For a partnership or sole proprietorship: by a general partner or the proprietor.

c. For a municipal, state, federal, or other public agency: by either a principal executive officer or ranking elected official.

14. Any person signing a document under Section G.13 of the General Permit Standard Provisions makes the following certification, whether written or implied:[B]

"I certify under penalty of law this document and all attachments were prepared under my direction or supervision in accordance with a system designed to assure qualified personnel properly gather and evaluate the information submitted. Based on my inquiry of the person or persons who manage the system, or those persons directly responsible for gathering the information, the information submitted is, to the best of my knowledge and belief, true, accurate, and complete. I am aware there are significant penalties for submitting false information, including the possibility of fine and imprisonment for knowing violations."

15. If the Discharger monitors any constituent more frequently than required by the permit, the monitoring results shall be submitted.[B]

16. The Discharger shall immediately report any non-compliance potentially endangering public health or the environment. Any information shall be provided orally within 24-hours from the time the Discharger becomes aware of the circumstances. A written report shall also be submitted to the Central Coast Water Board Executive Officer within five (5) days of the time the Discharger becomes aware of the circumstances. The written report shall contain (1) a description of the non-compliance and its cause; (2) the period of non-compliance, including dates and times, and if the non-compliance has not been corrected, the anticipated time it is expected to continue; and (3) steps taken or planned to reduce, eliminate, and prevent reoccurrence of the non-compliance.[B]

17. The Discharger shall report all instances of non-compliance not reported under Standard Provision Section G.16 of the General Permit at the time monitoring reports are submitted. The reports shall contain the information listed in Standard Provision Section G.16.[B]

18. The Discharger shall give notice to the Central Coast Water Board as soon as possible of any planned alterations to the permitted facility that may change the nature or concentration of pollutants in the discharge.[B]

19. Violations of this General Permit may result in enforcement actions pursued under the following or other applicable authorities:

a. The CWA provides that any person who violates a permit condition implementing Sections 301, 302, 306, 307, 308, 318, or

405 of the CWA is subject to a civil penalty not to exceed $25,000 per day of violation. Any person who negligently violates permit conditions implementing Sections 301, 302, 306, 307, 308, 318, or 405 of the CWA is subject to a fine of not less than $2,500 nor more than $25,000 per day for each violation, to imprisonment of not more than one year, or to both penalties. Higher penalties may be imposed for knowing violations and for repeat offenders. The Porter-Cologne Water Quality Control Act provides for civil and criminal penalties comparable to, and in some cases greater than, those provided under the CWA.[B]

b. The CWA provides that any person who knowingly makes any false statement, representation, or certification in any record or other document submitted or required to be maintained under this permit including monitoring reports or reports of compliance or non-compliance shall, upon conviction, be punished by a fine of not more than $10,000 per violation, by imprisonment for not more than six (6) months per violation, or by both.[B] Section 13387 of the California Water Code allows for fines up to $25,000 per violation and imprisonment for up to two years after such violations.

c. The CWA provides any person who falsifies, tampers with, or knowingly renders inaccurate any monitoring device or method required to be maintained under this permit shall, upon conviction, be punished by a fine of not more than $10,000, by imprisonment for not more than 2 years, or by both. Higher penalties may be imposed for repeat offenders.

20. This General Permit expires on **December 1, 2011**. Those enrollees who are covered under this General Permit at the time of expiration will automatically be re-enrolled under the revised General Permit, unless a NOT is submitted to terminate coverage.

I, ROGER W. BRIGGS, Executive Officer, do hereby certify the foregoing is a full, true, and correct copy of an Order adopted by the California Regional Water Quality Control Board, Central Coast Region, on December 1, 2006.

Michael Thomas
Assistant Executive Officer

S:\NPDES\Low Threat Permit 2006-0063\General Permit 2006-0063.DOC

APPENDIX L

LOPEZ WATER SUPPLY PROJECT AS-BUILT PLANS

NOTE:
THESE PLANS ARE FOR REFERENCE ONLY. ALL BUTTERFLY VALVES SHOWN ON THESE PLANS HAVE BEEN REPLACED WITH GATE VALVES. SOME PORTIONS OF 18” STEEL PIPE HAS BEEN REPLACED WITH 18” C-905 PVC PIPE. PIGGING INSERTION TEE AND RETRIEVAL WYE ARE NOT SPECIFICALLY SHOWN ON THESE PLANS (SEE DETAILS IN APPENDIX B).

SAN LUIS OBISPO COUNTY FLOOD CONTROL AND WATER CONSERVATION DISTRICT

LOPEZ WATER SUPPLY PROJECT

WATER DISTRIBUTION SYSTEM-UNIT 3

SPECIFICATION NO. 0803-69-3

(H.U.D. NO. WS-6-05-0289)

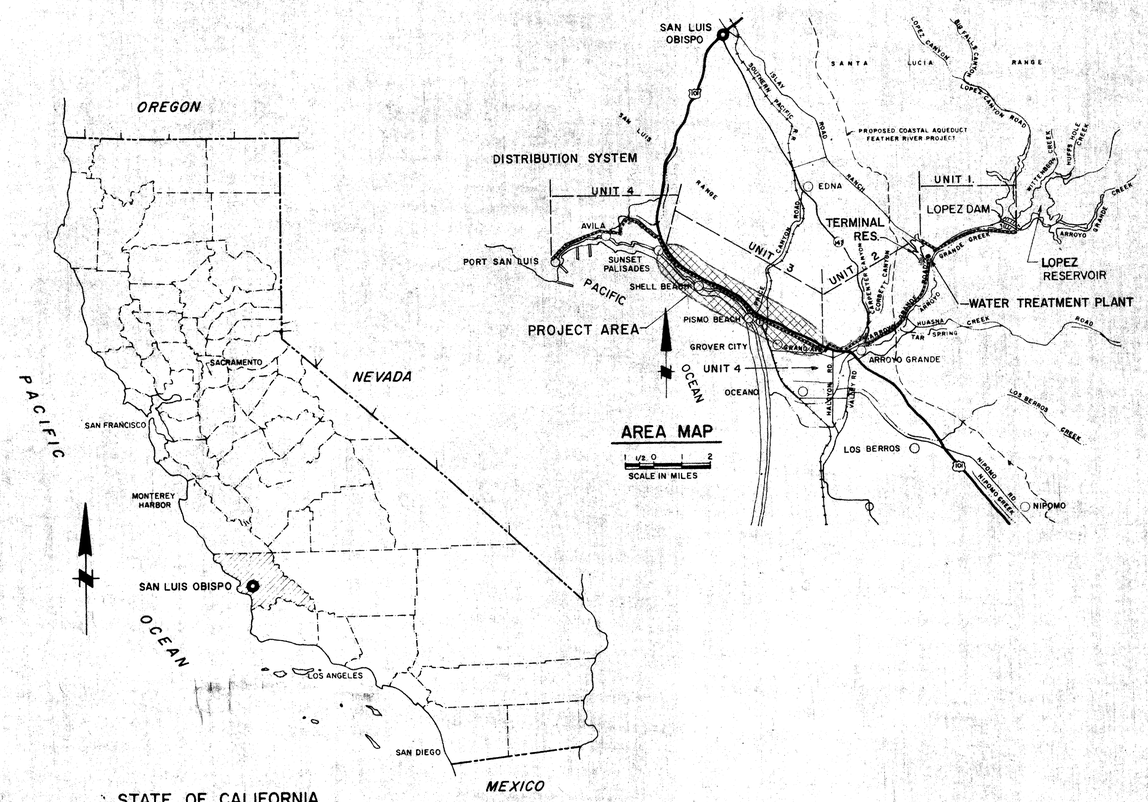

INDEX OF DRAWINGS

SHEET Nº	TITLE
1.	INDEX OF DRAWINGS AND VICINITY MAP
2.	GENERAL LOCATION MAP AND GENERAL NOTES
	PLAN AND PROFILE
3.	STATION 313+08 TO 325+00
4.	STATION 325+00 TO 338+00
5.	STATION 338+00 TO 351+05
6.	STATION 351+05 TO 364+00
7.	STATION 364+00 TO 377+05
8.	STATION 377+05 TO 390+05
9.	STATION 390+05 TO 403+05
10.	STATION 403+05 TO 416+10
11.	STATION 416+10 TO 429+05
12.	STATION 429+05 TO 442+10
13.	STATION 442+10 TO 455+05
14.	STATION 455+05 TO 468+15
15.	STATION 468+15 TO 481+25
16.	STATION 481+25 TO 494+65
17.	STATION 494+65 TO 507+60
18.	STATION 507+60 TO 519+70
19.	STATION 519+70 TO 531+70
20.	STATION 531+70 TO 543+05
21.	STATION 543+05 TO 555+85
22.	STATION 555+85 TO 568+80
23.	STATION 568+80 TO 582+00
24.	STATION 582+00 TO 594+45
25.	STATION 594+45 TO 607+40
26.	STATION 607+40 TO 620+55
27.	STATION 620+55 TO 633+60
28.	STATION 633+60 TO 646+70
29.	STATION 646+70 TO 659+90
30.	STATION 659+90 TO 672+95
31.	STATION 672+95 TO 686+00
32.	STATION 686+00 TO 697+00
33.	U.S. 101 & S.P. RAILROAD CROSSINGS, CASING PIPE DETAILS
34.	PIPELINE ACCESSORIES, MISCELLANEOUS DETAILS
	TYPICAL PAVEMENT SECTIONS
35.	STATION 313+08 TO 515+00
36.	STATION 515+00 TO 587+50
37.	STATION 587+50 TO 697+00
	METER STATIONS
38.	PLOT PLAN AND PIPING DETAILS
39.	STRUCTURAL DETAILS
40.	ELECTRICAL PLAN & LEGEND
41.	ELECTRICAL SCHEMATIC DETAILS
42.	GROVER CITY MAIN, PLAN & PROFILE, STA. 1+00 TO 15+15
43.	GROVER CITY MAIN, PLAN & PROFILE, STA. 15+15 TO 19+50

APPROVED BY: _____ DATE

CHAIRMAN OF THE BOARD OF SUPERVISORS OF THE SAN LUIS OBISPO COUNTY FLOOD CONTROL AND WATER CONSERVATION DISTRICT

PLANS PREPARED BY
KOEBIG & KOEBIG, INC.
ENGINEERING — ARCHITECTURE
PLANNING

DATE 10-19-68
BY R. G. Kleinberger RCE 10651

REV. NO.	DATE	REVISIONS	REV.	CKD	APP.
		AS CONSTRUCTED	WAF	PD	RWS

SAN LUIS OBISPO COUNTY FLOOD CONTROL AND WATER CONSERVATION DISTRICT

LOPEZ WATER SUPPLY PROJECT

WATER DISTRIBUTION SYSTEM-UNIT 3
INDEX OF DRAWINGS
AND VICINITY MAP

RECOMMENDED Richard A. Drake 10-21-68 DATE
COUNTY HYDRAULIC ENGINEER R.C.E. NO. 9614
APPROVED
DRAWN RWS TRACED WAF CHKD PD DRWG SHEET 1 OF 43

N614 E201

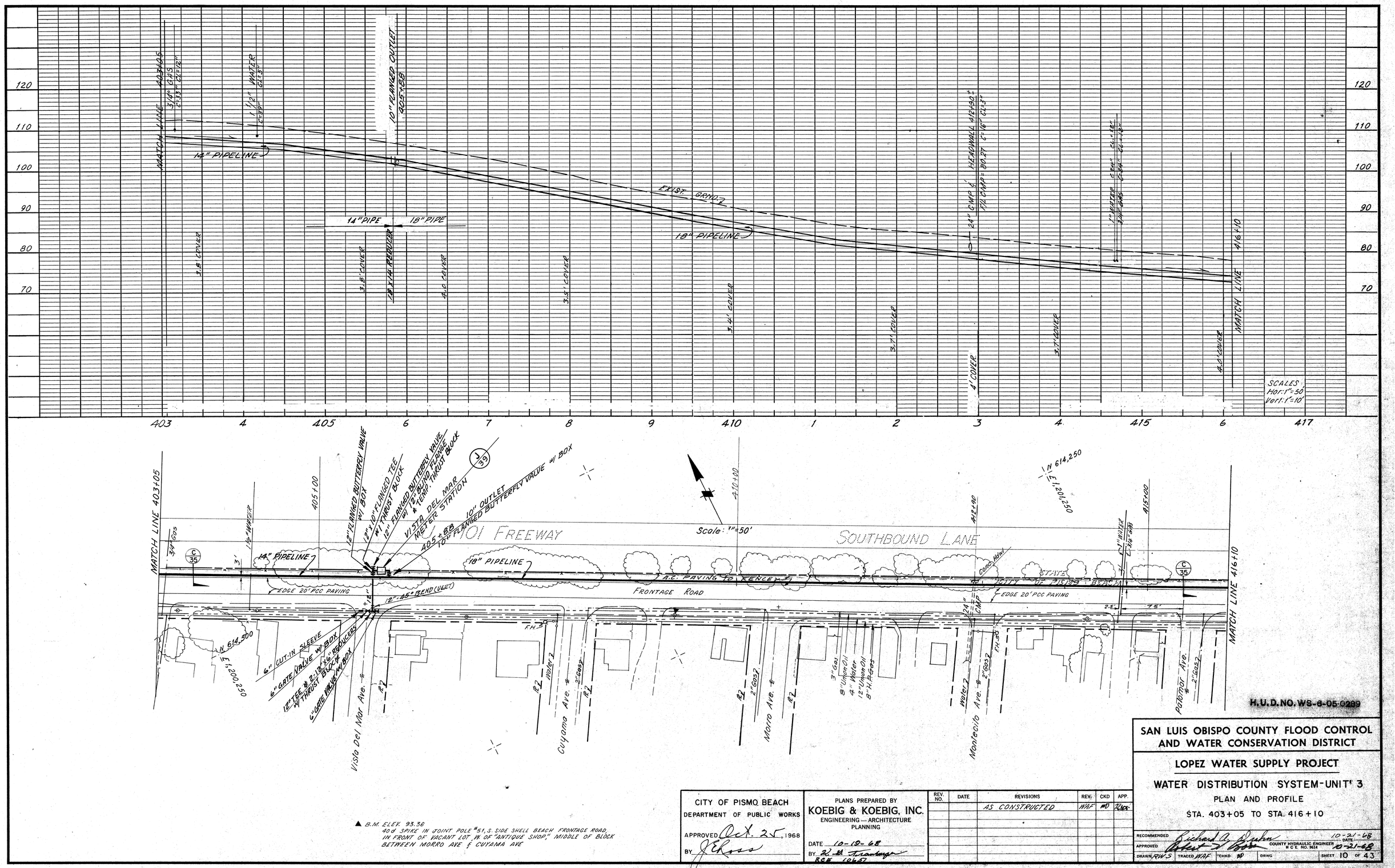

▲ B.M. ELEV. 93.36
40d SPIKE IN JOINT POLE #51, S. SIDE SHELL BEACH FRONTAGE ROAD, IN FRONT OF VACANT LOT W. OF "ANTIQUE SHOP," MIDDLE OF BLOCK BETWEEN MORRO AVE & CUYAMA AVE

H.U.D. NO. WS-6-05-0299

CITY OF PISMO BEACH DEPARTMENT OF PUBLIC WORKS	PLANS PREPARED BY KOEBIG & KOEBIG, INC. ENGINEERING — ARCHITECTURE PLANNING
APPROVED Oct. 25, 1968	DATE 10-18-68
BY J. E. Ross	BY R. H. Trautwein RCE 10687

REV. NO.	DATE	REVISIONS	REV.	CKD	APP.
		AS CONSTRUCTED	WAF	WD	RWS

SAN LUIS OBISPO COUNTY FLOOD CONTROL AND WATER CONSERVATION DISTRICT

LOPEZ WATER SUPPLY PROJECT

WATER DISTRIBUTION SYSTEM-UNIT 3

PLAN AND PROFILE

STA. 403+05 TO STA. 416+10

RECOMMENDED Richard A. Wilson DATE 10-21-68
APPROVED Robert J. Boss COUNTY HYDRAULIC ENGINEER R.C.E. NO. 9614 DATE 10-21-68
DRAWN RWS TRACED WAF CHKD WD DRWG SHEET 10 OF 43

10/66 DIETERICH-POST CLOTH