ROAD NO.	JOB NO.	SHEET NO.	TOTAL SHEETS
2088		1	4

COUNTY OF SAN LUIS OBISPO, CALIFORNIA
PUBLIC WORKS DEPARTMENT
DESIGN DIVISION

PLANS FOR IMPROVEMENTS OF LOS OSOS VALLEY ROAD BETWEEN RAVENNA AVE. and PALISADES AVE., LOS OSOS, CA.

To Be Supplemented By State Standard Plans Dated July, 2002

INDEX OF SHEETS

SHEET NO.	1	TITLE SHEET
SHEET NO.	2	PLAN AND PROFILE
SHEET NO.	3	DETAILS
SHEET NO.	4	STORM DRAIN PROFILES

APPROVED: March 23 ,20 04

DEPUTY DIRECTOR OF PUBLIC WORKS – ENGINEERING SERVICES
R.C.E. 30789 (Exp. 3–31–2006)

COUNTY SURVEYOR'S STATEMENT

This map has been examined in accordance with Section 8766 of the Land Surveyor's Act this 23rd day of March ,20 04.

L.S. 5171 (Exp. 6–30–2007)

SURVEYOR'S STATEMENT

This map correctly represents a survey made by me or under my direction in conformance with the requirements of the Land Surveyor's Act at the request of COUNTY OF SAN LUIS OBISPO, in OCTOBER 20 02.

3/23/04

L.S. 5171 (Exp. 6–30–2007)

LICENSE REQUIREMENTS

The successful bidder shall possess a Class A general engineering contractor's license at the time this contract is awarded. In the alternative, the successful bidder shall possess a specialty contractor's license at the time this contract is awarded that permits the successful bidder to perform with his or her own organization contract work amounting to not less than 50% of the original total contract price and to subcontract the remaining work in accordance with Section 8–1.01, "Subcontracting," of the Standard Specifications.

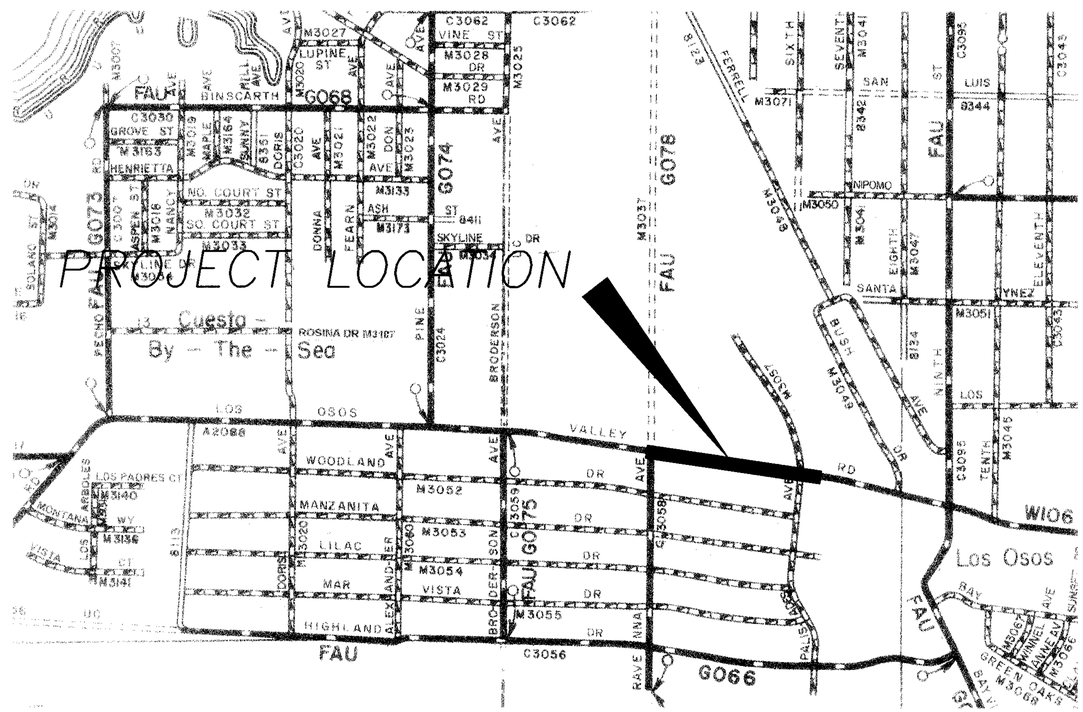

NTS

LOCATION MAP

NO SCALE

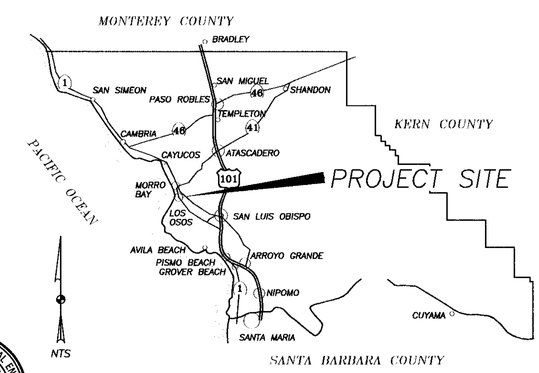

NTS

VICINITY MAP

NO SCALE

REGISTERED PROFESSIONAL ENGINEER LOUIS G. BIBSON No. 34696 7-30-05 CIVIL STATE OF CALIFORNIA

LOS OSOS VALLEY ROAD					
TITLE SHEET					
LOS OSOS, CA.					
Designer	Date	Drawn By	Date	Design Engineer	Date
		D Rion	3/04	L. G. Bibson	3/22/04

ROAD NO.	JOB NO.	SHEET NO.	TOTAL SHEETS
2088		2	4

ROADSIDE SIGN SUMMARY

SIGNS	STA.	O/S
R26+R81	481+00	2.3' LT.
R26+R81	483+00	10' LT.
R26+R81	485+00	10' LT.
R26+R81	487+00	10' LT.
R26+R81	489+00	10' LT.

CURB RETURN CURVE DATA

NO.	RADIUS	DELTA	L	T
C2	35'	81°39'	49.88'	30.24'
C5	30'	91°43'	48.02'	30.91'
C6	30'	86°45'	45.42'	28.34'

CONSTRUCTION CENTERLINE CURVE DATA

CURVE NO.	RADIUS	DELTA	L	T
C1	3000.00	07°22'47"	386.40	193.47
C2	6500.00	04°22'29"	496.31	248.27
C3	4520.00	02°16'37"	179.63	89.83
C4	4480.00	02°17'18"	178.93	89.48

CONSTRUCTION CENTERLINE DATA

LINE NO.	BEARING	DISTANCE
L1	S 86°13'15" E	31.16
L2	S 87°31'52" E	677.81
L3	S 88°13'31" E	550.62
L4	S 80°50'45" E	776.36
L5	S 80°01'23" E	776.13
L6	S 75°39'10" E	229.60
L7	S 73°21'36" E	20.45
L8	S 75°38'54" E	122.58

CONSTRUCTION NOTES

- A = CONSTRUCT PCC CURB RETURN WITH CURB RAMP
- B = CONSTRUCT PCC CROSS GUTTER & SPANDRELS
- C = REMOVE EXISTING CULVERT
- D = REMOVE EXISTING INLET
- E = INSTALL SURVEY MONUMENT WELL AT ANGLE PT., STA. 479+73.65
- F = INSTALL SURVEY MONUMENT WELL AT PI, STA. 489+97.94, 4.74' LT.
- G = RELOCATE STOP SIGN
- H = INSTALL CONSTRUCTION AREA SIGN, TYPE C18, LOCATE AS DIRECTED BY THE ENGINEER
- J = INSTALL CONSTRUCTION AREA SIGN, TYPE C13, LOCATE AS DIRECTED BY THE ENGINEER
- K = INSTALL 36" STORM DRAIN PIPE
- L = 485+79.5, CONSTRUCT INLET, SEE DETAIL SHEET
- M = CONSTRUCT AC DRIVEWAY, 2" TYPE B AC OVER 6" CL. 2 BASE

FOUND MONUMENTS (STATIONS AND OFFSETS MEASURED FROM CONSTRUCTION CENTERLINE)

NO.	STATION	OFFSET	DESCRIPTION
4	479+42.67	50.00' RT.	BRASS CAP IN MONUMENT WELL
5	479+73.65	0.00' RT.	1.5" IP
6	489+54.91	58.22' LT.	BRASS CAP IN MONUMENT WELL
7	489+58.87	46.70' RT.	1.5" IP TAGGED IN MONUMENT WELL
8	489+97.94	4.74' LT.	SPIKE & TIN
9	496+55.47	0.00' RT.	SPIKE
10	496+75.75	0.00' RT.	SPIKE
11	498+54.79	0.00' RT.	SPIKE
12	499+77.28	0.00' RT.	BRASS CAP IN MONUMENT WELL

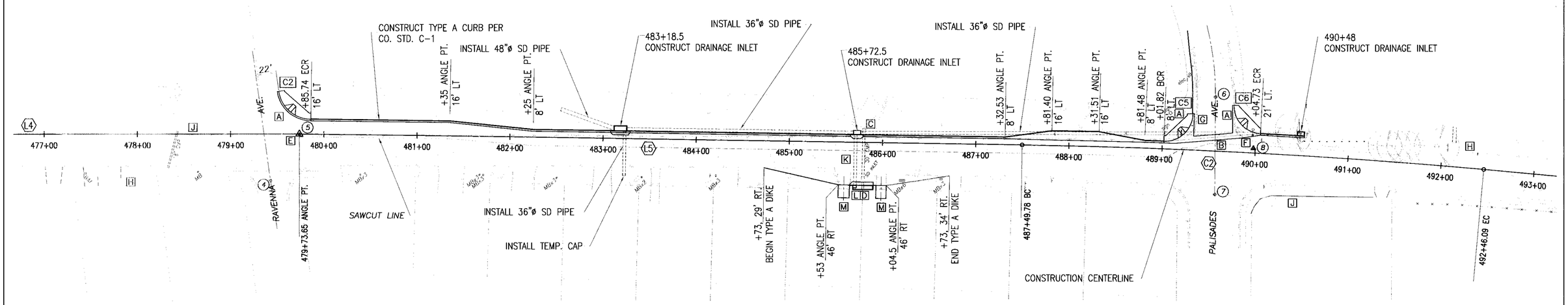

BENCHMARK: TBM "CP 6" ELEV.=108.61', NAVD 88 DATUM
PK NAIL @ NE COR. BRODERSON & LOS OSOS VALLEY RD.
STA. 470+37.20, 0.28' LEFT F.B. 2088 PG. 2.220

BENCHMARK: TBM "CP 7" ELEV.=97.32', NAVD 88 DATUM
PK NAIL @ STA. 476+09.75, 1.43' RIGHT F.B. 2088 PG. 2.221

BENCHMARK: TBM "CP 8" ELEV.=97.29', NAVD 88 DATUM
PK NAIL @ STA. 482+63.04, 0.01' LEFT, F.B. 2088 PG. 2.221

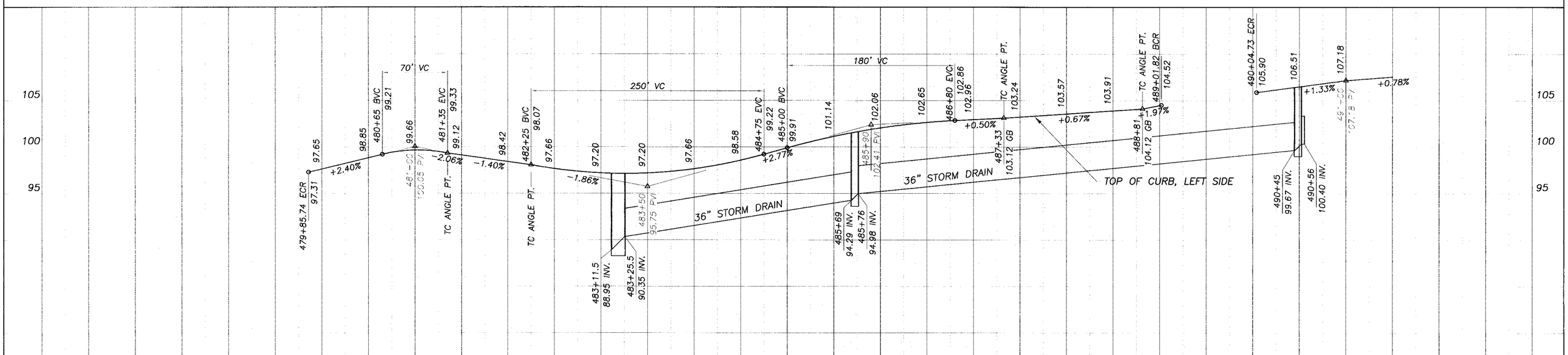

CU YDS	EXC LMR

Engineer	Date	Drawn By	Date	Design Engineer	Date
	MARCH 2004	D RION	3/04	G. GIBSON	MARCH 2004

0 1 2 3
ORIGINAL SCALE IN INCHES FOR REDUCED PLANS

LOS OSOS VALLEY ROAD
STA 477+00 TO 493+00

ROAD NO.	JOB NO.	SHEET NO.	TOTAL SHEETS
2088		3	4

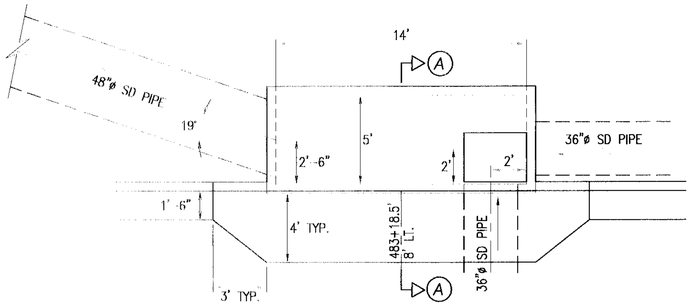

STA. 483+18.5 LT.
INLET
SCALE 1/4" = 1'-0"

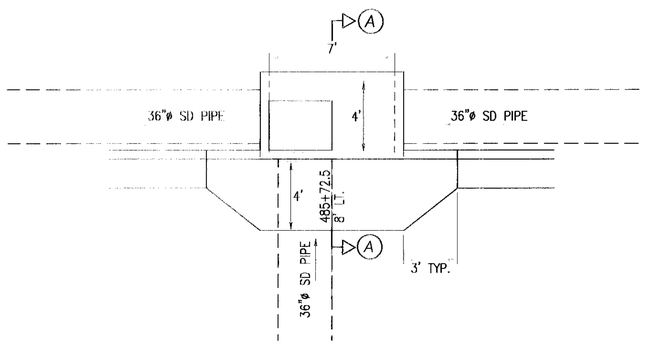

STA. 485+72.5 LT.
INLET
SCALE 1/4" = 1'-0"

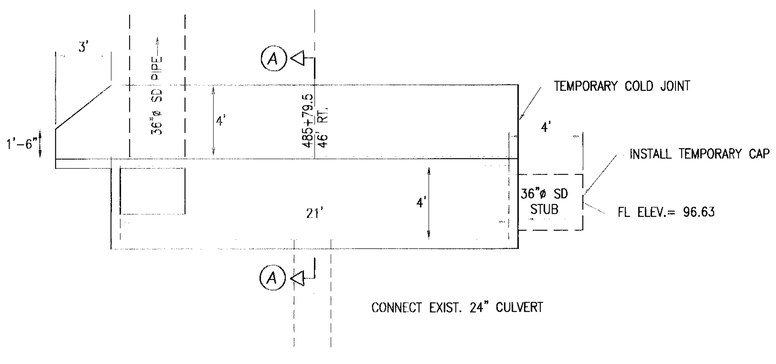

STA. 485+79.5 RT.
INLET
SCALE 1/4" = 1'-0"

STORM DRAIN INLET DATA

INLET STA.	SIDE	W	TC ELEV	"A" (INLET)	"A" (OUTLET)	"B"	"C"
483+18.5	LEFT	5'	97.14'	90.35'	88.95'	-----	90.68'
485+72.5	LEFT	4'	101.59'	94.98'	94.29'	-----	95.11'
485+79.5	RIGHT	4'	101.72'	96.55'	-----	?	95.66'
490+48	LEFT	4'	106.49'	100.40'	99.67'	-----	-----

SEE ST. STD. D72, TYPE OL INLET
D77C, FRAME & COVER
D78, LOCAL DEPRESSION

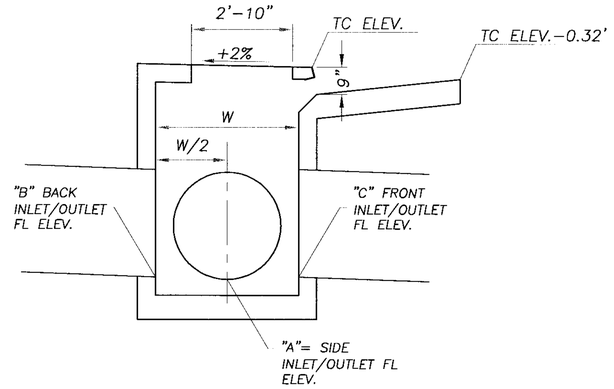

SEC A-A
NO SCALE

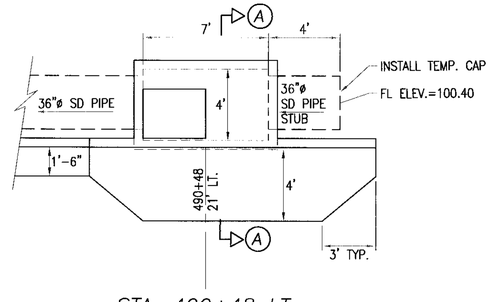

STA. 490+48 LT.
INLET
SCALE 1/4" = 1'-0"

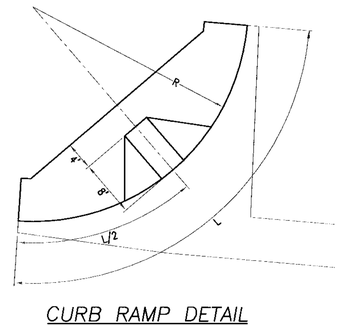

CURB RAMP DETAIL
SCALE 1"=10'

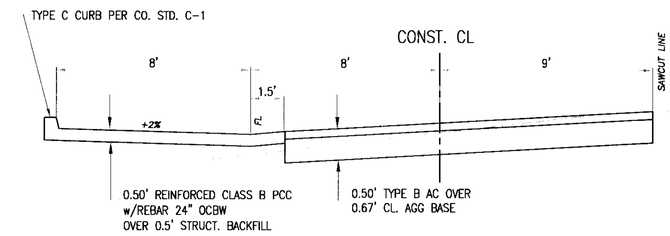

TYPICAL SECTION AT BUS
STOP STA. 488+00
NO SCALE

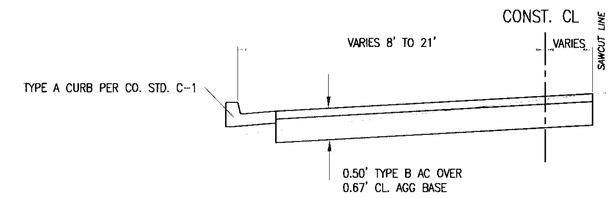

TYPICAL CROSS SECTION
NO SCALE

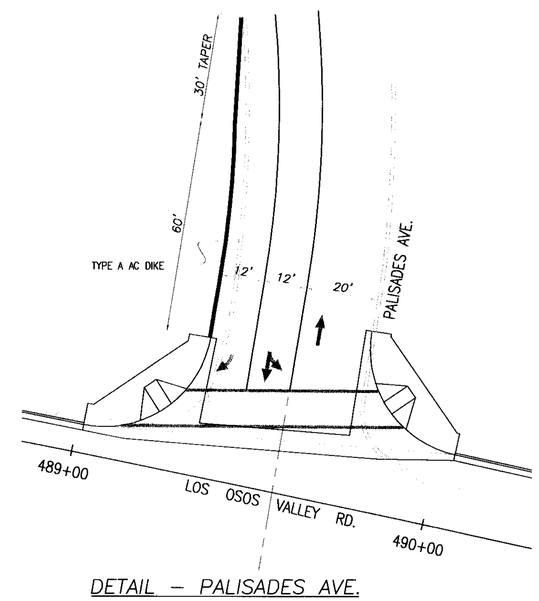

DETAIL - PALISADES AVE.
SCALE 1'=20'

LOS OSOS VALLEY ROAD					
DETAILS					
LOS OSOS, CA.					
Designer	Date	Drawn By	Date	Design Engineer	Date
	FEB. 04	D RION	12/2003	G. GIBSON	FEB. 04

ROAD NO.	JOB NO.	SHEET NO.	TOTAL SHEETS
2088		4	4

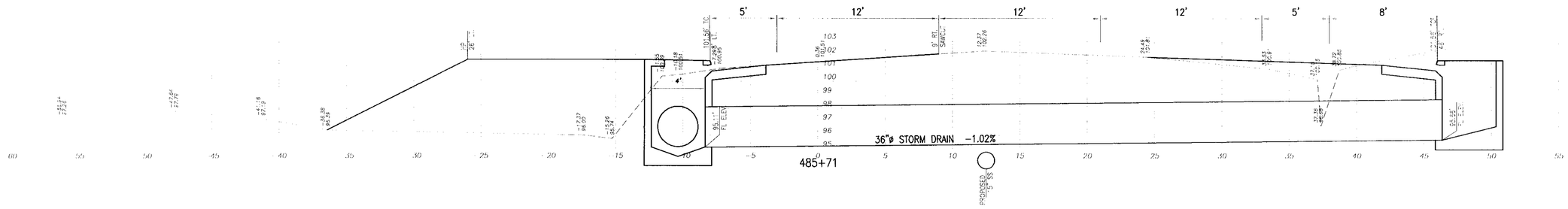

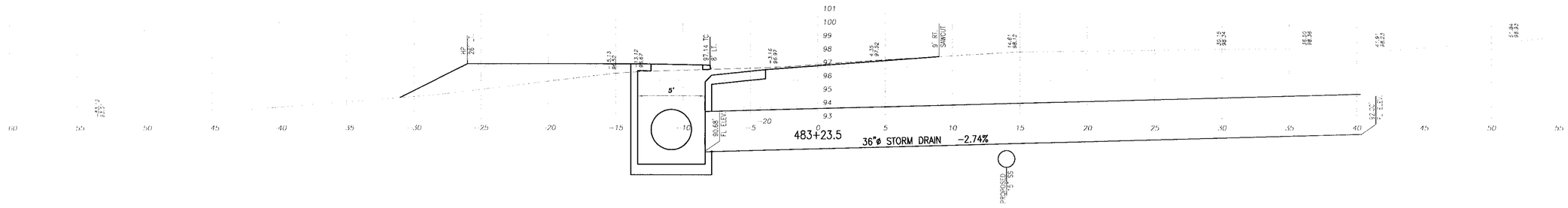

LOS OSOS VALLEY ROAD					
STORM DRAIN PROFILES					
LOS OSOS, CA.					
Designer	Date	Drawn By	Date	Design Engineer	Date
	MARCH 2004	D RION	3/04	G. GIBSON	MARCH 04