LOS OSOS COMMUNITY SERVICES DISTRICT

CONSTRUCTION OF
LOS OSOS WASTEWATER PROJECT
AREA A, AREA B, AREA C, & AREA D AND WWTF

STATE REVOLVING FUND LOAN PROGRAM
PROJECT NO. C – 06 – 4014 - 110

ADDENDUM NO. 5
January 21, 2005

REGISTERED PROFESSIONAL ENGINEER
STEVEN J. HYLAND
NO. C23892
Exp. 12-31-2005
CIVIL
STATE OF CALIFORNIA

MWH
MONTGOMERY WATSON HARZA

Addendum No. 5
to the
Los Osos Wastewater Project

January 21, 2005

Los Osos Community Services District

2122 9th Street, Los Osos, CA 93402

To all prospective Bidders:

Attached herein are addendum items that shall be incorporated into the Contract Documents for the Los Osos Wastewater Project. These changes shall be considered as part of the Contract Documents, as if they were originally provided therein, and as such shall be used as Contract Documents. All other terms, conditions, requirements, and specifications of the Contract Documents shall remain unchanged.

Bidders must acknowledge receipt of this addendum on the Bid Forms. Failure to acknowledge receipt of this addendum may be considered non-responsive by the OWNER and may be cause for rejection of your Bid.

All communications relative to this addendum shall be directed to the ENGINEER prior to opening of the Bids.

For Area construction contact:

MWH Americas, Inc.
1340 Treat Blvd., Suite 300
Walnut Creek, CA 94596
Telephone: (925) 274 - 2245
Attention: John Bergen

For WWTF construction contact:

MWH Americas, Inc.
1340 Treat Blvd., Suite 300
Walnut Creek, CA 94596
Telephone: (925) 274 - 2201
Attention: Steve Hyland

Background

The Los Osos Wastewater Project was previously advertised for bids on March 1, 2004 and was scheduled to receive and open bids on April 28, 2004. The Project bidding was postponed on April 16, 2004 (Addendum No. 4) due to an appeal hearing conducted by the California Coastal Commission on April 15, 2004. At a subsequent hearing on August 11, 2004 the California Coastal Commission approved issuance of the Coastal Development Permit for the Project subject to Conditions of Approval. The Contract Documents have been revised to address these Conditions of Approval and the Coastal Development Permit has been issued.

Prospective bidders are advised that the previously issued Specifications and Drawings (Volumes I, IIA, IIB, IIIA, IIIB, IV, V, VIA, and VIB, previously issued Addenda Nos. 1 – 4, and this Addendum No. 5 constitute the Contract Documents for the Project. Contract Documents are available for purchase from ASAP Reprographics, 495 Morro Bay Boulevard, Morro Bay, CA 93442, Attn.: Vicki, Phone (805) 772 – 6921. Contract Documents and document holder list may be reviewed on-line at www.asapplanroom.com. User name is *LOCSD* and password is *wastewater*.

Prospective bidders are also advised that the prequalification of General Contractors and selected Subcontractors was previously conducted and that no changes to the prior prequalification have been made. Only those companies that have been previously prequalified may submit bids for this Project.

Addendum No. 5

The Contract Documents for the Los Osos Wastewater Project shall be modified by this addendum in accordance with the following items:

No.	Ref.	Description
	Vol. I	
5.01	Title Pages	**Delete** the references to "April 28, 2004" for Receipt of Bids and **replace** with the following: "February 24, 2005".
5.02	00030CA	**Delete** the references to "April 28, 2004" in the Paragraph RECEIPT OF BIDS and Paragraph OPENING OF BIDS and **replace** with the following: "February 24, 2005".
5.03	00030CA	**Add** the following to Paragraph PRE-BID CONFERENCE AND VISIT TO THE SITE: "Prequalified general contractors and selected subcontractors are invited to attend a pre-bid conference that will begin at 1:30 PM on February 2, 2005 at the Regional Water Quality Control Board, Central Coast Region, 895 Aerovista Place, Suite 101, San Luis Obispo, CA. Attendance at the prebid meeting is not mandatory, but strongly encouraged, for the prequalified general contractors and selected subcontractors that intend to bid the Project.

		The purpose of the conference will be to discuss the changes in the Project that have occurred since April 2004. Detailed questions may be submitted in writing, but they will be answered, if warranted, by addendum later. Oral statements may not be relied upon and will not be binding or legally effective."
5.04	00300CA	**Delete** Section 00300CA – Bid Forms in its entirety and **replace** with the new Section 00300CA – Bid Forms attached to this addendum.
5.05	01025	**Delete** BID ITEM 11: 12" Gravity Sewer By Microtunneling. **Delete** BID ITEM 43A: 12" Disposal Main – 9th Street. **Delete** the third sentence of BID ITEM 56: Additional Pavement Restoration and **replace** with the following: "(Minimum section shall be 3-inches asphalt concrete on 4-inches aggregate base.)" **Add** the following to Paragraph 1.2: "57A. BID ITEM 57A: Disinfect Construction Dewatering Water. Payment shall be per EACH DAY. Work shall be as ordered by the ENGINEER, including all work to disinfect construction dewatering water. Work to withdraw, convey, remove sediments from, dispose of, monitor, and report on dewatering water shall be included with other Bid Items."
5.06	01313	**Delete** the word "SOR" in Paragraph 1.6.C and **replace** with the words "Outage Request".
5.07	01571	**Add** the following to Paragraph 1.3.A.1: "c. Pecho Valley Road."
5.08	01590	**Add** the following to Paragraph 1.1 GENERAL: "C. The field offices, equipment, and services specified herein may be provided at an alternative location in existing buildings subject to the following requirements: 1. Review and acceptance of alternative location and buildings by the ENGINEER. 2. Provision of equivalent equipment, furnishings, services, and utilities as specified herein for the WWTF Site. 3. Location of CONTRACTOR's field offices at the same alternative location as the ENGINEER's field offices. D. A potential alternative location is the existing Sunnyside Elementary School located south of Los Osos Valley Road between Bayview Heights Drive and Palisades Avenue. (Contact: Mr. Jeff Edwards, J.H. Edwards Co., P.O. Box 6070, Los Osos, CA 93412, Phone (805) 528 - 1567, Fax (805) 528 – 4473.)
	Vol. IIA	
	02140	**Delete** "… Section 01562 …" in the second sentence of Paragraph 1.1 E

		and **replace** with the following: "… Section 01570 …"
	02140	**Delete** Paragraph 3.1 I, Paragraph 3.1 J, and Paragraph 3.1 K and **replace** with the following: "I. (Not Used) J. (Not Used) K. (Not Used)"
	02140	**Add** the following to Part 3 - EXECUTION: "3.2 DISPOSAL OF DEWATERING WATER A. The CONTRACTOR shall dispose of dewatering water removed from the WORK in a suitable manner without damage to adjacent property. The CONTRACTOR shall be responsible to obtain any permits that may be necessary to dispose of the water. The CONTRACTOR shall be responsible to furnish all temporary equipment, piping, valves, and appurtenances to accomplish the acceptable disposal of dewatering water. B. The CONTRACTOR shall include a description of the dewatering water disposal approach with locations and methods of dewatering water collection, conveyance, and discharge in the dewatering plan submittal specified in Paragraph 1.2.A herein. The description shall also include a summary of the monitoring and reporting approach. C. The CONTRACTOR may utilize the collection system sewer mains for the conveyance of dewatering water from excavations to pump station wet wells and selected manholes, subject to the following requirements: 1. The dewatering water shall be pretreated, if necessary, to remove any sediments and silts prior to discharge to the sewer mains. The water shall be settled or filtered to remove sand and fine-sized soil particles. The dewatering water discharge to the sewer mains shall not exceed 3 ml/l of settleable solids. 2. Dewatering pumps shall be furnished by the CONTRACTOR. The use of wastewater pumps to be installed as part of the WORK shall not be used for conveyance of dewatering water. 3. The dewatering pumps shall be electric motor driven and served by the local electrical utility for normal operation. The CONTRACTOR may provide for portable engine-generator sets to provide standby electrical power in the event of a power outage. The engine-generator sets shall not operate when service from the electrical utility is available to minimize noise propagation to residential neighborhoods. 4. Upon completion of dewatering operations that utilize the

		collection system sewer mains, manholes, and pump station wet wells, the system shall be cleaned and television inspected in accordance with Section 01658 – Pipeline Cleaning and Television Inspection. D. The CONTRACTOR is directed to plan and develop the methods of disposal for dewatering water in the following order of priority: 1. Dewatering water, when available, shall be used for auxiliary construction activities such as earthwork compaction and dust control to conserve the use of potable water and to minimize the disposal volume of dewatering water. 2. Dewatering water that originates within 1000 feet of publically owned stormwater retention basins shall be routed to the retention basin. Existing publically owned stormwater retention basins are located south of the East Ysabel Pump Station near the intersection of South Bay Boulevard and Santa Ysabel Avenue (Ysabel Terminal Basin with 50 gpm capacity) and southeast of the intersection of Santa Ynez Avenue and Fairchild Way (Fairchild Terminal Basin with 400 gpm capacity). 3. The CONTRACTOR is encouraged to seek the use of privately owned retention basins and/or open lots to develop percolation or irrigation fields for disposal where feasible. If used, the CONTRACTOR shall furnish written confirmation from the property owner of the retention basin or field that such use is acceptable. 4. Use outfalls from stormwater drainage pump stations or stormwater channel. Possible combinations of new pump station wet well locations and existing stormwater drainage pump station outfalls or stormwater channel are listed as follows: a. Dewatering water that is conveyed to the Lupine Pump Station wet well may be discharged to the outfall of the stormwater drainage pump station located at the intersection of Don Avenue and Mitchell Drive. The hydraulic capacity of this outfall is 500 gpm. b. Dewatering water that is conveyed to the Baywood Pump Station or the East Paso Pump Station may be discharged to the outfall of the stormwater drainage pump station located at the intersection of 8th Street and El Moro Avenue. The hydraulic capacity of this outfall is 4000 gpm. c. Dewatering water that is conveyed to the East Paso Pump Station may be discharged to the Walker Ditch, a reinforced concrete channel located at the intersection of 18th Street and Paso Robles Avenue. The hydraulic capacity of this channel is 800 gpm.

E. The use of existing stormwater retention basins, existing outfalls from stormwater drainage pump stations, and/or stormwater channel is subject to the following conditions:

1. The discharge of dewatering water shall not be allowed during storm events and any subsequent runoff periods when stormwater flow is entering the stormwater drainage facilities.

2. The dewatering water shall be pretreated, if necessary, to remove any sediments and silts prior to discharge. The water shall be settled or filtered to remove sand and fine-sized soil particles. The dewatering water discharge shall not exceed 3 ml/l of settleable solids.

3. The dewatering water shall not exceed 14 MPN/100 ml of fecal coliform bacteria with no more of than 10 percent of the samples exceeding 43 MPN/100 ml prior to discharge to the stormwater facility. If fecal coliform bacteria are measured in excess of this limit, the CONTRACTOR shall disinfect (and dechlorinate if necessary) as specified herein and shall be reimbursed on a unit price basis under Bid Item 57A as described in Section 01025 – Measurement and Payment.

F. If disinfection is required per Paragraph 3.2.E.3 above, the CONTRACTOR shall provide suitable disinfection to meet the fecal coliform limitation. The disinfection facilities shall include liquid hypochlorite storage and feed equipment, disinfection tank with minimum 30-minute detention time at the dewatering flow rate, liquid sodium bisulfite dechlorination storage and feed equipment, and ancillary controls and instrumentation for automated operation, monitoring, and alarms. Liquid chemical facilities shall include suitable spill containment and safety devices. Alternative disinfection methods such as UV disinfection may be used, subject to the review and acceptance of the ENGINEER, except that the use of gaseous chlorine and/or sulfur dioxide shall not be allowed.

G. The CONTRACTOR shall be required to monitor and report the status of each dewatering location and discharge location. Representative grab samples of dewatering water at each discharge location shall be obtained and analyzed for the parameters and at the frequency shown below.

Parameter	Sample Frequency
Fecal Coliform	Weekly
Settleable Solids	Weekly
Ammonia	Monthly
pH	Monthly

The monthly report shall also include the locations and duration (date and time) of construction dewatering sources and the

		estimated volumes of construction dewatering water discharges. A description of any corrective actions shall be included with the report if noncompliance with any water quality objective occurs."
	02460	**Delete** Paragraph 1.1.A, 1.1.B and Paragraph 1.1.C and **replace** with the following: "A. The CONTRACTOR shall provide asphalt concrete (A.C. or AC) pavement and base, complete and in place, in accordance with Contract Documents. New AC pavement and base shall be provided as shown on the Drawings. Replacement AC pavement and base shall be provided by patching or full-width restoration as specified herein. Full-width restoration work shall include pulverization of existing AC, base, and subgrade materials and compacting and treating the material prior to paving. B. Where existing pavement is removed by construction activities, the pavement shall be restored with patching or full-width restoration as specified herein and shown in the Drawings. C. The OWNER has conducted a pavement condition assessment and has identified the segments of existing street pavement designated for patching and the segments in poor condition for full-width restoration in lieu of patching. The full-width restoration segments are also designated as "Dry" or "Wet" categories. These pavement condition designations are shown on the Drawings. D. The thickness of paving and base sections for patching of arterial streets, collector streets, and minor streets are shown on the Drawings. E. Where portions of existing pavement designated for patching are not initially removed, but are damaged by construction activities, the damaged pavement shall be removed and replaced with patching. F. The CONTRACTOR shall minimize the removal and damage to pavement during construction activities. If over 50 percent of the pavement area for any given street segment (block by block) designated for patching is removed, a pavement overlay shall be provided by the CONTRACTOR with no change in Contract Price or Contract Times. The portions of pavement removed shall first be patched as specified herein. Then the full width of the pavement shall also be provided with a 1.5-inch AC pavement overlay from outside edge of pavement to outside edge of pavement for the length of the block segment. Prior to installation of the AC pavement overlay the existing pavement shall be thoroughly cleaned and a tack coat shall be applied. Where the existing streets include curb and gutter, the existing pavement shall be ground to form a smooth transition from the overlay to the edge of the gutter. The edge of pavement shall be placed within 0.25 inch of the grade of existing gutter and provide for the 1.5 inch overlay thickness. G. Full-width restoration shall consist of placing the following thickness of

		AC on a pulverized and compacted subgrade (PCSG) in areas designated “Dry” and on a pulverized, treated, and compacted subgrade (PTSG) in areas designated “Wet”. The minimum thickness of paving and base sections for full-width restoration of collector streets and minor streets is summarized as follows: Collector Streets (Dry): 3-inches AC, 12-inches PCSG Collector Streets (Wet): 3-inches AC, 12-inches PTSG Minor Streets (Dry): 2.5-inches AC, 12-inches PCSG Minor Streets (Wet): 2.5 inches AC, 12-inches PTSG The “Dry” designation refers to streets where the estimated groundwater level is approximately greater than 10 feet below grade and the "Wet" designation refers to streets where the estimated groundwater level is approximately less than 10 feet below grade. H. The full-width restoration for designated street segments (block by block) shall be from original outside edge of pavement to original outside edge of pavement. The PCSG or PTSG base shall be graded so that the minimum thickness of AC is achieved across the full width of the street and the top of the AC matches the elevation of adjoining streets, driveways, drainage facilities, and other existing surface features. The elevation of manhole frames and covers, valve boxes, and other appurtenances shall be adjusted to final grade as required.” **Add** the following paragraphs to Part 3 – Execution: “3.9 PCSG A. PCSG shall consist of pulverization of the upper 12 inches of the existing AC, base, and native subgrade material and compacting the resulting material to a minimum of 95 percent relative compaction as determined by ASTM D1557. B. Pulverization and mixing of the material shall be performed utilizing machines or a combination of machines that will produce results meeting all requirements for PCSG specified herein. C. Pulverization of the material shall be conducted using equipment capable of mixing the materials uniformly to the depth specified. Mixing or remixing operations, regardless of the equipment used, shall continue until the material is uniformly mixed and reduced to a maximum size less than 2 inches and not less than 55 percent material passing the U.S. Standard No. 4 sieve. Oversized rock or aggregate that cannot be pulverized or reduced shall be removed from the subgrade. Prior to compaction, the material shall be conditioned to uniform moisture content near the optimum. D. The surface of the PCSG material shall be rolled and graded smooth and true to the elevations and contours to match the existing

		pavement and to provide a firm and unyielding condition. Soft or yielding material shall be removed and replaced with properly compacted material prior to paving. Excess material from finish grading shall be disposed of offsite. 3.10 PTSG A. PTSG shall consist of pulverization of the upper 12 inches of the existing AC, base, and native subgrade material in the same manner as for PCSG. The pulverized soil shall be treated with additives to control excess moisture for compaction and subgrade stabilization to improve the subgrade support for pavements in wet areas. The CONTRACTOR shall submit the application method, application rate, equipment to be used, and the spreading and compaction methods for PTSG for approval of the ENGINEER prior to beginning work. B. PTSG shall contain 3 percent by mass dry weight of Type II Modified Portland cement. Additional cement may be provided at the discretion of the CONTRACTOR with the prior approval of the ENGINEER and at no change to Contract Price or Contract Times. Cement can be added prior to, during, or following pulverization. Compaction shall commence within 30 minutes after cement is mixed with the PTSG and proceed continuously until the completed. Final compaction of the mixture to the specified density shall be compacted within 2.5 hours after commencing mixing of the cement with the material. C. During finishing operations, the surface of the PTSG shall be shaped to the required lines, grades, and cross section and shall be kept moist. PTSG shall be allowed to cure a minimum of 3 days prior to paving. Vehicular traffic will be allowed on the PTSG during the curing period. The CONTRACTOR shall provide saw cutting for control joints as needed to limit cracking due to shrinkage of the PTSG. 3.11 Test Section A. The CONTRACTOR shall submit Shop Drawings of the proposed machines and methods for the PCSG and PTSG to the ENGINEER for review and schedule installation of a test section within 45 days of Notice to Proceed. The test section shall be full-width restoration as specified herein with the proposed machines and methods to install a one block street segment and shall be approximately 50 percent PCSG and 50 percent PTSG. Full-width restoration shall not proceed for the WORK until a satisfactory test section has been installed and accepted by the ENGINEER that meets the requirements specified herein, Section 01313 – Construction and Schedule Constraints including, but not limited to, noise and dust control constraints, and Section 01571 – Traffic Control.”
	02490	**Add** the following to Paragraph 2.1: “K. The interior of manholes provided for Sewer Drop Manholes, Combination Air/Vacuum Release Valve Manholes, Force Main to

		Gravity Sewer Transition Manholes, and Pocket Pump Station Force Main to Gravity Sewer Transition Manholes shall be PVC-lined. The PVC lining shall be provided in accordance with the requirements specified in Section 02557 - Reinforced Concrete Pipe (PVC-Lined)."
	10522	**Add** the following paragraph to Part 2 – Products: "2.3 REQUIREMENTS 1. Install fire extinguishers in accordance with the following schedules: **Standby Power Buildings** Location / No. / Type Solano / 1 / Bracket-mounted (a) Lupine / 1 / Bracket-mounted (a) West Paso / Baywood / 1 / Bracket-mounted (a) East Ysabel / 1 / Bracket-mounted (a) East Paso / 1 / Bracket-mounted (a) Mountain View / 1 / Bracket-mounted (a) Sunny Oaks / 1 / Bracket-mounted (a) **Harvest Well Buildings** Location / No. / Type Loma / 1 / Bracket-mounted (a) Palisades / 1 / Bracket-mounted (a) East Paso / 1 / Bracket-mounted (a) (a) Locate as directed by the ENGINEER.
	Vol. IIB	
	17100	**Add** field instruments for the Solano Pump Station, equivalent to the field instruments for the Sunny Oaks Pump Station, except that the Tag No. prefix shall be SL in lieu of SO, to Appendix A - Field Instrument List.
	17100	**Add** the following to Appendix A, Field Instrument List on page 17100-22: "Instr Tag / PLC / Spec / Enclosure WP-AE/AIT-1 / R I/O#2 / 17113 / NEMA 7/4X Range/Setpoint / Service / Dwg No. 0-100%LEL / WP Wetwell LEL Gas Sensor / A-I-201"
	17100	**Add** the following to Appendix A, Field Instrument List on page 17100-24: "Instr Tag / PLC / Spec / Enclosure LU-AE/AIT-1 / R I/O#2 / 17113 / NEMA 7/4X Range/Setpoint / Service / Dwg No.

		0-100%LEL LU Wetwell LEL Gas Sensor B-I-201”
	17300	**Add** the following row to the table for submersible pump station in Paragraph 1.3.A: “ PS Location No. Speed Pump Nos. RTU/LCP No. Solano Solano & Butte 2 Constant SL-P1,2 26”
	17510	**Delete** the first sentence of Paragraph 1.1.D.1.e and **replace** with the following: “The Area A & D Instrument Supplier shall provide a new PLC, radio, UPS, and associated power supplies, with associated level transmitter (specified in Section 17106), in an LCP enclosure inside the Standby Power Buildings for the East Ysabel Pump Station, the East Paso Pump Station, and the Mountain View Pump Station.”
	17510	**Delete** the first sentence of Paragraph 1.1.D.1.g and **replace** with the following: “The Area A & D Instrument Supplier shall provide a new PLC, radio, UPS, and associated power supplies, with associated level transmitter (specified in Section 17106), in an LCP enclosure installed by the Area B & C CONTRACTOR inside the Standby Power Buildings for the Solano Pump Station, Lupine Pump Station, and the Sunny Oaks Pump Station.”
	17510	**Add** I/O elements for the Solano Pump Station, equivalent to the I/O entries for the Sunny Oaks Pump Station, except that the Tag No. prefix shall be SL in lieu of SO, to Appendix A, I/O Summary Schedule.
	17510	**Add** the following to Appendix A, I/O Summary Schedule on page 17510-20: “I/O Tag I/O Type RTU/LCP WP-AI-1 AI 13 Equip Tag Description Dwg No. WP PS LEL Gas Indication A-I-201”
	17510	**Add** the following to Appendix A, I/O Summary Schedule on page 17510-25: “I/O Tag I/O Type RTU/LCP LU-AI-1 AI 13 Equip Tag Description Dwg No. LU PS LEL Gas Indication B-I-201”
	Vol. IIIA	
	02140	**Delete** “… Section 01562 …” in the second sentence of Paragraph 1.1 E and **replace** with the following: “… Section 01570 …”

	02140	If construction dewatering water is produced at the WWTF site, disposal of dewatering water shall be conducted as specified for the Area work in Section 02140 – Dewatering of Volume IIA: Technical Specifications for Area A, Area B, Area C, & Area D Contract Documents except that the use of collection system sewer mains will not be available for use.
	04232	**Use** Section 04232 – Reinforced Concrete Block Masonry from Volume IIA: Technical Specifications for Area A, Area B, Area C, & Area D Contract Documents for construction of the Public Restroom.
	05500	**Use** Section 05500 – Miscellaneous Metalwork from Volume IIA: Technical Specifications for Area A, Area B, Area C, & Area D Contract Documents for construction of the Public Restroom.
	06100	**Use** Section 06100 – Rough Carpentry from Volume IIA: Technical Specifications for Area A, Area B, Area C, & Area D Contract Documents for construction of the Public Restroom.
	06172	**Use** Section 06172 – Wood Trusses from Volume IIA: Technical Specifications for Area A, Area B, Area C, & Area D Contract Documents for construction of the Public Restroom.
	07160	**Use** Section 07160 – Bituminous Dampproofing from Volume IIA: Technical Specifications for Area A, Area B, Area C, & Area D Contract Documents for construction of the Public Restroom.
	07320	**Use** Section 07320 – Roof Tiles from Volume IIA: Technical Specifications for Area A, Area B, Area C, & Area D Contract Documents for construction of the Public Restroom.
	07600	**Use** Section 07600 – Pre-Finished Fascia, Flashing, and Sheet Metal from Volume IIA: Technical Specifications for Area A, Area B, Area C, & Area D Contract Documents for construction of the Public Restroom.
	07901	**Use** Section 07901 – Joint Sealants from Volume IIA: Technical Specifications for Area A, Area B, Area C, & Area D Contract Documents for construction of the Public Restroom.
	07920	**Use** Section 07920 – Sealants and Caulking from Volume IIA: Technical Specifications for Area A, Area B, Area C, & Area D Contract Documents for construction of the Public Restroom.
	08305	**Add** Section 08305 – Access Doors attached to this Addendum for construction of the Public Restroom.
	08620	**Add** Section 08620 – Tubular Skylights attached to this Addendum for construction of the Public Restroom.
	08710	**Add** the following group hardware to Paragraph 3.3 for construction of the Public Restroom: **"GROUP RR** 1.5 PAIR BUTTS BB5000 4.5 X 4.5 26D BOMMER 1 EACH DEAD BOLT B864P 26 SCHLAGE

		1 EACH CLOSER P4041 EDA LCN 1 EA PUSH PLATE 8200 4" X 16" 630 IVE 1 EA PULL PLATE 8302-8 4" X 16" 630 IVE 1 EACH KICK PLATE 10" x 2" LDW 32D QUALITY 1 EACH STOP 463 26D QUALITY 1 EACH WEATHERSTRIP 160 NG”
	09255	**Use** Section 09255 – Gypsum Board from Volume IIA: Technical Specifications for Area A, Area B, Area C, & Area D Contract Documents for construction of the Public Restroom.
	09901	**Add** the following to Paragraph 3.13.A for construction of the Public Restroom: “10. Exterior Concrete Block Masonry a. Primer: Acrylic masonry sealer (066) b. Finish: Moorlastic Acrylic Elastomeric Waterproof Coating”
	09901	**Add** the following to Paragraph 3.13.B for construction of the Public Restroom: “8. Interior Concrete Masonry and Gypsum Board: (Epoxy Coating a. First Coat: Macropoxy Primer (B58) b. Second Coat: Macropoxy 646 (B58-600) c. Third Coat: Macropoxy 646 (B58-600) 9. Interior Concrete Floor (Clear Epoxy Sealer): a. First Coat: ArmorSeal Rexthane I Floor Coating (B65-60) w/o grit b. Second Coat: ArmorSeal Rexthane I Floor Coating (B65-60) w/ grit 10. Colors: As selected by ENGINEER; exterior shall have field color and two (2) trim colors, interior walls and structure shall be a single color.”
	10170	**Add** Section 10170 – Composite Toilet Partitions attached to this Addendum for construction of the Public Restroom.
	10200	**Add** the following to Part 2 – Products: “2.7 PUBLIC RESTROOM A. C/S Louvers, Model DL-138 1. Vents : Extruded high performance louvers, Extruded Aluminum Drainable Blade Louver. 2. Material: Frames, blades and trim members 6063-T5 alloy 0.125" (1.27mm) thick. B. Louvers shall be factory primed and finished after assembly with Kynar 500 coating , color as selected by the ENGINEER.

		C. Mounting and trim accessories as recommended by the manufacturer for this application to provide a weather-tight seal.”
	10400	**Add** the following to Paragraph 2.5: “C. The CONTRACTOR shall furnish and install 6-inch high cast metal letters to name the WWTF buildings at exterior wall locations directed by the ENGINEER: “Operations Building”, “Residuals Building”, and “Treatment Building”. D. The CONTRACTOR shall furnish 6-inch high dimensional metal letters to be installed by others for the Area buildings: 7 – “Standby Power Facility” and 4 – “Harvest Well” plus four numbers to be designated by the ENGINEER per Area building for street address.”
	10522	**Add** the following to Part 2 – Products: “2.3 REQUIREMENTS 2. Install fire extinguishers in accordance with the following schedules: **Residual Building** Location / No. / Type First floor / 7 / Bracket-mounted (a) Second floor / 4 / Bracket-mounted (a) **Treatment Building** Location / No. / Type First floor / 5 / Bracket-mounted (a) Second floor / 7 / Bracket-mounted (a) **Operations Building** Location / No. / Type Main floor / 4 / Cabinets & bracket-mounted (b) (a) Locate as directed by ENGINEER (b) Locate as shown on Drawing 44-A-01
	Vol. IIIB	
	15151	**Add** Section 15151 – Wet Pipe Sprinkler System attached to this Addendum.
	15152	**Add** Section 15152 – FM-200 Fire Suppression System attached to this Addendum.
	17100	**Add** the following to Appendix A-2, Field Instrument List on page A-2: “Instr Tag / PLC / Spec / Enclosure 41-AE-101 / R I/O#2 / 17113 / NEMA 7 41-AIT-101 / R I/O#2 / 17113 / NEMA 4X

		Range/Setpoint Service Dwg No. 0-100%LEL IPS Wetwell LEL Gas Sensor 41-I-02 0-100%LEL IPS Wetwell LEL Gas Transmitter 41-I-02”
	17100	**Add** the following to Appendix A-2, Field Instrument List on page A-5: “Instr Tag PLC Spec Enclosure 42-AE-501 R I/O#2 17113 NEMA 7 42-AIT-501 R I/O#2 17113 NEMA 4X Range/Setpoint Service Dwg No. 0-100%LEL Septage Tank LEL Gas Sensor 41-I-07 0-100%LEL Septage Tank Gas Transmitter 41-I-07”
	17113	**Delete** Paragraph 2.1.B.2 and **replace** with the following: "2. The following sensors shall be provided: a. A remote mounted explosion proof sensor with splashguard in the side of the Residuals Building Influent Box at the highest point above the waterline as possible with an NPT fitting suitable for the sensor. b. A remote mounted sensor in an explosion proof housing with splashguard on the wall of the Influent Pump Station Wetwell at the highest point above the waterline as possible. c. A remote mounted sensor with ductwork mounting kit in the HVAC ductwork of the Septage Holding Tank on the first floor of the Residual Building prior to exhaust fan 42-F-13-FA. d. A remote mounted sensor in an explosion proof housing with splashguard on the wall of the Lupine Pump Station Wetwell at the highest point above the waterline as possible. e. A remote mounted sensor in an explosion proof housing with splashguard on the wall of the West Paso Pump Station Wetwell at the highest point above the waterline as possible.”
	17113	**Add** the following to Paragraph 2.1.C.2: “4. The following transmitters will be provided: a. Influent LEL transmitter located on the second floor of the Residuals Building near the Influent Box. b. Influent Pump Station Wetwell LEL transmitter located next to the wetwell level transmitter on the wall of the lower level of the Residuals Building. c. Septage Holding Tank LEL transmitter on the first floor of the Residual Building prior to exhaust fan 42-F-13-FA. d. Lupine Pump Station Wetwell LEL transmitter located next to the level transmitter for the wetwell in the standby power building.

		e. West Paso Pump Station Wetwell LEL transmitter located next to the level transmitter for the wetwell on the instrument section of DP-1.
	17510	**Add** the following to Appendix A, I/O Summary on page A-20: "<u>I/O Tag</u> <u>Description</u> <u>Equipment</u> 41-AI-101 LEL GAS INDICATION IPS WETWELL 42-AI-501 LEL GAS INDICATION SEPTAGE TANK <u>I/O Type</u> <u>PLC</u> <u>Dwg No.</u> AI R I/O #2 41-I-02 AI R I/O #2 42-I-07"
	17510	**Add** the following to Appendix A – I/O Summary: "<u>I/O Tag</u> <u>Description</u> <u>Equipment</u> 41-YA-301 INTRUSION ALARM RESTROOM DOOR 41-YA-302 INTRUSION ALARM RESTROOM DOOR 41-YA-302 INTRUSION ALARM RESTROOM DOOR <u>I/O Type</u> <u>PLC</u> <u>Dwg No.</u> DI R I/O #3 41-E-02 DI R I/O #3 41-E-02 DI R I/O #3 41-E-02"
	<u>Vol. IV</u>	
	BC-GC-060	**Add** the following note to Standard Detail C-102, Sewer Drop Manhole: "5. MANHOLE INTERIOR SHALL BE PVC-LINED. COAT MANHOLE SHELF AREA WITH EPOXY: POLYBIRD, EUCOPOXY, OR EQUAL."
	BC-GC-061	**Delete** the asphalt concrete and aggregate base thickness information on Standard Detail C-120 and **replace** with the following: "Arterial Roads: 4.5-inches AC, 6-inches AB Collector Roads: 4-inches AC, 4.5-inches AB Minor Roads: 3-inches AC, 4-inches AB" **Add** the following streets to the Collector Roads column: "Los Olivos Avenue Bayview Heights Drive"
	BC-GC-069	**Add** Drawing BC-GC-069: Pavement Replacement Map.
	B-PP-105	**Delete** connection of 10" SS at the west side of Manhole MH-LU-A10.

	B-PP-106	**Delete** existing Drawing B-PP-106: Plan and Profile, Pecho Road, Sta 6+73.52 to Sta 14+74.47 and **replace** with new Drawing B-PP-106: Plan and Profile, Pecho Road, Sta 6+73.52 to Sta 14+74.47 attached to this Addendum.
	B-PP-123	**Add** 5 linear feet of 8-inch GS stubout at 1.0 % slope from MH-LU-D10 in easterly direction with watertight, removable cap for future connection.
	B-PP-124	**Add** 5 linear feet of 8-inch GS stubout at 1.0 % slope from MH-LU-D10 in easterly direction with watertight, removable cap for future connection.
	B-PP-154	**Delete** Drawing B-PP-154: Plan and Profile, Solano Street Tie-in, Sta 1+00.00 to Sta 5+27.64.
	B-PP-155	**Delete** existing Drawing B-PP-155: Plan and Profile, Solano Street, Sta 1+06.94 to Sta 7+82.65 and **replace** with new Drawing B-PP-155: Plan and Profile, Solano Street, Sta 1+06.94 to Sta 7+83.78 attached to this Addendum.
	B-PP-159	**Delete** existing Drawing B-PP-159: Plan and Profile, Butte Drive, Sta 1+42.46 to Sta 10+43.37 and **replace** with new Drawing B-PP-159: Plan and Profile, Butte Drive, Sta 1+42.46 to Sta 10+43.37 attached to this Addendum.
	B-PP-160	**Delete** existing Drawing B-PP-160: Plan and Profile, Inyo Street, Sta. 0+85.80 to Sta. 11+46.17 and **replace** with new Drawing B-PP-160: Plan and Profile, Inyo Street, Sta. 0+85.80 to Sta. 11+46.17 attached to this Addendum.
	B-PP-167A	**Delete** existing Drawing B-PP-167: Plan and Profile – FM, Donna Avenue, Sta. 10+68.32 to Sta. 14+60.32 and **replace** with new Drawing B-PP-167A: Plan and Profile, Donna - Sta. 14+45.24 to Sta. 15+06.76 and Lupine - Sta. 3+06.76 to Sta. 5+43.32 attached to this Addendum..
	B-PP-167B	**Add** Drawing B-PP-167B: Plan and Profile – FM, Fearn Avenue, Sta. 10+66.00 to Sta. 14+95.62 attached to this Addendum.
	B-PP-168A	**Delete** existing Drawing B-PP-168: Plan and Profile – FM, Binscarth Road, Sta. 15+40.88 to Sta. 22+58.35 and **replace** with new Drawing B-PP-168A: Plan and Profile – FM, Binscarth Road, Sta. 17+76.62 to Sta. 22+58.35 attached to this Addendum.
	B-PP-175	**Add** Drawing B-PP-175: Plan and Profile, Solano Street Force Main, Sta. 1+06.94 to Sta. 7+82.65 attached to this Addendum.
	B-C-200	**Add** symbol and following callout for new Solano Pump Station located on the east side of Solano Street between Skyline Drive and Butte Drive: "SOLANO PS, SEE SHEET B-C-205".
	B-C-201	**Delete** existing Drawing B-C-201: Lupine PS & Standby Power Site Plan and **replace** with new Drawing B-C-201: Lupine PS & Standby Power Site Plan attached to this Addendum.
	B-C-201A	**Add** Drawing B-C-201A: Solano PS and Standby Power Site Plan attached to this Addendum.

	C-C-201	**Add** the following under Notes: "4. CONTRACTOR shall notify Sunny Oaks Mobile Home Park at least 30 days in advance by US Mail of any construction activities at the Sunny Oaks PS site. Construction activities shall be conducted in a manner to maintain driveway ingress and egress to the Mobile Home Park at all times. The CONTRACTOR's access to the site shall be developed from Los Osos Valley Road and shall not utilize the Mobile Home Park driveway. 5. CONTRACTOR may temporarily remove the Sunny Oaks Mobile Home Park entrance sign and associated lighting for the duration of construction activities. If removed, the sign and lighting shall be restored to original condition after construction activities are completed."
	B-L-202	**Delete** existing Drawing B-L-202: Palisades Harvest Well, Irrigation Plan and **replace** with new Drawing B-L-202: Palisades Harvest Well, Irrigation Plan attached to this Addendum.
	B-L-202A	**Add** Drawing B-L-202A: Solano Pump Station – Irrigation Plan attached to this Addendum.
	B-L-205	**Delete** existing Drawing B-L-205: Palisades Harvest Well, Planting Plan and **replace** with new Drawing B-L-205: Palisades Harvest Well, Planting Plan attached to this Addendum.
	B-L-205A	**Add** Drawing B-L-205A: Solano Pump Station – Planting Plan attached to this Addendum.
	BC-S-201	**Add** the following column to the table in the lower left corner of the Drawing: "PUMPS DUPLEX SITE LOCATION SOLANO SUBMERSIBLE PS GRD ELE 2.64' SUBMERSIBLE PS FIN FLR ELE 1'-5" MIN SHEAR KEY DEPTH 9'-5" VALVE VAULT FIN GRD ELE 16.10' CLEANOUT VAULT FIN GRD ELE 16.20' "
	BC-S-202	**Add** the following row to the table in the lower right corner of the Drawing: "STANDBY POWER FACILITY BUILDING DIMENSIONS SOLANO 25'-4" X 14'-8" "
	B-A-200	**Add** the following row to the Dimension Table in the upper left corner of the Drawing: "STANDBY POWER FACILITY BUILDING DIMENSIONS SOLANO 25'-4" X 14'-8" "
	BC-M-200	**Add** the following column to the table in the upper right corner of the Drawing:

		"DESCRIPTION SOLANO AREA B PUMP NO. SA-P-01 & 02 NUMBER OF PUMPS 2 DESIGN FLOW EACH PUMP (GPM) 243 DESIGN TDH 84 PUMP HP 20 TOP WETWELL SLAB ELEVATION (FT) 15.64 WETWELL FLOOR ELEVATION 2.64 WETWELL DEPTH (FT) 13 WETWELL DIA (FT) 10 INLET PIPING SIZE (IN) 8 NUMBER OF INLETS 1 INLET PIPING INVERT ELEVATION (FT) 6.00 DISCHARGE PIPING SIZE (IN) 4 FORCE MAIN SIZE (4) 4 FORCE MAIN ELEVATION (FT) 12.14 HIGH HIGH ALARM ELEVATION (FT) 13.64 HIGH ALARM ELEVATION (FT) 9.64 PUMP ON ELEVATION (FT) 3.64 PUMP OFF ELEVATION (FT) 1
	BC-M-203	**Add** the following row to the table in the upper left corner of the Drawing: "STANDBY POWER FACILITY GENERATOR FUEL TYPE SOLANO 50 KW NATURAL GAS"
	BC-GE-005	**Add** LU-AIT-1 to Mini Power Center Schedule at Breaker 10 with note "(Lupine PS Only)".
	BC-E-200	**Add** the following row to Table 2 in the upper right corner of the Drawing: "PUMP STATION MCC DIM. ATS DIM. FILTER DIM. RTU DIM. SOLANO 90", 40", 20" 90", 48", 20" 36", 36", 20" "
	BC-E-200	**Add** smoke detecter in the Standby Power Building with 3/4"C, 2#14, 2#14SP, & 1#14GRD from the smoke detector to RTU Panel.
	BC-E-200	**Add** LU-AIT-1 to wall adjacent to LIT-1 with note "(Lupine PS Only)". **Add** the following under Notes:

		"6. PROVIDE 1"C; 2- 2/C #16 SHLD FROM LIT-1 AND AIT-1 (FOR LUPINE PS) TO RTU. FOR STANDBY POWER FACILITIES OTHER THAN LUPINE THE SECOND SHIELDED PAIR SHALL BE SPARE."
	BC-E-201	**Add** "Solano PS" beneath the Submersible Pump Stations heading for Baywood, East Paso, East Ysabel, & Sunny Oaks for the control logic diagram on the left side of the Drawing.
	B-E-200	**Add** symbol and following callout for new Solano Pump Station located on the east side of Solano Street between Skyline Drive and Butte Drive: "SOLANO PS, SEE SHEET B-C-201A".
	B-E-201	**Add** LU-AE-1 to Lupine Pump Station wet well. **Delete** the words "… [1"C; (2)#10 & (1)#10 GND] …" in Note 2 and **replace** with the following: "… [1"C; (3)#10 & (1)#10 GND] …". **Delete** the words "… SIGNAL DUCTBANK SHALL INCLUDE [1"C; CABLE PROVIDED BY MANUFACTURER] …" in Note 2 and **replace** with the following: "…SIGNAL DUCTBANK SHALL INCLUDE [1"C; CABLE PROVIDED BY MANUFACTURER FROM LU-LE-1 To LU-LIT-1] and [1"C; 2/C#16 SHLD FROM LU-AE-1 To LU-AIT-1]. SEE DWG BC-E-200 FOR LOCATIONS OF LU-LIT-1 AND LU-AIT-1. …".
	B-E-201	**Add** the following under Notes: "5. Refer to Drawing B-C-201 for specific location and orientation of pump station wet well, valve vault, and standby power building."
	B-E-201A	**Add** Drawing B-E-201A: Solano Submersible Pump Station Site, Electrical Power, Lighting, & Grounding Plan attached to this Addendum.
	B-E-202A	**Add** Drawing B-E-202A: Solano PS & Standby Power, Single Line attached to this Addendum.
	B-E-204	**Add** smoke detecter in the Harvest Well Building with 3/4"C, 2#14, 2#14SP, & 1#14GRD from the smoke detector to Control Panel.
	B-E-206	**Add** smoke detecter in the Harvest Well Building with 3/4"C, 2#14, 2#14SP, & 1#14GRD from the smoke detector to Control Panel.
	BC-GI-202	**Add** "Solano" under Submersible Pump Stations heading next to Radio Communications block in upper right of Drawing.
	B-I-201	**Add** duplex submersible pump station P&ID for new Solano Pump Station equivalent to Sunny Oaks Pump Station P&ID shown on Drawing C-I-200: Sunny Oaks Pump Station P&ID. All tag numbers shall be prefixed by SL -.
	B-I-201	**Add** combustible gas detector LU-AE-1 and remote LEL transmitter LU-AIT-1.
	Vol. V	
	AD-GC-060	**Add** the following note to Standard Detail C-102, Sewer Drop Manhole:

		"5. MANHOLE INTERIOR SHALL BE PVC-LINED. COAT MANHOLE SHELF AREA WITH EPOXY: POLYBIRD, EUCOPOXY, OR EQUAL."
	AD-GC-061	**Delete** the asphalt concrete and aggregate base thickness information on Standard Detail C-120 and **replace** with the following: "Arterial Roads: 4.5-inches AC, 6-inches AB Collector Roads: 4-inches AC, 4.5-inches AB Minor Roads: 3-inches AC, 4-inches AB" **Add** the following streets to the Collector Roads column on Standard Detail C-120: "Los Olivos Avenue Bayview Heights Drive"
	AD-GC-069	**Add** Drawing AD-GC-069: Pavement Replacement Map.
	A-PP-180	**Delete** existing Drawing A-PP-180: 4th Street, Sta 34+97.87 to Sta 41+28.92 and **replace** with new Drawing A-PP-180: 4th Street, Sta 34+97.87 to Sta 41+55.08 attached to this Addendum.
	A-PP-181	**Delete** existing Drawing A-PP-181: Santa Lucia Avenue, Sta 1+64.51 to Sta 11+56.91 and **replace** with new Drawing A-PP-181: Santa Lucia Avenue, Sta 1+64.51 to Sta 10+99.16 attached to this Addendum.
	A-PP-182	**Delete** existing Drawing A-PP-182: 3rd Street, Sta 31+92 to Sta 35+02.83 and **replace** with new Drawing A-PP-182: 3rd Street, Sta 31+92 to Sta 34+66.89 attached to this Addendum.
	A-C-206	**Delete** existing Drawing A-C-206: PPS 04A, 07A, 08A, 09A Site Plans and **replace** with new Drawing A-C-206: PPS 04A, 07A, 08A, 09A Site Plans attached to this Addendum.
	A-C-210	**Delete** existing Drawing A-C-210: Erosion Control Plan - 3 and **replace** with new Drawing A-C-210: Erosion Control Plan - 3 attached to this Addendum.
	D-C-202	**Add** the following under Notes: "3. CONTRACTOR shall notify adjoining property owner Dr. Knighton at least 30 days in advance by US Mail of any construction activities at the Standby Power Facility site. The CONTRACTOR shall complete all work in the temporary construction easement between the site and Mountain View Avenue within a six month period. All fencing, landscaping, and irrigation improvements within the temporary and permanent easement shall be restored to original condition. The desription of the temporary and permanent easement will be furnished by the OWNER upon request of the CONTRACTOR."
	AD-M-200	**Delete** the values for elevations shown in the Pocket Pump Station Schedule in the upper right corner of the Drawing under the "04A" column and **replace** with the following values: "TOP WETWELL SLAB ELEVATION (FT) 18.04

		WET WELL FLOOR ELEVATION (FT) 7.04 WET WELL DEPTH (FT) 13 INLET PIPING INVERT ELEVATION (FT) 12.05 14.69 FORCE MAIN CENTERLINE ELEV. (FT) 15.84 HIGH HIGH ALARM ELEVATION (FT) 17.04 HIGH ALARM ELEVATION (FT) 14.04”
	AD-GE-005	**Add** WP-AIT-1 to Mini Power Center Schedule (West Paso PS) at Breaker 14.
	AD-E-202	**Add** smoke detecter in the Standby Power Building with 3/4”C, 2#14, 2#14SP, & 1#14GRD from the smoke detector to RTU Panel.
	A-E-201	**Relocate** Pocket Pump Station (PPS) 04A and associated electrical work to the positions shown on Drawing A-C-206: PPS 04A, 07A, 08A, 09A Site Plans attached to this Addendum.
	A-E-204	**Add** WP-AE-1 to Lupine Pump Station wet well. **Delete** the words “… [1”C; (2)#10 & (1)#10 GND] …” in Note 1 and **replace** with the following: “… [1”C; (3)#10 & (1)#10 GND] …”. **Delete** the words "... SIGNAL DUCTBANK SHALL INCLUDE [1"C; CABLE PROVIDED BY MANUFACTURER] ..." in Note 1 and **replace** with the following: "... SIGNAL DUCTBANK SHALL INCLUDE [1"C; CABLE PROVIDED BY MANUFACTURER FROM WP-LE-1 To WP-LIT-1 LOCATED IN NEMA 3R NON-WALKIN ENCLOSURE] and [1"C; 2/C#16 SHLD FROM WP-AE-1 TO WP-AIT-1 LOCATED IN NEMA 3R NON-WALKIN ENCLOSURE] ...". **Add** “WP-AIT-1” in Note 2 to be included in enclosure.
	A-E-211	**Add** smoke detecter in the Harvest Well Building with 1”C, 2#14, 2#14SP, & 1#14GRD from the smoke detector to RTU Panel located in the East Paso Standby Power Building.
	D-E-202	**Add** the following under Notes: “7. CONTRACTOR shall notify adjoining property owner Dr. Knighton at least 30 days in advance by US Mail of any construction activities at the Standby Power Facility site. The CONTRACTOR shall complete all work in the temporary construction easement between the site and Mountain View Avenue within a six month period. All fencing, landscaping, and irrigation improvements within the temporary and permanent easement shall be restored to original condition. The description of the temporary and permanent easement will be furnished by the OWNER upon request of the CONTRACTOR.”
	AD-GI-202	**Add** “Solano” under <u>Submersible Pump Stations</u> heading next to Radio

		Communications block in upper right of Drawing.
	A-I-201	**Add** combustible gas detector WP-AE-1 and remote LEL transmitter WP-AIT-1 to the West Paso Pump Station.
	Vol. VIA	
	40-GC-01	**Delete** existing Drawing 40-GC-01: General Site Plan and **replace** with new Drawing 40-GC-01: General Site Plan attached to this Addendum.
	40-GC-03	**Add** Detail C-305: Pressurized System Cleanout To Grade attached to this Addendum.
	41-C-01	**Delete** existing Drawing 41-C-01: Key Plan and **replace** with new Drawing 41-C-01: Key Plan attached to this Addendum.
	41-C-03	**Delete** existing Drawing 41-C-03: Demolition Plan and **replace** with new Drawing 41-C-03: Demolition Plan attached to this Addendum.
	41-C-05	**Delete** existing Drawing 41-C-05: Horizontal Control and Paving Plan - 2 and **replace** with new Drawing 41-C-05: Horizontal Control and Paving Plan – 2 attached to this Addendum.
	41-C-06	**Revise** alignment of screen walls J and K at their intersection with screen wall N as shown in Drawing 41-C-08: Horizontal Control, Screen Walls, Bike Paths, & Ponds attached to this Addendum.
	41-C-07	**Delete** existing Drawing 41-C-07: Horizontal Control and Paving Plan - 4 and **replace** with new Drawing 41-C-07: Horizontal Control and Paving Plan - 4 attached to this Addendum.
	41-C-08	**Delete** existing Drawing 41-C-08: Horizontal Control, Screen Walls, Bike Paths, & Ponds and **replace** with new Drawing 41-C-08: Horizontal Control, Screen Walls, Bike Paths, & Ponds attached to this Addendum.
	41-C-08A	**Add** Drawing 41-C-08A: Horizontal Control, Curve and Workpoint Tables attached to this Addendum.
	41-C-10	**Delete** existing Drawing 41-C-10: Drainage and Grading Plan - 2 and **replace** with new Drawing 41-C-10: Drainage and Grading Plan – 2 attached to this Addendum.
	41-C-11	**Revise** alignment of screen walls J and K at their intersection with screen wall N as shown in Drawing 41-C-08: Horizontal Control, Screen Walls, Bike Paths, & Ponds attached to this Addendum.
	41-C-12	**Delete** existing Drawing 41-C-12: Drainage and Grading Plan - 4 and **replace** with new Drawing 41-C-12: Drainage and Grading Plan – 4 attached to this Addendum.
	41-C-13	**Add** three 4”PW pipeline connections from 8”PW pipeline loop in courtyard area with Fire Department Riser Connection per Detail M-921 to the Residuals Building, Treatment Building, and Operations Building for the fire protection systems specified in Section 15151 - Wet Pipe Sprinkler System.
	41-C-14	**Delete** existing Drawing 41-C-14: Yard Piping Plan - 2 and **replace** with new Drawing 41-C-14: Yard Piping Plan - 2 attached to this Addendum.

	41-C-15	**Revise** alignment of screen walls J and K at their intersection with screen wall N as shown in Drawing 41-C-08: Horizontal Control, Screen Walls, Bike Paths, & Ponds attached to this Addendum.
	41-C-17	**Delete** existing Drawing 41-C-17: Yard Piping, Coordinates Table and **replace** with new Drawing 41-C-17: Yard Piping, Coordinates Table attached to this Addendum.
	41-C-41	**Delete** paving, curb and gutter, and sidewalks from Station 4+80 to Station 7+10.53. **Retain** grading and drainage as shown. **Relocate** temporary wood beam barricade from Station 7+10.53 to Station 4+80.
	41-L-01	**Add** the following rows to the Construction Legend table on the left side of the Drawing: "No. Description Detail Reference 32 Construct wood picnic table Detail A, Sheet 41-l-11B 33 Provide and install a tot lot Detail C, Sheet 41-l-11A 34 Construct amphitheater stage Detail C, Sheet 41-l-11B 35 Construct resilient surfacing at tot lot Detail B, Sheet 41-l-11A 36 Construct concrete seatwall at tot lot Detail A, Sheet 41-l-11A 37 Construct steel planter box Detail B, Sheet 41-l-11B 38 2'H x 4'L x 12" Thick Monument (NIC) NA"
	41-L-03	**Delete** existing Drawing 41-L-03: Construction Plan and **replace** with the new Drawing 41-L-03: Construction Plan attached to this Addendum.
	41-L-05	**Delete** existing Drawing 41-L-05: Construction Plan and **replace** with the new Drawing 41-L-05: Construction Plan attached to this Addendum.
	41-L-11A	**Add** Drawing 41-L-11A: Construction Details I attached to this Addendum.
	41-L-11B	**Add** Drawing 41-L-11B: Construction Details II attached to this Addendum.
	41-L-13	**Delete** existing Drawing 41-L-13: Irrigation Plan and **replace** with the new Drawing 41-L-13: Irrigation Plan attached to this Addendum.
	41-L-14	**Delete** existing Drawing 41-L-14: Irrigation Plan and **replace** with the new Drawing 41-L-14: Irrigation Plan attached to this Addendum.
	41-L-16	**Delete** existing Drawing 41-L-16: Irrigation Plan and **replace** with the new Drawing 41-L-16: Irrigation Plan attached to this Addendum.
	41-L-19	**Delete** existing Drawing 41-L-19: Planting, Legend & Notes and **replace** with the new Drawing 41-L-19: Planting, Legend & Notes attached to this Addendum.
	41-L-20	**Delete** existing Drawing 41-L-20: Planting, Legend & Notes and **replace** with the new Drawing 41-L-20: Planting, Legend & Notes attached to this Addendum.
	41-L-21	**Delete** existing Drawing 41-L-21: Planting Plan and **replace** with the new Drawing 41-L-21: Planting Plan attached to this Addendum.

	41-L-22	**Delete** existing Drawing 41-L-22: Planting, Legend & Notes and **replace** with the new Drawing 41-L-22: Planting, Legend & Notes attached to this Addendum.
	41-L-23	**Delete** existing Drawing 41-L-23: Planting Plan and **replace** with the new Drawing 41-L-23: Planting Plan attached to this Addendum.
	41-S-05	**Add** Drawing 41-S-05: Site Work, Public Restroom attached to this Addendum.
	41-S-06	**Add** Drawing 41-S-06: Site Work, Public Restroom, Sections and Detail attached to this Addendum.
	41-A-01	**Add** Drawing 41-A-01: Public Restroom Building, Floor Plan attached to this Addendum.
	41-A-02	**Add** Drawing 41-A-02: Public Restroom Building, Elevations attached to this Addendum.
	41-A-03	**Add** Drawing 41-A-03: Public Restroom Building, Sections attached to this Addendum.
	41-A-04	**Add** Drawing 41-A-04: Public Restroom Building, Reflected Ceiling Plan attached to this Addendum.
	41-A-05	**Add** Drawing 41-A-05: Public Restroom Building, Architectural Details attached to this Addendum.
	41-A-06	**Add** Drawing 41-A-06: Public Restroom Building, Interior Elevations attached to this Addendum.
	Vol. VIB	
	40-GM-14	**Add** Detail M-921 – Fire Department Riser Connection attached to this Addendum.
	41-H-01	**Add** Drawing 41-H-01: Public Restroom Building, Plumbing & HVAC attached to this Addendum.
	40-E-01	**Delete** existing Drawing 40-E-01: Electrical Site Plan, Power and **replace** with new Drawing 40-E-01: Electrical Site Plan, Power attached to this Addendum.
	40-E-02	**Delete** existing Drawing 40-E-02: Electrical Site Plan, Lighting and **replace** with new Drawing 40-E-02: Electrical Site Plan, Lighting attached to this Addendum.
	40-E-10	**Add** the following rows to the lighting fixture table on the left side of the Drawing: "Type Volts Description Manufacturer L 120 2-32 fluorescent, surface mounted fixture, 48' long, white polycarbonate lens, electronic ballast for T8 lamps Lithonia, VDS232PCLW120GEB, or equal M 120 2-13W square compact Lithonia,

		fluorescent fixture, electronic ballast, vandal resistant — VR4C2/13TT120DWHGGLRLPI or equal N 120 2-13W round compact fluorescent fixture, electronic ballast, vandal resistant — Lithonia, VGR12/13TT120DWHGGLRLPI or equal O 120 Same as Type L except corner mounted, 48' long — Lithonia, VDC232PCLW120GEB, or equal"
	40-E-10	**Add** "PB-5P" to the row for "PB-3P and PB-4P" in the Pullbox / Manhole Schedule table on the right side of the Drawing.
	41-E-01	**Add** combustible gas sensor 41-AE-101, associated junction box, and home run with callout for Note 7 to Influent Pump Station wet well adjacent to 41-LE-201. **Add** the following under Notes: "7. 1"C, 2/C #16 SHLD TO 41-AIT-101 LOCATED IN RESIDUALS BUILDING. SEE DRAWING 42-E-03 FOR LOCATIONS."
	41-E-02	**Add** Drawing 41-E-02: Public Restroom, Power, Lighting and Grounding Plan attached to this Addendum.
	42-E-03	**Add** 41-AIT-101 adjacent to 41-LIT-201 with two conduit and conductor home runs with callouts for Cable and Conduit Notes 2 and 6. **Add** 42-AE-501 to septage holding tank foul air duct at the north end of the workshop and 42-AIT-501 at the north wall of the workshop with conduit and conductor home run with callout for Cable and Conduit Note 6. **Delete** the words in Cable and Conduit Note 2 "... FOR EACH LIT & FIT AND WIRE COMPLETE ..." and **replace** with the following: "… FOR EACH LIT, FIT, & AIT AND WIRE COMPLETE ...". **Add** the following under Cable and Conduit Notes: "6. PROVIDE 1"C, 2/C #16 SHLD FROM 41-AE-101 TO 41-AIT-101 AND FROM 42-AE-501 TO 42-AIT-501. SEE DWG 41-E-01 FOR LOCATION OF 41-AE-101."
	42-E-11	**Add** 41-AIT-101 to UPS Panel "42-UPS" at Breaker 15.
	43-E-03	**Add** 150AF/15AT circuit breaker to Motor Control Center 43-MCC-03 at location 4 to serve electrical panel 41-MPC-01 for public restrooms.
	43-E-06A	**Delete** callout "MS-1, 8(4"CO)" at north wall and replace with the following callout: "MS-1, MS-5X, MS-6X, 43MCC3-4" **Add** three 4"CO to adjoining conduit arrangement. **Delete** associated callout "3x4 Conduit Arrangement (10) 4"C w/ 1" Separation." and replace with the following callout: "3x5 Conduit Arrangement, 13 – 4" C with 1" Separation."

	43-E-07A	**Add** conduit 43MCC3-4 from Motor Control Center 43-MCC-03 to Pullbox PB-1PA.
	43-E-17	**Add** the following entries to the Conduit/Cable Schedule in the row following 43MCC3-3: "<u>Conduit No.</u> <u>Size</u> <u>Power</u> <u>Control</u> <u>From</u> <u>To</u> 43MCC3-4 4 3#8, 1#10 GRD 43-MCC-03 41-MPC-01 1A-1C 1 10#14, 1#14 GRD I/O#3 Restroom Intrusion Alarms FA3 2 4-2/C #18 (SHLD) 43-FATC Restroom Smoke Detectors <u>Remarks</u> 40-E-01 40-E-01 40-E-01, 41-E-01"
	GI-05	**Add** "Solano" under <u>Submersible Pump Stations</u> heading next to Radio Communications block in upper right of Drawing.
	41-I-02	**Add** combustible gas detector 41-AE-101 and remote LEL transmitter 41-AIT-101 to the Influent Pump Station.
	42-I-06	**Add** combustible gas detector 42-AE-501 and remote LEL transmitter 42-AIT-501 to the Septage Tank Exhaust Fan.

SECTION 08305 - ACCESS DOORS

PART 1 – GENERAL

1.1 WORK INCLUDED - Work specified herein shall pertain to the Public Restroom and includes, but is not necessarily limited to:

A. Access Doors in walls and ceilings as shown on the plans and as required to provide access to plumbing, mechanical, or other equipment or fixtures in walls or attic spaces.

1.2 RELATED WORK DESCRIBED ELSEWHERE

A. Section 06100 Rough Carpentry
B. Section 06200 Finish Carpentry
C. Section 07213 Batt Insulation
D. Section 09900 Painting & Staining
E. Division 15 Plumbing and Mechanical
F. Division 16 Electrical

1.3 QUALITY ASSURANCE

A. **Installer:** Work to be performed only by workers thoroughly skilled and specially trained in the techniques of access door installation, and who are completely familiar with the published recommendations of the manufacturer of the material being used.

1.4 SUBMITTALS

A. **Product Data**: Submit material specifications, manufacturer's installation, and maintenance instructions under provisions of Section 01300.

1.5 PRODUCT HANDLING

A. Protection

1. Access doors to be stored at the job site in a safe, dry place with all labels intact and legible at time of installation.

2. Use all means to protect access doors before, during, and after installation. Do not allow products to become wet or damp.

B. Replacements

1. In the event of damage, immediately make all repairs and replacements necessary to the approval of the Architect and at no additional cost to the Owner.

PART 2 – PRODUCTS

2.1 CEILING ACCESS DOORS

A. Manufacturer:

a. Milcor, Inc.

b. Or approved equal

B. Access at drywall ceiling or wall: Milcor MS, opening 24 ½ x36 ½ U.N.O.

C. Access at fire rated gypsum wall or ceiling, Milcor UFR, opening 24x30 U.N.O.

2.2 PRODUCT

A. Style MS, Stainless Steel: 16-gauge stainless steel frame and door panel with satin finish.

B. Hinges. Concealed spring hinges open to 175 degrees. Extracting pin from hinge leaf attached to panel permits panel removal.

C. Lock: Provide 3 pin cylinder locks for securing door; provide 5 keys to owner.

PART 3 – EXECUTION

3.1 INSPECTION

A. Verify wall openings and adjoining air and vapor seal materials are ready to receive work of this Section.

B. Beginning of installation means acceptance of existing conditions.

3.2 INSTALLATION

A. Install access doors in accordance with manufacturer's instructions.

B. Use anchorage devices to securely attach door assembly to structure.

C. Align assembly plumb and level, free of warp or twist. Maintain assembly dimensional tolerances, aligning with adjacent work.

D. Coordinate installation with adjacent finish materials.

E. Screws, bolts, nuts, and other fastening devices shall be concealed or if exposed shall be of stainless steel.

F. Conceal flange when door is installed in gypsum drywall.

3.3 CLEANING

A. Remove protective materials from pre-finished surfaces.

B. Wash down exposed surfaces using a solution of mild detergent n warm water, applied with soft, clean wiping cloths. Wipe surfaces clean.

C. Remove any debris from the site.

END OF SECTION

SECTION 08620 - TUBULAR SKYLIGHTS

PART 1 – GENERAL

1.1 WORK INCLUDED - Work specified herein shall pertain to the Public Restroom and includes, but is not necessarily limited to:

A. Provide all labor, materials, tools, and services to install tubular skylight system and related components as shown on drawings and specified herein.

1.2 RELATED WORK DESCRIBED ELSEWHERE

Drawings and general provisions of the Contract, including General Conditions and Division 1 Specification Sections, apply to this Section

A.	Section 06100	Rough Carpentry
B.	Section 07320	Roof Tile
C.	Section 07600	Metal Flashing and Trim
D.	Section 09520	Gypsum Board Assemblies
E.	Division 15	Plumbing and Mechanical
F.	Division 16	Electrical

1.3 REFERENCES

A. ASTM B209 Specification for Aluminum and Aluminum Alloy Sheet and Plate.

B. ASTM A653 Steel Sheet, Zinc-Coated Or Zinc-Iron Alloy-Coated, By The Hot-Dip Process.

C. ASTM A463 Steel-Sheet, Aluminum-Coated, By The Hot-Dip Process.

D. ATSM A1008 Steel Sheet, Cold-Rolled, Carbon And Structural, High-Strength, Low-Alloy Sheet Products.

E. ICBO-ES AC-16 Acceptance Criteria for Plastic Skylights.

F. U.B.C. Standard 26-5 (ASTM D2843) Chamber Method of Test for Measuring the Density of Smoke from the Burning or Decomposition of Plastic Materials.

G. U.B.C. Standard 26-6 (ASTM D1929) Ignition Properties of Plastics.

H. U.B.C. Standard 26-7 (ASTM D635) Method of Test for Determining Classification of Approved Light-Transmitting Plastics.

I. U.B.C. Standard 8-1 (ASTM E-84) Test Method for Surface Burning Characteristics of Building Materials.

J. ASTM E330- Structural Performance of Exterior Windows, Curtain Walls, and Doors by Uniform Static Air Pressure Difference.

K. ASTM E331- Water Penetration of Exterior Windows, Curtain Walls, and Doors by Uniform Static Air Pressure Difference.

1.4 QUALITY ASSURANCE

A. General:

1. Provide certified independent laboratory test reports in full accord with test procedures listed below.

2. Provide tubular skylight system, which has been evaluated and approved by ICBO and maintains a current Evaluation Report.

B. Test Units: Perform all tests unless otherwise noted per reference standards on unit size(s), which will be incorporated into the project.

C. Test Procedures:

1. Air Infiltration Test: Air Infiltration maximum 0.10 cfm per foot of crack length at 6.24 psf pressure differential when tested in accordance with ASTM E283.

2. Water Resistance Test: No uncontrolled water leakage at 6.00 psf pressure differential with water rate of 5 gallons/hours/sf when tested in accordance with ASTM E331.

3. Uniform Load Deflection Test:

a. No breakage, permanent damage to fasteners, hardware parts, or damage to make tubular skylight inoperable at both a positive and a negative load of 146.8 psf.

b. All tests shall be in accordance with ASTM E330.

Reference Note: Design wind pressures are obtained from ANSI A58.1, local building codes or specified boundary layer wind tunnel data.

4. Uniform Load Structural Test:

a. Unit to be tested at 3x positive wind pressure and 2x negative wind pressure, acting normal to plane of roof in accordance with ASTM E330.

b. No breakage, permanent damage to fasteners, hardware parts, or damage to make tubular skylight inoperable or permanent deflection of any section in excess of 0.2 % of its span.

1.5 SUBMITTALS

A. Shop Drawings/Samples:

1. Shop drawings complete and full scale (where practical) showing construction of all components, dimensions, and details.

2. Samples of product as requested by the Architect.

B. Test Reports/Calculations:

1. Certified independent laboratory test reports verifying compliance with all test requirements of paragraph 1.03 of this section.

1.6 WARRANTY – TUBULAR SKYLIGHT AND RELATED MATERIALS:

A. Ten-year warranty on materials and work quality from the manufacturer.

B. One-year warranty from the installer for materials and labor.

PART 2 – PRODUCTS

2.1 ACCEPTABLE MANUFACTURERS

A. Solatube International, Inc., 2210 Oak Ridge Way, Vista, CA 92083-8341, (760) 597-4400. This is approved for use and is the design standard.

B. Or approved equal.

C. Manufacturers shall have been engaged in the manufacture of tubular skylights for a period of not less than ten (10) years.

2.2 MATERIALS

A. Roof Dome: 18” -inch diameter Solatube

1. I Molded polycarbonate classified as CC1 material. Thickness shall not be less than 0.125 inches. Visible light transmission shall be 90% at 0.125 inches. Load carrying capacity should be 100 psf (with a safety factor of 3) or greater.

2. LITD™: Light Intercepting Transfer Device – Internal reflector housed inside dome cavity. Made in the same material as the main tube. Optimized shape to capture low angle sunlight.

B. Roof Base/Flashing:

1. One-piece, seamless, self-flashing, leak-proof 4-, 8-, 11-inch high or curb-mount Zinc or Aluminized coated sheet metal (Steel) flashing, 0.028 inches thick; meeting the requirements of ASTM A653, ASTM A463, and ATSM A1008.

2. Alternate: One-piece, seamless, self-flashing, leak-proof 4- or 8-inch high aluminum flashing, 0.060 inches thick A93003.

C. Main Tube:

1. Fabricate substrate material from Aluminum sheet (0.015 inches – 0.020 inches thick) meeting the requirements of ASTM B209. Alloy and temper as required by the manufacturer to suit forming operations and finish requirements.

2. Finish – Provide exposed reflective surface with high reflectance specular finish meeting AAMA designation M21C31A31. Reflective surface to be Spectralight™ Infinity with a specular reflectance of 99% and total reflectance of over 99%.

D. Transition Box

1. Type-1: Attic or ducted return spaces: 2’ x 2’ transition box to be formed from opaque polymeric material classified as CC2 material. Nominal thickness shall not be less than 0.060 inches.

E. Sealed Ceiling Diffuser:

1. Type-1: For Suspended or Hard Ceiling Applications:

a. Molded acrylic plastic classified as CC2 material or polycarbonate classified as CC1 material. Thickness shall not be less than 0.028. inches. Provide OptiView® Fresnel lens design to maximize light output and diffusion.

b. Visible Light Transmission shall be 90% at 0.125 inches. Diffuser assemblies include seal to minimize condensation and bug/dirt infiltration. Type-1 diffuser to be installed into 2' x 2' Transition Box described above.

F. Features:

1. Diffuser frame to be extruded aluminum or polymeric material classified as CC1 material.

2. Seals:

a. Weather Seal: Medium density pile weather-stripping and light density polyvinyl chloride foam tape or UV resistant EPDM rubber.

b. Ceiling Diffuser Seal: Closed cell polyethylene foam, 3 pounds per cubic foot, and white polyvinyl chloride seal, butt joint welded, EPDM rubber, or silicone.

2. Fasteners shall be same as metals being fastened or non-magnetic stainless steel or other non-corrosive metal as recommended by the manufacturer.

2.3 FABRICATION

A. General:

1. Finish, fabricate, and shop prepare all assemblies under responsibility of one manufacturer.

2. Fabricate to allow for thermal movement of materials when subject to a temperature differential from -30 degrees F to +180 degrees F.

2. Provision shall be made to insure that water will not accumulate and remain in contact within system components.

PART 3 – EXECUTION

3.1 INSTALLATION

A. Install tubular skylights in accordance with manufacturer's printed installation instructions.

B. After installation of first unit, conduct field check to determine compliance with specified requirements. Water test in presence of Owner's Representative or Architect or Contractor Representative. Correct any deficiencies prior to commencing with subsequent units.

END OF SECTION

SECTION 10170 - SOLID COLOR REINFORCED COMPOSITE TOILET PARTITIONS

PART 1 – GENERAL

1.1 WORK INCLUDED - Wwork specified herein shall pertain to the Public Restroom and includes, but is not necessarily limited to:

A. Toilet Compartments
B. Urinal Screens

1.1 RELATED SECTIONS

A. Wall backing required to secure mounting brackets.
B. Support for floor-anchored urinal screens.
C. Toilet room accessories.

1.2 REFERENCES (including, but not limited to)

A. *National Fire Protection Association 101 Life Safety Code 2000 Edition*, Chapters 5, 6, 8-30.

B. *ANSI A117.1-1998 Specifications for Making Buildings and Facilities Accessible to and Usable by Physically Handicapped People*.

C. International Code Council, *International Building Code, 2000 Edition,* Chapters 5, 7 and 8.

D. Title 24, *California Code of Regulations,* Parts 2, 3, and 5.

E. ADA, *Accessibility Guidelines for Buildings and Facilities,* Federal Register Volume 56, Number 144, Rules and Regulations.

F. US Green Building Council (USGBC) *Leadership in Energy and Environmental Design (LEED) Program*, Version 2.1.

G. American Society for Testing and Materials Standards:

1. ASTM E84-01 Standard Test Method for Surface Burning Characteristics of Building Material.

2. ASTM D2794-93(1999)e1 Standard Test Method for Resistance of Organic Coatings to the Effects of Rapid Deformation (Impact).

3. ASTM D2197-98(2002) Standard Test Method for Adhesion of Organic Coatings by Scrape Adhesion.

4. ASTM D6578-00 Standard Practice for Determination of Graffiti Resistance.

1.4 PERFORMANCE REQUIREMENTS

A. Graffiti Resistance: Partition material shall have the following graffiti removal characteristics when tested in accordance with ASTM D6578-00 Standard Practice for

Determination of Graffiti Resistance in accordance with Section 9, "Graffiti Removal Procedure Using Manual Solvent Rubs":

1. Cleanability: Five (5) required staining agents shall be cleaned off material.

B. Scratch Resistance: Partition material shall have the following characteristics when tested in accordance with ASTM D2197-98(2002) Standard Test Method for Adhesion of Organic Coating by Scrape Adhesion, using Gardner Stock #PA-2197/ST pointed stylus attachment on scrape tester:

1. Scratch Resistance: Maximum Load Value shall exceed 10 kilograms.

C. Impact Resistance: Partition material shall have the following characteristics when tested in accordance with ASTM D2794-93(1999)e1 Standard Test Method or Resistance of Organic Coating to the Effects of Rapid Deformation (Impact), using .625" hemispherical indenter with 2-lb impact weight:

1. Impact Resistance: Maximum Impact Force value shall exceed 30 inch-lbs.

D. Fire Resistance: Partition material shall comply with the following requirements, when tested in accordance with ASTM E 84: Standard Test Method for Surface Burning Characteristics of Building Materials:

1. Smoke Developed Index: Not to exceed 450.

2. Flame Spread Index: Not to exceed 75.

3. Material Fire Ratings:

a. National Fire Protection Association (NFPA): Class B.
b. International Code Council (ICC): Class B.

1.5 SUBMITTALS

A. Comply with requirements of Section regarding submittals.

B. Manufacturer's Data

1. Provide required number copies of:

a. Product data sheets.
b. Installation instructions.
c. Cleaning and maintenance instructions.
d. Replacement parts information.

C. Shop Drawings

1. Provide required number of copies of all shop drawings.

2. Show fabrication and erection of compartment assemblies, to extent not fully described by manufacturer's data sheets.

3. Show anchorage, accessory items and finishes.

4. Provide location drawings for bolt hole locations in supporting members for attachment of compartments.

D. Samples

1. Furnish scale model of compartments, including stile, shoe, door, door hardware, divider panel, and mounting brackets.

2. Furnish sections showing stile anchoring and leveling devices, concealed threaded inserts, panel, stile, and edge construction.

1.6 PRODUCT DELIVERY, STORAGE, AND HANDLING

A. Deliver items in manufacturer's original unopened protective packaging.

B. Store materials in original protective packaging to prevent physical damage or wetting.

C. Handle so as to prevent damage to finished surfaces.

1.7 WARRANTY

A. Furnish ten-year limited warranty for panels, doors, and stiles against breakage, corrosion, delamination, and defects in factory workmanship.

B. Furnish one-year guarantee against defects in material and workmanship for stainless steel door hardware and mounting brackets.

PART 2 – PRODUCTS

2.1 MANUFACTURERS

A. Model numbers for toilet partitions manufactured by Bobrick Washroom Equipment, Inc. are listed to establish a standard of quality for design, function, materials, workmanship, and appearance. Other manufacturers may be submitted for evaluation by the architect by following the conditions of the substitutions clause. Unless approval is obtained ten days prior to the bid date, all bids shall be based on the standard of quality. The architect shall be the sole judge as to the acceptability of all products submitted for substitution.

B. Toilet partitions shall be the product(s) of a single manufacturer.

2.2 MOUNTING CONFIGURATIONS

A. Toilet Partitions shall be:

1. Overhead-Braced (1092/1092.67 Sierra™ Series)

2.3 COMPONENTS/MATERIALS

A. Stiles, Panels, Doors, and Screens

1. Stiles, Panels, Doors, and Screens shall be all be manufactured from Solid Color Reinforced Composite material.

B. Toilet Partition Material

1. Toilet partitions shall be constructed of Solid Color Reinforced Composite material, which is composed of dyes, organic fibrous material, and polycarbonate/phenolic resins. Material shall have a non-ghosting, graffiti resistant surface integrally bonded to core through a series of manufacturing steps requiring thermal and mechanical pressure. Edges of material shall be the same color as the surface.

2. Toilet partitions constructed of High Density Polyethylene (HDPE) or High Density Polypropylene will not be acceptable.

C. Finish Thickness

1. Stiles and doors shall be 3/4" (19 mm).
2. Panels and benches shall be 1/2" (13 mm).

D. Hardware

1. All hardware to be 18-8, type-304 stainless steel with satin finish.
2. Hardware of chrome-plated “Zamak”, aluminum, or extruded plastic is unacceptable.

E. Latch

Vandal-Resistant Option (.67):

1. Sliding door latch shall be 14 gauge (2 mm) and shall slide on nylon track.

2. Sliding door latch shall require less than 5-lb force to operate. Twisting latch operation will not be acceptable.

3. Latch track shall be attached to door by machine screws into factory installed threaded brass inserts.

4. Threaded brass inserts shall be factory installed for door hinge and latch connections and shall withstand a direct pull exceeding 1,500 lbs. per insert.

5. Through bolted, stainless steel, pin-in-head Torx sex bolt fasteners shall be used at latch keeper-to-stile connections and shall withstand direct pull force exceeding 1,500 lbs. per fastener

F. Hinges

Vandal-Resistant Option (.67):

1. Hinge shall be 16-gauge (1.6-mm) continuous piano hinge.

2. All doors shall be equipped with self-closing hinge.

3. Continuous piano hinge shall be attached to door and stile by theft resistant, pin-in-head Torx stainless steel machine screws into factory installed, threaded brass inserts.

4. Fasteners secured directly into the core are not acceptable.

5. Door shall be furnished with two 11-gauge (3-mm) stainless steel door stop plates with attached rubber bumpers to resist door from being kicked in/out beyond stile.
6. Door stops and hinges shall be secured with stainless steel, pin-in-head Torx machine screws into threaded brass inserts.

7. Threaded brass inserts shall withstand a direct pull force exceeding 1,500 lbs per insert.

G. Coat Hook

Vandal-Resistant Option (.67)*: Coat hook is not furnished.*

H. Mounting Brackets

Vandal-Resistant Option (.67): Through bolted, stainless steel, pin-in-head Torx sex bolt fasteners shall be used for panel-to-stile connections.

1. Mounting brackets shall be 18-gauge (1.2- mm) stainless steel and extend full height of panel.

2. U-channels shall be furnished to secure panels to stiles.

3. Angle brackets shall be furnished to secure stiles to walls and panels to walls.

4. Fasteners at locations connecting panels-to-stiles shall utilize through bolted, stainless steel, pin-in-head Torx sex bolt fasteners. Through-bolted fasteners shall withstand direct pull force exceeding 1,500 lbs. per fastener.

5. Wall mounted urinal screen brackets shall be 11 gauge (3 mm) double thickness.

I. Leveling Device shall be 7-gauge, 3/16" (5-mm) hot rolled steel bar; chromate treated and zinc-plated; through-bolted to base of solid color reinforced composite stile.

J. Stile Shoe shall be one-piece, 4" (102-mm) high, type-304, 22-gauge (0.8-mm) stainless steel with satin finish. Top shall have 90° return to stile. Shoe will be composed of one-piece of stainless steel and capable of being fastened (by clip) to stiles starting at wall line.

K. Headrail (Overhead Braced) shall be satin finish, extruded anodized aluminum (.125” / 3-mm thick) with anti-grip profile.

PART 3 – EXECUTION

3.1 INSPECTION

A. Check areas scheduled to receive compartments for correct dimensions, plumbness of walls, and soundness of surfaces that would affect installation of mounting brackets.

B. Verify spacing of plumbing fixtures to assure compatibility with installation of compartments.

C. Do not begin installation of compartments until conditions are satisfactory.

3.2 ERECTION

A. Install compartments rigidly, straight, plumb, and level and in accordance with manufacturer's installation instructions.

B. Installation methods shall conform to manufacturer's recommendation for backing and proper support.

C. Conceal evidence of drilling, cutting, and fitting to room finish.

D. Maintain uniform clearance at vertical edge of doors.

3.3 ADJUSTMENT AND CLEANING

A. Adjust hardware for proper operation after installation.

B. Set hinge cam on in-swinging doors to hold doors open when unlatched.

C. Set hinge cam on out-swinging doors to hold unlatched doors in closed position.

D. Clean exposed surfaces of compartments, hardware, and fittings.

END OF SECTION

SECTION 15151 - WET PIPE SPRINKLER SYSTEM

PART 1 -- GENERAL

1.1 THE REQUIREMENT

A. The CONTRACTOR shall design, furnish, and install a wet pipe sprinkler system for fire protection in accordance with the Contract Documents.

B. The CONTRACTOR shall review Drawings, perform complete fire protection system design, and install system, complete and operable, as specified herein and as required by NFPA. CONTRACTOR shall utilize the services of a certified fire protection engineer to design the wet pipe sprinkler system.

C. The CONTRACTOR shall obtain approvals of the wet pipe sprinkler system design from the Fire Marshall and the OWNER's Insurance Underwriter.

1.2 REFERENCE SPECIFICATION, CODES, AND STANDARDS

A. The wet pipe sprinkler system shall be designed and installed in accordance with indicated codes, standards, and regulations.

B. Codes

1. NFPA Standard 13 Installation of Sprinkler Systems

2. NFPA Standard 14 Standpipe, Hose Systems

3. California Fire Code

4. Uniform Fire Code

C. Standards

1. UL Underwriter's Laboratory

2. FM Factory Mutual

1.3 CONTRACTOR SUBMITTALS

A. Furnish submittals in accordance with Section 01300 - Contractor Submittals.

B. Shop Drawings shall include the following information:

1. Proposed layout of wet pipe sprinkler system.

2. Descriptive literature for materials and equipment.

3. Drawings which locate and detail piping, supports, sprinkler heads, valves, and related items.

4. Layout drawing showing only sprinkler head locations.

5. Submit drawings and hydraulic calculations of entire sprinkler system after review and approval of head locations by OWNER's Insurance Underwriter.

6. Written certification and approval of Fire Marshall.

C. OWNER's Manual

1. Drawings that show the "As Built" layout of the entire sprinkler and stand pipe systems.

2. Data conforming to NFPA Standard 13A - Sprinkler Maintenance.

3. Test reports that accurately record and report the methods of testing, times and dates of the test, witnesses to the test, and the results of the test. The test reports shall be neatly typewritten on standard 8-1/2 by 11-inch sheets and be submitted for acceptance within 5 Days after the test has been performed.

4. Include certification that flow calculations and tests have been completed and approved by authorities having jurisdiction.

1.4 QUALITY ASSURANCE

A. **Qualifications of Fire Protection Engineer**: The wet pipe sprinkler system shall be designed by Fire Protection Engineer licensed in the State of California. The Fire Protection Engineer shall have at least 5 years experience in design, installation, testing, and maintenance of fire protection sprinkler systems.

B. **Qualifications of Fire Protection Subcontractor**: The wet pipe sprinkler system shall be installed by a fire protection subcontractor licensed in California (C16). The Fire Protection Subcontractor shall have at least 5 years experience in installation, testing, and maintenance of fire protection sprinkler systems.

C. **Qualifications of Training Instructor**: The Fire Protection Subcontractor shall provide a Training Instructor to provide classroom and field instruction regarding the operation and maintenance of the wet pipe sprinkler system.

PART 2 -- PRODUCTS

2.1 GENERAL

A. The wet pipe sprinkler system shall be installed to provide a fire protection system for the first and second floors of the Residuals Building, the first and second floors of the Treatment Building, and the first floor of the Operations Building.

B. The wet pipe sprinkler system shall include piping, pipe supports, valves, sprinkler heads, fire riser, and associated specialties and appurtenances.

2.2 DESIGN CRITERIA

A. The wet pipe sprinkler system shall be designed and installed to comply with NFPA 13 – Installation of Sprinkler Systems.

B. The CONTRACTOR shall review the Drawings so that items affecting the operation of the fire protection systems such as fire detection equipment, air diffuser openings, ductwork, process equipment, door openings, electrical equipment, electrical conduits, and fire and smoke dampers are considered in the design of the system.

C. Furnish additional sprinkler heads that may be required for coordinated ceiling pattern without additional cost, even though number of heads may exceed minimum code requirements.

D. Piping sleeves shall be provided where piping passes through panels, walls, and floors. Sprinkler piping shall not pass through structural beams and columns.

E. Offset, crossover, and otherwise route piping to install system in available space. Piping and equipment shall be designed, routed, and arranged to maintain proper access and clearance to equipment items and maintenance areas without interfering with the function of the facility.

F. The sprinkler system shall be hydraulically designed for the hazard and areas indicated on Drawings, including flow for inside hose streams.

G. Any design criteria, whether or not given on the Drawings, shall be subject to the approval of the local and state authorities having jurisdiction.

H. Consult with local Fire Marshal for locations of fire hose cabinets and standpipe if required.

I. Sprinkler piping shall be sized using hydraulic calculations based on information obtained from the Water Utility.

2.3 SPRINKLERS

A. Sprinkler heads shall be standard spray, pendent type ceiling sprinklers as manufactured by **Automatic Sprinkler Corporation of America**, or equal. Sprinklers shall be standard pendant type for 1/2-inch orifice by 1/2-inch NPT. Sprinklers shall have temperature rating of 175 degrees F. The sprinkler shall be UL listed, FM approved, and limited to light/ordinary hazard occupancies.

B. Upright type standard sprinklers shall have chrome finish.

2.4 STEEL PIPE AND FITTINGS

A. **Piping:** Sprinkler system piping shall be ASTM A 53 - Steel Pipe, Black, and Hot-Dipped Zinc Coated Welded and Seamless, Schedule 40, galvanized seamless steel. Mechanical-type grooved end couplings with roll grooved piping will also be acceptable. Pipe shall have manufacturer's name or trademark clearly shown on each length.

B. **Fittings:** Fittings shall be galvanized malleable iron. Fittings, valves, and appurtenances shall have manufacturer's name or mark raised or cut into each body.

C. **Sleeves:** Sleeves shall be ASTM A 53 - Steel Pipe, Black, and Hot-Dipped Zinc Coated Welded and Seamless, Schedule 40, galvanized seamless steel.

D. **Unions:** Unions shall be galvanized malleable iron having female pattern, brass to iron seat, and ground joint. Unions shall be rated for minimum 150 psig working pressure.

E. **Fire Department Siamese Connection**: Fire department connection for standpipes and sprinklers shall be **Elkhart**, or equal, 2-1/2 by 2-1/2 by 6-inches polished brass exposed finish consisting of polished escutcheon lettered - "Standpipe" - "Auto-Spkr", angle body with individual clappers, and threaded brass plugs with chains. Provide 1/2-inch brass ball drip and arrangement to drain riser to the outside.

2.5 PIPE SUPPORTS

A. Approved pipe supports and hangers shall be installed and sized as required to carry the weight of pipe, contents, and insulation, and shall be arranged to prevent vibration transmission to the building.

B. Piping shall not be supported from equipment.

C. Support risers at each floor level independent of the floor sleeve.

2.6 VALVES

A. **Gate Valves**: Gate valves shall be **Crane, Lunkenheimer, Nibco-Scott,** or equal; with rising stem; outside screw and yoke type; iron body and bronze or brass trim; solid wedge bronze or brass disc and steel handwheel; flanged inlet and outlet for 2-1/2 inches and larger; threaded inlet and outlet for 2-inches and smaller; rated for 200 psig water working pressure; capability of being repacked while under pressure; and complete with pressure monitoring switch with SPDT normally closed contacts.

B. **Check Valves**: Check valves shall be horizontal swing check type as manufactured by **Crane**, or equal with non-shock design having iron body, bronze or brass trim, bronze or brass disc, flanged inlet and outlet, and shall be rated for minimum 300 psig water working pressure. Valves shall be listed by Underwriters' Laboratories (UL) and Factory Mutual Laboratories (FM).

C. **Angle Valves**: Angle valves shall be as manufactured by **Elkhart**, or equal and shall be 2-1/2 inch size, male to female, chrome-plated brass, and a 300 psig minimum working pressure.

D. **Automatic Ball Drip Valves**: Automatic ball drip valves shall be as manufactured by **Croker, Allenco**, or equal with cast brass body and 3/4-inch trade size pipe thread.

E. **Drain Valves**: Drain valves shall be bronze globe, 175 psi minimum water working pressure.

F. Any shutoff valves on system shall be supervised open by padlocking. Include tamper switches if required by local authorities. Wiring shall meet the requirements of Division 16 - Electrical.

2.7 FIRE RISER

A. **Riser Piping:** Riser piping shall be installed in accordance with NFPA 24: Private Fire Service Mains. Underground piping shall be PVC pipe as designated on the Civil Drawings. Exposed piping shall be as specified in Section 02565 - Ductile Iron Pipe. Provide restrained joints at buried fittings. The fire riser shall be installed with an inlet and outlet flexible connector with flanged ends as indicated on the Drawings.

B. **Isolation Valve:** Isolation valve shall be OS&Y gate valve, UL listed, and Factory Mutual approved for fire protection installation. Isolation valve shall be rated for normal system pressure but in no case less than 175 psi.

C. **Alarm Check Valve:** Alarm check valve shall be UL listed and Factory Mutual approved for fire protection installation and installation in the vertical or horizontal position. Alarm check valve shall be equipped with a removable cover assembly. Alarm check valve shall be equipped with pressure gauges upstream and downstream of the valve clapper. Alarm check valve shall be equipped with an external bypass to eliminate false water flow alarms. Alarm check valve trim piping to be externally galvanized and rated for a maximum water working pressure of 250 psi. Alarm check valve shall be Viking Corporation, Model J-1; Reliable Model E; or approved equal.

D. **Retarding Chamber:** Ported alarm connections on sprinkler riser valve to be piped to a retarding chamber to absorb variable pressure surges. Circuit closer to be installed on retarding chamber with proper venting capabilities to eliminate vapor or hydraulic lock against circuit closer. The retarding chamber shall be equipped with check valve and drain valve as indicated on the Drawings. Retarding chamber shall be Viking Corporation, Model C-1; or approved equal.

E. **Pressure Switch:** The retarding chamber shall be equipped with a pressure switch to activate when the wet pipe sprinkler system is activated. The pressure switch shall be compatible with system devices. Pressure switch enclosure shall be UL listed and Factory Mutual approved for fire protection application. Pressure switch shall have the ability to be wired for Class A or Class B service. Pressure switch shall be Viking, Model A-1; Potter, Model PS10, or approved equal.

F. **Flow Switch:** The fire riser shall be equipped with a vane-type flow switch to detect the movement of water. Vane-type flow switch shall be labeled as to the correct orientation of flow when mounted on system piping. The vane-type flow switch shall be equipped with an adjustable delay of audible alarm initiation from 0 seconds to 120 seconds. Vane-type flow switch to be Viking Model VSR-F; Potter, Model VSR-D; or approved equal.

G. **Motor Alarm:** Water flow shall activate a hydraulic powered motor alarm via impulse piping connected to the retarding chamber to minimize unnecessary alarms. The impulse piping shall be equipped with a strainer. The motor alarm shall be equipped with a rear closure plate to limit the access of foreign materials or accumulation of debris. The motor alarm shall be UL listed and Factory Mutual approved for fire protection application. Motor alarm shall be Viking Corporation, Model to be F-2/G-2; GEM Sprinkler Co, Model F630; or approved equal.

H. **Fire Department Riser Connection:** A fire department riser connection assembly, accessible for Fire Department uses and plumbed to the fire sprinkler riser downstream of the alarm check valve, shall be included. Fire Department riser connection shall be of a brass body with an integral clapper assembly to separate flow between inlets. Fire Department connection shall be UL listed and Factory Mutual approved for fire protection installation. Hose connection sizes and threads shall be compatible with the equipment used by Los Osos Fire Department. A swing check valve, that is UL listed and FM approved for fire protection use, shall be included as part of the assembly to maintain pressure of the sprinkler system.

I. **Drains:** System main drain and auxiliary drains shall be provided in accordance with NFPA 13. Auxiliary drain valves shall be installed when trapped water will be collected. A plugged or capped outlet shall not substitute for a drain valve. Drains piped through an exterior wall shall be piped in galvanized piping where it extends through the wall. The exterior drain shall terminate at a turned down galvanized 45-degree elbow and discharge to a splashblock provided by the CONTRACTOR.

PART 3 -- EXECUTION

3.1 INSTALLATION

A. Installation shall not commence until authority approvals are submitted to OWNER.

B. Piping

1. Installed piping, valves, and fittings shall meet or exceed the requirements of NFPA Standards 13 and 14 and any other state or local laws, codes, and ordinances having jurisdiction over these installations.

2. In areas with furred ceilings, run piping concealed above furred ceilings and in joists or beams to minimize obstructions. Expose only heads.

3. Provide cabinet, mounted on wall as directed by the ENGINEER in field, containing 12 extra sprinkler heads of each type and wrench suitable for each head type.

4. Provide inspector's test connection on each zone and system.

5. Pipes shall be cut off even and reamed full bore. Threads shall be cut smooth, true, and to standard size. Pipe shall be cleaned of chips, burrs, and oil. Thread compound shall be placed on male threads only, where threaded joints occur.

6. Welding shall be performed in accordance with the welding procedures of the National Certified Pipe Welding Bureau or any other approved procedures conforming to ASME Boiler/Pressure Vessel Code or ANSI Code for Pressure Piping requirements. No welder shall be employed on the WORK that has not been fully qualified under the above procedure and so certified by a local member of the National Certified Pipe Welding Bureau.

7. Wherever equipment is not clearly visible, or its function may require clarification, a lettered plate or decal (as applicable), shall be provided as directed by the ENGINEER. Letter size shall conform to code but not be less than 3/4-inch high.

C. Sleeves and Sealing

1. Provide sleeves for pipes passing through floors, walls, partitions, and any other building construction, of adequate diameter to allow minimum of 3/4-inch clearance around between sleeve and pipe.

2. Provide escutcheons at points where wall or floor are penetrated.

3. When pipe is insulated, insulation shall pass continuously through sleeve with 3/4-inch clearance between insulation and sleeve.

4. Provide required cutting and patching.

5. Wall sleeves shall be flush with face of wall unless otherwise indicated.

6. Sleeves shall permit free thermal expansion of pipe without binding or contact with structure.

7. Do not support pipes by resting pipe clamps on floor sleeves. Supplementary members shall be provided so pipes are floor supported.

D. **Sprinkler Head Guards**: Sprinkler heads that are less than 84-inches above finished floor or are so located as to be subject to injury, shall be protected with approved guards.

3.2 TESTING

A. **Standards**: Testing, final acceptance, certification, and approvals shall be in accordance with the requirements of the NFPA Standards No. 13 and 14 and as indicated herein. Where these requirements differ from NFPA standards, the most stringent requirements shall govern.

B. **Facilities**: The CONTRACTOR shall furnish labor, materials, test equipment, water, and electricity required to conduct the test. Furnish services of factory-trained fire protection engineer or specialist to supervise installation of sprinkler systems, conduct final field acceptance tests, and instruct OWNER's personnel.

C. **Scheduling**: Tests shall be scheduled to allow the ENGINEER, Fire Marshall, and insurance carrier to witness the test. The ENGINEER, Fire Marshall, and insurance carrier shall be notified a minimum of 48 hours prior to anticipated testing.

D. **Partial Testing**: As much as practical, systems shall be tested as complete systems. Tests on portions of a system may be allowed for proper progress scheduling. When systems are tested in segments, a separate and complete report shall be submitted for each segment. Segmented reports shall include a system diagram indicating portion of system tested.

E. **Concealed WORK**: Concealed WORK shall be tested by the CONTRACTOR and approved by the ENGINEER prior to covering.

F. **Tests**: The test source shall be isolated before conducting pressure tests. Each control valve shall be opened and closed while under pressure to assure proper operation. Piping system shall be capped and subjected to a minimum static water pressure of 200 psig and maintained for 2 hours with no leaks or loss of pressure. Leaking joints shall be completely disassembled and rebuilt using new materials.

G. **Retests**: Portions of the system that fail the tests shall be retested and approved by the ENGINEER after corrective measures have been taken.

3.3 FLUSHING AND STERILIZATION

A. The CONTRACTOR shall provide necessary temporary connections, valves, oversized flushing connections, pumps, and water as required to properly clean and sterilize the system.

B. Protect equipment and materials at all times. Close pipe openings with caps or plugs during installation. Cover and protect equipment and materials from dirt, water, chemicals, and mechanical damage.

C. Prior to testing, flush the piping system with clean water until free of scale, slag, dirt, grease, or other foreign material in accordance with requirements of NFPA Standards No. 13 and 14. Clean and prepare exterior of pipe prior to painting.

D. Upon completion of the installation, sterilize each system, including the underground supply connection, by chlorination before the system is placed in operation. The amount of chlorine applied shall be such as to provide a dosage of not less than 50 parts per million. Following a contact period of not less than 8 hours, flush the chlorinated water from the system with clean water until the residual chlorine is not greater than 0.4 parts per million. Valves in water lines being sterilized shall be opened and closed a minimum of 3 times during the 8 hour period.

3.4 START-UP

A. Fire protection engineer shall supervise start-up and adjustment of controls.

3.5 TRAINING

A. Train OWNER's personnel after testing has been completed successfully and approval has been obtained from authorities.

B. Classroom training shall include equipment overview, review of O&M manual, and showing of visual aids. "Hands-on" training shall be held at the Site and shall be conducted for a minimum duration of 4 hours excluding travel time.

- END OF SECTION -

SECTION 15152 - FM-200 FIRE SUPPRESSION SYSTEM

PART 1 -- GENERAL

1.1 THE REQUIREMENT

A. The CONTRACTOR shall design, furnish, and install the FM-200 fire suppression system with smoke detection, fire alarm systems, and controls as specified herein to serve the Control Room and Communication Room of the Operations Building at the Wastewater Treatment Facility.

1.2 QUALITY ASSURANCE

A. **Codes and Standards**

1. All installations shall meet or exceed the requirements of NFPA and all other federal, state and local codes and ordinances having jurisdiction over the Project.

B. **Reference Standards**

1. National Fire Protection Association (NFPA):

a. NFPA 2002 "Clean Agent Fire Extinguishing Systems."

b. NFPA 72E "Fire Detection System."

c. NFPA 72A, B, and C "Fire Detection, Alarm, and Releasing Circuits."

d. NFPA 70 "Wiring and Electrical Equipment."

2. American National Standard Institute (ANSI):

a. 331.1 Pipe and Fittings

b. Bl.20.1 Pipe Threads.

1.3 APPROVALS

A. Fire protection equipment and installation shall be approved by the local Fire Marshal.

B. The fire suppression system design and equipment shall be listed by UL, approved by Factory Mutual, and comply with NFPA 2002 standards.

1.4 SUBMITTALS

A. Descriptive literature for materials specified.

B. Shop Drawings that locate and detail piping, supports, nozzles, valves, tanks, and miscellaneous items.

C. Certification and approval of Fire Marshall.

D. Record drawings, specifications, and calculations.

E. Test reports that accurately record and report the methods of testing, times, and dates of the test, witnesses to the test, and the results of the test. The test reports shall be neatly typewritten on standard 8-1/2 by 11 inch sheets and shall be submitted for acceptance within five working days after the test has been performed.

PART 2 -- PRODUCTS

2.1 GENERAL

A. All fire suppression system piping, fittings, specialties, equipment, and appurtenances shall be new, first-quality products manufactured for the intended usage. Materials, capacities, features, finishes, and manufacturers shall be as specified herein and shall be compatible with elements of the work to which they relate or connect.

2.2 THE AGENT

A. The agent shall be FM-200, HFC-227ea-Heptafluoropane (CF_3 $CHFCF_3$).

B. FM-200 shall be a gas that is clean, dry, non-corrosive, non-damaging, and non-deteriorating and meets the requirements of NFPA 2002.

C. FM-200 shall be suitable for use in normally occupied spaces.

D. The system shall be sized to deliver a minimum FM-200 concentration of 7 percent, by volume at 70 degrees F, in the protected space, in a maximum of 10 seconds. The distribution piping shall be designed for uniform dispersion of the FM-200 clean agent.

E. FM-200 shall be stored in a container pressurized with nitrogen to a maximum working pressure of 360 psia at 70 degrees F. Higher pressure agents shall be unacceptable.

F. FM-200 shall have the following characteristics:

1. Ozone Depletion Potential of Zero (0).

2. Atmospheric Lifetime less than 50 years.

3. LC_{50}> 800,000 ppm.

G. EPA accepted.

2.3 DETECTORS

A. The detectors shall be wired in the "Verified Detection" concept. The first detection zone shall signal an alarm and the second zone shall indicate a pre-discharge condition and that the FM-200 discharge is imminent.

B. Maximum spacing shall be 250 square feet per detector. Spacing shall be reduced in high air velocity air flow conditions.

C. All wiring shall be installed in accordance with NFPA Standards 70, 71, 72A, 72B, 72C, 72D, 72E and 74 and the National Electric Code No. 760, current edition.

2.4 CONTROL SYSTEM

A. The control panel shall include standby batteries capable of operating the system under maximum normal load for 24 hours and then be capable of operating the system for five minutes continuously during an alarm condition. The control panel shall give a trouble signal when any supervised circuit malfunctions or the releasing circuit is aborted. An LED shall be provided to indicate the location of any alarmed detector mounted below the floor. The control panels shall interface with the fire alarm panel. A FM-200 pre-alarm and alarm system shall be indicated on the fire alarm panel and provide dry relay contacts in the fire alarm panel for computer monitoring.

2.5 SUPERVISION

A. Supervision of automatic systems shall be provided and shall include electrical supervision of the actuating device and the wiring connecting the actuating device and the detection circuit. All alarms and pre-alarm circuits shall be supervised. All wiring shall be installed in accordance with NFPA Standards 70, 71, 72A, 72B, 72C, 72D, 72E, and 74, and the NEC No. 760, current edition.

2.6 ALARM

A. The alarm condition shall activate a bell. The alarm condition shall provide contacts as required for the following functions:

1. Shutdowns of electrical equipment such as air conditioning units and its condensing unit.

2. Release of door holders and dampers.

3. Indicate an alarm condition on the fire alarm panel and provide a dry contact signal for computer monitoring.

4. Other functions as specified in the Contract Documents.

2.7 PRE-DISCHARGE ALARM

A. The Pre-Discharge Alarm condition shall activate a horn, or horn/strobe device located in the area with a minimum sound of 90 dB. The Pre-Discharge Alarm condition shall also provide contacts to signal a general alarm and a remote alarm and/or provide auxiliary functions.

2.8 DISCHARGE ALARM

A. The Discharge Alarm shall activate a strobe light (minimum 15 CD) located over each entrance/exit to the protected space. The Discharge Alarm shall also provide contacts to sound a general alarm and a remote alarm.

2.9 MANUAL STATIONS

A. Dual manual discharge stations shall be provided at exits. Actuation of the manual stations shall put the control panel in the discharge alarm condition, and provide all functions as noted in 2.6, 2.7 and 2.8 above. The manual station shall override the abort switch.

2.10 RELEASING MODULE

A. A releasing module located in the control panel shall provide the following:

1. A supervised circuit to the FM-200 supply agent release module located at each agent storage container.

2. An adjustable 0 to 60 second time delay in the FM-200 actuation circuit.

3. A manual abort of the FM-200 actuation circuit causing a trouble signal upon activation.

4. A discharge signal to the FM-200 supply after completion of the field programmed time delay or operation of a manual station.

2.11 ABORT SWITCHES

A. Two remote abort switches shall be provided. Each switch shall be of the "Dead Man" normally closed type. The switch shall be located in a separate, supervised circuit. Actuation (opening) of the switch shall require a continuous manual operation causing an interruption of the supervised detection circuit and the control panel sounding a trouble signal.

2.12 CONTAINER/TANKS

A. The agent storage container(s) shall include mounting bracket, installation template, agent release module, and shall be modular in design.

B. The container shall be equipped with a pressure gauge to visually display internal pressure. The gauge shall be color coded for fast reference of pressure readings and supplied as an integral part of the container.

C. Valve shall accommodate a "straight through" vertical discharge with no directional changes for maximum discharge efficiency and safety. The releasing valve shall contain a "fast-acting" scored, non-fragmenting rupture membrane, which will burst when the pyrotechnic initiator is activated via an electric signal from the control panel.

D. The container and valve shall be capable of releasing the agent as fast as possible and shall in no case exceed ten (10) seconds.

E. Containers with solenoid actuated releasing mechanisms shall not be acceptable.

F. Container charging pressure shall be a maximum of 360 psia at 70 degrees F.

G. A nameplate indicating the manufacturer's name and part number, agent fill weight, and total charged weight shall be permanently bonded to each container.

2.13 ACTUATOR

A. Release of the agent shall be accomplished by an electrical signal from the control panel.

B. The FM-200 clean agent fire suppression system shall be discharged through the operation of an initiator that releases the agent through a burst disc valve.

2.14 LOW PRESSURE SWITCH

A. The agent storage container shall be equipped with a low pressure switch to indicate a loss of container pressure. A decrease in pressure from 360 psia to 275/272 psia will cause the normally closed contact to open, thereby indicating a trouble condition at the control panel.

B. Low Pressure Switch shall be monitored by the control panel and shall provide a specific indication of cylinder low pressure.

2.15 LIQUID LEVEL INDICATORS

A. All agent storage container(s) with 100 pounds of agent or more shall be equipped with a liquid level indicator to accurately determine the amount of agent in the container at any time.

2.16 DISCHARGE NOZZLES

A. The nozzles used to discharge the agent shall be such that an even distribution of agent occurs. The nozzles shall be available in two types, 180 and 360 degree discharge patterns.

B. The nozzles shall be available in 3/8 inch, 1/2 inch, 3/4 inch, 1" inch, 1-1/4 inch 1-1/2 inch, and 2 inch sizes.

C. The nozzle shall be equipped with set screws for the mounting of an optional deflector plate (if required).

D. The nozzles shall be provided with pipe threads that correspond to the nozzle sizes.

2.17 WARNING SIGNS

A. Warning signs shall be designed and installed as necessary to advise occupants that the room is protected by an automatic FM-200 system and that upon alarm all occupants shall evacuate the room.

B. All manual stations shall have warning signs to advise that actuation will cause the discharge of FM-200 and an alarm signal.

2.18 DISTRIBUTION PIPING

A. Piping and piping joints shall be in accordance with NFPA 2002.

B. All piping shall be steel pipe conforming to ASTM A53, or A106 Schedule 40, black.

C. All fittings shall be malleable iron fittings conforming to ASTM A-197, 300 lb., screwed or flange type.

D. Ordinary cast iron pipe and fittings, steel pipe conforming to ASTM A-120, or non-metallic pipe shall not be used.

2.19 MANUFACTURERS OR EQUAL

A. The FM-200 fire extinguishing system shall be as manufactured by:

1. **Fike Protection Systems;**

2. **Fenwal-Kidde;**

3. **Chemtron.**

PART 3 -- EXECUTION

3.1 INSTALLATION

A. **Piping:**

1. Piping shall be installed in accordance with NFPA 2002 Clean Agent Fire Extinguishing Systems.

2. Piping shall be routed in orderly manner, plumb and parallel to building structure.

3. Piping shall be installed to conserve building space, and not interfere with use of space and other work.

4. Piping shall be installed to allow for expansion and contraction without stressing pipe, joints, or connected equipment.

5. Sleeves shall be provided when penetrating walls and floors. Seal pipe and sleeve penetrations shall be sealed airtight.

6. The installation shall be acceptable to the authority having jurisdiction.

B. **Agent Storage Containers:**

1. Each container shall have a nameplate with an identifying part number. The part numbers should be checked against the parts listed on the system plans to verify that the correct equipment was received.

2. Containers should be located according to system plans in clean, dry, and relatively vibration free areas. Containers should never be mounted in any area in which the container could potentially be submerged in a liquid.

3. Container brackets should be mounted securely to rigid surfaces that will support the container load. Provide bracketing as required.

C. **Discharge Piping Connections:**

1. The discharge piping shall be connected directly to the container valve through the use of standard pipe and fittings.

2. Piping materials shall conform to those specified. All threaded joints shall be sealed by using Teflon tape "**ONLY**" on male pipe threads. All pipe and fittings shall be reamed, blown clear, and swabbed with solvent to remove dirt, rust, and cutting oils before assembly. Effective solvents such as trichlorethane, perchlorethane or acetone may be used. Caution must be used when utilizing these solvents. All piping shall be rigidly supported by UL Listed, FM approved pipe hangers.

D. **Installing Main Discharge Piping:**

1. All piping and fittings shall be blown clear and swabbed with a cleaning solvent such as acetone, trichlorethane, etc. prior to installation. Teflon tape shall be used to seal all threaded joints.

2. All piping shall be rigidly supported by a combination network comprised of pipe hangers and rigid support brackets. Pipe hangers shall be used to support the "dead load" of the pipe system.

3. Rigid pipe supports shall be installed to support the "live load" of the pipe system during discharge. Rigid bracing shall be required at each directional change fitting, tee and nozzle. All drops to 180° nozzles shall be back-braced in the opposite direction of the discharge.

4. All system piping shall be run in strict accordance to system drawings. If piping changes are necessary, they shall be approved by ENGINEER and indicated on the "as-built" drawings.

E. **Nozzle Installation:**

1. Nozzle locations shall be within at least one foot of the location(s) shown on system drawings.

2. Before nozzles are installed, the piping shall be blown clear to remove chips or other debris.

3. Coordinate the nozzle identifying number, stamped on the end of the nozzle, with the nozzle part number(s) listed on the system drawings.

3.2 TESTING

A. **Piping System:**

1. The test entire system shall be pressured tested in accordance with NFPA 2002.

2. Test shall be witnessed by Fire Marshal, authority having jurisdiction, OWNER's insurance underwriter, and ENGINEER.

3.3 START-UP

A. Competent personnel shall supervise start-up and adjustment of controls. After installation has been completed and approved by proper authority, a qualified manufacturer's representative shall train maintenance personnel in the operation and maintenance of the system.

- END OF SECTION -

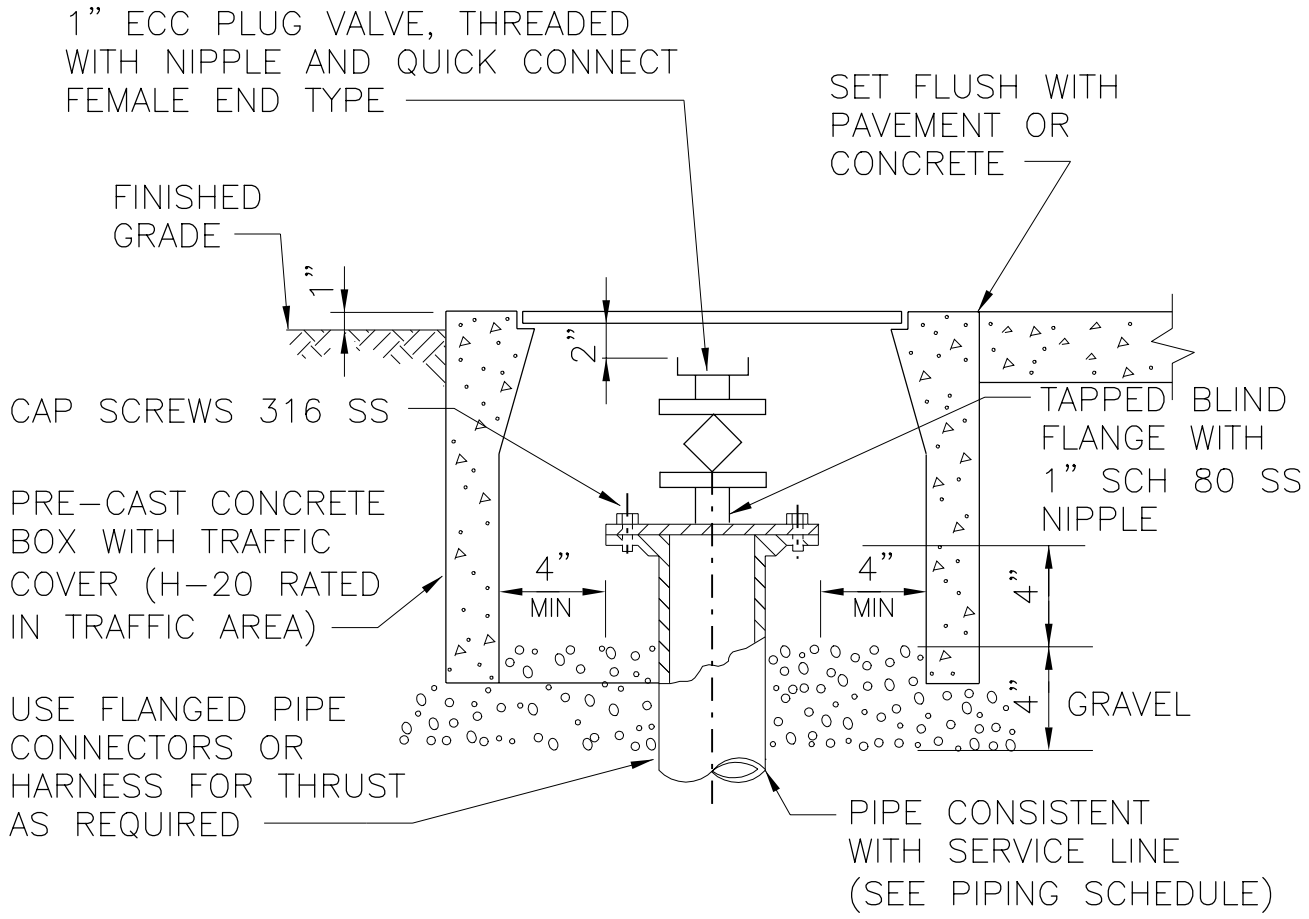

PRESSURIZED SYSTEM CLEANOUT TO GRADE (PCOTG) NOT TO SCALE

C-305

User: $$$$username$$$$ Plot Date: 20-JAN-2005
File: \\uswck1s02\nwdd\projects\los_osos\wwtp\Addenda\Addendum_No_5\civ\PRESSURIZED_CLEANOUT.dgn
Job No: 0000000

MWH
Walnut Creek
California

LOS OSOS WASTEWATER PROJECT

DETAIL C-305

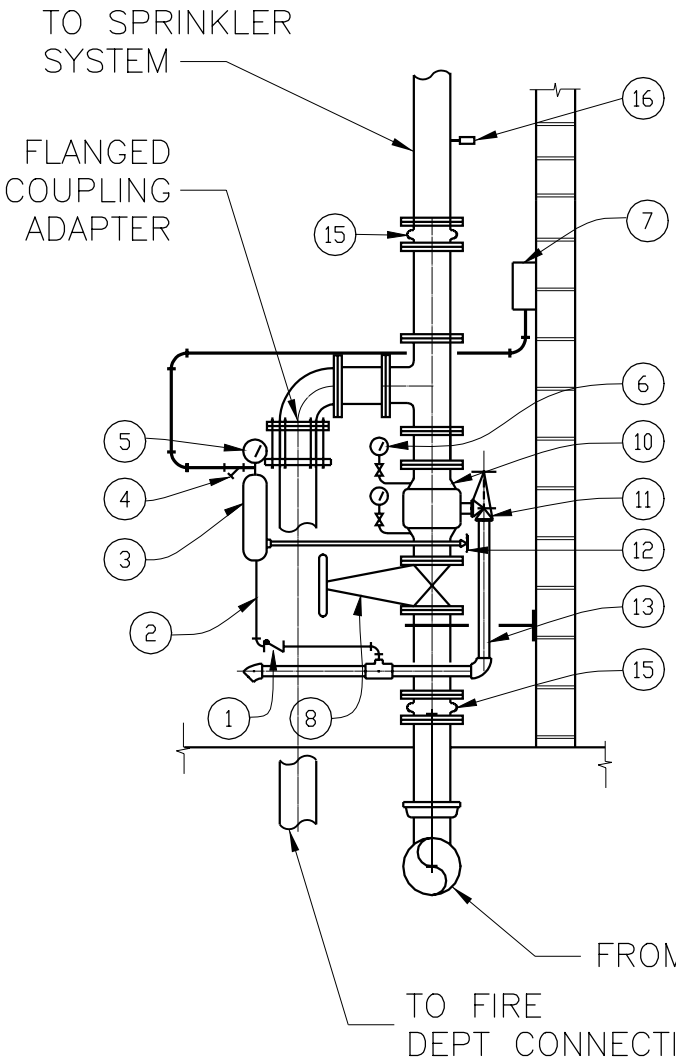

ITEM	DESCRIPTION
1	RETARDING CHAMBER CHECK VALVE
2	RETARDING CHAMBER DRAIN
3	RETARDING CHAMBER
4	ALARM LINE STRAINER
5	PRESSURE SWITCH
6	PRESSURE GAUGE (2 REQUIRED)
7	MOTOR ALARM
8	ISOLATION VALVE (O.S.&Y.)
9	NOT USED
10	ALARM CHECK VALVE
11	MAIN DRAIN VALVE
12	ALARM TEST VALVE
13	MAIN DRAIN
14	NOT USED
15	FLEXIBLE CONNECTORS
16	FLOW SWITCH

FIRE DEPARTMENT RISER CONNECTION

M-921

NOT TO SCALE

User: $$$$username$$$$ Plot Date: 20-JAN-2005
File: \\uswck1s02\nwdd\projects\los_osos\wwtp\Addenda\Addendum_No_5\mec\FIRE_RISER.dgn
Job No: 0000000

MWH
Walnut Creek
California

LOS OSOS WASTEWATER PROJECT

DETAIL M-921