Los Osos Community Services District
Los Osos, California

Volume IV – Drawings for the Construction of

Los Osos Wastewater Project
Area B and Area C

February 2004

REVIEWED BY LOS OSOS COMMUNITY SERVICES DISTRICT DATE

REVIEWED BY COUNTY OF SLO DATE

MWH

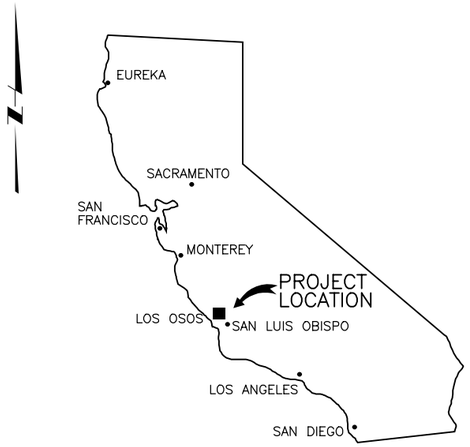

LOCATION MAP

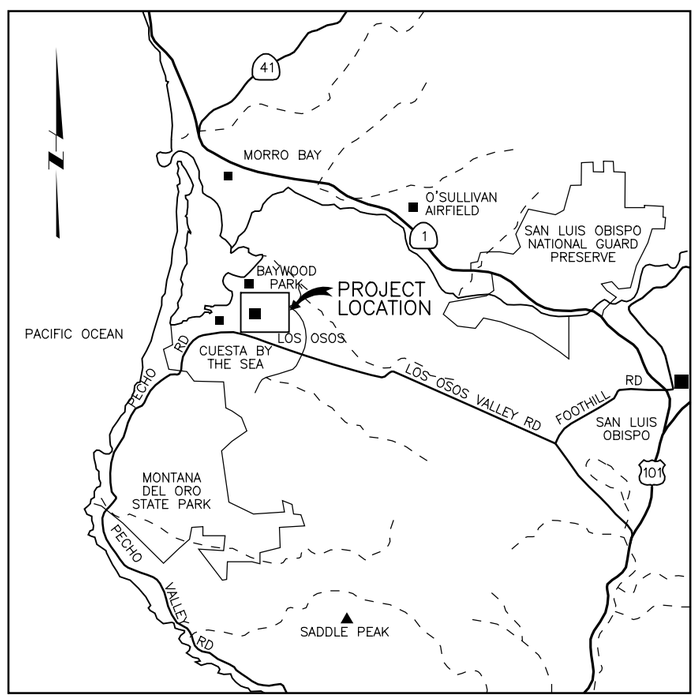

VICINITY MAP

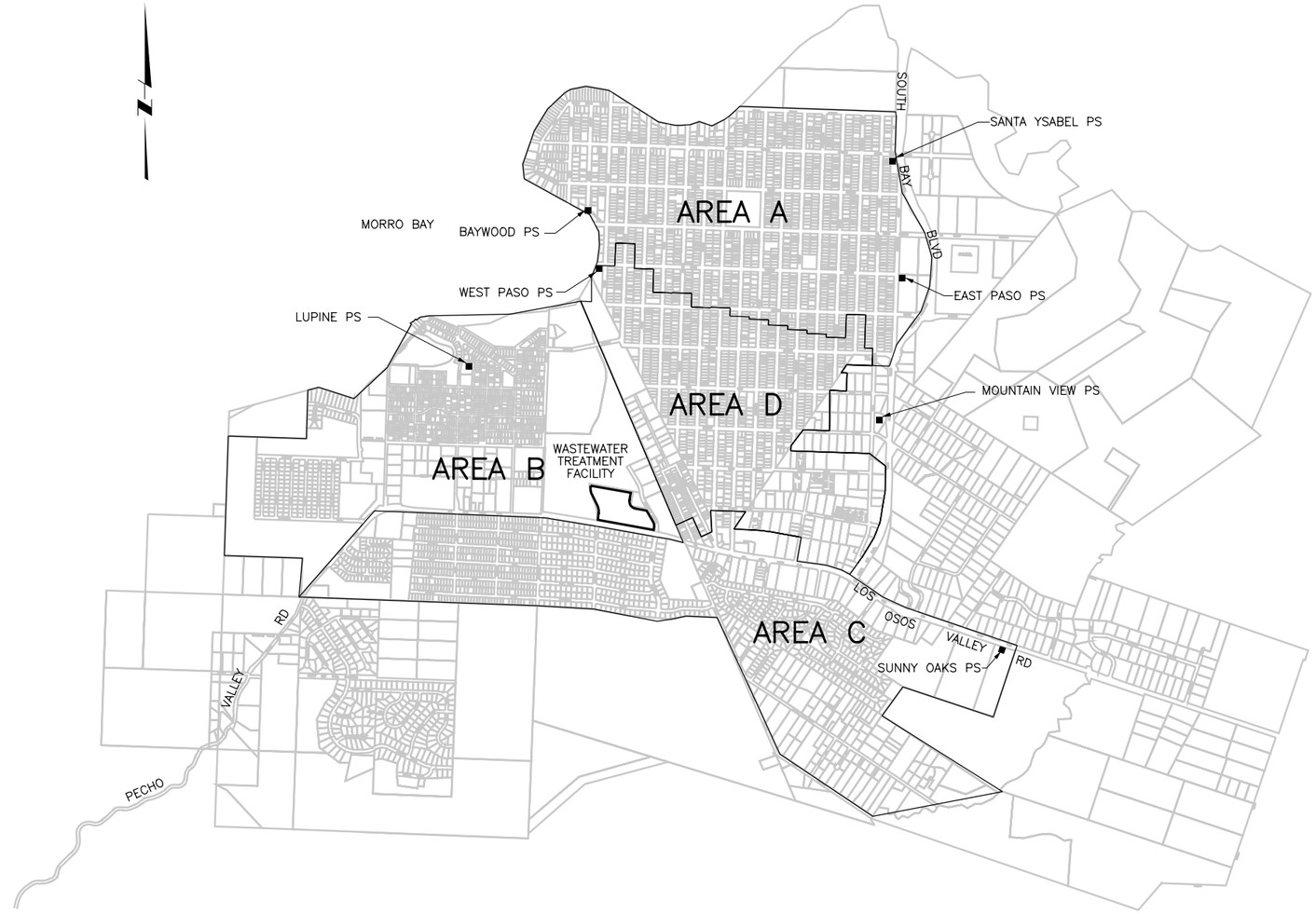

SITE PLAN

REGISTERED PROFESSIONAL ENGINEER
JOHN ARTHUR BERGEN
NO. C31069
Exp. 3-31-04
CIVIL
STATE OF CALIFORNIA

REV	DATE	BY	DESCRIPTION

SCALE: NO SCALE

WARNING: 0 1/2 1 — IF THIS BAR DOES NOT MEASURE 1" THEN DRAWING IS NOT TO SCALE

DESIGNED L. WONG
DRAWN E. WISNIEWSKI
CHECKED J. BERGEN

SUBMITTED BY
JOHN A. BERGEN — C31069 LICENSE NO. — 2/16/2004 DATE
STEVE J. HYLAND — C23892 LICENSE NO. — 2/16/2004 DATE

DIGALERT — DIAL TOLL FREE 1-800-642-2444 AT LEAST TWO DAYS BEFORE YOU DIG — UNDERGROUND SERVICE ALERT OF NORTHERN CALIFORNIA

LOS OSOS COMMUNITY SERVICES DISTRICT

MWH Walnut Creek, California

LOS OSOS WASTEWATER PROJECT
GENERAL

LOCATION MAP, VICINITY MAP, AND SITE PLAN

SHEET BC-G-002

Job No: 1481166 File: N:\Projects\los_osos\Collect_Sys\BC\gen\BC-G-002.dgn Plot Date: 09-FEB-2004 14:34

LIST OF DRAWINGS

GENERAL

BC–G–001	COVER SHEET
BC–G–002	LOCATION MAP, VICINITY MAP, AND SITE PLAN
BC–G–003	LIST OF DRAWINGS
BC–G–004	SURVEY DATA, POTHOLE DATA, AGENCY CONTACT INFORMATION
BC–G–005	AREA B KEY PLAN
BC–G–006	AREA C KEY PLAN 1
BC–G–006A	AREA C KEY PLAN 2
BC–G–006B	AREA C KEY PLAN 3
BC–G–007	EDS – OVERALL KEY PLAN
BC–G–008	RIPARIAN AND WETLANDS LOCATIONS
BC–G–009	COASTAL SAGE SCRUB AND OTHER SENSITIVE AREAS
BC–G–010	GENERAL NOTES
BC–G–011	PIPING SCHEDULE
BC–G–012	SYMBOLS
BC–G–013	ABBREVIATIONS

TRAFFIC CONTROL

BC–TC–01	GENERAL NOTES, LEGEND AND ABBREVIATIONS
BC–TC–02	KEY PLAN
BC–TC–03	LOS OSOS VALLEY ROAD 1
BC–TC–04	LOS OSOS VALLEY ROAD 2
BC–TC–05	LOS OSOS VALLEY ROAD 3
BC–TC–06	LOS OSOS VALLEY ROAD 4
BC–TC–07	LOS OSOS VALLEY ROAD 5 TYPICAL MID-BLOCK CONSTRUCTION
BC–TC–08	LOS OSOS VALLEY ROAD 6 TYPICAL SS LATERAL CONSRUCTION
BC–TC–T01A	TEMPORARY CRASH CUSHION - SAND FILLED
BC–TC–T01B	TEMPORARY CRASH CUSHION - SAND FILLED (BIDIRECTIONAL)
BC–TC–T02	TEMPORARY CRASH CUSHION - SAND FILLED (SHOULDER INSTALLATIONS)
BC–TC–T03	TEMPORARY RAILING (TYPE K)
BC–TC–T04	TEMPORARY TRAFFIC SCREEN
BC–TC–T05	TEMPORARY TERMINAL SECTION (TYPE K)
BC–TC–T10	LANE CLOSURE ON FREEWAYS AND EXPRESSWAYS
BC–TC–T10A	LANE AND COMPLETE CLOSURES ON FREEWAYS AND EXPRESSWAYS
BC–TC–T11	LANE CLOSURE ON MULTILANE CONVENTIONAL HIGHWAYS 1
BC–TC–T12	LAND CLOSURE ON MULTILANE CONVENTIONAL HIGHWAYS 2
BC–TC–T13	LANE CLOSURE ON TWO LANE CONVENTIONAL HIGHWAYS
BC–TC–T14	RAMP CLOSURE
BC–TC–T15	MOVING LANE CLOSURE ON MULTILANE HIGHWAYS 1
BC–TC–T16	MOVING LANE CLOSURE ON MULTILANE HIGHWAYS 2
BC–TC–T17	MOVING LANE CLOSURE ON TWO LANE HIGHWAYS

CIVIL

GENERAL CIVIL

BC–GC–060	STANDARD CIVIL DETAILS – 1
BC–GC–061	STANDARD CIVIL DETAILS – 2
BC–GC–062	STANDARD CIVIL DETAILS – 3
BC–GC–063	STANDARD CIVIL DETAILS – 4
BC–GC–064	STANDARD CIVIL DETAILS – 5
BC–GC–065	STANDARD CIVIL DETAILS – 6
BC–GC–066	SAN LUIS OBISPO COUNTY STANDARD CIVIL DETAILS – 1
BC–GC–067	SAN LUIS OBISPO COUNTY STANDARD CIVIL DETAILS – 2
BC–GC–068	EROSION CONTROL DETAILS

COLLECTION SYSTEM – AREA B

B–PP–100	PLAN AND PROFILE: PALISADES AVE.	STA. 7+69.71	TO 10+73.00
B–PP–101	PLAN AND PROFILE: LUPINE STREET	STA. 0+95.31	TO 2+76.05
B–PP–102	PLAN AND PROFILE: DORIS AVENUE	STA. 22+17.04	TO 26+58.75
B–PP–103	PLAN AND PROFILE: BINSCARTH RD.	STA. 10+62.44	TO 12+94.02
B–PP–104	PLAN AND PROFILE: BINSCARTH RD.	STA. 1+06.06	TO 10+62.44
B–PP–105	PLAN AND PROFILE: PECHO ROAD	STA. 14+74.47	TO 22+14.71
B–PP–106	PLAN AND PROFILE: PECHO ROAD	STA. 6+73.52	TO 14+74.47
B–PP–107	PLAN AND PROFILE: LUPINE STREET	STA. 2+76.05	TO 5+31.74
B–PP–108	PLAN AND PROFILE: BAY STREET	STA. 1+05.94	TO 6+62.19
B–PP–109	PLAN AND PROFILE: RAMONA AVE.	STA. 0+94.00	TO 7+50.00
B–PP–110	PLAN AND PROFILE: DONNA AVENUE	STA. 12+00.00	TO 15+13.17
B–PP–111	PLAN AND PROFILE: FEARN AVENUE	STA. 11+20.00	TO 15+67.55
B–PP–112	PLAN AND PROFILE: MITCHELL DRIVE	STA. 8+60.56	TO 17+60.00
B–PP–113	PLAN AND PROFILE: DON AVENUE	STA. 6+66.83	TO 9+41.72
B–PP–114	PLAN AND PROFILE: MITCHELL DRIVE	STA. 0+94.02	TO 5+59.98
B–PP–115	PLAN AND PROFILE: PINE AVENUE	STA. 18+47.22	TO 23+08.37
B–PP–116	PLAN AND PROFILE: VINE STREET	STA. 0+94.00	TO 5+80.00
B–PP–117	PLAN AND PROFILE: BRODERSON AVE.	STA. 23+09.12	TO 25+34.98
B–PP–118	PLAN AND PROFILE: DORIS AVENUE	STA. 26+58.75	TO 30+35.24
B–PP–119	PLAN AND PROFILE: MITCHELL DRIVE WEST MITCHELL	STA. 0+95.63	TO 7+53.22
		STA. 1+28.00	TO 3+04.38
B–PP–120	PLAN AND PROFILE: BINSCARTH RD.	STA. 12+94.02	TO 22+53.33
B–PP–121	PLAN AND PROFILE: PINE AVENUE	STA. 9+02.35	TO 16+33.96
B–PP–122	PLAN AND PROFILE: ASH STREET	STA. 5+74.44	TO 10+77.53
B–PP–123	PLAN AND PROFILE: BRODERSON AVE.	STA. 6+57.03	TO 9+02.14
B–PP–124	PLAN AND PROFILE: SKYLINE DRIVE	STA. 30+10.00	TO 32+22.95
B–PP–125	PLAN AND PROFILE: DONNA AVENUE	STA. 1+42.47	TO 10+73.32
B–PP–126	PLAN AND PROFILE: HENRIETTA AVE.	STA. 14+45.00	TO 15+95.82
B–PP–127	PLAN AND PROFILE: HENRIETTA AVE.	STA. 15+95.82	TO 17+42.02
B–PP–128	PLAN AND PROFILE: FEARN AVENUE	STA. 1+06.00	TO 10+70.99
B–PP–129	PLAN AND PROFILE: HENRIETTA AVE.	STA. 18+23.77	TO 22+28.16
B–PP–130	PLAN AND PROFILE: ASH STREET	STA. 0+94.19	TO 3+10.00
B–PP–131	PLAN AND PROFILE: SKYLINE DRIVE	STA. 22+41.23	TO 24+65.00
B–PP–132	PLAN AND PROFILE: DON AVENUE	STA. 1+37.48	TO 5+85.95
B–PP–133	PLAN AND PROFILE: BINSCARTH ROAD	STA. 22+53.33	TO 27+21.52
B–PP–134	PLAN AND PROFILE: LOMA STREET	STA. 0+94.76	TO 5+62.53
B–PP–135	PLAN AND PROFILE: HENRIETTA AVENUE	STA. 23+04.01	TO 27+73.58
B–PP–136	PLAN AND PROFILE: PINE AVENUE	STA. 6+59.30	TO 9+02.35
B–PP–137	PLAN AND PROFILE: ASH STREET	STA. 3+55.00	TO 5+74.44
B–PP–138	PLAN AND PROFILE: SKYLINE DRIVE	STA. 25+55.17	TO 27+21.37
B–PP–139	PLAN AND PROFILE: SKYLINE DRIVE	STA. 27+21.37	TO 29+20.18
B–PP–140	PLAN AND PROFILE: DORIS AVENUE	STA. 12+90.38	TO 22+17.04
B–PP–141	PLAN AND PROFILE: GARDEN STREET	STA. 0+74.53	TO 5+10.00
B–PP–142	PLAN AND PROFILE: NANCY AVENUE	STA. 10+68.94	TO 13+08.95
B–PP–143	PLAN AND PROFILE: HENRIETTA AVENUE	STA. 10+95.10	TO 12+72.15
B–PP–144	PLAN AND PROFILE: SUNNY HILL RD.	STA. 0+92.97	TO 5+00.61
B–PP–145	PLAN AND PROFILE: HENRIETTA AVE.	STA. 6+69.99	TO 8+45.94
B–PP–146	PLAN AND PROFILE: MAPLE AVENUE	STA. 1+03.90	TO 4+94.15
B–PP–147	PLAN AND PROFILE: HENRIETTA AVE.	STA. 8+31.05	TO 9+60.05
B–PP–148	PLAN AND PROFILE: NANCY AVENUE	STA. 1+34.63	TO 10+68.94
B–PP–149	PLAN AND PROFILE: NORTH COURT ST.	STA. 1+00.10	TO 7+31.34
B–PP–150	PLAN AND PROFILE: SOUTH COURT ST.	STA. 0+99.98	TO 7+63.35
B–PP–151	PLAN AND PROFILE: GROVE STREET	STA. 1+05.97	TO 5+30.00
B–PP–152	PLAN AND PROFILE: HENRIETTA AVE.	STA. 1+05.93	TO 5+07.24
B–PP–153	PLAN AND PROFILE: ASPEN STREET	STA. 1+60.00	TO 5+75.08
B–PP–154	PLAN AND PROFILE: SOLANO STREET	STA. 1+00.00	TO 6+01.49
B–PP–155	PLAN AND PROFILE: SOLANO STREET	STA. 1+06.94	TO 7+82.65
B–PP–156	PLAN AND PROFILE: HOWARD AVENUE	STA. 9+49.07	TO 18+75.78
B–PP–157	PLAN AND PROFILE: HOWARD AVENUE	STA. 2+18.55	TO 7+05.60
B–PP–158	PLAN AND PROFILE: NEVADA COURT	STA. 0+92.68	TO 3+56.83
B–PP–159	PLAN AND PROFILE: BUTTE DRIVE	STA. 1+42.46	TO 10+44.53
B–PP–160	PLAN AND PROFILE: INYO STREET	STA. 0+85.80	TO 11+46.17
B–PP–161	PLAN AND PROFILE: HUMBOLT STREET	STA. 1+60.00	TO 11+46.24
B–PP–162	PLAN AND PROFILE: GLENN STREET	STA. 1+60.02	TO 11+46.24
B–PP–163	PLAN AND PROFILE: FRESNO STREET	STA. 1+60.00	TO 11+46.20
B–PP–164	PLAN AND PROFILE: EL DORADO ST.	STA. 1+60.00	TO 11+46.19
B–PP–165	PLAN AND PROFILE: DEL NORTE ST.	STA. 1+60.00	TO 11+46.16
B–PP–166	PLAN AND PROFILE: ROSINA DRIVE	STA. 1+16.38	TO 8+00.00
B–PP–167	PLAN AND PROFILE: DONNA AVENUE	STA. 10+68.32	TO 14+60.32
B–PP–168	PLAN AND PROFILE: BINSCARTH ROAD	STA. 15+41.00	TO 22+58.00
B–PP–169	PLAN AND PROFILE: PINE AVENUE	STA. 6+62.80	TO 16+28.95
B–PP–170	PLAN AND PROFILE: SKYLINE DRIVE	STA. 27+26.58	TO 32+12.75
B–PP–171	PLAN AND PROFILE: LUPINE F.M.	STA. 1+00.00	TO 9+55.44
B–PP–172	PLAN AND PROFILE: RAVENNA AVE.	STA. 20+00.00	TO 27+82.84
B–PP–173	PLAN AND PROFILE: RAVENNA AVE.	STA. 11+00.00	TO 20+00.00
B–PP–174	PLAN AND PROFILE: RAVENNA AVE.	STA. 1+00.00	TO 11+00.00
B–PP–175	PLAN AND PROFILE: PALISADES AVE.	STA. 1+00.00	TO 6+94.41

PUMP STATION AND WELLS – AREA B

B–C–200	AREA B KEY PLAN
B–C–201	LUPINE PS AND STANDBY POWER SITE PLAN
B–C–202	LOMA HARVEST WELL SITE PLAN
B–C–203	PALISADES HARVEST WELL SITE PLAN
B–C–204	EROSION CONTROL PLAN

EFFLUENT DISPOSAL SYSTEM – AREA B

ED–C–330	BRODERSON EDS PLANS
ED–C–331	BRODERSON EDS SITE GRADING PLANS
ED–C–332	BRODERSON EDS SECTIONS
ED–C–333	BRODERSON EDS GRAVEL ROAD PROFILE
ED–C–334	EDS SCHEMATIC DIAGRAM
ED–C–337	EDS SECTIONS AND DETAILS - 1
ED–C–338	EDS SECTIONS AND DETAILS - 2
ED–C–339	EDS SECTIONS AND DETAILS - 3

B–PP–330	PLAN AND PROFILE: BRODERSON EDS SITE	STA. 1+00	TO 10+00
B–PP–331	PLAN AND PROFILE: BRODERSON AVE.	STA. 10+00	TO 6+50
B–PP–332	PLAN AND PROFILE: BRODERSON AVE.	STA. 6+50	TO 17+00
B–PP–333	PLAN AND PROFILE: BRODERSON AVE.	STA. 16+00	TO 7+00
B–PP–334	PLAN AND PROFILE: BRODERSON AVE.	STA. 7+00	TO 19+00
B–PP–335	PLAN AND PROFILE: MITCHELL DRIVE	STA. 17+00	TO 6+00
B–PP–336	PLAN AND PROFILE: RAVENA AVENUE	STA. 7+00	TO 15+00
B–PP–337	PLAN AND PROFILE: RAVENA AVENUE	STA. 15+00	TO 23+00
B–PP–338	PLAN AND PROFILE: RAVENA AVENUE	STA. 0+00	TO 9+89.35
B–PP–342	PLAN AND PROFILE: SKYLINE STREET	STA. 1+00	TO 6+00
B–PP–343	PLAN AND PROFILE: PECHO ROAD	STA. 6+50	TO 13+00
B–PP–344	PLAN AND PROFILE: ROSINA DRIVE	STA. 1+00	TO 12+50
B–PP–345	PLAN AND PROFILE: ROSINA DRIVE	STA. 12+50	TO 24+50
B–PP–346	PLAN AND PROFILE: ROSINA DRIVE AND "ROSINA 1"	STA. 23+50	TO 9+00
B–PP–347	PLAN AND PROFILE: "ROSINA 2"	STA. 1+00	TO 10+00

COLLECTION SYSTEM – AREA C

C–PP–101	NOT USED		
C–PP–102	PLAN AND PROFILE: RAVENNA AVENUE	STA. 14+13.84	TO 14+33.83
	LOS OSOS VALLEY RD.	STA. 60+23.36	TO 69+50
C–PP–103	PLAN AND PROFILE: LOS OSOS VALLEY RD.	STA. 69+50	TO 79+50
C–PP–104	PLAN AND PROFILE: LOS OSOS VALLEY RD.	STA. 79+50	TO 90+50
C–PP–105	PLAN AND PROFILE: LOS OSOS VALLEY RD.	STA. 90+50	TO 101+50
C–PP–106	PLAN AND PROFILE: LOS OSOS VALLEY RD.	STA. 101+50	TO 112+50
C–PP–107	PLAN AND PROFILE: RAVENNA AVENUE	STA. 14+13.84	TO 4+25
C–PP–108	PLAN AND PROFILE: RAVENNA AVENUE	STA. 4+25	TO 0+98.87
	HIGHLAND DRIVE	STA. 32+83	TO 27+50
C–PP–109	PLAN AND PROFILE: HIGHLAND DRIVE	STA. 27+50	TO 16+45
C–PP–110	PLAN AND PROFILE: WOODLAND DRIVE	STA. 32+20.46	TO 24+25
C–PP–111	PLAN AND PROFILE: WOODLAND DRIVE	STA. 32+20.46	TO 40+82
C–PP–112	PLAN AND PROFILE: MANZANITA DRIVE	STA. 32+33.15	TO 29+09
	MAR VISTA DRIVE	STA. 32+65.40	TO 27+50
C–PP–113	PLAN AND PROFILE: MANZANITA DRIVE	STA. 32+33.15	TO 40+57
C–PP–114	PLAN AND PROFILE: LILAC DRIVE	STA. 32+50.15	TO 40+73
C–PP–115	PLAN AND PROFILE: MAR VISTA DRIVE	STA. 27+50	TO 16+40
C–PP–116	PLAN AND PROFILE: MAR VISTA DRIVE	STA. 32+65.40	TO 40+27
C–PP–117	PLAN AND PROFILE: HIGHLAND DRIVE	STA. 32+83	TO 41+25
C–PP–118	PLAN AND PROFILE: LOS OSOS VALLEY RD.	STA. 60+23.36	TO 50+36.91
C–PP–119	PLAN AND PROFILE: BRODERSON AVENUE	STA. 15+07.87	TO 6+49.19
C–PP–120	PLAN AND PROFILE: LILAC DRIVE	STA. 22+70.12	TO 30+94
C–PP–121	PLAN AND PROFILE: LOS OSOS VALLEY RD.	STA. 50+36.91	TO 40+21
C–PP–122	PLAN AND PROFILE: WOODLAND DRIVE	STA. 22+37.19	TO 15+98
C–PP–123	PLAN AND PROFILE: MANZANITA DRIVE	STA. 22+53.80	TO 16+01
C–PP–124	PLAN AND PROFILE: MANZANITA DRIVE	STA. 22+53.80	TO 28+65
C–PP–125	PLAN AND PROFILE: LILAC DRIVE	STA. 22+70.12	TO 15+96
C–PP–126	PLAN AND PROFILE: PALISADES AVENUE	STA. 14+17.21	TO 2+25
C–PP–127	PLAN AND PROFILE: HIGHLAND DRIVE	STA. 43+73.01	TO 51+00
	PALISADES AVENUE	STA. 2+25	TO 0+96
C–PP–128	PLAN AND PROFILE: MAR VISTA DRIVE	STA. 42+96.31	TO 40+82
	HIGHLAND DRIVE	STA. 43+73.01	TO 41+83
C–PP–129	PLAN AND PROFILE: BUSH DRIVE	STA. 1+11.90	TO 5+97
C–PP–130	PLAN AND PROFILE: FERRELL AVENUE	STA. 3+61.78	TO 7+38
C–PP–131	PLAN AND PROFILE: 9TH STREET	STA. 0+47.44	TO 6+49
C–PP–132	PLAN AND PROFILE: BAYVIEW HEIGHTS DR.	STA. 12+23.69	TO 5+77.47
	BAY OAKS DRIVE	STA. 1+00	TO 3+25
C–PP–133	PLAN AND PROFILE: BAY OAKS DRIVE	STA. 3+25	TO 15+02.85
C–PP–134	PLAN AND PROFILE: CREST AVENUE	STA. 7+32.03	TO 1+05.96
	GREEN OAKS DRIVE	STA. 11+97.63	TO 11+66
C–PP–135	PLAN AND PROFILE: BAYVIEW HEIGHTS DR.	STA. 5+77.47	TO 1+01
	HIGHLAND DRIVE	STA. 53+38.66	TO 51+00
C–PP–136	PLAN AND PROFILE: GREEN OAKS DRIVE	STA. 0+92	TO 10+54
C–PP–137	PLAN AND PROFILE: WINNELL AVENUE	STA. 4+30.66	TO 1+64
	ANNE AVENUE	STA. 5+31.36	TO 2+09
C–PP–138	PLAN AND PROFILE: CLARANITA AVENUE	STA. 6+26.82	TO 1+91
C–PP–139	PLAN AND PROFILE: 10TH STREET	STA. 0+90.83	TO 7+23
C–PP–140	PLAN AND PROFILE: SUNSET DRIVE	STA. 6+89.92	TO 1+89
C–PP–141	PLAN AND PROFILE: SOUTH BAY BLVD.	STA. 7+39.37	TO 0+93.84
	BAY OAKS DRIVE	STA. 22+11.48	TO 15+69
C–PP–142	PLAN AND PROFILE: LOS OSOS VALLEY RD.	STA. 132+52.25	TO 123+50
C–PP–143	PLAN AND PROFILE: LOS OSOS VALLEY RD.	STA. 123+50	TO 114+10.75
C–PP–144	PLAN AND PROFILE: PECHO ROAD	STA. 6+73.52	TO 1+27.03
C–PP–145	PLAN AND PROFILE: LOS OSOS VALLEY RD.	STA. 23+99.73	TO 29+30.17
C–PP–146	PLAN AND PROFILE: CLELLAND AVENUE	STA. 15+00.75	TO 3+79.42
C–PP–147	PLAN AND PROFILE: HIGHLAND DRIVE	STA. 1+40	TO 11+50
C–PP–148	PLAN AND PROFILE: HIGHLAND DRIVE	STA. 11+50	TO 15+40
C–PP–149	PLAN AND PROFILE: PECHO VALLEY RD.	STA. 23+99.73	TO 12+50
C–PP–150	PLAN AND PROFILE: PECHO VALLEY RD.	STA. 12+50	TO 5+75
C–PP–151	PLAN AND PROFILE: LOS OSOS VALLEY RD.	STA. 29+30.17	TO 39+87
C–PP–152	PLAN AND PROFILE: WOODLAND DRIVE	STA. 1+12	TO 11+50
C–PP–153	PLAN AND PROFILE: WOODLAND DRIVE	STA. 11+50	TO 14+98
	MANZANITA DRIVE	STA. 11+50	TO 15+12
C–PP–154	PLAN AND PROFILE: MANZANITA DRIVE	STA. 1+12	TO 11+50
C–PP–155	PLAN AND PROFILE: LILAC DRIVE	STA. 1+12	TO 11+50
C–PP–156	PLAN AND PROFILE: LILAC DRIVE	STA. 11+50	TO 15+08
	MAR VISTA DRIVE	STA. 11+25	TO 15+54
C–PP–157	PLAN AND PROFILE: MAR VISTA DRIVE	STA. 1+12	TO 11+25
C–PP–158	SUNNY OAKS FORCE MAIN PROFILE: LOS OSOS VALLEY RD.	STA. 132+32.24	TO 112+10

PUMP STATIONS AND WELLS – AREA C

C–C–200	AREA C KEY PLAN
C–C–201	SUNNY OAKS PS AND STANDBY POWER SITE PLAN
C–C–202	EROSION CONTROL PLAN

LANDSCAPE

GENERAL LANDSCAPING

BC–GL–200	IRRIGATION DETAILS – 1
BC–GL–201	IRRIGATION DETAILS – 2
BC–GL–202	PLANTING DETAILS

LANDSCAPING – AREA B

B–L–200	LUPINE PUMP STATION – IRRIGATION PLAN
B–L–201	LOMA HARVEST WELL – IRRIGATION PLAN
B–L–202	PALISADES HARVEST WELL – IRRIGATION PLAN
B–L–203	LUPINE PUMP STATION – PLANTING PLAN
B–L–204	LOMA HARVEST WELL – PLANTING PLAN
B–L–205	PALISADES HARVEST WELL – PLANTING PLAN

LANDSCAPING – AREA C

C–L–200	SUNNY OAKS PUMP STATION – IRRIGATION PLAN
C–L–201	BRODERSON EDS – IRRIGATION PLAN
C–L–202	BRODERSON EDS – IRRIGATION PLAN
C–L–203	BRODERSON EDS – IRRIGATION PLAN
C–L–204	BRODERSON EDS – IRRIGATION PLAN
C–L–205	SUNNY OAKS PUMP STATION – PLANTING PLAN
C–L–206	BRODERSON EDS – PLANTING PLAN
C–L–207	BRODERSON EDS – PLANTING PLAN
C–L–208	BRODERSON EDS – PLANTING PLAN
C–L–209	BRODERSON EDS – PLANTING PLAN

STRUCTURAL

GENERAL STRUCTURAL

BC–GS–200	GENERAL NOTES
BC–GS–201	STANDARD STRUCTURAL DETAILS – 1
BC–GS–202	STANDARD STRUCTURAL DETAILS – 2
BC–GS–203	STANDARD STRUCTURAL DETAILS – 3
BC–GS–204	STANDARD STRUCTURAL DETAILS – 4

STRUCTURAL AREA B AND C

BC–S–200	SUBMERSIBLE PUMP STATION AND VALVE VAULTS – FOUNDATION AND TOP PLAN
BC–S–201	SUBMERSIBLE PUMP STATION AND VALVE VAULTS – SECTION AND DETAILS
BC–S–202	STANDBY POWER BUILDING – FOUNDATION AND ROOF PLAN
BC–S–203	STANDBY POWER BUILDING – SECTIONS AND DETAILS
BC–S–204	POCKET PUMP STATION AND VAULT – FOUNDATION AND TOP PLAN
BC–S–205	POCKET PUMP STATION AND VAULT – SECTION AND DETAILS
BC–S–206	HARVEST WELL BUILDING – FOUNDATION AND ROOF PLAN
BC–S–207	HARVEST WELL BUILDING – SECTION AND DETAILS

ARCHITECTURAL

GENERAL ARCHITECTURAL

BC–GA–200	STANDARD ARCHITECTURAL DETAILS

ARCHITECTURAL – AREA B

B–A–200	STANDBY POWER BUILDINGS ELEVATIONS
B–A–201	STANDBY POWER BUILDINGS SECTIONS
B–A–202	HARVEST WELLS ELEVATIONS AND SECTIONS

ARCHITECTURAL – AREA C

C–A–200	STANDBY POWER BUILDINGS ELEVATIONS
C–A–201	STANDBY POWER BUILDINGS SECTIONS
C–A–202	HARVEST WELLS ELEVATIONS AND SECTIONS

MECHANICAL

GENERAL MECHANICAL

BC–GM–200	STANDARD MECHANICAL DETAILS – 1
BC–GM–201	STANDARD MECHANICAL DETAILS – 2

MECHANICAL AREA B AND C

BC–M–200	SUBMERSIBLE PUMP STATIONS – DUPLEX LAYOUT
BC–M–201	SUBMERSIBLE PUMP STATIONS – TRIPLEX LAYOUT
BC–M–202	STANDBY POWER BUILDING – PLAN AND SECTIONS
BC–M–203	HARVEST WELL BUILDING AND SECTIONS

ELECTRICAL

GENERAL ELECTRICAL

BC–GE–000	STANDARD ELECTRICAL SYMBOLS – 1
BC–GE–001	STANDARD ELECTRICAL SYMBOLS – 2 & LIGHTING FIXTURE SCHEDULE
BC–GE–002	STANDARD ELECTRICAL ABBREVIATIONS AND GENERAL NOTES
BC–GE–003	STANDARD ELECTRICAL DETAILS – 1
BC–GE–004	STANDARD ELECTRICAL DETAILS – 2
BC–GE–005	STANDARD ELECTRICAL DETAILS AND PANEL SCHEDULES

REGISTERED PROFESSIONAL ENGINEER JOHN ARTHUR BERGEN NO. C31069 Exp. 3-31-04 CIVIL STATE OF CALIFORNIA

REV	DATE	BY	DESCRIPTION

SCALE: NO SCALE

WARNING: 0 1/2 1 — IF THIS BAR DOES NOT MEASURE 1" THEN DRAWING IS NOT TO SCALE

DESIGNED L. WONG
DRAWN E. WISNIEWSKI
CHECKED J. BERGEN

SUBMITTED BY
JOHN A. BERGEN — C31069 LICENSE NO. — 2/16/2004 DATE
STEVE J. HYLAND — C23892 LICENSE NO. — 2/16/2004 DATE

DIGALERT — DIAL TOLL FREE 1-800-642-2444 AT LEAST TWO DAYS BEFORE YOU DIG — UNDERGROUND SERVICE ALERT OF NORTHERN CALIFORNIA

LOS OSOS COMMUNITY SERVICES DISTRICT

MWH Walnut Creek, California

LOS OSOS WASTEWATER PROJECT
GENERAL
LIST OF DRAWINGS – 1

SHEET BC–G–003

Job No: 1481166 File: n:\Projects\los_osos\Collect_Sys\BC\gen\BC–G–003.dgn Plot Date: 09–FEB–2004 17:46 $$time$$

LIST OF DRAWINGS (CONTINUED)

ELECTRICAL – AREAS B AND C

BC–E–200	STANDBY POWER BUILDING – TYPICAL ELECTRICAL POWER, LIGHTING AND GROUNDING PLAN
BC–E–201	PS AND STANDBY POWER – TYPICAL CONTROL DIAGRAM – 1
BC–E–202	PS AND STANDBY POWER – TYPICAL CONTROL DIAGRAM – 2

ELECTRICAL – AREA B

B–E–200	GENERAL AREA PLAN – AREA B
B–E–201	LUPINE SUBMERSIBLE PUMP STATION SITE – ELECTRICAL POWER, LIGHTING AND GROUNDING PLAN
B–E–202	LUPINE PS AND STANDBY POWER – SINGLE LINE
B–E–203	LOMA HARVEST WELL BUILDING – ELECTRICAL SITE PLAN
B–E–204	LOMA HARVEST WELL BUILDING – ELECTRICAL POWER, LIGHTING AND GROUNDING PLAN
B–E–205	LOMA HARVEST WELL BUILDING – SINGLE LINE
B–E–206	PALISADES HARVEST WELL BUILDING ELECTRICAL POWER, LIGHTING AND GROUNDING PLAN
B–E–207	PA–DP–01 SINGLE LINE DIAGRAM
B–E–208	HARVEST WELL BUILDING CONTROL DIAGRAM

ELECTRICAL – AREA C

C–E–200	GENERAL AREA PLAN – AREA C
C–E–201	SUNNY OAKS SUBMERSIBLE PUMP STATION SITE – ELECTRICAL POWER, LIGHTING AND GROUNDING PLAN
C–E–202	SUNNY OAKS PS AND STANDBY POWER –SINGLE LINE
C–E–300	BRODERSON EFFLUENT DISPOSAL VAULTS – ELECTRICAL SITE PLAN
C–E–301	EFFLUENT DISPOSAL VAULTS – TYPICAL SINGLE LINE

INSTRUMENT AND CONTROL

GENERAL INSTRUMENTATION

BC–GI–200	INSTRUMENTATION SYMBOLS AND ABBREVIATIONS –1
BC–GI–201	INSTRUMENTATION SYMBOLS AND ABBREVIATIONS –2
BC–GI–202	SCADA SYSTEM ARCHITECTURE
BC–GI–203	FIBER OPTIC CONDUIT PLAN

INSTRUMENTATION – AREA B

B–I–200	PALISADES AND LOMA HARVEST WELLS P AND ID
B–I–201	LUPINE PUMP STATION P AND ID
B–I–202	AREA B INSTRUMENT SCHEDULES

INSTRUMENTATION – AREA C

C–I–200	SUNNY OAKS PUMP STATION P AND ID
C–I–201	BRODERSON EFFLUENT DISPOSAL SITE P AND ID

SURVEY DATA

HORIZONTAL POSITIONS AND ELLIPSOID HEIGHTS ARE BASED ON NORTH AMERICAN DATUM OF 1983, 1991.35 EPOCH ADJUSTMENT OF THE HIGH PRECISION GEODETIC NETWORK AS REFERENCED BY #1315 IN THIS SURVEY, NGS DESIGNATION "A 1315" AND #14, NGS DESIGNATION "942110 TIDAL 14 RESET." THE NAD83 DATUM SUPERSEDED THE NAD27 DATUM

ORTHOMETRIC HEIGHTS (ELEVATIONS) ARE BASED ON THE NORTH AMERICAN VERTICAL DATUM OF 1988 (NAND88) PER #1315 AND #14 AS REFERENCED ABOVE. IN ADDITION AS FIRST ORDER CLASS 1 BENCHMARK NGS DESIGNATION "B 1314" (PT #1314) WAS USED FOR QUALITY CONTROL. THE ORTHOMETRIC HEIGHTS WITHIN THE PROJECT SITE WAS USED FOR QUALITY CONTROL. THE OROTHOMETRIC HEIGHTS WITHIN THE PROJECT SITE ARE APPROXIMATELY ONLY, DUE TO THE DISTANCE BETWEEN THE SITE AND THE BENCHMARKS. THE PURPOSE OF THE MODELING WITHIN THE SITE WAS TO DETERMINE A GOOD ORTHOMETRIC MODEL WITHIN THE SITE AREA ITSELF. NO ATTEMPT WAS MADE TO MAKE THIS MODEL TO EXACTLY MATCH NAVD88.

POTHOLE DATA

AREA	POTHOLE ID	DRAWING	EXISITING GRADE	DEPTH TO TOP	EXISTING AC THICKNESS	LOCATION	DESCRIPTION	NORTHING	EASTING
B	8	B–PP–106	37.5 +/–	47"	7"	PECHO/SKYLINE	6" W	2,313,444.29	5,710,902.23
B	9	B–PP–112	13.8 +/–	–	4"	DON/MITCHELL	SD – NOT FOUND		
B	22	B–PP–160	64.0 +/–	36"	7"	INYO	8" AC W		
B	24	B–PP–154	–	–	7"	SOLANO	HIGH WATER TABLE, FO – NOT FOUND	–	–
B	31	B–PP–154	13.3+/–	27"	5"	SOLANO	30" SD	2,313,787.72	5,710,375.68
C	4	C–PP–107	111.63	38"	7"	RAVENNA/WOODLAND	8" W	2,311,675.83	5,714,481.59
C	5	C–PP–108	172.03	46"	6"	RAVENNA/WOODLAND	8" W	2,310,626.48	5,714,435.24
C	6	C–PP–135	183.88	38"	5"	BAYVIEW HEIGHTS/HIGHLAND	2" G	2,310,552.41	5,716,454.66
C	14	C–PP–102	96.8+/–	T=64" : B=82"	4"	RAVENNA/LOS OSOS VALLEY ROAD	12 – 4" FO COND	–	–
C	15	C–PP–156	148.17	32"	6"	LILAC	2" G	2,311,281.46	5,712,564.49
C	21	C–PP–149	91.21	T=50" : B=60"	9"	PECHO WAY	2 – 4" FO COND	2,311,737.60	5,710,368.11
C	23	C–PP–121	111.42	T=50" : B=81"	8"	LOS OSOS VALLEY ROAD/PINE	MULTIPLE 4" COND (9+)	2,312,119.69	5,713,019.86
C	25	C–PP–104	128.03	T=89" : B=110"	7"	LOS OSOS VALLEY ROAD/10TH STREET	10 – 2" COND	2,311,435.42	5,716,781.97
C	26	C–PP–106	163.46	T=58" : B=78"	4"	LOS OSOS VALLEY ROAD/OAK RIDGE	12 – 4" COND	2,310,899.76	5,718,981.55
C	27	C–PP–143	170.8	T=52" : B=72"	4"	LOS OSOS VALLEY ROAD/WILLOW	MULTIPLE 2" COND	2,310,551.81	5,719,504.75
C	28	C–PP–143	170.93	T=52" : B=69"	4"	LOS OSOS VALLEY ROAD/WILLOW	12 – 4" FO COND	2,310,547.25	5,719,502.45
C	29	C–PP–143	161.95	T=56" : B=77"	5"	LOS OSOS VALLEY ROAD/BUCKSKIN	MULTIPLE 2" COND	2,309,939.37	5,721,302.82
C	30	C–PP–116	155.84	–	4"	MAR VISTA	HIGH WATER TABLE, W – NOT FOUND	2,310,850.40	5,714,702.11

AGENCY CONTACT INFORMATION

WATER

LOCSD
GEORGE MILANES
UTILITIES MANAGER
2122 9TH ST. P.O. BOX 6064
LOS OSOS, CA 93412
(805) 528–9370

CALIFORNIA CITIES WATER CO.
TERRY MAUGHMER
1140 LOS OLIVOS AVE.
LOS OSOS, CA 93402
(805) 528–7341

S&T MUTUAL WATER CO.
DAVE TOLLEY
P.O. BOX 6391
LOS OSOS, CA 93412
(805) 528–0643

STORM DRAINS

COUNTY OF SAN LUIS OBISPO
ROSEMARIE GAGLIONE
DEPARTMENT OF PUBLIC WORKS
COUNTY GOVERNMENT CENTER
ROOM 207
SAN LUIS OBISPO, CA 93408
(805) 788–2318

GAS

SOUTHERN CALIFORNIA GAS CO.
LARRY PEDERSEN
P.O. BOX 818
GOLETA, CA 93116
(805) 681–8029

ELECTRIC

PG&E
CLAIRE MASTIN
4325 S. HIGUERA
SAN LUIS OBISPO, CA 93401
(805) 546–3888

FIRE DEPARTMENT

SOUTH BAY FIRE DEPARTMENT
CHIEF BRUCE PICKENS
2315 BAYVIEW HEIGHTS DR.
LOS OSOS, CA 93402
(805) 528–1053

PHONES/FIBER OPTIC & CABLE TV

SBC
JIM PIERCE/NEIL ZAKARIA
102 CROSS ST.
SAN LUIS OBISPO, CA 93401
(805) 546–7012

AT&T
KEN WEAVER/TERRY MAR
9401 LOS OSOS VALLEY RD.
SAN LUIS OBISPO, CA 93405
(805) 546–2230

QWEST
MIKE GARRISON
9643 SANTA FE SPRINGS ROAD
SANTA FE SPRINGS, CA 90670
562–777–2225

SPRINT
TIBOR LACKEY
1350 W. LAMBERT RD. STE. B
BREA, CA 92821
(714) 781–7051

MCI (USE TO BE WORLDCOM)
DON BECKERMANN
115 W. PALMETTO DR.
PASADENA, CA 91105–2511
(626) 666–3526
FAX (626) 666–3540

CHARTER COMMUNICATIONS
RICK CORDSEN
7555 SAN LUIS AVE.
ATASCADERO, CA 93422
(805) 466–4423

UMAN / FIBER OPTIC

SAN LUIS COASTAL UNIFIED SCHOOL DISTRICT

REGISTERED PROFESSIONAL ENGINEER
JOHN ARTHUR BERGEN
NO. C31069
Exp. 3-31-04
CIVIL
STATE OF CALIFORNIA

REV	DATE	BY	DESCRIPTION

SCALE: NO SCALE

WARNING: 0 1/2 1 — IF THIS BAR DOES NOT MEASURE 1" THEN DRAWING IS NOT TO SCALE

DESIGNED L. WONG
DRAWN E. WISNIEWSKI
CHECKED J. BERGEN

SUBMITTED BY
JOHN A. BERGEN — C31069 LICENSE NO. — 2/16/2004 DATE
STEVE J. HYLAND — C23892 LICENSE NO. — 2/16/2004 DATE

DIGALERT — DIAL TOLL FREE 1-800-642-2444 AT LEAST TWO DAYS BEFORE YOU DIG — UNDERGROUND SERVICE ALERT OF NORTHERN CALIFORNIA

LOS OSOS COMMUNITY SERVICES DISTRICT

MWH Walnut Creek, California

LOS OSOS WASTEWATER PROJECT
GENERAL
SURVEY DATA, POTHOLE DATA, AGENCY CONTACT INFORMATION

SHEET BC–G–004

Job No: 1481166 File: N:\Projects\los_osos\Collect_Sys\BC\gen\BC–G–004.dgn Plot Date: 09–FEB–2004 14:34

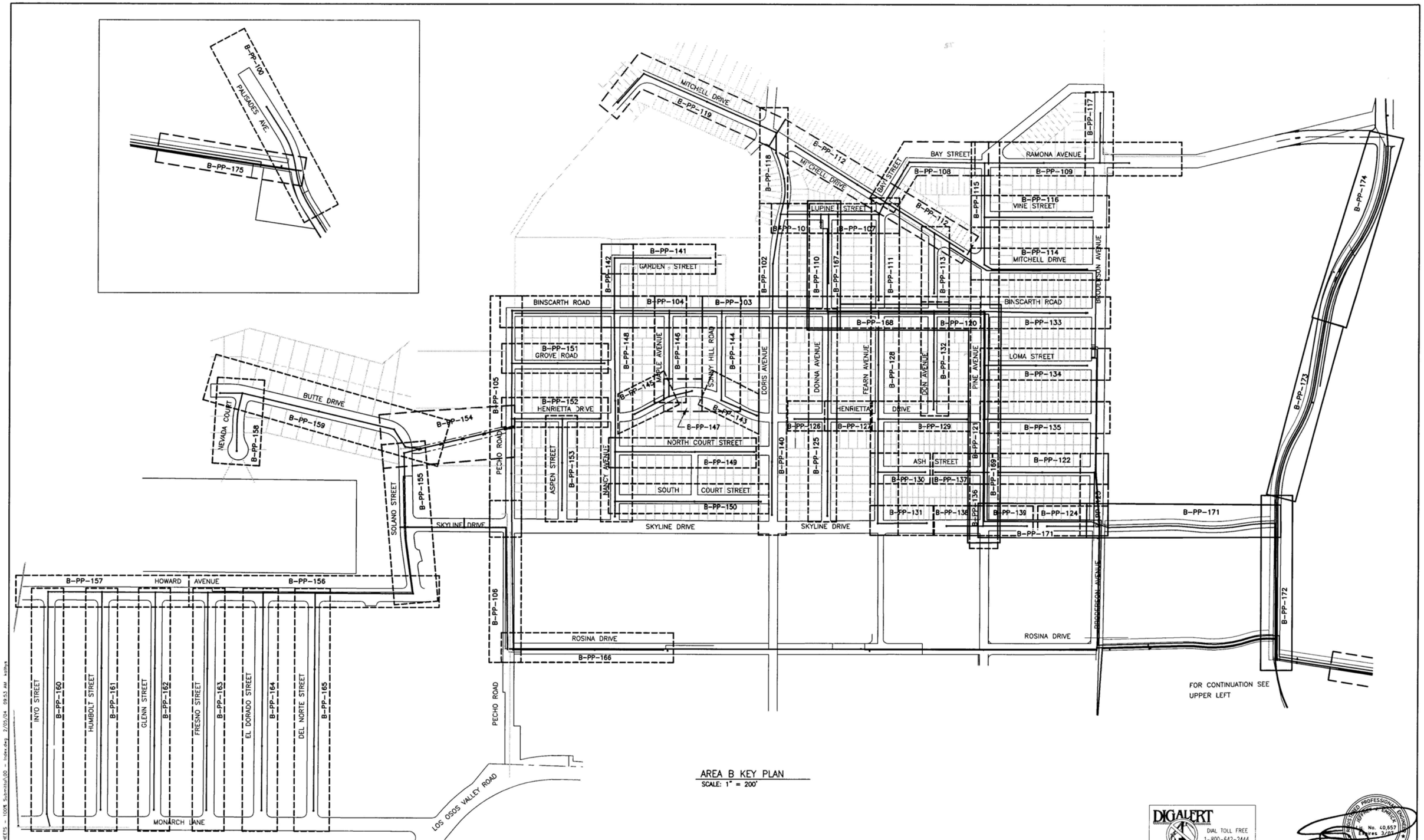

AREA B KEY PLAN
SCALE: 1" = 200'

DIGALERT
DIAL TOLL FREE
1-800-642-2444
AT LEAST TWO DAYS BEFORE YOU DIG
UNDERGROUND SERVICE ALERT OF NORTHERN CALIFORNIA

REGISTERED PROFESSIONAL ENGINEER
No. 40,657
Expires 3/05
CIVIL
STATE OF CALIFORNIA

REV	DATE	BY	DESCRIPTION

SCALE

WARNING
0 1/2 1
IF THIS BAR DOES NOT MEASURE 1" THEN DRAWING IS NOT TO SCALE

DESIGNED SH/GH
DRAWN KS/JM/AF/BF
CHECKED SH

SUBMITTED BY
JOHN A. BERGEN — C31069 — 02/16/04 (LICENSE NO. / DATE)
STEVE J. HYLAND — C23892 — 02/16/04 (LICENSE NO. / DATE)

LOS OSOS COMMUNITY SERVICES DISTRICT

MWH Walnut Creek, California

eda design professionals
civil engineers • land surveyors • land planners
1998 santa barbara st • san luis obispo, ca 93401
ph: 805/549-8658 • email: eda@edainc.com

LOS OSOS WASTEWATER PROJECT
AREA B - KEY PLAN

SHEET
BC-G-005

K:\22650000\Jones\EDA-Work\PP-SHEETS - 100% Submittal\00 - Index.dwg 2/05/04 09:53 AM ashys

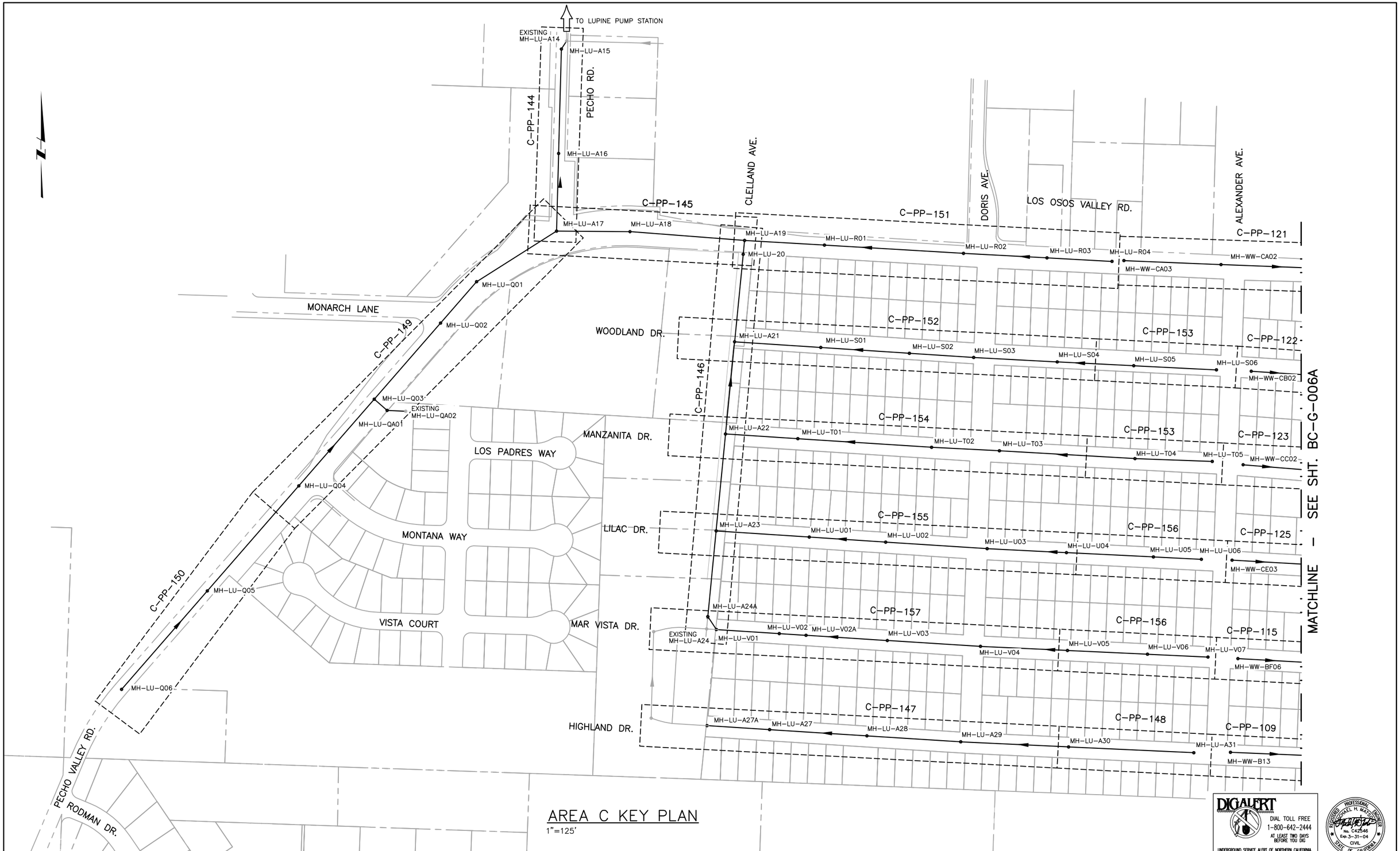

AREA C KEY PLAN

1"=125'

REV	DATE	BY	DESCRIPTION

SCALE: 1" = 125'

WARNING: 0 1/2 1 — IF THIS BAR DOES NOT MEASURE 1" THEN DRAWING IS NOT TO SCALE

DESIGNED MDT/MHM
DRAWN JCM
CHECKED GEH

SUBMITTED BY
JOHN A. BERGEN — C31069 LICENSE NO. — 2-16-2004 DATE
STEVEN J. HYLAND — C23892 LICENSE NO. — 2-16-2004 DATE

LOS OSOS COMMUNITY SERVICES DISTRICT

MWH Walnut Creek, California

RMC Raines, Melton & Carella, Inc.

LOS OSOS WASTEWATER PROJECT

AREA C – KEY PLAN I

SHEET BC-G-006

C:\Program Files\ACAD2000\CADRMC\ALOSOSOS\BC-G-006.dwg, Layout1, Feb 04, 2004 10:07pm, John

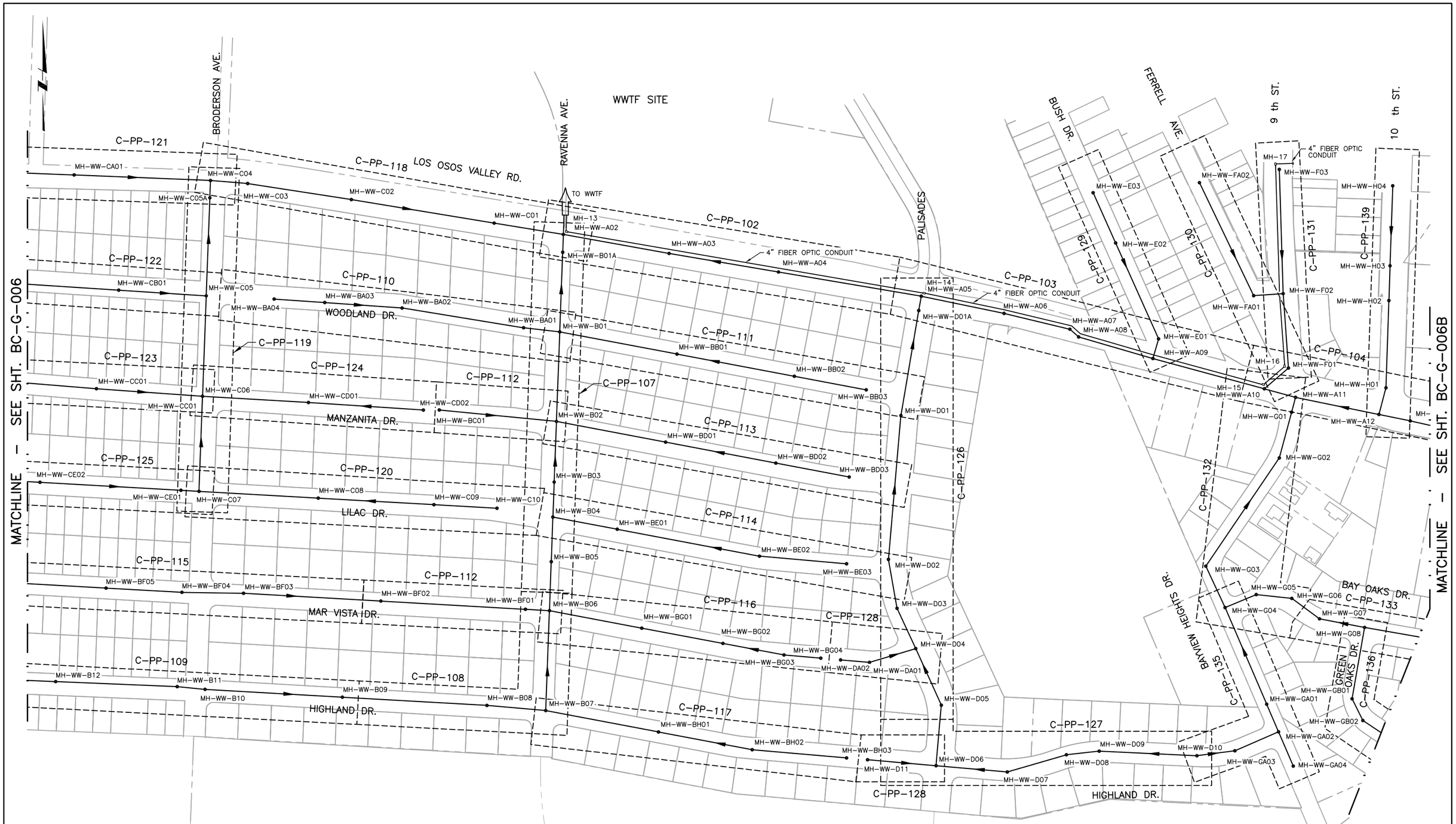

AREA C KEY PLAN

1"=125'

DIGALERT
DIAL TOLL FREE
1-800-642-2444
AT LEAST TWO DAYS BEFORE YOU DIG
UNDERGROUND SERVICE ALERT OF NORTHERN CALIFORNIA

REGISTERED PROFESSIONAL ENGINEER
MICHAEL H. MAXWELL
No. C42546
Exp. 3-31-04
CIVIL
STATE OF CALIFORNIA

REV	DATE	BY	DESCRIPTION

SCALE: 1" = 125'

WARNING: 0 1/2 1 — IF THIS BAR DOES NOT MEASURE 1" THEN DRAWING IS NOT TO SCALE

DESIGNED MDT/MHM
DRAWN JCM
CHECKED GEH

SUBMITTED BY
JOHN A. BERGEN — C31069 LICENSE NO. — 2-16-2004 DATE
STEVEN J. HYLAND — C23892 LICENSE NO. — 2-16-2004 DATE

LOS OSOS COMMUNITY SERVICES DISTRICT

MWH Walnut Creek, California

RMC Raines, Melton & Carella, Inc.

LOS OSOS WASTEWATER PROJECT

AREA C – KEY PLAN II

SHEET BC-G-006A

C:\Program Files\ACAD2000\CADRMC\ALOSOSOS\BC-G-006A.dwg, Layout1, Feb 04, 2004 10:09pm, John

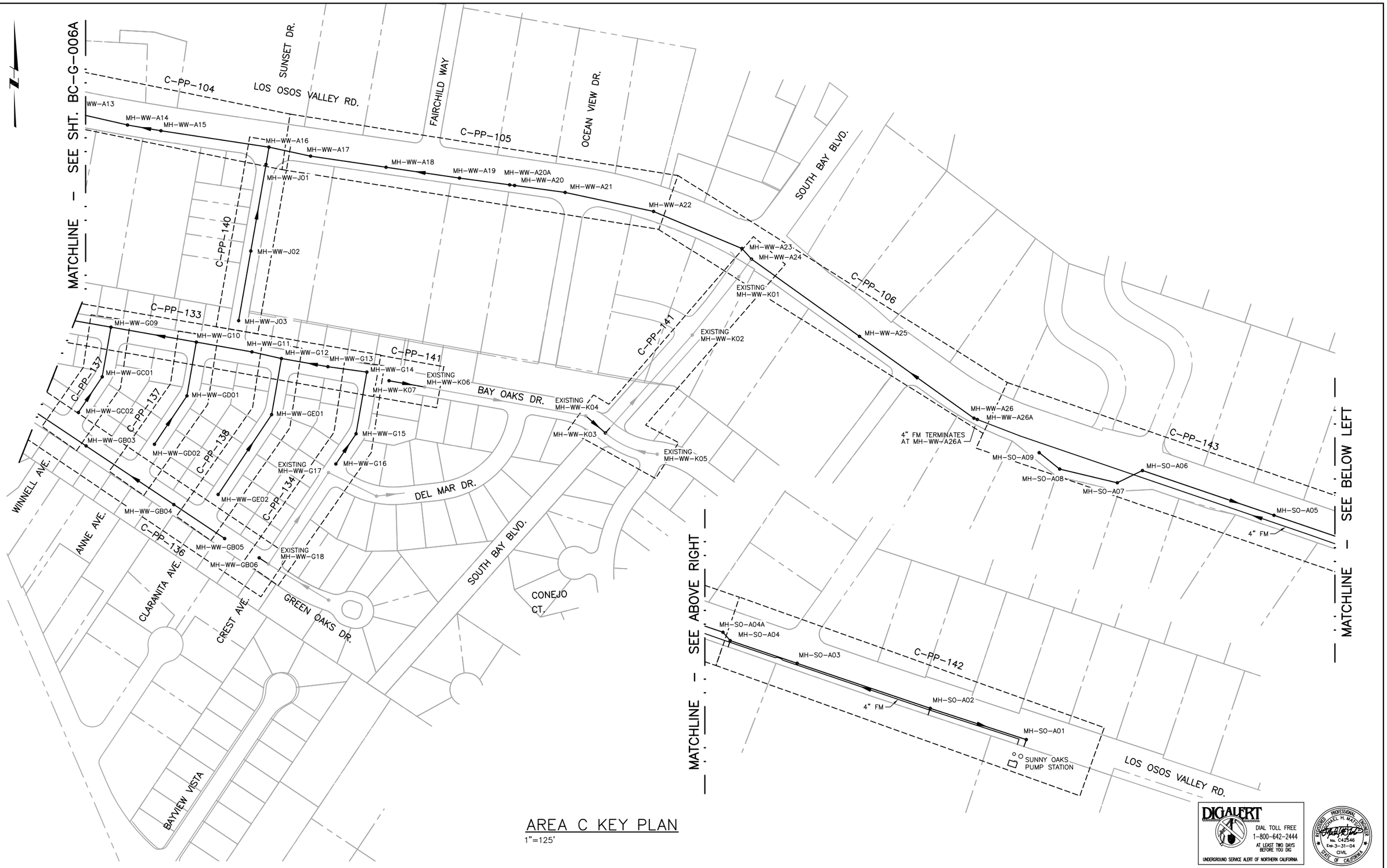

AREA C KEY PLAN

1"=125'

DIGALERT
DIAL TOLL FREE
1-800-642-2444
AT LEAST TWO DAYS BEFORE YOU DIG
UNDERGROUND SERVICE ALERT OF NORTHERN CALIFORNIA

REGISTERED PROFESSIONAL ENGINEER
MICHAEL H. MAHONEY
No. C42546
Exp. 3-31-04
CIVIL
STATE OF CALIFORNIA

REV	DATE	BY	DESCRIPTION

SCALE: 1" = 125'

WARNING: 0 1/2 1 — IF THIS BAR DOES NOT MEASURE 1" THEN DRAWING IS NOT TO SCALE

DESIGNED MDT/MHM
DRAWN JCM
CHECKED GEH

SUBMITTED BY
JOHN A. BERGEN — C31069 LICENSE NO. — 2-16-2004 DATE
STEVEN J. HYLAND — C23892 LICENSE NO. — 2-16-2004 DATE

LOS OSOS COMMUNITY SERVICES DISTRICT

MWH Walnut Creek, California

RMC Raines, Melton & Carella, Inc.

LOS OSOS WASTEWATER PROJECT

AREA C – KEY PLAN III

SHEET BC-G-006B

C:\Program Files\ACAD2000\CADRMC\ALOSOS05\BC-G-006B.dwg, Layout1, Feb 04, 2004 10:10pm, John

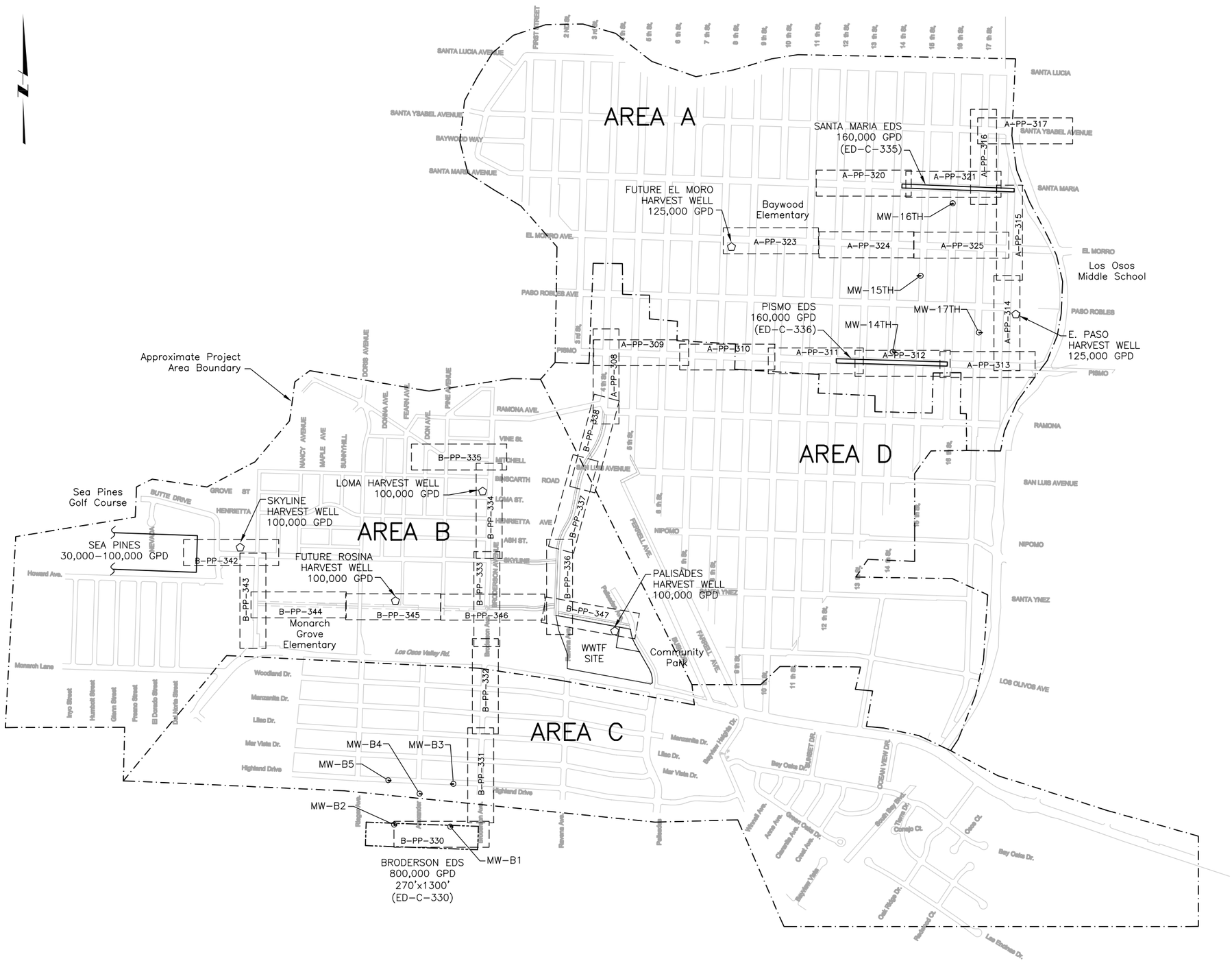

MONITORING WELL LOCATIONS FOR EDS		
MONITORING WELL NAMES	NORTHIING	EASTING
MW-B1	2310180.53	5713135.97
MW-B2	2310204.46	5712486.41
MW-B3	2310674.50	5713171.68
MW-B4	2310561.20	5712780.87
MW-B5	2310717.59	5712417.75
MW-14TH	2315673.58	5718252.17
MW-15TH	2316551.11	5718575.41
MW-16TH	2317390.89	5718946.10
MW-17TH	2315895.95	5719247.72

NOTE:
INSTALL MONITORING WELLS PER DETAILS ED-96 AND ED-97 ON DRAWING ED-C-339 AND SPECIFICATIONS.

REGISTERED PROFESSIONAL ENGINEER
FAN KAT
No. C-60027
Exp. 6-30-04
CIVIL
STATE OF CALIFORNIA

REV	DATE	BY	DESCRIPTION

SCALE
1"=600'

WARNING
0 1/2 1
IF THIS BAR DOES NOT MEASURE 1" THEN DRAWING IS NOT TO SCALE

DESIGNED KFK
DRAWN KFK
CHECKED LZT

SUBMITTED BY
JOHN A. BERGEN — C31069 — LICENSE NO. — 2-16-2004 — DATE
STEVEN J. HYLAND — C23892 — LICENSE NO. — 2-16-2004 — DATE

DIGALERT
DIAL TOLL FREE
1-800-642-2444
AT LEAST TWO DAYS BEFORE YOU DIG
UNDERGROUND SERVICE ALERT OF NORTHERN CALIFORNIA

LOS OSOS
COMMUNITY SERVICES DISTRICT

MWH
Walnut Creek, California

LOS OSOS WASTEWATER PROJECT
EFFLUENT DISPOSAL SYSTEM
OVERALL KEY PLAN

SHEET
BC-G-007

XREF: los_ed_bdr c-ed-drn c-ed-bs x-feat-aerl x-feat-row x-feat-topo ppkeyplan x-sup-topo Morro and Corr Easement
FILE: N:\Projects\los_osos\Collect_Sys\ED\civ\BC-G-007.dwg USER: kxkai Feb 09, 2004 2:19pm Job No: 1481166

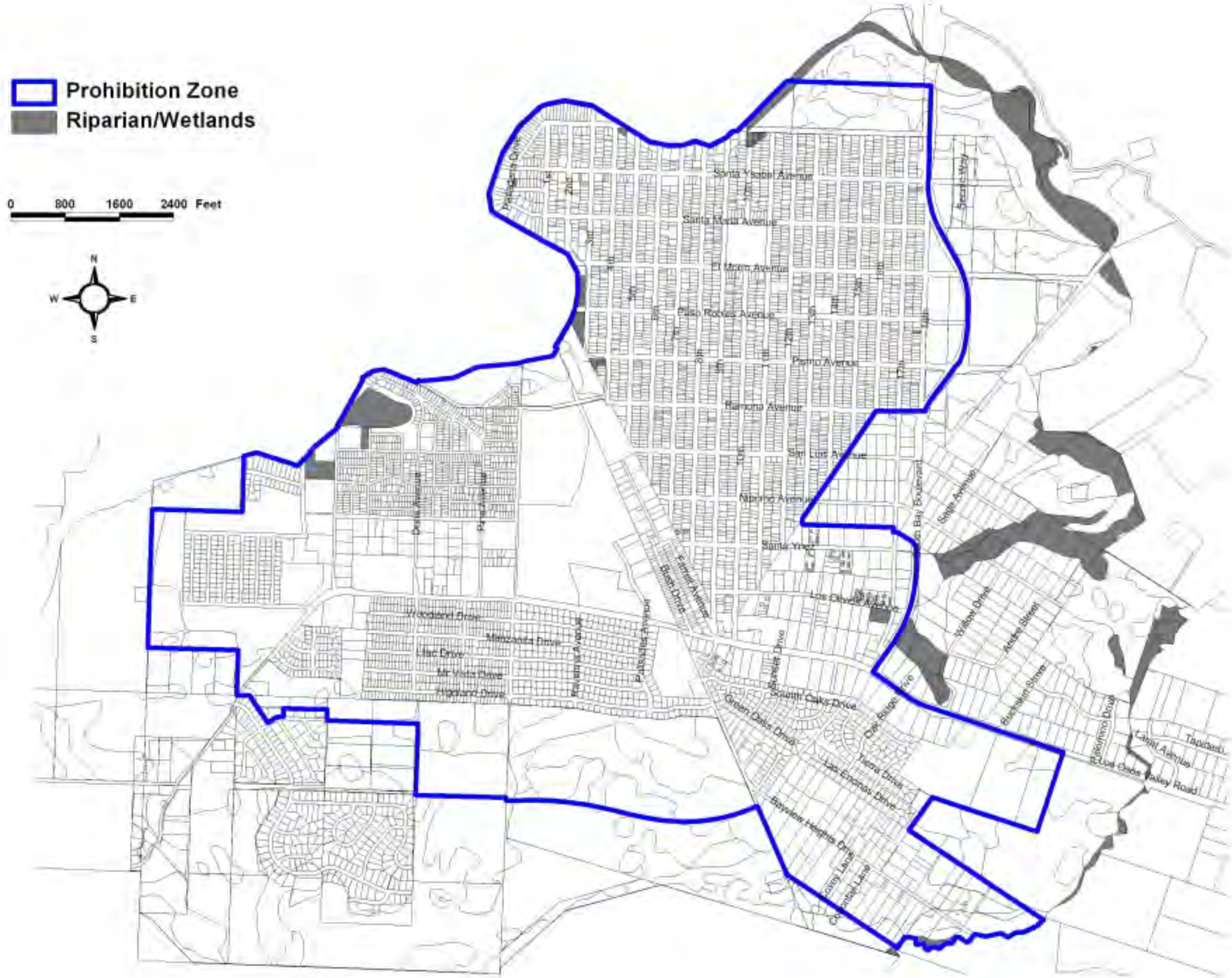

REV	DATE	BY	DESCRIPTION

SCALE: NO SCALE

WARNING: 0 1/2 1 — IF THIS BAR DOES NOT MEASURE 1" THEN DRAWING IS NOT TO SCALE

DESIGNED CMCA
DRAWN CMCA
CHECKED CMCA

SUBMITTED BY
JOHN A. BERGEN — C31069 LICENSE NO. — 2/16/2004 DATE
STEVE J. HYLAND — C23892 LICENSE NO. — 2/16/2004 DATE

DIGALERT — DIAL TOLL FREE 1-800-642-2444 AT LEAST TWO DAYS BEFORE YOU DIG — UNDERGROUND SERVICE ALERT OF NORTHERN CALIFORNIA

LOS OSOS COMMUNITY SERVICES DISTRICT

MWH Walnut Creek, California

Crawford Multari & Clark Associates

LOS OSOS WASTEWATER PROJECT

RIPARIAN AND WETLANDS LOCATIONS

SHEET BC-G-008

REGISTERED PROFESSIONAL ENGINEER — JOHN ARTHUR BERGEN — NO. C31069 — Exp. 3-31-04 — CIVIL — STATE OF CALIFORNIA

Job No: 1481166 File: N:\Projects\los_osos\Collect_Sys\BC\gen\BC-G-008.dgn Plot Date: 09-FEB-2004 14:35

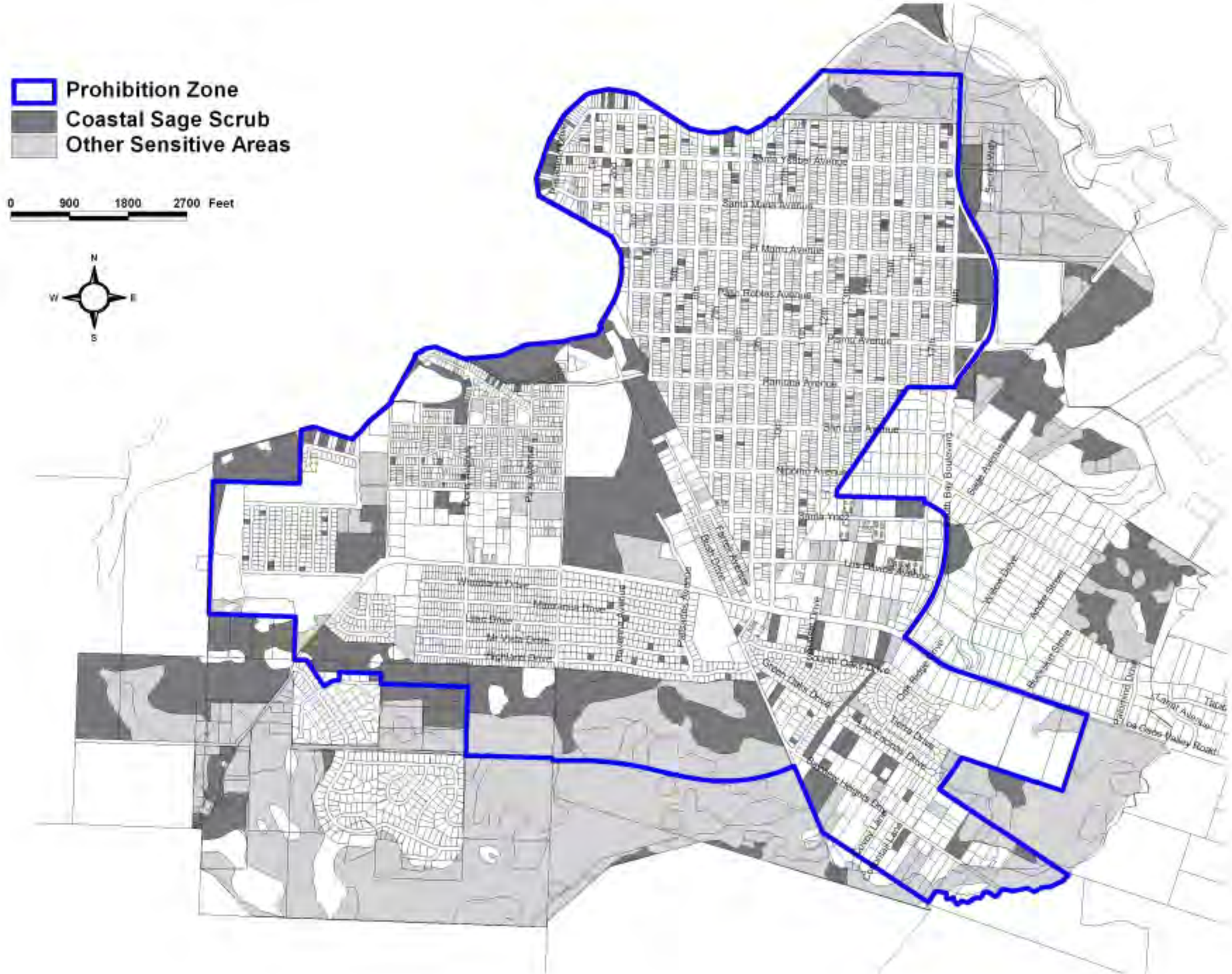

REV	DATE	BY	DESCRIPTION

SCALE: NO SCALE

WARNING: 0 1/2 1 — IF THIS BAR DOES NOT MEASURE 1" THEN DRAWING IS NOT TO SCALE

DESIGNED CMCA
DRAWN CMCA
CHECKED CMCA

SUBMITTED BY
JOHN A. BERGEN — C31069 LICENSE NO. — 2/16/2004 DATE
STEVE J. HYLAND — C23892 LICENSE NO. — 2/16/2004 DATE

DIGALERT — DIAL TOLL FREE 1-800-642-2444 AT LEAST TWO DAYS BEFORE YOU DIG — UNDERGROUND SERVICE ALERT OF NORTHERN CALIFORNIA

LOS OSOS COMMUNITY SERVICES DISTRICT

MWH Walnut Creek, California

Crawford Multari & Clark ASSOCIATES

LOS OSOS WASTEWATER PROJECT

COASTAL SAGE SCRUB AND OTHER SENSITIVE AREAS

SHEET BC-G-009

REGISTERED PROFESSIONAL ENGINEER — JOHN ARTHUR BERGEN — NO. C31069 — Exp. 3-31-04 — CIVIL — STATE OF CALIFORNIA

Job No: 1481166 File: N:\Projects\los_osos\Collect_Sys\BC\gen\BC-G-009.dgn Plot Date: 09-FEB-2004 14:35

GENERAL NOTES

1. APPROVED PLANS – NO CONSTRUCTION SHALL BE STARTED WITHOUT PLANS APPROVED BY THE LOS OSOS COMMUNITY SERVICES DISTRICT (LOCSD). THE LOCSD INSPECTOR SHALL BE NOTIFIED AT LEAST 48 HOURS PRIOR TO STARTING OF CONSTRUCTION. ANY CONSTRUCTION DONE WITHOUT APPROVED PLANS AND PRIOR TO NOTIFICATION TO THE LOCSD INSPECTOR WILL BE REJECTED AND WILL BE AT THE CONTRACTOR'S AND/OR OWNER'S RISK.

   THE CONTRACTOR SHALL HAVE COPIES OF THE APPROVED PLANS FOR THIS PROJECT ON THE SITE AT ALL TIMES AND SHALL BE FAMILIAR WITH ALL APPLICABLE STANDARDS AND SPECIFICATIONS.

2. STANDARD SPECIFICATIONS – ALL CONSTRUCTION WORK AND INSTALLATIONS SHALL CONFORM TO THE LOCSD STANDARD PLANS AND SPECIFICATIONS, AND ALL WORK SHALL BE SUBJECT TO THE APPROVAL OF THE LOCSD ENGINEER.

3. INSPECTION AGREEMENT – AN EXECUTED INSPECTION AGREEMENT IS REQUIRED PRIOR TO THE START OF CONSTRUCTION.

4. INSPECTION – THE LOCSD INSPECTOR, ACTING ON BEHALF OF THE LOCSD ENGINEER, MAY REQUIRE REVISIONS TO THE APPROVED PLANS AND SPECIFICATIONS TO SOLVE UNFORESEEN PROBLEMS THAT MAY ARISE IN THE FIELD.

5. ENCROACHMENT PERMITS – NO WORK WITHIN A COUNTY OR CALTRANS RIGHT–OF–WAY SHALL BE PERFORMED WITHOUT AN ENCROACHMENT PERMIT.

6. UTILITY NOTIFICATION – PRIOR TO BEGINNING ANY EARTHWORK, THE CONTRACTOR SHALL BE RESPONSIBLE FOR CONTACTING ALL AGENCIES INVOLVED AND SHALL LOCATE ALL FACILITIES PRIOR TO EXCAVATION IN ANY AREA. THE CONTRACTOR SHALL CALL DIG ALERT (USA), TOLL FREE AT 1–800–642–2444 AT LEAST 48 HOURS PRIOR TO THE START OF CONSTRUCTION.

7. EXISTING UTILITIES – THE LOCATIONS AND ELEVATIONS OF EXISTING UTILITIES WHERE SHOWN ON THEPLANS ARE BASED ON AVAILABLE RECORDS, AND ARE APPROXIMATE ONLY. THE CONTRACTOR AGREES THAT HE SHALL ASSUME SOLE AND COMPLETE RESPONSIBILITY FOR LOCATING OR HAVING LOCATED ALL UNDERGROUND UTILITIES AND OTHER FACILITIES AND FOR PROTECTING THE SAME DURING THE COURSE OF CONSTRUCTING THE PROJECT. ANY DEVIATIONS FROM THE PLAN LOCATION OF ANY EXISTING FACILITIES SHALL BE IMMEDIATELY BROUGHT TO THE ATTENTION OF THE LOCSD INSPECTOR.

8. SAFETY – NEITHER THE LOS OSOS COMMUNITY SERVICES DISTRICT, THE ENGINEER OF RECORD, THE CONSTRUCTION MANAGER, OR OTHER DISTRICT ACENTS WILL BE RESPONSIBLE FOR COMPLIANCE WITH SAFETY MEASURES OR REGULATIONS. THE CONTRACTOR SHALL DESIGN, CONSTRUCT, AND MAINTAIN ALL SAFETY DEVICES, AND SHALL BE SOLELY RESPONSIBLE FOR CONFORMING TO ALL LOCAL, STATE, AND FEDERAL, SAFETY AND HEALTH STANDARDS, LAWS, AND REGULATIONS.

9. INDEMNIFICATION – THE APPLICANT AGREES THAT IN ACCORDANCE WITH GENERALLY ACCEPTED CONSTRUCTION PRACTICES, APPLICANT SHALL ASSUME SOLE AND COMPLETE RESPONSIBILITY FOR THE CONDITION OF THE JOB SITE DURING THE COURSE OF THE PROJECT, INCLUDING THE SAFETY OF PERSONS AND PROPERTY; THAT THIS REQUIREMENT SHALL APPLY CONTINUOUSLY AND NOT BE LIMITED TO NORMAL WORKING HOURS; AND THE APPLICANT SHALL DEFEND, INDEMNIFY, AND HOLD THE DISTRICT AND DISTRICT'S AGENTS, EMPLOYEES AND CONSULTANTS HARMLESS FROM ANY AND ALL CLAIMS, DEMANDS, DAMAGES, COSTS, EXPENSES (INCLUDING ATTORNEY'S FEES), JUDGEMENTS OR LIABILITIES ARISING OUT OF THE PERFORMANCE OR ATTEMPTED PERFORMANCE OF THE WORK ON THIS PROJECT; EXCEPT THOSE CLAIMS, DEMANDS, DAMAGES, COSTS, EXPENSES (INCLUDING ATTORNEY'S FEES), JUDGEMENTS OR LIABILITIES RESULTING FROM THE NEGLIGENCE OR WILLFUL MISCONDUCT OF THE DISTRICT.

10. PROTECTION OF PROPERTY – THE CONTRACTOR SHALL BE RESPONSIBLE FOR THE PROTECTION OF PUBLIC AND PRIVATE PROPERTY ADJACENT TO HIS WORK, AND SHALL EXERCISE DUE CAUTION TO AVOID DAMAGE TO SUCH PROPERTY. THE CONTRACTOR SHALL REPLACE OR REPAIR TO THEIR ORIGINAL CONDITION, ALL IMPROVEMENTS WITHIN OR ADJACENT TO THE WORK AREA WHICH ARE NOT DESIGNATED FOR REMOVAL, AND WHICH ARE DAMAGED OR REMOVED AS A RESULT OF HIS OPERATIONS.

11. SITE CONDITIONS – THE CONTRACTOR SHALL CONTINUALLY REVIEW JOB SITE CONDITIONS. CONDITIONS REQUIRING CONSTRUCTION DIFFERENT FROM THAT SHOWN ON THE PLANS SHALL BE REPORTED TO THE LOCSD INSPECTOR PRIOR TO PROCEEDING WITH THE AFFECTED CONSTRUCTION.

12. CONTRACTORS RECORD OF CHANGES – THE CONTRACTOR SHALL MAINTAIN A CURRENT, COMPLETE, AND ACCURATE RECORD OF ALL CHANGES WHICH DEVIATE FROM THE CONSTRUCTION AS SHOWN ON THESE PLANS AND SPECIFICATIONS FOR THE PURPOSE OF PROVIDING THE ENGINEER OF RECORD WITH A BASIS FOR THE PREPARATION OF RECORD DRAWINGS.

13. RECORD DRAWINGS – THE CONTRACTOR SHALL MAINTAIN A SET OF MARKED UP AS–BID DRAWINGS SHOWING ACTUAL INSTALLED AND FIELD CONDITIONS.

14. PLAN CORRECTIONS – NOT USED.

15. MANHOLE ENTRY SHALL BE IN COMPLIANCE WITH THE CONFINED SPACE ENTRY REQUIREMENTS OF CAL–OSHA, THE COUNTY OF SAN LUIS OBISPO AND THE LOS OSOS COMMUNITY SERVICES DISTRICT.

16. EXISTING UTILITIES IN THE PROJECT AREA INCLUDING ACP WATER MAINS MAY BE IN A FRAGILE CONDITION. THE CONTRACTOR SHALL EXERCISE CAUTION WHEN WORKING NEAR TO EXISTING UTILITIES.

17. PRIOR TO CONSTRUCTION, THE CONTRACTOR SHALL LOCATE ALL TRAFFIC SIGNAL LOOPS, CABLES, AND CONDUITS IN THE VICINITY OF THE WORK. TRAFFIC SIGNALS SHALL BE MAINTAINED IN OPERATION DURING CONSTRUCTION AT ALL TIMES. CONTRACTOR SHALL PROTECT EXISTING TRAFFIC SIGNAL LOOPS AND FACILITIES. DAMAGED FACILITIES SHALL BE RESTORED TO THEIR EXISTING CONDITION. TRAFFIC SIGNAL FACILITIES RECORD DRAWINGS ARE AVAILABLE FROM THE CITY. SENSOR LOOPS, CABLES AND CONDUITS THAT ARE DAMAGED BY THE WORK SHALL BE REPLACED AT NO COST TO THE OWNER. REPLACEMENT OF DAMAGED ITEMS SHALL BE TO THE SATISFACTION OF THE GOVERNING AGENCY.

18. PLAN ELEVATIONS OR DEPTHS FOR EXISTING UNDERGROUND UTILITIES ARE BASED ON RECORD DRAWINGS AND SURVEY INFORMATION AND ARE APPROXIMATE ONLY. WHERE NO ELEVATIONS ARE SHOWN, NO SUCH INFORMATION WAS AVAILABLE DURING DESIGN AND CONTRACTOR SHALL EXPOSE THESE UTILITIES FOR FIELD VERIFICATION PRIOR TO CONSTRUCTION.

19. UTILITY SERVICES AND THEIR LOCATION ARE NOT SHOWN ON THESE DRAWINGS. THE CONTRACTOR SHALL TAKE NECESSARY MEASURES TO LOCATE AND PROTECT SERVICES DURING CONSTRUCTION. NO INTERRUPTION OF UTILITY SERVICES SHALL BE ALLOWED.

20. DIMENSIONS FOR ALL OTHER EXISTING STRUCTURES, REFERENCING PIPING, PAVING, AND OTHER NON–STRUCTURAL, ITEMS ARE APPROXIMATE. THE CONTRACTOR SHALL FIELD VERIFY ALL DIMENSIONS AND CONDITIONS AND REPORT ALL MAJOR DISCREPANCIES TO THE ENGINEER 5 DAYS IN ADVANCE OF CONSTRUCTION IN THE AREA.

21. THE CONTRACTOR SHALL PROTECT ALL EXISTING IMPROVEMENTS NOT DESIGNATED FOR DEMOLITION OR REMOVAL AND REPLACEMENT. ALL DAMAGED EXISTING IMPROVEMENTS AND THOSE IMPROVEMENTS THAT HAVE BEEN REMOVED OR TEMPORARILY RELOCATED SHALL BE RESTORED BY THE CONTRACTOR TO A CONDITION EQUAL TO OR BETTER THAN ITS CONDITION PRIOR TO CONSTRUCTION. IMPROVEMENTS DESIGNATED FOR DEMOLITION SHALL BE DEMOLISHED AND DISPOSED OF BY THE CONTRACTOR. DURING THE CONSTRUCTION PERIOD, ANY DAMAGE TO THE ADJACENT IMPROVEMENTS SHALL BE REPAIRED OR REPLACED BY THE CONTRACTOR AT NO COST TO THE DISTRICT.

22. FOR ALL STANDARD MANHOLES THE COORDINATE LOCATIONS REPRESENT THE CENTERLINE OF THE MANHOLE BASE UNLESS INDICATED OTHERWISE ON THESE DRAWINGS. MANHOLES LOCATED AT THE INTERSECTIONS MAY BE ADJUSTED SUBJECT TO FIELD VERIFICATION BY THE CONTRACTOR. LOCATIONS OF MANHOLES THAT ARE NOT AT PIPELINE INTERSECTIONS MAY BE ADJUSTED SUBJECT TO APPROVAL BY THE ENGINEER.

23. CONTRACTOR SHALL OBTAIN A PERMIT FROM THE DISTRICT OR APPROPRIATE WATER COMPANY FOR THE USE OF CONSTRUCTION WATER. THE PERMIT SHALL BE APPROVED BY THE DISTRICT'S FIRE DEPARTMENT.

24. THE CONTRACTOR SHALL ARRANGE A PRE–CONSTRUCTION CONFERENCE. NOTIFY THE DISTRICT AT LEAST 5 WORKING DAYS PRIOR TO START OF WORK.

25. DISCREPANCIES BETWEEN COORDINATES, BEARINGS AND LENGTHS, AND STATIONING SHALL BE RESOLVED IN THE FOLLOWING ORDER OF PRECEDENCE:
    1. COORDINATES
    2. BEARINGS AND LENGTHS
    3. STATIONING – STATIONING IS BASED ON CONSTRUCTION BASELINE.

26. IN ALL LOCATIONS WHERE TRENCH PLATE IS USED ON THIS PROJECT THE CONTRACTOR SHALL SUPPLY SKID RESISTANT COATING ON THE TRENCH PLATE AND COLD MIX A.C. AT THE EDGES. TRENCH PLATES SHALL BE NOTCHED INTO AC PAVING, WEDGED, AND SHIMMED TO PREVENT SLIPPAGE AND ROCKING UNDER TRAFFIC.

27. MECHANICAL EQUIPMENT USED ON THIS PROJECT SHALL BE SELECTED TO MINIMIZE DAMAGE TO THE EXISTING PAVEMENT ALONG THE PROJECT SITE AND TO THE PROJECT. THE CONTRACTOR SHALL REPLACE DAMAGED A.C. PAVEMENT IN ACCORDANCE WITH THE CONTRACT DOCUMENTS, AT NO ADDITIONAL COST TO THE DISTRICT.

28. NOT USED.

29. SANITARY SEWER INSTALLATION MAY REQUIRE CURB, GUTTER AND SIDEWALK, AND CONCRETE V–DITCH/VALLEY GUTTER REMOVAL AND REPLACEMENT. THE CONTRACTOR SHALL INCLUDE ALL COSTS IN ITS BID THEREFOR.

30. ALL PAVEMENT SHALL BE SAWCUT PRIOR TO EXCAVATION AND PRIOR TO PAVEMENT PATCHING. AREAS OF A.B. UNDERMINING SHALL BE SAW CUT 12 INCHES BEYOND UNDERMINING AND AC PAVED IN ACCORDANCE WITH THE REQUIREMENTS OF THE LOCAL GOVERNING AGENCY OR THESE DRAWINGS, WHICHEVER ARE MORE STRINGENT.

31. THE CONTRACTOR SHALL REMOVE AND PROPERLY DISPOSE OF ALL SURPLUS EXCAVATION MATERIAL AND DEBRIS, PROMPTLY FROM THE SITE AND SHALL MAINTAIN THE SITE IN A NEAT AND ORDERLY CONDITION. CONTRACTOR SHALL OBTAIN ALL NECESSARY FILL AND GRADING PERMITS.

32. THE CONTRACTOR IS RESPONSIBLE FOR ARRANGING FOR REQUIRED INSPECTIONS. THE PRESENCE OR ABSENCE OF AN INSPECTOR WILL NOT RELIEVE THE CONTRACTOR OF FULL RESPONSIBILITY FOR THE PROPER PERFORMANCE OF WORK.

33. ALL IMPROVEMENTS SHALL BE IN ACCORDANCE WITH DISTRICT STANDARDS AND SPECIFICATIONS UNLESS OTHERWISE NOTED.

34. THE CONTRACTOR SHALL MAINTAIN VEHICLE ACCESS TO ALL PROPERTIES ADJACENT TO THE WORK THROUGHOUT THE PERIOD OF CONSTRUCTION.

35. THE CONTRACTOR SHALL COMPLY WITH ALL FEDERAL, STATE, COUNTY, AND DISTRICT LAWS AND ORDINANCES RELATING TO THE SAFETY AND CHARACTER OF WORK, EQUIPMENT AND LABOR PERSONNEL. THIS SHALL INCLUDE, BUT IS NOT LIMITED TO, THE SHORING OF TRENCHES, VENTILATORS OF CONFINED SPACES, CONFORMANCE TO TRAFFIC CONTROL REQUIREMENTS INCLUDING THE PROVISION AND MAINTENANCE OF BARRICADES AND THE PREPARATION AND IMPLEMENTATION OF TRAFFIC CONTROL PLANS AS REQUIRED.

36. PIPE LENGTHS ARE THROUGH MANHOLE AS INDICATED. STATIONING IS ALONG THE CONSTRUCTION BASELINE.

37. ALL OPEN CUT CONSTRUCTION FOR PIPING, ACCESS PITS, AND MANHOLES SHALL HAVE SHORING SYSTEMS IN COMPLIANCE WITH CAL OSHA, COUNTY OF SAN LUIS OBISPO AND DISTRICT REQUIREMENTS. THE APPROVED SHORING SYSTEM SHALL BE USED FOR CONSTRUCTION OF OPEN CUT INTERCEPTOR PIPING AND MICROTUNNELING PITS. CONTRACTOR SHALL REPAIR AND REPLACE WITH LIKE AND KIND ANY DAMAGE CAUSED BY INSTALLATION AND REMOVAL OF SHORING SYSTEMS TO PRECONSTRUCTION CONDITION.

38. CONTRACTOR SHALL SUBMIT A STORM WATER POLUTION PREVENTION PLAN (SWPPP) TO THE COUNTY AND SHALL COMPLY WITH ALL PROVISIONS OF ITS SWPPP. REFER TO THE SPECIFICATIONS.

39. THE CONTRACTOR SHALL ABIDE BY ALL PERMITS OBTAINED BY THE DISTRICT. SEE SPECIFICATIONS SECTION 01060.

40. THE CONTRACTOR SHALL OBTAIN CONSTRUCTION PERMITS FROM REGULATORY, UTILITY, AND ANY OTHER AGENCIES REQUIRING PERMITING FOR THIS CONSTRUCTION WORK. THE CONTRACTOR SHALL PROVIDE A WRITTEN SIGNED RELEASE FROM EACH AGENCY UPON COMPLETION OF CONSTRUCTION.

41. ALL DEWATERING WATER SHALL BE DISCHARGED IN ACCORDANCE WITH RWQCB, COUNTY OF SAN LUIS OBISPO AND DISTRICT PERMIT REQUIREMENTS INCLUDING DESILTING, AND ONLY TO APPROVED DISCHARGE LOCATIONS. DEWATERING WELLS SHALL BE ABANDONED ACCORDING TO RWQCB, COUNTY OF SAN LUIS OBISPO AND DISTRICT REQUIREMENTS.

42. CONTRACTOR SHALL PROTECT AND MAINTAIN EXISTING STORM DRAIN FACILITIES AT ALL TIMES.

43. CONTRACTOR SHALL PROVIDE AND MAINTAIN TEMPORARY PAVEMENT AT ALL TIMES.

44. CONTRACTOR SHALL BACKFILL TRENCH TO GRADE AND/OR TRAFFIC PLATE AT THE END OF EACH DAY.

45. CONTRACTOR SHALL MAINTAIN SANITARY SEWER SERVICE AT ALL TIMES. PROVIDE BYPASS PUMPING FACILITIES INCLUDING STANDBY PUMPS AND GENERATORS. EXISTING SEPTIC TANK SYSTEMS SHALL BE MAINTAINED UNTIL THE NEW SANITARY SEWER SYSTEM IS READY FOR LATERAL CONNECTIONS TO BE MADE.

46. EROSION CONTROL METHODS SHALL BE IMPLEMENTED AT ALL DISTURBED UNPAVED AREAS THAT ARE NOT LANDSCAPED. LANDSCAPED AREAS SHALL BE RESTORED TO EXISTING CONDITION.

47. PROVIDE K–RAIL AND CHAINLINK FENCING AROUND ALL TUNNEL ACCESS PITS. K–RAIL AND FENCE SHALL CONFORM TO THE STANDARD PLANS AND SPECIFICATIONS. PROVIDE BARRICADES WITH FLASHING LIGHTS AT EACH PIT LOCATION.

48. CONTRACTOR SHALL IDENTIFY EXISTING MONUMENTS THAT WILL BE IMPACTED BY CONSTRUCTION. CONTRACTOR SHALL RESTABLISH MONUMENTS WITH RECORD OF SURVEY.

49. AERIAL PHOTOS USED TO PREPARE SURFACE FEATURES SHOWN ON PLANS WERE TAKEN IN 1995 AND MAY NOT ACCURATELY DEPICT EXISTING CONDITIONS. CONTRACTOR SHALL FIELD VERIFY CONDITIONS PRIOR TO CONSTRUCTION AND INCLUDE COSTS IN IT'S BID THEREFOR.

50. ALL SEWERS SHALL STRICTLY CONFORM TO THE LINES AND GRADES SHOWN ON THE DRAWINGS.

51. CONTRACTOR SHALL EXERCISE EXTREME CAUTION WHILE WORKING AROUND GAS, FIBER OPTIC AND ELECTRIC UTILITIES.

52. CONTRACTOR SHALL MONITOR GROUND SURFACE AND UNDERGROUND UTILITIES FOR THE PRESENCE OF MICROTUNNEL SLURRY OR EVIDENCE OF HYDROFRACTURE AT ALL TIMES DURING MICROTUNNEL ACTIVITIES ALONG ENTIRE MICROTUNNELED ALIGNMENT.

53. LOW OVERHEAD ELECTRICAL AND TELEPHONE LINES ARE PRESENT IN THE PROJECT AREA. CONTRACTOR SHALL EXERCISE EXTREME CAUTION WHILE WORKING AROUND OVERHEAD UTILITIES.

54. BORE AND RECEIVING PITS SIZING SHALL BE DETERMINED BY CONTRACTOR AND SHALL BE SOLID SHEETED WITH CONTINUOUSLY INTERLOCKED SHEET PILES.

55. CONTRACTOR SHALL MAINTAIN TRAFFIC AND ACCESS PER THE TRAFFIC CONTROL REQUIREMENTS OF THE CONTRACT DOCUMENTS AND THE COUNTY OF SAN LUIS OBISPO.

REGISTERED PROFESSIONAL ENGINEER
JOHN ARTHUR BERGEN
NO. C31069
Exp. 3-31-04
CIVIL
STATE OF CALIFORNIA

REV	DATE	BY	DESCRIPTION

SCALE: NO SCALE

WARNING: 0 1/2 1 — IF THIS BAR DOES NOT MEASURE 1" THEN DRAWING IS NOT TO SCALE

DESIGNED L. WONG
DRAWN E. WISNIEWSKI
CHECKED J. BERGEN

SUBMITTED BY
JOHN A. BERGEN — C31069 LICENSE NO. — 2/16/2004 DATE
STEVE J. HYLAND — C23892 LICENSE NO. — 2/16/2004 DATE

DIGALERT — DIAL TOLL FREE 1-800-642-2444 AT LEAST TWO DAYS BEFORE YOU DIG — UNDERGROUND SERVICE ALERT OF NORTHERN CALIFORNIA

LOS OSOS COMMUNITY SERVICES DISTRICT

MWH Walnut Creek, California

LOS OSOS WASTEWATER PROJECT
GENERAL
GENERAL NOTES

SHEET BC–G–010

Job No: 1481166 File: N:\Projects\los_osos\Collect_Sys\BC\gen\BC-G-010.dgn Plot Date: 09-FEB-2004 14:36

FLUID ABBREVIATION	FUNCTION THIS LIST INCLUDES SOME LINES NOT USED IN THIS PROJECT	PIPING MATERIALS (SEE SCH AT RIGHT) EXPOSED PIPING (SEE NOTE 14) 2" DIA AND SMALLER	EXPOSED PIPING 2½" DIA AND LARGER	BURIED PIPING (SEE NOTE 13) 2" DIA AND SMALLER	BURIED PIPING 2½" DIA AND LARGER	FIELD TEST REQUIREMENTS (SEE NOTE 3 AND NOTE 4) MINIMUM TEST PRESSURE PSI	TEST MEDIUM	LEAKAGE ALLOWANCE (SEE NOTE 2)
A	AERATION	1,16,18	5,11,16,18	1,16,18	5,11,16,18	25	AIR	(A)(D)
AW	FILTER AIR WASH	16	16	16	16	25	AIR	(A)(D)
BD	BOTTOM DRAIN	--	26	--	26	50	WATER	(A)
BP	BYPASS	--	8	--	8	25	WATER	(A)
BW	FILTER BACKWASH	--	8	--	8	75	WATER	(A)
C	CONDENSATE	29*	29*	29*	29*	125	WATER	(A)
CAW	CHANNEL AGITATION WATER	16	16	16	16	25	WATER	(A)
CD	CHEMICAL DRAIN AND VENT	13,17,23	13,17,23	13,17,23	13,17,23	NOTE 7	--	--
CL	CHLORINE (GAS OR LIQUID STATE)	10	--	10	--	300	DRY AIR	(A)(D)
CLS	CHLORINE SOLUTION	16	16	16	16	125	WATER	(A)
CLV	CHLORINE GAS UNDER VACUUM	16	16	16	16	15 IN Hg	VACUUM	(A)(E)
CN	CENTRATE	--	26	--	26	50	WATER	(A)
CS	CAUSTIC SODA	6	6	6	6	125	WATER	(A)
CSL	CIRCULATED SLUDGE	--	30	--	30	50	WATER	(A)
CV	CHLORINATOR VENT AND DETECTION LINE	16	16	16	16	NOTE 8	--	--
DCS	DEFOAMING CHEMICAL SOLUTION	16	16	16	16	125	WATER	(A)
DM	DISPOSAL MAIN	25	11,25	16	11,33	150	WATER	(A)
DN	DECANT	--	26	--	26	50	WATER	(A)
DSL	DIGESTED SLUDGE	--	30	--	30	50	WATER	(A)
DW	DEMINERALIZED WATER	16,18	16,18	16,18	16,18	125	WATER	(A)
EE	ENGINE EXHAUST	14*	14*	14	14	NOTE 8	--	--
EWR	ENGINE COOLING WATER RETURN	1*	1*	1	1	125	WATER	(A)
EWS	ENGINE COOLING WATER SUPPLY	1*	1*	1	1	125	WATER	(A)
F	FROTH	30	30	30	30	50	WATER	(A)
FA	FOUL AIR	--	18	--	18	10	AIR	(A)(D)
FE	FINAL EFFLUENT	--	8	--	8	50	WATER	(A)
FM	FORCE MAIN	25	11,25	16	11,33	125	WATER	(A)
FOR	FUEL OIL RETURN	9	9	9	9	125	AIR	(A)(D)
FOS	FUEL OIL SUPPLY	9	9	9	9	125	AIR	(A)(D)
FS	FROTH SPRAY	2	2	2	2	125	WATER	(A)
FSP	FIRE PROTECTION SPRINKLER SYSTEM	NOTE 10	NOTE 10	NOTE 10	NOTE 10	NOTE 9	WATER	--
G	GRIT	--	26	--	26	50	WATER	(A)
H	HYPOCHLORITE	16	16	16	16	125	WATER	(A)
HM	HARVEST MAIN	25	11	16	11,33	150	WATER	(A)
HR	HEATING WATER RETURN	1*	1*	1*	1*	125	WATER	(A)
HS	HEATING WATER SUPPLY	1*	1*	1*	1*	125	WATER	(A)
HWR	DOMESTIC HOT WATER RETURN	24*	2*	24*	2*	125	WATER	(A)
HWS	DOMESTIC HOT WATER SUPPLY	24*	2*	24*	2*	125	WATER	(A)
IA	INSTRUMENT AIR	24	2	24	2	125	AIR	(A)(D)
IE	INTERMEDIATE EFFLUENT	--	8	--	8,28	50	WATER	8(A) 28(B)
LA	LIQUID ALUM	16	16	16	16	125	WATER	(A)
LO	LUBE OIL	9	9	9	9	125	AIR	(A) (D)
LPG	LIQUEFIED PETROLEUM GAS	3	3	3	3	NOTE 7	AIR	--
LS	LIME SLURRY	NOTE 15	NOTE 15	NOTE 15	NOTE 15	NOTE 8	--	--
LSP	LANDSCAPING SPRINKLER SYSTEM	2,16	2,16	2,16	2,16	NOTE 7	--	--
MA	MURIATIC ACID	25	25	25	25	125	AIR	(A)(D)
ML	MIXED LIQUOR	2	2,8,26,28	2	2,8,26,28	50	WATER	2,8,26(A) 28(B)
NG	NATURAL GAS	9	9	9	9	NOTE 7	AIR	--
O	OZONE	15	15	15	15	50	AIR	(A)(D)
OF	OVERFLOW	--	8	--	8	25	WATER	(A)
PA	PLANT AIR	7	7	7	7	300	AIR	(A)(D)
PD	PLANT DRAIN	2	8,12	2	8,12,22,28	NOTE 6	WATER	2,8(A) 12,28(B) 22(C)
PEA	POLYMER - ANIONIC	16	16	16	16	125	WATER	(A)
PEC	POLYMER-CATIONIC	16	16	16	16	125	WATER	(A)
PEF	PRIMARY EFFLUENT	--	8,26	--	8,26	25	WATER	(A)
PEN	POLYMER-NONIONIC	16	16	16	16	125	WATER	(A)
PI	PLANT INFLUENT	--	21,26	--	21,26	NOTE 6	WATER	(B)
PO	PLANT OVERFLOW	2	8	2	8,28	NOTE 6	WATER	2,8(A) 28(B)
PW	POTABLE WATER	2,24	2	2,24	2,11,19	125	WATER	2,11,24(A) 19(B)
RAS	RETURN ACTIVATED SLUDGE	--	26	--	26	50	WATER	(A)
REW	RECLAIMED WATER	--	8	--	8	75	WATER	(A)
RSL	RAW SLUDGE	--	30	--	30	50	WATER	(A)
RW	RAW WATER	2	8	2	8,28	125	WATER	2,8(A) 28(B)
RWL	RAINWATER LEADER	4,12	4,12	12	12	NOTE 7	--	--
S	SCUM	--	30	--	30	50	WATER	(A)
SA	SAMPLE LINE (SEE LIST AT RIGHT)	16,18,24	--	16,18,24	--	125	WATER	(A)
SC	SPARE CHEMICAL	16	16	16	16	125	WATER	(A)
SD	SANITARY DRAIN AND VENT	4,12	12	12	12,21	NOTE 7	--	--
SDR	STORM DRAIN	--	8	--	22,28	NOTE 6	WATER	8(A) 28(B) 22(C)
SE	SECONDARY EFFLUENT	--	8,26	--	8,26	50	WATER	(A)
SF	SLUDGE FILTRATE	--	26	--	26	50	WATER	(A)
SG	SLUDGE GAS	31	31	31	31	15	AIR	(A)(D)
SI	SODIUM SILICATE	6,16	6,16	6,16	6,16	125	WATER	(A)
SN	SUPERNATANT	--	26	--	26	50	WATER	(A)
SO	SULFUR DIOXIDE (GAS OR LIQUID STATE)	10	--	10	--	300	DRY AIR	(A)(D)
SOA	SULFURIC ACID	25	25	--	--	125	AIR	(A)(D)
SOS	SULFUR DIOXIDE SOLUTION	16	16	16	16	125	WATER	(A)
SOV	SULFUR DIOXIDE GAS UNDER VACUUM	16	16	16	16	15 IN Hg	VACUUM	(A)(E)
SPD	SUMP PUMP DISCHARGE	2	26	2	26	50	WATER	(A)
SS	SANITARY SEWER	25	11	16	11,27,32	NOTE 7	WATER OR AIR	NOTE 7
ST	STEAM (LOW PRESSURE TO 10 PSI)	29*	29*	29*	29*	125	WATER	(A)
SU	STRUCTURE UNDERDRAIN	--	--	--	20	NO TEST REQ'D		
SUC	STRUCTURE UNDERDRAIN COLLECTOR	--	12	--	12,21	NOTE 6	WATER	(C)
SW	FILTER SURFACE WASHWATER	14,16,18	8,14,15,16,18	2,16,18	2,8,15,16,18	125	WATER	(A)
TPR	THICKENER PRESSURIZED RECYCLE	--	26	--	26	50	WATER	(A)
TS	THICKENER SUBNATANT	--	26	--	26	50	WATER	(A)
TSL	THICKENED SLUDGE	--	30	--	30	50	WATER	(A)
TSO	THICKENER SUBNATANT OVERFLOW	--	26	--	26	50	WATER	(A)
UW	UTILITY WATER (NON-POTABLE WATER)	2,24	2,11	2,24	2,11,19	125	WATER	2,11,24(A) 19(B)
V	VACUUM	24	2	24	2	15 IN Hg	VACUUM	(A)(E)
WAS	WASTE ACTIVATED SLUDGE	--	26	--	26	50	WATER	(A)
WLO	WASTE LUBE OIL	9	9	9	9	50	AIR	(A)(D)
WW	FILTER WASTE WASHWATER	--	8	--	8	NOTE 6	WATER	(A)

(* SEE NOTE 5)

PIPING MATERIAL SCH (SEE NOTE 4)

GROUP NO	PIPE (SEE NOTE 13)	FITTINGS	VALVES, 6" AND SMALLER (SEE NOTE 1, 11 & 16)
1	STEEL, ASTM A53, SCH 40, BLACK WELDED.	2½" AND SMALLER, MALLEABLE IRON, ANSI B16.3, THREADED, BANDED, BLACK, 150 PSI OR STEEL, ANSI B16.9, BUTT-WELDED. 3" AND LARGER, CAST IRON, ANSI B16.1, 125 PSI FLGD OR MECH CPLG.	BRONZE, THREADED, GATE, CRANE NO. 428 UB OR STOCKHAM B-105. GLOBE, CRANE NO. 14-1/2P OR STOCKHAM B-29, CHECK, CRANE NO.37 OR STOCKHAM B-319. STEEL, LUBRICATED PLUG, ROCKWELL FIG. 142 OR 143 OR POWELL FIG 2200 OR 2201, ECCENTRIC PLUG, DEZURIK SERIES 118 KEYSTONE 1512. BALL, JENKINS NO.900T OR JAMESBURY FIG.351
2	STEEL, ASTM A53, SCH 40, BLACK WELDED, GALVANIZED	2½" AND SMALLER, MALLEABLE IRON, ANSI B16.3, THREADED, BANDED, GALVANIZED 150 PSI. 3" AND LARGER, CAST IRON, ANSI B16.1, 125 PSI FLGD OR MECH CPLG.	2½" AND SMALLER, ECCENTRIC PLUG, SYNTHETIC RUBBER FACED, DEZURIK 118S OR HOMESTEAD 1512. BALL, JENKINS NO. 900T OR JAMESBURY FIG. 351 3" AND LARGER, ECCENTRIC PLUG, SYNTHETIC RUBBER FACED, DEZURIK 118F OR KEYSTONE 1522 OR 1532 EWG. GATE, AWWA 500. BUTTERFLY, AWWA, FLGD.
3	STEEL, ASTM A106 OR A53, SCH 80, SEAMLESS, BLACK.	FORGED STEEL, ANSI B16.11, SOCKET WELDED OR THREADED. BLACK, 2000 PSI, OR STEEL, ANSI B16.9, BUTT-WELDED, SCH 80.	CAST IRON, LUBRICATED PLUG, ROCKWELL FIG. 214 OR 305 OR POWELL FIG. 2210 OR 2211.
4	SAME AS GROUP NO. 1	CAST IRON, ANSI B16.12, THREADED, DRAINAGE PATTERN.	--------
5	WELDED STEEL, AWWA C200, UNLINED.	WELDED STEEL, FABRICATED, AWWA C200, UNLINED.	AS INDICATED ON DRAWINGS
6	STEEL, ASTM A106, OR A53, SCH 40, SEAMLESS, BLACK.	STEEL, ANSI B16.9, BUTT-WELDED. CAST IRON, ANSI B16.1, 125 PSI, FLGD. FORGED STEEL, SOCKET WELDED, ANSI B16.11, 2000 PSI OR STEEL, ANSI B16.5, 150 PSI FLGD.	CAST IRON, FLGD, LUBRICATED PLUG, ROCKWELL FIG 143 OR POWELL FIG 2201.
7	SAME AS GROUP NO. 2.	MALLEABLE IRON, ANSI B16.3, THREADED, BANDED, GALVANIZED, 300 PSI.	BRONZE THREADED, GLOBE, CRANE NO. 212P OR 229C OR STOCKHAM B-62 OR B-32. BALL, JENKINS NO. 900T OR JAMESBURY FIG. 351CHECK, CRANE NO. 27 OR STOCKHAM B-322.
8	WELDED STEEL, AWWA C200.	WELDED STEEL, AWWA C200, FABRICATED.	AS INDICATED ON DRAWINGS.
9	SAME AS GROUP NO. 1.	2½" AND SMALLER, MALLEABLE IRON, ANSI B16.3, THREADED, BANDED, BLACK, 150 PSI. 3" AND LARGER, STEEL, ANSI B16.9, BUTT-WELDED	ECCENTRIC PLUG, DEZURIK SERIES 118 OR KEYSTONE 1512, CHECK, CRANE NO. 336E OR WALWORTH NO. 904 OR POWELL FIG 668Y. BALL, JENKINS NO. 900T OR JAMESBURY FIG. 351.
10	SAME AS GROUP NO. 3.	1-1/4" AND SMALLER, FORGED STEEL, ANSI B16.11, THREADED OR SOCKET WELDED, BLACK, 3000 PSI, WITH FLGD AMMONIA UNIONS. 1-1/2" AND LARGER, STEEL, ANSI B16.9, BUTT-WELDED OR FLGD, SCH 80	SEMI-PLUG AND YOKE TYPE OR BALL FOR CHLORINE SERVICE, FORGED CARBON STEEL
11	DUCTILE IRON, ANSI A21.51, (AWWA C151) OR CAST IRON ANSI A21.6, 150 PSI, BELL AND SPIGOT, MECH JTS, MECH CPLG, OR 125 PSI FLGD (TYPICAL SERVICE - WATER LINES)	DUCTILE IRON OR CAST IRON, ANSI A21.10, OR AWWA C110, BELL AND SPIGOT, MECH CPLG, FLGD OR MECH JTS, 250 PSI, (PRESSURE RATING) 12" AND SMALLER, 150 PSI, (PRESSURE RATING) 14" AND LARGER, WITH 125 PSI ANSI B16.1 FLANGES.	GATE, AWWA C500, 'O' RING SEALS, MECH JTS ENDS, MUELLER A-2380-20, OR EDDY-IOWA (CLOW) F-5155. BUTTERFLY, AWWA. ECCENTRIC PLUG, DEZURIK SERIES 118 OR KEYSTONE 1512, OR BALL, PRATT OR W-K-M.
12	CAST IRON SOIL, ANSI/ASTM A-74, SERVICE WEIGHT, BELL AND SPIGOT OR HUBLESS. AT THE OPTION OF THE CONTRACTOR, DUCTILE IRON (GROUP NO. 11) MAY BE SUBSTITUTED	CAST IRON SOIL, ANSI/ASTM A-74, SERVICE WEIGHT, BELL AND SPIGOT OR HUBLESS. AT THE OPTION OF THE CONTRACTOR, DUCTILE IRON (GROUP NO 11) MAY BE SUBSTITUTED.	AS INDICATED ON DRAWINGS.
13	CORROSION RESISTANT (HIGH SILICON CONTENT) CAST IRON, SERVICE WEIGHT, BELL AND SPIGOT OR HUBLESS.	CORROSION RESISTANT (HIGH SILICON CONTENT) CAST IRON, SERVICE WEIGHT, BELL AND SPIGOT OR HUBLESS.	--------
14	STAINLESS STEEL, TYPE 316, ASTM A312, SCH 40S.	STAINLESS STEEL, TYPE 316 ANSI B16.3, SCREWED, 150 PSI, ANSI B16.9, BUTT-WELDED, SCH 40S, OR 150 PSI FLGD.	STAINLESS STEEL, BALL, FLGD, LADISH NO. 4202, OR JAMESBURY TYPE A/D150F. CHECK, LADISH, NO.5272 OR STOCKHAM FIG. 15 SF 316 OR AS SHOWN ON DRAWINGS.
15	STAINLESS STEEL, TYPE 316, ASTM A312, SCH 10S.	STAINLESS STEEL, TYPE 316 ANSI B16.9 BUTT-WELDED SCH 150 PSI FLGD.	STAINLESS STEEL, AS INDICATED ON DRAWINGS.
16	POLYVINYL CHLORIDE, SCH 80, NORMAL IMPACT. ASTM D1785	POLYVINYL CHLORIDE, SCH 80, NORMAL IMPACT, SOCKET SOLVENT WELD JTS, ASTM D2467.	POLYVINYL CHLORIDE, BALL, DIAPHRAGM, BUTTERFLY, BALL OR LIFT CHECK. CHEMTROL, HILLS-MCCANNA OR GSR-R.G. SLOAN CO.
17	POLYPROPYLENE, ASTM D2146, SCH 40, WITH HEAT FUSED JTS.	POLYPROPYLENE, SCH 40, DRAINAGE TYPE WITH HEAT FUSED SOCKET JTS.	--------
18	FIBERGLASS REINFORCED PLASTIC, ASTM D2996, FILAMENT-WOUND, SOCKET AND SPIGOT ENDS, ADHESIVE BONDED.	FIBERGLASS REINFORCED PLASTIC, FILAMENT-WOUND, SOCKET ENDS, ADHESIVE BONDED, OR FIBERGLASS FLGD.	PLASTIC LINED, FLGD. FLANGES TO MATCH 150 PSI ANSI B16.5 DIMENSIONS, OR AS INDICATED ON DRAWINGS.
19	POLYVINYL CHLORIDE PRESSURE PIPE ASTM D2241 WITH BELL AND SPIGOT JTS.	CAST IRON, 150 PSI, FOR POLYVINYL CHLORIDE PIPE, AWWA C110 CEMENT MORTAR LINED, AWWA C104.	SAME AS GROUP NO. 11.
20	NOT USED	NOT USED	--------
21	NOT USED	NOT USED	--------
22	REINFORCED CONCRETE, ASTM C76, T&G JTS. (TYPICAL SERVICE-CULVERTS)	SAME AS GROUP NO. 8	--------
23	TEMPERED GLASS. (ARMORED, WHERE BURIED). ANSI/ASTM C599	TEMPERED GLASS DRAINAGE TYPE WITH COMPRESSION CPLG AND TEFLON JTS. ANSI/ASTM C599 (ARMORED WHERE BURIED)	--------
24	COPPER, ASTM B88, TYPE K, SOFT TEMPERED WHERE BURIED, HARD TEMPERED WHERE EXPOSED.	WROUGHT COPPER OR CAST BRONZE, ANSI B16.22, SOLDER JOINT, 150 PSI, OR COMPRESSION FITTINGS. (FOR OXYGEN PIPING USE SILVER SOLDER, FOR COMPRESSED AIR PIPING USE 95-5 TIN-ANTIMONY SOLDER)	BRONZE, SOLDER JOINT, GLOBE, CRANE NO. 1310 OR STOCKHAM B-14. CHECK, CRANE NO. 1342 OR 36, OR STOCKHAM B-309 OR B-345. GATE, CRANE NO. 1320 OR 426, OR STOCKHAM B-104 OR B-105.
25	STEEL, ASTM A106 OR A53, SCH 40, SEAMLESS, BLACK, SARAN OR POLYPROPYLENE-LINED	STEEL, ANSI B16.5, 150 PSI FLGD, SARAN OR POLYPROPYLENE-LINED.	CAST STEEL PLUG, DIAPHRAGM OR CHECK, 150 PSI FLGD, SARAN OR POLYPROPYLENE-LINED.
26	SAME AS GROUP NO. 11 (TYPICAL SERVICE - SLUDGE AND SEWAGE LINES)	SAME AS GROUP NO. 11.	ECCENTRIC PLUG, SYNTHETIC RUBBER FACED, DEZURIK 118F OR KEYSTONE 1522. SWING TYPE CHECK, CRANE NO. 383 OR POWELL FIG. 559. BALL, PRATT OR W-K-M.
27	POLYVINYL CHLORIDE GRAVITY SEWER PIPE, ASTM D3034, BELL AND SPIGOT. (SDR 35)	POLYVINYL CHLORIDE, ANSI/ASTM D3034, BELL AND/OR SPIGOT. (SDR 35)	--------
28	REINFORCED CONCRETE, AWWA C302, CLASS-SEE DRAWINGS. (TYPICAL SERVICE - PRESSURE PIPELINES)	SAME AS GROUP NO. 8.	AS INDICATED ON DRAWINGS.
29	SAME AS GROUP NO. 1.	2" AND SMALLER, MALLEABLE IRON, ANSI B16.3, THREADED, BANDED, BLACK, 150 PSI. 2-½" AND LARGER, STEEL ANSI B16.9, BUTT-WELDED.	SAME AS GROUP NO 1, EXCEPT LUBRICATED PLUG SHALL BE ROCKWELL FIG. 114 OR 115, OR POWELL FIG 2202 OR 2203.
30	SAME AS GROUP NO. 11, GLASS-LINED OR STEEL ASTM A53, SCH 40, GLASS LINED	SAME AS GROUP NO. 11, GLASS-LINED OR STEEL, ANSI B16.9, SCH 40, GROOVED WITH MECH CPLG, GLASS-LINED.	SAME AS GROUP NO 26.
31	2-1/2 " AND SMALLER, STEEL, ASTM A106 OR A53, SCH 80, SEAMLESS, BLACK. 3" AND LARGER DUCTILE IRON, ANSI A21.51 (AWWA C151) OR CAST IRON ANSI A21.6 OR A21.8 MECH CPLG OR 125 PSI FLGD.	2-½" AND SMALLER, FORGED STEEL, ANSI B16.11, SOCKET WELDED OR THREADED, BLACK, 2000 PSI, OR STEEL, ANSI B16.9, BUTT-WELDED SCH 80. 3" AND LARGER, DUCTILE IRON OR CAST IRON, ANSI A21.10 OR AWWA C110, MECH COUPLING OR 125 PSI FLGD.	CAST IRON, LUBRICATED PLUG, ROCKWELL FIG 142 OR 143, OR POWEL FIG 2200 OR 2201.
32	POLYVINYL CHLORIDE GRAVITY SEWER PIPE, ASTM F679.	POLYVINYL CHLORIDE, ASTM F679 BELL AND/OR SPIGOT.	--------
33	POLYVINYL CHLORIDE, AWWA C-900.	POLYVINYL CHLORIDE, AWWA C-110, CLASS 250.	--------

LIST OF SAMPLE LINES

PIPE DESIGNATION	SAMPLE POINT

TYPICAL PIPE DESIGNATION:

2" UW (24)

MATERIAL GROUP NUMBER (SEE NOTE 12)

PIPE DIAMETER — FLUID ABBREVIATION

NOTES:

GENERAL NOTE
ALTHOUGH SEVERAL PIPING MATERIALS ARE SHOWN THAT MAY BE USED FOR A GIVEN FUNCTION, ONLY THE CALLED PIPING MATERIAL SHOWN ON THE CONSTRUCTION DRAWINGS AND SPECIFICATIONS SHALL BE USED. THE CONTRACTOR DOES NOT HAVE THE OPTION TO USE A DIFFERENT MATERIAL.

NOTE 1
PROPRIETARY NAMES HAVE BEEN QUOTED FOR IDENTIFICATION PURPOSES ONLY. SUBSTITUTIONS WILL BE PERMITTED SUBJECT TO PROVISIONS OF THE SPECIFICATIONS.

NOTE 2
LEAKAGE ALLOWANCE IS AS FOLLOWS:

(A) PIPES SO DESIGNATED SHALL SHOW ZERO LEAKAGE.
(B) PIPES SO DESIGNATED SHALL SHOW ZERO LEAKAGE FOR UNBURIED PIPE AND NOT MORE THAN 0.02 GALLON PER HOUR PER INCH DIAMETER PER 100 FEET OF BURIED PIPE.
(C) PIPES SO DESIGNATED SHALL NOT SHOW A LEAKAGE OF MORE THAN 0.15 GALLON PER HOUR PER INCH OF DIAMETER PER 100 FEET OF PIPE
(D) PIPES SO DESIGNATED SHALL NOT SHOW A LOSS OF PRESSURE OF MORE THAN 5 PERCENT
(E) PIPE SO DESIGNATED SHALL NOT SHOW A LOSS OF VACUUM OF MORE THAN 4 INCHES MERCURY COLUMN

NOTE 3
FOR FIELD TEST PROCEDURES AND ADDITIONAL TEST REQUIREMENTS, SEE PIPING SECTION OF SPECIFICATIONS.

NOTE 4
ANY DEVIATION FROM THE PIPING MATERIALS OR FIELD TEST REQUIREMENTS SHOWN WILL BE NOTED IN THE SPECIFICATION OR ON THE DRAWINGS.

NOTE 5
PIPING GROUP NUMBER SHOWN THUS * SHALL BE INSULATED. SEE PIPING SECTION OF SPECIFICATIONS FOR INSULATING MATERIALS.

NOTE 6
STATIC WATER TEST WITH SURFACE 5 FEET ABOVE HIGH POINT OF PIPE.

NOTE 7
INSPECTION AND TESTING SHALL BE IN ACCORDANCE WITH APPLICABLE PLUMBING CODE AND SPECIFICATIONS.

NOTE 8
NO APPARENT LEAKS UNDER NORMAL OPERATING CONDITIONS.

NOTE 9
INSPECTION AND TESTING SHALL BE IN ACCORDANCE WITH APPLICABLE NATIONAL FIRE PROTECTION ASSOCIATION STANDARDS.

NOTE 10
PIPING MATERIALS SHALL BE IN ACCORDANCE WITH NATIONAL FIRE PROTECTION ASSOCIATION STANDARDS.

NOTE 11
FOR VALVES 8" AND LARGER SEE VALVE SCH FOR SPECIAL VALVES SEE SPECIFICATIONS.

NOTE 12
CHANGE IN PIPING MATERIAL GROUP NUMBER IS INDICATED THUS: ——◆

NOTE 13
FOR PIPE LINING AND COATING, SEE SPECIFICATIONS.

NOTE 14
EXPOSED PIPING SHALL BE PAINTED IN ACCORDANCE WITH SPECIFICATIONS. COLORS TO BE SELECTED BY ENGINEER.

NOTE 15
PIPING MATERIAL SHALL BE NON-ABRASIVE FLEXIBLE RUBBER HOSE AND QUICK CONNECTION CPLG WITH GROUP NO 1 AT EQUIPMENT.

NOTE 16
VALVES 2½" AND SMALLER MAY HAVE SCREWED ENDS. VALVES 3" AND LARGER SHALL HAVE FLGD ENDS UNLESS OTHERWISE INDICATED.

REGISTERED PROFESSIONAL ENGINEER — JOHN ARTHUR BERGEN — NO. C31069 — Exp. 3-31-04 — CIVIL — STATE OF CALIFORNIA

REV	DATE	BY	DESCRIPTION

SCALE: NO SCALE

WARNING: 0 1/2 1 — IF THIS BAR DOES NOT MEASURE 1" THEN DRAWING IS NOT TO SCALE

DESIGNED L. WONG
DRAWN E. WISNIEWSKI
CHECKED J. BERGEN

SUBMITTED BY
JOHN A. BERGEN — C31069 LICENSE NO. — 2/16/2004 DATE
STEVE J. HYLAND — C23892 LICENSE NO. — 2/16/2004 DATE

DIGALERT — DIAL TOLL FREE 1-800-642-2444 — AT LEAST TWO DAYS BEFORE YOU DIG — UNDERGROUND SERVICE ALERT OF NORTHERN CALIFORNIA

LOS OSOS COMMUNITY SERVICES DISTRICT

MWH — Walnut Creek, California

LOS OSOS WASTEWATER PROJECT
GENERAL
PIPE SCHEDULE

SHEET BC-G-011

Job No: 1481166 File: N:\Projects\los_osos\Collect_Sys\BC\gen\BC-G-011.dgn Plot Date: 09-FEB-2004 14:36

STRUCTURE OR FACILITY

EXISTING STRUCTURE OR FACILITY

FUTURE STRUCTURE OF FACILITY

EARTH

GRAVEL/DRAINROCK/AGGREGATE BASE (IN SECTION)

ASPHALT CEMENT PAVING

CONCRETE PAVING

GRAVEL PAVING

EARTH (IN SECTION)

COMPACTED EARTH (IN SECTION)

CONCRETE CURB

CONCRETE CURB AND GUTTER

DROP INLET CATCH BASIN

CURBSIDE DROP INLET CATCH BASIN WITH LOCAL DEPRESSION

SIDE INLET CATCH BASIN WITH LOCAL DEPRESSION

CONCRETE WALK

DRIVEWAY / ACCESS RAMP

PIPE IN SECTION

CL OR ℄ — CENTERLINE

PL OR ℙ — PROPERTY LINE

R/W — RIGHT-OF-WAY LINE

ESMT — EASEMENT LINE

TEMP ESMT — TEMPORARY EASEMENT LINE

FOR GRAVITY PLAN AND PROFILE ONLY

NEW SEWER 24" AND GREATER

MH — NEW SANITARY SEWER MANHOLE

EXISTING SANITARY SEWER MANHOLE

6"SD — EXISTING STORM DRAIN AND MH

TEL — EXISTING BURIED TELEPHONE

6"G — EXISTING GAS LINE W/VALVE

8"W — EXISTING WATER LINE W/VALVE AND FIRE-HYDRANT

6"SS — PLUG & ABANDON EXIST SANITARY SEWER, SEWER AND MANHOLE SHALL BE FILLED WITH GROUT

RIGHT OF WAY

STATE OF CALIFORNIA RIGHT OF WAY ACCESS CONTROLLED AREA

FO — EXIST FIBER OPTIC

SD — EXIST STORM DRAIN

SS — EXIST SANITARY SEWER

E — EXIST BURIED ELECTRICAL

TEL — EXIST TELEPHONE

℄ — CENTER LINE

G — EXIST GAS

TS — EXIST TRAFFIC SIGNAL

FENCE (NEW)

FENCE (EXISTING)

WATER COURSE

TRAIL OF DIRT ROAD

125 — MAJOR CONTOUR LINE (NEW)

125 — MAJOR CONTOUR LINE (NEW)

125 — MAJOR CONTOUR LINE (EXISTING)

VEGETATION

PP — POWER POLE

HORIZONTAL/VERTICAL CONTROL

BENCH MARK

COORDINATE TICK MARK

STREET LIGHT W/POLE

TRAFFIC SIGNAL W/POLE

B-8 — SOIL BORING

POTHOLE LOCATION

FOR DISPOSAL MAIN PLAN AND PROFILE ONLY

DM — DISPOSAL MAIN

HM — HARVEST MAIN

SS — SANITARY SEWER

FM — FORCE MAIN

AVAR OR AR IN PLAN

AVAR OR AR IN PROFILE

BLOW-OFF IN PLAN

BLOW-OFF IN PROFILE

DISPOSAL WELL

FOR PUMP STATION ONLY

PIPELINE (CIVIL SHEETS) 6" DIA AND LARGER

PIPELINE (CIVIL SHEETS) SMALLER THAN 6" DIA

ISOLATION VAULT & MAJOR BLOWOFF VAULT (IN PLAN)

CATHODIC TEST STATION (IN PROFILE)

CATHODIC TEST STATION (IN PLAN)
TYPES:
CTS — CORROSION TEST STATION
CATS — CASING TEST STATION
IJTS — INSULATING JOINT TEST STATION
FPTS — FOREIGN PIPELINE TEST STATION
CSTS — CURRENT SPAN TEST STATION

FH — FIRE HYDRANT

PCOTG — PRESSURE CLEANOUT TO GRADE

COTG — CLEANOUT TO GRADE

REDUCER OR INCREASER (PROVIDE SIZE)

ETS — ELECTROLYSIS TEST STATION

CHANGE IN PIPING MATERIAL

BACKWATER VALVE

BACKFLOW PREVENTER

GATE VALVE, BURIED WITH VALVE BOX

BUTTERFLY VALVE, BURIED WITH VALVE BOX

ECCENTRIC PLUG VALVE, BURIED WITH VALVE BOX

LUBRICATED PLUG VALVE, BURIED WITH VALVE BOX

GATE VALVE

BUTTERFLY VALVE

CAPPED END OR PLUGGED END

BLIND FLANGE

REDUCER OR INCREASER

FLOOR DRAIN

DRAIN TRAP

2"_UW_(2) — PIPE CALLOUT (SEE PIPING SCHEDULE)

ME-2 — EQUIPMENT NUMBER (SEE EQUIPMENT SCHEDULE)

ECCENTRIC PLUG VALVE

BALL VALVE

CHECK VALVE

M P — MOTOR OPERATOR FOR VALVES (M = ELECTRIC, P = PNEUMATIC)

S — SOLENOID VALVE

PRESSURE RELIEF VALVE

HOSE BIBB (H/B)

CENTRIFUGAL OR TURBINE PUMP OR FAN

METERING PUMP

PROGRESSING CAVITY, POSITIVE DISPLACEMENT PUMP

AIR VACUUM AND AIR RELEASE ASSEMBLY

G — PRESSURE GAUGE

G — PRESSURE GAUGE WITH DIAPHRAGM SEAL

S — PRESSURE SWITCH

S — PRESSURE SWITCH WITH DIAPHRAGM SEAL

DRAIN

M M — MAGNETIC METER

ROTAMETER

SECTION AND DETAIL IDENTIFICATION

SECTION IDENTIFICATION

SECTION LETTER

A / 3S-5 — SHEET ON WHICH SECTION IS SHOWN

SECTION A / 3S-1 — SHEET ON WHICH SECTION IS CUT

DETAIL IDENTIFICATION

DETAIL NUMBER

3 / 2M-3 — SHEET ON WHICH DETAIL IS SHOWN

DETAIL 3 / 2M-2 — SHEET ON WHICH DETAIL IS CALLED-OUT

STANDARD DETAIL IDENTIFICATION

DETAIL NUMBER

C-302

DETAIL C-302

STANDARD DETAILS ARE LOCATED ON DISCIPLINE GENERAL SHEETS, IN NUMERICAL ORDER

ELEVATION IDENTIFICATION

ELEVATION NUMBER

1 / 1A-3 — SHEET ON WHICH ELEVATION IS SHOWN

ELEVATION 1 / 1A-1 — SHEET ON WHICH ELEVATION IS CALLED-OUT

PIPING IDENTIFICATION

SEE PIPING SCHEDULE

MATERIAL GROUP NUMBER

12" RAS (27)

PIPE DIAMETER — FLUID ABBREVIATION

EQUIPMENT IDENTIFICATION

SEE EQUIPMENT SCHEDULE/SPECIFICATIONS

EQUIPMENT DESIGNATOR — EQUIPMENT NUMBER

12MAU-05

AREA NUMBER

MISCELLANEOUS

4-12 — ROOM NUMBER

2-16 — DOOR NUMBER

1-8 — WINDOW NUMBER

13 — ACCESSORY NUMBER

4 — WALL TYPE NUMBER

DISCIPLINE SPECIFIC SYMBOLS ARE SHOWN ON THE DISCIPLINEGENERAL DRAWINGS.

FOR WELDING SYMBOLS USE AMERICAN WELDING SOCIETY STANDARD SYMBOLS.

REGISTERED PROFESSIONAL ENGINEER — JOHN ARTHUR BERGER — NO. C31069 — Exp. 3-31-04 — CIVIL — STATE OF CALIFORNIA

REV	DATE	BY	DESCRIPTION

SCALE: NO SCALE

WARNING: 0 1/2 1 — IF THIS BAR DOES NOT MEASURE 1" THEN DRAWING IS NOT TO SCALE

DESIGNED L. WONG
DRAWN E. WISNIEWSKI
CHECKED J. BERGEN

SUBMITTED BY
JOHN A. BERGEN — C31069 LICENSE NO. — 2/16/2004 DATE
STEVE J. HYLAND — C23892 LICENSE NO. — 2/16/2004 DATE

DIGALERT — DIAL TOLL FREE 1-800-642-2444 AT LEAST TWO DAYS BEFORE YOU DIG — UNDERGROUND SERVICE ALERT OF NORTHERN CALIFORNIA

LOS OSOS COMMUNITY SERVICES DISTRICT

MWH Walnut Creek, California

LOS OSOS WASTEWATER PROJECT
GENERAL
SYMBOLS

SHEET BC-G-012

Job No: 1481166 File: N:\Projects\los_osos\Collect_Sys\BC\gen\BC-G-012.dgn Plot Date: 09-FEB-2004 14:37

A	AIR
A/C	AIR CONDITIONING
AASHTO	AMERICAN ASSOCIATION OF STATE HIGHWAY AND TRANSPORTATION OFFICIALS
AB	ANCHOR BOLT
ABAN	ABANDON
ABAND	ABANDONED
ABBR	ABBREVIATION
ABS	ABSOLUTE TEMPERATURE
AC	ACTIVATED CARBON / ASPHALTIC CONCRETE / ALTERNATING CURRENT
ACI	AMERICAN CONCRETE INTERNATIONAL
ACOUS	ACOUSTIC / ACOUSTICAL
ACP	ASBESTOS CEMENT PIPE / ASPHALTIC CONCRETE PAVEMENT
ADD	ADDITIONAL
ADH	ADHESIVE
ADJ	ADJUSTABLE
AER	AERATION
AFF	ABOVE FINISHED FLOOR
AISC	AMERICAN INSTITUTE OF STEEL CONSTRUCTION
ALT	ALTERNATE
ALUM	ALUMINUM
AMB	AMBIENT
ANSI	AMERICAN NATIONAL STANDARDS INSTITUTE
API	AMERICAN PETROLEUM INSTITUTE
APPD	APPROVED
APPROX	APPROXIMATE
APPURTS	APPURTENANCES
ARCH	ARCHITECTURE
AREA	AMERICAN RAILWAY ENGINEERING ASSOCIATION
ASME	AMERICAN SOCIETY OF MECHANICAL ENGINEERS
ASPH	ASPHALT
ASTM	AMERICAN SOCIETY FOR TESTING AND MATERIALS
AT	ACOUSTICAL TILE
ATM	ATMOSPHERE
AV/AR	AIR VACUUM AND AIR RELEASE VALVE
AVE	AVENUE
AWPA	AMERICAN WOOD PRESERVERS ASSOCIATION
AWS	AMERICAN WELDING SOCIETY
AWWA	AMERICAN WATER WORKS ASSOCIATION
B&S	BELL AND SPIGOT
B/W	BACK OF WALL / BACK OF WALK
BC	BEGIN CURVE/BOLT CIRCLE/BETWEEN CENTERS
BCR	BEGIN CURB RETURN
BD	BOARD
BDRY	BOUNDARY
BF	BLIND FLANGE / BOTTOM OF FOOTING
BFP	BACK FLOW PREVENTER
BHP	BRAKE HORSEPOWER
BLDG	BUILDING
BLK	BLACK / BLOCK
BLKG	BLOCKING
BLVD	BOULEVARD
BM	BEAM / BENCH MARK
BO	BLOW-OFF ASSEMBLY
BOD	BIOCHEMICAL OXYGEN DEMAND
BOP	BOTTOM OF PIPE
BOT	BOTTOM
BPV	BACK PRESSURE VALVE
BRK	BRICK / BREAK
BSMT	BASEMENT
BT	BOLT
BTU	BRITISH THERMAL UNIT
BV	BUTTERFLY VALVE
BVC	BEGIN VERTICAL CURVE
BWV	BACK WATER VALVE
C	CENTIGRADE / CHANNEL / CEMENT
C&G	CURB AND GUTTER
CAB	CABINET / CRUSHED AGGREGATE BASE
CAP	CAPACITY
CATS	CASING TEST STATION
CB	CATCH BASIN / CHALK BOARD / CURB
CBL	CONSTRUCTION BASELINE
CC	CLOSED CIRCUIT TV / CENTER TO CENTER
CD	CEILING DIFFUSER
CEM	CEMENT
CF	CURB FACE OF CUBIC FOOT
CFH	CUBIC FEET PER HOUR
CFM	CUBIC FEET PER MINUTE
CFS	CUBIC FEET PER SECOND
CHEM	CHEMICAL
CHG	CHANGE
CHKD	CHECKERED
CI	CAST IRON
CIP	CAST IRON PIPE / CAST IN PLACE
CIPP	CAST IN PLACE PIPE
CJ	CONSTRUCTION JOINT
CL	CHLORINE GAS / CHLORINATOR / CENTERLINE
CLF	CHAIN LINK FENCE
CLG	CEILING
CLOS	CLOSET
CLR	CLEAR / CLEARANCE
CM	CENTIMETER
CMB	CRUSHED MISCELLANEOUS BASE
CMC	CEMENT MORTAR-COATED
CML	CEMENT MORTAR-LINED
CML&C	CEMENT LINED AND COATED
CMP	CORRUGATED METAL PIPE
CMU	CONCRETE MASONRY UNIT
CO	CLEANOUT
COL	COLUMN
COMP	COMPRESSOR
CONC	CONCRETE / CONCENTRIC
COND	CONDENSER / CONDENSATE
CONN	CONNECTION
CONST	CONSTRUCT / CONSTRUCTION
CONT	CONTINUED / CONTINUOUS
CONTR	CONTRACTOR
COORD	COORDINATE
COR	CORNER
COTG	CLEANOUT TO GRADE
CPLG	COUPLING
CPVC	CHLORINATED POLYVINYL CHLORIDE
CS	CAUSTIC SODA / CAST STEEL
CSP	CORRUGATED STEEL PIPE
CSTS	CURRENT SPAN TEST STATION
CT	CERAMIC TILE
CTR	CENTER
CTS	CORROSION TEST STATION
CTSK	COUNTERSUNK
CU	COPPER / CUBIC
CULV	CULVERT
CV	CHECK VALVE
CY	CUBIC YARD
CYL	CYLINDER
d	PENNY
DAD	DOUBLE ACTING DOOR
DAFT	DISSOLVED AIR FLOTATION THICKENER
DB	DIRECT BURY
DBL	DOUBLE
DC	DIRECT CURRENT
DEG	DEGREEE
DET	DUCTILE IRON
DF	DRINKING FOUNTAIN / DOUGLAS FIR
DG	DOUBLE HUNG
DH	DOUBLE HUNG
DI	DUCTILE IRON
DIA	DIAMETER
DIAG	DIAGONAL
DIAPH	DIAPHRAGM
DIFF	DIFFUSER / DIFFERENTIAL
DIP	DUCTILE IRON PIPE
DIR	DIRECTION
DISCH	DISCHARGE
DISP	DISPENSER
DL	DEAD LOAD
DM	DISPOSAL MAIN
DMH	DROP MANHOLE
DN	DOWN
DO	DISSOLVED OXYGEN / DITTO
DR	DOOR / DRAIN
DS	DRENCH SHOWER AND EYE WASH
DT	DRAIN TILE
DWG	DRAWING
DWLS	DOWELS
DWY	DRIVEWAY
E	EAST
E/O	EAST OF
EA	EACH
EB	EXPANSION BOLT OR ANCHOR
EC	END CURVE
ECC	ECCENTRIC
ECR	END CURB RETURN
EF	EACH FACE / EXHAUST FAN
EFF	EFFLUENT
EG	EXISTING GRADE / EDGE OF GUTTER / EXHAUST GRILLE
EGL	ENERGY GRADE LINE
EL	ELEVATION
ELEC	ELECTRICAL / ELECTRONIC
EN	EDGE NAILING
ENCL	ENCLOSURE
ENG	ENGINE
ENGR	ENGINEER
ENT	ENTRANCE
EP	EDGE OF PAVEMENT
EPT	ETHYLENE PROPYLENE
EQ	EQUAL
EQUIP	EQUIPMENT
ESMT	EASEMENT
ETB	EMULSION TREATED BASE
ETC	ET CETERA
EVAP	EVAPORATOR
EVC	END VERTICAL CURVE
EW	EACH WAY / EYE WASH
EX	EXISTING
EXC	EXCAVATION
EXH	EXHAUST
EX-HY	EXTRA HEAVY
EXIST	EXISTING
EXP	EXPANSION
EXT	EXTERIOR / EXTENSION
EXTR	EXTRUDED
F	FAHRENHEIT / FINISH
F TO F	FACE TO FACE
F&C	FRAME AND COVER
F&I	FURNISH AND INSTALL
FAB	FABRICATE / FABRICATION
FAI	FRESH AIR INTAKE
FB	FLAT BAR / FLOOR BEAM / FIELD BOOK
FCO	FLOOR CLEANOUT
FD	FLOOR DRAIN
FDR	FEEDER
FE	FIRE EXTINGUISHER / FINAL EFFLUENT
FEM	FEMALE (PIPE THREAD)
FF	FLAT FACE / FAR FACE / FINISHED FLOOR
FG	FINISHED GRADE
FH	FIRE HYDRANT / FLAT HEAD
FIG	FIGURE
FIN	FINISHED
FIX	FIXTURE
FL	FLOWLINE / FLOOR
FLEX	FLEXIBLE
FLG	FLANGE / FLOORING
FLGD	FLANGED
FLOCC	FLOCCULATOR / FLOCCULATION
FLR	FLOOR
FLSG	FLASHING
FM	FACTORY MUTUAL (LAB. APPROVED) / FORCE MAIN
FMH	FLEXIBLE METAL HOSE
FN	FIELD NAILING
FND	FOUNDATION
FO	FIBER OPTIC
FOC	FACE OF CONCRETE / FIBER OPTIC CABLE
FOCC	FIBER OPTIC CABLE CONDUIT
FOM	FACE OF MASONRY
FOS	FACE OF STUDS
FOW	FACE OF WALL
FPC	FLEXIBLE PIPE COUPLING
FPM	FEET PER MINUTE
FPS	FEET PER SECOND
FPTS	FOREIGN PIPE TEST STATION
FR	FRAME
FRP	FIBERGLASS REINFORCED PLASTIC
FS	FINISHED SURFACE / FARSIDE / FLOOR SINK / FORGED STEEL / FROTH SPRAY
FT	FEET / FOOT
FTG	FOOTING
FUR	FURRING
FUT	FUTURE
FV	FIELD VERIFY
FWD	FORWARD
G	GAS
GA	GAGE / GAUGE
GAL	GALLON
GALV	GALVANIZED
GANC	GUY ANCHOR
GB	GRADE BREAK
GEN	GENERAL / GENERATOR
GFA	GROOVED FLANGE ADAPTER
GI	GALVANIZED IRON
GIP	GALVANIZED IRON PIPE
GL	GLASS / GROUND LINE / GRADE LINE
GLB	GLUE LAMINATED BEAM
GLV	GLOBE VALVE
GM	GAS METER
GP	GUY POLE
GPD	GALLONS PER DAY
GPH	GALLONS PER HOUR
GPM	GALLONS PER MINUTE
GR	GRADE
GRD	GRADE / GROUND
GRTG	GRATING
GSP	GALVANIZED STEEL PIPE
GV	GATE VALVE
GYP	GYPSUM
H	HIGH / HEIGHT
H&V	HEATING AND VENTILATING
H/B	HOSE BIBB
HC	HOUSE CONNECTION
HDR	HEADER
HDW	HARDWARE
HDWL	HEADWALL
HEX	HEXAGONAL
Hg	MERCURY
HGL	HYDRAULIC GRADE LINE
HGR	MANGER
HM	HOLLOW METAL / HARVEST MAIN
HORZ	HORIZONTAL
HP	HIGH POINT / HORSE POWER / HIGH PRESSURE
HPG	HIGH PRESSURE GAS
HR	HEAT RETURN / HOUR
HTG	HEATING
HTR	HEATER
HV	HORIZONTAL AND VERTICAL CONTROL POINT
HVAC	HEATING, VENTILATION AND AIR CONDITIONING
HW	HOT WATER / HEADWORK
HWD	HARDWOOD
HWL	HIGH WATER LEVEL
HWO	HANDWHEEL OPERATED
HYD	HYDRAULIC / HYDRANT
I&O	INSIDE AND OUTSIDE
ID	INSIDE DIAMETER
IF	INSIDE FACE
IJTS	INSULATING JOINT TEST STATION
IN	INCH
INCL	INCLUDE / INCLUDING
INFL	INFLUENT
INSL	INSULATION
INSP	INSPECTION
INST	INSTRUMENT
INT	INTERIOR
INV	INVERT
IP	IRON PIPE
IPS	IRON PIPE SIZE
IRRG	IRRIGATION
JAN	JANITOR
JC	JUNCTION CHAMBER
JCT	JUNCTION
JS	JUNCTION STRUCTURE
JSTS	JOISTS
JT	JOINT
K	KELVIN / KILO / KARAT
KG	KILOGRAM
KM	KILOMETER
KV	KILOVOLT
KW	KILOWATT
KWH	KILOWATT HOUR
L	LITER / LENGTH / ANGLE
LAB	LABORATORY
LAM	LAMINATED
LAT	LATERAL
LAV	LAVATORY
LB	POUND
LCP	LOCAL CONTROL PANEL
LD	LOCAL DEPRESSION
LDG	LANDING
LEV	LEVEL
LF	LINEAR FOOT
LG	LENGTH / LONG
LH	LAMP HOLE / LEFT HAND
LL	LIVE LOAD
LLH	LONG LEG HORIZONTAL
LLV	LONG LEG VERTICAL
LOC	LOCATION
LOCSD	LOS OSOS COMMUNITY SERVICES DISTRICT
LOL	LAYOUT LINE
LONG	LONGITUDINAL
LP	LOW POINT / LOW PRESSURE / LAMP POST
LT	LEFT / LIGHT
LTS	LIME TREATED SOIL
LW	LOW WATER
LWL	LOW WATER LEVEL
LWR	LOWER
M	METER / MALE (PIPE THREAD)
MACH	MACHINE
MAG	MAGNETIC
MAINT	MAINTENANCE
MAN	MANUAL
MAS	MASONRY
MATL	MATERIAL
MAX	MAXIMUM
MB	MAIL BOX / MACHINE BOLT
MCC	MOTOR CONTROL CENTER
MCR	MIDDLE OF CURB RETURN
MEAS	MEASURE
MECH	MECHANICAL
MED	MEDIUM
MEMB	MEMBER
MFRD	MANUFACTURED
MGD	MILLION GALLONS PER DAY
MH	MANHOLE
MHT	MEAN HIGH TIDE
MHW	MEAN HIGH WATER
MI	MALLEABLE IRON / MILE
MICRON	1/1,000,000 METER
MIL	MILITARY / 1/1,000 TH INCH
MIN	MINIMUM / MINUTE
MIR	MIRROR
MISC	MISCELLANEOUS
MK	MARK
MLW	MEAN LOW WATER
mm	MILLIMETER
MO	MOTOR OPERATED / MASONRY OPENING
MOD	MODEL
MON	MONUMENT
MOR	MORTAR
MS	MOP SINK
MSL	MEAN SEA LEVEL
MTC	MECHANICAL-TYPE COUPLING
MTD	MOUNTED
MTG	MOUNTING
MTL	METAL
MTR	MOTOR
N	NORTH
NaOCL	SODIUM HYPOCHLORITE
NaOH	SODIUM HYDROXIDE (CAUSTIC SODA)
NBS	NATIONAL BUREAU OF STANDARDS
NC	NORMALLY CLOSED
NEC	NATIONAL ELECTRICAL CODE
NEMA	NATIONAL ELECTRICAL MANUFACTURES ASSOCIATION
NF	NEAR FACE
NFPA	NATIONAL FIRE PROTECTION ASSOCIATION
NG	NATURAL GRADE / NATURAL GAS
NIC	NOT IN CONTRACT
NO	NUMBER / NORMALLY OPEN
NOM	NOMINAL
NPS	NOMINAL PIPE SIZE
NPT	NATIONAL PIPE THREAD
NRCP	NONREINFORCED CONCRETE PIPE
NRS	NON-RISING STEM
NS	NEAR SIDE
NTS	NOT TO SCALE
OBJ	OBJECT
OC	ON CENTER / OVER-CROSSING
OD	OUTSIDE DIAMETER / OVERALL DIMENSION
OE	OUTER EDGE
OF	OVERFLOW / OUTSIDE FACE
OFD	OVERFLOW DRAIN
OFF	OFFICE
OH	OVER HEAD
OPER	OPERATOR / OPERATING
OPNG	OPENING
OPP	OPPOSITE
ORIG	ORIGINAL
OS&Y	OUTSIDE SCREW AND YOKE
OSA	OUTSIDE AIR
OSHA	OCCUPATIONAL SAFETY AND HEALTH ADMINISTRATION
OWG	OIL, WATER, GAS
OZ	OUNCE
P	POLE / PAGE / PIPE
P/S	POLE AND SHELF
PA	PLANTING AREA
PART	PARTITION
PAVMT	PAVEMENT
PB	POLYBUTYLENE / PULL BOX
PC	POINT OF CURVATURE / PRIMARY CLARIFIER / PORTLAND CEMENT
PCC	PORTLAND CEMENT CONCRETE / POINT OF COMPOUND CURVE
PCOTG	PRESSURE CLEANOUT TO GRADE
PCVC	POINT OF COMPOUND VERTICAL CURVE
PE	POLYETHYLENE / PLANT EFFLUENT / POLYELECTROLYTE POLYMER
PG	PRESSURE GAGE
pH	HYDROGEN ION CONCENTRATION
PI	PLANT INFLUENT / POINT OF INTERSECTION
PK	PARKING
PL	PLATE / PROPERTY LINE / PLACE
PLAS	PLASTER / PLASTIC
PLT	PLANT
PLWD	PLYWOOD
PM	PRESSED METAL
PNEU	PNEUMATIC
PNL	PANEL
POB	POINT OF BEGINNING
POC	POINT OF CONNECTION
POT	POINT OF TANGENT
PP	POWER POLE / POLYPROPYLENE / PLAN AND PROFILE
PPD	POUNDS PER DAY
PPH	POUNDS PER HOUR
PPM	POUNDS PER MINUTE
PR	PAIR
PRC	POINT OF REVERSE CURVE
PRCT	PRECAST
PREFAB	PREFABRICATED
PRESS	PRESSURE
PROF	PROFILE
PRV	PRESSURE REGULATING, RELIEF OR REDUCING VALVE
PRVC	POINT OF REVERSE VERTICAL CURVE
PS	PRESSURE SWITCH
PSF	POUNDS PER SQUARE FOOT
PSI	POUNDS PER SQUARE INCH
PSIA	POUNDS PER SQUARE INCH ABSOLUTE
PSIG	POUNDS PER SQUARE INCH GAUGE
PT	POINT OF TANGENCY / PAINT / PRESSURE TREATED
PTFE	POLYTETRAFLUOROETHYLENE (TEFLON)
PV	PLUG VALVE
PVC	POLYVINYL CHLORIDE
PVDF	POLYVINYLIDENE FLUORIDE (KYNAR)
QT	QUARRY TILE
QTY	QUANTITY
QUAD	QUADRANGLE / QUADRANT
R	RADIUS / RISER / RATE OF SLOPE
R&O	ROCK AND OIL
R/W	RIGHT OF WAY
RAC	RECYCLED ASPHALT CONCRETE
RAG	RETURN AIR GRILLE
RAP	RECLAIMED ASPHALT PAVEMENT
RAS	RETURN ACTIVATED SLUDGE
RC	REINFORCED CONCRETE
RCP	REINFORCED CONCRETE PIPE
RD	ROAD / ROOF DRAIN / ROUND
RED	REDUCER / REDUCING
REF	REFERENCE / REFER / REFRIGERATOR
REG	REGULATING
REINF	REINFORCE / REINFORCED
REQD	REQUIRED
RESIL	RESILIENT
RET	RETAINING / RETURN
REV	REVISION
RF	ROOF / RAISED FOUNDATION / ROUGH FACE
RFG	ROOFING
RGE	REGISTERED GEOTECHNICAL ENGINEER
RH	REDHEAD / RIGHT HAND
RM	ROOM
RO	ROUGH OPENING
RPM	REVOLUTIONS PER MINUTE
RR	RAILROAD
RS	RISING STEM
RSL	RAW SLUDGE
RT	RIGHT
RTP	REINFORCED THERMOSETTING PLASTIC
RW	REDWOOD
RWL	RAINWATER LEADER
S	SOUTH / SCUM / SINK / SECOND / SLOPE / SAND
S/O	SOUTH OF
SA	SAMPLE
SAN	SANITARY
SBC	SOUTHWEST BELL CORPORATION
SBR	STYRENE BUTADENE (RUBBER)
SC	SPARE CHEMICAL / SECONDARY CLARIFIER
SCCP	STEEL CYLINDER CONCRETE PIPE
SCD	SCREWED
SCFM	STANDARD CUBIC FEET PER MINUTE
SCH	SCHEDULE
SD	STORM DRAIN
SDR	STANDARD THERMOPLASTIC PIPE DIMENSION RATIO
SEC	SECONDARY / SECTION
SER	SERIES
SETT	SETTING
SF	SQUARE FOOT
SH	SHOWER
SHELV	SHELVING
SHT	SHEET
SHTG	SHEATHING
SIM	SIMILAR
SL	SLUDGE
SLDG	SLIDING
SLG	SLUICE GATE
SOG	SLAB ON GRADE
SOLN	SOLUTION
SP	STATIC PRESSURE
SPEC	SPECIFICATION
SPK	SPIKE
SQ	SQUARE
SS	STAINLESS STEEL / SANITARY SEWER / SERVICE SINK
SSB	SELECT SUB-BASE
SSPWC	STANDARD SPECIFICATION FOR PUBLIC WORKS CONSTRUCTION
SSU	SECONDS SAYBOLT UNIVERSAL
ST	STREET / STATE
STA	STATION
STC	SLEEVE-TYPE COUPLING
STD	STANDARD
STK	STAKE
STL	STEEL
STM	STEAM
STR	STRAIGHT / STRUCTURAL
SUCT	SUCTION
SV	SOLENOID VALVE
SW	SIDEWALK
SWD	SIDEWALK DRAIN
SWGR	SWITCHGEAR
SWR	SIDEWALL REGISTER
SY	SQUARE YARD
SYM	SYMMETRICAL / SYMBOL
SYS	SYSTEM
T	THERMOSTAT / TREAD OF STAIR / TANGENT / TOP
T&B	TOP AND BOTTOM
T&G	TONGUE AND GROOVE
TAN	TANGENT
TB	TACK BOARD
TBE	THREAD BOTH ENDS
TBM	TEMPORARY BENCH MARK
TC	TOP OF CURB
TCV	TEMPERATURE CONTROL VALVE
TEL	TELEPHONE
TEMP	TEMPERATURE / TEMPORARY
TF	TOP OF FOOTING
TH	TEST HOLE
THK	THICK / THICKNESS
THR	THRESHOLD
THR'D	THREADED
TK	TANK / TACK
TL	TRAVERSE LINE
TOC	TOP OF CONCRETE
TOE	THREAD ONE END
TOL	TOILET
TOM	TOP OF MASONRY
TOP	TOP OF PIPE
TOPO	TOPOGRAPHIC
TOS	TOP OF STEEL
TOW	TOP OF WALL
TP	TELEPHONE POLE
TR	TRACT
TRANS	TRANSMITTER / TRANSITION /TRANSMISSION
TS	TRAFFIC SIGNAL
TSB	TOP SET BASE
TSC	TRAFFIC SIGNAL CONDUIT
TV	THERMOSTATIC VALVE / TELEVISION
TW	THERMOMETER WELL /TRAVELED WAY
TYP	TYPICAL
UB	UNION BONNET
UBC	UNIFORM BUILDING CODE
UC	UNDER-CROSSING
UG	UNDERGROUND
UGC	UNDERGROUND CONDUIT
UH	UNIT HEATER
UL	UNDERWRITERS LABORATORIES
UNO	UNLESS NOTED OTHERWISE
UOI	UNLESS OTHERWISE INDICATED
UR	URINAL
USA	UNDERGROUND SERVICE ALERT
USGS	UNITED STATES GEOLOGICAL SURVEY
V	VALVE / VERTICAL / VENT / VOLT / VOLUME
VAC	VACUUM
VAR	VARIES / VARIABLE
VB	VALVE BOX
VC	VERTICAL CURVE
VCP	VITRIFIED CLAY PIPE
VERT	VERTICAL
VOL	VOLUME
VPI	VERTICAL POINT OF INTERSECTION
VTC	VENT TO CEILING
VTR	VENT THROUGH ROOF
VWC	VINYL WALL COVERING
VWM	VERIFY WITH MANUFACTURE
W	WEST / WASTE / WIDTH / WIDE FLANGE
W/	WITH
W/O	WEST OF / WITHOUT
WC	WATER COLUMN / WATER CLOSET
WCO	WALL CLEANOUT
WD	WOOD
WDW	WINDOW
WH	WATER HEATER
WI	WROUGHT IRON
WM	WATER METER
WOG	WATER, OIL, OR GAS
WP	WATER PROOFING / WORKING PRESSURE / WORK POINT
WPJ	WEAKEN PLANE JOINT
WS	WATER SURFACE
WSTP	WATER STOP
WT	WEIGHT
WWF	WELDED WIRE FABRIC
WWP	WATER WORKING PRESSURE
WWTF	WASTEWATER TREATMENT FACILITY
XCONN	CROSS CONNECTION
XS	EXTRA STRONG
XSEC	CROSS SECTION
XXS	DOUBLE EXTRA STRONG
YD	YARD
YR	YEAR
Z	ZERO / ZONE
ZN	ZINC
#	POUND
&	AND
@	AT

FOR ADDITIONAL ABBREVIATIONS SEE:

PIPING - SHEET *
ELECTRICAL - SHEET *
INSTRUMENTATION - SHEET *

OTHER ABBREVIATIONS CONFORM TO ANSI STANDARD ABBREVIATIONS Z32.2.3

REGISTERED PROFESSIONAL ENGINEER JOHN ARTHUR BERGEN NO. C31069 Exp. 3-31-04 CIVIL STATE OF CALIFORNIA

REV	DATE	BY	DESCRIPTION

SCALE: NO SCALE

WARNING: 0 1/2 1 — IF THIS BAR DOES NOT MEASURE 1" THEN DRAWING IS NOT TO SCALE

DESIGNED L. WONG
DRAWN E. WISNIEWSKI
CHECKED J. BERGEN

SUBMITTED BY
JOHN A. BERGEN — C31069 — LICENSE NO. — 2/16/2004 DATE
STEVE J. HYLAND — C23892 — LICENSE NO. — 2/16/2004 DATE

DIGALERT — DIAL TOLL FREE 1-800-642-2444 AT LEAST TWO DAYS BEFORE YOU DIG — UNDERGROUND SERVICE ALERT OF NORTHERN CALIFORNIA

LOS OSOS COMMUNITY SERVICES DISTRICT

MWH Walnut Creek, California

LOS OSOS WASTEWATER PROJECT
GENERAL
ABBREVIATIONS

SHEET BC-G-013

Job No: 1481166 File: N:\Projects\los_osos\Collect_Sys\BC\gen\BC-G-013.dgn Plot Date: 09-FEB-2004 14:37

GENERAL NOTES:

1. TRAFFIC CONTROL PLANS DO NOT SHOW ALL WORK REQUIRED TO BE COMPLETED. WORK NOT NECESSARY FOR TRAFFIC CONTROL MAY BE COMPLETED AT ANY TIME AND IS NOT SHOWN.
2. CONTRACTOR SHALL INSTALL AND MAINTAIN THE TRAFFIC CONTROL DEVICES AS SHOWN HEREIN, AS WELL AS ANY ADDITIONAL TRAFFIC CONTROL DEVICES AS MAY BE REQUIRED TO ENSURE THE SAFE MOVEMENT OF TRAFFIC AND PEDESTRIANS THROUGH OR AROUND THE CONSTRUCTION AREA AND TO PROVIDE MAXIUM PROTECTION AND SAFETY TO CONSTRUCTION WORKERS.
3. THE ENGINEER RESERVES THE RIGHT TO OBSERVE THESE TRAFFIC CONTROL PLANS IN USE AND TO MAKE NECESSARY CHANGES AS FIELD CONDITIONS WARRANT. ANY CHANGES SHALL SUPERSEDE THESE PLANS AND SHALL BE PROVIDED AT NO ADDITIONAL COST/TIME TO THE OWNER.
4. ALL TEMPORARY TRAFFIC CONTROL DEVICES SHALL BE REMOVED FOLLOWING COMPLETION OF EACH CONSTRUCTION PHASE.
5. CONTRACTOR SHALL COVER ALL EXISTING SPEED LIMIT SIGNS AND REPLACE WITH C17 (25 MPH ROAD WORK SPEED LIMIT SIGN) DURING CONSTRUCTION HOURS. C17 SIGNS SHALL BE VISIBLE AND LEFT IN PLACE ONLY WHEN WORKERS ARE PRESENT.
6. CONTRACTOR SHALL REPLACE OR REPAIR ALL DAMAGED STRIPING WITH TEMPORARY STRIPING OR RAISED PAVEMENT MARKERS AT THE END OF EACH WORKING DAY.
7. CONTRACTOR SHALL COVER OR REMOVE ALL CONFLICTING SIGNS.
8. ALL SIGNS, STRIPING, PAVEMENT MARKINGS, CHANNELIZERS, BARRICADES, TEMPORARY RAILING, TEMPORARY CRASH CUSHION AND OTHER TRAFFIC CONTROL DEVICES SHALL BE IN ACCORDANCE WITH THE LATEST CALTRANS STANDARD PLANS AND STANDARD SPECIFICATIONS, AND CALTRANS DRAWINGS AND SPECIFICATIONS.
9. ALL EXISTING SIGNING NOT IN CONFORMANCE WITH THE DETOUR PLANS SHALL BE COVERED FOR THE DURATION OF THE DETOUR. ALL EXISTING STOP SIGNS SHALL BE RELOCATED AS REQUIRED TO BE VISIBLE FROM ALL RELOCATED TRAFFIC LANES.
10. ALL EXISTING FACILITIES, INCLUDING SIGNING, STRIPING, SIGNS, MARKING, AND MARKERS NOT INDICATED TO BE REMOVED SHALL BE RESTORED TO THE ORIGINAL CONDITION AND/OR LOCATION AT THE END OF THE CONSTRUCTION PERIOD.
11. ALL TEMPORARY FACILITIES CONSTRUCTED FOR THE PURPOSES OF EACH DETOUR SHALL BE REMOVED AT THE COMPLETION OF THE CONSTRUCTION PERIOD.
12. CONSTRUCTION TRAFFIC CONTROL SHALL CONFORM TO THE LATEST CALTRANS MANUAL OF TRAFFIC CONTROLS.
13. ALL STRIPING, MARKINGS, SIGNINGS, BARRICADES, AND MARKERS SHALL BE INSTALLED PER THE SSPWC, PER CALTRANS TRAFFIC MANUAL AND PER REQUIREMENTS OF THE COUNTY.
14. ALL ADVANCE WARNING SIGNS FOR DETOURS SHALL BE 48"X48" MINIMUM OR LARGER UNLESS OTHERWISE SPECIFIED.
15. ALL ADVANCE WARNING SIGNS SHALL BE REFLECTORIZED.
16. THE LOCATION OF ALL SIGNS SHOWN ARE ONLY APPROXIMATE AND THE EXACT LOCATION SHALL BE DETERMINED IN THE FIELD BY THE ENGINEER.
17. THE CONTRACTOR SHALL PROVIDE SAFE AND CONTINUOUS PASSAGE OF PEDESTRIANS AND VEHICULAR TRAFFIC AT ALL TIMES.
18. THE CONTRACTOR SHALL BE RESPONSIBLE FOR THE PROPER INSTALLATION, CONTINUAL MAINTENANCE AND THE REMOVAL OF TRAFFIC CONTROL DEVICES SPECIFIED IN THE MANUAL OF TRAFFIC CONTROL.
19. CONTRACTOR SHALL NOTIFY THE COUNTY TRAFFIC SIGNAL AND STREET LIGHTING SUPERVISOR FIVE(5) WORKING DAYS PRIOR TO ANY EXCAVATION OR CONSTRUCTION WITHIN 20 FEET OF EXISTING TRAFFIC SIGNAL DETECTOR LOOPS, CONDUITS, INTERCONNECTS, OR FIBER OPTIC CABLE.
20. ANY DAMAGE TO TRAFFIC SIGNAL DETECTOR LOOPS, CONDUITS, INTERCONNECTS, FIBER OPTIC CABLE OR COMMUNICATION CABLE SHALL BE REPAIRED IMMEDIATELY BY THE CONTRACTORS AT THEIR OWN EXPENSE. REPAIR SHALL BE A COMPLETE REINSTALLATION OF NEW CONDUCTORS FOR THE ENTIRE LENGTH FROM THE TERMINAL CABINET. IN-LINE SPLICING IS NOT ALLOWED, DELAYS IN REPAIR OF INTERCONNECT OR FIBER OPTIC CABLE WILL REQUIRE THE PAYMENT OF LIQUIDATED DAMAGES MANAGEMENT TO THE COUNTY OF SAN LUIS OBISPO, DEPARTMENT OF ENVIRONMENTAL AND PUBLIC WORKS.
21. THE CONTRACTOR SHALL BE RESPONSIBLE FOR THE WET SANDBLASTING, TURBOBLASTING OR HYDROBLASTING OF CONFLICTING STRIPING AND PAVEMENT MARKINGS INCLUDING THE CLEANUP OF ALL RESULTING DEBRIS COVERING OF EXISTING STRIPING WITH BLACK PAINT IS NOT PERMITTED.
22. ANY VEHICULAR OR PEDESTRIAN SIGNS THAT ARE OBSCURED, OR HAVE IMPAIRED OR REDUCED VISIBILITY, SHALL BE REPLACED IMMEDIATELY BY THE CONTRACTOR UPON IDENTIFICATION AND NOTIFICATION BY THE COUNTY TRAFFIC ENGINEER.
23. A 2-FOOT MINIMUM CLEARANCE MUST BE MAINTAINED BETWEEN SURFACE MOUNTED CHANNELIZERS AND THE LANE AT ALL TIMES. A MINIMUM 10-FOOT WIDE LANE IS REQUIRED ADJACENT TO CURBS, AND WHERE THERE ARE VERTICAL OBSTRUCTIONS.
24. THE CONTRACTOR SHALL INSTALL A 4-INCH SOLID WHITE RIGHT EDGE LINE (DETAIL 27B) AND A 4-INCH SOLID YELLOW LEFT EDGE LINE (DETAIL 25) OR MEDIAN ISLANDS (DETAIL 29) LOCATED AT A MINIMUM OF TWO FEET FROM THE EDGE OF A FENCE, CANOPY, OR K-RAIL TO DELINEATE THE EDGE OF TRAVELLED ROADWAY. EDGE LINES MUST ALLOW FOR A MINIMUM 10-FOOT LANE BETWEEN EDGE LINE AND LANE OR CENTER LINE.
25. CONTRACTOR SHALL PROVIDE FLAGGERS FOR SINGLE LANE TRAFFIC CONTROL AND IN OTHER CASES IF NECESSARY FOR THE SAFE PASSAGE OF TRAFFIC. THE FLAGGER SHALL USE ONLY THE APPROVED OCTAGONAL STOP/SLOW PADDLE, SHALL WEAR AN ORANGE SAFETY VEST (REFLECTORIZED FOR NIGHT WORK) AND HARD HAT, AS REQUIRED BY THE CALTRANS MANUAL, AND MUST BE PROPERLY TRAINED BY THE CONTRACTOR IN PERFORMING THE WORK SAFELY. APPROPRIATE ADVANCE SIGNS MUST ALSO BE INSTALLED, PER THE CALTRANS MANUAL AND "WATCH" MANUAL.
26. ALL TRAFFIC SIGNAL CONTROLLER, SIGNAL STANDARDS, AND OTHER ASSOCIATED SIGNAL EQUIPMENT AND PULL BOXES MUST BE ACCESSIBLE AT ALL TIMES TO THE COUNTY'S TRAFFIC SIGNAL REPAIR (TSR) PERSONNEL. ALL FENCES MUST BE INSTALLED SUCH AS TO PERMIT ACCESS BY TSR PERSONNEL AT ALL TIMES.
27. THERE SHALL BE NO STORAGE OF CONSTRUCTION MATERIALS OR EQUIPMENT OUTSIDE THE DESIGNATED WORK AREA AS INDICATED IN THE WORK SITE TRAFFIC PLANS. STORAGE OF CONSTRUCTION MATERIALS OR EQUIPMENT WITHIN THE DESIGNATED AREA SHALL BE DONE IN A MANNER NOT TO CREATE VISIBILITY OBSTRUCTIONS TO THE MOTORING PUBLIC AS DETERMINED BY THE ENGINEER.
28. WHEN WORK IS NOT IN PROGRESS, CONTRACTOR SHALL PROVIDE TEMPORARY STRIPING IN AREAS WHERE EXISTING STRIPING HAS BEEN REMOVED.
29. THE NAME AND PHONE NUMBER (24 HOUR AVAILABILITY) OF THE CONTRACTOR'S SAFETY COORDINATOR AND TRAFFIC CONTROL DEVICE MAINTENANCE MONITOR WILL BE PROVIDED TO THE AUTHORITY AND THE COUNTY'S TRAFFIC ENGINEER AND ANY CHANGE IN ASSIGNED PERSONNEL OR PHONE NUMBER WILL BE REPORTED IMMEDIATELY TO AUTHORITY AND THE COUNTY'S TRAFFIC ENGINEER.
30. ALL TEMPORARY TRAFFIC CONTROL DEVICES SHALL BE REMOVED FOLLOWING COMPLETION OF EACH CONSTRUCTION PHASE. CONTRACTOR SHALL ALSO BE RESPONSIBLE FOR THE RESTORATION OF THE STRIPING, PAVEMENT MARKINGS, AND TRAFFIC CONTROL DEVICES TO THE PERMANENT CONDITION USING CALTRANS APPROVED MATERIALS. THE COUNTY ENGINEER SHALL APPROVE THE CONTRACTORS STRIPING MARKOUT BEFORE THE FINAL INSTALLATION OF STRIPING BY THE CONTRACTOR. NOTIFY THE TRAFFIC ENGINEER TEN (10) WORKING DAYS PRIOR TO FINAL STRIPING INSTALLATION.
31. ALL DRIVEWAYS AND SIDE STREETS SHALL BE KEPT OPEN AT ALL TIMES EXCEPT WHEN CONSTRUCTION TAKES PLACE DIRECTLY IN FRONT OF DRIVEWAY OR SIDE STREET. ALL OPEN EXCAVATIONS ON PUBLIC STREETS SHALL BE BACK-FILLED OR STEEL-PLATED (TRAFFIC RATED, ANTI-SKID) FOR TRAFFIC OUTSIDE THE WORKING HOURS. TRAFFFIC SHALL BE RESTORED TO NORMAL CONDITIONS OUTSIDE THE WORKING HOURS.
32. NOTIFY LOCAL FIRE DEPARTIMENT, POLICE DEPARTMENT, AMBULANCE SERVICES AND TRASH SERVICES 48 HOURS IN ADVANCE OF CONSTRUCTION IN THE VARIOUS STAGE AREAS.
33. CONTRACTOR SHALL INSTALL C40A SIGNS (TRAFFIC FINES DOUBLED IN CONSTRUCTION AREA) ONE FOR EACH DIRECTION, AT THE BEGINNING OF EACH WORK ZONE.
34. ALSO SEE SPECIFICATIONS SECTION 01570 – TRAFFIC CONTROL FOR ADDITIONAL REQUIREMENTS.

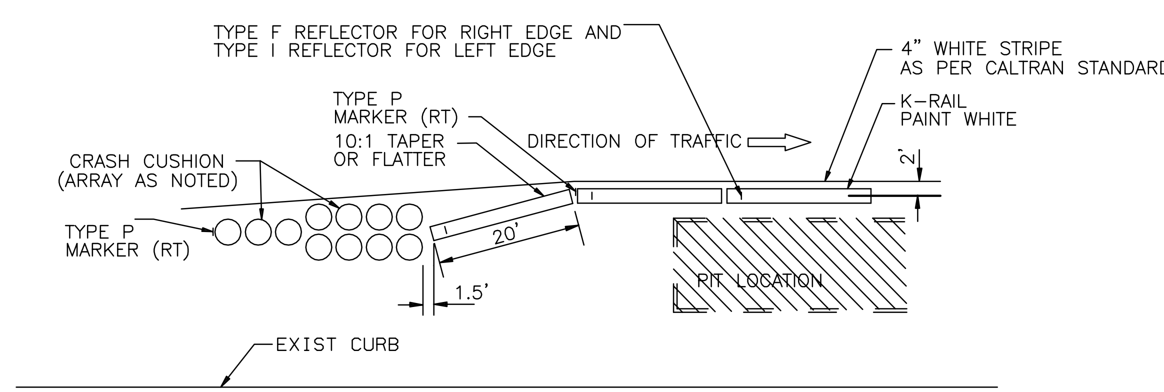

TYPICAL INSTALLATION OF CRASH CUSHIONS AND K-RAILS – TAPER 10:1 OR FLATTER

NO SCALE

LEGEND:

- CONSTRUCTION AREA
- FIRST ORDER OF WORK
- DIRT STOCKPILE
- TEMPORARY RAILING (TYPE K) WITH TRAFFIC SCREEN
- TEMPORARY CRASH CUSHION MODULES (ARRAY AS NOTED)
- ONE POST SIGN LOCATION
- SURFACE MOUNTED CHANNELIZER
- FLASHING ARROW SIGN
- BARRICADE
- TYPE P MARKER
- (NO.) CONSTRUCTION SIGN NUMBER
- (NO.) TEMPORARY PAVEMENT DELINEATION DETAIL
- DIRECTION OF TRAVEL

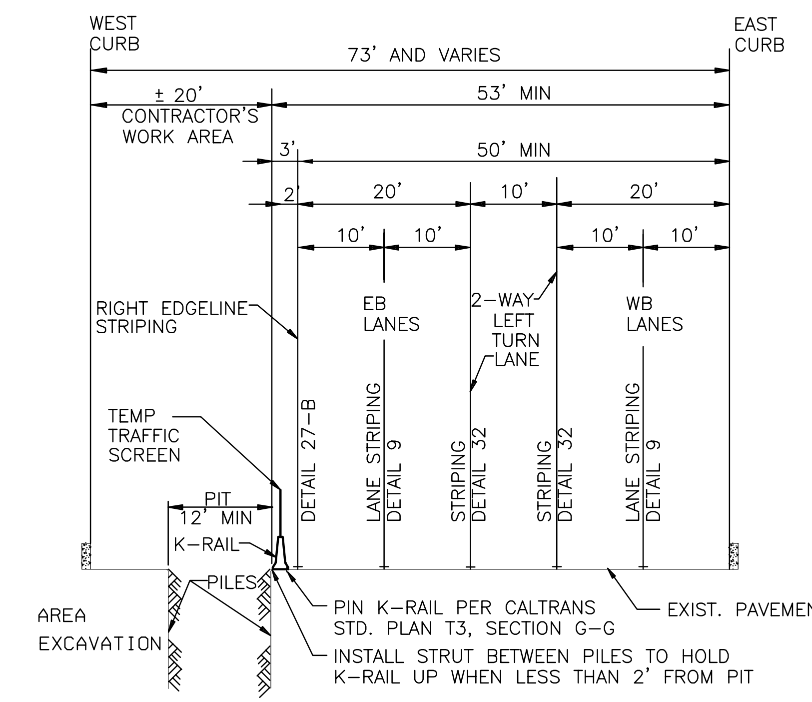

TYPICAL CONSTRUCTION SECTION

NO SCALE

REGISTERED PROFESSIONAL ENGINEER BENJAMIN C. TAI No. C62032 Exp. 9/30/05 CIVIL STATE OF CALIFORNIA

REV	DATE	BY	DESCRIPTION

SCALE: NONE

WARNING: 0 1/2 1 — IF THIS BAR DOES NOT MEASURE 1" THEN DRAWING IS NOT TO SCALE

DESIGNED BCT
DRAWN BCT
CHECKED JAB

SUBMITTED BY
JOHN A. BERGEN — C31069 LICENSE NO. — 2-16-2004 DATE
STEVEN J. HYLAND — C23892 LICENSE NO. — 2-16-2004 DATE

DIGALERT — DIAL TOLL FREE 1-800-642-2444 — AT LEAST TWO DAYS BEFORE YOU DIG — UNDERGROUND SERVICE ALERT OF NORTHERN CALIFORNIA

LOS OSOS COMMUNITY SERVICES DISTRICT

MWH Walnut Creek, California

LOS OSOS WASTEWATER PROJECT
TRAFFIC CONTROL
GENERAL NOTES, LEGEND AND ABBREVIATIONS

SHEET BC-TC-01

XREF: los_osos_tc_bdr traffic
FILE: N:\Projects\los_osos\Collect_Sys\Traffic\BC-TC-01.dwg USER: bctai Feb 07, 2004 5:12pm Job No: 1481166

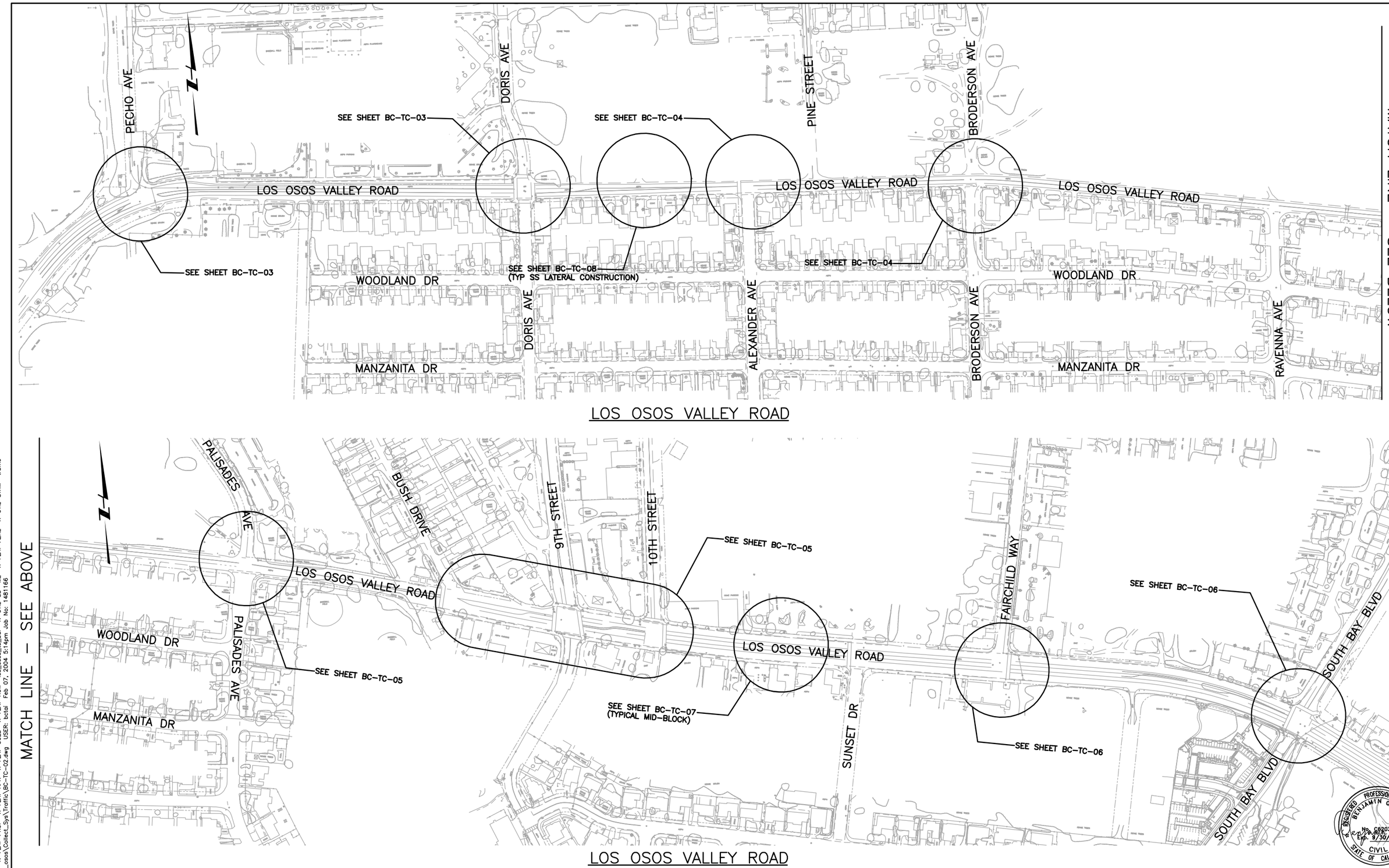

REV	DATE	BY	DESCRIPTION

SCALE: NONE

WARNING: 0 1/2 1 — IF THIS BAR DOES NOT MEASURE 1" THEN DRAWING IS NOT TO SCALE

DESIGNED BCT
DRAWN BCT
CHECKED JAB

SUBMITTED BY
JOHN A. BERGEN — C31069 — LICENSE NO. — 2-16-2004 — DATE
STEVEN J. HYLAND — C23892 — LICENSE NO. — 2-16-2004 — DATE

DIGALERT — DIAL TOLL FREE 1-800-642-2444 AT LEAST TWO DAYS BEFORE YOU DIG — UNDERGROUND SERVICE ALERT OF NORTHERN CALIFORNIA

LOS OSOS COMMUNITY SERVICES DISTRICT

MWH Walnut Creek, California

LOS OSOS WASTEWATER PROJECT

TRAFFIC CONTROL KEY PLAN

SHEET BC-TC-02

REGISTERED PROFESSIONAL ENGINEER — BENJAMIN C. TAM — No. C62032 — Exp. 9/30/05 — CIVIL — STATE OF CALIFORNIA

XREF: N-FEAT-CNBL N-FEAT-PROF X-FEAT-APN X-FEAT-GOED X-FEAT-ROW los_osos_tc_bdr N-UTL-SS ML X-FEAT-AERL X-UTL-STRM traffic
FILE: N:\Projects\los_osos\Collect_Sys\Traffic\BC-TC-02.dwg USER: bctai Feb 07, 2004 5:14pm Job No: 1481166

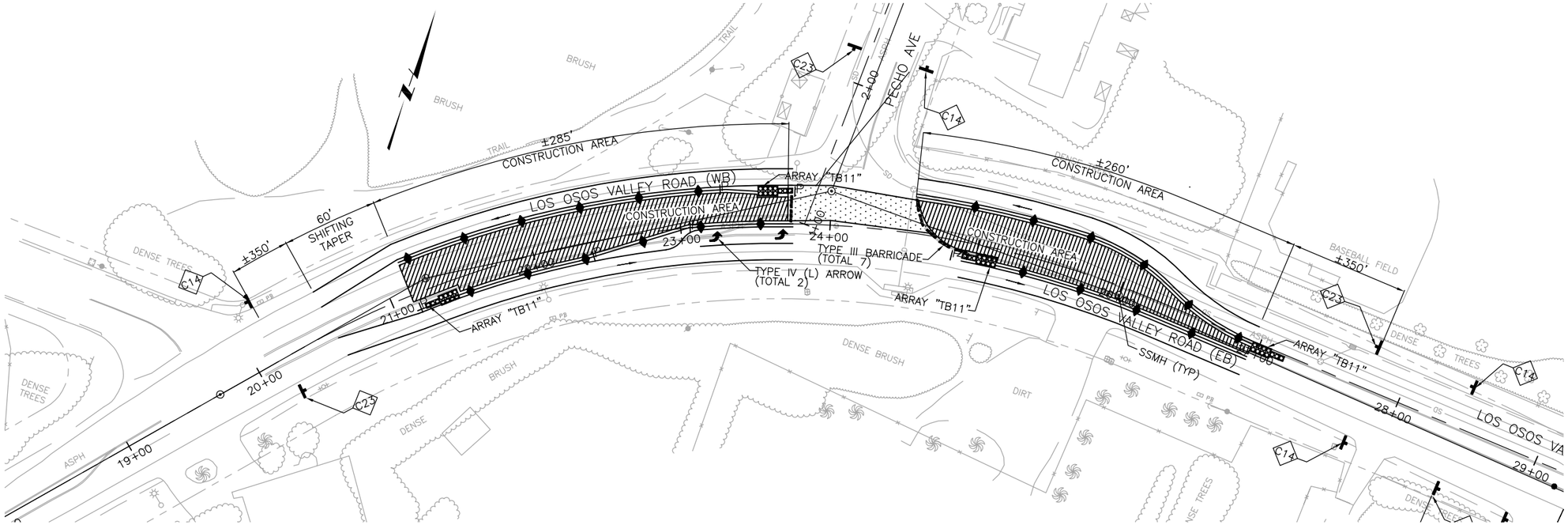

LOS OSOS VALLEY ROAD AND PECHO AVE INTERSECTION

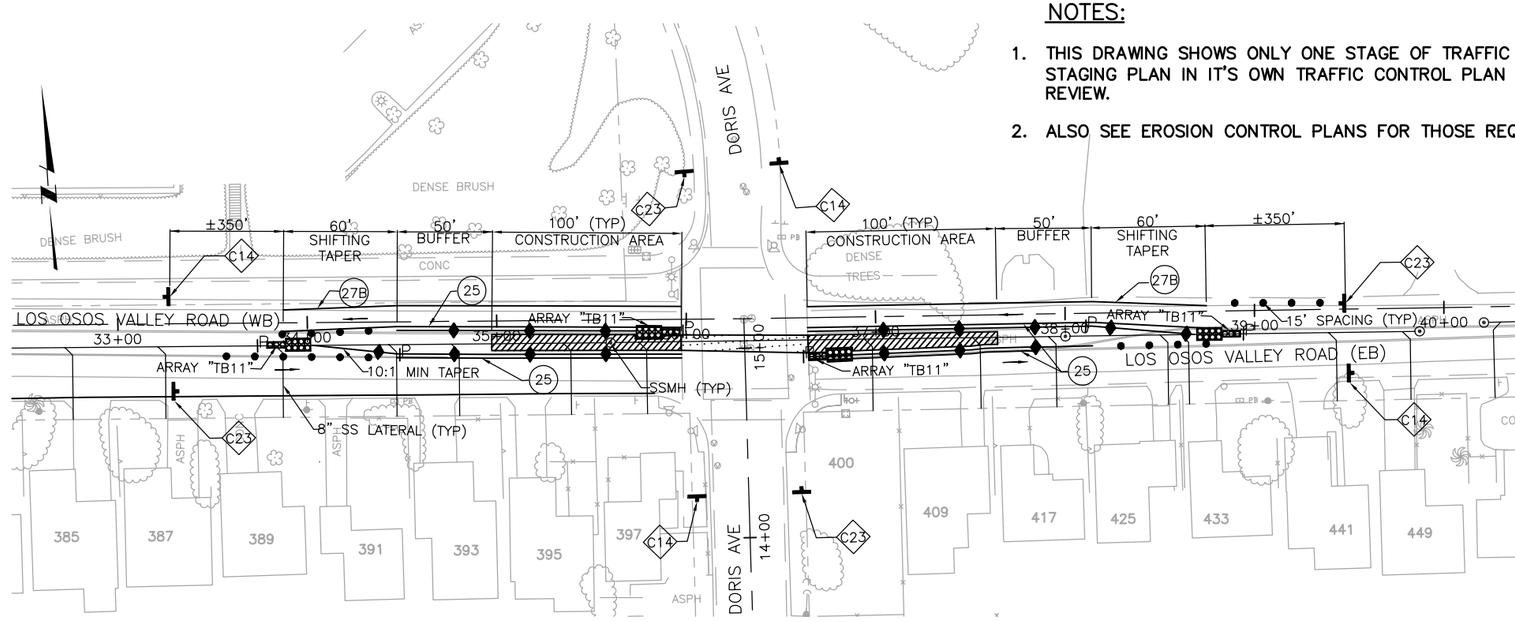

LOS OSOS VALLEY ROAD AND DORIS AVE INTERSECTION

NOTES:

1. THIS DRAWING SHOWS ONLY ONE STAGE OF TRAFFIC CONTROL. THE CONTRACTOR SHALL INCLUDE IT'S STAGING PLAN IN IT'S OWN TRAFFIC CONTROL PLAN SUBMITTAL. SUBMIT TO THE ENGINEER FOR REVIEW.
2. ALSO SEE EROSION CONTROL PLANS FOR THOSE REQUIREMENTS.

REGISTERED PROFESSIONAL ENGINEER BENJAMIN C. TAM No. C62032 Exp. 9/30/05 CIVIL STATE OF CALIFORNIA

REV	DATE	BY	DESCRIPTION

SCALE: 1" = 40'

WARNING: 0 1/2 1 — IF THIS BAR DOES NOT MEASURE 1" THEN DRAWING IS NOT TO SCALE

DESIGNED BCT
DRAWN BCT
CHECKED JAB

SUBMITTED BY
JOHN A. BERGEN — C31069 — LICENSE NO. — 2-16-2004 — DATE
STEVEN J. HYLAND — C23892 — LICENSE NO. — 2-16-2004 — DATE

DIGALERT — DIAL TOLL FREE 1-800-642-2444 AT LEAST TWO DAYS BEFORE YOU DIG — UNDERGROUND SERVICE ALERT OF NORTHERN CALIFORNIA

LOS OSOS COMMUNITY SERVICES DISTRICT

MWH Walnut Creek, California

LOS OSOS WASTEWATER PROJECT
TRAFFIC CONTROL
LOS OSOS VALLEY ROAD 1

SHEET BC-TC-03

XREF: N-FEAT-CNBL N-FEAT-PROF X-FEAT-ADDR X-FEAT-APN X-FEAT-GOED X-FEAT-ROW los_osos_tc_bdr N-UTIL-SS ML X-FEAT-AERL X-UTIL-STRM traffic
FILE: N:\Projects\los_osos\Collect_Sys\Traffic\BC-TC-03.dwg USER: bctai Feb 07, 2004 5:16pm Job No: 1481166

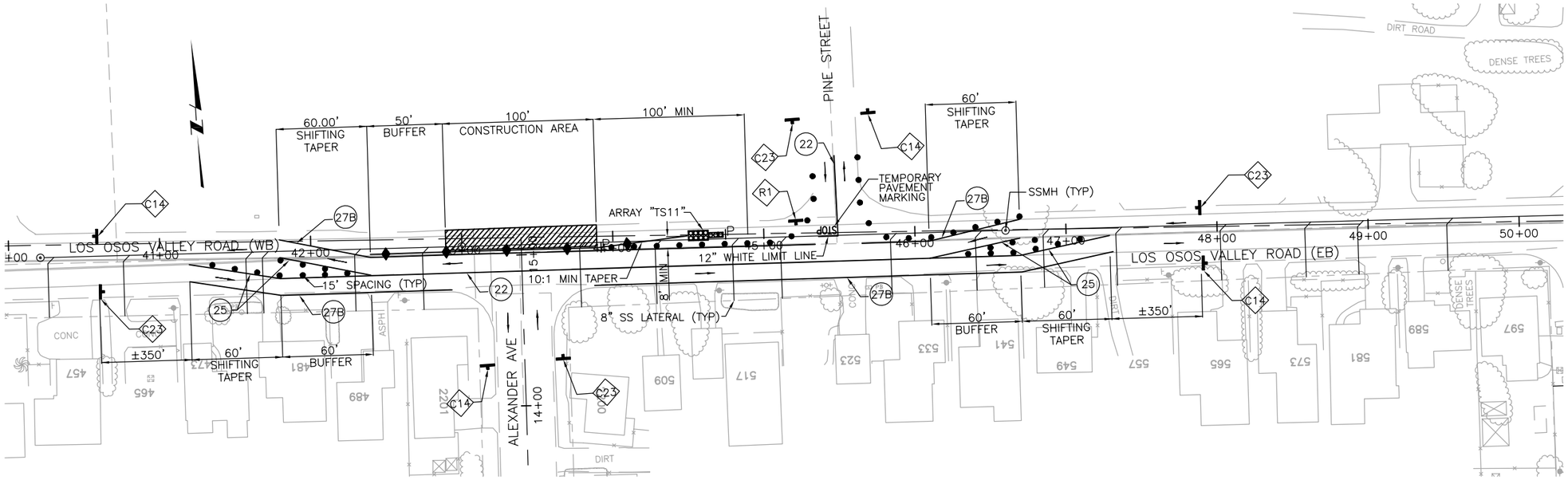

LOS OSOS VALLEY ROAD AND ALEXANDER AVE INTERSECTION

NOTES:

1. THIS DRAWING SHOWS ONLY ONE STAGE OF TRAFFIC CONTROL. THE CONTRACTOR SHALL INCLUDE IT'S STAGING PLAN IN IT'S OWN TRAFFIC CONTROL PLAN SUBMITTAL. SUBMIT TO THE ENGINEER FOR REVIEW.
2. ALSO SEE EROSION CONTROL PLANS FOR THOSE REQUIREMENTS.

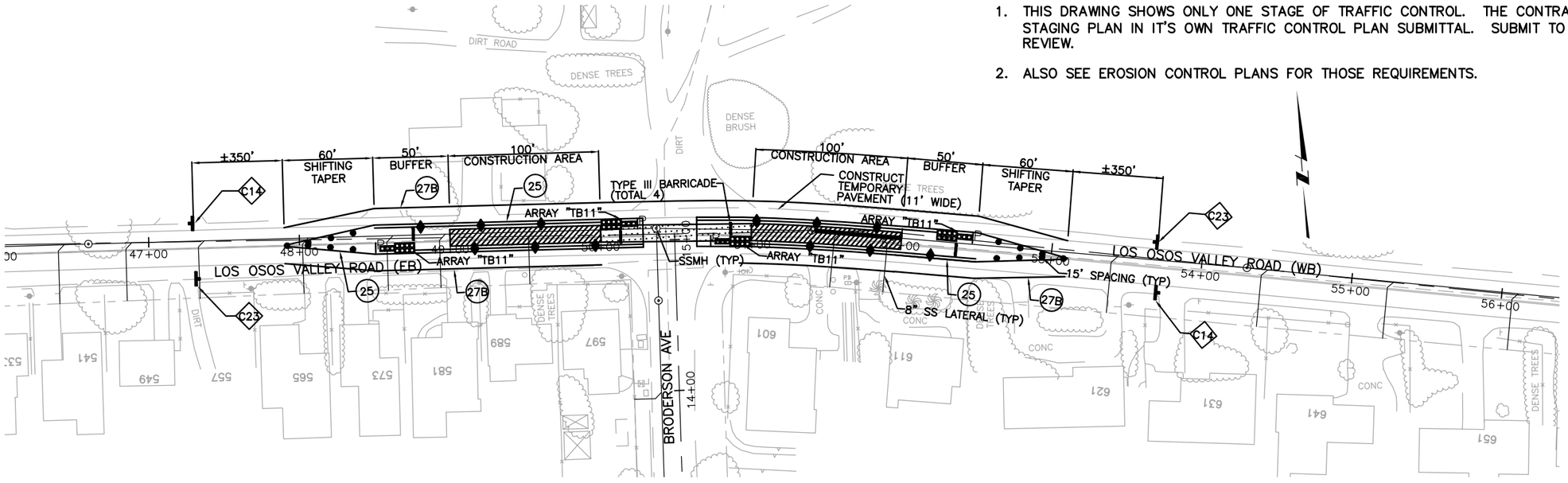

LOS OSOS VALLEY ROAD AND BRODERSON AVE INTERSECTION

REGISTERED PROFESSIONAL ENGINEER BENJAMIN C. TAM No. C62032 Exp. 9/30/05 CIVIL STATE OF CALIFORNIA

REV	DATE	BY	DESCRIPTION

SCALE: 1" = 40'

WARNING: 0 1/2 1 — IF THIS BAR DOES NOT MEASURE 1" THEN DRAWING IS NOT TO SCALE

DESIGNED BCT
DRAWN BCT
CHECKED JAB

SUBMITTED BY
JOHN A. BERGEN — C31069 — LICENSE NO. — 2-16-2004 — DATE
STEVEN J. HYLAND — C23892 — LICENSE NO. — 2-16-2004 — DATE

DIGALERT — DIAL TOLL FREE 1-800-642-2444 AT LEAST TWO DAYS BEFORE YOU DIG — UNDERGROUND SERVICE ALERT OF NORTHERN CALIFORNIA

LOS OSOS COMMUNITY SERVICES DISTRICT

MWH Walnut Creek, California

LOS OSOS WASTEWATER PROJECT
TRAFFIC CONTROL
LOS OSOS VALLEY ROAD 2

SHEET BC-TC-04

XREF: N-FEAT-CNBL N-FEAT-PROF X-FEAT-ADDR X-FEAT-APN X-FEAT-GOED X-FEAT-ROW los_osos_tc_bdr N-UTIL-SS ML X-FEAT-AERL X-UTIL-STRM traffic
FILE: N:\Projects\los_osos\Collect_Sys\Traffic\BC-TC-04.dwg USER: bctai Feb 07, 2004 5:18pm Job No: 1481166

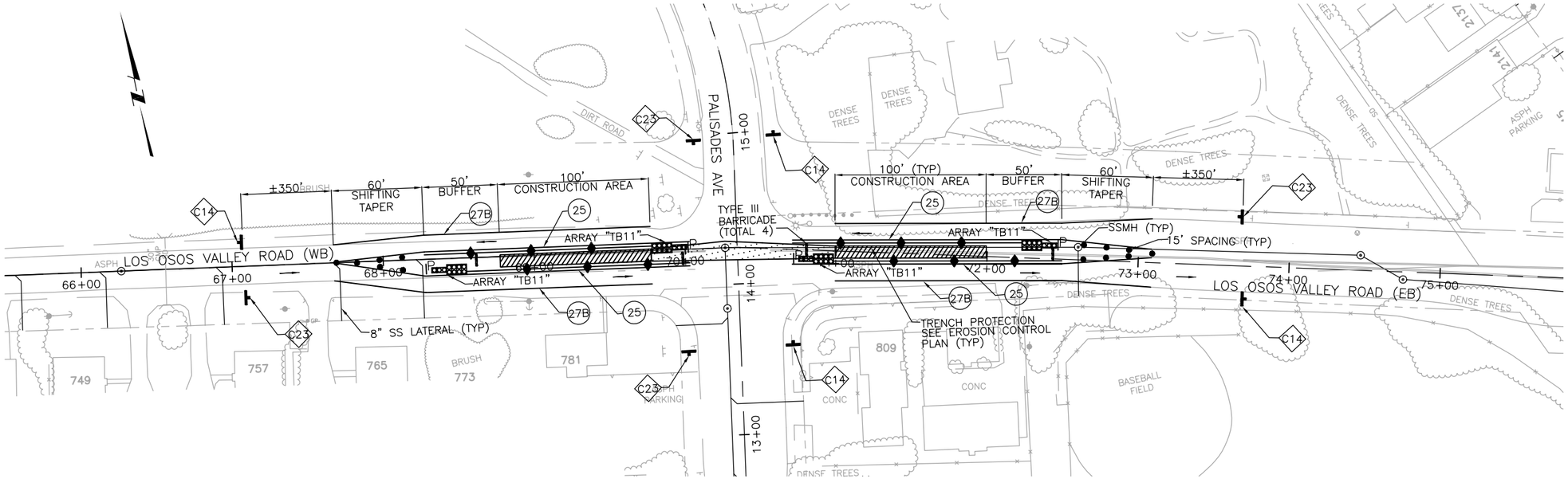

LOS OSOS VALLEY ROAD AND PALISADES AVE INTERSECTION

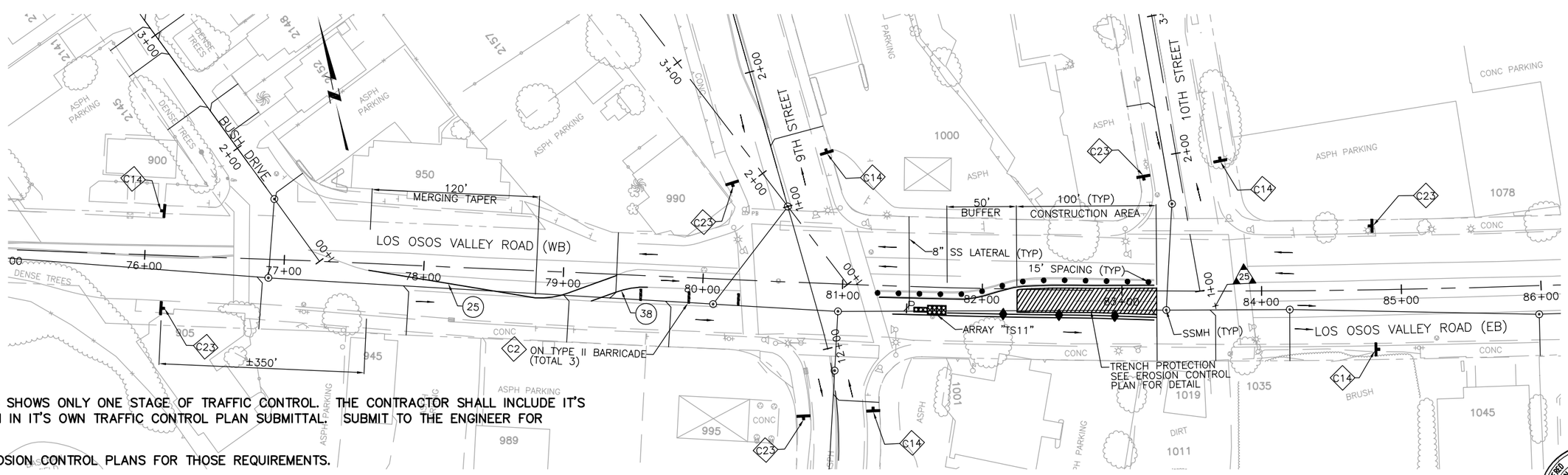

LOS OSOS VALLEY ROAD AND 9TH ST, 10TH ST INTERSECTIONS

NOTES:

1. THIS DRAWING SHOWS ONLY ONE STAGE OF TRAFFIC CONTROL. THE CONTRACTOR SHALL INCLUDE IT'S STAGING PLAN IN IT'S OWN TRAFFIC CONTROL PLAN SUBMITTAL. SUBMIT TO THE ENGINEER FOR REVIEW.
2. ALSO SEE EROSION CONTROL PLANS FOR THOSE REQUIREMENTS.

REGISTERED PROFESSIONAL ENGINEER BENJAMIN C. TAM No. C62032 Exp. 9/30/05 CIVIL STATE OF CALIFORNIA

REV	DATE	BY	DESCRIPTION

SCALE: 1" = 40'

WARNING: 0 1/2 1 — IF THIS BAR DOES NOT MEASURE 1" THEN DRAWING IS NOT TO SCALE

DESIGNED BCT
DRAWN BCT
CHECKED JAB

SUBMITTED BY
JOHN A. BERGEN — C31069 — LICENSE NO. — 2-16-2004 — DATE
STEVEN J. HYLAND — C23892 — LICENSE NO. — 2-16-2004 — DATE

DIGALERT — DIAL TOLL FREE 1-800-642-2444 AT LEAST TWO DAYS BEFORE YOU DIG — UNDERGROUND SERVICE ALERT OF NORTHERN CALIFORNIA

LOS OSOS COMMUNITY SERVICES DISTRICT

MWH Walnut Creek, California

LOS OSOS WASTEWATER PROJECT
TRAFFIC CONTROL
LOS OSOS VALLEY ROAD 3

SHEET BC-TC-05

XREF: N-FEAT-CNBL N-FEAT-PROF X-FEAT-ADDR X-FEAT-APN X-FEAT-GOED X-FEAT-ROW los_osos_tc_bdr N-UTIL-SS ML X-FEAT-AERL X-UTIL-STRM traffic
FILE: N:\Projects\los_osos\Collect_Sys\Traffic\BC-TC-05.dwg USER: bctai Feb 07, 2004 5:20pm Job No: 1481166

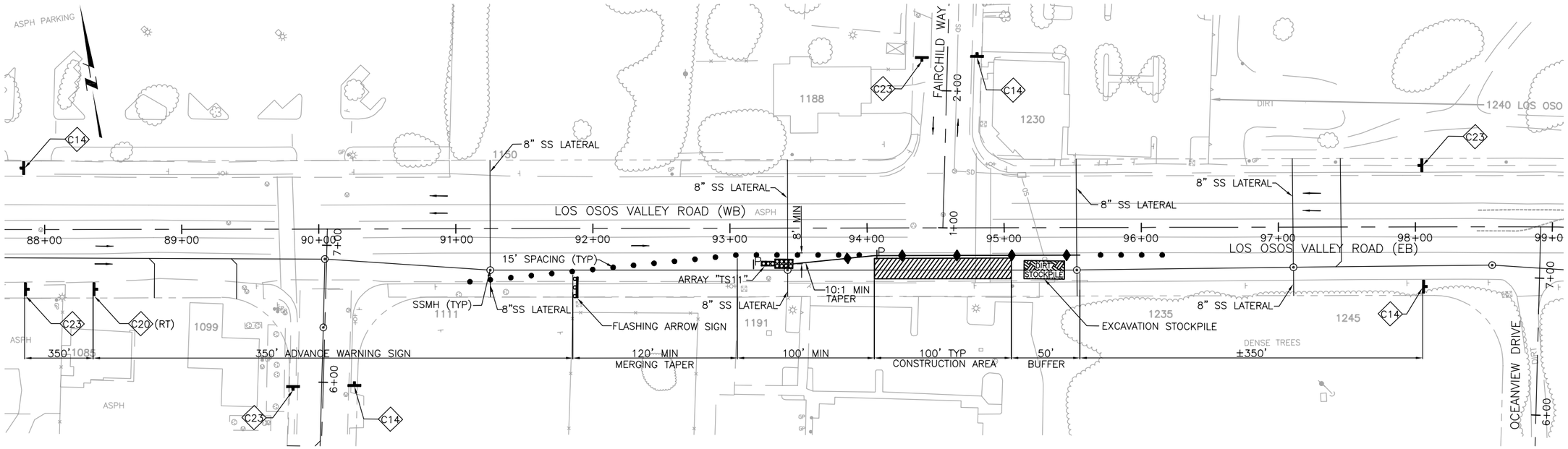

LOS OSOS VALLEY ROAD AND FAIRCHILD AVE INTERSECTION

NOTES:

1. THIS DRAWING SHOWS ONLY ONE STAGE OF TRAFFIC CONTROL. THE CONTRACTOR SHALL INCLUDE IT'S STAGING PLAN IN IT'S OWN TRAFFIC CONTROL PLAN SUBMITTAL. SUBMIT TO THE ENGINEER FOR REVIEW.
2. ALSO SEE EROSION CONTROL PLANS FOR THOSE REQUIREMENTS.

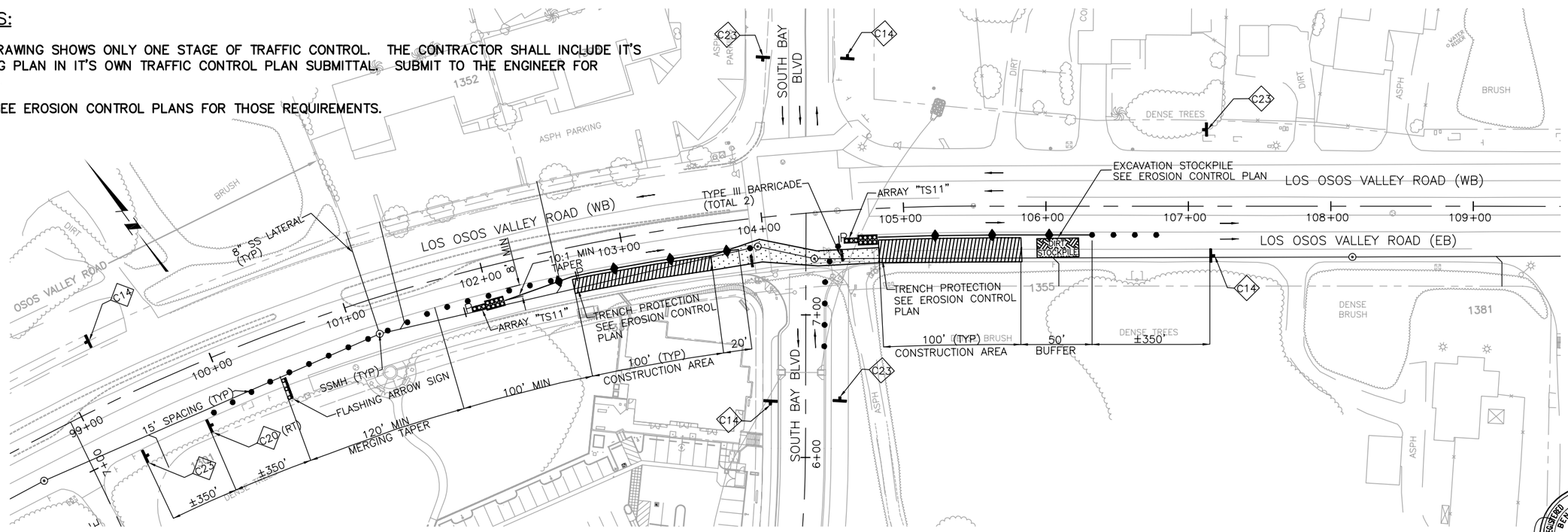

LOS OSOS VALLEY ROAD AND SOUTH BAY BLVD INTERSECTIONS

REGISTERED PROFESSIONAL ENGINEER BENJAMIN C. TAT No. C62032 Exp. 9/30/05 CIVIL STATE OF CALIFORNIA

REV	DATE	BY	DESCRIPTION

SCALE: 1" = 40'

WARNING: 0 1/2 1 — IF THIS BAR DOES NOT MEASURE 1" THEN DRAWING IS NOT TO SCALE

DESIGNED BCT
DRAWN BCT
CHECKED JAB

SUBMITTED BY
JOHN A. BERGEN — C31069 — 2-16-2004 (LICENSE NO. / DATE)
STEVEN J. HYLAND — C23892 — 2-16-2004 (LICENSE NO. / DATE)

DIGALERT — DIAL TOLL FREE 1-800-642-2444 AT LEAST TWO DAYS BEFORE YOU DIG — UNDERGROUND SERVICE ALERT OF NORTHERN CALIFORNIA

LOS OSOS COMMUNITY SERVICES DISTRICT

MWH Walnut Creek, California

LOS OSOS WASTEWATER PROJECT
TRAFFIC CONTROL
LOS OSOS VALLEY ROAD 4

SHEET BC-TC-06

XREF: N-FEAT-CNBL N-FEAT-PROF X-FEAT-ADDR X-FEAT-APN X-FEAT-GOED X-FEAT-ROW los_osos_tc_bdr N-UTIL-SS ML X-FEAT-AERL X-UTIL-STRM traffic
FILE: N:\Projects\los_osos\Collect_Sys\Traffic\BC-TC-06.dwg USER: bctai Feb 07, 2004 5:22pm Job No: 1481166

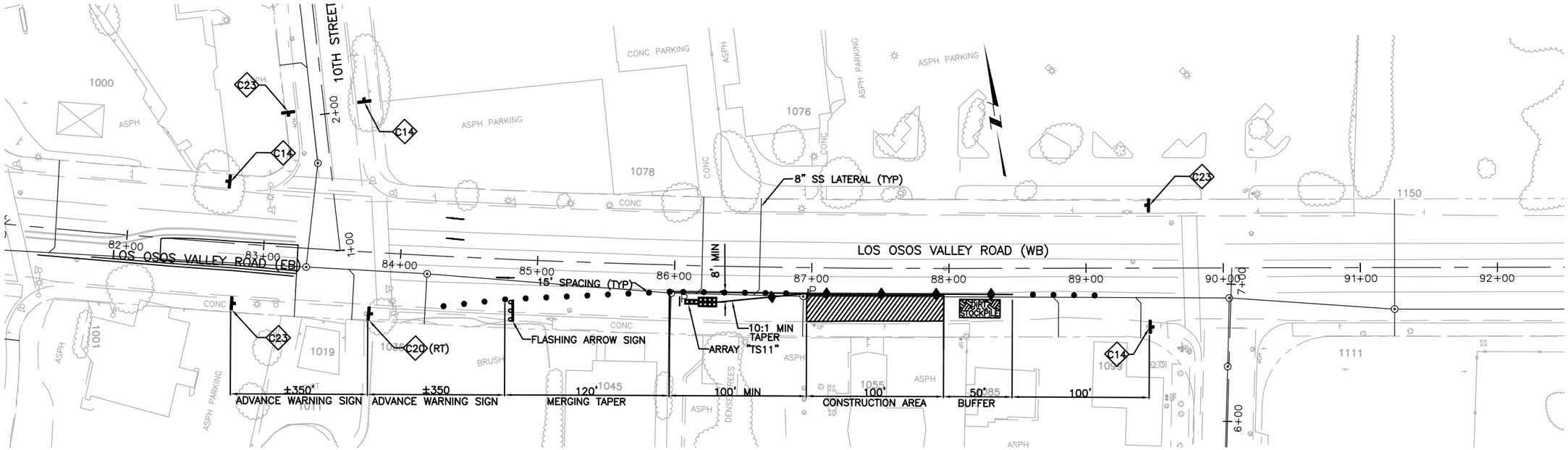

LOS OSOS VALLEY ROAD –TYPICAL MID–BLOCK CONSTRUCTION

NOTES:

1. THIS DRAWING SHOWS ONLY ONE STAGE OF TRAFFIC CONTROL. THE CONTRACTOR SHALL INCLUDE IT'S STAGING PLAN IN IT'S OWN TRAFFIC CONTROL PLAN SUBMITTAL. SUBMIT TO THE ENGINEER FOR REVIEW.
2. ALSO SEE EROSION CONTROL PLANS FOR THOSE REQUIREMENTS.

REGISTERED PROFESSIONAL ENGINEER BENJAMIN C. TAI No. C62032 Exp. 9/30/05 CIVIL STATE OF CALIFORNIA

REV	DATE	BY	DESCRIPTION

SCALE: 1" = 40'

WARNING: 0 1/2 1 — IF THIS BAR DOES NOT MEASURE 1" THEN DRAWING IS NOT TO SCALE

DESIGNED BCT
DRAWN BCT
CHECKED JAB

SUBMITTED BY
JOHN A. BERGEN — C31069 — 2-16-2004 (LICENSE NO. / DATE)
STEVEN J. HYLAND — C23892 — 2-16-2004 (LICENSE NO. / DATE)

DIGALERT — DIAL TOLL FREE 1-800-642-2444 AT LEAST TWO DAYS BEFORE YOU DIG — UNDERGROUND SERVICE ALERT OF NORTHERN CALIFORNIA

LOS OSOS COMMUNITY SERVICES DISTRICT

MWH Walnut Creek, California

LOS OSOS WASTEWATER PROJECT
TRAFFIC CONTROL
LOS OSOS VALLEY ROAD 5
TYPICAL MID–BLOCK CONSTRUCTION

SHEET BC–TC–07

XREF: N-FEAT-CNBL N-FEAT-PROF X-FEAT-ADDR X-FEAT-APN X-FEAT-GOED X-FEAT-ROW los_osos_tc_bdr N-UTIL-SS ML X-FEAT-AERL X-UTIL-STRM traffic
FILE: N:\Projects\los_osos\Collect_Sys\Traffic\BC-TC-07.dwg USER: bctai Feb 07, 2004 5:23pm Job No: 1481166

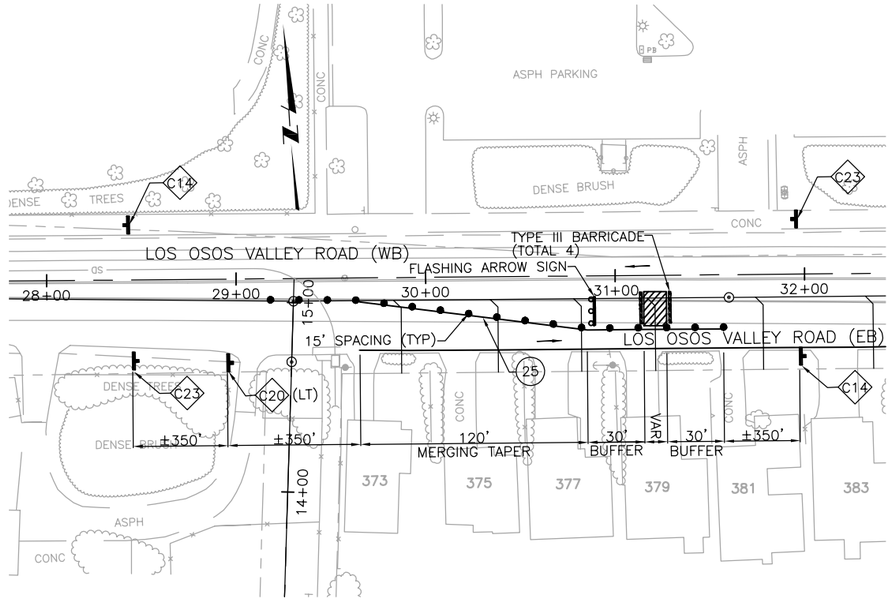

LOS OSOS VALLEY ROAD – TYPICAL SS LATERAL CONSTRUCTION (STAGE 1)

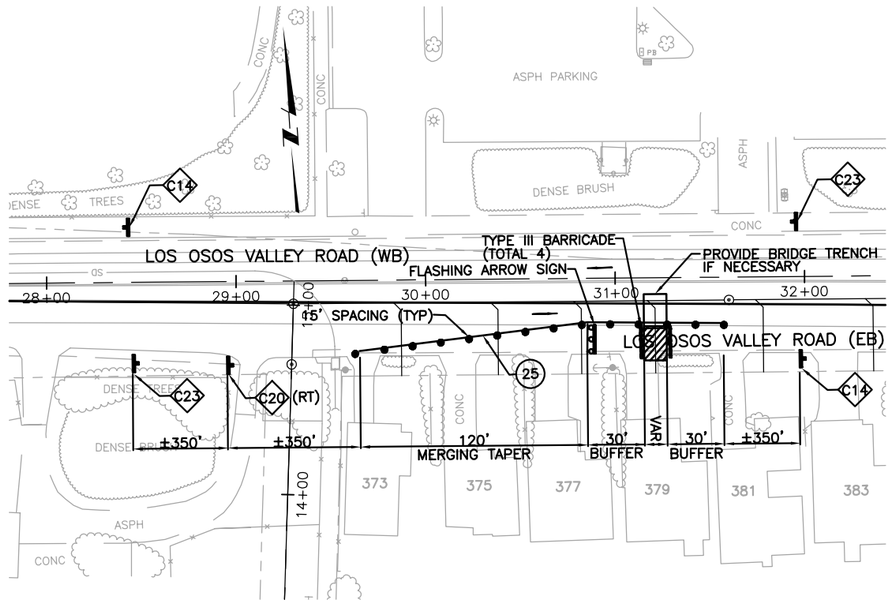

LOS OSOS VALLEY ROAD – TYPICAL SS LATERAL CONSTRUCTION (STAGE 2)

REGISTERED PROFESSIONAL ENGINEER BENJAMIN C. TAN No. C62032 Exp. 9/30/05 CIVIL STATE OF CALIFORNIA

REV	DATE	BY	DESCRIPTION

SCALE: 1" = 40'

WARNING: 0 1/2 1 — IF THIS BAR DOES NOT MEASURE 1" THEN DRAWING IS NOT TO SCALE

DESIGNED BCT
DRAWN BCT
CHECKED JAB

SUBMITTED BY
JOHN A. BERGEN — C31069 — LICENSE NO. — 2-16-2004 — DATE
STEVEN J. HYLAND — C23892 — LICENSE NO. — 2-16-2004 — DATE

DIGALERT — DIAL TOLL FREE 1-800-642-2444 AT LEAST TWO DAYS BEFORE YOU DIG — UNDERGROUND SERVICE ALERT OF NORTHERN CALIFORNIA

LOS OSOS COMMUNITY SERVICES DISTRICT

MWH Walnut Creek, California

LOS OSOS WASTEWATER PROJECT
TRAFFIC CONTROL
LOS OSOS VALLEY ROAD 6
TYPICAL SS LATERAL CONSTRUCTION

SHEET BC-TC-08

XREF: N-FEAT-CNBL N-FEAT-PROF X-FEAT-ADDR X-FEAT-APN X-FEAT-GOED X-FEAT-ROW los_osos_tc_bdr N-UTIL-SS ML X-FEAT-AERL X-UTIL-STRM traffic
FILE: N:\Projects\los_osos\Collect_Sys\Traffic\BC-TC-08.dwg USER: bctai Feb 07, 2004 5:26pm Job No: 1481166

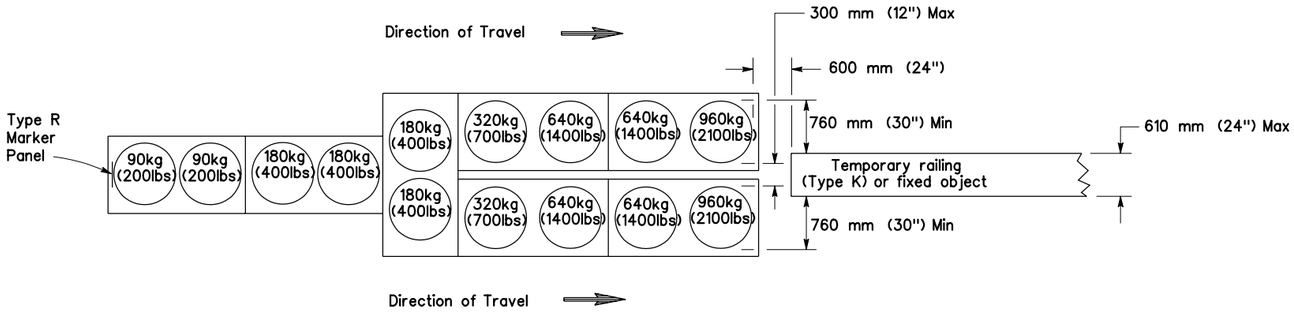

ARRAY 'TU14'

Approach speed 100 km/h (62 mph) or less

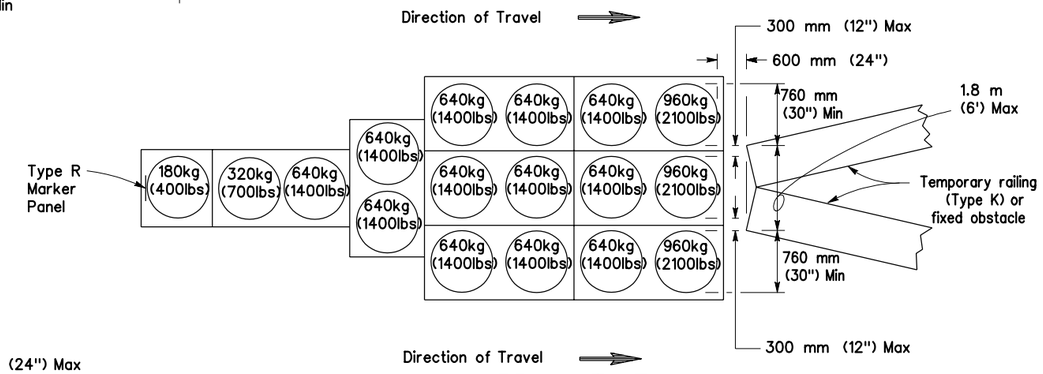

ARRAY 'TU17'

Approach speed 70 km/h (43 mph) or less

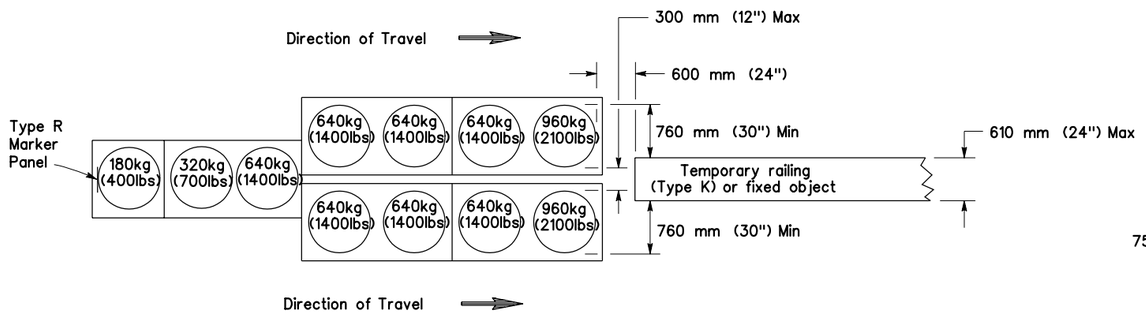

ARRAY 'TU11'

Approach speed 70 km/h (43 mph) or less

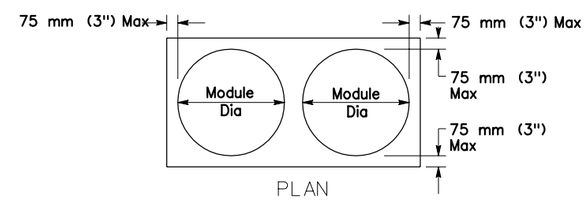

PLAN

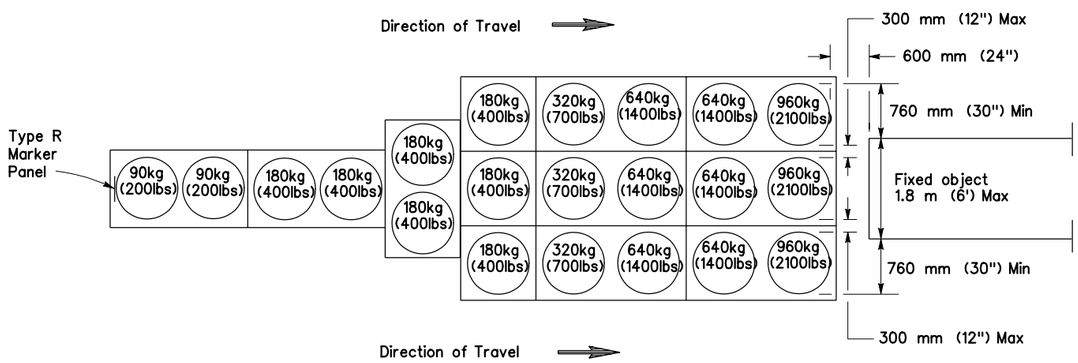

ARRAY 'TU21'

Approach speed 100 km/h (62 mph) or less

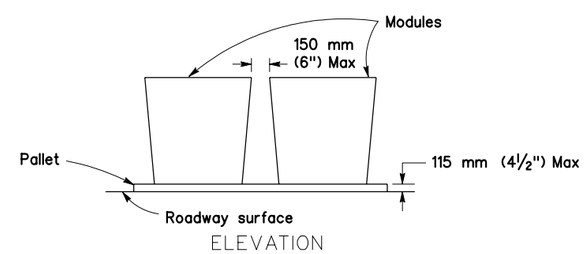

ELEVATION

CRASH CUSHION PALLET DETAIL

NOTES:

1. (XXX) Indicates sand filled module location and mass of sand in kilograms (weight of sand in pounds) for each module. Module spacing is based on the greater diameter of the module.
2. All sand masses are (weights) nominal.
3. Temporary crash cushion arrays shall not encroach on the traveled way.
4. Place the top of Type R marker panel 25 mm (1") below the module lid.
5. Refer to Standard Plan A73B for marker details.

These "Standard Plans for Construction of Local Streets and Roads" contain units in two systems of measurement: International System of Units (SI or "metric") and United States Standard Measures shown in the parentheses ( ). The measurements expressed in the two systems are not necessarily equal or interchangeable. See the "Foreword" at the beginning of this publication.

REV	DATE	BY	DESCRIPTION

SCALE: NONE

WARNING: 0 1/2 1 — IF THIS BAR DOES NOT MEASURE 1" THEN DRAWING IS NOT TO SCALE

DESIGNED B. TAI
DRAWN B. TAI
CHECKED J. BERGEN

SUBMITTED BY
JOHN A. BERGEN — C31069 LICENSE NO. — 2/16/2004 DATE
STEVE J. HYLAND — C23892 LICENSE NO. — 2/16/2004 DATE

DIGALERT — DIAL TOLL FREE 1-800-642-2444 AT LEAST TWO DAYS BEFORE YOU DIG — UNDERGROUND SERVICE ALERT OF NORTHERN CALIFORNIA

LOS OSOS COMMUNITY SERVICES DISTRICT

MWH Walnut Creek, California

SUBCONSULTANT'S LOGO

LOS OSOS WASTEWATER PROJECT

TRAFFIC CONTROL PLAN
TEMPORARY CRASH CUSHION, SAND FILLED

SHEET BC-TC-T01A

Job No: 1481166 File: N:\Projects\los_osos\Collect_Sys\Traffic\bc-tc-t01a.dgn Plot Date: 07-FEB-2004 16:40

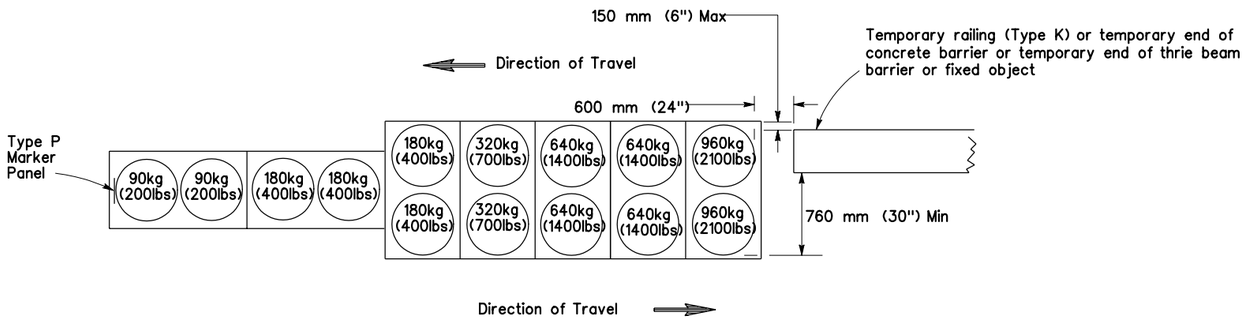

ARRAY 'TB14'

Approach speed 100 km/h (62 mph) or less

NOTES:

1. (XXX) Indicates sand filled module location and mass of sand in kilograms (weight of sand in pounds) for each module. Module spacing is based on the greater diameter of the module.
2. All sand masses (weight) are nominal.
3. Temporary crash cushion arrays shall not encroach on the traveled way.
4. Place the Type P marker panel so that the bottom of the panel rests upon the pallet.
5. Refer to Standard Plan A73B for marker details.

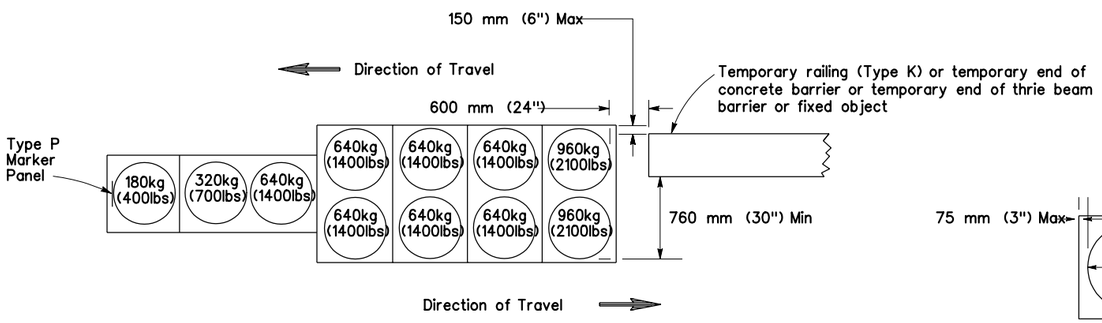

ARRAY 'TB11'

Approach speed 70 km/h (43 mph) or less

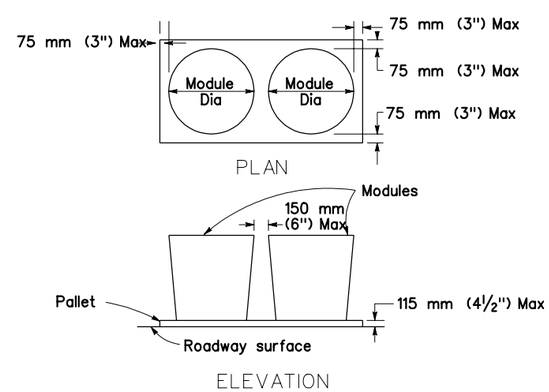

CRASH CUSHION PALLET DETAIL

These "Standard Plans for Construction of Local Streets and Roads" contain units in two systems of measurement: International System of Units (SI or "metric") and United States Standard Measures shown in the parentheses ( ). The measurements expressed in the two systems are not necessarily equal or interchangeable. See the "Foreword" at the beginning of this publication.

Job No: 1481166 File: N:\Projects\los_osos\Collect_Sys\Traffic\bc-tc-t01b.dgn Plot Date: 07-FEB-2004 16:40

REV	DATE	BY	DESCRIPTION

SCALE: NONE

WARNING: 0 1/2 1 — IF THIS BAR DOES NOT MEASURE 1" THEN DRAWING IS NOT TO SCALE

DESIGNED B. TAI
DRAWN B. TAI
CHECKED J. BERGEN

SUBMITTED BY
JOHN A. BERGEN — C31069 LICENSE NO. — 2/16/2004 DATE
STEVE J. HYLAND — C23892 LICENSE NO. — 2/16/2004 DATE

DIGALERT — DIAL TOLL FREE 1-800-642-2444 AT LEAST TWO DAYS BEFORE YOU DIG — UNDERGROUND SERVICE ALERT OF NORTHERN CALIFORNIA

LOS OSOS COMMUNITY SERVICES DISTRICT

MWH Walnut Creek, California

SUBCONSULTANT'S LOGO

LOS OSOS WASTEWATER PROJECT

TRAFFIC CONTROL PLAN
TEMPORARY CRASH CUSHION,
SAND FILLED (BIDIRECTIONAL)

SHEET BC-TC-T01B

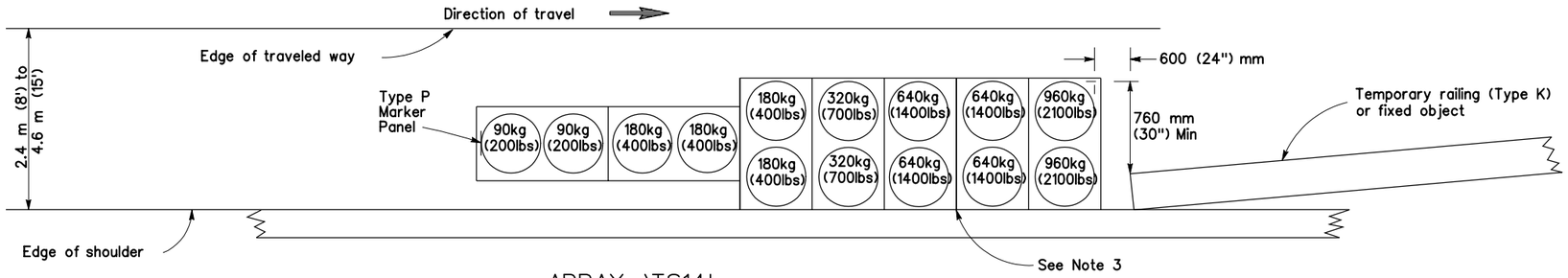

ARRAY 'TS14'

Approach speed 100 km/h (62 mph) or less
See Note 9

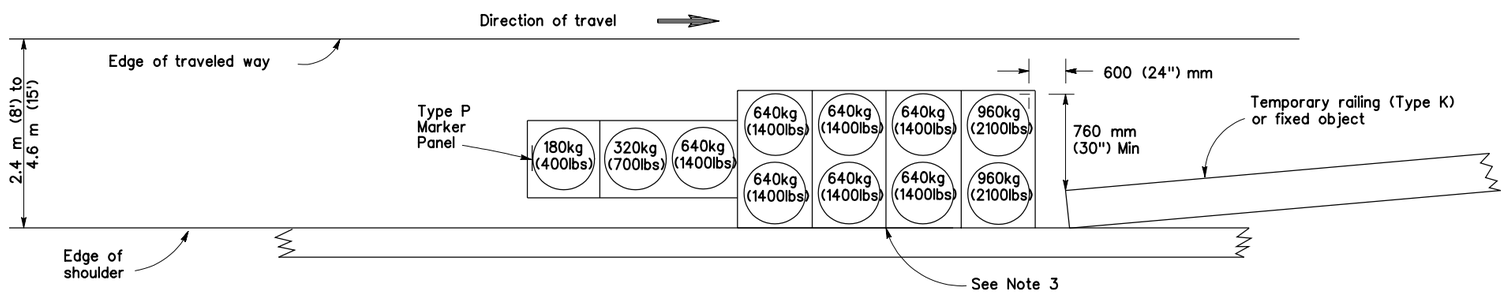

ARRAY 'TS11'

Approach speed 70 km/h (43 mph) or less
See Note 9

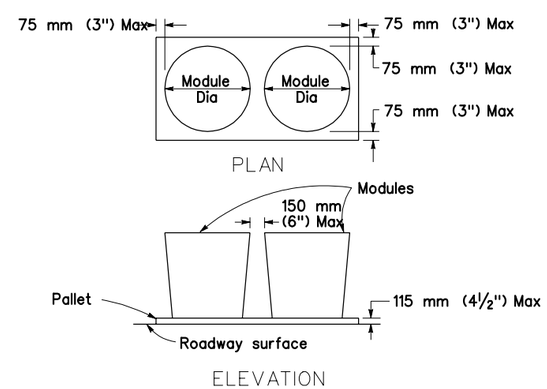

CRASH CUSHION PALLET DETAIL

NOTES:

1. (XXX) Indicates sand filled module location and mass of sand in kilograms (weight of sand in pounds) for each module. Module spacing is based on the greater diameter of the module.
2. All sand masses (weights) are nominal.
3. The temporary crash cushion arrays shown on this plan shall be used only in locations where there will be traffic on one side of the temporary crash cushion array.
4. If the fixed object or approach end of the temporary railing is less than 4.60 m (15') from the edge of traveled way, a temporary crash cushion is required.
5. Temporary crash cushion arrays shall not encroach on the traveled way.
6. Arrays for median shoulders shall conform to details shown on this plan for outside shoulders.
7. Place the Type P marker panel so that the bottom of the panel rest upon the pallet and faces traffic.
8. *Refer to Standard Plan A73B for marker details.*
9. *For shoulder widths less than 2.4 m (8'), appropriate approved crash cushion protection, other than sand filled modules, shall be provided at fixed objects and at approach ends of temporary railing. The specific type of crash cushion shall be as shown on the project plans or as specified in the Special Provisions, or if not shown on the project plans or specified in the Special Provisions, shall be as approved by the Engineer.*
10. *Approach speeds indicated conform to NCHRP 350 Report criteria.*

These "Standard Plans for Construction of Local Streets and Roads" contain units in two systems of measurement: International System of Units (SI or "metric") and United States Standard Measures shown in the parentheses ( ). The measurements expressed in the two systems are not necessarily equal or interchangeable. See the "Foreword" at the beginning of this publication.

Job No: 1481166 File: N:\Projects\los_osos\Collect_Sys\Traffic\bc-tc-t02.dgn Plot Date: 07-FEB-2004 16:41

REV	DATE	BY	DESCRIPTION

SCALE: NONE

WARNING: 0 1/2 1 — IF THIS BAR DOES NOT MEASURE 1" THEN DRAWING IS NOT TO SCALE

DESIGNED B. TAI
DRAWN B. TAI
CHECKED J. BERGEN

SUBMITTED BY
JOHN A. BERGEN — C31069 LICENSE NO. — 2/16/2004 DATE
STEVE J. HYLAND — C23892 LICENSE NO. — 2/16/2004 DATE

DIGALERT — DIAL TOLL FREE 1-800-642-2444 AT LEAST TWO DAYS BEFORE YOU DIG — UNDERGROUND SERVICE ALERT OF NORTHERN CALIFORNIA

LOS OSOS COMMUNITY SERVICES DISTRICT

MWH Walnut Creek, California

SUBCONSULTANT'S LOGO

LOS OSOS WASTEWATER PROJECT
TRAFFIC CONTROL PLAN
TEMPORARY CRASH CUSHION
SAND FILLED (SHOULDER INSTALLATIONS)

SHEET BC-TC-T02

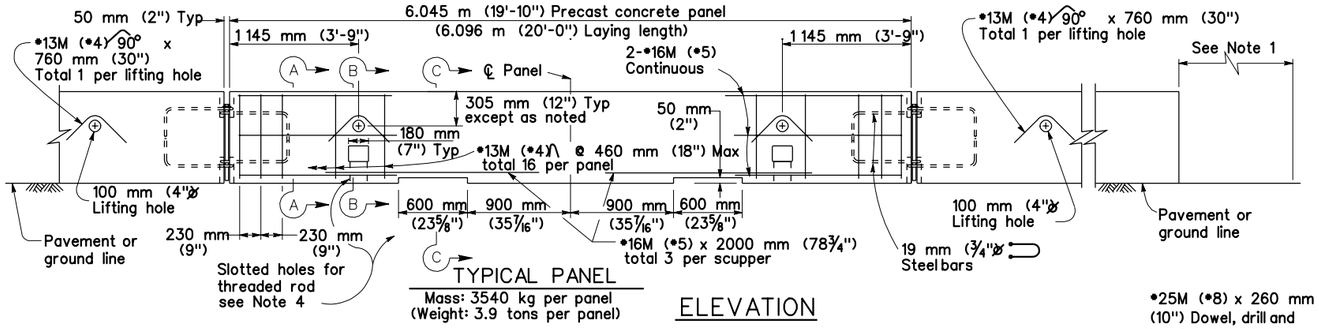

TYPICAL PANEL

Mass: 3540 kg per panel
(Weight: 3.9 tons per panel)

ELEVATION

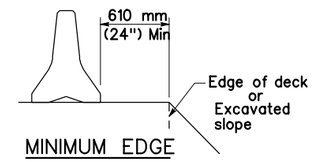

MINIMUM EDGE DISTANCE

NOTES:

1. For end treatment, layout and crash cushions, where needed, see Project Plans or Special Provisions.
2. All 90 mm (3½") gaps at removable panels are to be backed at the base with •25M (•8") x 260 mm (10") dowel or 25.4 mm (1") ø pin each side of joint. See Section G-G.
3. Where Temporary Railing (Type K) is placed on curves and radii that are too severe to connect panels with bolted joints, the railing is to be backed continuously with earth fill. See Section F-F.
4. Attach units to deck slabs when required by Bridge Plans.

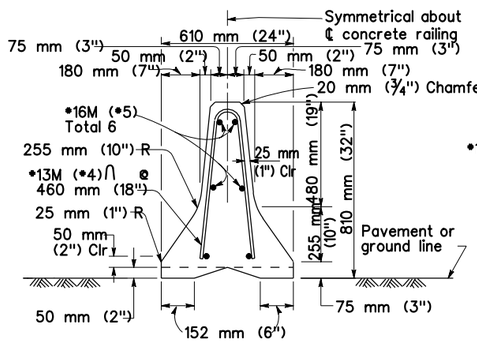

SECTION A-A

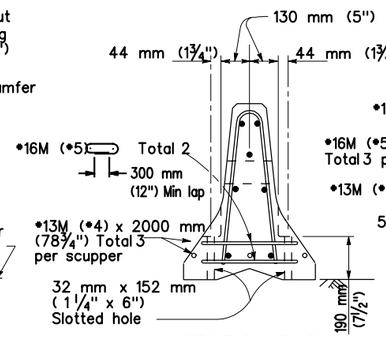

SECTION B-B

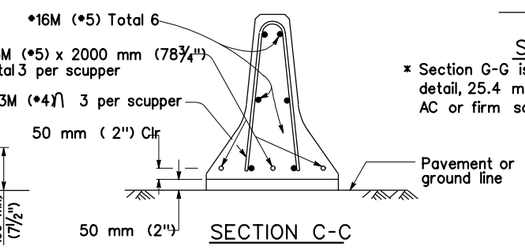

SECTION C-C

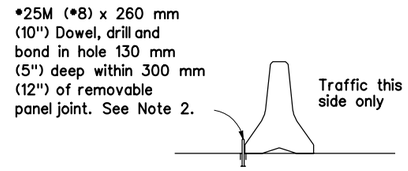

SECTION G-G *

* Section G-G is for PCC pavement. Alternative detail, 25.4 mm (1"ø pins 610 mm (24") long driven in AC or firm soil permitted, minimum 460 mm (18") deep.

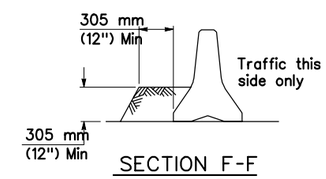

SECTION F-F

See Note 3

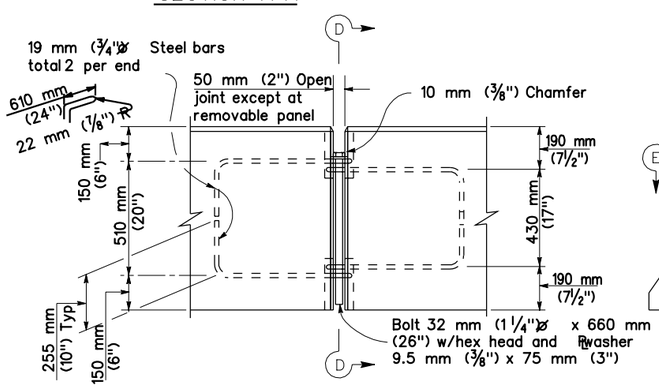

ELEVATION

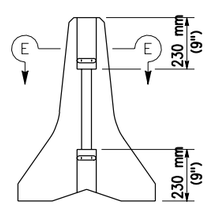

VIEW D-D

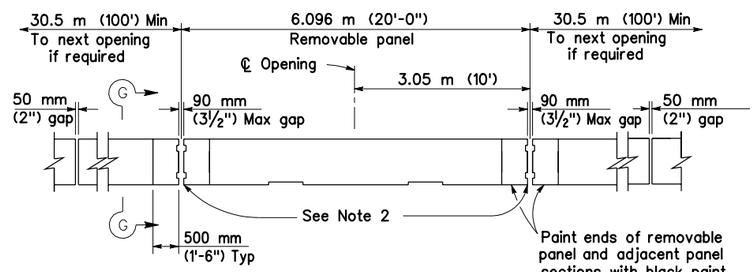

ELEVATION

TYPICAL OPENING DETAIL

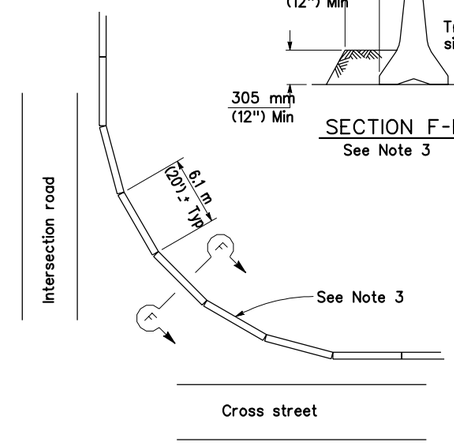

CURVED LAYOUT

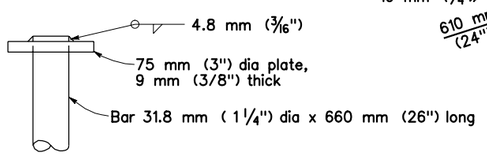

ALTERNATIVE HEAD DETAIL

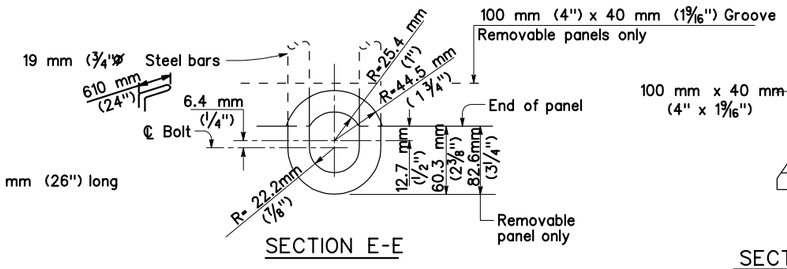

SECTION E-E

BOLT CONNECTION DETAIL

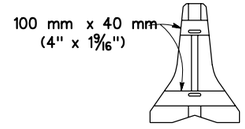

SECTION H-H

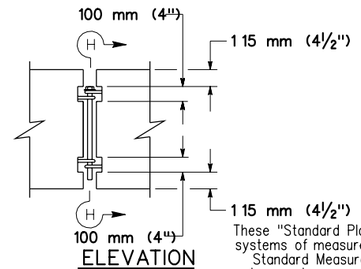

ELEVATION

REMOVABLE PANEL GROOVE DETAILS

These "Standard Plans for Construction of Local Streets and Roads" contain units in two systems of measurement: International System of Units (SI or "metric") and United States Standard Measures shown in the parentheses ( ). The measurements expressed in the two systems are not necessarily equal or interchangeable. See the "Foreword" at the beginning of this publication.

REV	DATE	BY	DESCRIPTION

SCALE: NONE

WARNING: 0 1/2 1 — IF THIS BAR DOES NOT MEASURE 1" THEN DRAWING IS NOT TO SCALE

DESIGNED B. TAI
DRAWN B. TAI
CHECKED J. BERGEN

SUBMITTED BY
JOHN A. BERGEN — C31069 LICENSE NO. — 2/16/2004 DATE
STEVE J. HYLAND — C23892 LICENSE NO. — 2/16/2004 DATE

DIGALERT — DIAL TOLL FREE 1-800-642-2444 AT LEAST TWO DAYS BEFORE YOU DIG — UNDERGROUND SERVICE ALERT OF NORTHERN CALIFORNIA

LOS OSOS COMMUNITY SERVICES DISTRICT

MWH Walnut Creek, California

SUBCONSULTANT'S LOGO

LOS OSOS WASTEWATER PROJECT
TRAFFIC CONTROL PLAN
TEMPORARY RAILING
(TYPE K)

SHEET BC–TC–T03

Job No: 1481166 File: N:\Projects\los_osos\Collect_Sys\Traffic\bc-tc-t03.dgn Plot Date: 07-FEB-2004 16:41

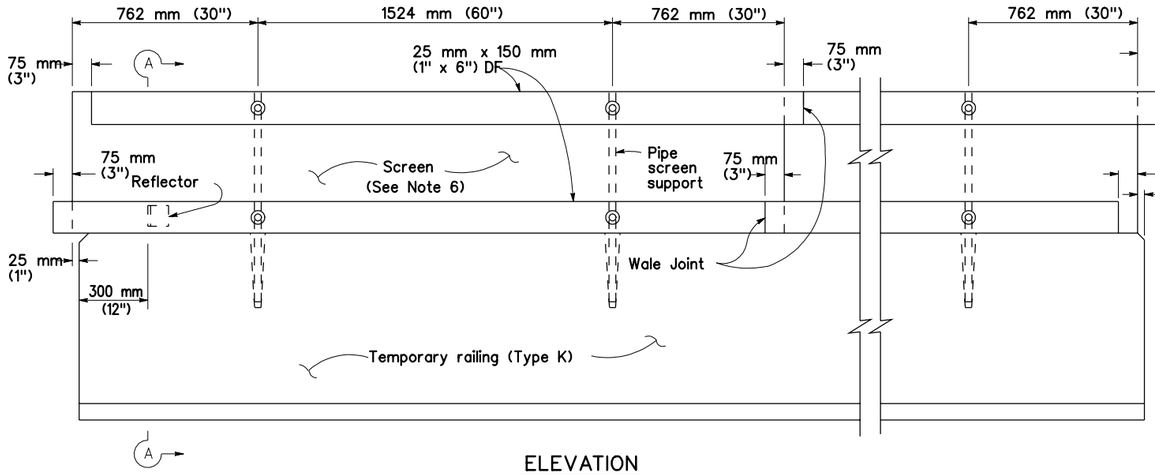

ELEVATION

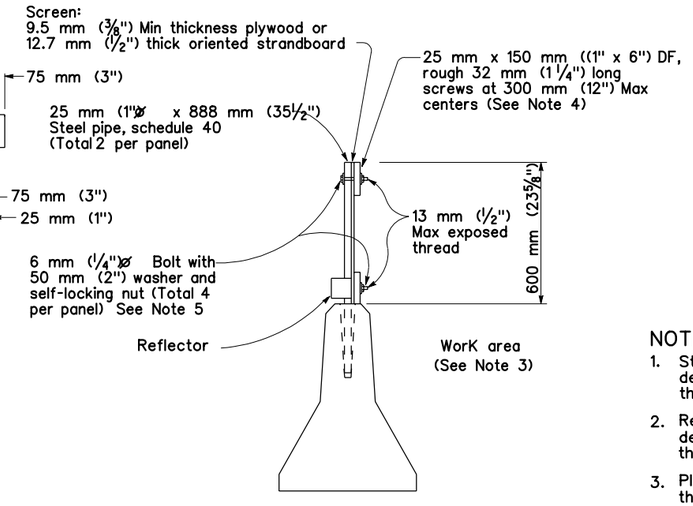

SECTION A-A

NOTE:

1. Straight holes 38 mm (1 1/2") ø of the depth shown may be used in lieu of the tapered holes.
2. Resin capsule-type anchorage devices may be substituted for threaded rods.
3. Place screen on work area side of the temporary railing where traffic will only be on one side of the temporary railing.
4. Clinched 8d box nails may be substituted for screws. The nails shall be clinched on the work area side of the screen where traffic will only be on one side of the temporary railing.
5. U-bolts may be substituted for 6 mm (1/4"ø bolts.
6. Openings in the screen of 1.0 m (3') length shall be provided at 60 m (200') intervals.

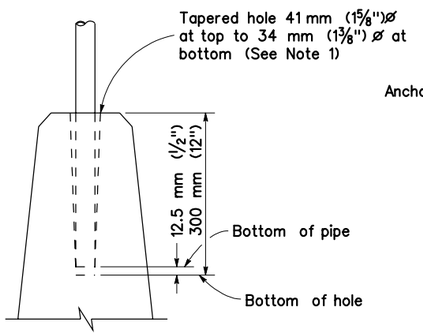

SCREEN ANCHORAGE DETAIL

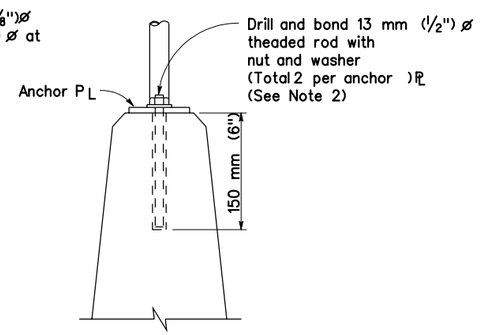

SCREEN ANCHORAGE DETAIL
ALTERNATIVE 'A'

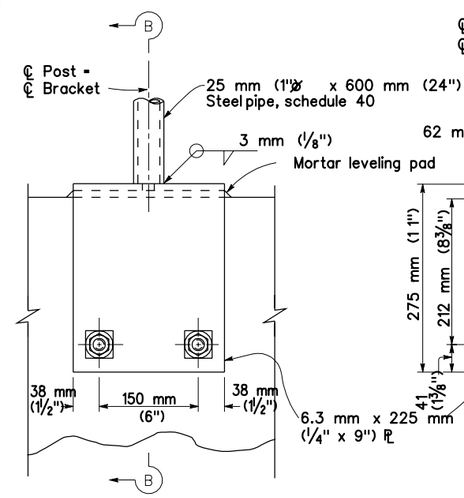

ELEVATION

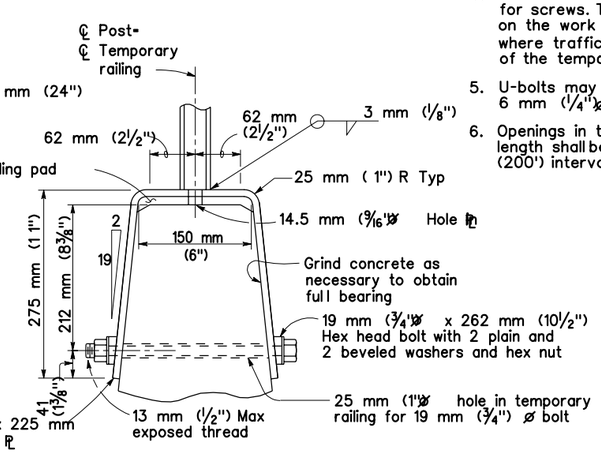

SECTION B-B

SCREEN ANCHORAGE DETAIL
ALTERNATIVE 'B'

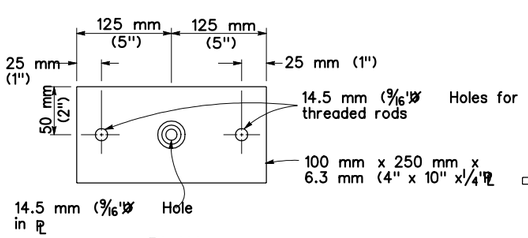

PLAN

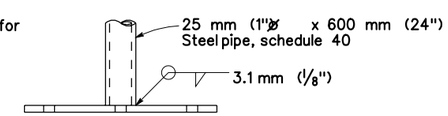

ELEVATION

ANCHOR PLATE DETAIL
ALTERNATIVE 'A'

These "Standard Plans for Construction of Local Streets and Roads" contain units in two systems of measurement: International System of Units (SI or "metric") and United States Standard Measures shown in the parentheses ( ). The measurements expressed in the two systems are not necessarily equal or interchangeable. See the "Foreword" at the beginning of this publication.

REV	DATE	BY	DESCRIPTION

SCALE: NONE

WARNING: 0 1/2 1 — IF THIS BAR DOES NOT MEASURE 1" THEN DRAWING IS NOT TO SCALE

DESIGNED B. TAI
DRAWN B. TAI
CHECKED J. BERGEN

SUBMITTED BY
JOHN A. BERGEN — C31069 LICENSE NO. — 2/16/2004 DATE
STEVE J. HYLAND — C23892 LICENSE NO. — 2/16/2004 DATE

DIGALERT — DIAL TOLL FREE 1-800-642-2444 AT LEAST TWO DAYS BEFORE YOU DIG — UNDERGROUND SERVICE ALERT OF NORTHERN CALIFORNIA

LOS OSOS COMMUNITY SERVICES DISTRICT

MWH Walnut Creek, California

SUBCONSULTANT'S LOGO

LOS OSOS WASTEWATER PROJECT
TRAFFIC CONTROL PLAN
TEMPORARY TRAFFIC SCREEN

SHEET BC-TC-T04

Job No: 1481166 File: N:\Projects\los_osos\Collect_Sys\Traffic\bc-tc-t04.dgn Plot Date: 07-FEB-2004 16:41

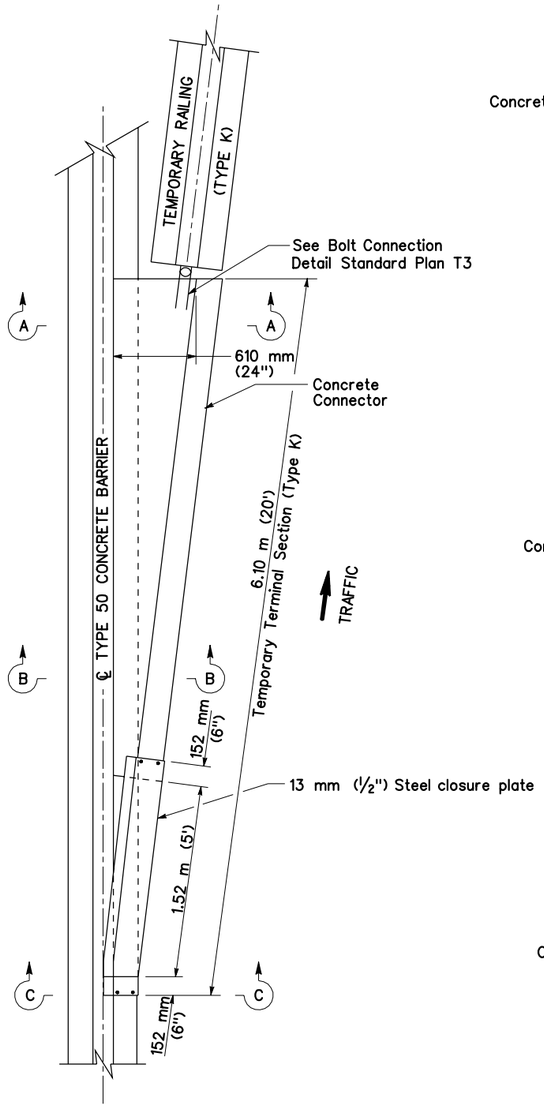

PLAN

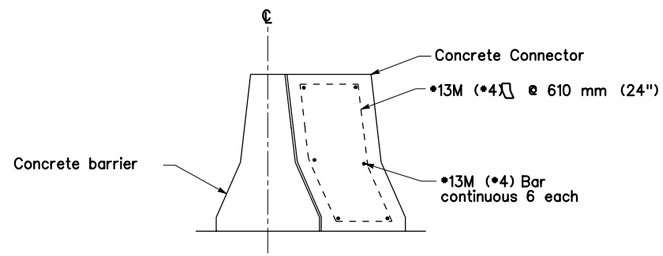

SECTION A-A

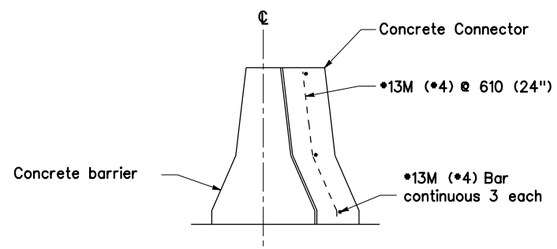

SECTION B-B

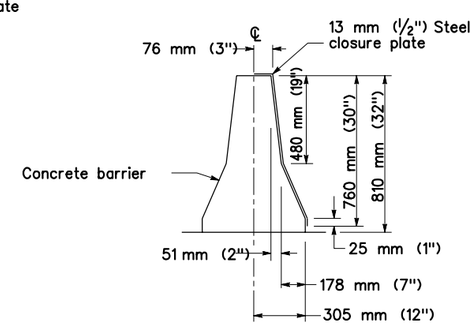

SECTION C-C

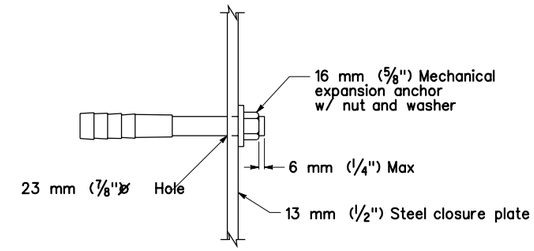

CLOSURE PLATE
ANCHOR BOLT DETAIL

NOTE:

1. If lifting holes are used with the concrete connector, they shall conform to the lifting hole details shown on Standard Plan T3.
2. Paint closure plate white.
3. When the temporary terminal section (Type K) is no longer required and is to be removed, the anchor bolts connecting the closure plate and the barrier shall be removed or cut flush with the face of the concrete barrier. If the anchor bolts are removed, the resulting holes shall be filled with grout.

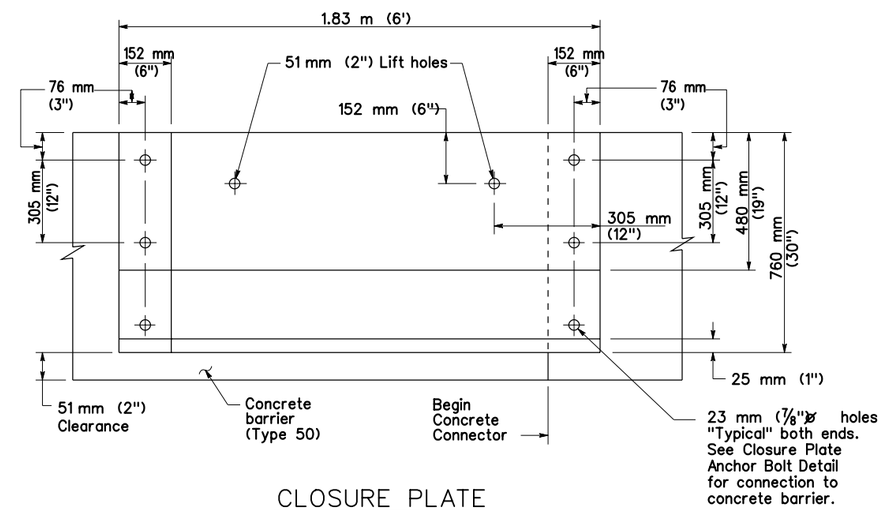

CLOSURE PLATE
(SIDE VIEW)

These "Standard Plans for Construction of Local Streets and Roads" contain units in two systems of measurement: International System of Units (SI or "metric") and United States Standard Measures shown in the parentheses ( ). The measurements expressed in the two systems are not necessarily equal or interchangeable. See the "Foreword" at the beginning of this publication.

Plot Date: 07-FEB-2004 16:41
File: N:\Projects\los_osos\Collect_Sys\Traffic\bc-tc-t05.dgn
Job No: 1481166

REV	DATE	BY	DESCRIPTION

SCALE: NONE

WARNING: 0 1/2 1 — IF THIS BAR DOES NOT MEASURE 1" THEN DRAWING IS NOT TO SCALE

DESIGNED B. TAI
DRAWN B. TAI
CHECKED J. BERGEN

SUBMITTED BY
JOHN A. BERGEN — C31069 LICENSE NO. — 2/16/2004 DATE
STEVE J. HYLAND — C23892 LICENSE NO. — 2/16/2004 DATE

DIGALERT — DIAL TOLL FREE 1-800-642-2444 AT LEAST TWO DAYS BEFORE YOU DIG — UNDERGROUND SERVICE ALERT OF NORTHERN CALIFORNIA

LOS OSOS COMMUNITY SERVICES DISTRICT

MWH Walnut Creek, California

SUBCONSULTANT'S LOGO

LOS OSOS WASTEWATER PROJECT
TRAFFIC CONTROL PLAN
TEMPORARY TERMINAL SECTION
(TYPE K)

SHEET BC-TC-T05

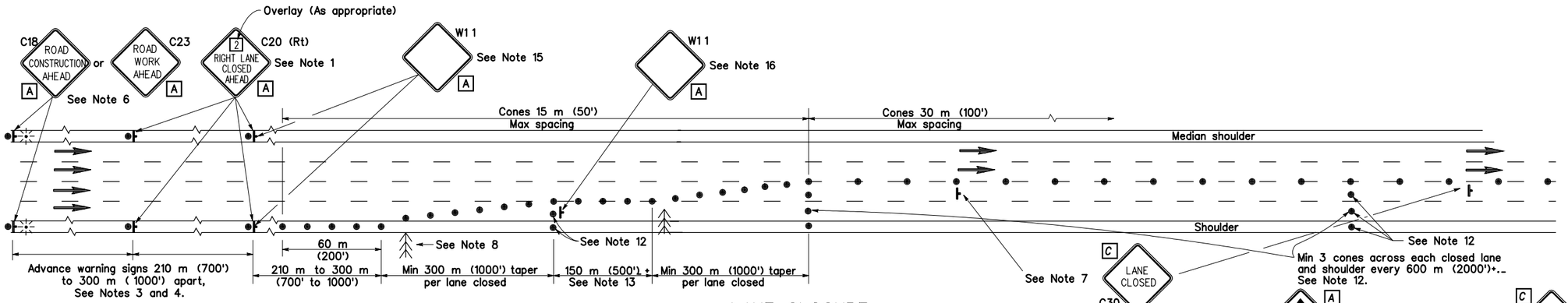

LANE CLOSURE

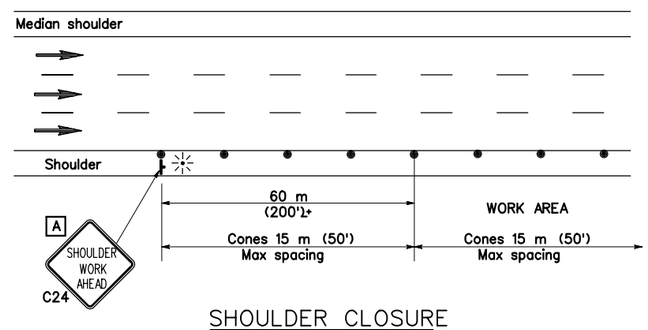

SHOULDER CLOSURE

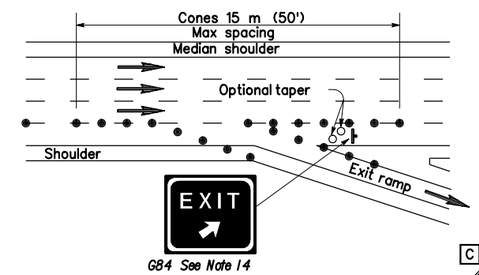

LANE CLOSURE AT EXIT RAMP

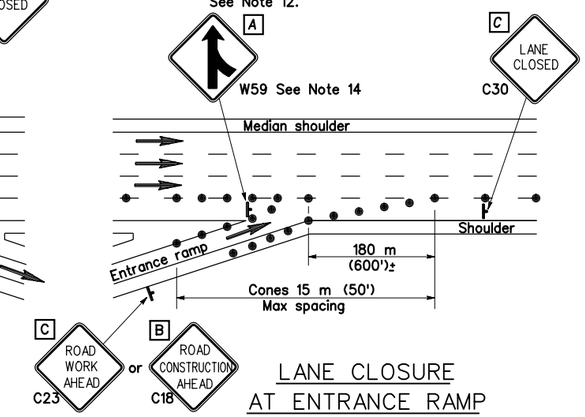

LANE CLOSURE AT ENTRANCE RAMP

NOTES

1. Median lane closures shall conform to the details for outside lane closures except that C20 (Lt) signs shall be used.
2. Not less than one person shall be assigned to full time maintenance of traffic control devices on all night lane closures or day-time closures exceeding 1.6 km (1 mile) in length, including taper.
3. Duplicate sign installations are not required:
   a) On opposite shoulder if at least one-half of the available lanes remain open to traffic.
   b) In the median, if the width of the median shoulder is less than 2.4 m (8') and the outside lanes are to be closed.
4. All advance warning sign installations shall be equipped with flags for daytime closures. Flashing beacons shall be placed at the locations indicated during night lane closure.
5. A C13 "END CONSTRUCTION" or C14 "END ROAD WORK" signs, as appropriate, shall be placed at the end of the lane closure unless the end of work area is obvious or ends within a larger project's limits.
6. If the C18 (or C23) sign would follow within 600 m (2000') of a stationary C18, C23 or C11 "STATE HIGHWAY CONSTRUCTION NEXT ____ MILES", use a C20 sign for the first advance warning sign.
7. Place a C30 sign every 600 m (2000') throughout length of lane closure.
8. One flashing arrow sign for each lane closed, The first flashing arrow sign shall be Type 1. All others may be either Type 1 or Type 11.
9. A minimum 450 m (1500') of sight distance shall be provided where possible for vehicles approaching the first flashing arrow sign. Lane closures shall not begin at top of crest vertical curve or on a horizontal curve.
10. All cones used for night lane closures shall be fitted with reflective sleeves as specified in the specifications.
11. Portable delineators, place at one-half the spacing indicated for traffic cones may be used in lieu of cones for daytime closures only.
12. Unless otherwise specified in the Special Provisions, a minimum of 3 cones shall be placed transversely across each closed lane and shoulder at each location where a taper across a traffic lane ends and every 600 m (2000') as shown on the "LANE CLOSURE" detail. Two Type II barricades may be used instead of the 3 cones. The transverse alignment of the cones or barricades on the closed shoulder may be shifted from the transverse alignment to provide access to the work.
13. Unless otherwise specified in the Special Provisions, the 150 m (500') section of the lane closure shown along lanelines shall be used between the 300 m (1000') lane closure tapers when two or more adjacent traffic lanes are to be closed
14. Unless otherwise specified in the Special Provisions, the G84 and W59 signs shall be used as shown.
15. Where specified in the Special Provisions, a W11 "LANE REDUCTION SYMBOL" sign is to be used in place of the C20 "RIGHT LANE CLOSED AHEAD" sign.
16. The W11 "LANE REDUCTION SYMBOL" sign shown at this location is to be used where the W11 sign is used as advance warning as described in Note 15.

SIGN PANEL SIZE (Min)

A	1219 mm x 1219 mm (48" x 48")
B	914 mm x 914 mm (36" x 36")
C	762 mm x 762 mm (30" x 30")

LEGEND

- Traffic Cone
- Traffic Cone (optional taper)
- Portable Sign
- Flashing Arrow Sign
- Direction of Travel
- Portable Flashing Beacon

These "Standard Plans for Construction of Local Streets and Roads" contain units in two systems of measurement: International System of Units (SI or "metric") and United States Standard Measures shown in the parentheses ( ). The measurements expressed in the two systems are not necessarily equal or interchangeable. See the "Foreword" at the beginning of this publication.

Job No: 1481166 File: N:\Projects\los_osos\Collect_Sys\Traffic\bc-tc-t10.dgn Plot Date: 07-FEB-2004 16:41

REV	DATE	BY	DESCRIPTION

SCALE: NONE

WARNING: 0 1/2 1 — IF THIS BAR DOES NOT MEASURE 1" THEN DRAWING IS NOT TO SCALE

DESIGNED B. TAI
DRAWN B. TAI
CHECKED J. BERGEN

SUBMITTED BY
JOHN A. BERGEN — C31069 LICENSE NO. — 2/16/2004 DATE
STEVE J. HYLAND — C23892 LICENSE NO. — 2/16/2004 DATE

DIGALERT DIAL TOLL FREE 1-800-642-2444 AT LEAST TWO DAYS BEFORE YOU DIG — UNDERGROUND SERVICE ALERT OF NORTHERN CALIFORNIA

LOS OSOS COMMUNITY SERVICES DISTRICT

MWH Walnut Creek, California

SUBCONSULTANT'S LOGO

LOS OSOS WASTEWATER PROJECT
TRAFFIC CONTROL PLAN
LANE CLOSURE ON
FREEWAYS AND EXPRESSWAYS

SHEET BC-TC-T10

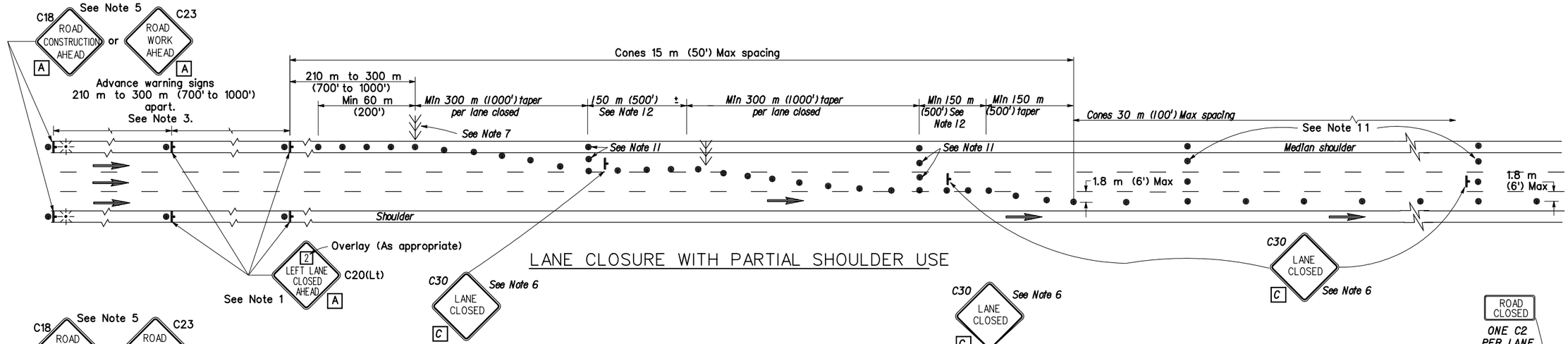

LANE CLOSURE WITH PARTIAL SHOULDER USE

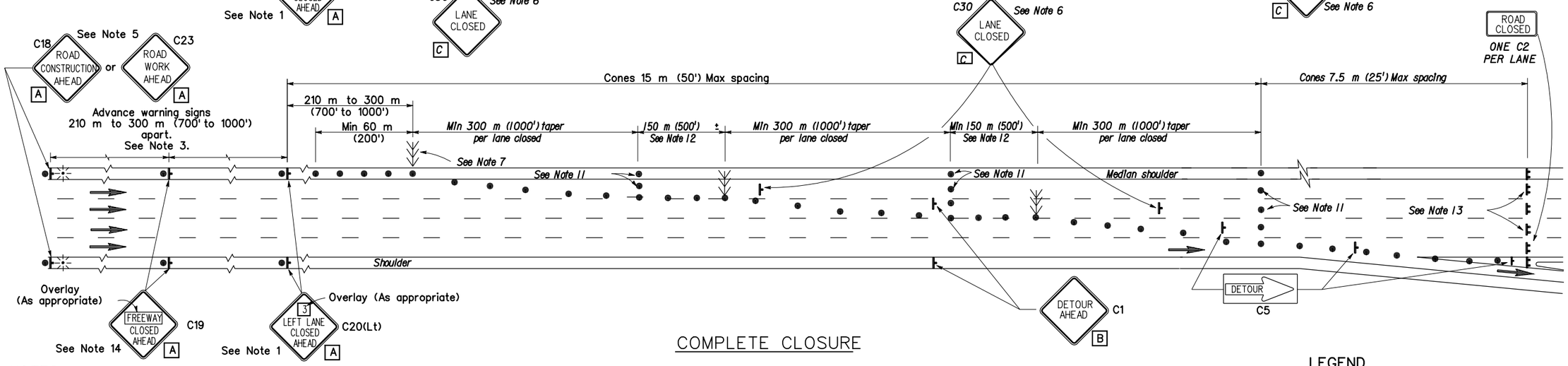

COMPLETE CLOSURE

NOTES:

1. Lane closures on the right side using partial median shoulder as a traffic lane shall conform to the details for inside lane closure except that C20(Rt) signs shall be used.
2. Not less than one person shall be assigned to full time maintenance of traffic control devices on all compete closures, on all night lane closures and daytime closures exceeding 1.6 km (one mile) in length, including taper.
3. All advance warning sign installations shall be equipped with flags for daytime closure. Flashing beacons shall be placed at the locations indicated during night lane closures.
4. A C13 "END CONSTRUCTION" or C14 "END ROAD WORK" sign, as appropriate, shall be placed at the end of the lane closure unless the end of work area is obvious or ends within a larger project's limits.
5. If the C18 (or C23) sign would follow within 600 m (2000') of a stationary C18, C23 or C 1 1 "STATE HIGHWAY CONSTRUCTION NEXT___ MILES" use a C20 sign for the first advance warning sign.
6. Place a C30 sign every 600 m (2000') throughout length of lane closure.
7. One flashing arrow sign for each lane closed. The first flashing arrow sign shall be Type 1. All others may be either Type 1 or Type 1 1.
8. A minimum 450 m (1500') of sight distance shall be provided where possible for vehicles approaching the first flashing arrow sign. Lane closures shall not begin at the top of crest vertical curve or on a horizontal curve.
9. All cones used for night lane closures shall be fitted with reflective sleeves as specified in the specifications.
10. Portable delineators, placed at one-half the spacing indicated for traffic cones, may be used in lieu of cones for daytime closures only.
11. Unless otherwise specified in the special provisions, a minimum of 3 cones shall be placed transversely across each closed lane and shoulder at each location where a taper across a traffic lane ends and every 600 m (2000') as shown on the "Lane Closure With Partial Shoulder Use" detail. Two Type 11 barricades may be used instead of the 3 cones. The transverse alignment of the cones or barricades on the closed shoulder may be shifted from the transverse alignment to provide access to the work.
12. Unless otherwise specified in the special provisions, the 150 m (500') section of the lane closure shown along lanelines shall be used between the 300 m (1000') lane closure tapers when two or more adjacent traffic lanes are to be closed.
13. A minimum of Two Type 1 1 barricades shall be placed across each closed lane and shoulder at the location shown and every 600 m (2000') within the complete closure area. Within the complete closure area, the transverse alignment of the barricades on the closed shoulder may be shifted from the transverse alignment to provide access to the work.
14. Where specified in the special provisions, a C1 "DETOUR AHEAD" sign is to be used in place of the C19 "FREEWAY CLOSED AHEAD" sign.

LEGEND

- Traffic Cone
- Portable Sign
- Flashing Arrow Sign
- Direction of Travel
- Portable Flashing Beacon

SIGN PANEL SIZE (Min)

A	1219 mm x 1219 mm (48" x 48")
B	914 mm x 914 mm (36" x 36")
C	762 mm x 762 mm (30" x 30")

These "Standard Plans for Construction of Local Streets and Roads" contain units in two systems of measurement: International System of Units (SI or "metric") and United States Standard Measures shown in the parentheses ( ). The measurements expressed in the two systems are not necessarily equal or interchangeable. See the "Foreword" at the beginning of this publication.

REV	DATE	BY	DESCRIPTION

SCALE: NONE

WARNING: 0 1/2 1 — IF THIS BAR DOES NOT MEASURE 1" THEN DRAWING IS NOT TO SCALE

DESIGNED B. TAI
DRAWN B. TAI
CHECKED J. BERGEN

SUBMITTED BY
JOHN A. BERGEN — C31069 LICENSE NO. — 2/16/2004 DATE
STEVE J. HYLAND — C23892 LICENSE NO. — 2/16/2004 DATE

DIGALERT — DIAL TOLL FREE 1-800-642-2444 AT LEAST TWO DAYS BEFORE YOU DIG — UNDERGROUND SERVICE ALERT OF NORTHERN CALIFORNIA

LOS OSOS COMMUNITY SERVICES DISTRICT

MWH Walnut Creek, California

SUBCONSULTANT'S LOGO

LOS OSOS WASTEWATER PROJECT
TRAFFIC CONTROL PLAN
LANE AND COMPLETE CLOSURES ON FREEWAYS AND EXPRESSWAYS

SHEET BC-TC-T10A

Job No: 1481166 File: N:\Projects\los_osos\Collect_Sys\Traffic\bc-tc-t10a.dgn Plot Date: 07-FEB-2004 16:41

TYPICAL LANE CLOSURE

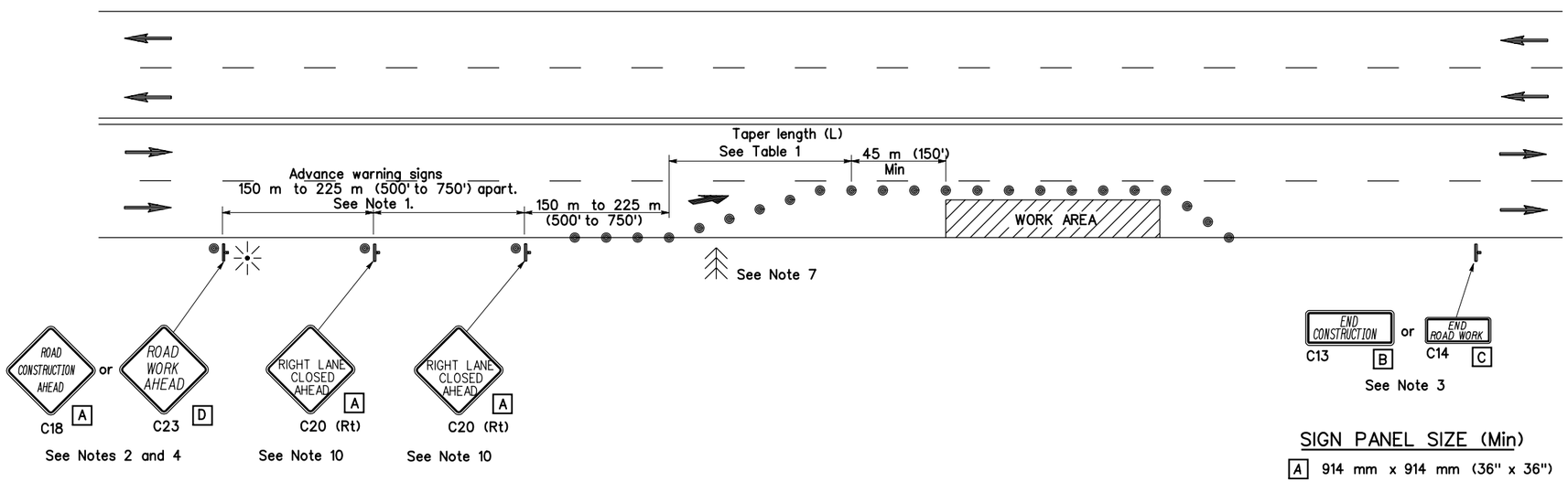

SIGN PANEL SIZE (Min)

A	914 mm x 914 mm (36" x 36")
B	1219 mm x 457 mm (48" x 18")
C	914 mm x 457 mm (36" x 18")
D	762 mm x 762 mm (30" x 30")

LEGEND

- Traffic Cone
- Portable Sign
- Direction of Travel
- Flashing Arrow Sign
- Portable Flashing Beacon

NOTES:

1. Where approach speeds are low, signs may be placed at 90 m (300') spacing, and in urban areas, closer.
2. All advance warning sign installations shall be equipped with flags for daytime closures. Flashing Beacons shall be placed at the locations indicated for nighttime closures.
3. A C13 "END CONSTRUCTION" or C14 "END ROAD WORK" sign, as appropriate, shall be placed at the end of the lane closure unless the end of work area is obvious, or ends within a larger project's limits.
4. If the C18 (or C23) sign would follow within 600 m (2000') of a stationary C18, C23, or C11 "STATE HIGHWAY CONSTRUCTION NEXT_____ MILES". use a C20 sign for the first advance warning sign.
5. All cones used for night lane closures shall be fitted with reflective sleeves as specified in the specifications.
6. Portable delineators, placed at one-half the spacing indicated for traffic cones, may be used in lieu of cones for daytime closures only.
7. Flashing arrow sign shall be either Type 1 or Type 11.
8. The maximum spacing between cones in a taper shall be approximately as shown in Table 1 and 15 m (50') maximum spacing on tangent.
9. For approach speeds over 80 km/h (50 mph), use the "Traffic Control System for Lane Closure On Freeways and Expressways" plan for lane closure details and requirements.
10. Where specified in the special provisions, a W11 "LANE REDUCTION SYMBOL" sign is to be used in place of the C20 "RIGHT LANE CLOSED AHEAD" sign.

TABLE 1

Approach Speed	* Taper Length (L)	* Number of Cones for Taper	Spacing of Cones Along Taper
0-40 km/h (0-25 mph)	38m (125')	6	7.5 m (25')±
40-65 km/h (25-40 mph)	98 m (320')	9	12 m (40')±
65-80km/h (40-50 mph)	183 m (600')	13	15 m (50')±
Over 80 km/h (50 mph)	See Note 9		

* Based on 3.6 (12') wide lane. This column is also appropriate for lane widths Less than 3.6 m (12')

These "Standard Plans for Construction of Local Streets and Roads" contain units in two systems of measurement: International System of Units (SI or "metric") and United States Standard Measures shown in the parentheses ( ). The measurements expressed in the two systems are not necessarily equal or interchangeable. See the "Foreword" at the beginning of this publication.

Plot Date: 07-FEB-2004 16:42
File: N:\Projects\los_osos\Collect_Sys\Traffic\bc-tc-t11.dgn
Job No: 1481166

REV	DATE	BY	DESCRIPTION

SCALE: NONE

WARNING: 0 1/2 1 — IF THIS BAR DOES NOT MEASURE 1" THEN DRAWING IS NOT TO SCALE

DESIGNED B. TAI
DRAWN B. TAI
CHECKED J. BERGEN

SUBMITTED BY
JOHN A. BERGEN — C31069 LICENSE NO. — 2/16/2004 DATE
STEVE J. HYLAND — C23892 LICENSE NO. — 2/16/2004 DATE

DIGALERT — DIAL TOLL FREE 1-800-642-2444 AT LEAST TWO DAYS BEFORE YOU DIG — UNDERGROUND SERVICE ALERT OF NORTHERN CALIFORNIA

LOS OSOS COMMUNITY SERVICES DISTRICT

MWH Walnut Creek, California

SUBCONSULTANT'S LOGO

LOS OSOS WASTEWATER PROJECT
TRAFFIC CONTROL PLAN
LANE CLOSURE ON
MULTILANE CONVENTIONAL HIGHWAYS 1

SHEET BC-TC-T11

LEGEND

- Traffic Cone
- Portable Sign
- Flashing Arrow Sign
- Direction of Travel
- Portable Flashing Beacon

TYPICAL CLOSING OF HALF ROADWAY

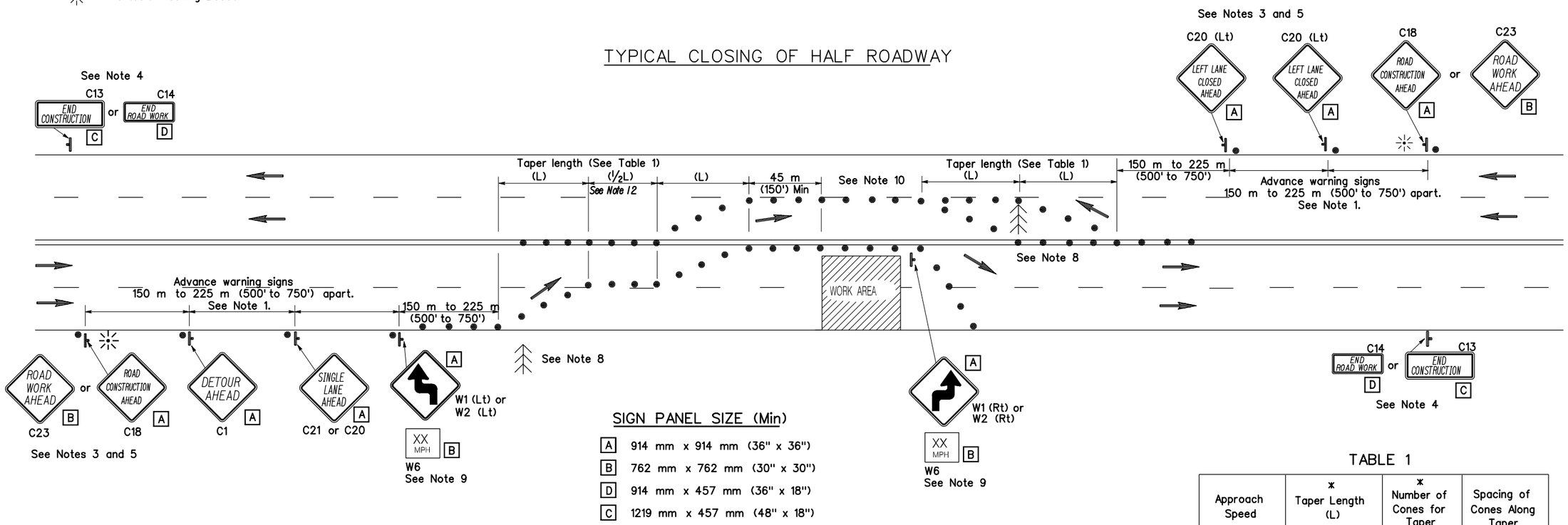

SIGN PANEL SIZE (Min)

- A 914 mm x 914 mm (36" x 36")
- B 762 mm x 762 mm (30" x 30")
- D 914 mm x 457 mm (36" x 18")
- C 1219 mm x 457 mm (48" x 18")

TABLE 1

Approach Speed	* Taper Length (L)	* Number of Cones for Taper	Spacing of Cones Along Taper
0-40 km/h (0-25 mph)	38 m (125')	6	7.5 m (25')
40-65 km/h (25-40 mph)	98 m (320')	9	12 m (40')
65-80 km/h (40-50 mph)	183 m (600')	13	15 m (50')
Over 80 km/h (50 mph)	See Note 11		

* Based on 3.6 m (12') wide lane. This column is also appropriate for lane widths less than 3.6 m (12').

NOTES:

1. Where Approach speeds are low, signs may be placed at 90 m (300') spacing and in urban areas, closer.
2. Not less than one person shall be assigned to full time maintenance of traffic control devices on all night lane closures.
3. All advance warning sign installations shall be equipped with flags for daytime closures. Flashing beacons shall be placed at the locations indicated during night lane closures.
4. A C13 "END CONSTRUCTION" or C14 "END ROAD WORK" sign, as appropriate, shall be placed at the end of the lane closure unless the end of work area is obvious, or ends within a larger project's limits.
5. If the C18 (or C23) sign would follow within 600 m (2000') of a stationary C18, C23, C 11 "STAT HIGHWAY CONSTRUCTION NEXT _____ MILES", use a C20 sign for the first advance warning sign.
6. All cones used for night lane closures shall be fitted with reflective sleeves as specified in the specifications.
7. Portable delineators, placed at one-half the spacing indicated for traffic cones, may be used in lieu of cones for daytime closures only.
8. Flashing arrow signs shall be either Type I or Type II.
9. Advisory speed will be determined by the Engineer. The W6 Sign will not be required when advisory speed is more than the posted or maximum speed limit.
10. The maximum spacing between cones within a taper shall be approximately as shown in Table 1 and the maximum spacing on tangent shall be 15 m (50').
11. For approach speeds over 80 km/h (50 mph), use the "Traffic Control System For Lane Closure On Freeways And Expressways" plan for lane closure details and requirements.
12. Unless otherwise specified in the special provisions, the (1/2L) shown between the two (L) lane closure tapers shall be used.

These "Standard Plans for Construction of Local Streets and Roads" contain units in two systems of measurement: International System of Units (SI or "metric") and United States Standard Measures shown in the parentheses ( ). The measurements expressed in the two systems are not necessarily equal or interchangeable. See the "Foreword" at the beginning of this publication.

REV	DATE	BY	DESCRIPTION

SCALE: NONE

WARNING: 0 1/2 1 — IF THIS BAR DOES NOT MEASURE 1" THEN DRAWING IS NOT TO SCALE

DESIGNED B. TAI
DRAWN B. TAI
CHECKED J. BERGEN

SUBMITTED BY
JOHN A. BERGEN — C31069 LICENSE NO. — 2/16/2004 DATE
STEVE J. HYLAND — C23892 LICENSE NO. — 2/16/2004 DATE

DIGALERT — DIAL TOLL FREE 1-800-642-2444 AT LEAST TWO DAYS BEFORE YOU DIG — UNDERGROUND SERVICE ALERT OF NORTHERN CALIFORNIA

LOS OSOS COMMUNITY SERVICES DISTRICT

MWH Walnut Creek, California

SUBCONSULTANT'S LOGO

LOS OSOS WASTEWATER PROJECT
TRAFFIC CONTROL PLAN
LANE CLOSURE ON
MULTILANE CONVENTIONAL HIGHWAYS 2

SHEET BC-TC-T12

Job No: 1481166 File: N:\Projects\los_osos\Collect_Sys\Traffic\bc-tc-t12.dgn Plot Date: 07-FEB-2004 16:42

TYPICAL LANE CLOSURE WITH REVERSIBLE CONTROL

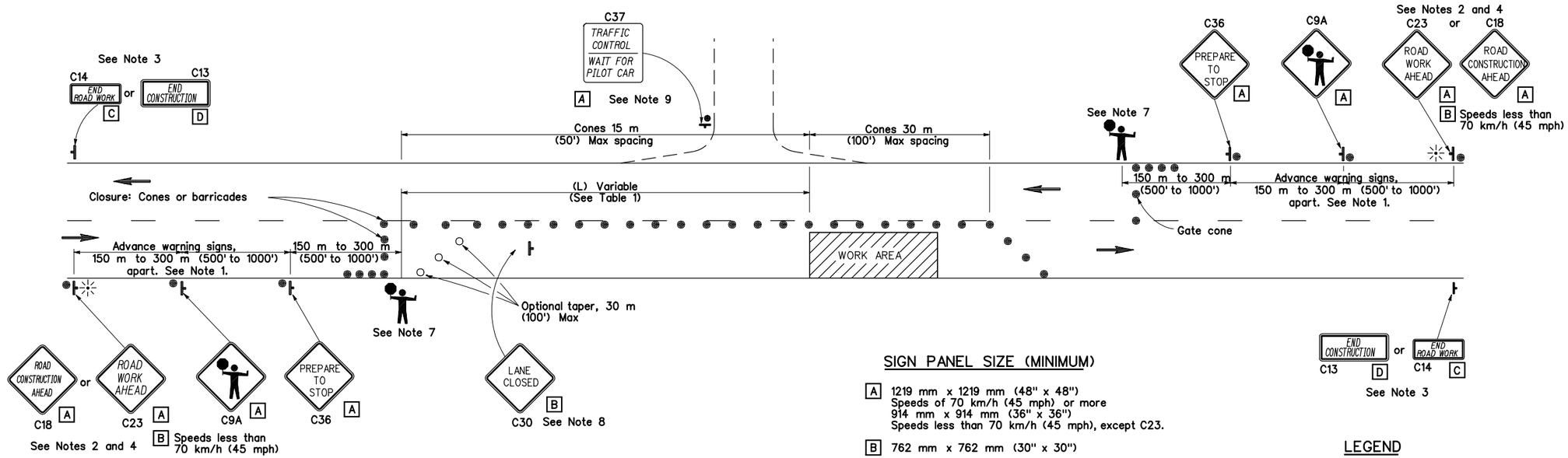

SIGN PANEL SIZE (MINIMUM)

- A 1219 mm x 1219 mm (48" x 48")
  Speeds of 70 km/h (45 mph) or more
  914 mm x 914 mm (36" x 36")
  Speeds less than 70 km/h (45 mph), except C23.
- B 762 mm x 762 mm (30" x 30")
- C 914 mm x 457 mm (36" x 18")
- D 1219 mm x 457 mm (48" x 18")

LEGEND

- Traffic Cone
- Traffic Cone (Optional Taper)
- Portable Sign
- Direction of Travel
- Portable Flashing Beacon
- Flagger

NOTES

1. Where approach speeds are low, signs may be placed at 90 m (300') spacing and in urban areas, closer.
2. All advance warning sign installations shall be equipped with flags for daytime closures. Flashing beacons shall be placed at the locations indicated during night lane closures.
3. A C13 "END CONSTRUCTION" or C14 "END ROAD WORK" sign, as appropriate, shall be placed at the end of the lane control unless the end of work area is obvious, or ends within a larger project's limits.
4. If the C18 (or C23) sign would follow within 600 m (2000') of a stationary C18, C23, or C11 "STATE HIGHWAY CONSTRUCTION NEXT _____ MILES", use a C9A sign for the first advance warning sign.
5. All cones used for night lane closures shall be fitted with reflective sleeves as specified in the specifications.
6. Portable delineators, placed at one-half the spacing indicated for traffic cones, may be used in lieu of cones for daytime closures only.
7. Additional advance flaggers may be required. Flagger should stand in a conspicuous place, be visible to approaching traffic as well as approaching vehicles after the first vehicle has stopped. Nighttime flagger station shall be illuminated as provided in the current edition of the "Manual of Traffic Controls" published by the State of California, Department of Transportation. Place a minimum of four cones at 15 m (50') intervals in advance of flagger station as shown.
8. Place C30 "LANE CLOSED" sign at 150 to 300 m (500' to 1000') intervals throughout extended work areas. They are optional if the work area is visible from the flagger station.
9. When a pilot car is used, place a C37 "TRAFFIC CONTROL-WAIT FOR PILOT CAR" sign at all intersections within traffic control area. Signs shall be clean and visible at all times.

TABLE 1

Approach Speed	* (L)
0-50 km/h (0-30 mph)	60 m (200')
50-70 km/h (30-45 mph)	90 m (310')
over 70 km/h (45 mph)	150 m (500')

* Increase by 20 percent on sustained downgrades steeper than 3 percent and longer than 1.6 km (one mile).

These "Standard Plans for Construction of Local Streets and Roads" contain units in two systems of measurement: International System of Units (SI or "metric") and United States Standard Measures shown in the parentheses ( ). The measurements expressed in the two systems are not necessarily equal or interchangeable. See the "Foreword" at the beginning of this publication.

REV	DATE	BY	DESCRIPTION

SCALE: NONE

WARNING: 0 1/2 1 — IF THIS BAR DOES NOT MEASURE 1" THEN DRAWING IS NOT TO SCALE

DESIGNED B. TAI
DRAWN B. TAI
CHECKED J. BERGEN

SUBMITTED BY
JOHN A. BERGEN — C31069 LICENSE NO. — 2/16/2004 DATE
STEVE J. HYLAND — C23892 LICENSE NO. — 2/16/2004 DATE

DIGALERT — DIAL TOLL FREE 1-800-642-2444 AT LEAST TWO DAYS BEFORE YOU DIG — UNDERGROUND SERVICE ALERT OF NORTHERN CALIFORNIA

LOS OSOS COMMUNITY SERVICES DISTRICT

MWH Walnut Creek, California

SUBCONSULTANT'S LOGO

LOS OSOS WASTEWATER PROJECT
TRAFFIC CONTROL PLAN
LANE CLOSURE ON TWO LANE CONVENTIONAL HIGHWAYS

SHEET BC-TC-T13

Job No: 1481166 File: N:\Projects\los_osos\Collect_Sys\Traffic\bc-tc-t13.dgn Plot Date: 07-FEB-2004 16:42

TYPICAL RAMP CLOSURES

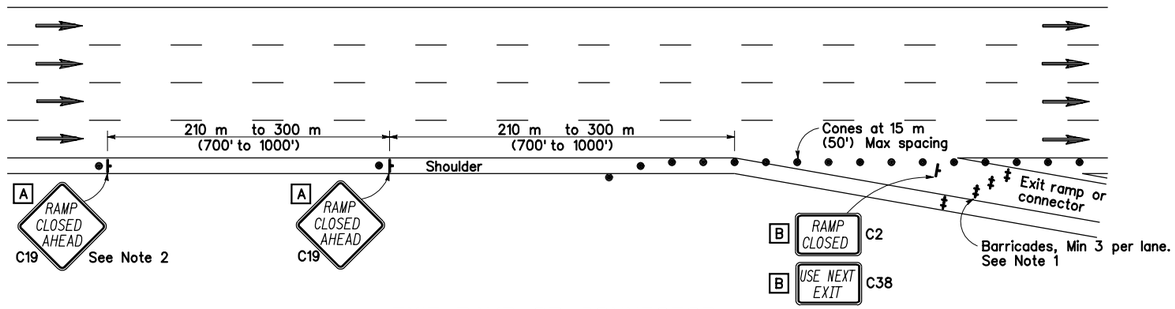

EXIT RAMP OR CONNECTOR

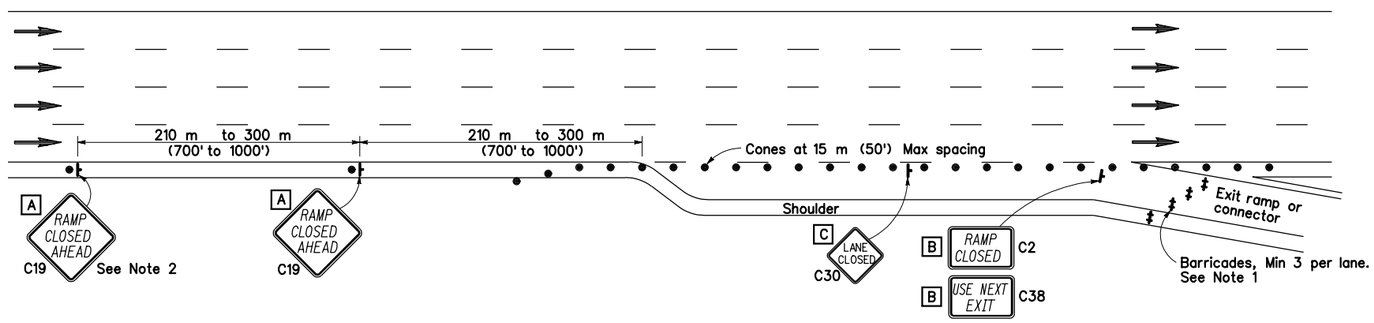

EXIT RAMP OR CONNECTOR WITH ADDITIONAL LANE

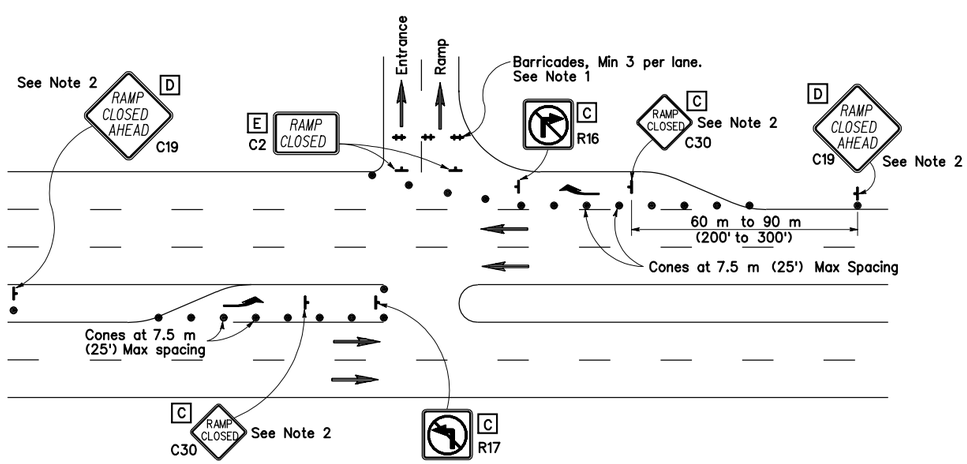

ENTRANCE RAMP WITH TURNING POCKETS

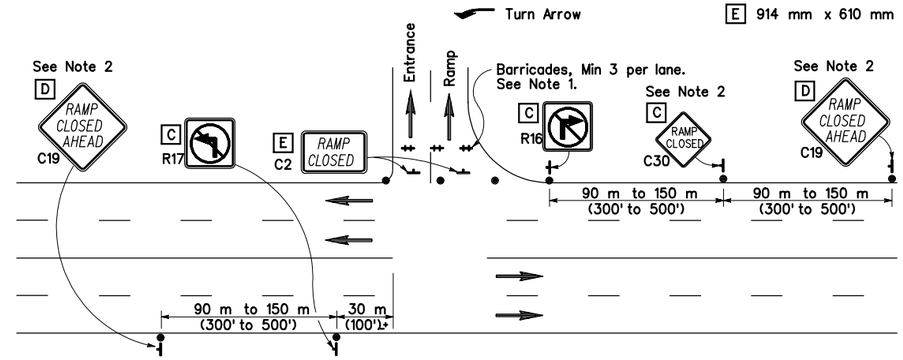

ENTRANCE RAMP WITHOUT TURNING POCKETS

NOTES

1. Barricades shall be Type 1, 11, or 111 for closures lasting one week or less and Type 111 for closures lasting longer than one week.
2. In lieu of placing the C19 "RAMP CLOSED AHEAD" and C30 "RAMP CLOSED" signs. black on orange overlay plates with the word "CLOSED" may be mounted, as directed by the Engineer, on all guide signs that refer to the closed ramp. The letter size on the overlay shall be the same as the guide sign.
3. All advance warning sign installations shall be equipped with flags for daytime closures.
4. All cones used for night lane closures shall be fitted with reflective sleeves as specified in the specifications.
5. Portable delineators, placed at one-half the spacing indicated for traffic cones, may be used in lieu of cones for daytime ramp closures only.
6. During nighttime ramp closures, at least one person shall be assigned full time for maintenance of traffic control devices.

LEGEND

- Traffic Cone
- Sign
- Barricades
- Direction of Travel
- Turn Arrow

SIGN PANEL SIZE (Min)

A	1219 mm x 1219 mm	(48" x 48")
B	1219 mm x 762 mm	(48" x 30")
C	762 mm x 762 mm	(30" x 30")
D	914 mm x 914 mm	(36" x 36")
E	914 mm x 610 mm	(36" x 24")

These "Standard Plans for Construction of Local Streets and Roads" contain units in two systems of measurement: International System of Units (SI or "metric") and United States Standard Measures shown in the parentheses ( ). The measurements expressed in the two systems are not necessarily equal or interchangeable. See the "Foreword" at the beginning of this publication.

Plot Date: 07-FEB-2004 16:42
File: N:\Projects\los_osos\Collect_Sys\Traffic\bc-tc-t14.dgn
Job No: 1481166

REV	DATE	BY	DESCRIPTION

SCALE: NONE

WARNING: 0 1/2 1 — IF THIS BAR DOES NOT MEASURE 1" THEN DRAWING IS NOT TO SCALE

DESIGNED B. TAI
DRAWN B. TAI
CHECKED J. BERGEN

SUBMITTED BY
JOHN A. BERGEN — C31069 LICENSE NO. — 2/16/2004 DATE
STEVE J. HYLAND — C23892 LICENSE NO. — 2/16/2004 DATE

DIGALERT — DIAL TOLL FREE 1-800-642-2444 AT LEAST TWO DAYS BEFORE YOU DIG — UNDERGROUND SERVICE ALERT OF NORTHERN CALIFORNIA

LOS OSOS COMMUNITY SERVICES DISTRICT

MWH Walnut Creek, California

SUBCONSULTANT'S LOGO

LOS OSOS WASTEWATER PROJECT
TRAFFIC CONTROL PLAN
RAMP CLOSURE

SHEET BC-TC-T14

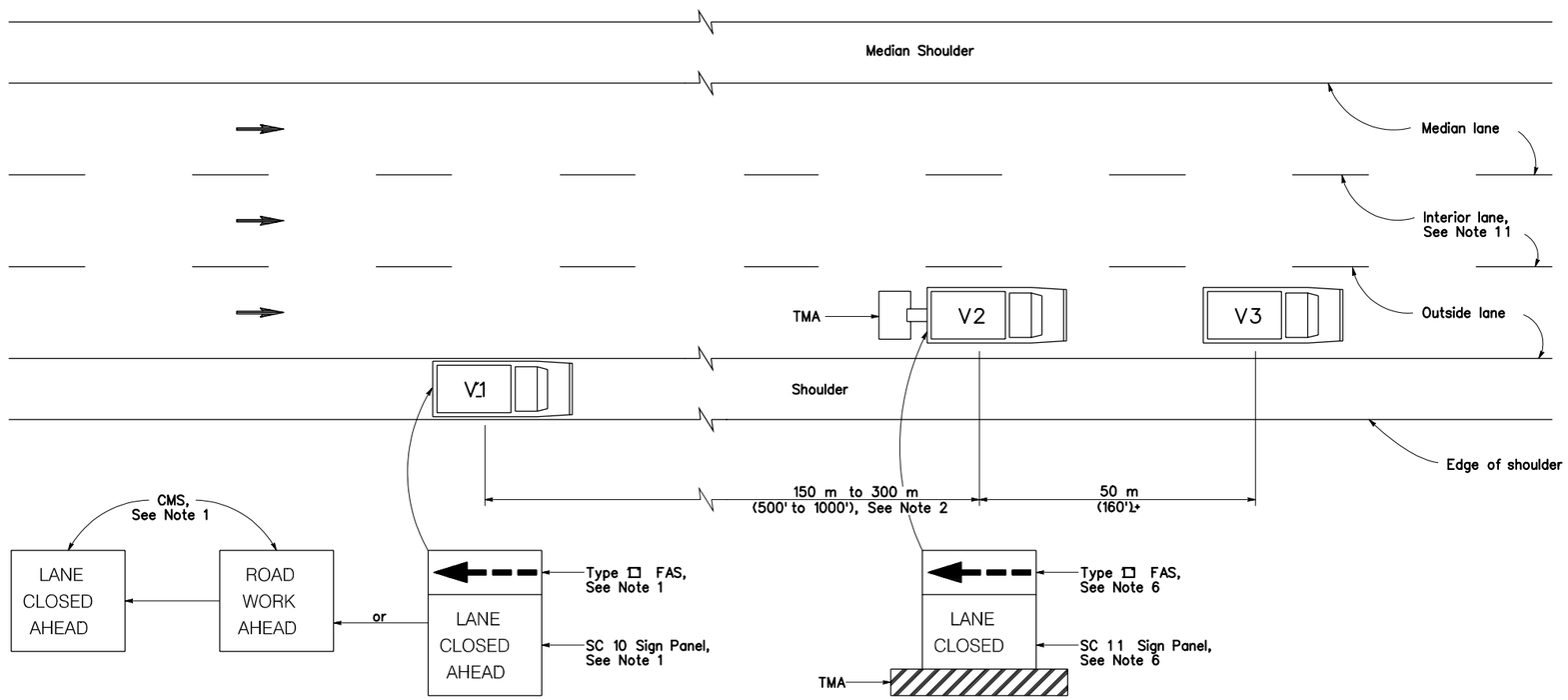

MOVING LANE CLOSURE ON MEDIAN OR OUTSIDE LANE OF MULTILANE HIGHWAYS

LEGEND

V1	Sign Vehicle
V2	Shadow Vehicle
V3	Work/Application Vehicle
FAS	Flashing Arrow Sign
CMS	Changeable Message Sign
TMA	Truck-Mounted Attenuator
→	Direction of Travel

NOTES

1. Either the SC 10 sign panel shown or a changeable message sign shall be mounted on the rear of sign vehicle V1. A Type 1 flashing arrow sign shall be mounted on the rear of sign vehicle V1 and used with the SC 10 sign panel. A Type 11 flashing arrow sign will not be required with the changeable message sign provided the flashing arrow sign symbol may be displayed on the changeable message sign board. The changeable message sign shall be sequenced to show the "ROAD WORK AHEAD" message first, followed by the "LANE CLOSED AHEAD" message and then the flashing arrow sign symbol. For median lane closure, the flashing arrow sign symbol shall be reversed with the arrowhead on the right.

2. If traffic queues develop, sign vehicle V1 should be positioned upstream from the end of queue. Sign vehicle V1 shall be positioned where highly visible when shoulders are not available.

3. A minimum sight distance of 450 m (1500') should be provided in advance of sign vehicle V1.

4. Sign vehicle V1 should remain at the beginning of horizontal or vertical curves until the other vehicles (V2 and V3) are far enough beyond the curve to resume the minimum sight distance of 450 m (1500').

5. Vehicle-mounted sign panels shall be Type 11 or 1V reflective sheeting, black on white or black on orange with 150 mm (6") minimum series D letters per Caltrans sign specifications.

6. Gross Vehicle Weight of shadow vehicle V2 shall be a minimum of 9000 kilograms (20,000 pounds) and shall be equipped with a truck-mounted attenuator (TMA). The sign panel shown and a Type 11 flashing arrow sign shall be mounted on the rear of shadow vehicle V2. For median lane closure, the flashing arrow sign symbol shall be reversed with the arrowhead on the right.

7. All vehicles used for lane closures shall be equipped with two-way radios and the vehicle operators shall maintain communication during the work or application operation.

8. All vehicles shall be equipped with flashing or rotating amber lights.

9. Where sufficient shoulder width is not available, sign vehicle V1 may encroach into the traffic lane staying as close to the edge of shoulder as practicable. When operating in this mode, both V1 and V2 shall be equipped with a truck-mounted attenuator (TMA) and Gross Vehicle Weight of V1 and V2 shall be a minimum of 9000 kilograms (20,000 pounds) each.

10. Where workers would be on foot in the work area, a stationary type lane closure (Standard Plan T10, T11, etc., as applicable) shall be used instead of this plan.

11. For moving lane closure on interior lane of multilane highways, see Standard Plan T16.

These "Standard Plans for Construction of Local Streets and Roads" contain units in two systems of measurement: International System of Units (SI or "metric") and United States Standard Measures shown in the parentheses ( ). The measurements expressed in the two systems are not necessarily equal or interchangeable. See the "Foreword" at the beginning of this publication.

Job No: 1481166 File: N:\Projects\los_osos\Collect_Sys\Traffic\bc-tc-t15.dgn Plot Date: 07-FEB-2004 16:42

REV	DATE	BY	DESCRIPTION

SCALE: NONE

WARNING: 0 1/2 1 — IF THIS BAR DOES NOT MEASURE 1" THEN DRAWING IS NOT TO SCALE

DESIGNED B. TAI
DRAWN B. TAI
CHECKED J. BERGEN

SUBMITTED BY
JOHN A. BERGEN — C31069 LICENSE NO. — 2/16/2004 DATE
STEVE J. HYLAND — C23892 LICENSE NO. — 2/16/2004 DATE

DIGALERT — DIAL TOLL FREE 1-800-642-2444 AT LEAST TWO DAYS BEFORE YOU DIG — UNDERGROUND SERVICE ALERT OF NORTHERN CALIFORNIA

LOS OSOS COMMUNITY SERVICES DISTRICT

MWH Walnut Creek, California

SUBCONSULTANT'S LOGO

LOS OSOS WASTEWATER PROJECT
TRAFFIC CONTROL PLAN
MOVING LANE CLOSURE ON MULTILANE HIGHWAYS 1

SHEET BC-TC-T15

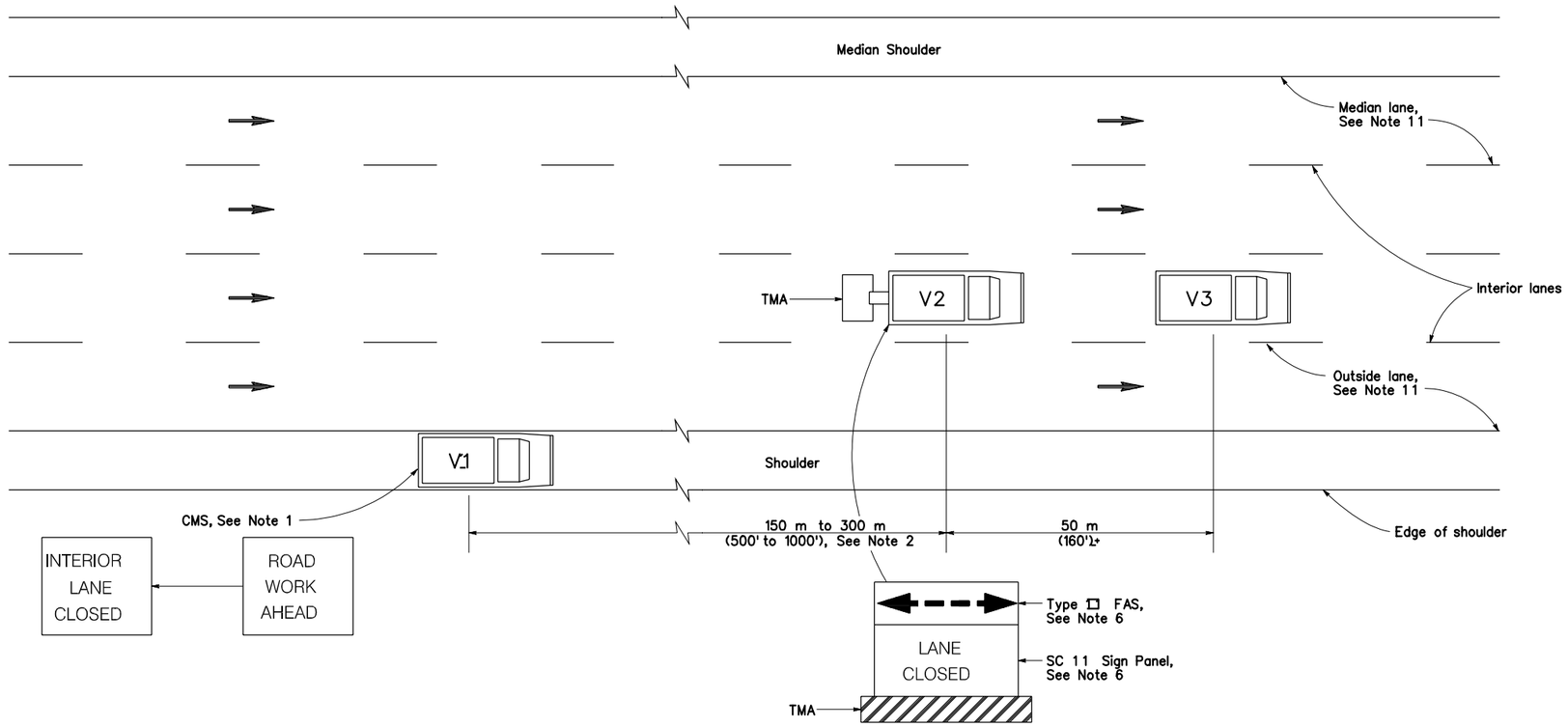

MOVING LANE CLOSURE ON INTERIOR LANE OF MULTILANE HIGHWAYS

LEGEND

V1	Sign Vehicle
V2	Shadow Vehicle
V3	Work/Application Vehicle
FAS	Flashing Arrow Sign
CMS	Changeable Message Sign
TMA	Truck-Mounted Attenuator
→	Direction of Travel

NOTES

1. A changeable message sign shall be mounted on the rear of sign vehicle V1. The changeable message sign shall be sequenced to show the "ROAD WORK AHEAD" message first, followed by the "INTERIOR LANE CLOSED" message. The message "CENTER LANE CLOSED" may be used in place of the "INTERIOR LANE CLOSED" message.

2. If traffic queues develop, sign vehicle V1 should be positioned upstream from the end of queue. Sign vehicle V1 shall be positioned where highly visible when shoulders are not available.

3. A minimum sight distance of 450 m (1500') should be provided in advance of sign vehicle V1.

4. Sign vehicle V1 should remain at the beginning of horizontal or vertical curves until the other vehicles (V2 and V3) are far enough beyond the curve to resume the minimum sight distance of 450 m (1500').

5. Vehicle-mounted sign panels shall be Type 111 or 1V reflective sheeting, black on white or black on orange with 150 mm (6") minimum series D letters per Caltrans sign specifications.

6. Gross Vehicle Weight of shadow vehicle V2 shall be a minimum of 9000 kilograms (20,000 pounds) and shall be equipped with a truck-mounted attenuator (TMA). The sign panel shown and a Type 11 flashing arrow sign shall be mounted on the rear of shadow vehicle V2. For median lane closure, the flashing arrow sign symbol shall be reversed with the arrowhead on the right.

7. All vehicles used for lane closures shall be equipped with two-way radios and the vehicle operators shall maintain communication during the work or application operation.

8. All vehicles shall be equipped with flashing or rotating amber lights.

9. Where sufficient shoulder width is not available, sign vehicle V1 may encroach into the traffic lane staying as close to the edge of shoulder as practicable. When operating in this mode, both V1 and V2 shall be equipped with a truck-mounted attenuator (TMA) and Gross Vehicle Weight of V1 and V2 shall be a minimum of 9000 kilograms (20,000 pounds) each.

10. Where workers would be on foot in the work area, a stationary type lane closure (Standard Plan T10, T11, etc., as applicable) shall be used instead of this plan.

11. For moving lane closure on median or outside lanes of multilane highways, see Standard Plan T15.

These "Standard Plans for Construction of Local Streets and Roads" contain units in two systems of measurement: International System of Units (SI or "metric") and United States Standard Measures shown in the parentheses ( ). The measurements expressed in the two systems are not necessarily equal or interchangeable. See the "Foreword" at the beginning of this publication.

Job No: 1481166 File: N:\Projects\los_osos\Collect_Sys\Traffic\bc-tc-t16.dgn Plot Date: 07-FEB-2004 16:42

REV	DATE	BY	DESCRIPTION

SCALE: NONE

WARNING: 0 1/2 1 — IF THIS BAR DOES NOT MEASURE 1" THEN DRAWING IS NOT TO SCALE

DESIGNED B. TAI
DRAWN B. TAI
CHECKED J. BERGEN

SUBMITTED BY
JOHN A. BERGEN — C31069 LICENSE NO. — 2/16/2004 DATE
STEVE J. HYLAND — C23892 LICENSE NO. — 2/16/2004 DATE

DIGALERT — DIAL TOLL FREE 1-800-642-2444 AT LEAST TWO DAYS BEFORE YOU DIG — UNDERGROUND SERVICE ALERT OF NORTHERN CALIFORNIA

LOS OSOS COMMUNITY SERVICES DISTRICT

MWH Walnut Creek, California

SUBCONSULTANT'S LOGO

LOS OSOS WASTEWATER PROJECT
TRAFFIC CONTROL PLAN
MOVING LANE CLOSURE ON MULTILANE HIGHWAYS 2

SHEET BC-TC-T16

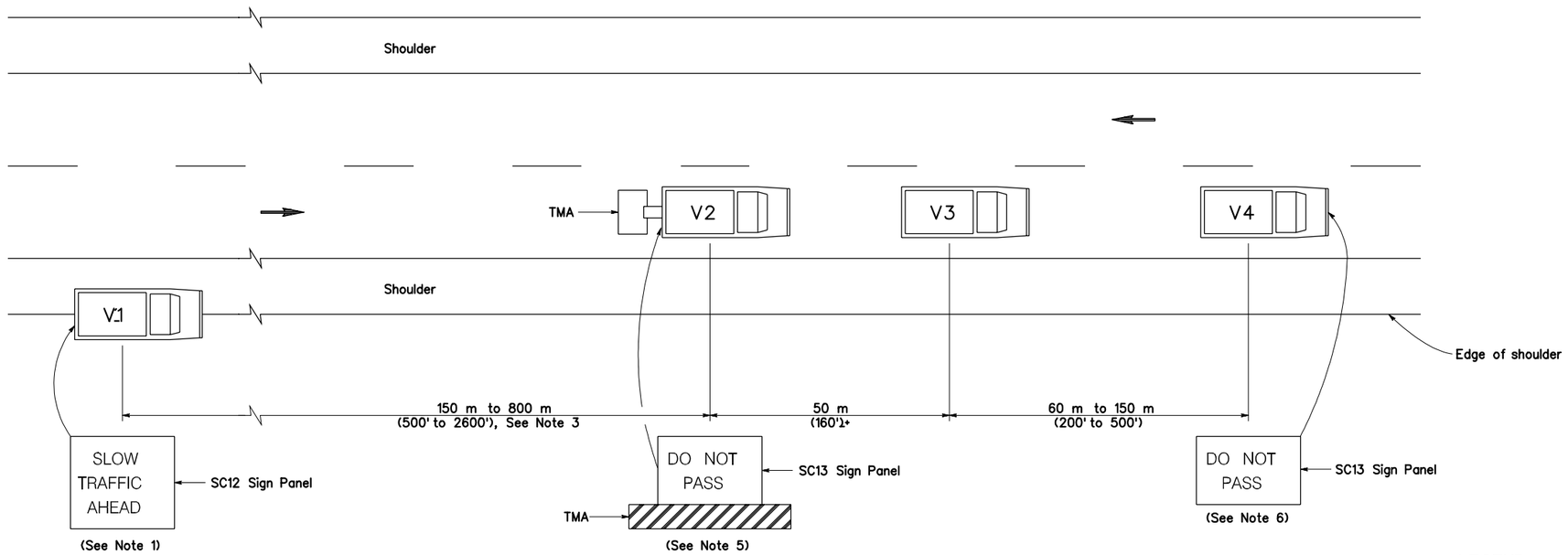

LEGEND

V1	Sign Vehicle
V2	Shadow Vehicle
V3	Work/Application Vehicle
V4	Sign Vehicle
TMA	Truck-Mounted Attenuator
→	Direction of Travel

NOTES

1. Either the sign panel shown or a changeable message sign which can display the "SLOW TRAFFIC AHEAD" message shall be mounted on the rear of sign vehicle V1.
2. Sign vehicle V1 should be positioned where highly visible when shoulders are not available.
3. If traffic queues develop, sign vehicle V1 should be positioned upstream from the end of queue.
4. Vehicle-mounted sign panels shall be Type 111 or 1V reflective sheeting, black on white or black on orange with 150 mm (6") minimum series D letters per Caltrans sign specifications.
5. Gross Vehicle Weight of shadow vehicle shall be a minimum of 9000 kilograms (20,000 pounds) and shall be equipped with a truck-mounted attenuator (TMA). The sign panel shown shall be mounted on the rear of shadow vehicle V2. The message "LANE CLOSED" may be used in place of the "DO NOT PASS" message.
6. The sign panel shown shall be mounted on the front of sign vehicle V4, facing opposing traffic. The message "CAUTION" may be used in place of the "DO NOT PASS" message.
7. All vehicles shall be equipped with flashing or rotating amber lights.
8. Sign vehicle V4 will not be required when the work and vehicles V2 and V3 are 0.6 m (2') or more from the centerline of the highway during the work or application operations.
9. All vehicles used for lane closures shall be equipped with two-way radios and the vehicle operators shall maintain communication during the work or application operation.
10. This plan shall not be used where workers would be on foot in the work area. Use a stationary type lane closure (Standard Plan T13) for this condition.

These "Standard Plans for Construction of Local Streets and Roads" contain units in two systems of measurement: International System of Units (SI or "metric") and United States Standard Measures shown in the parentheses ( ). The measurements expressed in the two systems are not necessarily equal or interchangeable. See the "Foreword" at the beginning of this publication.

Job No: 1481166 File: N:\Projects\los_osos\Collect_Sys\Traffic\bc-tc-t17.dgn Plot Date: 07-FEB-2004 16:43

REV	DATE	BY	DESCRIPTION

SCALE: NONE

WARNING: 0 1/2 1 — IF THIS BAR DOES NOT MEASURE 1" THEN DRAWING IS NOT TO SCALE

DESIGNED B. TAI
DRAWN B. TAI
CHECKED J. BERGEN

SUBMITTED BY
JOHN A. BERGEN — C31069 LICENSE NO. — 2/16/2004 DATE
STEVE J. HYLAND — C23892 LICENSE NO. — 2/16/2004 DATE

DIGALERT — DIAL TOLL FREE 1-800-642-2444 AT LEAST TWO DAYS BEFORE YOU DIG — UNDERGROUND SERVICE ALERT OF NORTHERN CALIFORNIA

LOS OSOS COMMUNITY SERVICES DISTRICT

MWH Walnut Creek, California

SUBCONSULTANT'S LOGO

LOS OSOS WASTEWATER PROJECT
TRAFFIC CONTROL PLAN
MOVING LANE CLOSURE
ON TWO LANE HIGHWAYS

SHEET BC-TC-T17

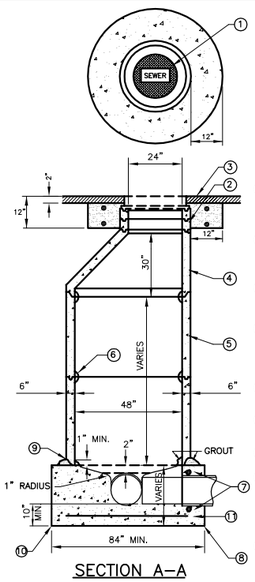

1. COVER, MANHOLE FRAMES AND COVER SHALL HAVE A 24" CLEAR OPENING AND A SEALED BLIND PICKHOLE (PINKERTON A-640 OR APPROVED EQUAL). THE COVER SHALL BE LETTERED "SEWER". COVER TO BE RATTLE-FREE WITHOUT THE USE OF SEALANT.
2. ADJUSTMENT, RINGS SHALL BE 3" OR 6". TOP OF CONE TO TOP OF FRAME SHALL NOT EXCEED 15". GRADE RINGS AND MANHOLE FRAME SHALL BE SEALED AT EVERY JOINT WITH BUTYL RUBBER (CONSEAL CS-102 OR EQUAL) AND GROUTED ON THE INSIDE.
3. CONCRETE COLLAR, COLLAR SHALL BE CLASS A CONCRETE. THE COLLAR SHALL BE ALLOWED TO CURE 48 HOURS PRIOR TO ANY TRAFFIC USE. REINF WITH 2-#4 HOOPS AND #4 VERTS.
4. CONE, CONE SHALL BE ECCENTRIC AND CONFORM TO THE REQUIREMENTS FOR RISERS. THE STRAIGHT SIDE OF THE CONE SHALL BE POSITIONED OVER THE MANHOLE OUTLET. CONCENTRIC CONES MAY BE USED ONLY IN SPECIAL CASES WITH THE PRIOR WRITTEN CONSENT OF THE ENGINEER.
5. MANHOLE RISERS, MANHOLE RISERS SHALL BE 48" IN DIAMETER, PRECAST CONCRETE CONFORMING TO ASTM C478-94 FOR PRECAST REINFORCED MANHOLE SECTIONS.
6. JOINTS, JOINTS SHALL BE SET WITH PREFORMED MASTIC SEALANT (RAMNEK, KENT SEAL, OR EQUAL). INSIDE OF JOINTS SHALL BE GROUTED WITH NON-SHRINK GROUT.
7. WATER STOPS, WHEN PVC USED, I.E. ADAPTER RINGS.
8. BASE, MANHOLE BASE SHALL BE 10" DEEP MINIMUM. CLASS "B" CONCRETE SHALL BE USED AND SHALL NOT FALL OVER 6 FEET UNLESS AN "ELEPHANTS TRUNK" OR AN "ADJUSTABLE PIPE" IS USED. CONCRETE WORK IN CHANNEL SHALL BE A STEEL TROWEL FINISH AND SHELF AREAS SHALL BE A BROOM FINISH. BASE SHALL BE MONOLITHICALLY PLACED.
9. BASE, USE STEEL IMPRESSION RING IN WET CONCRETE TO FORM GROOVE FOR FIRST RISER SECTION. SET FIRST RISER SECTION ON PREFORMED MASTIC SEALANT.
10. IN GROUNDWATER, PROVIDE 6" OF CRUSHED ROCK WRAPPED IN GEOTEXTILE BENEATH MANHOLE BASE. OTHERWISE SCARIFY AND RECOMPACT NATIVE MATERIAL TO 95%.
11. MANHOLES 10 FEET AND GREATER IN DEPTH SHALL HAVE #4 AT 12" E.W. REINFORCING.

STANDARD SEWER MANHOLE C-100

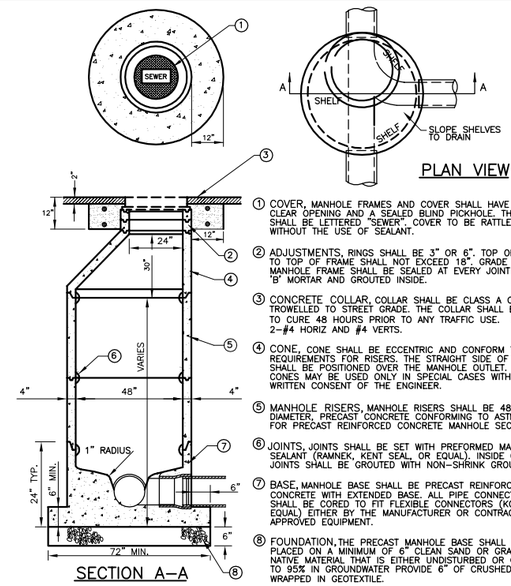

1. COVER, MANHOLE FRAMES AND COVER SHALL HAVE A 24" CLEAR OPENING AND A SEALED BLIND PICKHOLE. THE COVER SHALL BE LETTERED "SEWER". COVER TO BE RATTLE FREE WITHOUT THE USE OF SEALANT.
2. ADJUSTMENTS, RINGS SHALL BE 3" OR 6". TOP OF CONE TO TOP OF FRAME SHALL NOT EXCEED 18". GRADE RINGS AND MANHOLE FRAME SHALL BE SEALED AT EVERY JOINT WITH CLASS "B" MORTAR AND GROUTED INSIDE.
3. CONCRETE COLLAR, COLLAR SHALL BE CLASS A CONCRETE. TROWELLED TO STREET GRADE. THE COLLAR SHALL BE ALLOWED TO CURE 48 HOURS PRIOR TO ANY TRAFFIC USE. REINF WITH 2-#4 HORIZ AND #4 VERTS.
4. CONE, CONE SHALL BE ECCENTRIC AND CONFORM TO THE REQUIREMENTS FOR RISERS. THE STRAIGHT SIDE OF THE CONE SHALL BE POSITIONED OVER THE MANHOLE OUTLET. CONCENTRIC CONES MAY BE USED ONLY IN SPECIAL CASES WITH THE PRIOR WRITTEN CONSENT OF THE ENGINEER.
5. MANHOLE RISERS, MANHOLE RISERS SHALL BE 48" IN DIAMETER, PRECAST CONCRETE CONFORMING TO ASTM C478-94 FOR PRECAST REINFORCED CONCRETE MANHOLE SECTIONS.
6. JOINTS, JOINTS SHALL BE SET WITH PREFORMED MASTIC SEALANT (RAMNEK, KENT SEAL, OR EQUAL). INSIDE OF JOINTS SHALL BE GROUTED WITH NON-SHRINK GROUT.
7. BASE, MANHOLE BASE SHALL BE PRECAST REINFORCED CLASS B CONCRETE WITH EXTENDED BASE. ALL PIPE CONNECTIONS SHALL BE CORED TO FIT FLEXIBLE CONNECTORS (KOR-N-SEAL OR EQUAL) EITHER BY THE MANUFACTURER OR CONTRACTOR USING APPROVED EQUIPMENT.
8. FOUNDATION, THE PRECAST MANHOLE BASE SHALL BE PLACED ON A MINIMUM OF 6" CLEAN SAND OR GRAVEL OVER NATIVE MATERIAL THAT IS EITHER UNDISTURBED OR COMPACTED TO 95% IN GROUNDWATER PROVIDE 6" OF CRUSHED ROCK WRAPPED IN GEOTEXTILE.

PRE-CAST BASE SEWER MANHOLE C-101

1. DETAILS NOT SHOWN SHALL BE IN ACCORDANCE WITH LOCSD DRAWING C-100.
2. DROP MANHOLES MAY ONLY BE USED WHEN SHOWN OR WITH SPECIAL PERMISSION FROM THE DISTRICT ENGINEER.
3. PIPE AND FITTINGS SHALL BE PVC SDR 35 UNLESS OTHERWISE APPROVED BY THE DISTRICT ENGINEER.
4. BASE, USE STEEL IMPRESSION RING IN WET CONCRETE TO FORM GROOVE FOR FIRST RISER SECTION. SET FIRST RISER SECTION ON PREFORMED MASTIC SEALANT.

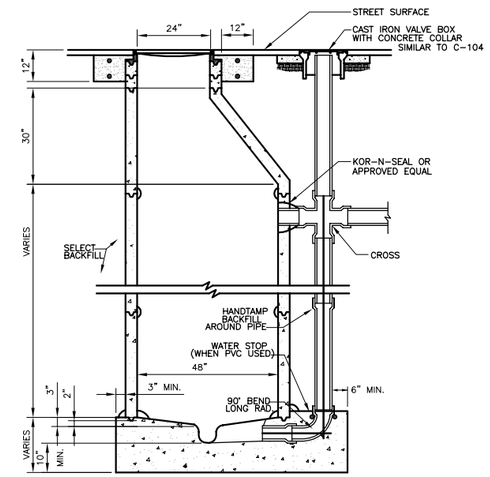

SEWER DROP MANHOLE C-102

1. DETAILS NOT SHOWN SHALL BE IN ACCORDANCE WITH LOCSD DRAWING C-100.
2. INVERT ELEVATION DIFFERENCE = 30" MAX. FOR GREATER USE C-102
3. PIPE AND FITTINGS SHALL BE PVC SDR 35 UNLESS OTHERWISE APPROVED BY THE DISTRICT ENGINEER.
4. BASE, USE STEEL IMPRESSION RING IN WET CONCRETE TO FORM GROOVE FOR FIRST RISER SECTION. SET FIRST RISER SECTION ON PREFORMED MASTIC SEALANT.
4. MANHOLE CHANNEL SHALL BE CONSTRUCTED SIMILAR TO C-100.

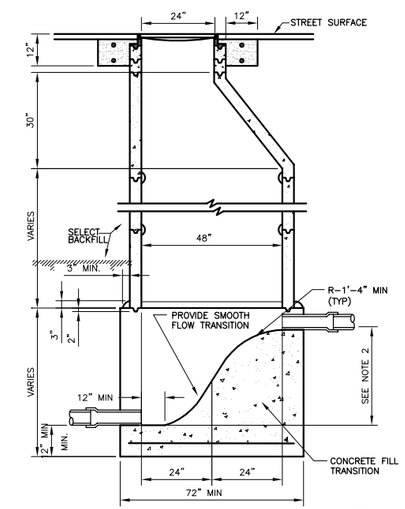

SEWER BEAVER SLIDE MANHOLE C-102A

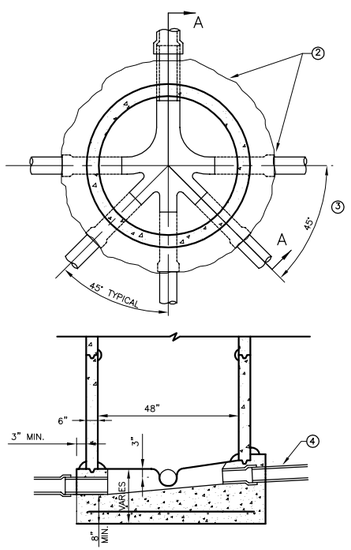

1. FOR DETAILS NOT SHOWN ON THIS DRAWING - SEE DRAWING C-100 OR C-101.
2. NO CONNECTIONS ARE ALLOWED IN THE DOWNSTREAM HALF OF THE MANHOLE.
3. A MAXIMUM OF 5 SIDE SEWER CONNECTIONS MAY BE MADE TO THE MANHOLE.
4. SIDE SEWERS SHALL BE RAISED TO MATCH THE SOFFIT OF THE OUTLET PIPE, OR TO PROVIDE 2" OF THE SLOPE IN THE MANHOLE, WHICHEVER IS HIGHER.

CUL-DE-SAC SEWER MANHOLE C-103

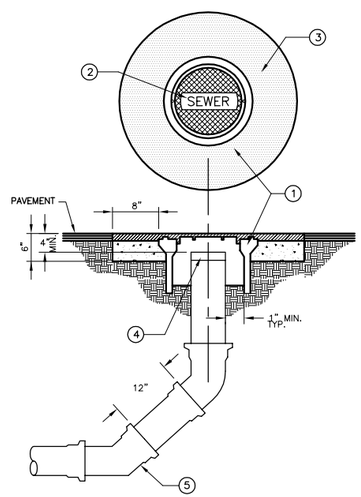

1. TRAFFIC VALVE WELL AND COVER: CHRISTY G-5 FOR 4" PIPE, AND CHRISTY G-12 FOR LARGER DIAMETER PIPES, SAME SIZE AS MAIN RECOMMENDED. BE SURE CLEANING EQUIPMENT WILL PASS THROUGH.
2. TRAFFIC LID MARKED "SEWER".
3. CLASS A CONCRETE COLLAR, TROWELLED TO STREET GRADE. ALLOW TO CURE 48 HOURS PRIOR TO TRAFFIC USE.
4. REMOVABLE CAP OR PLUG.
5. 2 - 45° BENDS SPACED 12 INCHES APART. 22 1/2° OR SWEEP IS PREFERABLE. ALL PIPES SHALL MATCH SEWER MAIN DIAMETER.

SEWER CLEANOUT C-104

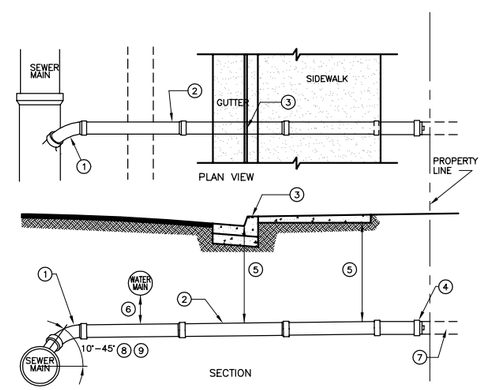

1. FACTORY-FABRICATED WYE CONNECTION TO NEW SEWER MAINS (SADDLE AND TAPPED CONNECTION TO EXISTING SEWER MAINS), WITH 1/8 BEND. BEND SHALL POINT DOWNSTREAM AND ENTER MAIN AT A VERTICAL ANGLE.
2. SEWER LATERAL PIPE AND FITTINGS SHALL BE SDR 35 PVC WITH A MINIMUM DIAMETER OF 4", AND A MINIMUM SLOPE OF 1/4" PER FOOT. LATERAL INSTALLATION SHALL BEGIN AT MAIN AND PROCEED TO END. GRADE SHALL BE UNIFORM FROM MAIN TO PROPERTY LINE. CHANGES IN GRADE OF LATERAL SHALL BE MADE USING LONG-RADIUS BENDS. PROVIDE WATER TIGHT PLUG AT END OF PIPE.
3. TOP OF CURB SHALL BE MARKED WITH AN "S" DIRECTLY OVER LATERAL. THE "S" SHALL BE STAMPED IN NEW CONCRETE OR CHISELED INTO EXISTING CONCRETE, AND SHALL NOT BE LESS THAN 3" LONG, 2" WIDE AND 3/16" DEEP. IN AREAS WITHOUT CURB PROVIDE 4" SQUARE CONC MARKER MARKED "S".
4. PROVIDE WATER TIGHT MECHANICAL PLUG.
5. DEPTH OF LATERAL SHALL NOT BE LESS THAN 36" FROM TOP OF PIPE UNLESS ENCASED IN CONCRETE OR IRON PIPE. MAXIMUM DEPTH AT GUTTERLINE SHALL BE 60" WHEN TERRAIN IS FLAT, UNLESS OTHERWISE NOTED.
6. A MINIMUM SEPARATION OF 12" SHALL BE MAINTAINED WHEN CROSSING WATER LINES. ROUTE LATERAL UNDER WATER MAINS WHEN POSSIBLE. IF VERTICAL DEFLECTIONS NECESSARY USE 22 1/2° LONG RADIUS ELBOWS.
7. SEWER LATERAL ON PRIVATE PROPERTY WITH CLEANOUTS SPACED AT 100 FOOT MAXIMUM INTERVALS AND WHERE LATERALS CHANGE DIRECTION.
8. DEEP LATERAL IN WHICH WYE IS INSTALLED VERTICALLY WILL BE ALLOWED ON CASE BY CASE BASIS. PROVIDE LONG RADIUS 22 1/2° ELBOW AT TOP.
9. FOR BELOW STREET GRADE HOMES THE WYE ANGLE MAY BE REDUCED TO LESS THAN 10° ON CASE BY CASE BASIS. PROVIDE 1/8° PER FOOT SLOPE MINIMUM.

SEWER LATERAL C-105

REGISTERED PROFESSIONAL ENGINEER JOHN ARTHUR BERGEN NO. C31069 Exp. 3-31-04 CIVIL STATE OF CALIFORNIA

REV	DATE	BY	DESCRIPTION

SCALE: NONE

WARNING: 0 1/2 1 — IF THIS BAR DOES NOT MEASURE 1" THEN DRAWING IS NOT TO SCALE

DESIGNED L. WONG
DRAWN E. WISNIEWSKI
CHECKED J. BERGEN

SUBMITTED BY
JOHN A. BERGEN — C31069 LICENSE NO. — 2/16/2004 DATE
STEVE J. HYLAND — C23892 LICENSE NO. — 2/16/2004 DATE

DIGALERT — DIAL TOLL FREE 1-800-642-2444 AT LEAST TWO DAYS BEFORE YOU DIG — UNDERGROUND SERVICE ALERT OF NORTHERN CALIFORNIA

LOS OSOS COMMUNITY SERVICES DISTRICT

MWH Walnut Creek, California

LOS OSOS WASTEWATER PROJECT

GENERAL CIVIL
STANDARD CIVIL DETAILS 1

SHEET BC-GC-060

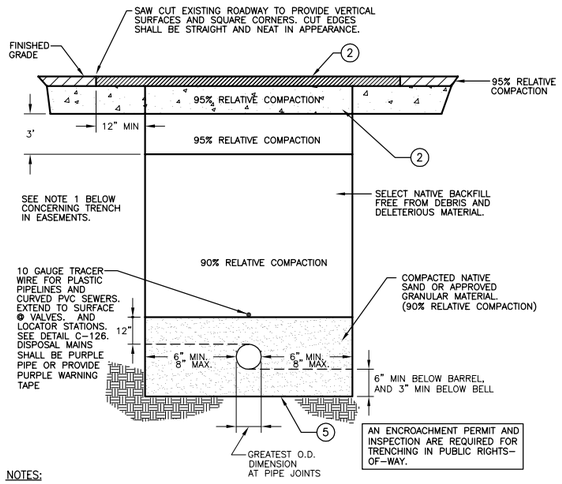

NOTES:

1. A MINIMUM OF 90% RELATIVE COMPACTION IS PERMITTED IN A NON-ROADWAY TRENCH WHEN NO STRUCTURES ARE TO BE BUILT OVER THE TRENCH. IF STRUCTURES ARE TO BE BUILT OVER THE TRENCH, USE RELATIVE COMPACTIONS SHOWN ON THE TRENCH SECTION ABOVE.
2. PAVEMENT SECTIONS SHALL BE NO LESS THAN EXISTING STRUCTURAL SECTIONS, AND AS REQUIRED BY THE COUNTY FOR TRENCHES WITHIN A COUNTY RIGHT-OF-WAY. SEE DETAIL C-120.
3. SEE DETAIL C-116B FOR WET TRENCH SECTION.
4. A DRY TRENCH IS A TRENCH IN NON-GROUNDWATER AREAS.
5. WHERE THE BOTTOM OF THE TRENCH HAS BEEN DISTURBED, THE CONTRACTOR SHALL SCARIFY AND COMPACT THE SUBGRADE TO 90% RELATIVE COMPACTION.

PIPELINE DRY TRENCH SECTION 10" AND SMALLER — C-116

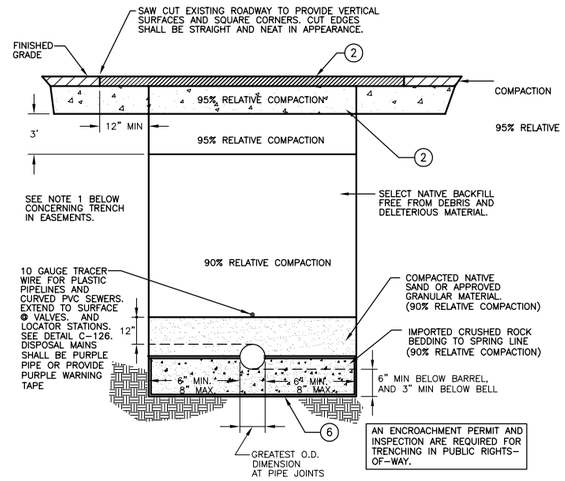

NOTES:

1. A MINIMUM OF 90% RELATIVE COMPACTION IS PERMITTED IN A NON-ROADWAY TRENCH WHEN NO STRUCTURES ARE TO BE BUILT OVER THE TRENCH. IF STRUCTURES ARE TO BE BUILT OVER THE TRENCH, USE RELATIVE COMPACTIONS SHOWN ON THE TRENCH SECTION ABOVE.
2. PAVEMENT SECTIONS SHALL BE NO LESS THAN EXISTING STRUCTURAL SECTIONS, AND AS REQUIRED BY THE COUNTY FOR TRENCHES WITHIN A COUNTY RIGHT-OF-WAY. SEE DETAIL C-120.
3. SEE DETAIL C-116B FOR WET TRENCH SECTION.
4. A DRY TRENCH IS A TRENCH IN NON-GROUNDWATER AREAS.
5. ENDS OF GEOTEXTILE SHALL TOUCH PIPE BARREL. GEOTEXTILE MAY BE LAPPED UNDER PIPE IF DESIRED.
6. WHERE THE BOTTOM OF THE TRENCH HAS BEEN DISTURBED, THE CONTRACTOR SHALL SCARIFY AND COMPACT THE SUBGRADE TO 90% RELATIVE COMPACTION.

PIPELINE DRY TRENCH SECTION 12" AND LARGER — C-116A

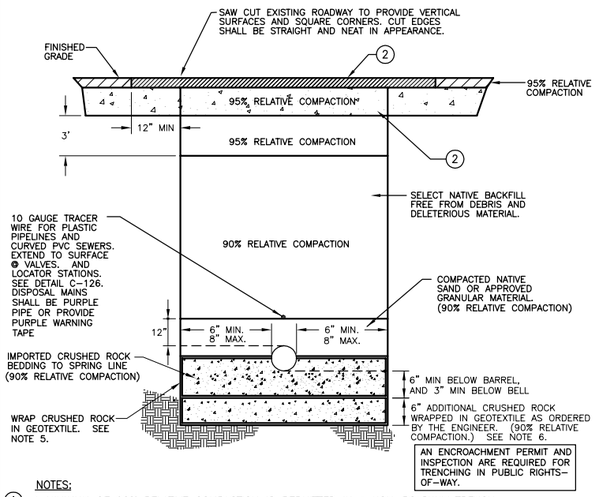

NOTES:

1. A MINIMUM OF 90% RELATIVE COMPACTION IS PERMITTED IN A NON-ROADWAY TRENCH WHEN NO STRUCTURES ARE TO BE BUILT OVER THE TRENCH. IF STRUCTURES ARE TO BE BUILT OVER THE TRENCH, USE RELATIVE COMPACTIONS SHOWN ON THE TRENCH SECTION ABOVE.
2. PAVEMENT SECTIONS SHALL BE NO LESS THAN EXISTING STRUCTURAL SECTIONS, AND AS REQUIRED BY THE COUNTY FOR TRENCHES WITHIN A COUNTY RIGHT-OF-WAY. SEE DETAIL C-120.
3. SEE DETAILS C-116 AND C-116A FOR DRY TRENCH SECTIONS.
4. A WET TRENCH IS A TRENCH IN GROUNDWATER AREAS BUT HAS BEEN DEWATERED IN ACCORDANCE WITH THE CONTRACT REQUIREMENTS.
5. ENDS OF GEOTEXTILE SHALL TOUCH PIPE BARREL. GEOTEXTILE MAY BE LAPPED UNDER PIPE IF DESIRED.
6. SHALL BE COMPENSATED IN ACCORDANCE WITH THE EXTRA WORK PROVISIONS OF THE CONTRACT OR UNIT PRICE BID ITEM, IF PROVIDED.

PIPELINE WET TRENCH SECTION ALL DIAMETERS — C-116B

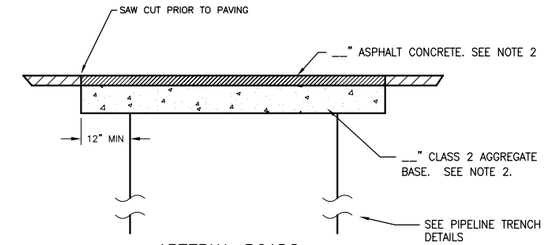

ARTERIAL ROADS

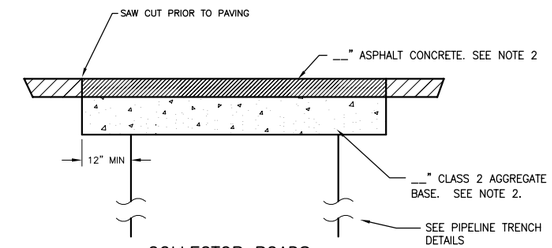

COLLECTOR ROADS

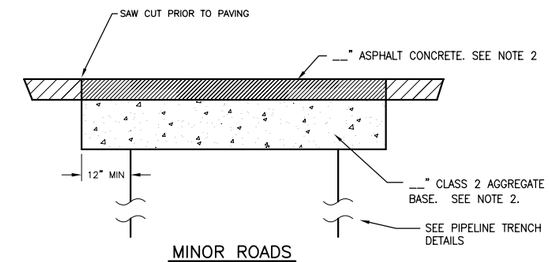

MINOR ROADS

ARTERIAL ROADS	COLLECTOR ROADS	MINOR ROADS
LOS OSOS VALLEY ROAD	SANTA YSABEL AVENUE	ALL OTHER ROADS
SOUTH BAY BOULEVARD	RAMONA AVENUE	WITHIN PROJECT AREA
PECHO VALLEY ROAD	NIPOMO AVENUE	
	NINTH STREET	
	PINE AVENUE	
	SEVENTH STREET	
	ELEVENTH STREET	
	EL MORO AVENUE	
	SECOND STREET	
	TENTH STREET	
	DORIS AVENUE	
	BINSCARTH ROAD	
	PECHO ROAD	

NOTES:

1. MINIMUM ASPHALT CONCRETE THICKNESS SHALL BE 2 1/2".
2. MATCH EXISTING ASPHALT CONCRETE AND AGGREGATE BASE THICKNESSES IF THICKER.
3. ASPHALT CONCRETE SHALL BE CALTRANS 3/4" MAXIMUM, MEDIUM GRADING.
4. GRAVEL AND BASE ROCK PAVED ROADS SHALL BE RESTORED TO MATCH EXISTING SECTION.
5. PROVIDE AND MAINTAIN TEMPORARY PAVEMENT UNTIL PERMANENT PAVEMENT IS INSTALLED.
6. SEE SPECIFICATIONS SECTION 02460-1.1C REGARDING WHEN A.C. OVERLAY REQUIRED.

PAVEMENT RESTORATION STRUCTURAL SECTION — C-120

REGISTERED PROFESSIONAL ENGINEER JOHN ARTHUR BERGEN NO. C31069 Exp. 3-31-04 CIVIL STATE OF CALIFORNIA

CRITERIA FOR THE SEPARATION OF WATER MAINS AND SANITARY SEWERS

CASE 1
NEW SEWER MAIN BEING INSTALLED
(SEE FIGURE 1)

ZONE	SPECIAL CONSTRUCTION REQUIRED FOR SEWER:
A	SEWER LINES PARALLEL TO WATER MAINS SHALL NOT BE PERMITTED IN THIS ZONE WITHOUT APPROVAL FROM THE RESPONSIBLE HEALTH AGENCY AND WATER SUPPLIER.
B	A SEWER LINE PLACED PARALLEL TO A WATER LINE SHALL BE CONSTRUCTED OF: 1. PLASTIC SEWER PIPE WITH RUBBER RING JOINTS (PER ASTM D3034) OR EQUIVALENT. 2. CAST OR DUCTILE IRON PIPE WITH COMPRESSION JOINTS.
C	A SEWER LINE CROSSING A WATER MAIN SHALL BE CONSTRUCTED OF: 1. DUCTILE IRON PIPE WITH HOT DIP BITUMINOUS COATING AND MECHANICAL JOINTS. 2. A CONTINUOUS SECTION OF CLASS 200 (DR 14 PER AWWA C900) PLASTIC PIPE, OR EQUIVALENT. CENTERED OVER THE PIPE BEING CROSSED. 3. ANY SEWER PIPE WITHIN A CONTINUOUS SLEEVE.
D	A SEWER LINE CROSSING A WATER MAIN SHALL BE CONSTRUCTED OF: 1. A CONTINUOUS SECTION OF DUCTILE IRON PIPE WITH HOT DIP BITUMINOUS COATING. 2. A CONTINUOUS SECTION OF CLASS 200 (DR 14 PER AWWA C900) PLASTIC PIPE OR EQUIVALENT. CENTERED OVER THE PIPE BEING CROSSED. 3. ANY SEWER PIPE WITHIN A CONTINUOUS SLEEVE. 4. ANY SEWER PIPE SEPARATED BY A TEN-FOOT BY TEN-FOOT, FOUR-INCH THICK REINFORCED CONCRETE SLAB.

CASE 2
NEW WATER MAIN BEING INSTALLED
(SEE FIGURE 2)

ZONE	SPECIAL CONSTRUCTION REQUIRED FOR WATER:
A	NO WATER MAINS PARALLEL TO SERVICE SHALL BE CONSTRUCTED WITHOUT APPROVAL FROM THE HEALTH AGENCY.
B	IF THE SEWER PARALLELING THE WATER MAIN DOES NOT MEET THE CASE 1, ZONE B REQUIREMENTS, THE WATER MAIN SHALL BE CONSTRUCTED OF: 1. DUCTILE IRON PIPE WITH HOT DIP BITUMINOUS COATING. 2. DIPPED AND WRAPPED ONE-FOURTH-INCH-THICK WELDED STEEL PIPE. 3. CLASS 200 PRESSURE RATED PLASTIC WATER PIPE (DR 14 PER AWWA C900) OR EQUIVALENT. 4. REINFORCED CONCRETE PRESSURE PIPE, STEEL CYLINDER TYPE, PER AWWA (C300-74, C301-79 OR C303-70). 5. CLASS 200, TYPE II, ASBESTOS-CEMENT PRESSURE PIPE.
C	IF THE SEWER CROSSING THE WATER MAIN DOES NOT MEET THE CASE 1, ZONE C REQUIREMENTS, THE WATER MAIN SHALL HAVE NO JOINTS IN ZONE C AND BE CONSTUCTED OF: 1, 2, 3 OR 4 AS IN ZONE B, ABOVE.
D	IF THE SEWER CROSSING THE WATER MAIN DOES NOT MEET THE CASE 1, ZONE D REQUIREMENTS, THE WATER MAIN SHALL HAVE NO JOINTS WITHIN FOUR FEET FROM EITHER SIDE OF THE SEWER AND SHALL BE CONSTRUCTED OF: 1, 2, 3 OR 4 AS IN ZONE B, ABOVE.

WATER AND SEWER SEPARATION NOTES — C-117

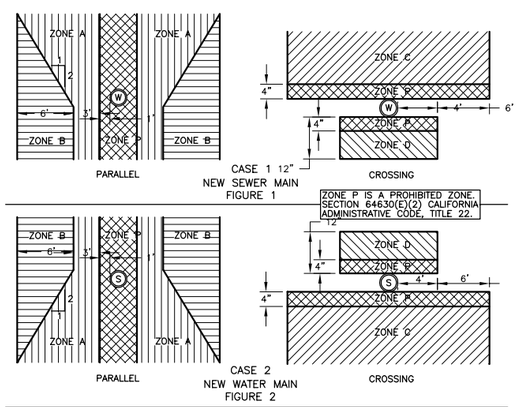

NOTES AND DEFINITIONS

- COMPRESSION JOINT – A PUSH-ON JOINT THAT SEALS BY MEANS OF THE COMPRESSION OF A RUBBER RING OR GASKET BETWEEN THE PIPE AND A BELL OF COUPLING.
- DIMENSIONS ARE FROM THE OUTSIDE OF WATER MAIN TO OUTSIDE OF SEWER LINE OR MANHOLE.
- FUSED JOINT – THE JOINING OF SECTIONS OF PIPE USING THERMAL OR CHEMICAL BONDING PROCESSES.
- GROUND WATER – SUBSURFACE WATER FOUND IN THE SATURATION ZONE.
- HEALTH AGENCY – THE STATE DEPOARTMENT OF HEALTH SERVICES. FOR THOSE WATER SYSTEMS SUPPLYING LESS THAN 200 SERVICE CONNECTIONS, THE LOCAL HEALTH OFFICER SHALL ACT FOR THE DEPARTMENT OF HEALTH SERVICES.
- HOUSE LATERAL – A SEWER PIPE CONNECTING THE BUILDING DRAIN AND THE MAIN SEWER LINE.
- LOW HEAD WATER MAIN – ANY WATER MAIN WHICH HAS A PRESSURE OF 5 PSI OR LESS AT ANY TIME AT ANY POINT IN THE MAIN.
- MECHANICAL JOINT – BOLTED JOINT
- RATED WORKING WATER PRESSURE OR PRESSURE CLASS – A PIPE CLASSIFICATION SYSTEM BASED UPON INTERNAL WORKING PRESSURE OF THE FLUID IN THE PIPE, TYPE OF PIPE MATERIAL, AND THE THICKNESS OF THE PIPE WALL.
- SLEEVE – A PROTECTIVE TUBE OF STEEL WITH A WALL THICKNESS OF NOT LESS THAN ONE-FOURTH INCH INTO WHICH A PIPE IS INSERTED.
- WATER SUPPLIER – ANY PERSON WHO OWNS OR OPERATES A PUBLIC WATER SYSTEM

WATER AND SEWER SEPARATION DIAGRAM — C-118

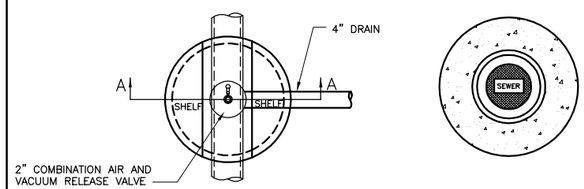

BOTTOM PLAN — TOP PLAN

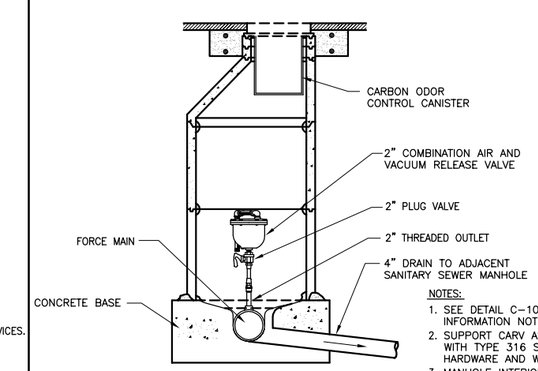

SECTION A–A

NOTES:

1. SEE DETAIL C-100 FOR MANHOLE INFORMATION NOT SHOWN.
2. SUPPORT CARV AS NECESSARY WITH TYPE 316 SS CHANNEL, HARDWARE AND WEDGE ANCHORS.
3. MANHOLE INTERIOR SHALL BE PVC T-LOCK LINED. COAT MANHOLE SHELF AREA WITH EPOXY: POLYBRID, EUCOPOXY, OR EQUAL.
4. PROVIDE SHORT STYLE CARV TO FIT SPACE AVAILABLE.

COMBINATION AIR/ VACUUM RELEASE VALVE MANHOLE — C-119

REV	DATE	BY	DESCRIPTION

SCALE: NONE

WARNING: 0 1/2 1 — IF THIS BAR DOES NOT MEASURE 1" THEN DRAWING IS NOT TO SCALE

DESIGNED L. WONG
DRAWN E. WISNIEWSKI
CHECKED J. BERGEN

SUBMITTED BY
JOHN A. BERGEN — C31069 LICENSE NO. — 2/16/2004 DATE
STEVE J. HYLAND — C23892 LICENSE NO. — 2/16/2004 DATE

DIGALERT — DIAL TOLL FREE 1-800-642-2444 AT LEAST TWO DAYS BEFORE YOU DIG — UNDERGROUND SERVICE ALERT OF NORTHERN CALIFORNIA

LOS OSOS COMMUNITY SERVICES DISTRICT

MWH Walnut Creek, California

LOS OSOS WASTEWATER PROJECT
GENERAL CIVIL
STANDARD CIVIL DETAILS 2

SHEET BC-GC-061

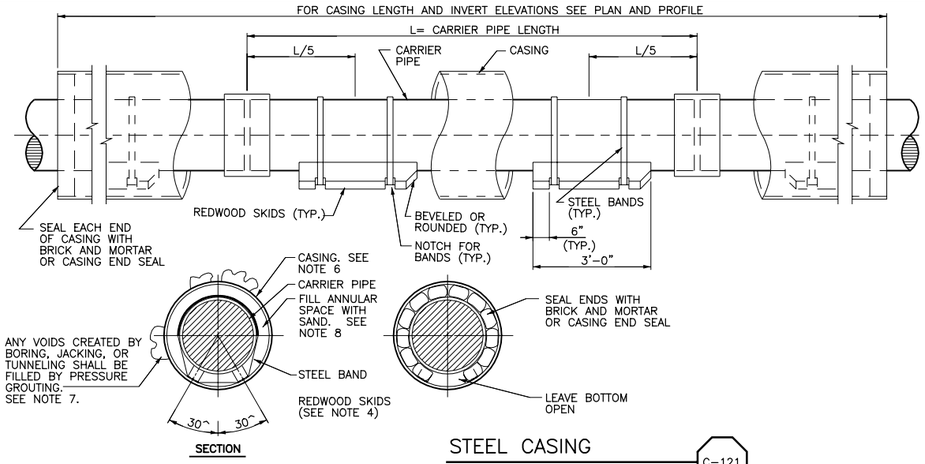

NOTES:

1. CASING SHALL BE SMOOTH PIPE.
2. CARRIER PIPE SHALL BE INSTALLED PER MANUFACTURER'S RECOMMENDATIONS.
3. CARRIER PIPE SHALL BE TESTED BEFORE SEALING ENDS OF PIPE.
4. SKIDS SHALL BE GREASED TO FACILIATE CARRIER PIPE INSTALLATION.
5. SEE SPECIFICATION SECTION 02340 BORING AND JACKING FOR ADDITIONAL REQUIREMENTS.
6. CASING I.D. SHALL BE PIPE O.D. PLUS 12" MIN.
7. PROVIDE THREADED GROUT PORTS IN CASING TO ENABLE PRESSURE GROUTING. SEAL WITH THREADED CAST IRON OR STEEL PLUGS UPON COMPLETION.
8. BLOCK CARRIER PIPE TO PREVENT PIPE FLOTATION OR DISTURBANCE DURING SAND BACKFILLING.

CASING SIZE	CASING WALL THICKNESS (a)	SKID SIZE
20", 22"	1/2" MIN	4" x 4"
24"	1/2" MIN	4" x 4"
26"	1/2" MIN	4" x 4"
30"	1/2" MIN	4" x 4"
34"	1/2" MIN	4" x 4"
40"	5/8" MIN	6" x 6"
44"	5/8" MIN	6" x 6"
54"	5/8" MIN	6" x 6"
64"	5/8" MIN	8" x 8"

STEEL CASING — C-121

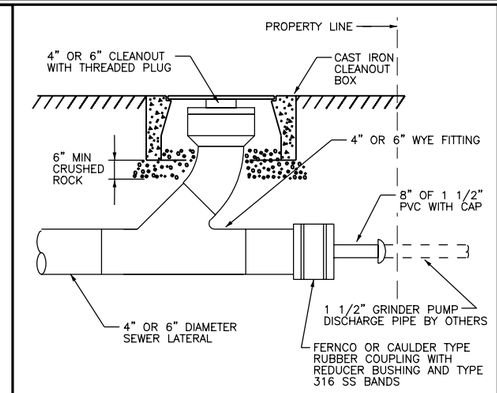

GRINDER PUMP DISCHARGE TO SEWER LATERAL — C-122

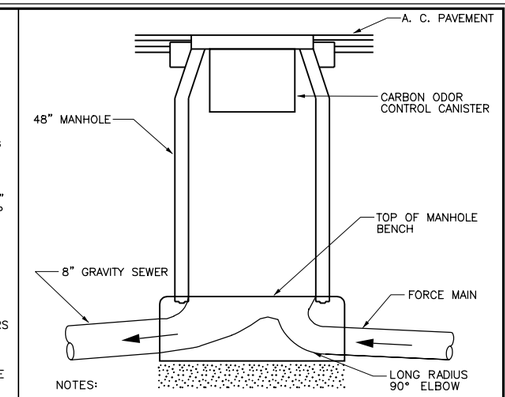

NOTES:

1. DETAILS NOT SHOWN SHALL BE IN ACCORDANCE WITH C-100
2. SEE NOTE 4, C-124

FORCE MAIN TO GRAVITY SEWER TRANSITION MANHOLE — C-123

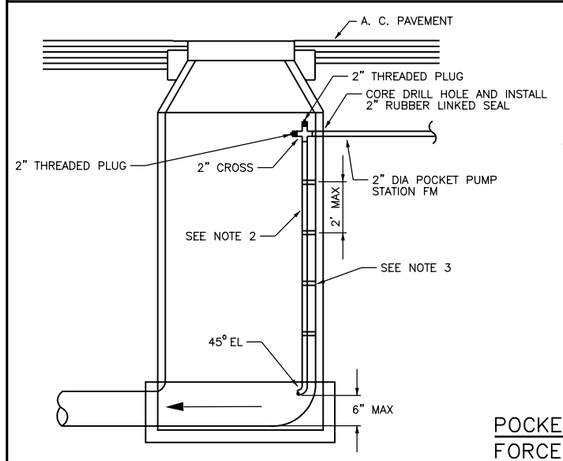

NOTES:

1. DETAILS NOT SHOWN SHALL BE IN ACCORDANCE WITH C-100.
2. ALL 2" PIPE WITHIN MANHOLE SHALL BE 2" SOLVENT WELDED SCHEDULE 40 PVC.
3. SUPPORT 2" PIPE AS CLOSE AS POSSIBLE ON MANHOLE WALL WITH TYPE 316 SS PIPE CLAMPS PER C-125.
4. MANHOLE INTERIOR SHALL BE PVC T-LOCK LINED. COAT MANHOLE BENCH AREA WITH EPOXY; POLYBRID, EUCOPOXY, OR EQUAL.
5. CHANNELIZE AND SLOPE BOTTOM OF MANHOLE TO DRAIN TO GRAVITY SEWER.

POCKET PUMP STATION FORCE MAIN TO GRAVITY SEWER TRANSITION MANHOLE — C-124

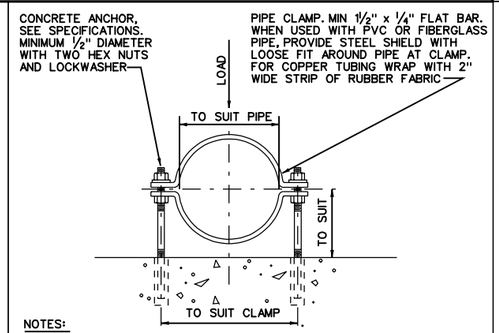

NOTES:

1. PIPE CLAMP, NUTS, LOCKWASHERS, ANCHORS AND SHIELDS TO BE TYPE 316 STAINLESS STEEL.
2. THIS PIPE CLAMP IS LIMITED TO PIPES UP TO 4" DIAMETER INCLUSIVE
3. FOR ADDITIONAL REQUIREMENTS SEE SPECIFICATIONS SECTION 'PIPE SUPPORTS'

PIPE CLAMP (FOR PIPE 4" DIAMETER AND SMALLER) — C-125

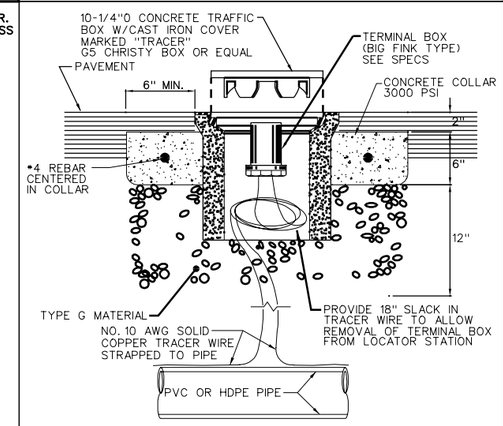

FLUSH MOUNTED LOCATOR STATION CONCRETE BOX — C-126

REGISTERED PROFESSIONAL ENGINEER JOHN ARTHUR BERGEN NO. C31069 Exp. 3-31-04 CIVIL STATE OF CALIFORNIA

REV	DATE	BY	DESCRIPTION

SCALE: H: 1"=40' V: 1"=4'

WARNING: 0 1/2 1 — IF THIS BAR DOES NOT MEASURE 1" THEN DRAWING IS NOT TO SCALE

DESIGNED L. WONG
DRAWN E. WISNIEWSKI
CHECKED J. BERGEN

SUBMITTED BY
JOHN A. BERGEN — C31069 LICENSE NO. — 2/16/2004 DATE
STEVE J. HYLAND — C23892 LICENSE NO. — 2/16/2004 DATE

DIGALERT — DIAL TOLL FREE 1-800-642-2444 AT LEAST TWO DAYS BEFORE YOU DIG — UNDERGROUND SERVICE ALERT OF NORTHERN CALIFORNIA

LOS OSOS COMMUNITY SERVICES DISTRICT

MWH Walnut Creek, California

SUBCONSULTANT'S LOGO

LOS OSOS WASTEWATER PROJECT
GENERAL CIVIL
STANDARD CIVIL DETAILS 3

SHEET BC-GC-062

Job No: 1481166 File: N:\Projects\los_osos\Collect_Sys\BC\civ\BC-GC-062.dgn Plot Date: 09-FEB-2004 15:19

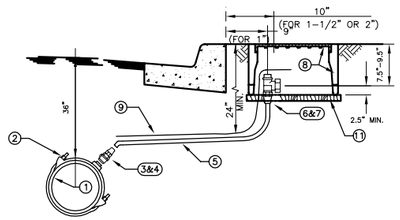

		3/4" AND 1" METERS
1	WATER MAIN	PER PLAN
2	SERVICE SADDLE	BRONZE, DOUBLE STRAP, JAMES JONES J-979 FOR AC PIPE JAMES JONES J-969 FOR PVC PIPE OR APPROVED EQUAL
3	CORPORATION STOP	GROUNDKEY: JAMES JONES J-1944 1" SIZE ONLY, MIP X MIP #41
4	ADAPTER	1" FIP X INSTATITE, MUELLER H15456
5	SERVICE LATERAL	1" POLYETHELYNE ONLY IPS SIZE, 200 PSI MINIMUM, WESTFLEX GOLD LABEL 3408, DRISCOPIPE, OR APPROVED EQUAL.
6	ANGLE METER STOP (BALL TYPE)	JAMES JONES J-1527 (1"X1" OR 1"X 3/4")
7	ADAPTER	1" MIP X INSTATIGHT H15456
8	METER BOX AND LID	3/4" AND 1" METERS USE, BROOKS 37 SERIES (TRAFFIC LID IN TRAFFIC AREA ONLY)
9	10 GAGE TRACER WIRE PER SPECIFICATIONS.	
10	IN UNPAVED AREAS, RAISE METER BOX 1" ABOVE THE ADJACENT FINISHED SURFACE.	
11	1" X 12" CONCRETE BASE	
12	CUSTOMER SIDE CURB STOP – JONES J 1913W	

SINGLE WATER SERVICE C-110

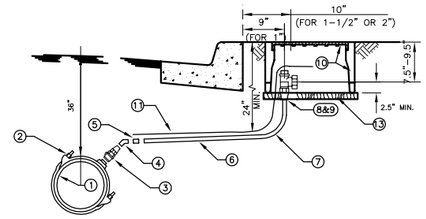

		1-1/2" AND 2" METERS
1	WATER MAIN	PER PLAN
2	SERVICE SADDLE	BRONZE, DOUBLE STRAP, JAMES JONES J-979 FOR AC PIPE JAMES JONES J-969 FOR PVC PIPE OR APPROVED EQUAL
3	CORPORATION STOP	BALL VALVE: JAMES JONES J-1943 2" SIZE ONLY, MIP X MIP
4	BRASS 45° EL	2" 45° ELBOW ONLY
5	ADAPTER	FORD 2" PAC COUPLING X MIP
6	SERVICE LATERAL	2" SCH 80 PVC ONLY
7	90° ELBOW	2" SCH 80 90° ELBOW
8	ANGLE METER STOP (BALL TYPE)	FORD FB11027
9	ADAPTER	2" SCH 80 MIP X SOC
10	METER BOX AND LID	1 1/2" METERS USE, BROOKS 38 SERIES 2" METERS USE, BROOKS 65 SERIES (TRAFFIC LID IF IN DRIVEWAY)
11	10 GAGE TRACER WIRE PER SPECIFICATIONS.	
12	IN UNPAVED AREAS, RAISE METER BOX 1" ABOVE THE ADJACENT FINISHED SURFACE.	
13	1" X 12" CONCRETE BASE	
14	CUSTOMER SIDE CURB STOP – JF108	

SINGLE WATER SERVICE C-111

REGISTERED PROFESSIONAL ENGINEER
JOHN ARTHUR BERGEN
NO. C31069
Exp. 3-31-04
CIVIL
STATE OF CALIFORNIA

REV	DATE	BY	DESCRIPTION

SCALE: NONE

WARNING: 0 1/2 1 — IF THIS BAR DOES NOT MEASURE 1" THEN DRAWING IS NOT TO SCALE

DESIGNED L. WONG
DRAWN E. WISNIEWSKI
CHECKED J. BERGEN

SUBMITTED BY
JOHN A. BERGEN — C31069 LICENSE NO. — 2/16/2004 DATE
STEVE J. HYLAND — C23892 LICENSE NO. — 2/16/2004 DATE

DIGALERT — DIAL TOLL FREE 1-800-642-2444 AT LEAST TWO DAYS BEFORE YOU DIG — UNDERGROUND SERVICE ALERT OF NORTHERN CALIFORNIA

LOS OSOS COMMUNITY SERVICES DISTRICT

MWH Walnut Creek, California

LOS OSOS WASTEWATER PROJECT

GENERAL CIVIL
STANDARD CIVIL DETAILS 4

SHEET BC-GC-063

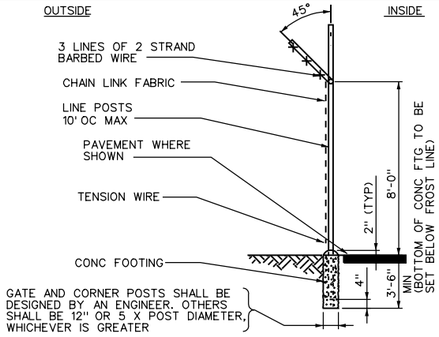

NOTES:

1. SEE SPECIFICATIONS FOR FENCE MATERIAL, COATINGS, AND INSTALLATION REQUIREMENTS
2. EXTENSION ARM MAY BE TURNED IN AT OPTION OF OWNER.

CHAIN LINK FENCE

REV 040302 C-126

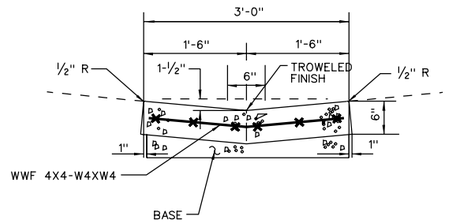

NOTES:

1. EXPANSION JOINTS OF ½" PREMOLDED JOINT FILLER SHALL BE PLACED 50 FOOT SPACING AND WHERE GUTTER BUTTS OTHER CONCRETE STRUCTURES
2. BASE AND SUBGRADE PREPARATION SHALL MATCH ADJACENT PAVING

CONCRETE CROSS GUTTER

C-127

NOTES:

1. SEE SPECIFICATIONS FOR FENCE MATERIAL, COATINGS, AND INSTALLATION REQUIREMENTS.
2. SEE SPECIFICATIONS FOR CLEARANCES IN SNOW REGIONS.
3. 12" DIAMETER X 18" DEEP CONCRETE STOP W/ 6-#4 BARS, 20 GA STEEL PLUNGER SLEEVE. DIA = ROD OD + ½".

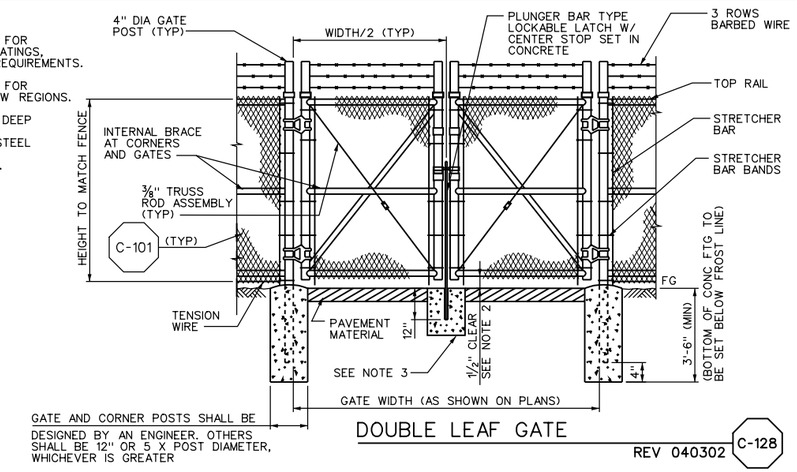

DOUBLE LEAF GATE

REV 040302 C-128

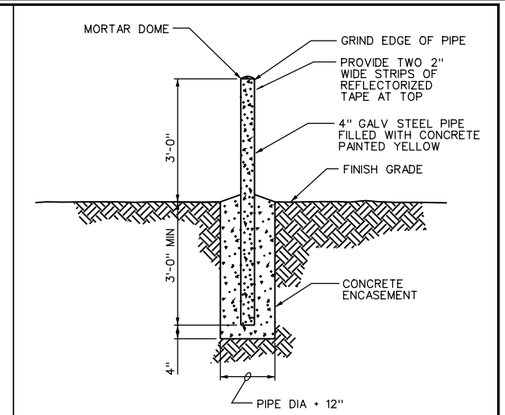

GUARD POST

REV 040302 C-129

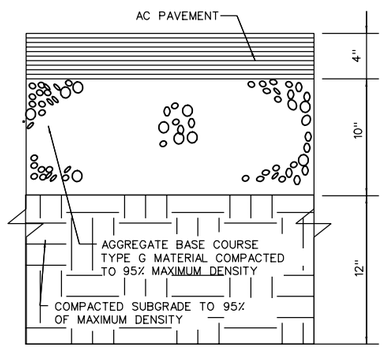

ASPHALTIC CONCRETE (AC) PAVEMENT

NOT TO SCALE

(SEE C-120 FOR PAVEMENT RESTORATION DETAIL)

C-130

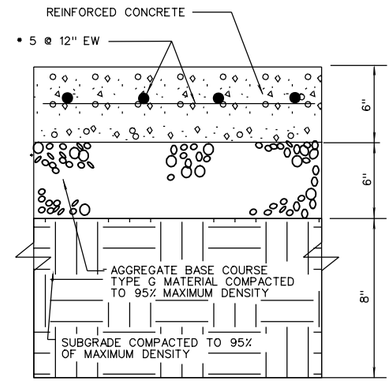

CONCRETE PAVEMENT

NOT TO SCALE

C-131

NOTE: ON CURVES USE 4 LAYERED REDWOOD BENDER BOARDS

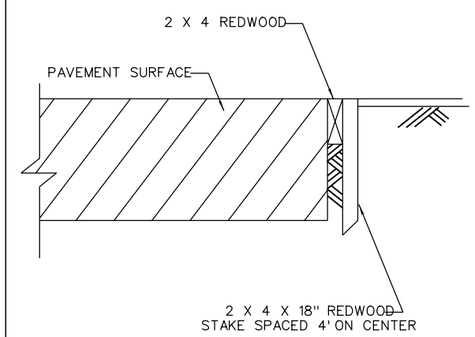

REDWOOD HEADER

NOT TO SCALE

C-134

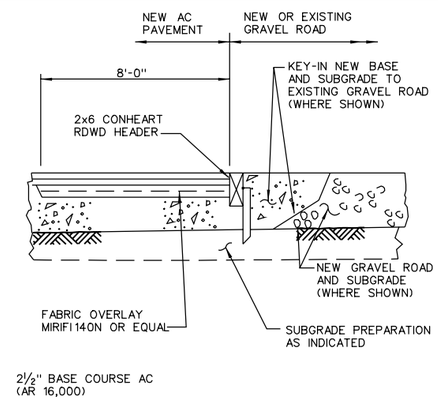

AC PAVEMENT-GRAVEL TRANSITION

NOT TO SCALE

C-141

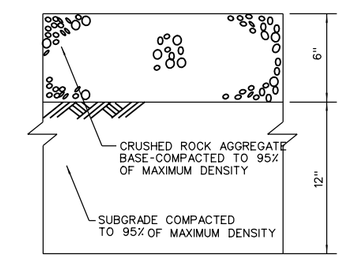

GRAVEL PAVING

NOT TO SCALE

C-144

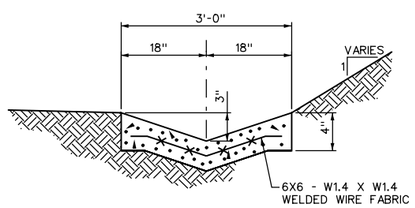

NOTES:

1. EXPANSION JOINTS OF ONE-HALF INCH BITUMINOUS MATERIAL SHALL BE PLACED AT 50-FEET SPACING AND WHERE SWALE BUTTS OTHER CONCRETE STRUCTURES.
2. PREPARE BASE AND SUBBASE PER PAVING DETAIL C-130

CONCRETE LINED SWALE

REV 030602 C-206

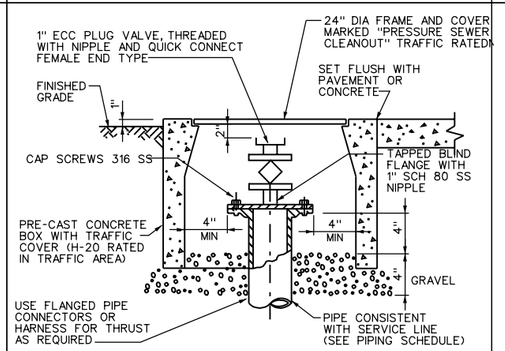

PRESSURIZED SYSTEM CLEANOUT TO GRADE (PCOTG)

REV 010500 C-305

REGISTERED PROFESSIONAL ENGINEER JOHN ARTHUR BERGEN NO. C31069 Exp. 3-31-04 CIVIL STATE OF CALIFORNIA

REV	DATE	BY	DESCRIPTION

SCALE: NO SCALE

WARNING: 0 1/2 1 — IF THIS BAR DOES NOT MEASURE 1" THEN DRAWING IS NOT TO SCALE

DESIGNED L. WONG
DRAWN E. WISNIEWSKI
CHECKED J. BERGEN

SUBMITTED BY
JOHN A. BERGEN — C31069 LICENSE NO. — 2/16/2004 DATE
STEVE J. HYLAND — C23892 LICENSE NO. — 2/16/2004 DATE

DIGALERT — DIAL TOLL FREE 1-800-642-2444 AT LEAST TWO DAYS BEFORE YOU DIG — UNDERGROUND SERVICE ALERT OF NORTHERN CALIFORNIA

LOS OSOS COMMUNITY SERVICES DISTRICT

MWH Walnut Creek, California

SUBCONSULTANT'S LOGO

LOS OSOS WASTEWATER PROJECT
GENERAL CIVIL
GENERAL CIVIL DETAILS 5

SHEET BC-GC-064

Plot Date: 09-FEB-2004 15:19
File: N:\Projects\los_osos\Collect_Sys\BC\civ\BC-GC-064.dgn
Job No: 1481166

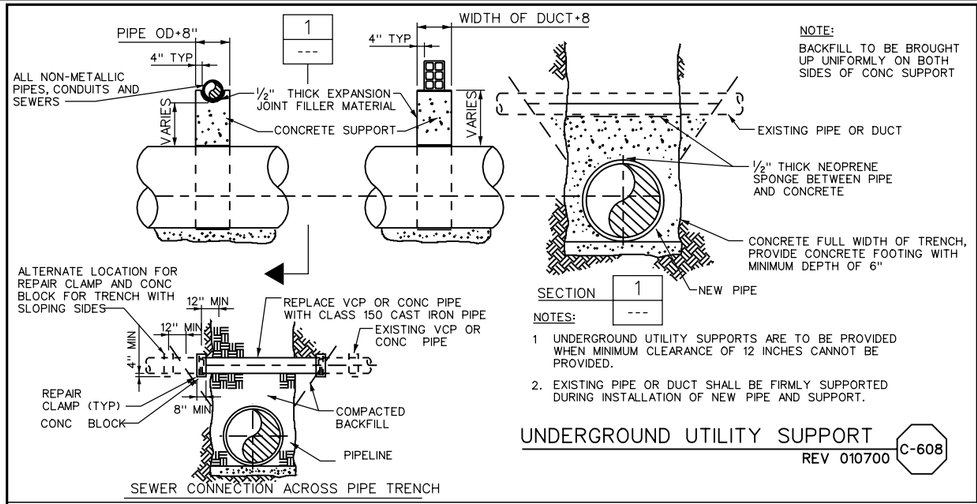

NOTE:
BACKFILL TO BE BROUGHT UP UNIFORMLY ON BOTH SIDES OF CONC SUPPORT

NOTES:
1 UNDERGROUND UTILITY SUPPORTS ARE TO BE PROVIDED WHEN MINIMUM CLEARANCE OF 12 INCHES CANNOT BE PROVIDED.
2. EXISTING PIPE OR DUCT SHALL BE FIRMLY SUPPORTED DURING INSTALLATION OF NEW PIPE AND SUPPORT.

UNDERGROUND UTILITY SUPPORT

REV 010700 C-608

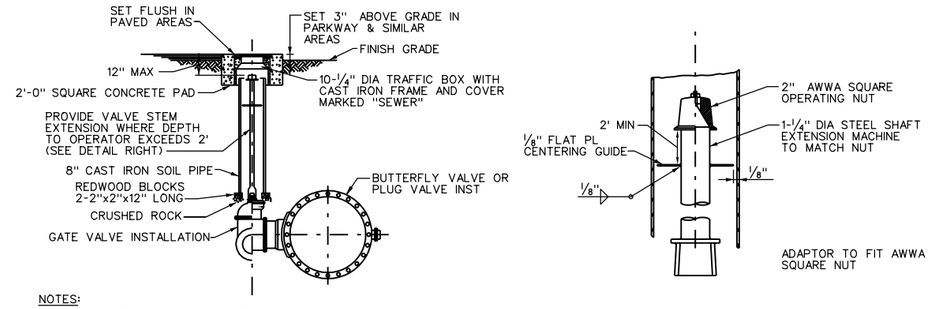

NOTES:
PROVIDE PROTECTIVE COATING TO EXTERIOR SURFACE OF VALVE BODY IN ACCORDANCE WITH SPECS.
FOR LUBRICATED PLUG VALVE, EXTEND LUBRICATION LINE TO GRADE PER MANUFACTURES INSTRUCTIONS.

BURIED VALVE INSTALLATION

REV 011200 C-640

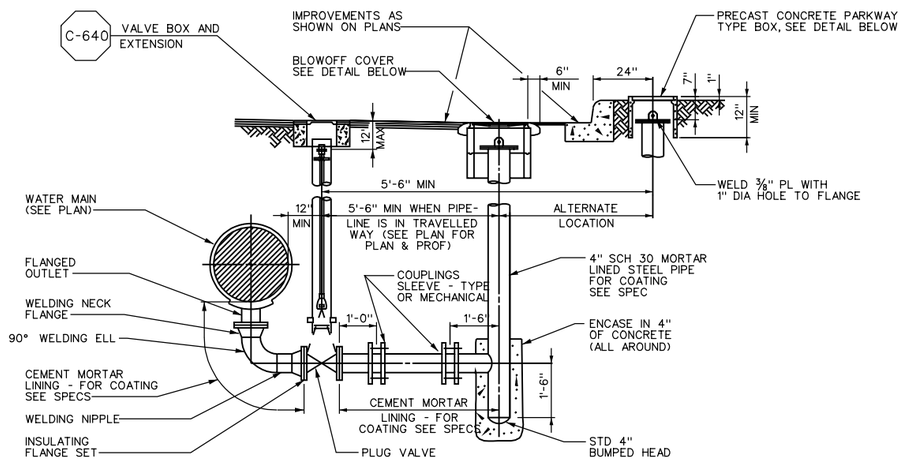

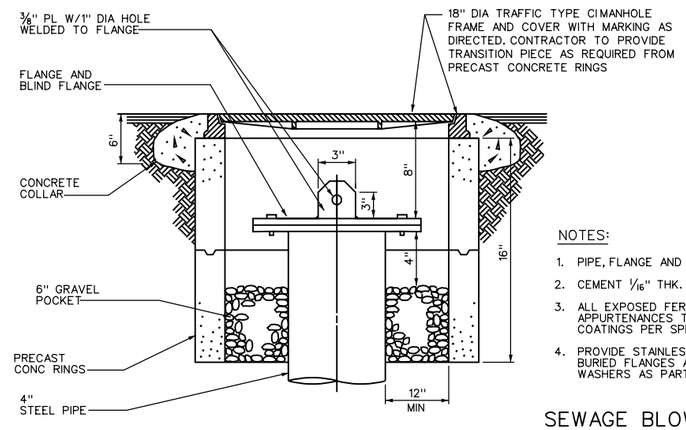

NOTES:

1. PIPE, FLANGE AND BLIND FLANGE SAME CLASS AS PIPELINE.
2. CEMENT 1/16" THK. FULL COVER GASKET TO FLANGE.
3. ALL EXPOSED FERROUS SURFACES OF BURIED PIPE AND APPURTENANCES TO BE PROVIDED WITH PROTECTIVE COATINGS PER SPECIFICATIONS.
4. PROVIDE STAINLESS STEEL NUTS, BOLTS AND WASHERS TO BURIED FLANGES AND COUPLINGS EXCEPT FOR NON-METALLIC WASHERS AS PART OF INSULATING FLANGE SET.

SEWAGE BLOWOFF

REV 030602 C-620

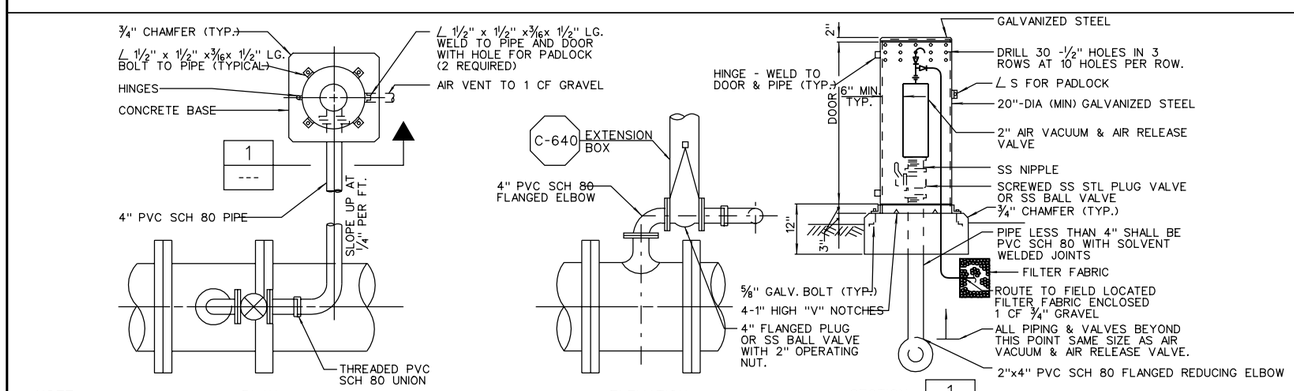

NOTE:

1. THIS ASSEMBLY TO BE USED IN AREAS WHERE VAULT NOT REQUIRED OR WHERE MAIN PIPELINE IS TOO SHALLOW TO PERMIT USE OF VAULT.
2. ALL FERROUS SURFACES OF PIPE AND APURTENANCES TO BE PROVIDED WITH PROTECTIVE COATING PER SPECS.
3. PROVIDE STAINLESS STL. NUTS, BOLTS AND WASHERS TO BURIED FLANGES AND COUPLINGS, EXCEPT FOR NONMETALLIC WASHERS TO BE PROVIDED AS PART OF INSULATING FLANGE SET.

SEWAGE AIR VACUUM/ AIR RELEASE VALVE

REV 030602 C-906

(ALSO SEE C-119 COMBINATION AIR/ VACUUM RELEASE VALVE MANHOLE)

REGISTERED PROFESSIONAL ENGINEER JOHN ARTHUR BERGEN NO. C31069 Exp. 3-31-04 CIVIL STATE OF CALIFORNIA

REV	DATE	BY	DESCRIPTION

SCALE: NO SCALE

WARNING: 0 1/2 1 — IF THIS BAR DOES NOT MEASURE 1" THEN DRAWING IS NOT TO SCALE

DESIGNED L. WONG
DRAWN E. WISNIEWSKI
CHECKED J. BERGEN

SUBMITTED BY
JOHN A. BERGEN — C31069 LICENSE NO. — 2/16/2004 DATE
STEVEN J. HYLAND — C23892 LICENSE NO. — 2/16/2004 DATE

DIGALERT — DIAL TOLL FREE 1-800-642-2444 AT LEAST TWO DAYS BEFORE YOU DIG — UNDERGROUND SERVICE ALERT OF NORTHERN CALIFORNIA

LOS OSOS COMMUNITY SERVICES DISTRICT

MWH Walnut Creek, California

SUBCONSULTANT'S LOGO

LOS OSOS WASTEWATER PROJECT
GENERAL CIVIL
GENERAL CIVIL DETAILS 6

SHEET BC-GC-065

Job No: 1481166 File: N:\Projects\los_osos\Collect_Sys\BC\civ\BC-GC-065.dgn Plot Date: 09-FEB-2004 15:19

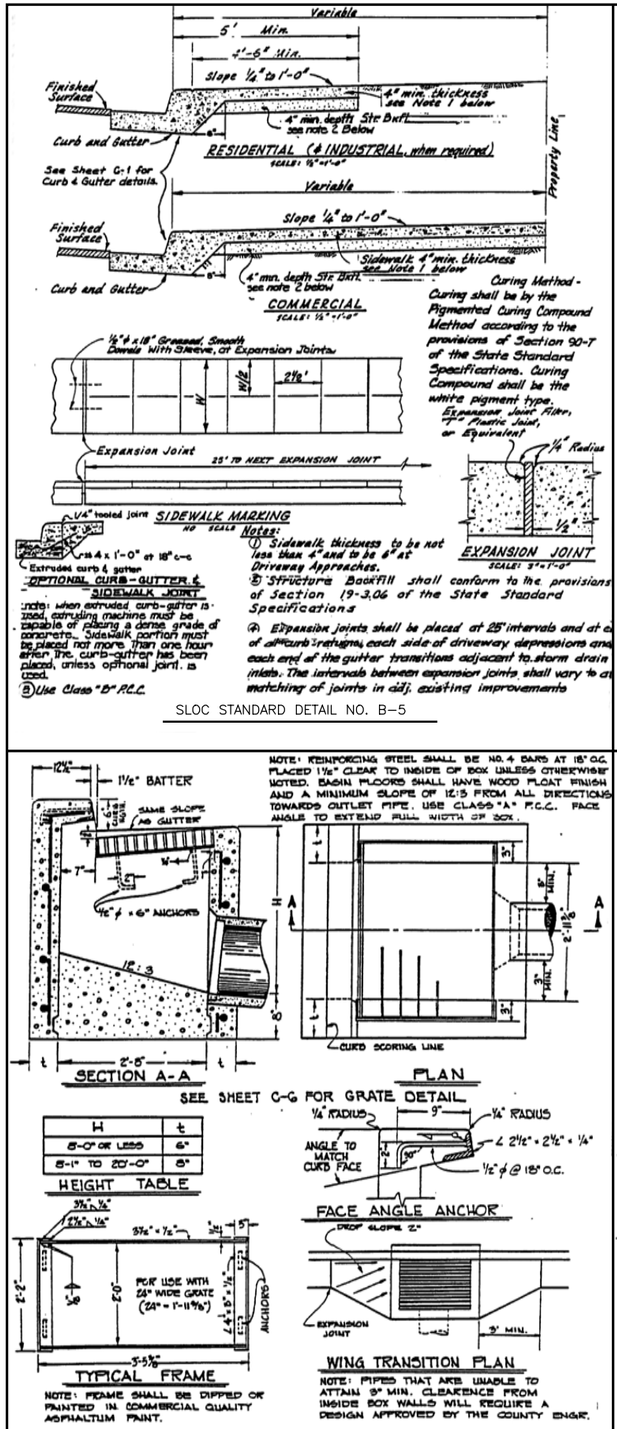

SLOC STANDARD DETAIL NO. B-5

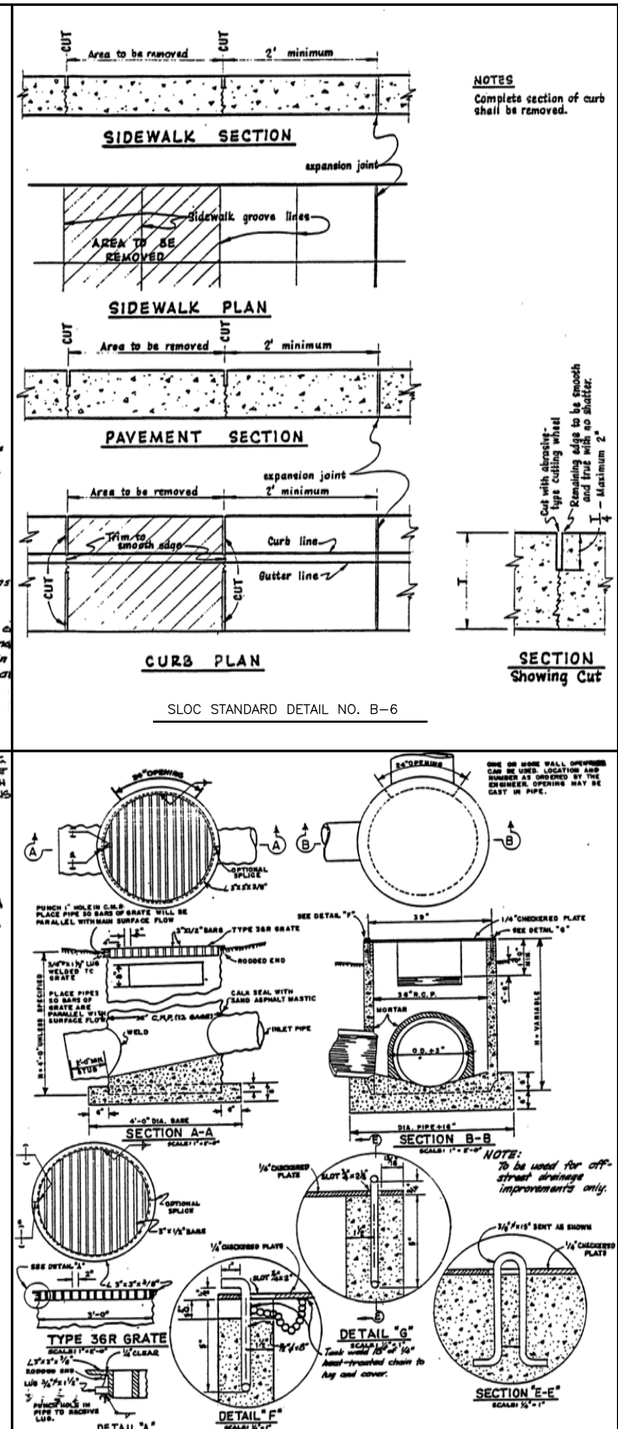

SLOC STANDARD DETAIL NO. B-6

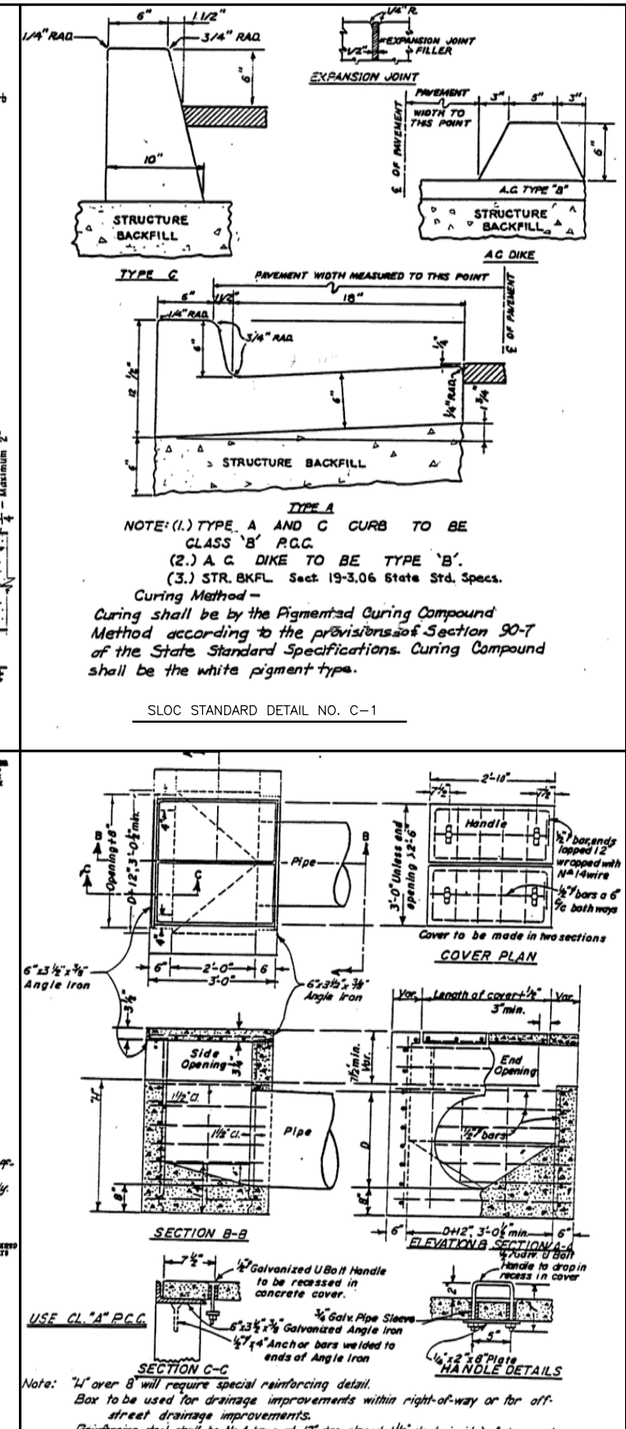

SLOC STANDARD DETAIL NO. C-1

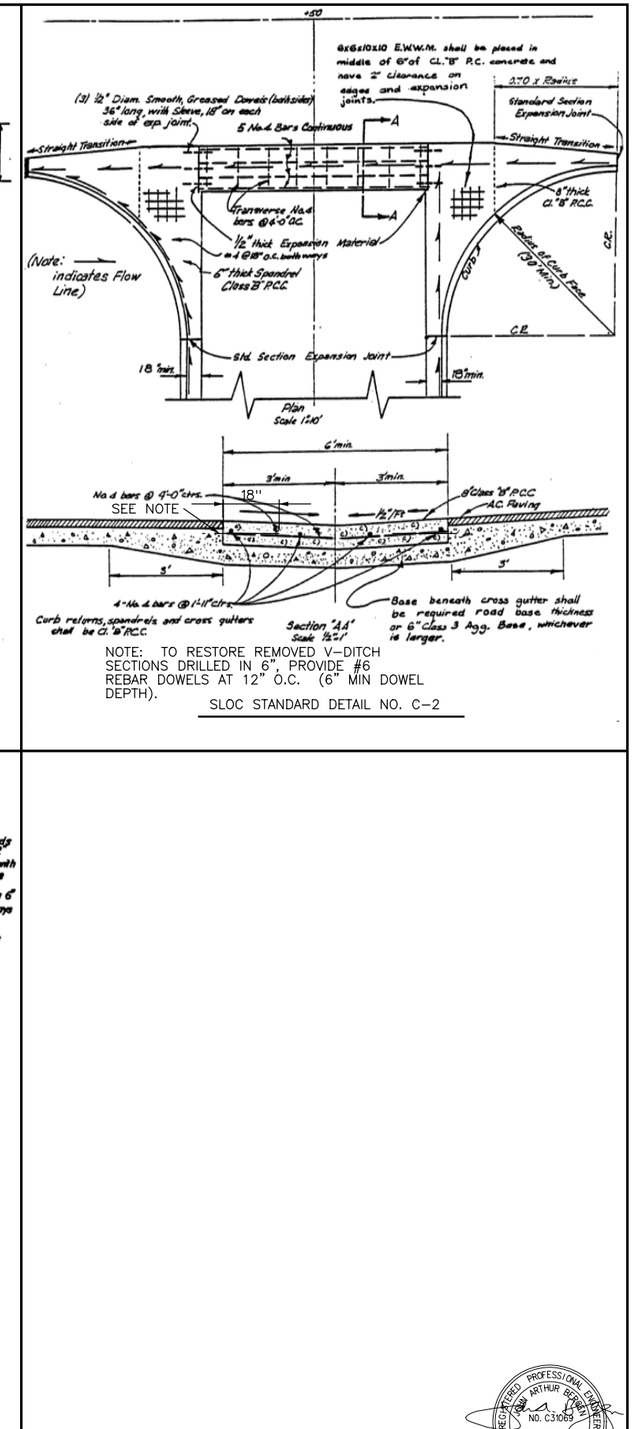

NOTE: TO RESTORE REMOVED V-DITCH SECTIONS DRILLED IN 6", PROVIDE #6 REBAR DOWELS AT 12" O.C. (6" MIN DOWEL DEPTH).

SLOC STANDARD DETAIL NO. C-2

SLOC STANDARD DETAIL NO. C-3

SLOC STANDARD DETAIL NO. C-4

SLOC STANDARD DETAIL NO. C-5

REGISTERED PROFESSIONAL ENGINEER ARTHUR BERGEN NO. C31069 Exp. 3-31-04 CIVIL STATE OF CALIFORNIA

REV	DATE	BY	DESCRIPTION

SCALE: NO SCALE

WARNING: 0 1/2 1 — IF THIS BAR DOES NOT MEASURE 1" THEN DRAWING IS NOT TO SCALE

DESIGNED L. WONG
DRAWN E. WISNIEWSKI
CHECKED J. BERGEN

SUBMITTED BY
JOHN A. BERGEN — C31069 LICENSE NO. — 2/16/2004 DATE
STEVE J. HYLAND — C23892 LICENSE NO. — 2/16/2004 DATE

DIGALERT — DIAL TOLL FREE 1-800-642-2444 AT LEAST TWO DAYS BEFORE YOU DIG — UNDERGROUND SERVICE ALERT OF NORTHERN CALIFORNIA

LOS OSOS COMMUNITY SERVICES DISTRICT

MWH Walnut Creek, California

LOS OSOS WASTEWATER PROJECT
GENERAL CIVIL
SAN LUIS OBISPO COUNTY
STANDARD CIVIL DETAILS 1

SHEET BC-GC-066

Job No: 1481166 File: N:\Projects\los_osos\Collect_Sys\BC\civ\BC-GC-066.dgn Plot Date: 09-FEB-2004 15:20

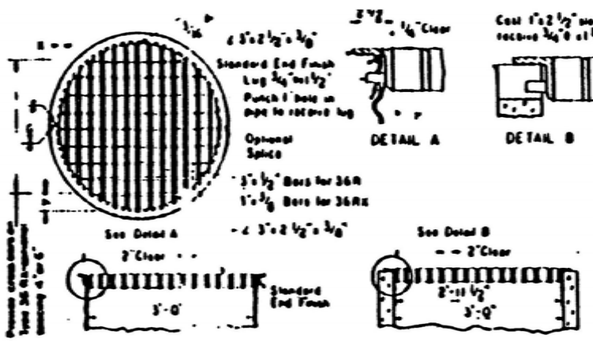

TYPE 36R & 36RX GRATE DETAILS

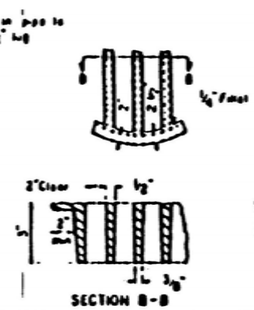

ALTERNATIVE CAST NODULAR IRON GRATE OR CAST STEEL GRATE TYPE 36R & 36RX

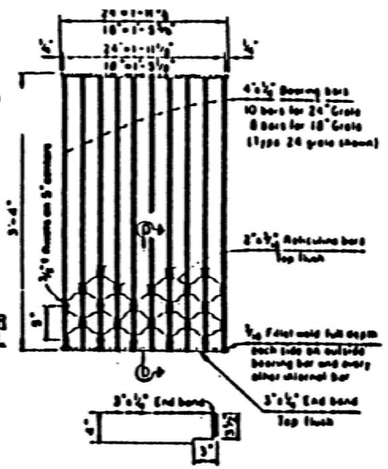

NOTE Weight of 24" Grate = 182 lbs
Weight of 18" Grate = 145 lbs

TYPE 18-8S & 24-10S GRATE
(WELDED STEEL)
RETICULINE TYPE

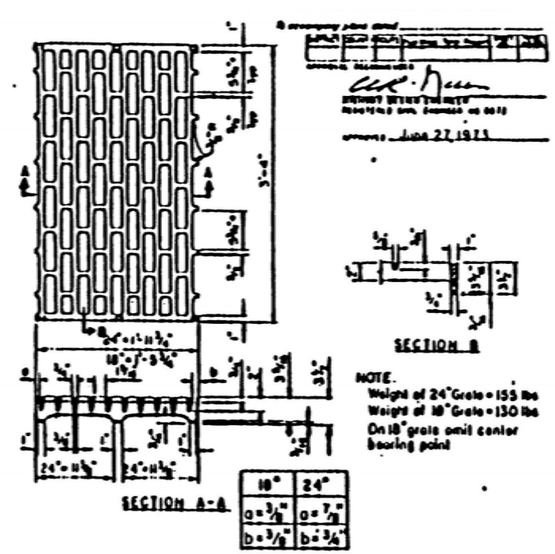

NOTE.
Weight of 24" Grate = 155 lbs
Weight of 18" Grate = 130 lbs
On 18" grate omit center bearing point

18"	24"
a = 3/8"	a = 7/8"
b = 3/8"	b = 3/4"

TYPE 18-8C & 24-10C GRATE
(CAST NODULAR IRON)

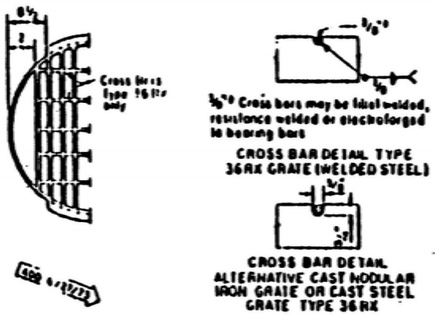

MODIFIED TYPE 36R & 36RX GRATE FOR ODI INLET

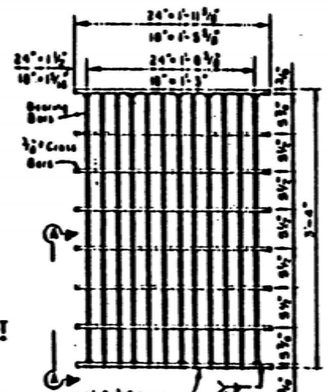

NOTE: Grates shall be dipped or painted in commercial quality asphaltum paint.

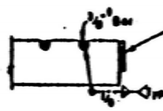

NOTE:
Bearing bars to be 3 1/2"x3/8" bars on 1 7/8" centers
12 bars for 24" Grate - 9 bars for 18" Grates
Type 24 grate shown
Weight of 24" Grate = 192 lbs
Weight of 18" Grate = 145 lbs
3/8" Cross bars may be fillet welded, resistance welded or electroforged to bearing bars

TYPE 18-9X & 24-12X GRATE
(WELDED STEEL)

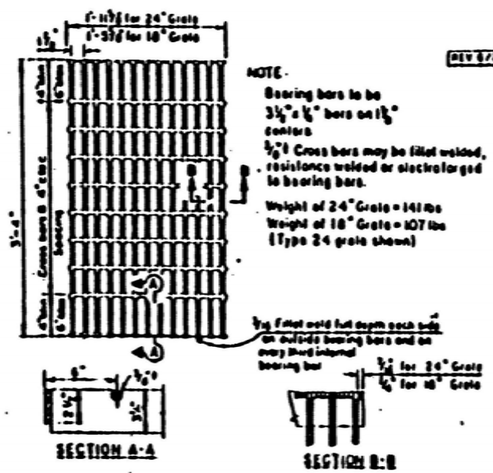

NOTE.
Bearing bars to be 3 1/2"x1/4" bars on 1 7/8" centers
3/8" Cross bars may be fillet welded, resistance welded or electroforged to bearing bars.
Weight of 24" Grate = 141 lbs
Weight of 18" Grate = 107 lbs
(Type 24 grate shown)

TYPE 18-10 & 24-13 GRATE
(WELDED STEEL)

BASIS FOR MISC. IRON & STEEL FINAL PAY WEIGHTS FOR DRAINAGE INLETS.

INLET TYPE	GRATE TYPE	NO GRATES	WEIGHT LBS
CDD	24-10C	1	391
	24-10S	1	331
	24-13C	1	391
	24-13S	1	331
CD, CDL, CI, CI3, CI3, CI4(24")	24-10C	1	391
	24-10S	1	331
	24-13C	1	391
	24-13S	1	331
CI4(18"), CI5, CI6	18-8C	1	192
	18-8S	1	145
	18-10C	1	192
	18-10S	1	145
CI-1, CI-2	18-8C	1	192
	18-8S	1	145
	18-10C	1	192
	18-10S	1	145
CI-3, CI-4	24-10C	1	391
	24-10S	1	331
	24-13C	1	391
	24-13S	1	331

NOTES:
1. When alternative grates are allowed - Final pay based on alternative with the lowest weight.
2. Seal welding of all surfaces not required when grates are galvanized.
3. Use Frame shown on Standard Plan D77-A

NOTE
This plan sheet supersedes plan sheet D77-B, page 47 of the Standard Plans dated January, 1973

SPECIAL DETAILS
GRATE DETAILS

GRATE BAR SPACING TABLE

TYPE	NO BARS	CLEAR BAR	X	3" SPACING	6" SPACING	Z
[illegible]	[illegible]	-	[illegible]	-	-	-
[illegible]	[illegible]	[illegible]	[illegible]	[illegible]	[illegible]	-
[illegible]	[illegible]	[illegible]	[illegible]	[illegible]	[illegible]	-
[illegible]	[illegible]	[illegible]	[illegible]	-	-	[illegible]
[illegible]	[illegible]	[illegible]	[illegible]	[illegible]	[illegible]	[illegible]
[illegible]	[illegible]	[illegible]	[illegible]	[illegible]	[illegible]	[illegible]

INLET TYPE	GRATE TYPE	NO GRATES	WEIGHT LBS.
ODI	[illegible]	[illegible]	[illegible]
CMP, CCP, ECP	[illegible]	[illegible]	[illegible]
ODI	[illegible]	[illegible]	[illegible]
CMP, CCP, ECP	[illegible]	[illegible]	[illegible]

SLOC STANDARD DETAIL NO. C-6

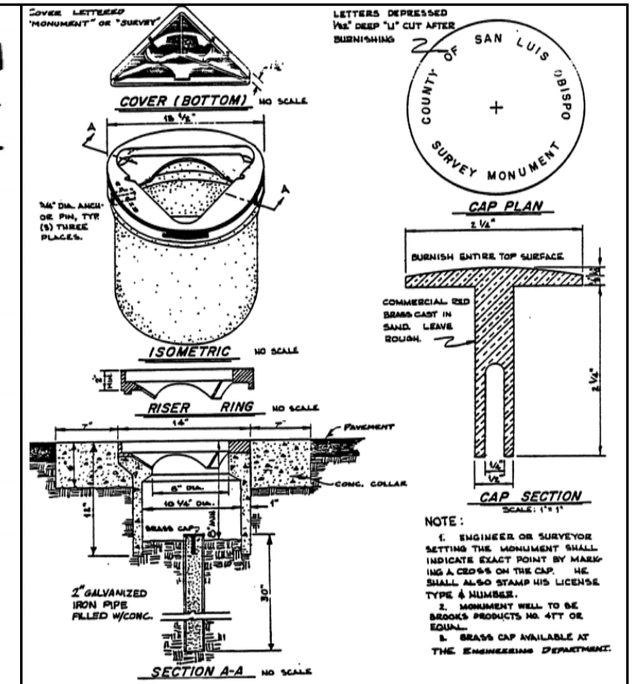

NOTE:
1. ENGINEER OR SURVEYOR SETTING THE MONUMENT SHALL INDICATE EXACT POINT BY MARKING A CROSS ON THE CAP. HE SHALL ALSO STAMP HIS LICENSE TYPE & NUMBER.
2. MONUMENT WELL TO BE BROOKS PRODUCTS NO. 4TT OR EQUAL.
3. BRASS CAP AVAILABLE AT THE ENGINEERING DEPARTMENT.

SLOC STANDARD DETAIL NO. M-1

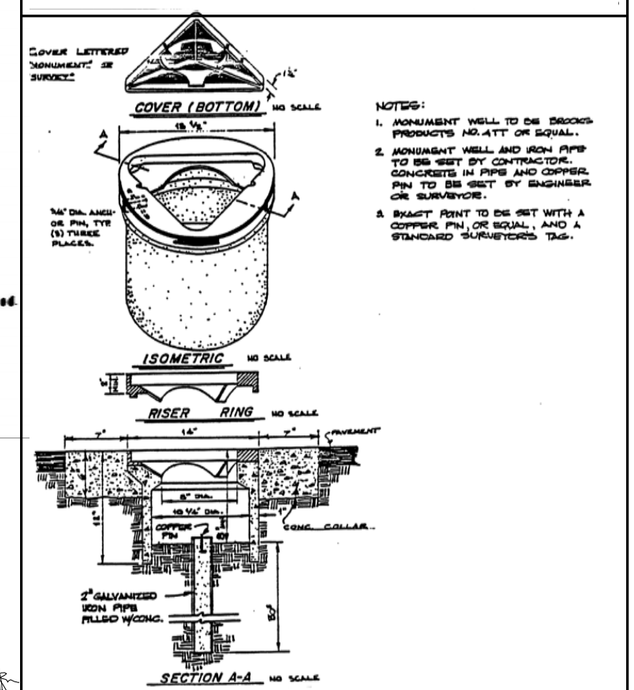

NOTES:
1. MONUMENT WELL TO BE BROOKS PRODUCTS NO. 4TT OR EQUAL.
2. MONUMENT WELL AND IRON PIPE TO BE SET BY CONTRACTOR. CONCRETE IN PIPE AND COPPER PIN TO BE SET BY ENGINEER OR SURVEYOR.
3. EXACT POINT TO BE SET WITH A COPPER PIN, OR EQUAL, AND A STANDARD SURVEYOR'S TAG.

SLOC STANDARD DETAIL NO. M-2

REGISTERED PROFESSIONAL ENGINEER JOHN ARTHUR BERGEN NO. C31069 Exp. 3-31-04 CIVIL STATE OF CALIFORNIA

REV	DATE	BY	DESCRIPTION

SCALE: NO SCALE

WARNING: 0 1/2 1 — IF THIS BAR DOES NOT MEASURE 1" THEN DRAWING IS NOT TO SCALE

DESIGNED L. WONG
DRAWN E. WISNIEWSKI
CHECKED J. BERGEN

SUBMITTED BY
JOHN A. BERGEN — C31069 — LICENSE NO. — 2/16/2004 DATE
STEVE J. HYLAND — C23892 — LICENSE NO. — 2/16/2004 DATE

DIGALERT — DIAL TOLL FREE 1-800-642-2444 AT LEAST TWO DAYS BEFORE YOU DIG — UNDERGROUND SERVICE ALERT OF NORTHERN CALIFORNIA

LOS OSOS COMMUNITY SERVICES DISTRICT

MWH Walnut Creek, California

LOS OSOS WASTEWATER PROJECT
GENERAL CIVIL
SAN LUIS OBISPO COUNTY
STANDARD CIVIL DETAILS 2

SHEET BC-GC-067

Job No: 1481166 File: N:\Projects\los_osos\Collect_Sys\BC\civ\BC-GC-067.dgn Plot Date: 09-FEB-2004 15:21

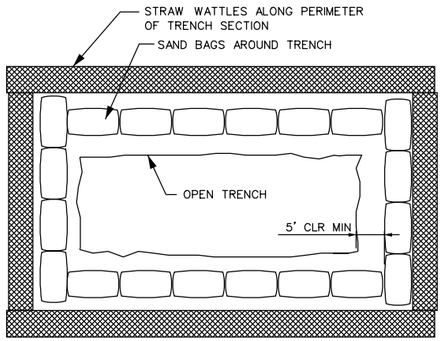

EROSION CONTROL
TRENCH PROTECTION
EC-01

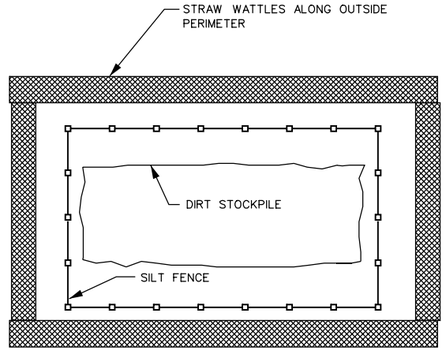

EROSION CONTROL
EXCAVATION STOCKPILE
EC-02

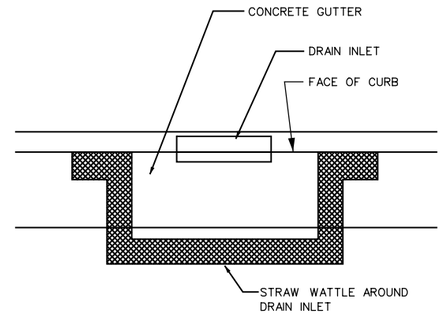

EROSION CONTROL
STORM DRAIN PROTECTION – 1
EC-03

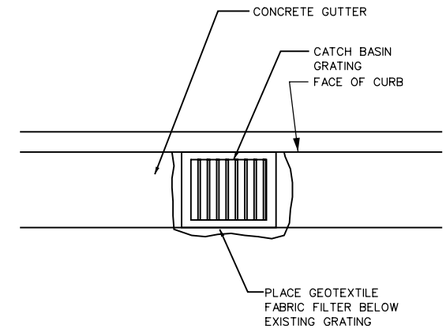

EROSION CONTROL
STORM DRAIN PROTECTION – 2
EC-04

EROSION CONTROL NOTES:

1. DURING CONSTRUCTION THE CONTRACTOR MUST DIRECT ALL RUNOFF TO NON ERODIBLE LOCATIONS
2. A STANDBY CREW FOR EMERGENCY WORK SHALL BE AVAILABLE AT ALL TIMES DURING THE RAINY SEASON. NECESSSARY MATERIALS SHALL BE AVAILABLE AND STOCKPILLED AT CONVENIENT LOCATIONS TO FACILITATE RAPID CONSTRUCTION OF TEMPORARY DEVICES WHEN RAIN IS IMMINENT.
3. THE CONTRACTOR SHALL CONTROL TEMPORARY EROSION CONTROL MEASURES AS SHOWN ON THIS PLAN AND/OR AS DIRECTED BY THE ENGINEER TO CONTROL DRAINAGE WHICH HAS BEEN AFFECTED BY GRADING AND/OR TRENCHING OPERATIONS.
4. ALL PERMANENT SLOPES AND DISTURBED AREAS SHALL BE PLANTED FOR EROSION CONTROL WITH APPROVED PERENNIAL VEGETATION WHICH SHALL BE DENSE AND GROWING PRIOR TO FINAL ACCEPTANCE (SEE THE HYDROSEEDING SPECIFICATION).
5. ALL PROTECTIVE DEVICES TO BE INSTALLED SHALL BE IN PLACE AT THE END OF EACH WORK DAY WHEN THE FIVE-DAY RAIN PROBABILITY EXCEEDS 40 PERCENT.
6. AFTER A RAINSTORM, ALL SILT AND DEBRIS SHALL BE REMOVED FROM CHECK BERMS AND SEDIMENTATION BASIN AND THE BASIN PUMPED DRY.
7. THE CONTRACTOR MAY BE REQUIRED TO INSTALL AND/OR CONSTRUCT ADDITIONAL DRAINAGE STRUCTURES AS NECESSARY TO PREVENT OR CONTROL EROSION.
8. THE CONTRACTOR IS RESPONSABLE FOR CLEANING ANY EROSION OR DEBRIS SPILLING ONTO A PUBLIC STREET.
9. NO CUT OR FILL SLOPES SHALL BE STEEPER THAN 2' HORIZONTAL TO 1' VERTICAL.
10. ALL STRAW WATTLES TO BE INSTALLED PARALLEL TO GRADING CONTOURS.
11. ALSO SEE SPECIFICATION SECTION 01570 STORM WATER POLLUTION PREVENTION PLAN.

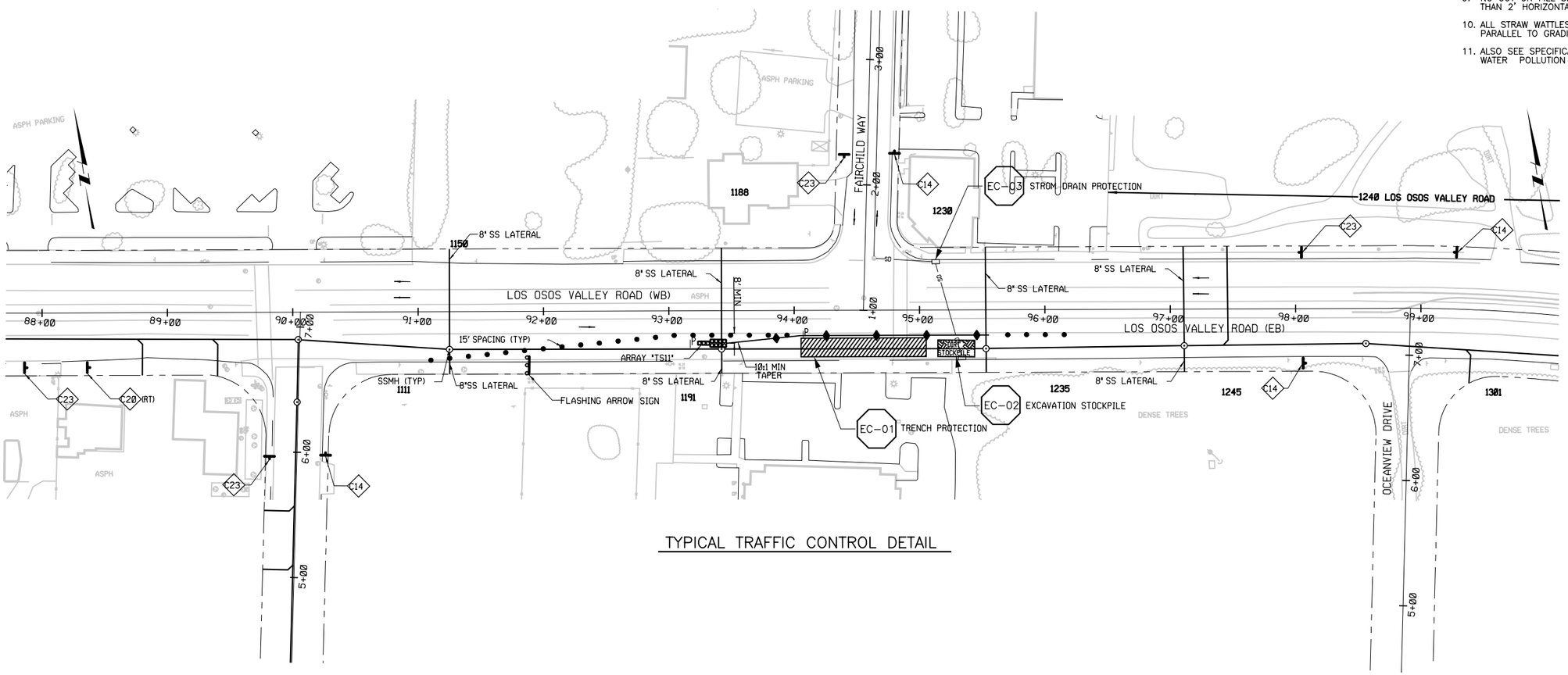

TYPICAL TRAFFIC CONTROL DETAIL

REGISTERED PROFESSIONAL ENGINEER
JOHN ARTHUR BERGEN
NO. C31069
Exp. 3-31-04
CIVIL
STATE OF CALIFORNIA

REV	DATE	BY	DESCRIPTION

SCALE: AS NOTED

WARNING: 0 1/2 1 — IF THIS BAR DOES NOT MEASURE 1" THEN DRAWING IS NOT TO SCALE

DESIGNED L WONG
DRAWN E WISNIEWSKI
CHECKED J BERGEN

SUBMITTED BY
JOHN A. BERGEN — C31069 LICENSE NO. — 2/16/2004 DATE
STEVE J. HYLAND — C23892 LICENSE NO. — 2/16/2004 DATE

DIGALERT — DIAL TOLL FREE 1-800-642-2444 AT LEAST TWO DAYS BEFORE YOU DIG — UNDERGROUND SERVICE ALERT OF NORTHERN CALIFORNIA

LOS OSOS COMMUNITY SERVICES DISTRICT

MWH Walnut Creek, California

LOS OSOS WASTEWATER PROJECT

GENERAL CIVIL
EROSION CONTROL
DETAILS

SHEET BC-GC-068

Job No: 1481166 File: N:\Projects\los_osos\Collect_Sys\BC\civ\BC-GC-068.dgn Plot Date: 09-FEB-2004 15:21

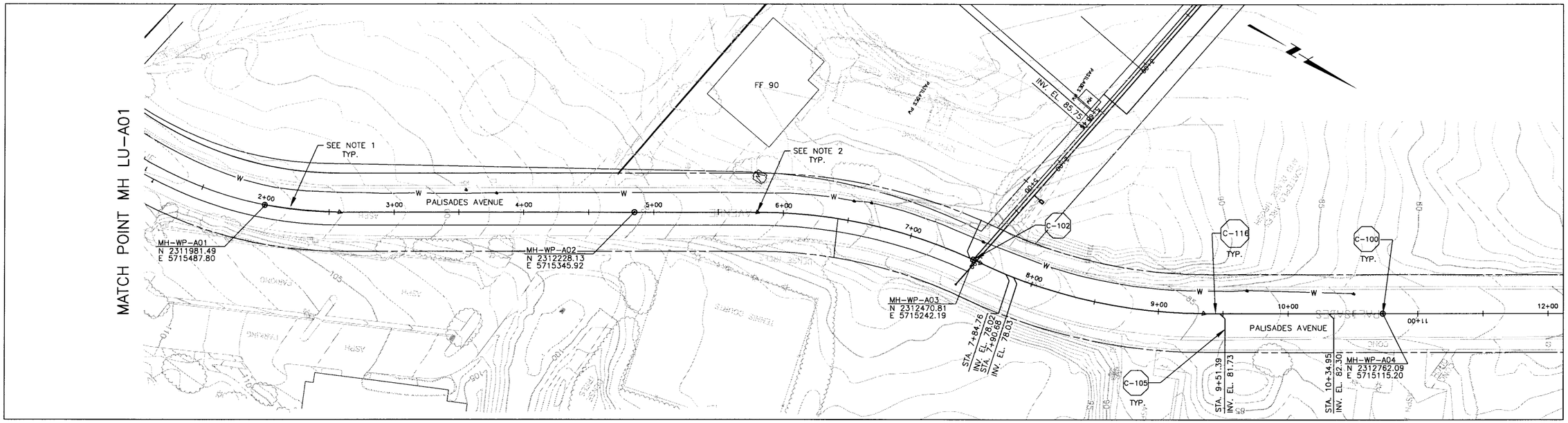

PLAN ON PALISADES AVENUE

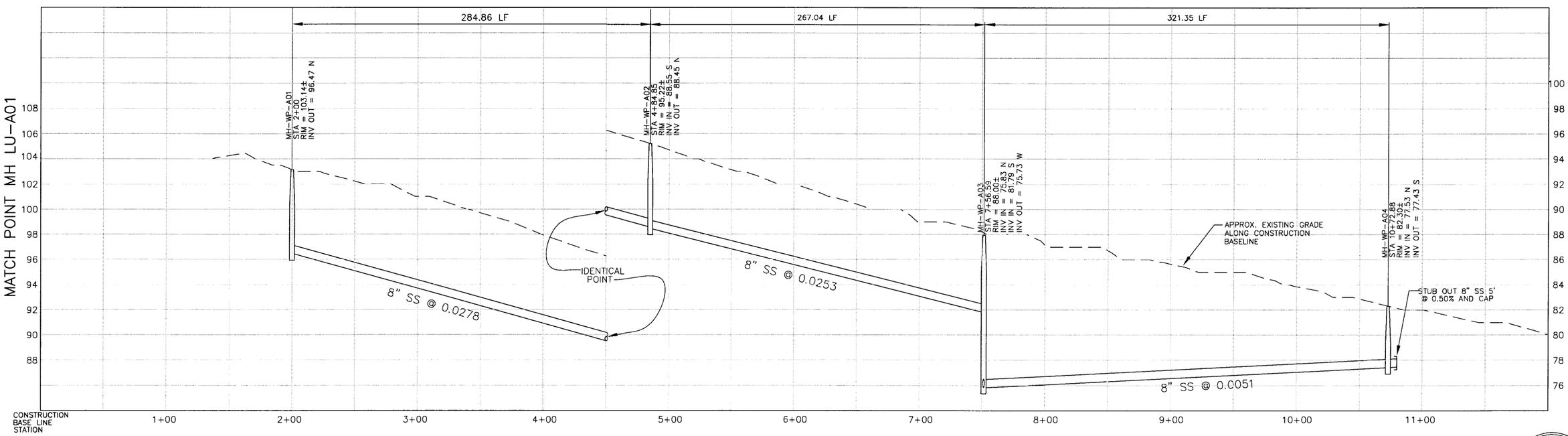

PROFILE ON PALISADES AVENUE

NOTES:

1. SEWER MAIN CURVE RADIUS IS 400' (TYPICAL).
2. ALL DISTURBED CENTERLINE MONUMENTS SHALL BE RESET BY A LICENSED LAND SURVEYOR. MONUMENT WELLS SHALL BE SET IN CONFORMANCE WITH STD. DETAILS SHOWN ON SHEET BC-GC-067
3.

DIGALERT
DIAL TOLL FREE
1-800-642-2444
AT LEAST TWO DAYS BEFORE YOU DIG
UNDERGROUND SERVICE ALERT OF NORTHERN CALIFORNIA

REGISTERED PROFESSIONAL ENGINEER
JEFFREY J. BERGEN
Lic. No. 40,657
Expires 3/07
CIVIL
STATE OF CALIFORNIA

REV	DATE	BY	DESCRIPTION

SCALE
HORZ: 1"=40'
VERT: 1"= 4'

WARNING
0 1/2 1
IF THIS BAR DOES NOT MEASURE 1" THEN DRAWING IS NOT TO SCALE

DESIGNED SH/GH
DRAWN KS/JM/AF/BF
CHECKED SH

SUBMITTED BY
JOHN A. BERGEN — C31069 — LICENSE NO. — 02/16/04 — DATE
STEVE J. HYLAND — C23892 — LICENSE NO. — 02/16/04 — DATE

LOS OSOS
COMMUNITY SERVICES DISTRICT

MWH
Walnut Creek, California

eda design professionals
civil engineers • land surveyors • land planners
1998 santa barbara st. • san luis obispo, ca 93401
ph: 805/546-8658 • email: eda@edainc.com

LOS OSOS WASTEWATER PROJECT
PLAN AND PROFILE
PALISADES AVENUE
STA 7+69.71 TO STA 10+73.00

SHEET
B-PP-100

K:\2265000\base\EDA-Work\PP-SHEETS - 100% Submittal\100 - Palisades.dwg 2/05/04 09:52 AM shawnog JOB NO. 1481166

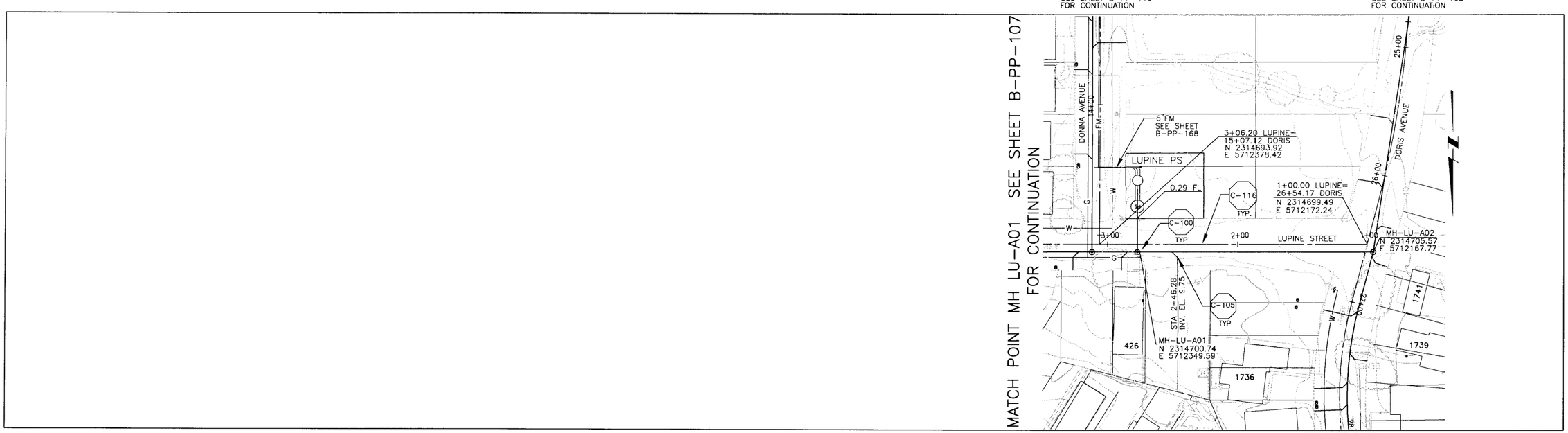

PLAN ON LUPINE STREET

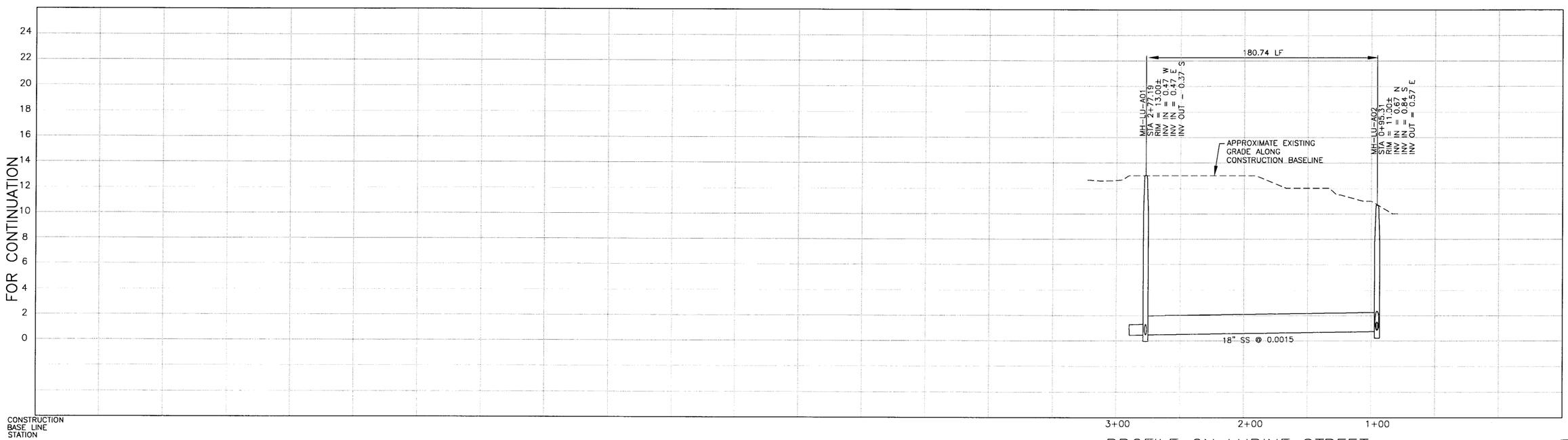

PROFILE ON LUPINE STREET

NOTES:

1.
2.
3.

DIGALERT
DIAL TOLL FREE
1-800-642-2444
AT LEAST TWO DAYS BEFORE YOU DIG
UNDERGROUND SERVICE ALERT OF NORTHERN CALIFORNIA

REGISTERED PROFESSIONAL ENGINEER
JEFFREY J. DARICK
Lic. No. 40,657
Expires 3/07
CIVIL
STATE OF CALIFORNIA

REV	DATE	BY	DESCRIPTION

SCALE
HORZ: 1"=40'
VERT: 1"= 4'

WARNING
0 1/2 1
IF THIS BAR DOES NOT MEASURE 1" THEN DRAWING IS NOT TO SCALE

DESIGNED SH/GH
DRAWN KS/JM/AF/BF
CHECKED SH

SUBMITTED BY
JOHN A. BERGEN — C31069 LICENSE NO. — 02/16/04 DATE
STEVE J. HYLAND — C23892 LICENSE NO. — 02/16/04 DATE

LOS OSOS
COMMUNITY SERVICES DISTRICT

MWH
Walnut Creek, California

eda design professionals
civil engineers • land surveyors • land planners
1998 santa barbara st • san luis obispo, ca 93401
ph: 805/549-8658 • email: eda@edainc.com

LOS OSOS WASTEWATER PROJECT
PLAN AND PROFILE
LUPINE STREET
STA 0+95.31 TO STA 2+76.05

SHEET
B-PP-101

K:\22650000\base\EDA-Work\PP-SHEETS - 100% Submittal\01- Lupine.dwg 2/05/04 08:31 AM shawnag JOB NO. 1481166

MATCH POINT MH LU-A02 SEE SHEET B-PP-118 FOR CONTINUATION

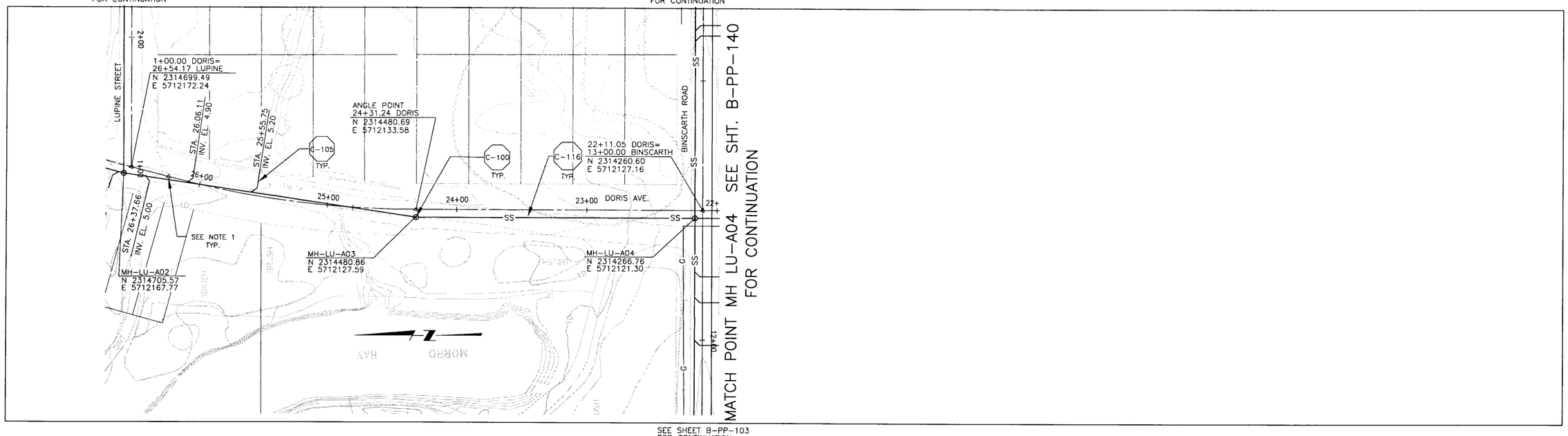

MATCH POINT MH LU-A04 SEE SHT. B-PP-140 FOR CONTINUATION

SEE SHEET B-PP-103 FOR CONTINUATION

PLAN ON DORIS AVENUE

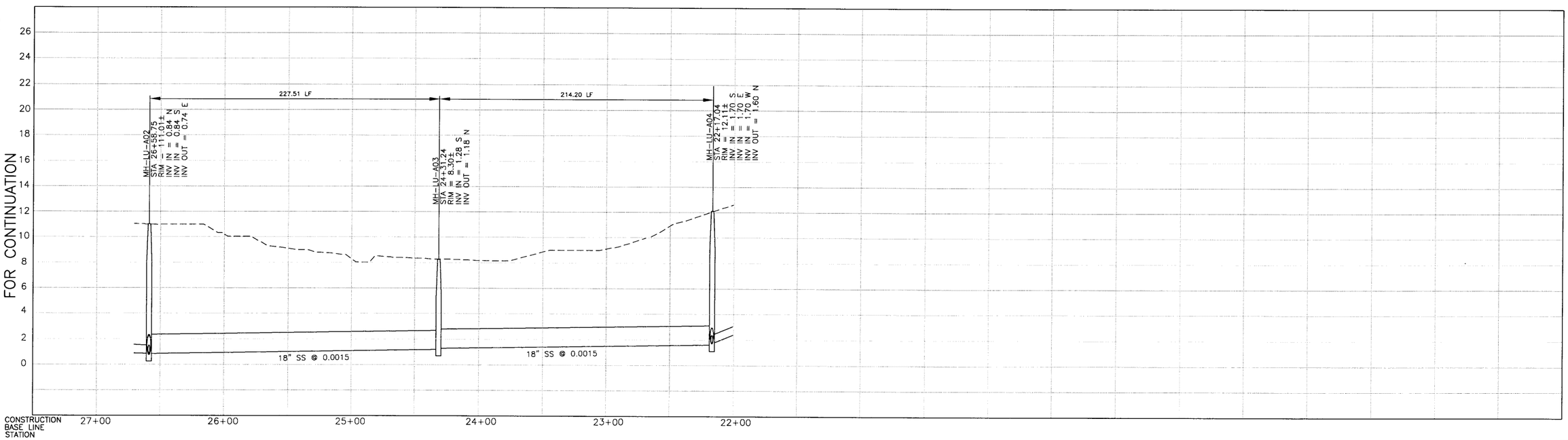

MATCH POINT MH LU-A02 SEE SHEET B-PP-118 FOR CONTINUATION

MATCH POINT MH LU-A04 SEE SHT. B-PP-140 FOR CONTINUATION

PROFILE ON DORIS AVENUE

NOTES:

1. ALL DISTURBED CENTERLINE MONUMENTS SHALL BE RESET BY A LICENSED LAND SURVEYOR. MONUMENT WELLS SHALL BE SET IN CONFORMANCE WITH STD. DETAILS SHOWN ON SHEET B-CC-104.
2.
3.

DIGALERT DIAL TOLL FREE 1-800-642-2444 AT LEAST TWO DAYS BEFORE YOU DIG. UNDERGROUND SERVICE ALERT OF NORTHERN CALIFORNIA

REGISTERED PROFESSIONAL ENGINEER STEVEN J. HYLAND No. 40,657 Expires 3/07 CIVIL STATE OF CALIFORNIA

REV	DATE	BY	DESCRIPTION

SCALE: HORZ: 1"=40' VERT: 1"= 4'

WARNING: 0 1/2 1 — IF THIS BAR DOES NOT MEASURE 1" THEN DRAWING IS NOT TO SCALE

DESIGNED SH/GH
DRAWN KS/JM/AF/BF
CHECKED SH

SUBMITTED BY
JOHN A. BERGEN — C31069 — LICENSE NO. — 02/16/04 — DATE
STEVEN J. HYLAND — C23892 — LICENSE NO. — 02/16/04 — DATE

LOS OSOS COMMUNITY SERVICES DISTRICT

MWH Walnut Creek, California

eda design professionals — civil engineers • land surveyors • land planners — 1998 santa barbara st • san luis obispo, ca 93401 — ph: 805/549-8658 • email: eda@edainc.com

LOS OSOS WASTEWATER PROJECT
PLAN AND PROFILE
DORIS AVENUE
STA 22+17.04 TO STA 26+58.75

SHEET B-PP-102

JOB NO. 1481166

K:\22650000\base\EDA-Work\PP-SHEETS - 100% Submittal\02 - Doris.dwg 2/05/04 08:32 AM shawnsg

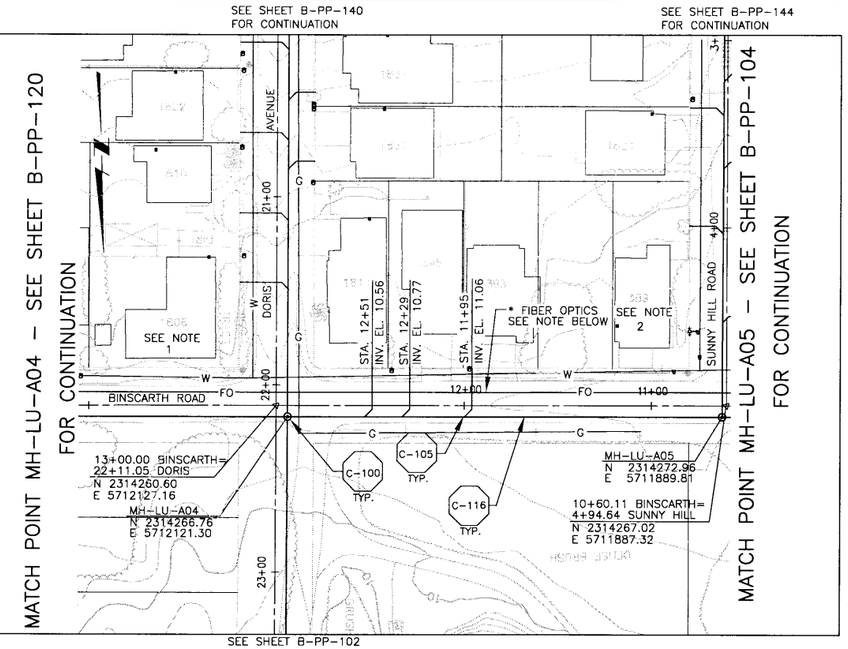

PLAN ON BINSCARTH ROAD

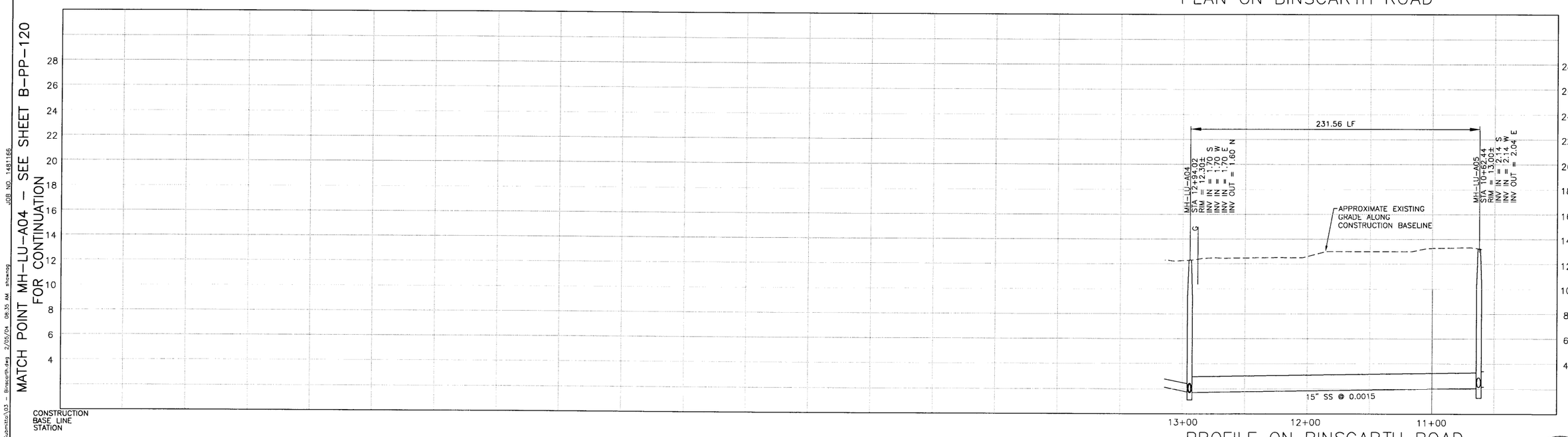

PROFILE ON BINSCARTH ROAD

NOTES:

1. 1806 BINSCARTH SERVED ON DORIS AVE
2. 389 BINSCARTH SERVED ON SUNNY HILL RD.
3.

*NOTE:

ACTUAL LOCATION OF FIBER OPTICS FACILITIES OWNED BY CHARTER COMM. IS UNKNOWN. HORIZONTAL AND VERTICAL LOCATION SHALL BE VERIFIED BY THE CONTRACTOR PRIOR TO CONSTRUCTION.

DIGALERT
DIAL TOLL FREE
1-800-642-2444
AT LEAST TWO DAYS BEFORE YOU DIG
UNDERGROUND SERVICE ALERT OF NORTHERN CALIFORNIA

REGISTERED PROFESSIONAL ENGINEER
JEFFREY J. EMRICH
No. 40,657
Expires 3/07
CIVIL
STATE OF CALIFORNIA

REV	DATE	BY	DESCRIPTION

SCALE: HORZ: 1"=40' VERT: 1"= 4'

WARNING: 0 1/2 1 — IF THIS BAR DOES NOT MEASURE 1" THEN DRAWING IS NOT TO SCALE

DESIGNED SH/GH
DRAWN KS/JM/AF/BF
CHECKED SH

SUBMITTED BY
JOHN A. BERGEN — C31069 — LICENSE NO. — 02/16/04 — DATE
STEVE J. HYLAND — C23892 — LICENSE NO. — 02/16/04 — DATE

LOS OSOS COMMUNITY SERVICES DISTRICT

MWH Walnut Creek, California

eda design professionals
civil engineers • land surveyors • land planners
1998 santa barbara st • san luis obispo, ca 93401
ph: 805/549-8658 • email: eda@edainc.com

LOS OSOS WASTEWATER PROJECT
PLAN AND PROFILE
BINSCARTH ROAD
STA 10+62.44 TO STA 12+94.02

SHEET B-PP-103

K:\12650000\base\EDA-Work\PP-SHEETS - 100% Submits\03 - Binscarth.dwg 2/05/04 08:35 AM shawong JOB NO. 1481166

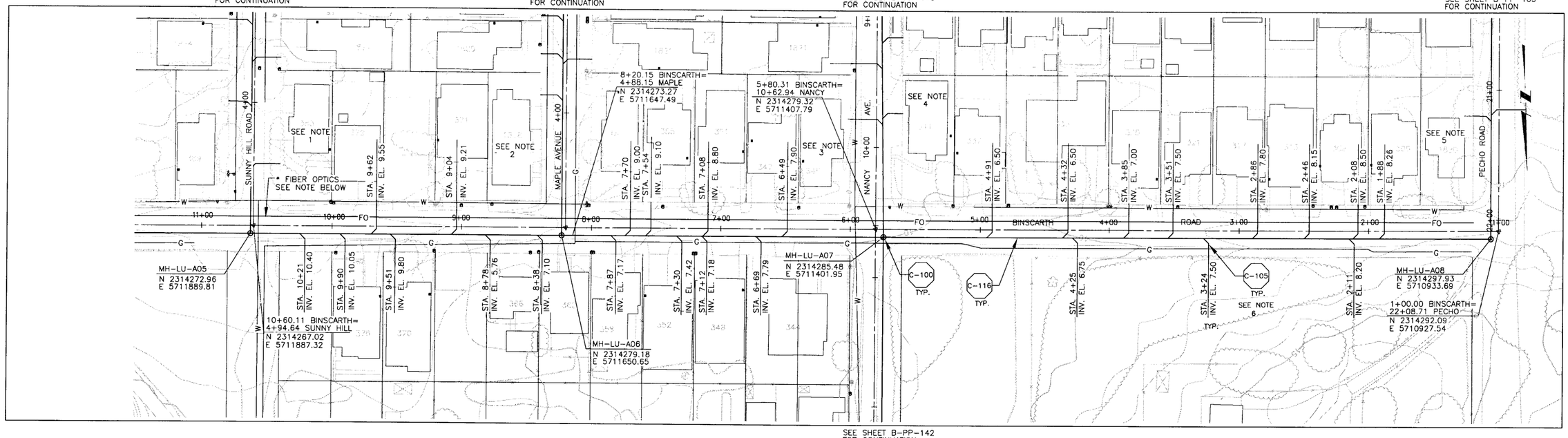

PLAN ON BINSCARTH ROAD

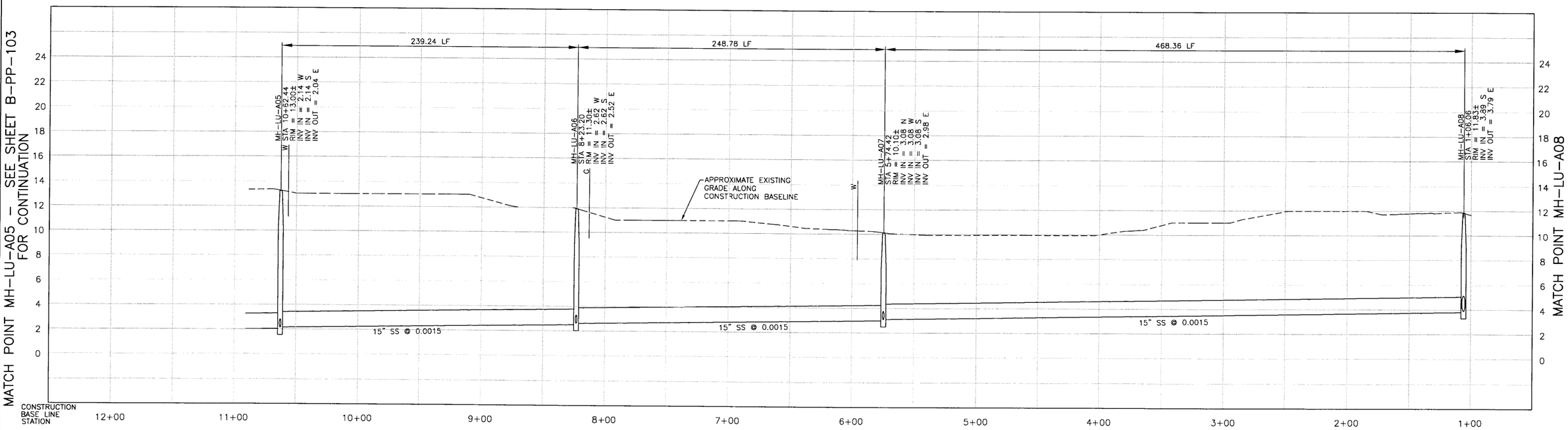

PROFILE ON BINSCARTH ROAD

NOTES:

1. 383 BINSCARTH SERVED ON SUNNY HILL RD.
2. 1818 BINSCARTH SERVED ON MAPLE AVE
3. 345 BINSCARTH SERVED ON NANCY AVE
4. 341 BINSCARTH SERVED ON NANCY AVE
5. 1820 BINSCARTH SERVED ON PECHO RD.
6. LATERAL SERVES ASSESSMENT NO. 2738 (1780 PECHO)

*NOTE:

ACTUAL LOCATION OF FIBER OPTICS FACILITIES OWNED BY CHARTER COMM. IS UNKNOWN. HORIZONTAL AND VERTICAL LOCATION SHALL BE VERIFIED BY THE CONTRACTOR PRIOR TO CONSTRUCTION.

DIGALERT
DIAL TOLL FREE 1-800-642-2444 AT LEAST TWO DAYS BEFORE YOU DIG
UNDERGROUND SERVICE ALERT OF NORTHERN CALIFORNIA

REGISTERED PROFESSIONAL ENGINEER JEFFREY J. EMRICK Lic. No. 40,657 Expires 3/07 CIVIL STATE OF CALIFORNIA

REV	DATE	BY	DESCRIPTION

SCALE: HORZ: 1"=40' VERT: 1"= 4'

WARNING: 0 1/2 1 IF THIS BAR DOES NOT MEASURE 1" THEN DRAWING IS NOT TO SCALE

DESIGNED SH/GH
DRAWN KS/JM/AF/BF
CHECKED SH

SUBMITTED BY
JOHN A. BERGEN — C31069 LICENSE NO. — 02/16/04 DATE
STEVE J. HYLAND — C23892 LICENSE NO. — 02/16/04 DATE

LOS OSOS COMMUNITY SERVICES DISTRICT

MWH Walnut Creek, California

eda design professionals — civil engineers • land surveyors • land planners 1998 santa barbara st • san luis obispo, ca 93401 ph: 805/549-8658 • email: eda@edainc.com

LOS OSOS WASTEWATER PROJECT
PLAN AND PROFILE
BINSCARTH ROAD
STA 1+06.06 TO STA 10+62.44

SHEET B-PP-104

K:\22650000\base\EDA-Work\PP-SHEETS - 100% Submittal\04 - Binscarth.dwg 2/05/04 08:38 AM shawnag JOB NO. 1481166

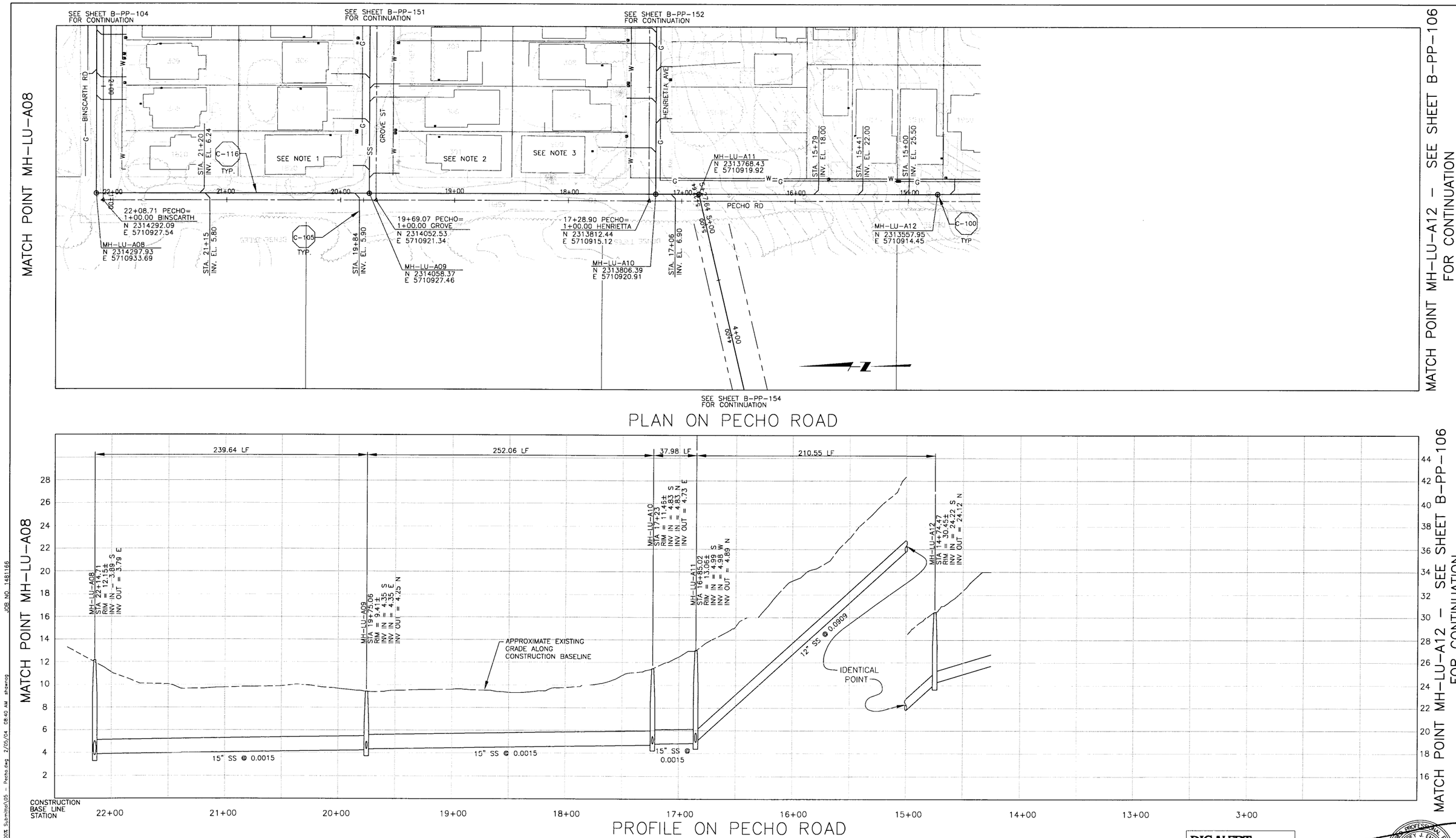

NOTES:

1. 1820 PECHO RD. SERVED ON GROVE ST.
2. 301 PECHO RD. SERVED ON GROVE ST.
3. 1900 PECHO RD. SERVED ON HENRIETTA

DIGALERT DIAL TOLL FREE 1-800-642-2444 AT LEAST TWO DAYS BEFORE YOU DIG UNDERGROUND SERVICE ALERT OF NORTHERN CALIFORNIA

REGISTERED PROFESSIONAL ENGINEER JEFFREY J. EMRICK Lic. No. 40,657 Expires 3/07 CIVIL STATE OF CALIFORNIA

REV	DATE	BY	DESCRIPTION

SCALE: HORZ: 1"=40' VERT: 1"= 4'

WARNING: 0 1/2 1 IF THIS BAR DOES NOT MEASURE 1" THEN DRAWING IS NOT TO SCALE

DESIGNED SH/GH
DRAWN KS/JM/AF/BF
CHECKED SH

SUBMITTED BY
JOHN A. BERGEN — C31069 LICENSE NO. — 02/16/04 DATE
STEVE J. HYLAND — C23892 LICENSE NO. — 02/16/04 DATE

LOS OSOS COMMUNITY SERVICES DISTRICT

MWH Walnut Creek, California

eda design professionals — civil engineers • land surveyors • land planners 1998 santa barbara st • san luis obispo, ca 93401 ph: 805/549-8658 • email: eda@edainc.com

LOS OSOS WASTEWATER PROJECT
PLAN AND PROFILE
PECHO ROAD
STA 14+74.47 TO STA 22+14.71

SHEET B-PP-105

K:\22650000\base\EDA-Work\PP-SHEETS - 100% Submittal\05 - Pecho.dwg 2/05/04 08:40 AM shawnag JOB NO. 1481166

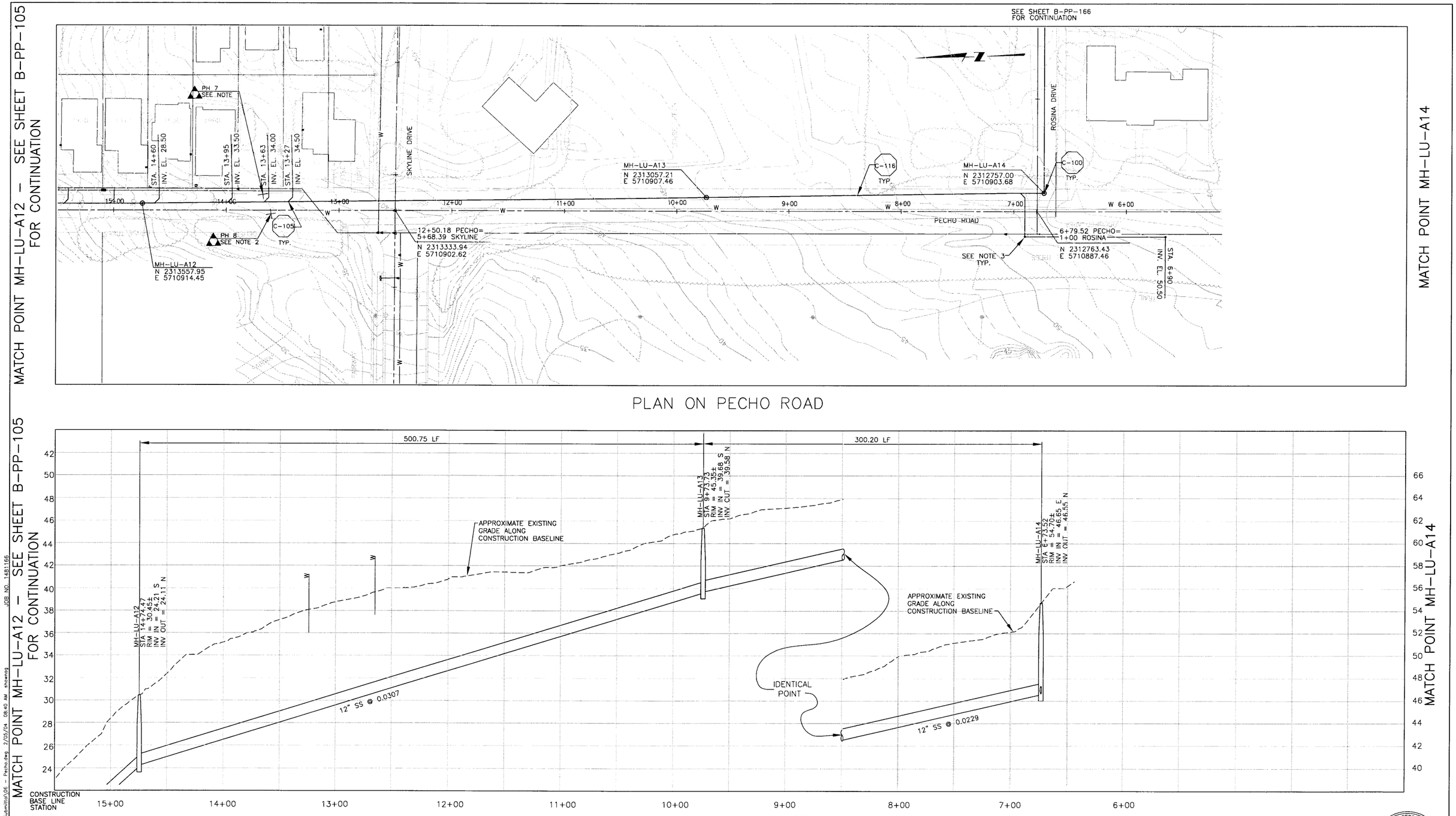

NOTES:

1. 2" GAS TOP OF PIPE 42" BELOW GROUND
2. 6" WATER TOP OF PIPE 47" BELOW GROUND
3. CONSTRUCT SANITARY SEWER CLEANOUT W/TRAFFIC RATED LID

DIGALERT DIAL TOLL FREE 1-800-642-2444 AT LEAST TWO DAYS BEFORE YOU DIG UNDERGROUND SERVICE ALERT OF NORTHERN CALIFORNIA

REGISTERED PROFESSIONAL ENGINEER JEFFREY J. EMRICK Lic. No. 40,657 Expires 3/07 CIVIL STATE OF CALIFORNIA

REV	DATE	BY	DESCRIPTION

SCALE: HORZ: 1"=40' VERT: 1"= 4'

WARNING: 0 1/2 1 IF THIS BAR DOES NOT MEASURE 1" THEN DRAWING IS NOT TO SCALE

DESIGNED SH/GH
DRAWN KS/JM/AF/BF
CHECKED SH

SUBMITTED BY
JOHN A. BERGEN — C31069 LICENSE NO. — 02/16/04 DATE
STEVE J. HYLAND — C23892 LICENSE NO. — 02/16/04 DATE

LOS OSOS COMMUNITY SERVICES DISTRICT

MWH Walnut Creek, California

eda design professionals — civil engineers • land surveyors • land planners 1998 santa barbara st • san luis obispo, ca 93401 ph: 805/549-8658 • email: eda@edainc.com

LOS OSOS WASTEWATER PROJECT
PLAN AND PROFILE
PECHO ROAD
STA 6+73.52 TO STA 14+74.47

SHEET B-PP-106

K:\2265000\base\EDA-Work\PP-SHEETS - 100% Submittal\06 - Pecho.dwg 2/05/04 08:40 AM shawnag JOB NO. 1481166

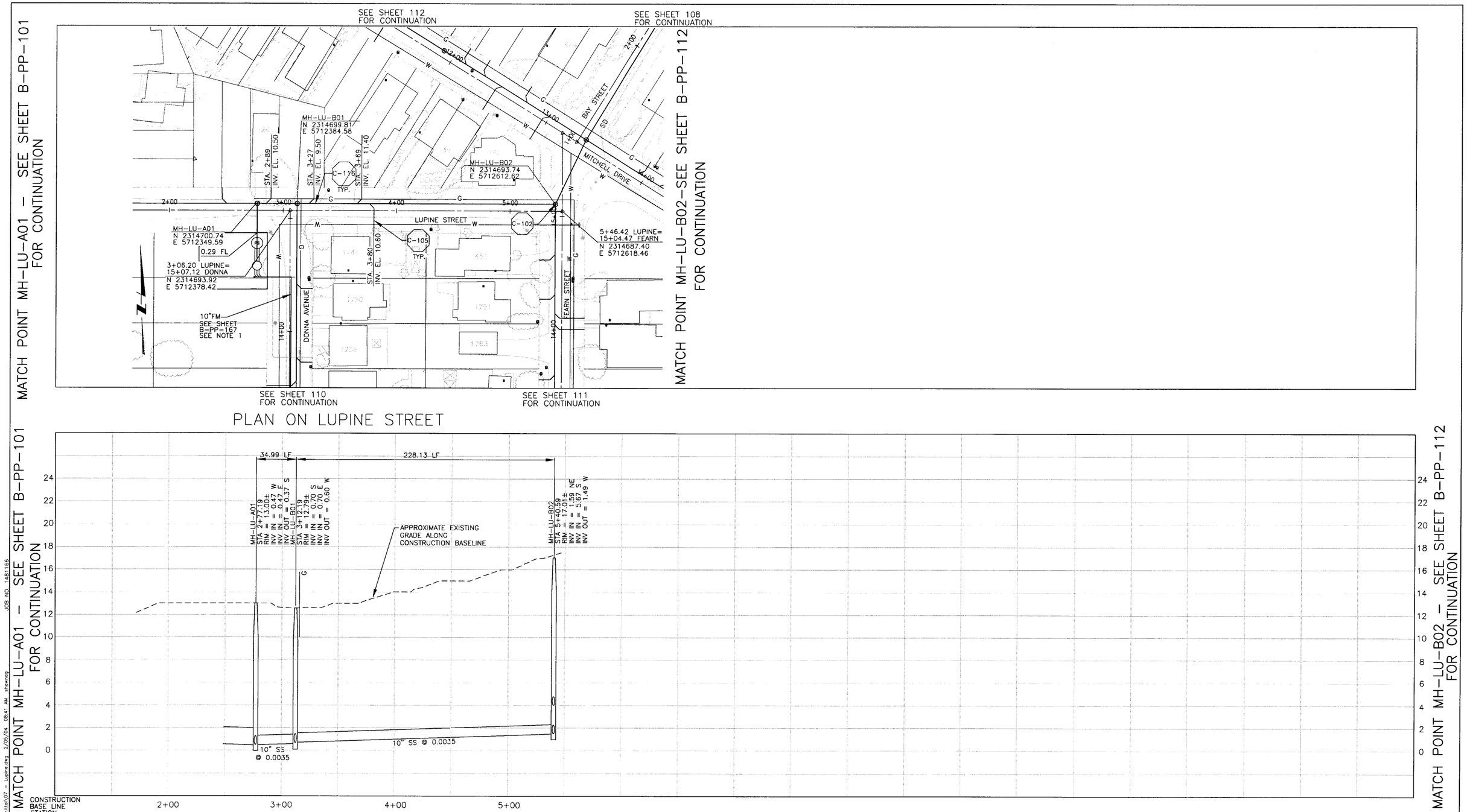

NOTES:

1. SEE SHEET B-C-201 FOR LIFT STATION SITE PLAN.
2.
3.

DIGALERT
DIAL TOLL FREE 1-800-642-2444 AT LEAST TWO DAYS BEFORE YOU DIG
UNDERGROUND SERVICE ALERT OF NORTHERN CALIFORNIA

REGISTERED PROFESSIONAL ENGINEER JEFFREY J. EMRICK Lic. No. 40,657 Expires 6/07 CIVIL STATE OF CALIFORNIA

REV	DATE	BY	DESCRIPTION

SCALE: HORZ: 1"=40' VERT: 1"= 4'

WARNING: 0 1/2 1 IF THIS BAR DOES NOT MEASURE 1" THEN DRAWING IS NOT TO SCALE

DESIGNED SH/GH
DRAWN KS/JM/AF/BF
CHECKED SH

SUBMITTED BY
JOHN A. BERGEN — C31069 LICENSE NO. — 02/16/04 DATE
STEVE J. HYLAND — C23892 LICENSE NO. — 02/16/04 DATE

LOS OSOS COMMUNITY SERVICES DISTRICT

MWH Walnut Creek, California

eda design professionals — civil engineers • land surveyors • land planners 1998 santa barbara st • san luis obispo, ca 93401 ph: 805/549-8658 • email: eda@edainc.com

LOS OSOS WASTEWATER PROJECT
PLAN AND PROFILE
LUPINE STREET
STA 2+76.05 TO STA 5+31.74

SHEET B-PP-107

K:\22650000\base\EDA-Work\PP-SHEETS - 100% Submittal\07 - Lupine.dwg 2/05/04 08:41 AM shawnag JOB NO. 1481166

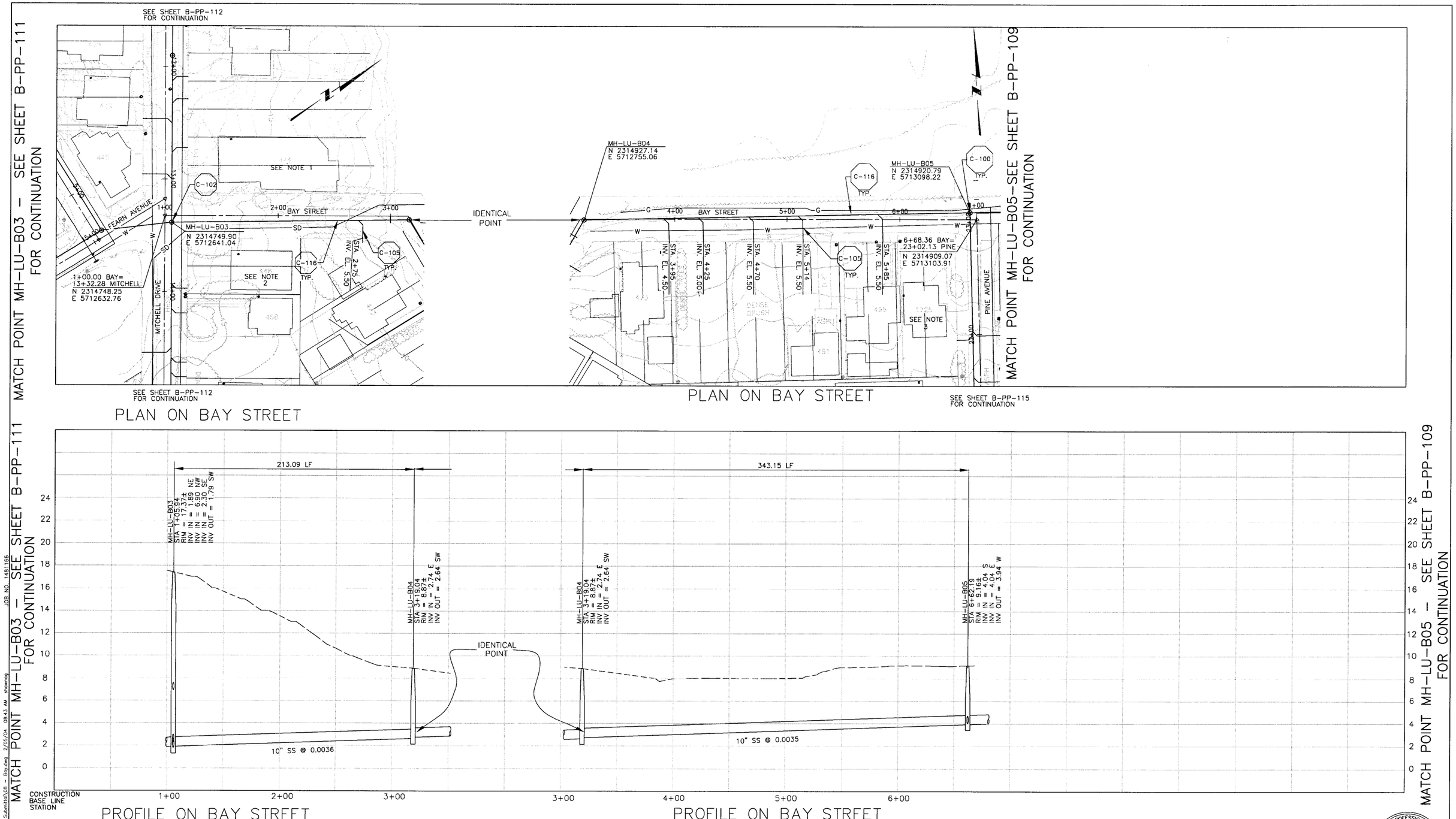

NOTES:

1. 444 BAY ST. SERVED ON MITCHELL DRIVE
2. 448 BAY ST. SERVED ON MITCHELL DRIVE
3. 1725 BAY ST. SERVED ON PINE AVE

DIGALERT DIAL TOLL FREE 1-800-642-2444 AT LEAST TWO DAYS BEFORE YOU DIG UNDERGROUND SERVICE ALERT OF NORTHERN CALIFORNIA

REGISTERED PROFESSIONAL ENGINEER JEFFREY G. EMRICK No. 40,657 Exp. 3/08 CIVIL STATE OF CALIFORNIA

REV	DATE	BY	DESCRIPTION

SCALE: HORZ: 1"=40' VERT: 1"= 4'

WARNING: 0 1/2 1 IF THIS BAR DOES NOT MEASURE 1" THEN DRAWING IS NOT TO SCALE

DESIGNED SH/GH
DRAWN KS/JM/AF/BF
CHECKED SH

SUBMITTED BY
JOHN A. BERGEN — C31069 LICENSE NO. — 02/16/04 DATE
STEVE J. HYLAND — C23892 LICENSE NO. — 02/16/04 DATE

LOS OSOS COMMUNITY SERVICES DISTRICT

MWH Walnut Creek, California

eda design professionals — civil engineers • land surveyors • land planners 1998 santa barbara st • san luis obispo, ca 93401 ph: 805/549-8658 • email: eda@edainc.com

LOS OSOS WASTEWATER PROJECT
PLAN AND PROFILE
BAY STREET
STA 1+05.94 TO STA 6+62.19

SHEET B-PP-108

K:\22650000\base\EDA-Work\PP-SHEETS - 100% Submittal\08 - Bay.dwg 2/05/04 08:43 AM shawnag JOB NO. 1481166

MATCH POINT MH-LU-B05 - SEE SHEET B-PP-108 FOR CONTINUATION

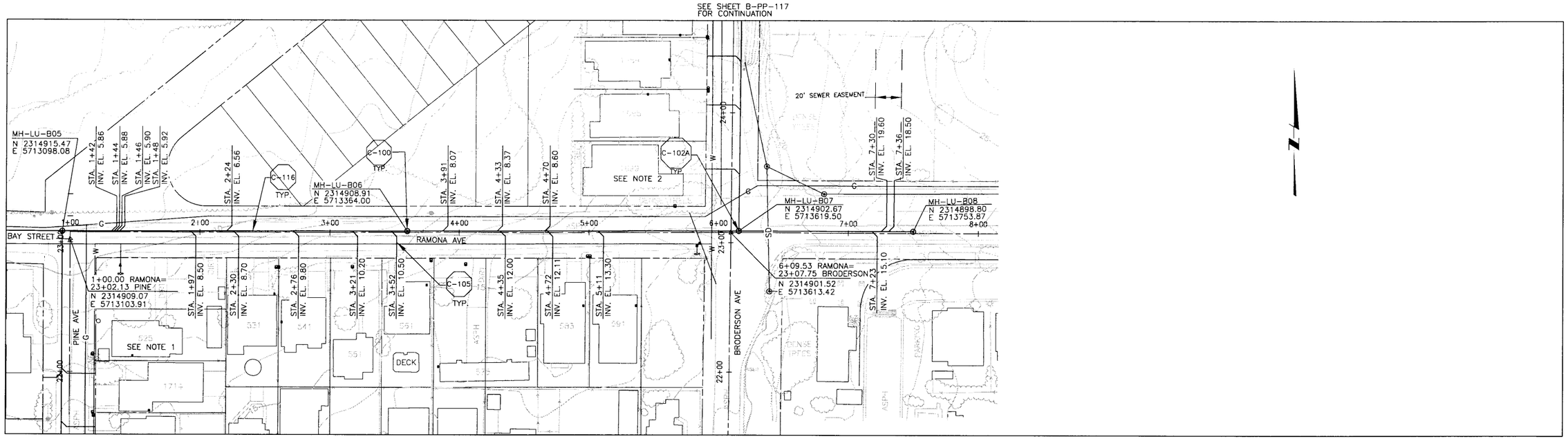

PLAN ON RAMONA AVENUE

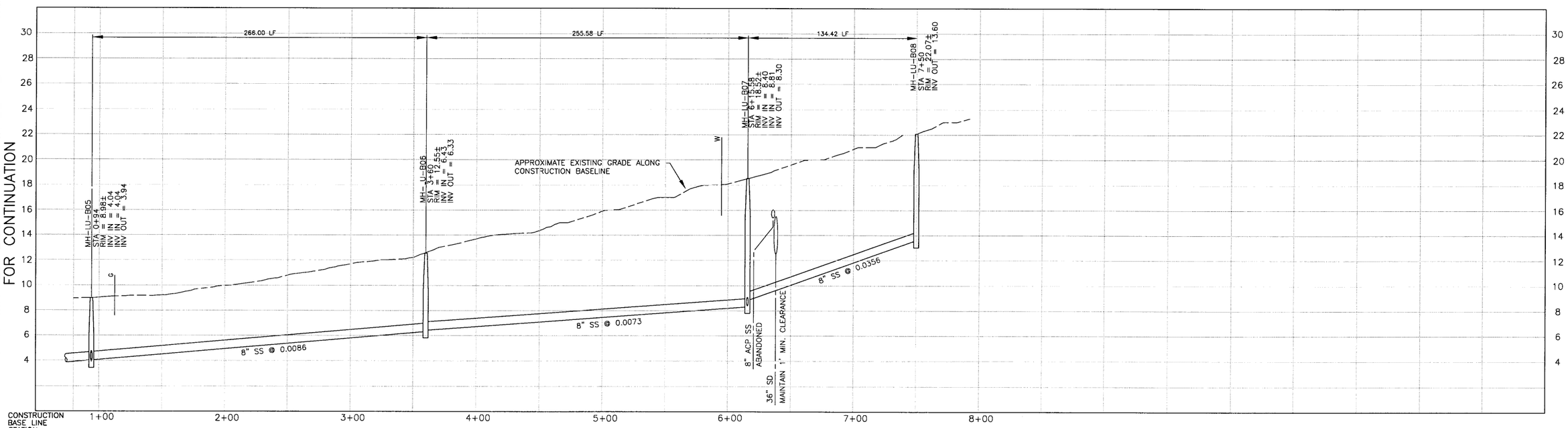

PROFILE ON RAMONA AVENUE

NOTES:

1. 525 RAMONA AVE SERVED ON PINE AVE
2. 1699 RAMONA SERVED ON BRODERSON
3.

DIGALERT
DIAL TOLL FREE 1-800-642-2444
AT LEAST TWO DAYS BEFORE YOU DIG
UNDERGROUND SERVICE ALERT OF NORTHERN CALIFORNIA

REGISTERED PROFESSIONAL ENGINEER JEFFREY J. EMRICK No. 40,657 Expires 3/07 CIVIL STATE OF CALIFORNIA

REV	DATE	BY	DESCRIPTION

SCALE: HORZ: 1"=40' VERT: 1"= 4'

WARNING: 0 1/2 1 — IF THIS BAR DOES NOT MEASURE 1" THEN DRAWING IS NOT TO SCALE

DESIGNED SH/GH
DRAWN KS/JM/AF/BF
CHECKED SH

SUBMITTED BY
JOHN A. BERGEN — C31069 LICENSE NO. — 02/16/04 DATE
STEVE J. HYLAND — C23892 LICENSE NO. — 02/16/04 DATE

LOS OSOS COMMUNITY SERVICES DISTRICT

MWH Walnut Creek, California

eda design professionals — civil engineers • land surveyors • land planners — 1998 santa barbara st • san luis obispo, ca 93401 — ph: 805/549-8658 • email: eda@edainc.com

LOS OSOS WASTEWATER PROJECT
PLAN AND PROFILE
RAMONA AVENUE
STA 0+94.00 TO STA 7+50.00

SHEET B-PP-109

K:\22650000\base\EDA-Work\PP-SHEETS - 100% Submittal\09 - Ramona.dwg 2/05/04 08:45 AM shawnag JOB NO. 1481166

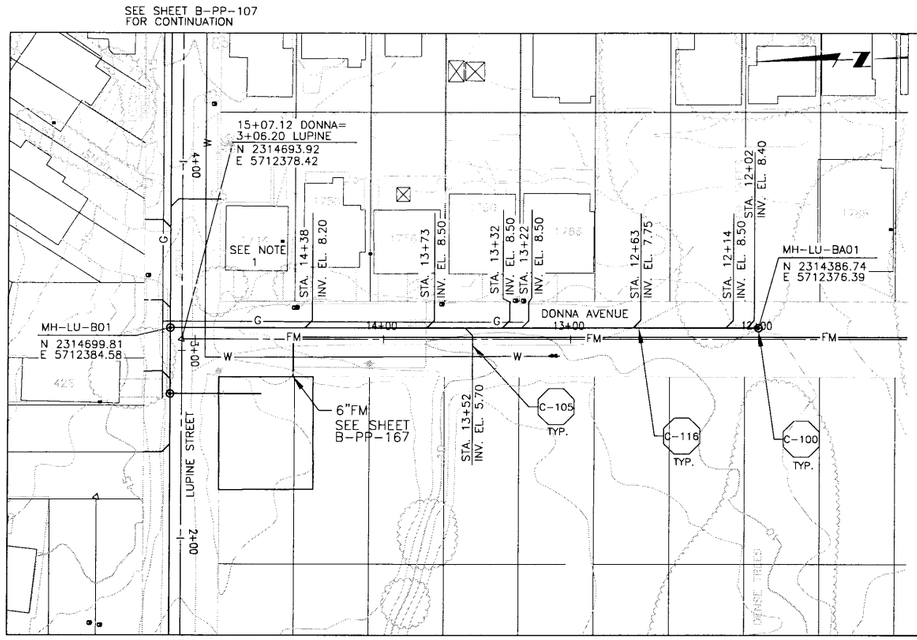

PLAN ON DONNA AVENUE

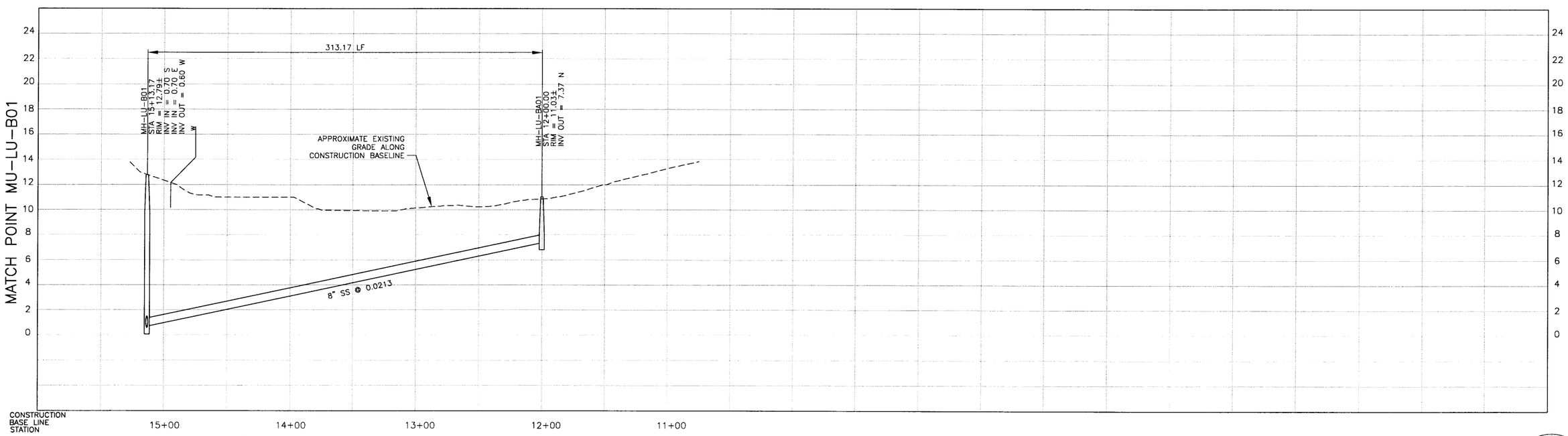

PROFILE ON DONNA AVENUE

NOTES:

1. 1744 DONNA AVE SERVED ON LUPINE ST.
2.
3.

DIGALERT
DIAL TOLL FREE
1-800-642-2444
AT LEAST TWO DAYS BEFORE YOU DIG
UNDERGROUND SERVICE ALERT OF NORTHERN CALIFORNIA

REGISTERED PROFESSIONAL ENGINEER
JEFFREY J. EMRICK
No. 40,657
Expires 3/07
CIVIL
STATE OF CALIFORNIA

REV	DATE	BY	DESCRIPTION

SCALE
HORZ: 1"=40'
VERT: 1"= 4'

WARNING
0 1/2 1
IF THIS BAR DOES NOT MEASURE 1" THEN DRAWING IS NOT TO SCALE

DESIGNED SH/GH
DRAWN KS/JM/AF/BF
CHECKED SH

SUBMITTED BY
JOHN A. BERGEN — C31069 LICENSE NO. — 02/16/04 DATE
STEVEN J. HYLAND — C23892 LICENSE NO. — 02/16/04 DATE

LOS OSOS
COMMUNITY SERVICES DISTRICT

MWH
Walnut Creek, California

eda design professionals
civil engineers • land surveyors • land planners
1998 santa barbara st • san luis obispo, ca 93401
ph: 805/549-8658 • email: eda@edainc.com

LOS OSOS WASTEWATER PROJECT
PLAN AND PROFILE
DONNA AVENUE
STA 12+00.00 TO STA 15+13.17

SHEET
B-PP-110

K:\22650000\base\EDA-Work\PP-SHEETS - 100% Submittal\10 - Donna.dwg 2/05/04 08:48 AM shawnag
JOB NO. 1481166

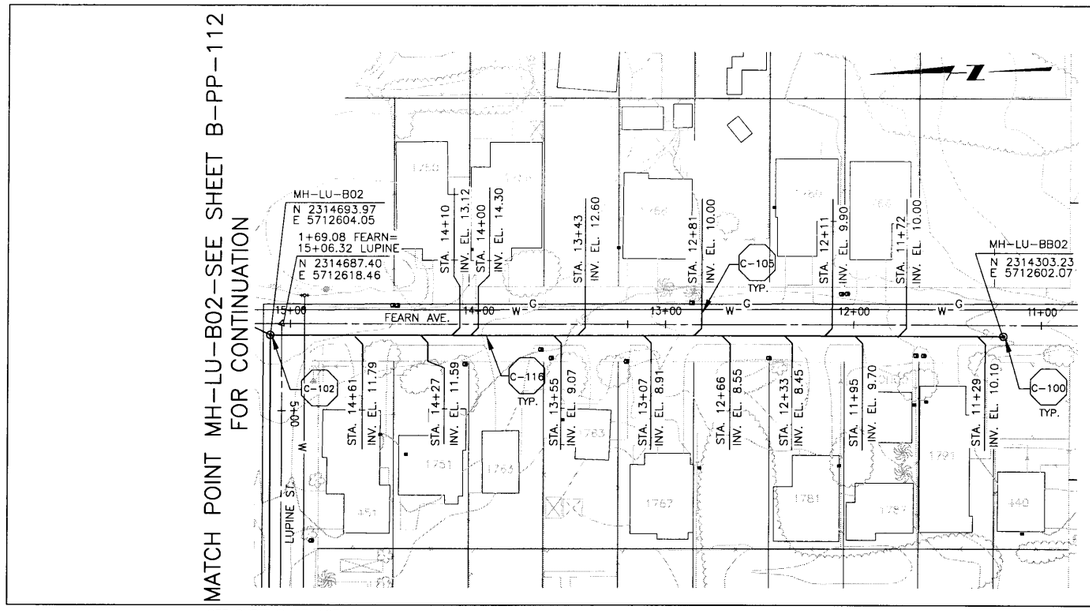

PLAN ON FEARN AVENUE

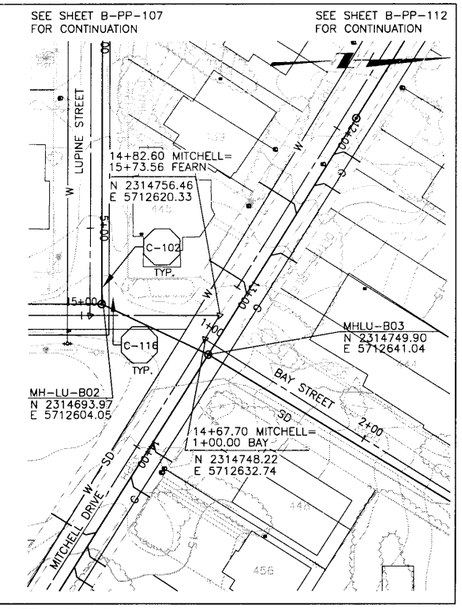

PLAN ON FEARN AVENUE

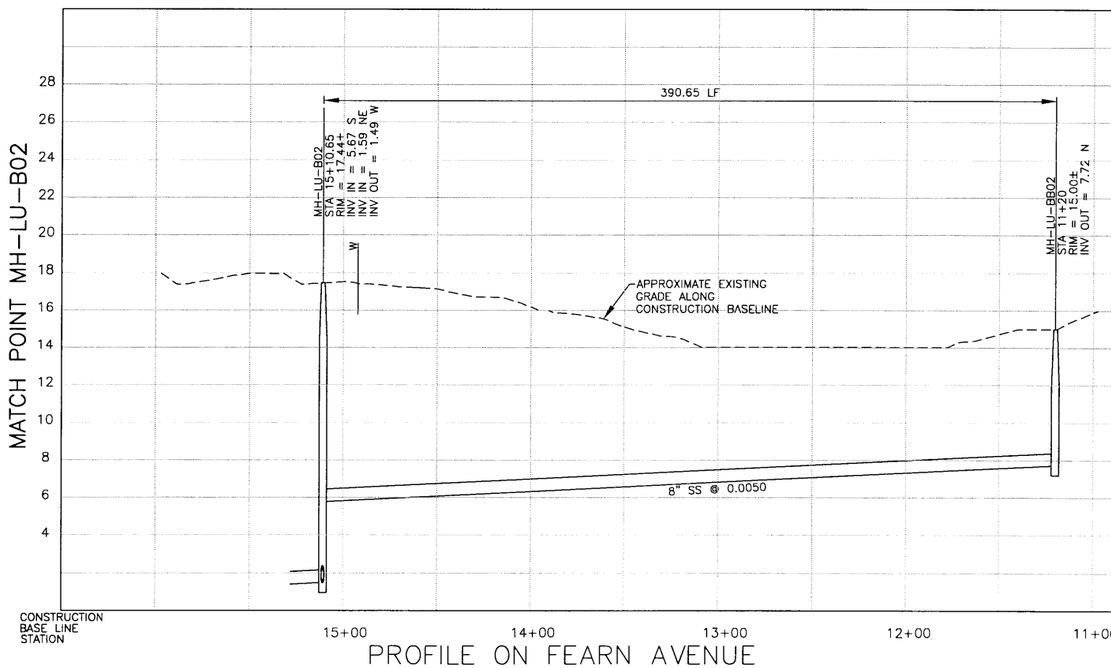

PROFILE ON FEARN AVENUE

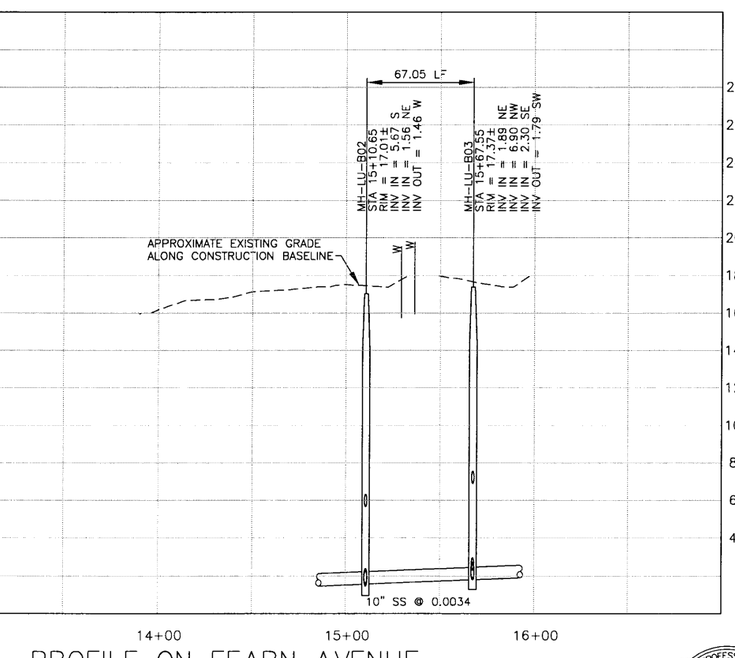

PROFILE ON FEARN AVENUE

NOTES:

1.
2.
3.

DIGALERT
DIAL TOLL FREE
1-800-642-2444
AT LEAST TWO DAYS BEFORE YOU DIG
UNDERGROUND SERVICE ALERT OF NORTHERN CALIFORNIA

REGISTERED PROFESSIONAL ENGINEER
JEFFREY J. EMRICK
No. 40,657
Expires 3/07
STATE OF CALIFORNIA

REV	DATE	BY	DESCRIPTION

SCALE
HORZ: 1"=40'
VERT: 1"= 4'

WARNING
0 1/2 1
IF THIS BAR DOES NOT MEASURE 1" THEN DRAWING IS NOT TO SCALE

DESIGNED SH/GH
DRAWN KS/JM/AF/BF
CHECKED SH

SUBMITTED BY
JOHN A. BERGEN — C31069 LICENSE NO. — 02/16/04 DATE
STEVE J. HYLAND — C23892 LICENSE NO. — 02/16/04 DATE

LOS OSOS
COMMUNITY SERVICES DISTRICT

MWH
Walnut Creek, California

eda design professionals
civil engineers • land surveyors • land planners
1998 santa barbara st • san luis obispo, ca 93401
ph: 805/549-8658 • email: eda@edainc.com

LOS OSOS WASTEWATER PROJECT
PLAN AND PROFILE
FEARN AVENUE
STA 11+20 TO STA 15+67.55

SHEET
B-PP-111

JOB NO. 1481166
K:\12650000\base\EDA-Work\PP-SHEETS - 100% Submittal\11 - Fea...dwg 2/05/04 08:52 AM shawnag

MATCH POINT MH-LU-B03

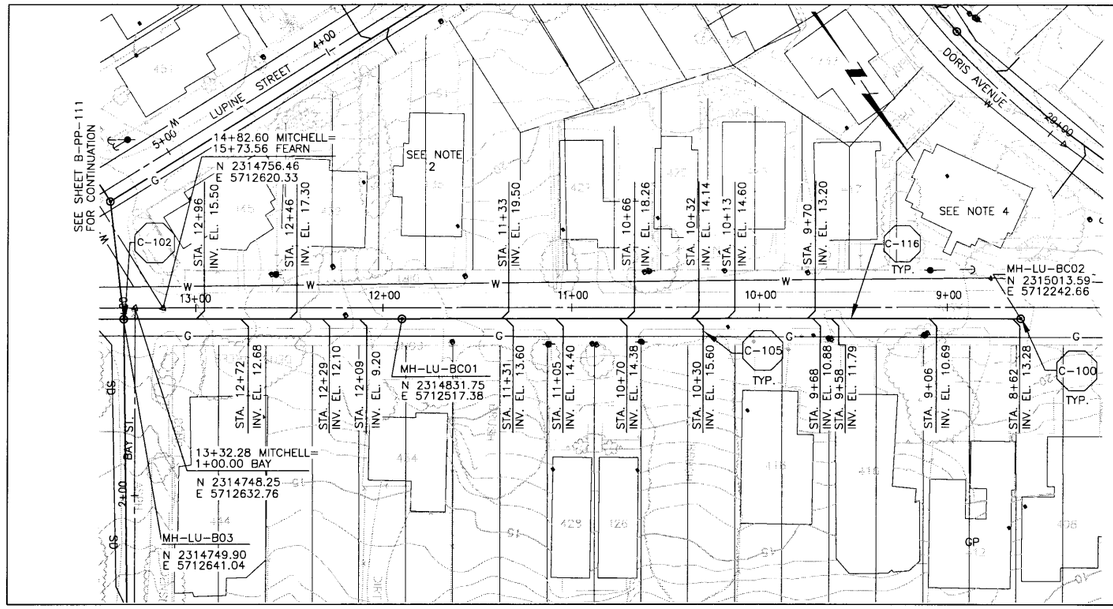

PLAN ON MITCHELL DRIVE

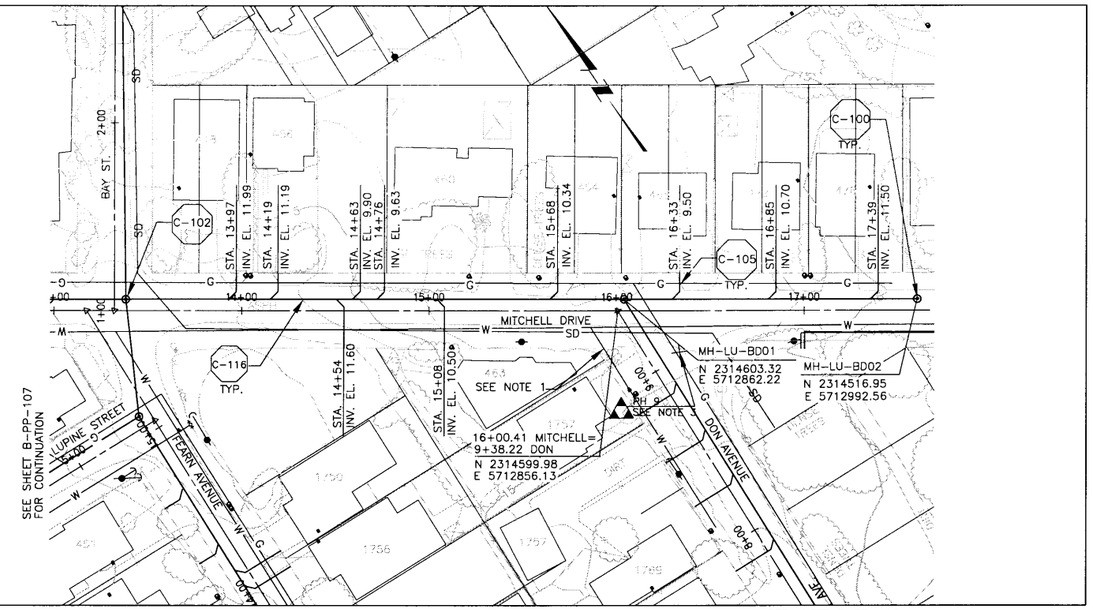

PLAN ON MITCHELL DRIVE

MATCH POINT MH-LU-B03

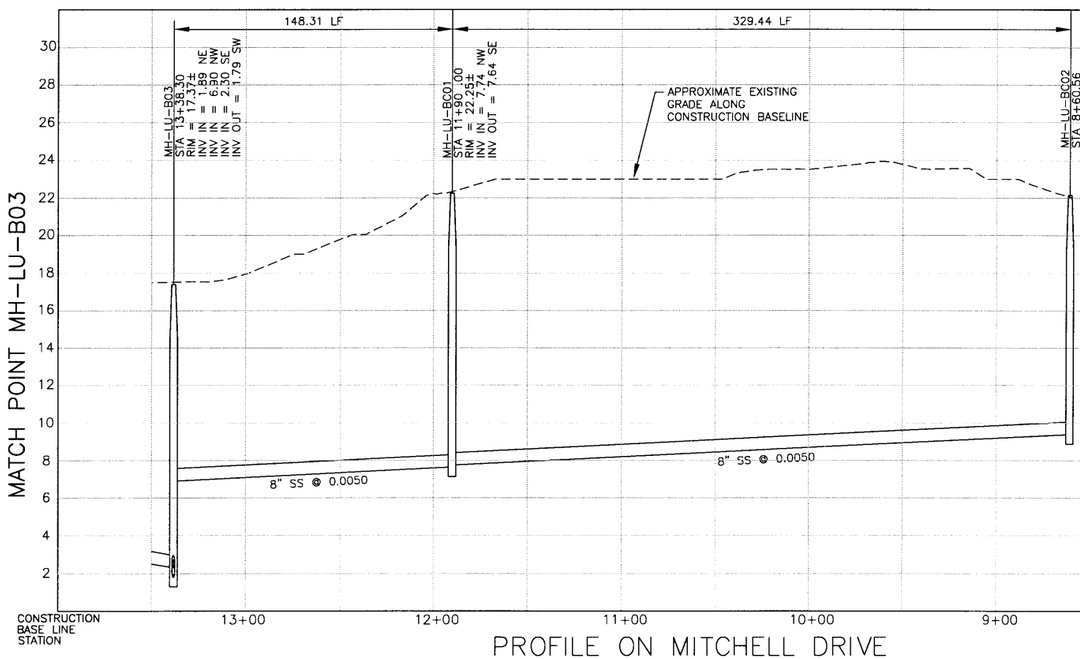

PROFILE ON MITCHELL DRIVE

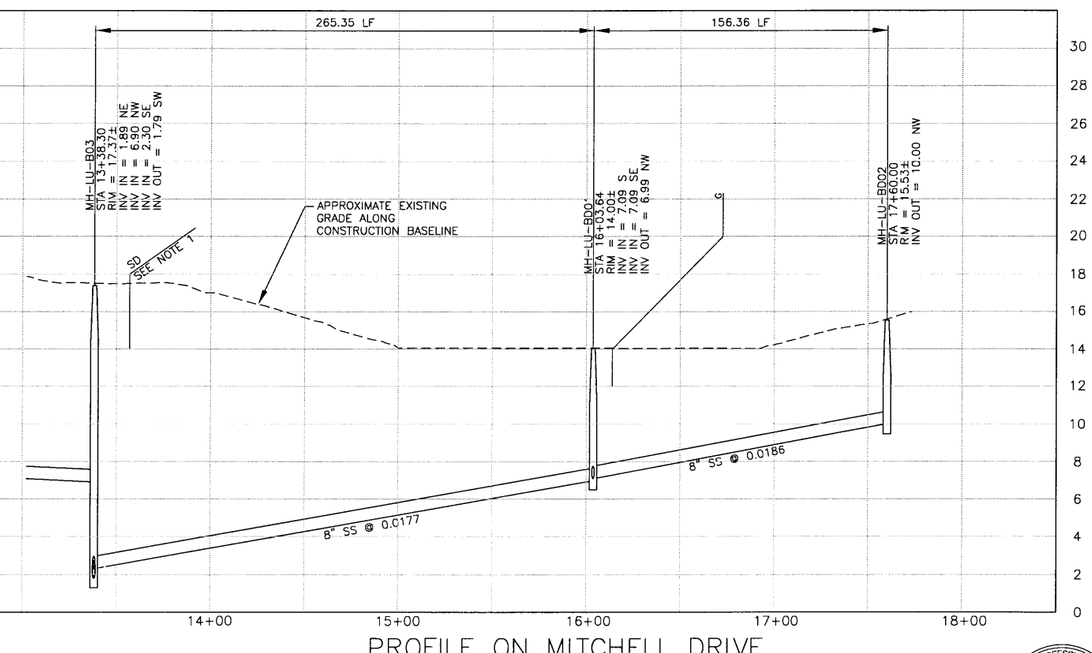

PROFILE ON MITCHELL DRIVE

NOTES:

1. BASED ON FIELD OBSERVATION STORM DRAIN IS ASSUMED TO BE FORCE MAIN FROM PUMP STATION @ MITCHELL & DON AVE
2. 435 MITCHELL DRIVE IS SERVED ON LUPINE ST.
3. STORM DRAIN 0" BELOW GROUND
4. 411 MITCHELL DRIVE SERVED ON DORIS AVE

DIGALERT
DIAL TOLL FREE 1-800-642-2444
AT LEAST TWO DAYS BEFORE YOU DIG
UNDERGROUND SERVICE ALERT OF NORTHERN CALIFORNIA

REGISTERED PROFESSIONAL ENGINEER KENNETH J. FARRIOR No. 40,657 Expires 3/07 STATE OF CALIFORNIA

REV	DATE	BY	DESCRIPTION

SCALE: HORZ: 1"=40' VERT: 1"= 4'

WARNING: 0 1/2 1 — IF THIS BAR DOES NOT MEASURE 1" THEN DRAWING IS NOT TO SCALE

DESIGNED SH/GH
DRAWN KS/JM/AF/BF
CHECKED SH

SUBMITTED BY
JOHN A. BERGEN — C31069 — LICENSE NO. — 02/16/04 — DATE
STEVEN J. HYLAND — C23892 — LICENSE NO. — 02/16/04 — DATE

LOS OSOS COMMUNITY SERVICES DISTRICT

MWH Walnut Creek, California

eda design professionals — civil engineers • land surveyors • land planners — 1998 santa barbara st • san luis obispo, ca 93401 — ph: 805/549-8658 • email: eda@edainc.com

LOS OSOS WASTEWATER PROJECT
PLAN AND PROFILE
MITCHELL DRIVE
STA 8+60.56 TO STA 17+60.00

SHEET B-PP-112

JOB NO. 1481166

K:\2650000\bak\EDA-Work\PP-SHEETS - 100% Submittal\2 - Mitchell.dwg 2/05/04 08:54 AM shawnsg

MATCH POINT MH-LU-BD01

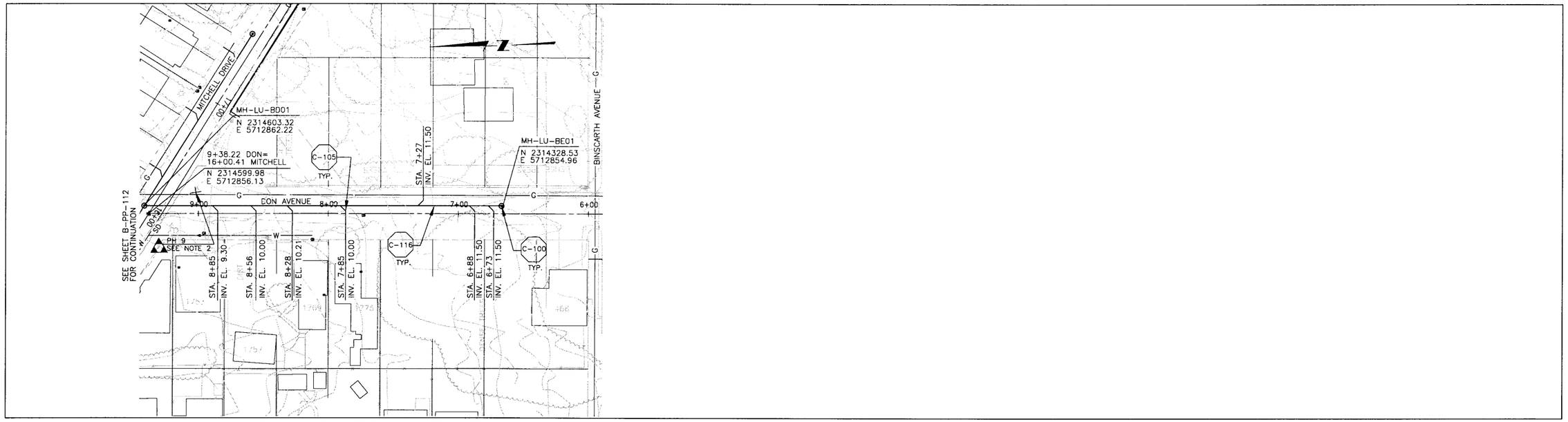

PLAN ON DON AVENUE

MATCH POINT MH-LU-BD01

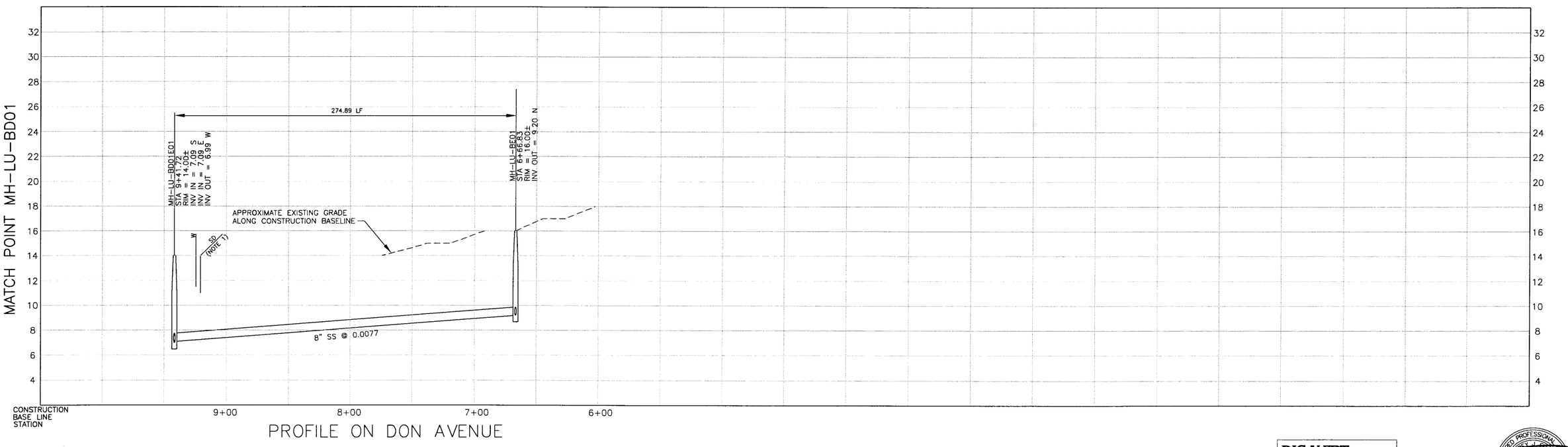

PROFILE ON DON AVENUE

NOTES:

1. BASED ON FIELD OBSERVATION STORM DRAIN IS ASSUMED TO BE FORCE MAIN FROM PUMP STATION @ MITCHELL & DON AVE
2. STORM DRAIN APPEARS TO EXIST IN THIS VICINITY. UNABLE TO LOCATE BY POTHOLING. CONTRACTOR SHALL CONFIRM THAT THE S.D. DOES NOT CONFLICT WITH THE SEWER PRIOR TO CONSTRUCTION.
3.

DIGALERT
DIAL TOLL FREE
1-800-642-2444
AT LEAST TWO DAYS BEFORE YOU DIG
UNDERGROUND SERVICE ALERT OF NORTHERN CALIFORNIA

REGISTERED PROFESSIONAL ENGINEER JOHN A. BERGEN No. 40,657 Expires 3/07 CIVIL STATE OF CALIFORNIA

REV	DATE	BY	DESCRIPTION

SCALE
HORZ: 1"=40'
VERT: 1"= 4'

WARNING
0 1/2 1
IF THIS BAR DOES NOT MEASURE 1" THEN DRAWING IS NOT TO SCALE

DESIGNED SH/GH
DRAWN KS/JM/AF/BF
CHECKED SH

SUBMITTED BY
JOHN A. BERGEN — C31069 LICENSE NO. — 02/16/04 DATE
STEVE J. HYLAND — C23892 LICENSE NO. — 02/16/04 DATE

LOS OSOS COMMUNITY SERVICES DISTRICT

MWH Walnut Creek, California

eda design professionals
civil engineers • land surveyors • land planners
1998 santa barbara st. • san luis obispo, ca 93401
ph: 805/549-8658 • email: eda@edainc.com

LOS OSOS WASTEWATER PROJECT
PLAN AND PROFILE
DON AVENUE
STA 6+66.83 TO STA 9+41.72

SHEET
B-PP-113

K:\2265000\base\DA-Work\PP-SHEETS - 100% Submittal\13 - Don.dwg 2/05/04 08:55 AM shawnog JOB NO. 1481166

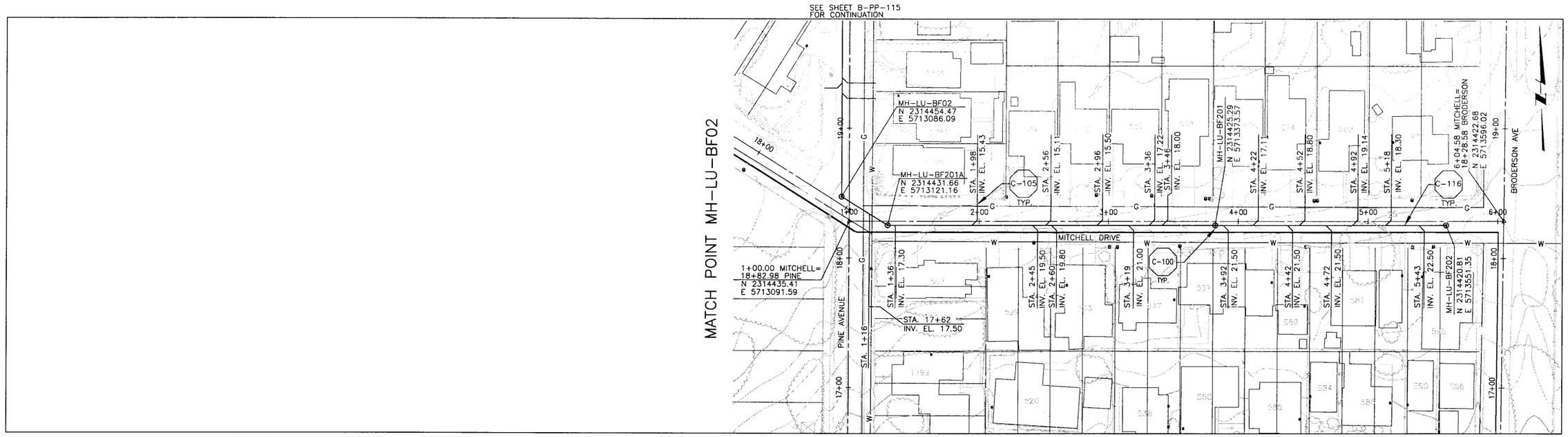

PLAN ON MITCHELL DRIVE

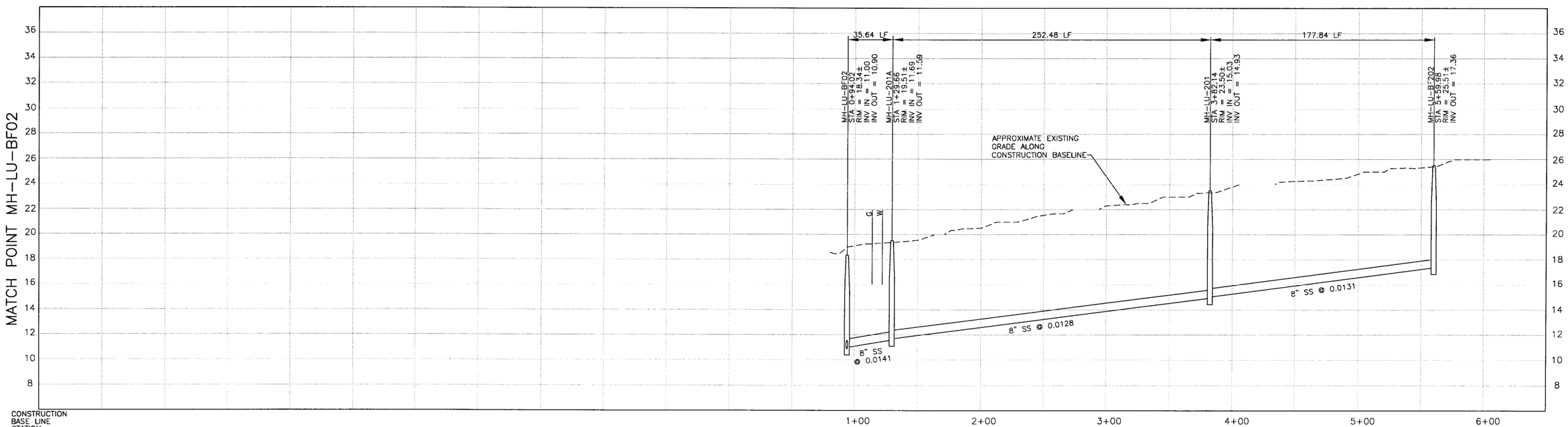

PROFILE ON MITCHELL DRIVE

NOTES:

1.
2.
3.

DIGALERT
DIAL TOLL FREE
1-800-642-2444
AT LEAST TWO DAYS BEFORE YOU DIG
UNDERGROUND SERVICE ALERT OF NORTHERN CALIFORNIA

REGISTERED PROFESSIONAL ENGINEER
JEFFREY J. EMPLOYEE
C.E. No. 40,653
Expires 3-31-07
STATE OF CALIFORNIA

REV	DATE	BY	DESCRIPTION

SCALE: HORZ: 1"=40' VERT: 1"= 4'

WARNING: 0 1/2 1 — IF THIS BAR DOES NOT MEASURE 1" THEN DRAWING IS NOT TO SCALE

DESIGNED SH/GH
DRAWN KS/JM/AF/BF
CHECKED SH

SUBMITTED BY
JOHN A. BERGEN — C31069 — LICENSE NO. — 02/16/04 — DATE
STEVE J. HYLAND — C23892 — LICENSE NO. — 02/16/04 — DATE

LOS OSOS COMMUNITY SERVICES DISTRICT

MWH Walnut Creek, California

eda design professionals
civil engineers • land surveyors • land planners
1998 santa barbara st • san luis obispo, ca 93401
ph: 805549-8658 • email: eda@edainc.com

LOS OSOS WASTEWATER PROJECT
PLAN AND PROFILE
MITCHELL DRIVE
STA 0+94.02 TO STA 5+59.98

SHEET B-PP-114

K:\2265000\00\bpel\EDA-Work\PP-SHEETS - 100% Submittal\14 - Mitchell.dwg 2/05/04 08:56 AM shawnbg JOB NO. 1481166

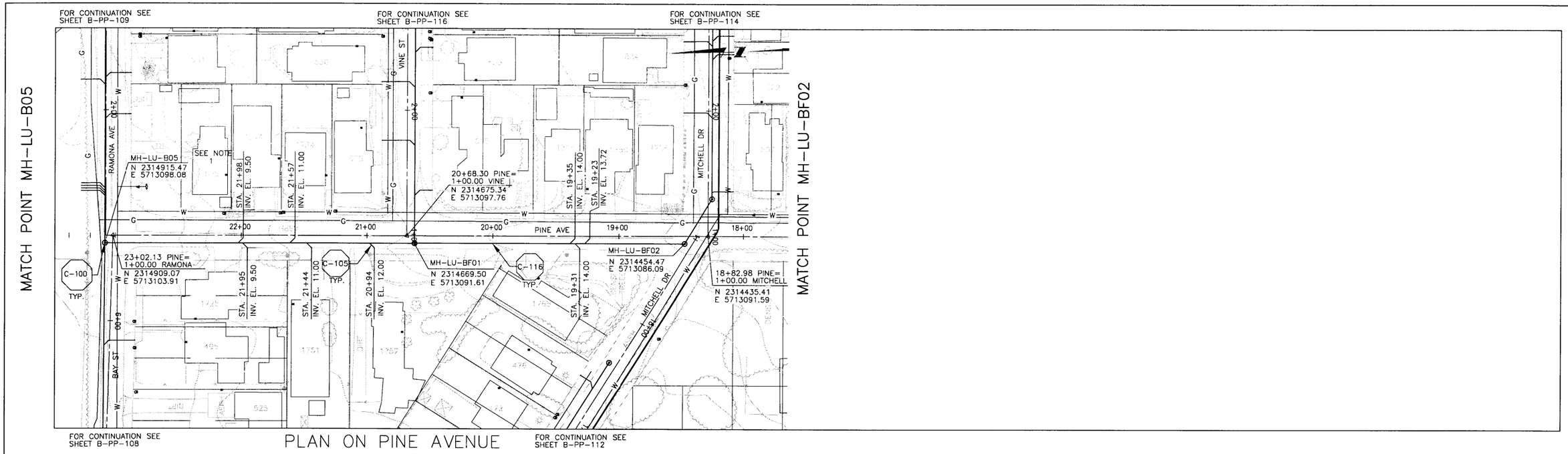

PLAN ON PINE AVENUE

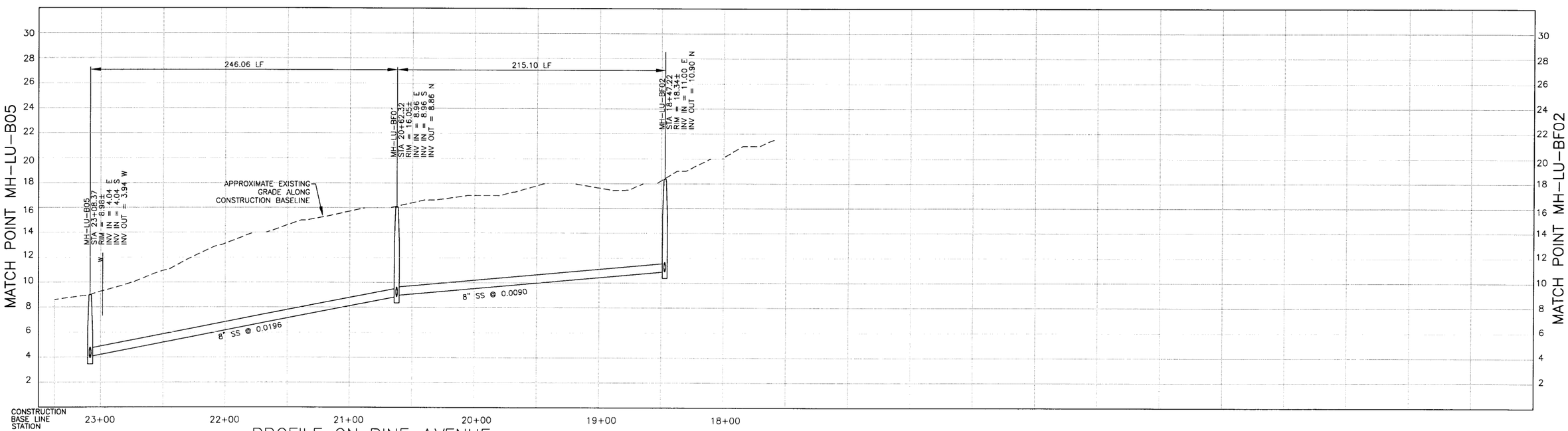

PROFILE ON PINE AVENUE

NOTES:

1. 525 PINE AVE SERVED ON RAMONA AVE
2.
3.

DIGALERT
DIAL TOLL FREE
1-800-642-2444
AT LEAST TWO DAYS BEFORE YOU DIG
UNDERGROUND SERVICE ALERT OF NORTHERN CALIFORNIA

REGISTERED PROFESSIONAL ENGINEER JEFFREY J. ENRICO Lic. No. 40,653 Expires 3/07 CIVIL STATE OF CALIFORNIA

REV	DATE	BY	DESCRIPTION

SCALE: HORZ: 1"=40' VERT: 1"= 4'

WARNING: 0 1/2 1 — IF THIS BAR DOES NOT MEASURE 1" THEN DRAWING IS NOT TO SCALE

DESIGNED SH/GH
DRAWN KS/JM/AF/BF
CHECKED SH

SUBMITTED BY
JOHN A. BERGEN — C31069 — LICENSE NO. — 02/16/04 — DATE
STEVE J. HYLAND — C23892 — LICENSE NO. — 02/16/04 — DATE

LOS OSOS COMMUNITY SERVICES DISTRICT

MWH Walnut Creek, California

eda design professionals — civil engineers • land surveyors • land planners — 1998 santa barbara st • san luis obispo, ca 93401 — ph: 805/549-8656 • email: eda@edainc.com

LOS OSOS WASTEWATER PROJECT
PLAN AND PROFILE
PINE AVENUE
STA 18+47.22 TO STA 23+08.37

SHEET B-PP-115

K:\2850000\acad\EDA-Work\PP-SHEETS - 100% Submittal\15 - Pine.dwg 2/05/04 08:57 AM ahoning JOB NO. 1481166

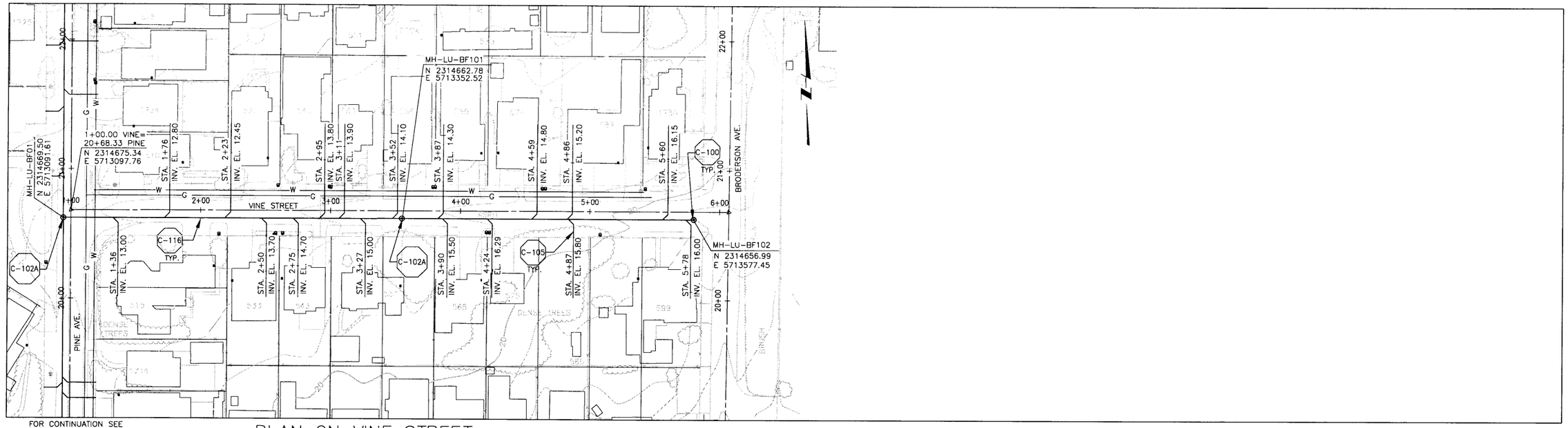

PLAN ON VINE STREET

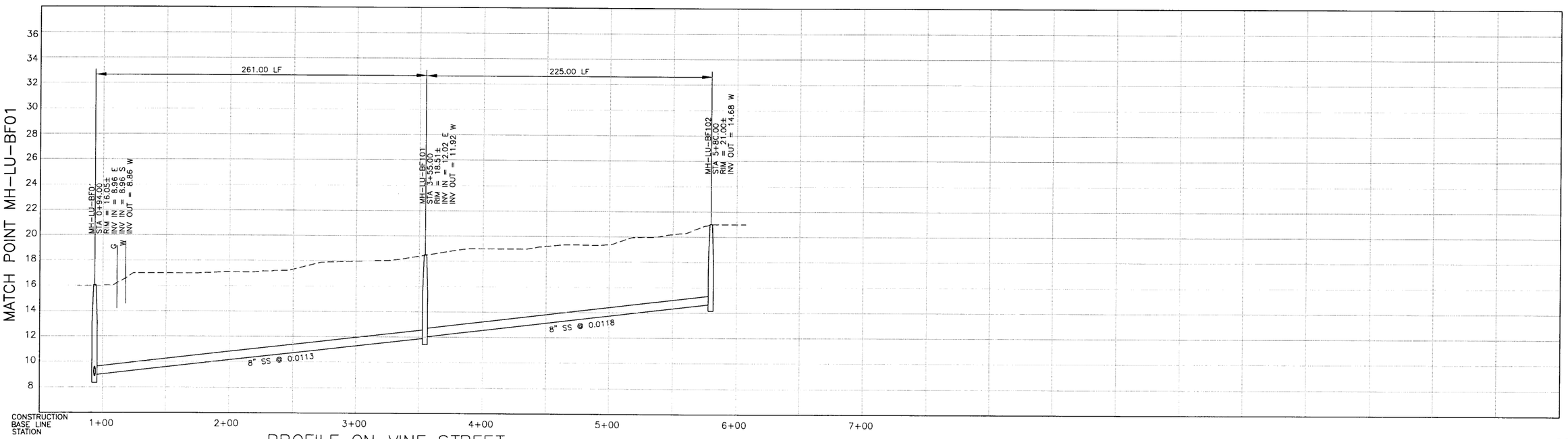

PROFILE ON VINE STREET

NOTES:

1.
2.
3.

DIGALERT
DIAL TOLL FREE
1-800-642-2444
AT LEAST TWO DAYS BEFORE YOU DIG
UNDERGROUND SERVICE ALERT OF NORTHERN CALIFORNIA

REGISTERED PROFESSIONAL ENGINEER
JEFFREY J. EMRICK
Lic. No. 40,657
Expires 3/07
STATE OF CALIFORNIA

REV	DATE	BY	DESCRIPTION

SCALE
HORZ: 1"=40'
VERT: 1"= 4'

WARNING
0 1/2 1
IF THIS BAR DOES NOT MEASURE 1" THEN DRAWING IS NOT TO SCALE

DESIGNED SH/GH
DRAWN KS/JM/AF/BF
CHECKED SH

SUBMITTED BY
JOHN A. BERGEN — C31069 LICENSE NO. — 02/16/04 DATE
STEVE J. HYLAND — C23892 LICENSE NO. — 02/16/04 DATE

LOS OSOS COMMUNITY SERVICES DISTRICT

MWH Walnut Creek, California

eda design professionals
civil engineers • land surveyors • land planners
1998 santa barbara st • san luis obispo, ca 93401
ph: 805/549-8658 • email: eda@edainc.com

LOS OSOS WASTEWATER PROJECT
PLAN AND PROFILE
VINE STREET
STA 0+94.00 TO STA 5+80.00

SHEET
B-PP-116

JOB NO. 1481166
K:\22650000\base\EDA-Work\PP-SHEETS - 100% Submittal\16 - Vine.dwg 2/05/04 08:58 AM shawnag

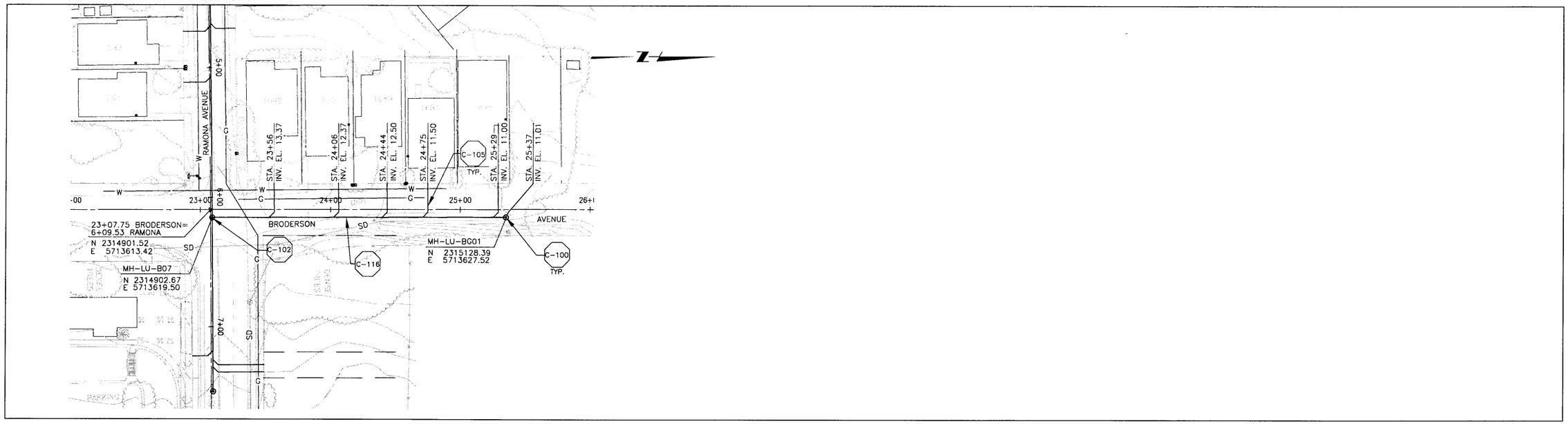

PLAN ON BRODERSON AVENUE

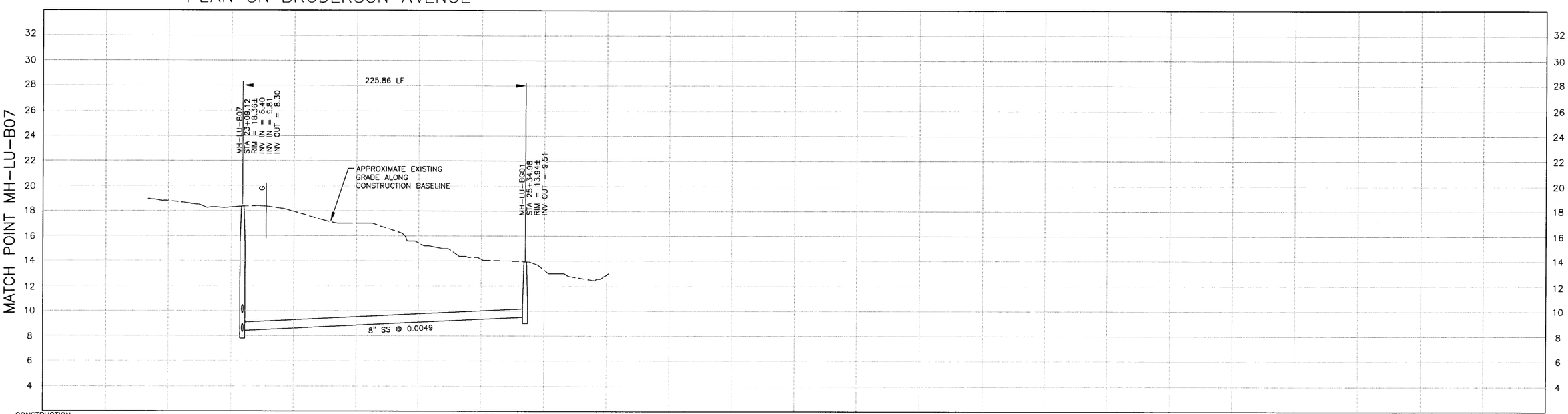

PROFILE ON BRODERSON AVENUE

NOTES:

1.
2.
3.

DIGALERT
DIAL TOLL FREE
1-800-642-2444
AT LEAST TWO DAYS
BEFORE YOU DIG
UNDERGROUND SERVICE ALERT OF NORTHERN CALIFORNIA

REGISTERED PROFESSIONAL ENGINEER
JEFFREY J. EMRICK
Lic. No. 40,657
Expires 3/07
CIVIL
STATE OF CALIFORNIA

REV	DATE	BY	DESCRIPTION

SCALE
HORZ: 1"=40'
VERT: 1"= 4'

WARNING
0 1/2 1
IF THIS BAR DOES NOT MEASURE 1" THEN DRAWING IS NOT TO SCALE

DESIGNED SH/GH
DRAWN KS/JM/AF/BF
CHECKED SH

SUBMITTED BY
JOHN A. BERGEN — C31069 LICENSE NO. — 02/16/04 DATE
STEVE J. HYLAND — C23892 LICENSE NO. — 02/16/04 DATE

LOS OSOS
COMMUNITY SERVICES DISTRICT

MWH
Walnut Creek, California

eda design professionals
civil engineers • land surveyors • land planners
1998 santa barbara st • san luis obispo, ca 93401
ph: 805/549-8658 • email: eda@edainc.com

LOS OSOS WASTEWATER PROJECT
PLAN AND PROFILE
BRODERSON AVE.
STA 23+09.12 TO STA 25+34.98

SHEET
B-PP-117

JOB NO. 1481166
K:\22650000\base\EDA-Work\PP-SHEETS - 100% Submittal\17 - Broderson.dwg 2/05/04 08:59 AM shawnag

MATCH POINT MH-LU-A02 - SEE SHEET B-PP-102
FOR CONTINUATION

FOR CONTINUATION SEE
SHEET B-PP-119

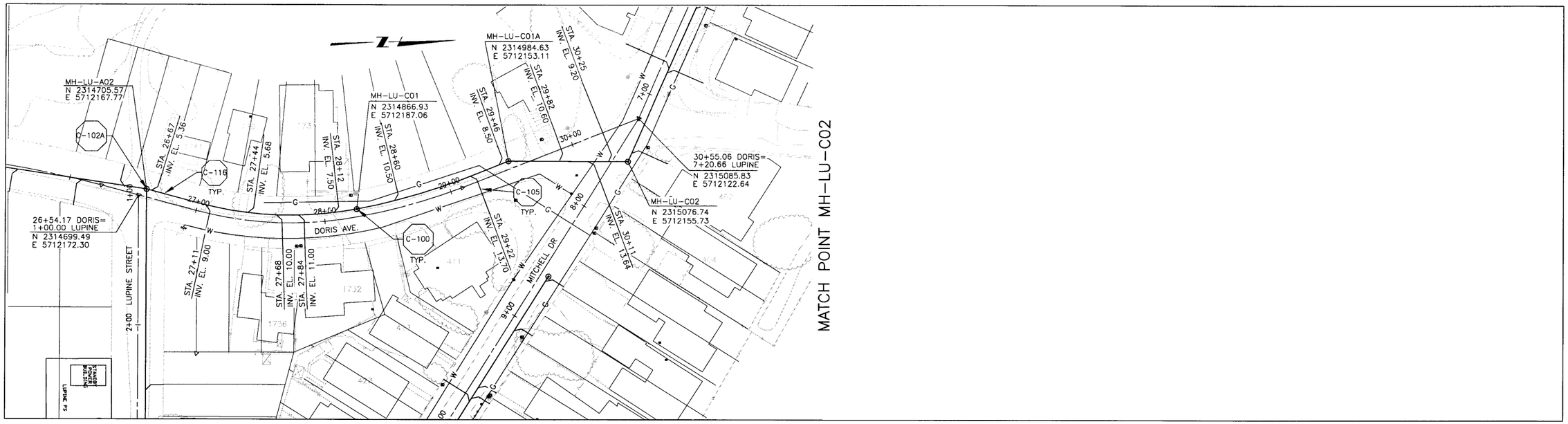

MATCH POINT MH-LU-C02

FOR CONTINUATION SEE
SHEET B-PP-101

FOR CONTINUATION SEE
SHEET B-PP-112

PLAN ON DORIS AVENUE

MATCH POINT MH-LU-A02 - SEE SHEET B-PP-102
FOR CONTINUATION

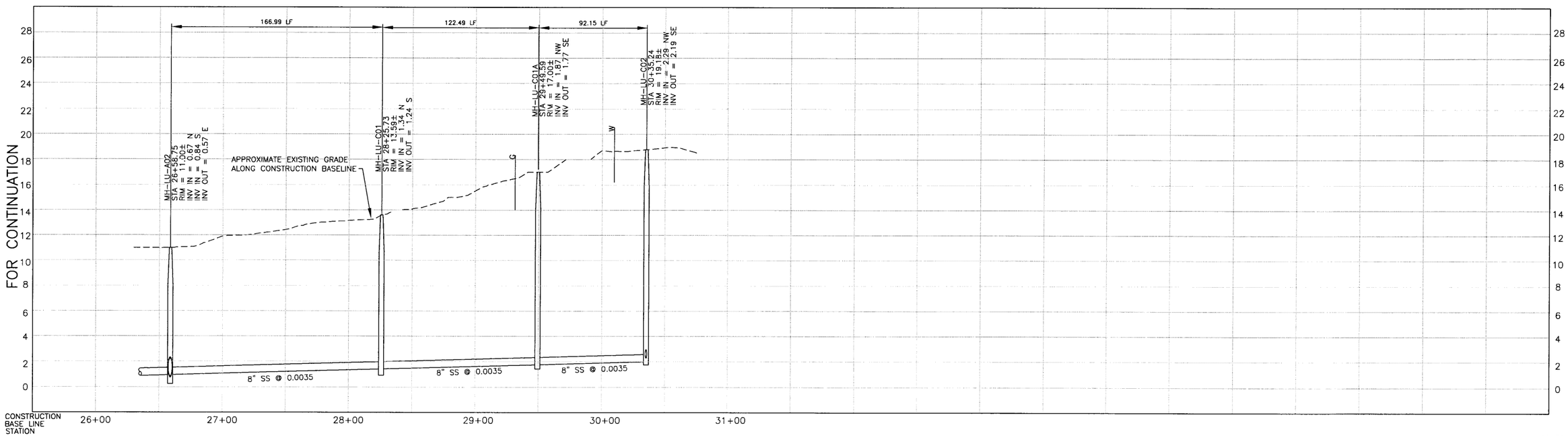

MATCH POINT MH-LU-C02

PROFILE ON DORIS AVENUE

NOTES:

1.
2.
3.

DIGALERT
DIAL TOLL FREE
1-800-642-2444
AT LEAST TWO DAYS
BEFORE YOU DIG
UNDERGROUND SERVICE ALERT OF NORTHERN CALIFORNIA

REGISTERED PROFESSIONAL ENGINEER
JEFFREY J. EMIGH
No. 40,651
Expires 3/07
STATE OF CALIFORNIA
CIVIL

REV	DATE	BY	DESCRIPTION

SCALE
HORZ: 1"=40'
VERT: 1"= 4'

WARNING
0 1/2 1
IF THIS BAR DOES NOT MEASURE 1" THEN DRAWING IS NOT TO SCALE

DESIGNED SH/GH
DRAWN KS/JM/AF/BF
CHECKED SH

SUBMITTED BY
JOHN A. BERGEN — C31069 LICENSE NO. — 02/16/04 DATE
STEVE J. HYLAND — C23892 LICENSE NO. — 02/16/04 DATE

LOS OSOS
COMMUNITY SERVICES DISTRICT

MWH
Walnut Creek, California

eda design professionals
civil engineers • land surveyors • land planners
1998 santa barbara st • san luis obispo, ca 93401
ph: 805/549-8658 • email: eda@edainc.com

LOS OSOS WASTEWATER PROJECT
PLAN AND PROFILE
DORIS AVENUE
STA 26+58.75 TO STA 30+35.24

SHEET
B-PP-118

K:\22550000\base\EDA-Work\PP-SHEETS - 100% Submittal\18 - Doris.dwg 2/05/04 09:00 AM shawng JOB NO. 1481166

MATCH POINT MH-LU-C02

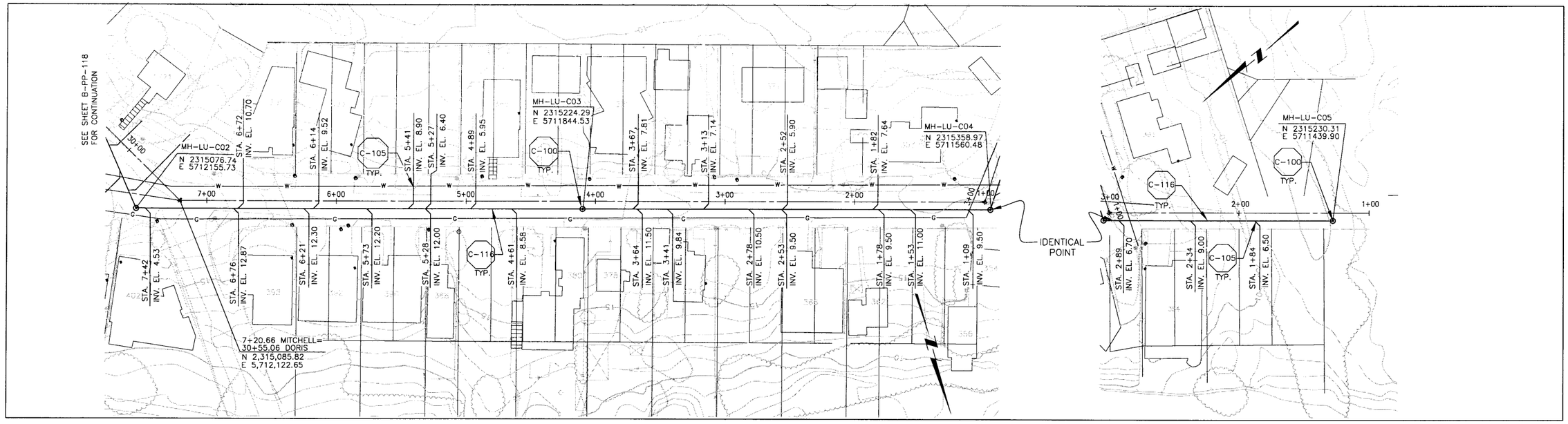

PLAN ON MITCHELL DRIVE

PLAN ON W. MITCHELL DRIVE

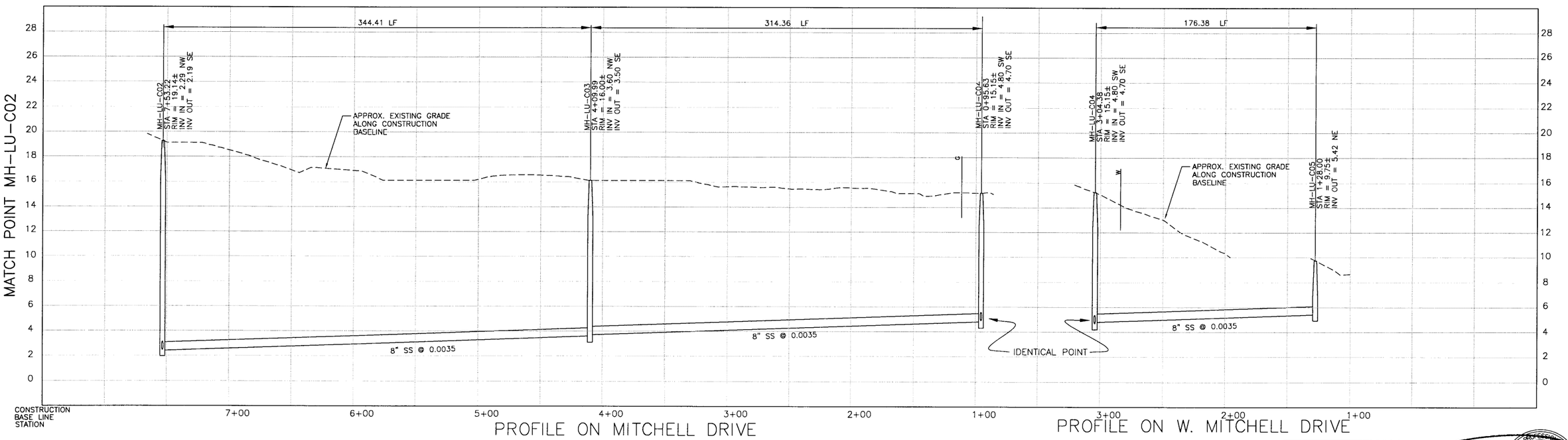

PROFILE ON MITCHELL DRIVE

PROFILE ON W. MITCHELL DRIVE

NOTES:

1.
2.
3.

DIGALERT
DIAL TOLL FREE
1-800-642-2444
AT LEAST TWO DAYS BEFORE YOU DIG
UNDERGROUND SERVICE ALERT OF NORTHERN CALIFORNIA

REGISTERED PROFESSIONAL ENGINEER JEFFREY J. EMRICK Lic. No. 40,657 Expires 3/07 CIVIL STATE OF CALIFORNIA

REV	DATE	BY	DESCRIPTION

SCALE
HORZ: 1"=40'
VERT: 1"= 4'

WARNING
0 1/2 1
IF THIS BAR DOES NOT MEASURE 1" THEN DRAWING IS NOT TO SCALE

DESIGNED SH/GH
DRAWN KS/JM/PM/BF
CHECKED SH

SUBMITTED BY
JOHN A. BERGEN — C31069 — LICENSE NO. — 02/16/04 — DATE
STEVE J. HYLAND — C23892 — LICENSE NO. — 02/16/04 — DATE

LOS OSOS COMMUNITY SERVICES DISTRICT

MWH Walnut Creek, California

eda design professionals
civil engineers • land surveyors • land planners
1998 santa barbara st • san luis obispo, ca 93401
ph: 805/549-8658 • email: eda@edainc.com

LOS OSOS WASTEWATER PROJECT
PLAN AND PROFILE
MITCHELL DRIVE 0+95.63 TO 7+53.22
WEST MITCHELL 1+28.00 TO 3+04.38

SHEET
B-PP-119

K:\2650000\base\EDA-Work\PP-SHEETS - 100% Submittal\19 - Mitchell.dwg 2/05/04 09:01 AM shownag

JOB NO. 1481166

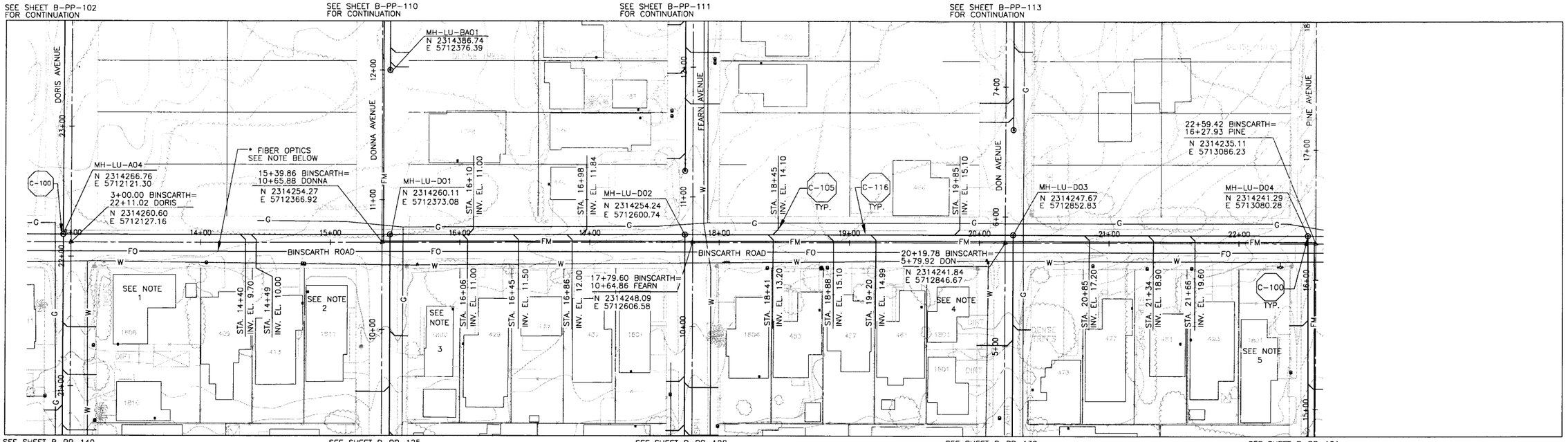

PLAN ON BINSCARTH ROAD

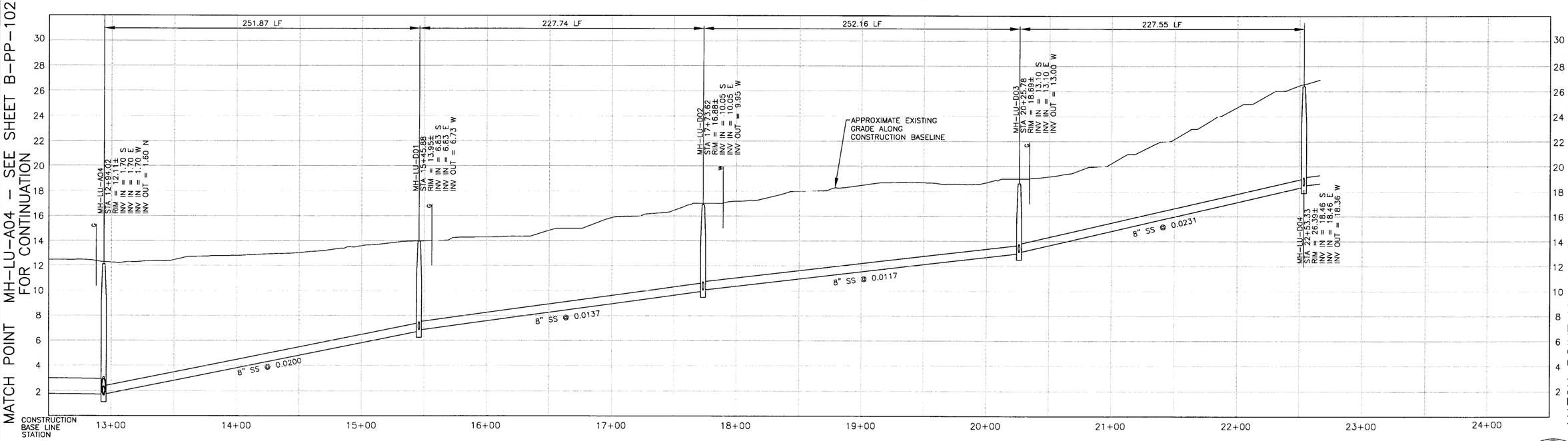

PROFILE ON BINSCARTH ROAD

NOTES:

1. 1806 BINSCARTH RD SERVED ON DORIS AVE
2. 1811 BINSCARTH RD SERVED ON DONNA AVE
3. 1800 BINSCARTH RD SERVED ON DONNA AVE
4. 1801 DON AVE SERVED ON DON AVE
5. 1801 PINE AVE SERVED ON PINE AVE

*NOTE:

ACTUAL LOCATION OF FIBER OPTICS FACILITIES OWNED BY CHARTER COMM. IS UNKNOWN. HORIZONTAL AND VERTICAL LOCATION SHALL BE VERIFIED BY THE CONTRACTOR PRIOR TO CONSTRUCTION.

DIGALERT
DIAL TOLL FREE
1-800-642-2444
AT LEAST TWO DAYS BEFORE YOU DIG
UNDERGROUND SERVICE ALERT OF NORTHERN CALIFORNIA

REGISTERED PROFESSIONAL ENGINEER
JOHN A. BERGEN
No. 40,657
Expires 3/07
STATE OF CALIFORNIA

REV	DATE	BY	DESCRIPTION

SCALE
HORZ: 1"=40'
VERT: 1"= 4'

WARNING
0 1/2 1
IF THIS BAR DOES NOT MEASURE 1" THEN DRAWING IS NOT TO SCALE

DESIGNED SH/GH
DRAWN KS/JM/AF/BF
CHECKED SH

SUBMITTED BY
JOHN A. BERGEN — C31069 LICENSE NO. — 02/16/04 DATE
STEVEN J. HYLAND — C23892 LICENSE NO. — 02/16/04 DATE

LOS OSOS COMMUNITY SERVICES DISTRICT

MWH Walnut Creek, California

eda design professionals
civil engineers • land surveyors • land planners
1998 santa barbara st • san luis obispo, ca 93401
ph: 805/542-9658 • email: eda@edainc.com

LOS OSOS WASTEWATER PROJECT
PLAN AND PROFILE
BINSCARTH ROAD
STA 12+94.02 TO STA 22+53.33

SHEET
B-PP-120

K:\2650000\base\EDA_Work\PP-SHEETS - 100% Submittal\20 - Binscarth.dwg 2/05/04 09:02 AM shawnag JOB NO. 1481166

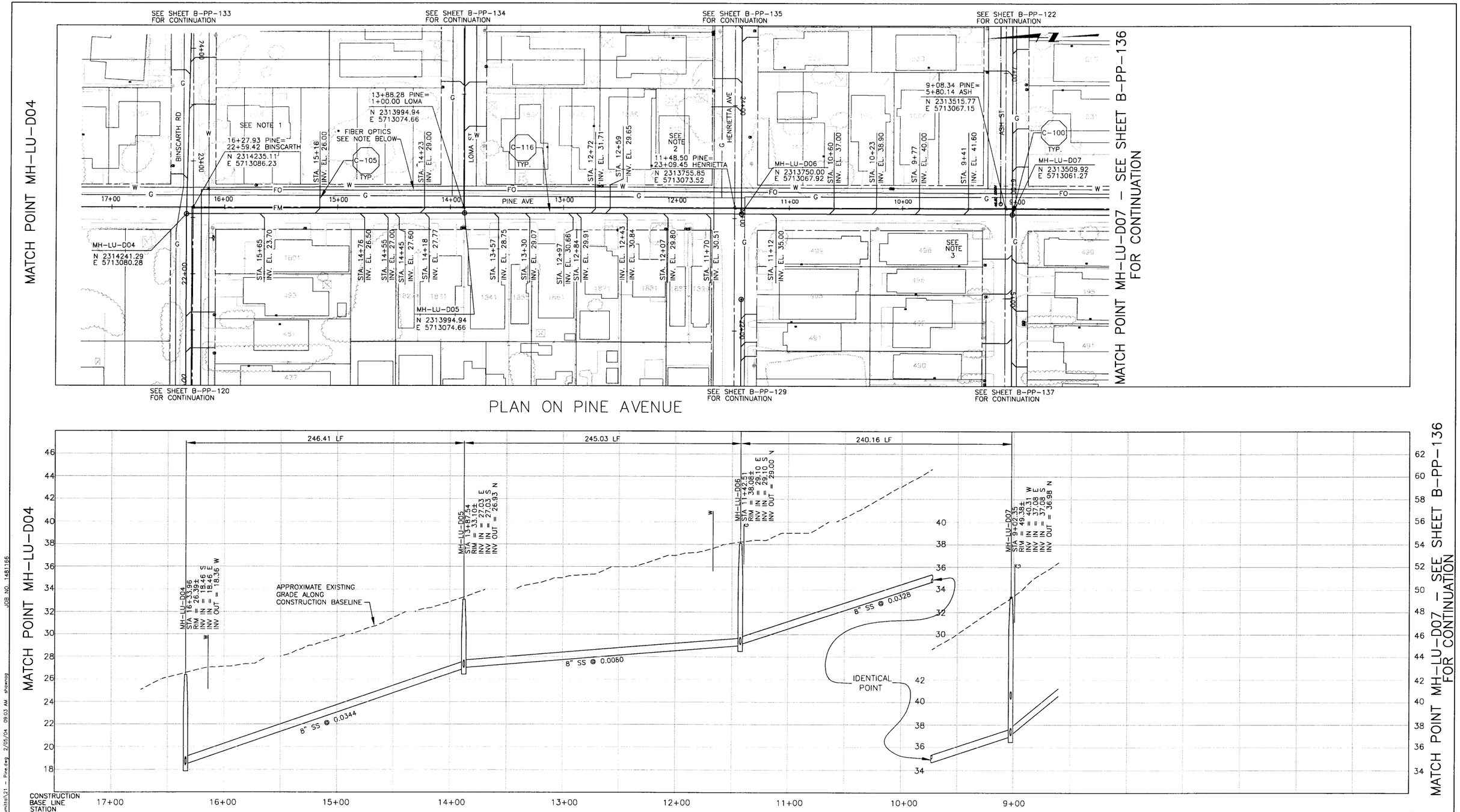

PLAN ON PINE AVENUE

PROFILE ON PINE AVENUE

NOTES:

1. 1800 PINE AVE SERVED ON BINSCARTH RD
2. 510 PINE AVE SERVED ON HENRIETTA AVE
3. 498 PINE AVE SERVED ON ASH ST.

*NOTE:

ACTUAL LOCATION OF FIBER OPTICS FACILITIES OWNED BY CHARTER COMM. IS UNKNOWN. HORIZONTAL AND VERTICAL LOCATION SHALL BE VERIFIED BY THE CONTRACTOR PRIOR TO CONSTRUCTION.

DIGALERT
DIAL TOLL FREE 1-800-642-2444
AT LEAST TWO DAYS BEFORE YOU DIG
UNDERGROUND SERVICE ALERT OF NORTHERN CALIFORNIA

REGISTERED PROFESSIONAL ENGINEER JEFFREY J. EMMICK No. 40,657 Expires 3/07 CIVIL STATE OF CALIFORNIA

JOB NO. 1481166

REV	DATE	BY	DESCRIPTION

SCALE: HORZ: 1"=40' VERT: 1"= 4'

WARNING: 0 1/2 1 — IF THIS BAR DOES NOT MEASURE 1" THEN DRAWING IS NOT TO SCALE

DESIGNED SH/GH
DRAWN KS/JM/AF/BF
CHECKED SH

SUBMITTED BY
JOHN A. BERGEN — C31069 — LICENSE NO. — 02/16/04 — DATE
STEVEN J. HYLAND — C23892 — LICENSE NO. — 02/16/04 — DATE

LOS OSOS COMMUNITY SERVICES DISTRICT

MWH Walnut Creek, California

eda design professionals — civil engineers • land surveyors • land planners — 1998 santa barbara st • san luis obispo, ca 93401 — ph: 805/549-8658 • email: eda@edainc.com

LOS OSOS WASTEWATER PROJECT
PLAN AND PROFILE
PINE AVENUE
STA 9+02.35 TO STA 16+33.96

SHEET B-PP-121

K:\2765000\base\EDA-Work\PP-SHEETS - 100% Submittal\21 - Pine.dwg 2/05/04 09:03 AM shawnag

MATCH POINT MH-LU-D07 – SEE SHEET B-PP-137 FOR CONTINUATION

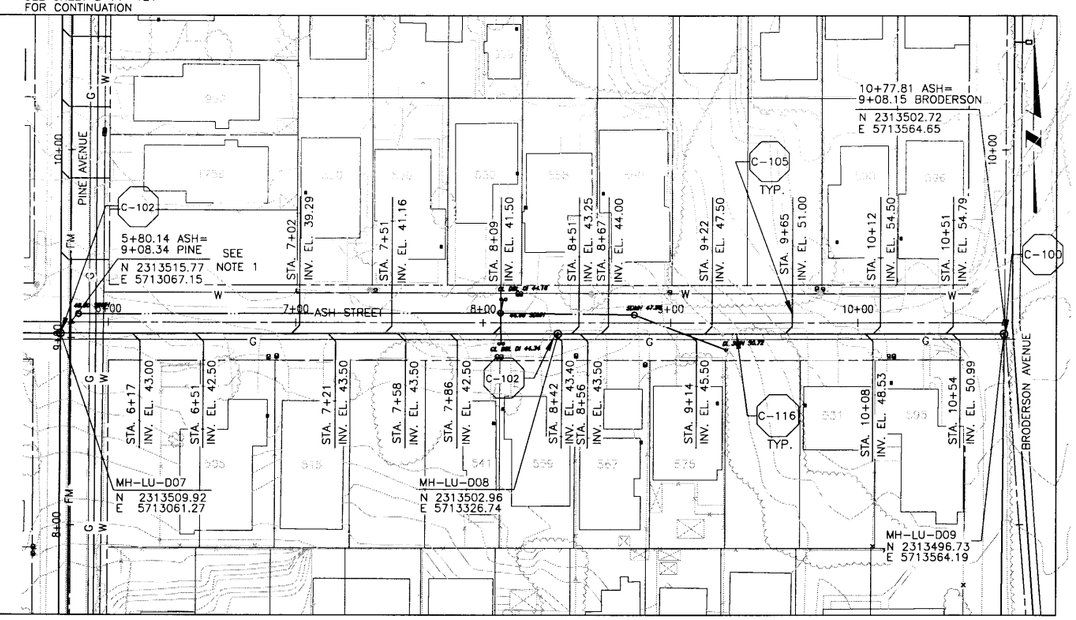

PLAN ON ASH STREET

MATCH POINT MH-LU-D09

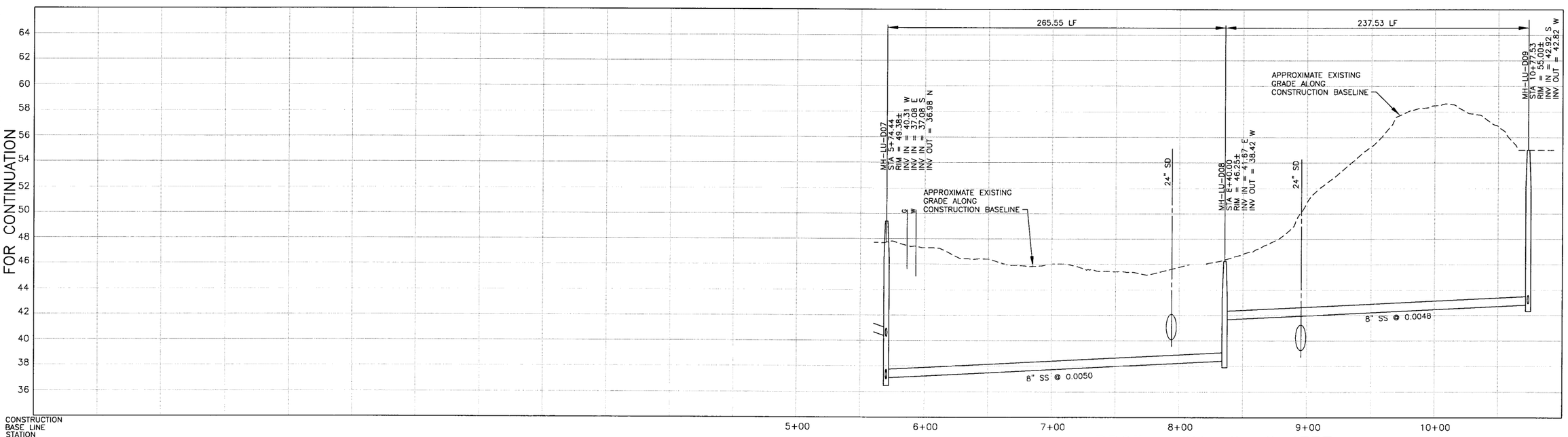

PROFILE ON ASH STREET

MATCH POINT MH-LU-D09

MATCH POINT MH-LU-D07 – SEE SHEET B-PP-137 FOR CONTINUATION

JOB NO. 1481166

K:\2365000\Base\EDA-Work\PP-SHEETS - 100% Submittal\22 - Ash.dwg 2/05/04 09:04 AM shawnsg

NOTES:

1. LOT SERVED ON PINE AVE
2.
3.

DIGALERT — DIAL TOLL FREE 1-800-642-2444 AT LEAST TWO DAYS BEFORE YOU DIG — UNDERGROUND SERVICE ALERT OF NORTHERN CALIFORNIA

REGISTERED PROFESSIONAL ENGINEER — STEVEN J. HYLAND — LIC. No. 40,657 — Expires 3/07 — CIVIL — STATE OF CALIFORNIA

REV	DATE	BY	DESCRIPTION

SCALE: HORZ: 1"=40' VERT: 1"= 4'

WARNING: 0 1/2 1 — IF THIS BAR DOES NOT MEASURE 1" THEN DRAWING IS NOT TO SCALE

DESIGNED SH/GH
DRAWN KS/JM/AF/BF
CHECKED SH

SUBMITTED BY
JOHN A. BERGEN — C31069 — LICENSE NO. — 02/16/04 — DATE
STEVE J. HYLAND — C23892 — LICENSE NO. — 02/16/04 — DATE

LOS OSOS COMMUNITY SERVICES DISTRICT

MWH Walnut Creek, California

eda design professionals — civil engineers • land surveyors • land planners — 1998 santa barbara st • san luis obispo, ca 93401 — ph: 805/549-8658 • email: eda@edainc.com

LOS OSOS WASTEWATER PROJECT
PLAN AND PROFILE
ASH STREET
STA 5+74.44 TO STA 10+77.53

SHEET B-PP-122

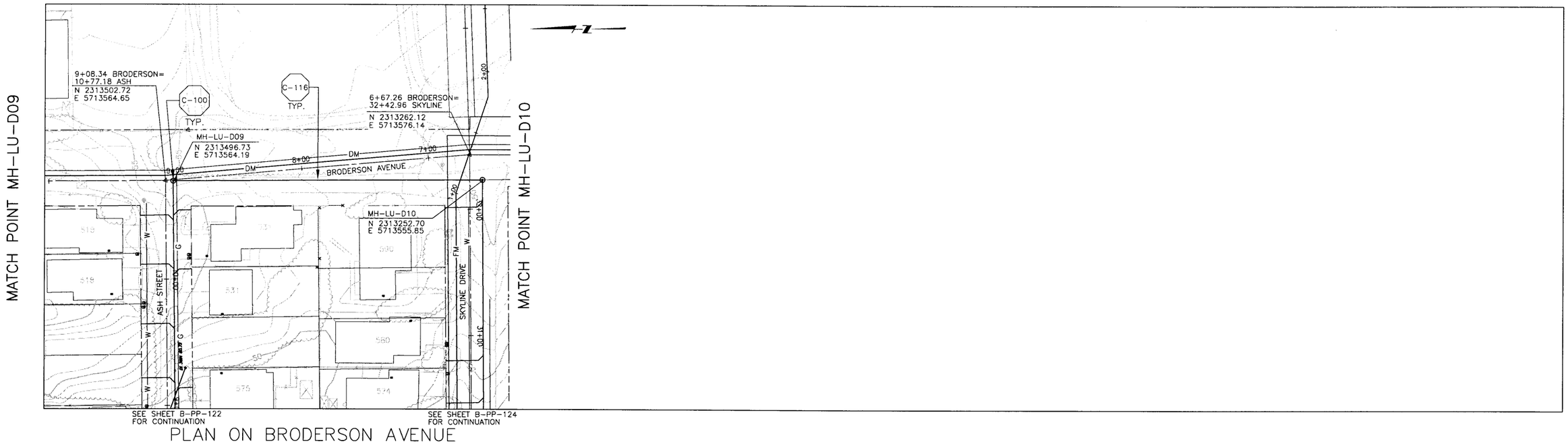

PLAN ON BRODERSON AVENUE

PROFILE ON BRODERSON AVENUE

NOTES:

1.
2.
3.

DIGALERT
DIAL TOLL FREE
1-800-642-2444
AT LEAST TWO DAYS
BEFORE YOU DIG
UNDERGROUND SERVICE ALERT OF NORTHERN CALIFORNIA

REGISTERED PROFESSIONAL ENGINEER
JEFFREY J. EMRICK
No. 40,657
Expires 3/07
STATE OF CALIFORNIA

REV	DATE	BY	DESCRIPTION

SCALE
HORZ: 1"=40'
VERT: 1"= 4'

WARNING
0 1/2 1
IF THIS BAR DOES NOT MEASURE 1" THEN DRAWING IS NOT TO SCALE

DESIGNED SH/GH
DRAWN KS/JM/AF/BF
CHECKED SH

SUBMITTED BY
JOHN A. BERGEN — C31069 LICENSE NO. — 02/16/04 DATE
STEVE J. HYLAND — C23892 LICENSE NO. — 02/16/04 DATE

LOS OSOS
COMMUNITY SERVICES DISTRICT

MWH
Walnut Creek, California

eda design professionals
civil engineers • land surveyors • land planners
1998 santa barbara st • san luis obispo, ca 93401
ph: 805/549-8658 • email: eda@edainc.com

LOS OSOS WASTEWATER PROJECT
PLAN AND PROFILE
BRODERSON AVE.
STA 6+57.03 TO STA 9+02.14

SHEET
B-PP-123

K:\22650000\base\EDA-Work\PP-SHEETS - 100% Submittal\23 - Broderson.dwg 2/05/04 09:04 AM shawnag JOB NO. 1481166

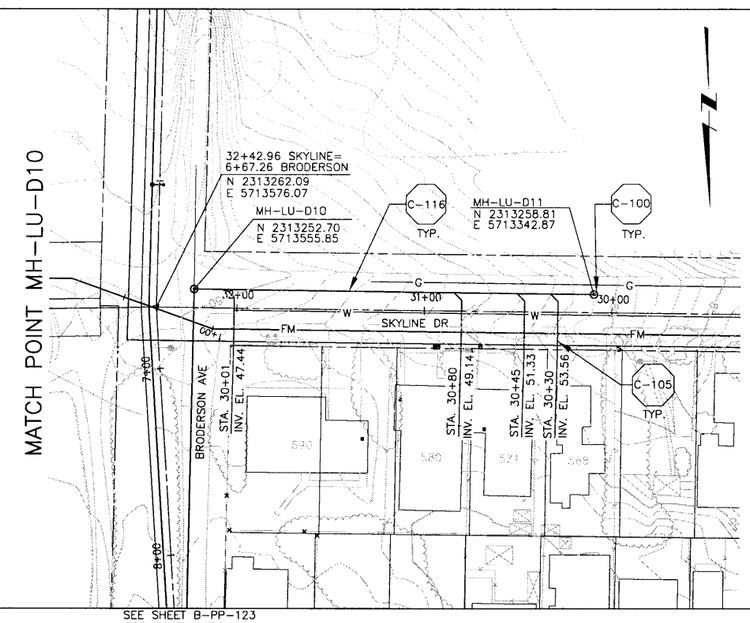

PLAN ON SKYLINE DRIVE

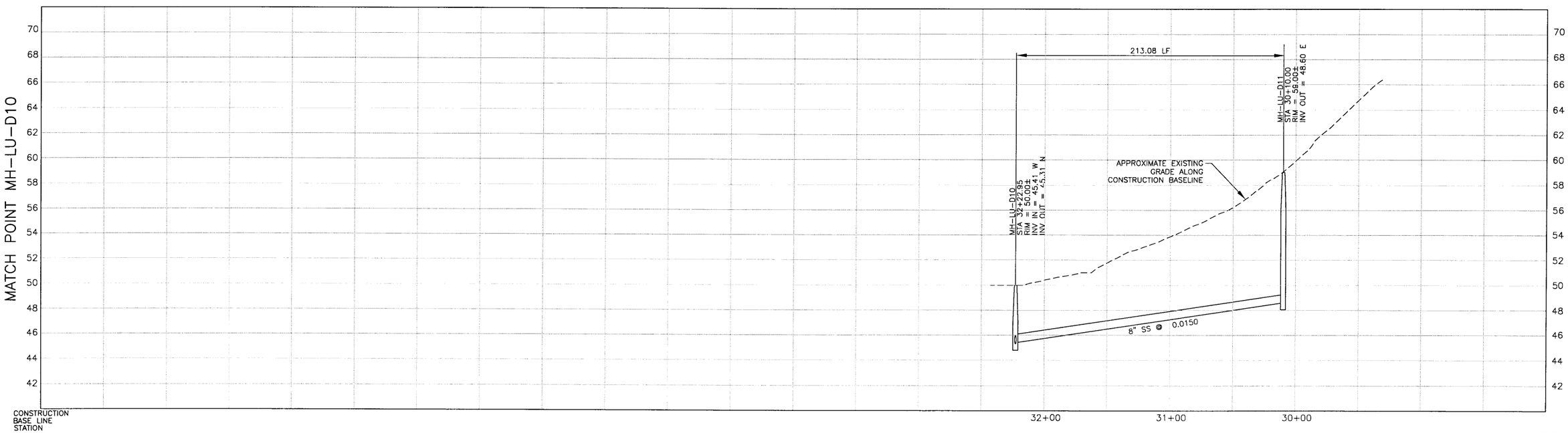

PROFILE ON SKYLINE DRIVE

NOTES:

1.
2.
3.

DIGALERT
DIAL TOLL FREE
1-800-642-2444
AT LEAST TWO DAYS
BEFORE YOU DIG
UNDERGROUND SERVICE ALERT OF NORTHERN CALIFORNIA

REGISTERED PROFESSIONAL ENGINEER
JEFFREY J. EMMOR
No. 40,657
Expires 3/07
STATE OF CALIFORNIA

REV	DATE	BY	DESCRIPTION

SCALE
HORZ: 1"=40'
VERT: 1"= 4'

WARNING
0 1/2 1
IF THIS BAR DOES NOT MEASURE 1" THEN DRAWING IS NOT TO SCALE

DESIGNED SH/GH
DRAWN KS/JM/AF/BF
CHECKED SH

SUBMITTED BY
JOHN A. BERGEN — C31069 — LICENSE NO. — 02/16/04 — DATE
STEVE J. HYLAND — C23892 — LICENSE NO. — 02/16/04 — DATE

LOS OSOS
COMMUNITY SERVICES DISTRICT

MWH
Walnut Creek, California

eda design professionals
civil engineers • land surveyors • land planners
1998 santa barbara st • san luis obispo, ca 93401
ph: 805/549-8658 • email: eda@edainc.com

LOS OSOS WASTEWATER PROJECT
PLAN AND PROFILE
SKYLINE DRIVE
STA 30+10.00 TO STA 32+22.95

SHEET
B-PP-124

A:\2265000\base\EDA-Work\PP-SHEETS - 100% Submittal\24 - Skyline.dwg 2/05/04 09:05 AM showcog JOB NO. 1481166

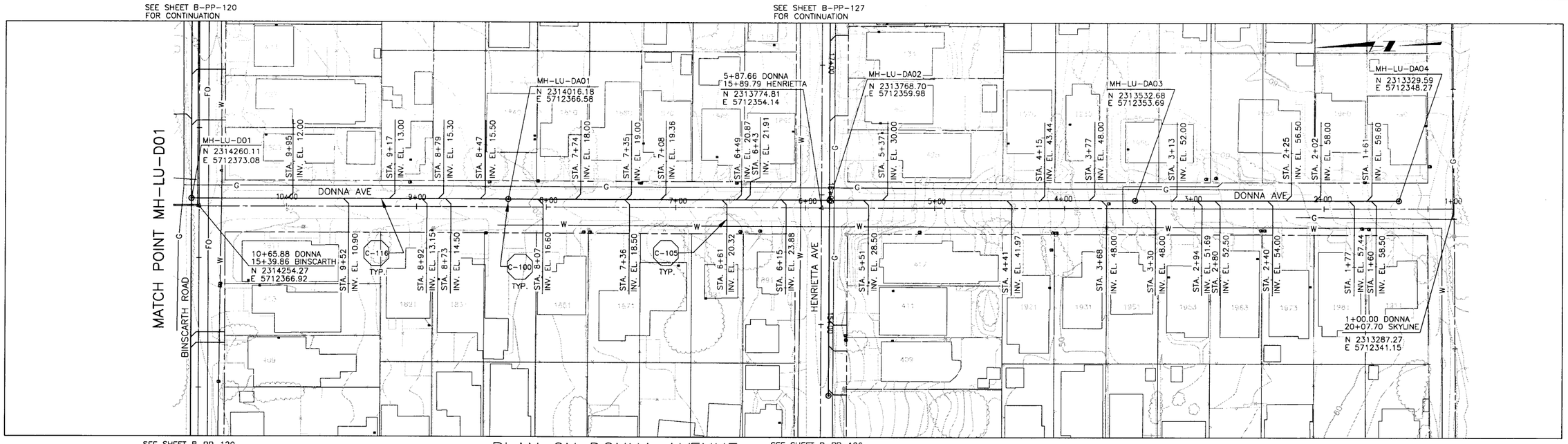

PLAN ON DONNA AVENUE

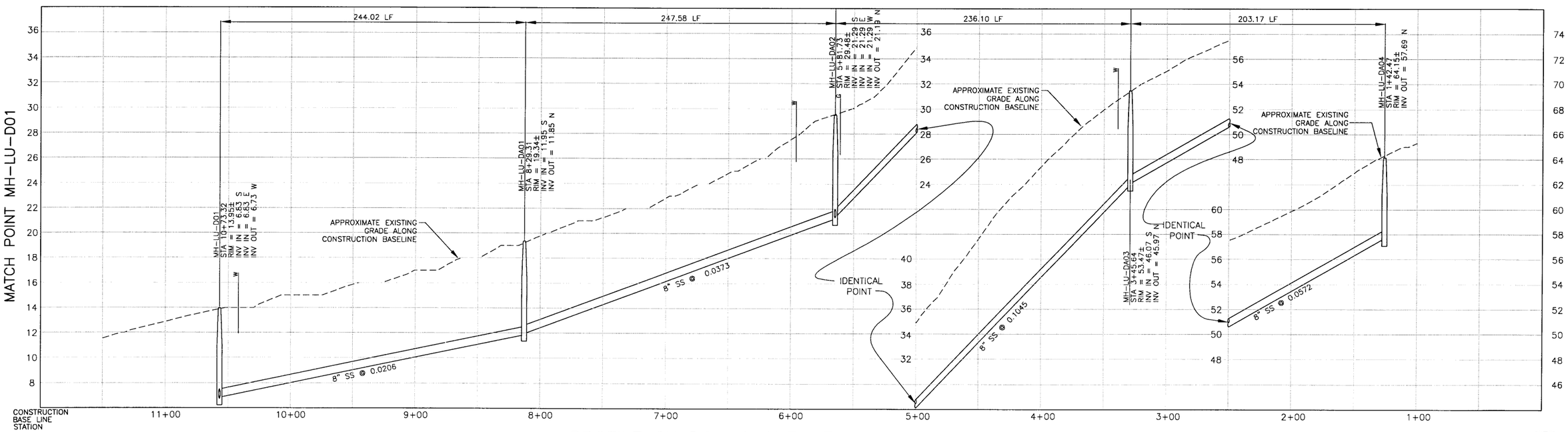

PROFILE ON DONNA AVENUE

NOTES:

1.
2.
3.

DIGALERT
DIAL TOLL FREE 1-800-642-2444
AT LEAST TWO DAYS BEFORE YOU DIG
UNDERGROUND SERVICE ALERT OF NORTHERN CALIFORNIA

REGISTERED PROFESSIONAL ENGINEER JEFFREY J. EMRICK No. 40,657 Expires 3/07 CALIFORNIA

REV	DATE	BY	DESCRIPTION

SCALE: HORZ: 1"=40' VERT: 1"= 4'

WARNING: 0 1/2 1 — IF THIS BAR DOES NOT MEASURE 1" THEN DRAWING IS NOT TO SCALE

DESIGNED SH/GH
DRAWN KS/JM/AF/BF
CHECKED SH

SUBMITTED BY
JOHN A. BERGEN — C31069 LICENSE NO. — 02/16/04 DATE
STEVE J. HYLAND — C23892 LICENSE NO. — 02/16/04 DATE

LOS OSOS COMMUNITY SERVICES DISTRICT

MWH Walnut Creek, California

eda design professionals — civil engineers • land surveyors • land planners — 1998 santa barbara st • san luis obispo, ca 93401 — ph: 805/549-8658 • email: eda@edainc.com

LOS OSOS WASTEWATER PROJECT
PLAN AND PROFILE
DONNA AVENUE
STA 1+42.47 TO STA 10+73.32

SHEET B-PP-125

K:\22650000\base\EDA-Work\PP-SHEETS - 100% Submittal\25 - Donna.dwg 2/05/04 09:06 AM shawnag JOB NO. 1481166

MATCH POINT MH-LU-DA02 – SEE SHEET B-PP-127 FOR CONTINUATION

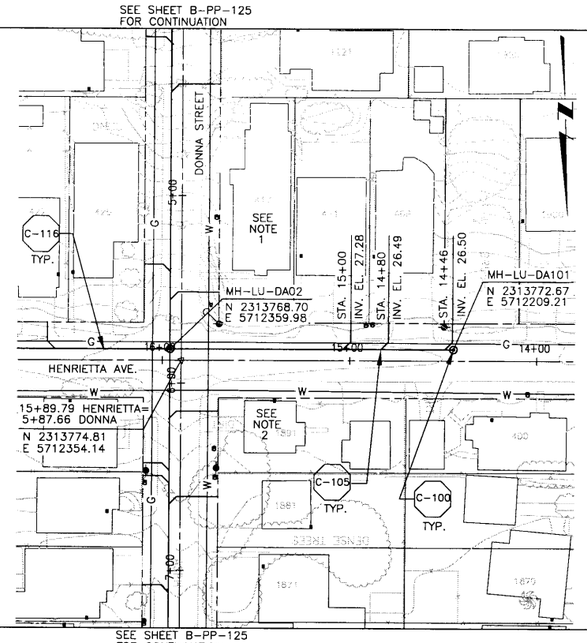

PLAN ON HENRIETTA AVENUE

MATCH POINT MH-LU-DA02 – SEE SHEET B-PP-127 FOR CONTINUATION

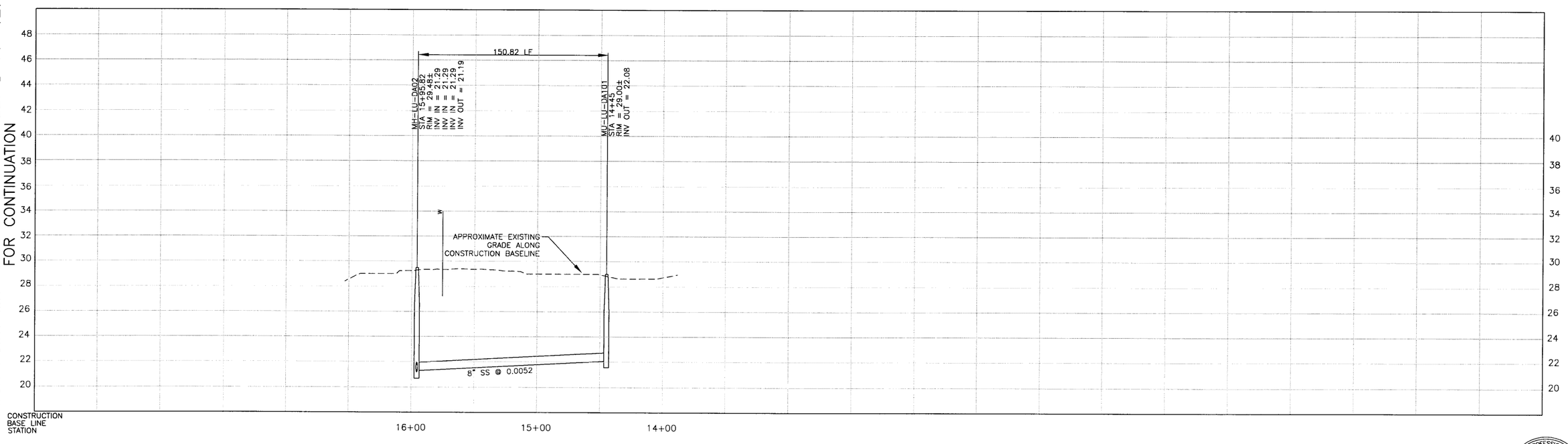

PROFILE ON HENRIETTA AVENUE

NOTES:

1. 417 HENRIETTA AVE SERVED ON DONNA ST.
2. 1891 HENRIETTA AVE SERVED ON DONNA ST.
3.

DIGALERT
DIAL TOLL FREE
1-800-642-2444
AT LEAST TWO DAYS BEFORE YOU DIG
UNDERGROUND SERVICE ALERT OF NORTHERN CALIFORNIA

REGISTERED PROFESSIONAL ENGINEER JEFFREY J. EMRICH No. 40,657 Expires 3/07 Civil CALIFORNIA

REV	DATE	BY	DESCRIPTION

SCALE
HORZ: 1"=40'
VERT: 1"= 4'

WARNING
0 1/2 1
IF THIS BAR DOES NOT MEASURE 1" THEN DRAWING IS NOT TO SCALE

DESIGNED SH/GH
DRAWN KS/JM/AF/BF
CHECKED SH

SUBMITTED BY
JOHN A. BERGEN — C31069 — LICENSE NO. — 02/16/04 — DATE
STEVEN J. HYLAND — C23892 — LICENSE NO. — 02/16/04 — DATE

LOS OSOS COMMUNITY SERVICES DISTRICT

MWH Walnut Creek, California

eda design professionals
civil engineers • land surveyors • land planners
1998 santa barbara st • san luis obispo, ca 93401
ph: 805/549-8658 • email: eda@edainc.com

LOS OSOS WASTEWATER PROJECT
PLAN AND PROFILE
HENRIETTA AVENUE
STA 14+45.00 TO STA 15+95.82

SHEET
B-PP-126

X:\2050001\base\CIA-Work\PP-SHEETS - 100% Submittal\B - Henrietta.dwg 2/05/04 09:07 AM shoenog JOB NO 1481165

MATCH POINT MH-LU-DA02-SEE SHEET B-PP-126
FOR CONTINUATION

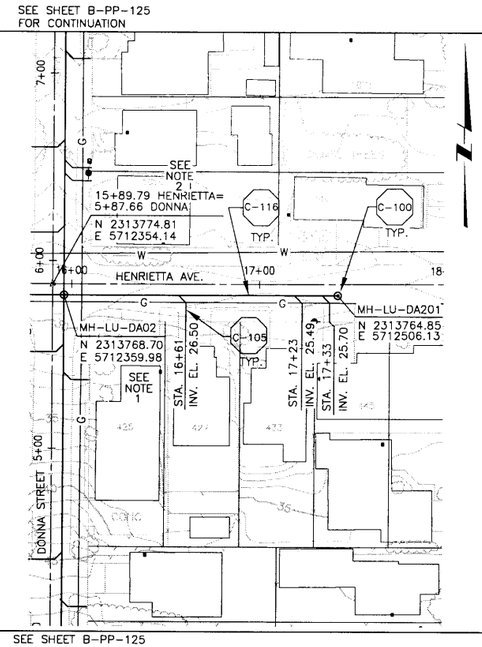

SEE SHEET B-PP-125
FOR CONTINUATION

PLAN ON HENRIETTA AVENUE

MATCH POINT MH-LU-DA02 - SEE SHEET B-PP-126
FOR CONTINUATION

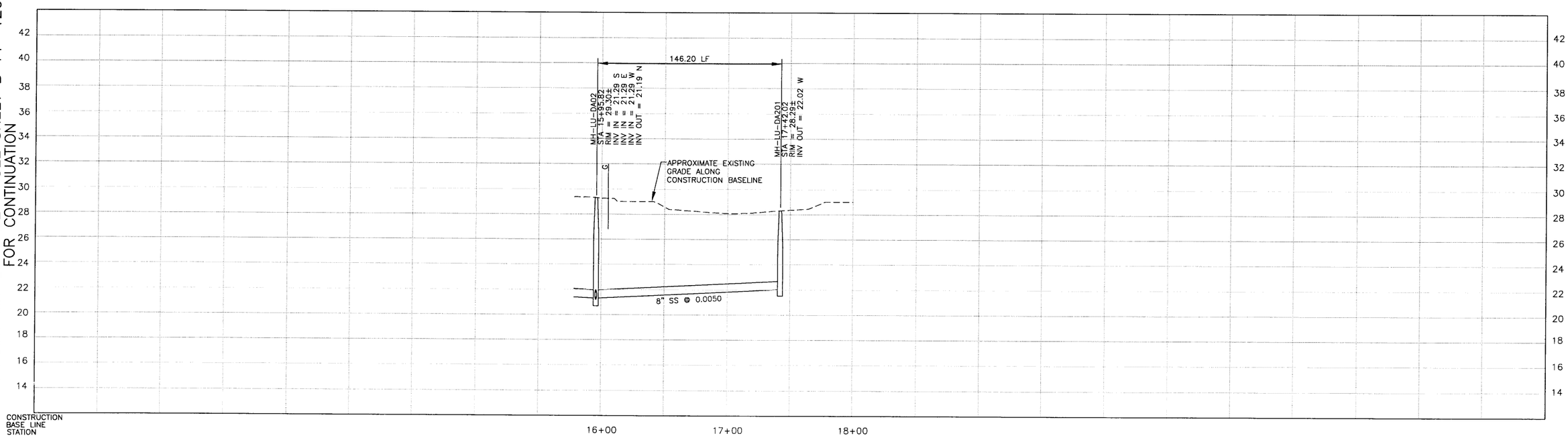

PROFILE ON HENRIETTA AVENUE

NOTES:

1. 425 HENRIETTA SERVED ON DONNA AVE
2. 1890 HENRIETTA AVE SERVED ON DONNA AVE
3.

DIGALERT
DIAL TOLL FREE
1-800-642-2444
AT LEAST TWO DAYS
BEFORE YOU DIG
UNDERGROUND SERVICE ALERT OF NORTHERN CALIFORNIA

REGISTERED PROFESSIONAL ENGINEER
JEFFREY J. EMROD
Lic. No. 40,657
Expires 3/07
CIVIL
STATE OF CALIFORNIA

REV	DATE	BY	DESCRIPTION

SCALE
HORZ: 1"=40'
VERT: 1"= 4'

WARNING
0 1/2 1
IF THIS BAR DOES NOT MEASURE 1" THEN DRAWING IS NOT TO SCALE

DESIGNED SH/GH
DRAWN KS/JM/AF/BF
CHECKED SH

SUBMITTED BY
JOHN A. BERGEN — C31069 — LICENSE NO. — 02/16/04 — DATE
STEVE J. HYLAND — C23892 — LICENSE NO. — 02/16/04 — DATE

LOS OSOS
COMMUNITY SERVICES DISTRICT

MWH
Walnut Creek, California

eda design professionals
civil engineers • land surveyors • land planners
1998 santa barbara st • san luis obispo, ca 93401
ph: 805/549-8658 • email: eda@edainc.com

LOS OSOS WASTEWATER PROJECT
PLAN AND PROFILE
HENRIETTA AVENUE
STA 15+95.82 TO STA 17+42.02

SHEET
B-PP-127

K:\22550000\base\EDA-Work\PP-SHEETS - 100% Submittal\27 - Henrietta.dwg 2/05/04 09:09 AM shawag JOB NO. 1481166

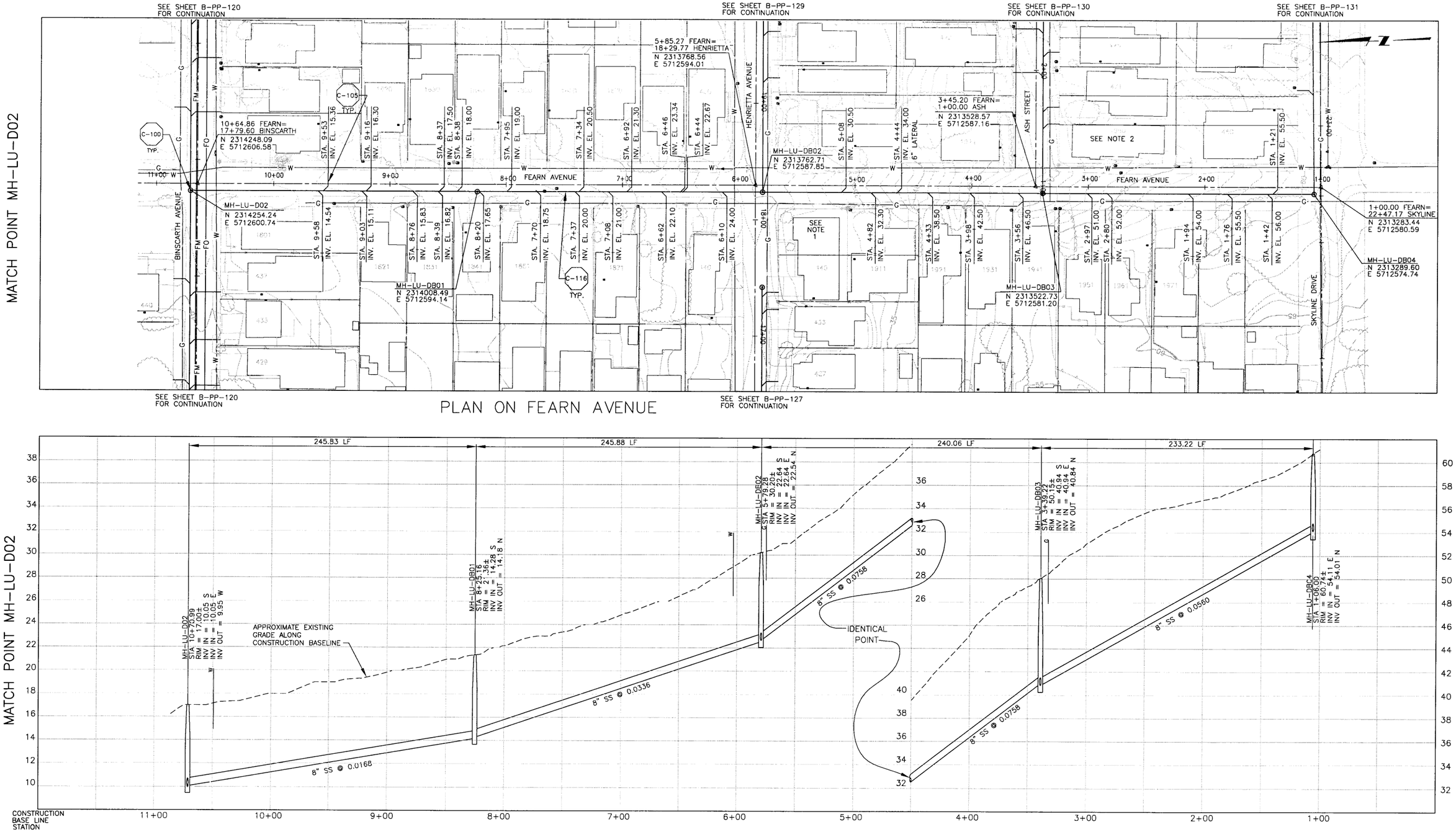

PLAN ON FEARN AVENUE

PROFILE ON FEARN AVENUE

NOTES:

1. 445 FEARN AVE SERVED ON HENRIETTA AVE
2. 1950 FEARN AVE SERVED ON ASH ST.
3.

DIGALERT
DIAL TOLL FREE 1-800-642-2444
AT LEAST TWO DAYS BEFORE YOU DIG
UNDERGROUND SERVICE ALERT OF NORTHERN CALIFORNIA

REGISTERED PROFESSIONAL ENGINEER JEFFREY J. EMRICK Lic. No. 40,657 Expires 3/07 CIVIL STATE OF CALIFORNIA

REV	DATE	BY	DESCRIPTION

SCALE: HORZ: 1"=40' VERT: 1"= 4'

WARNING: 0 1/2 1 IF THIS BAR DOES NOT MEASURE 1" THEN DRAWING IS NOT TO SCALE

DESIGNED SH/GH
DRAWN KS/JM/AF/BF
CHECKED SH

SUBMITTED BY
JOHN A. BERGEN — C31069 LICENSE NO. — 02/16/04 DATE
STEVE J. HYLAND — C23892 LICENSE NO. — 02/16/04 DATE

LOS OSOS COMMUNITY SERVICES DISTRICT

MWH Walnut Creek, California

eda design professionals — civil engineers • land surveyors • land planners — 1998 santa barbara st • san luis obispo, ca 93401 — ph: 805/549-8658 • email: eda@edainc.com

LOS OSOS WASTEWATER PROJECT
PLAN AND PROFILE
FEARN AVENUE
STA 1+06.00 TO STA 10+70.99

SHEET B-PP-128

K:\22650000\base\EDA-Work\PP-SHEETS - 100% Submittal\28 - Fearn.dwg 2/05/04 09:10 AM shawnag JOB NO. 1481166

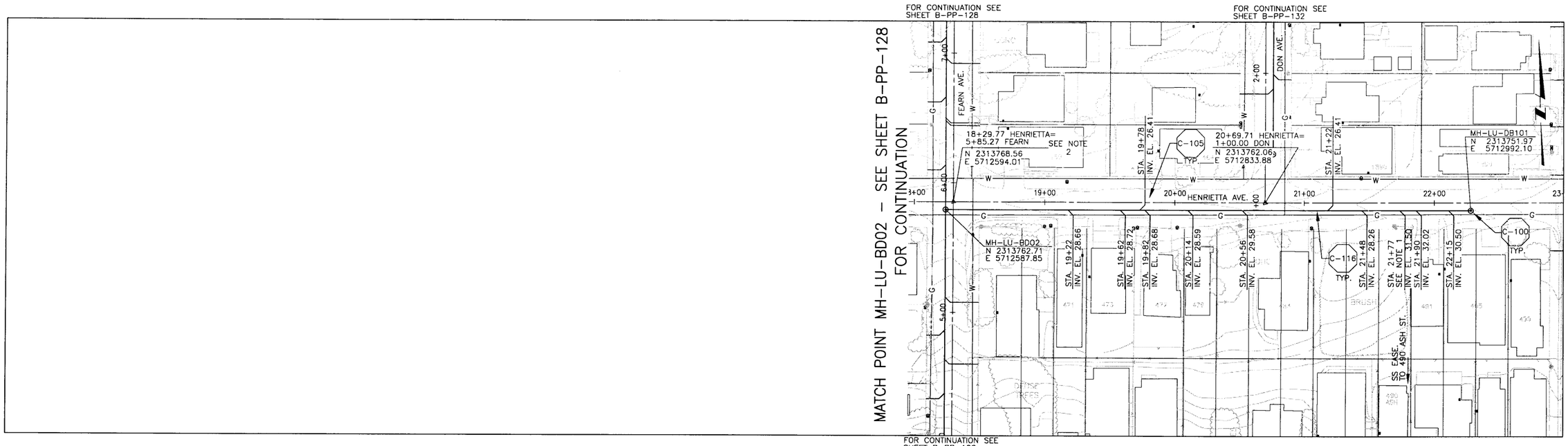

PLAN ON HENRIETTA AVENUE

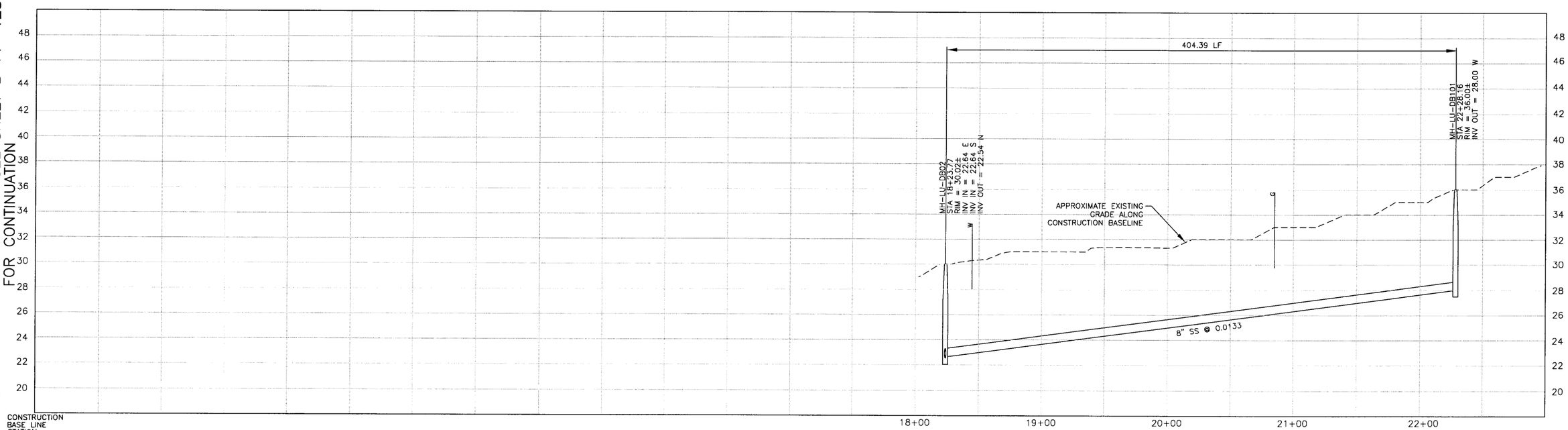

PROFILE ON HENRIETTA AVENUE

NOTES:

1. LATERAL SERVES 490 ASH ST. (THROUGH SS EASEMENT)
2. 450 HENRIETTA AVE SERVED ON FEARN AVE
3.

DIGALERT
DIAL TOLL FREE 1-800-642-2444
AT LEAST TWO DAYS BEFORE YOU DIG
UNDERGROUND SERVICE ALERT OF NORTHERN CALIFORNIA

REGISTERED PROFESSIONAL ENGINEER JEFFREY L. ERRICK Lic. No. 40,657 Expires 6/07 STATE OF CALIFORNIA

REV	DATE	BY	DESCRIPTION

SCALE
HORZ: 1"=40'
VERT: 1"= 4'

WARNING
0 1/2 1
IF THIS BAR DOES NOT MEASURE 1" THEN DRAWING IS NOT TO SCALE

DESIGNED SH/GH
DRAWN KS/JM/AF/BF
CHECKED SH

SUBMITTED BY
JOHN A. BERGEN — C31069 LICENSE NO. — 02/16/04 DATE
STEVE J. HYLAND — C23892 LICENSE NO. — 02/16/04 DATE

LOS OSOS COMMUNITY SERVICES DISTRICT

MWH Walnut Creek, California

eda design professionals
civil engineers • land surveyors • land planners
1998 santa barbara st • san luis obispo, ca 93401
ph: 805/549-8658 • email: eda@edainc.com

LOS OSOS WASTEWATER PROJECT
PLAN AND PROFILE
HENRIETTA AVENUE
STA 18+23.77 TO STA 22+28.16

SHEET B-PP-129

K:\22650000\base\EDA-Work\PP-SHEETS - 100% Submittal\29 - Henrietta.dwg 2/05/04 09:11 AM shawnag JOB NO. 1481166

MATCH POINT MH-LU-DB03

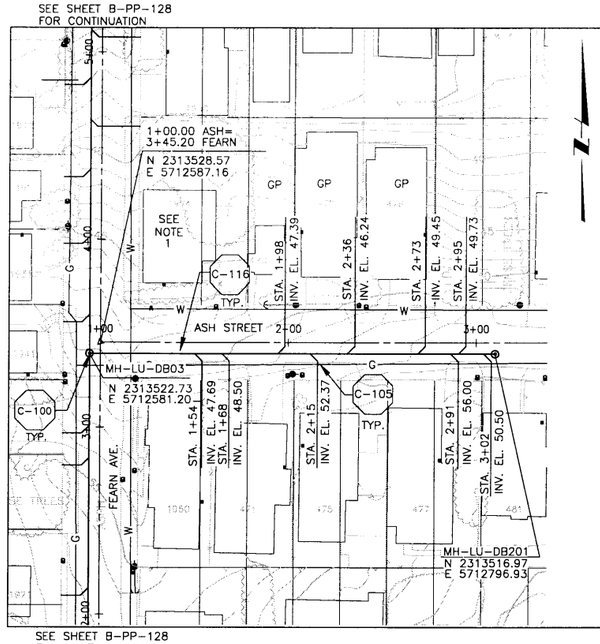

PLAN ON ASH STREET

MATCH POINT MH-LU-DB03

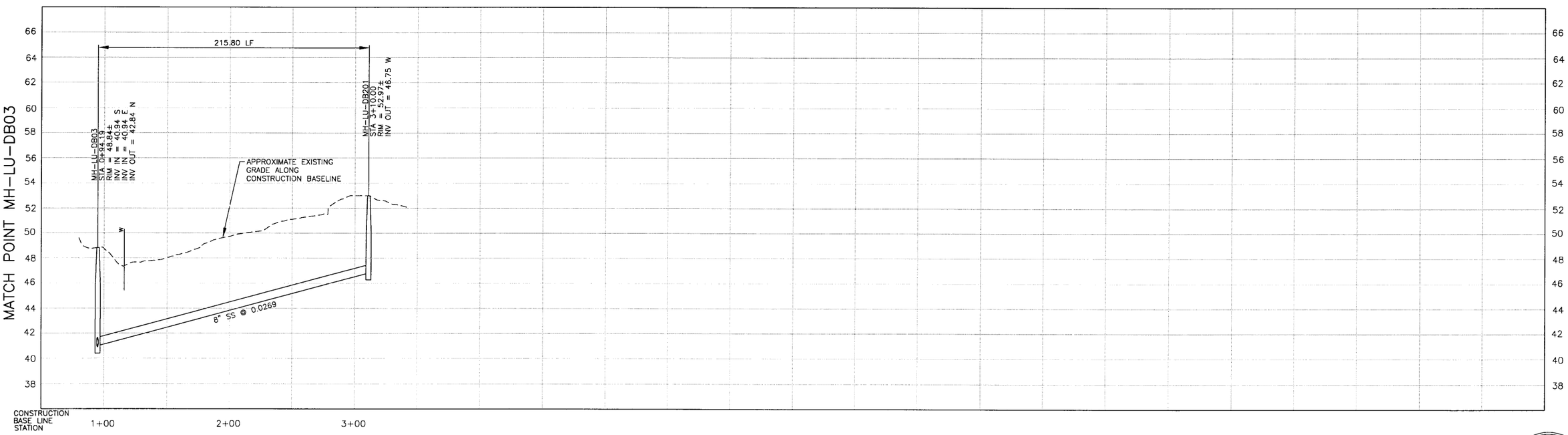

PROFILE ON ASH STREET

NOTES:

1. 1924 ASH ST SERVED ON FEARN AVE
2.
3.

DIGALERT
DIAL TOLL FREE
1-800-642-2444
AT LEAST TWO DAYS
BEFORE YOU DIG
UNDERGROUND SERVICE ALERT OF NORTHERN CALIFORNIA

REGISTERED PROFESSIONAL ENGINEER
JEFFREY J. EMRICK
C.E. No. 40,657
Expires 3/0
CIVIL
STATE OF CALIFORNIA

REV	DATE	BY	DESCRIPTION

SCALE
HORZ: 1"=40'
VERT: 1"= 4'

WARNING
0 1/2 1
IF THIS BAR DOES NOT MEASURE 1" THEN DRAWING IS NOT TO SCALE

DESIGNED SH/GH
DRAWN KS/JM/AF/BF
CHECKED SH

SUBMITTED BY
JOHN A. BERGEN — C31069 — LICENSE NO. — 02/16/04 — DATE
STEVE J. HYLAND — C23892 — LICENSE NO. — 02/16/04 — DATE

LOS OSOS
COMMUNITY SERVICES DISTRICT

MWH
Walnut Creek, California

eda design professionals
civil engineers • land surveyors • land planners
1998 santa barbara st • san luis obispo, ca 93401
ph: 805/549-8658 • email: eda@edainc.com

LOS OSOS WASTEWATER PROJECT
PLAN AND PROFILE
ASH STREET
STA 0+94.19 TO STA 3+10.00

SHEET
B-PP-130

A:\32050000\base\DA-Work\PP-SHEETS - 100% Submittal\30 - Ash.dwg 2/05/04 09:12 AM shawnog JOB NO 1481166

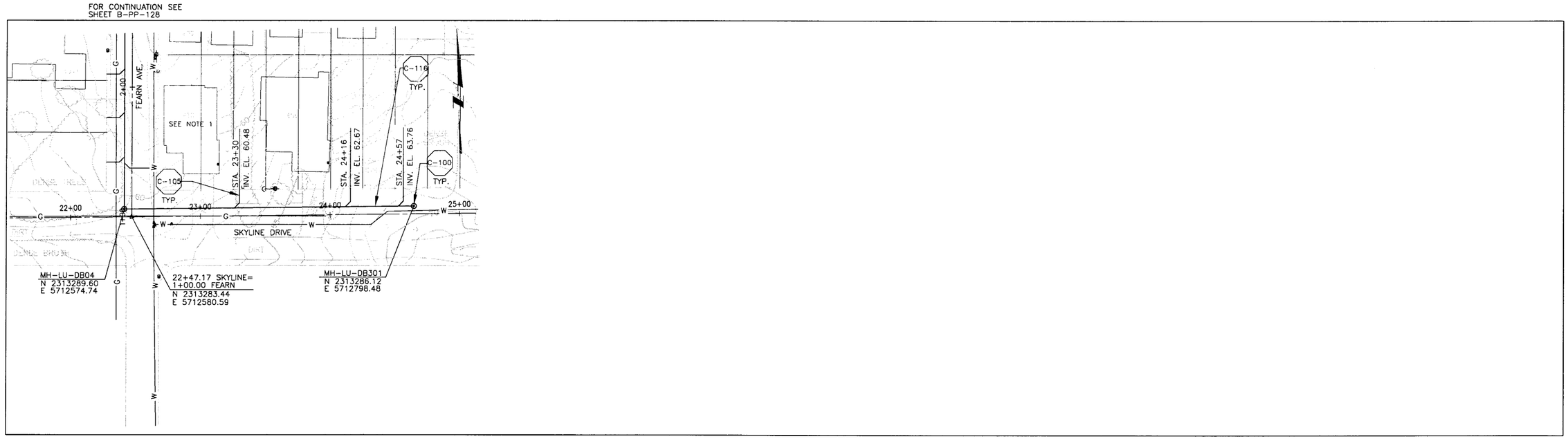

NOTES:

1. 450 SKYLINE DRIVE SERVED ON FEARN AVE
2.
3.

DIGALERT DIAL TOLL FREE 1-800-642-2444 AT LEAST TWO DAYS BEFORE YOU DIG UNDERGROUND SERVICE ALERT OF NORTHERN CALIFORNIA

REGISTERED PROFESSIONAL ENGINEER JEFFREY J. EMRICK No. 40,657 Expires 3/07 CIVIL STATE OF CALIFORNIA

REV	DATE	BY	DESCRIPTION

SCALE: HORZ: 1"=40' VERT: 1"= 4'

WARNING: 0 1/2 1 IF THIS BAR DOES NOT MEASURE 1" THEN DRAWING IS NOT TO SCALE

DESIGNED SH/GH
DRAWN KS/JM/AF/BF
CHECKED SH

SUBMITTED BY
JOHN A. BERGEN — C31069 LICENSE NO. — 02/16/04 DATE
STEVE J. HYLAND — C23892 LICENSE NO. — 02/16/04 DATE

LOS OSOS COMMUNITY SERVICES DISTRICT

MWH Walnut Creek, California

eda design professionals — civil engineers • land surveyors • land planners 1998 santa barbara st • san luis obispo, ca 93401 ph: 805/548-8658 • email: eda@edainc.com

LOS OSOS WASTEWATER PROJECT
PLAN AND PROFILE
SKYLINE DRIVE
STA. 22+41.23 TO 24+65.00

SHEET B-PP-131

K:\22650000\base\EDA-Work\PP-SHEETS - 100% Submittal\31 - Skyline.dwg 2/05/04 09:13 AM shawnag JOB NO. 1481166

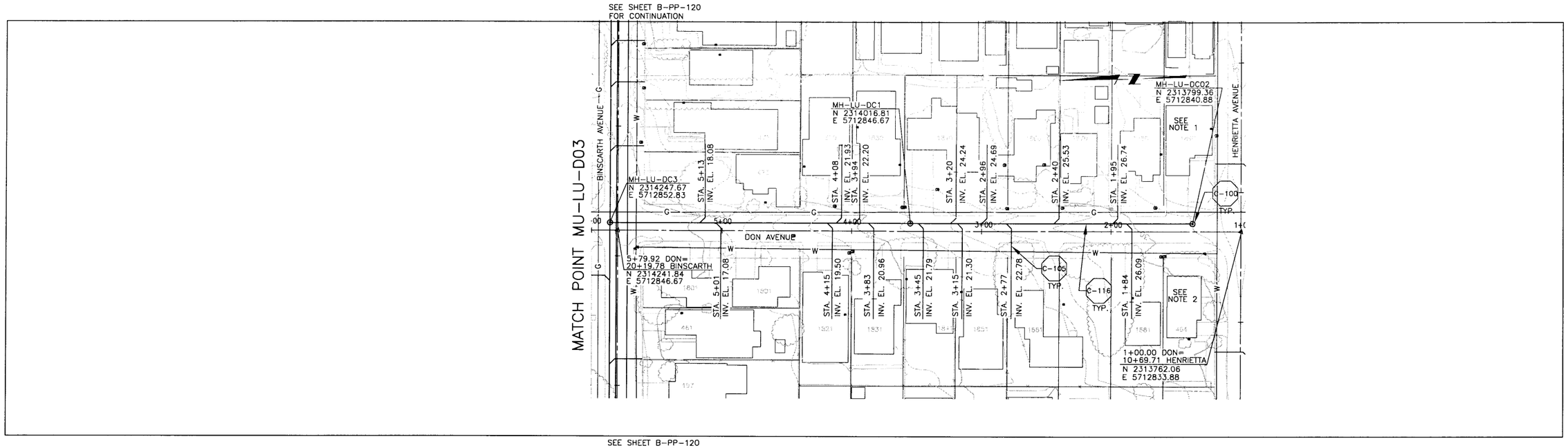

PLAN ON DON AVENUE

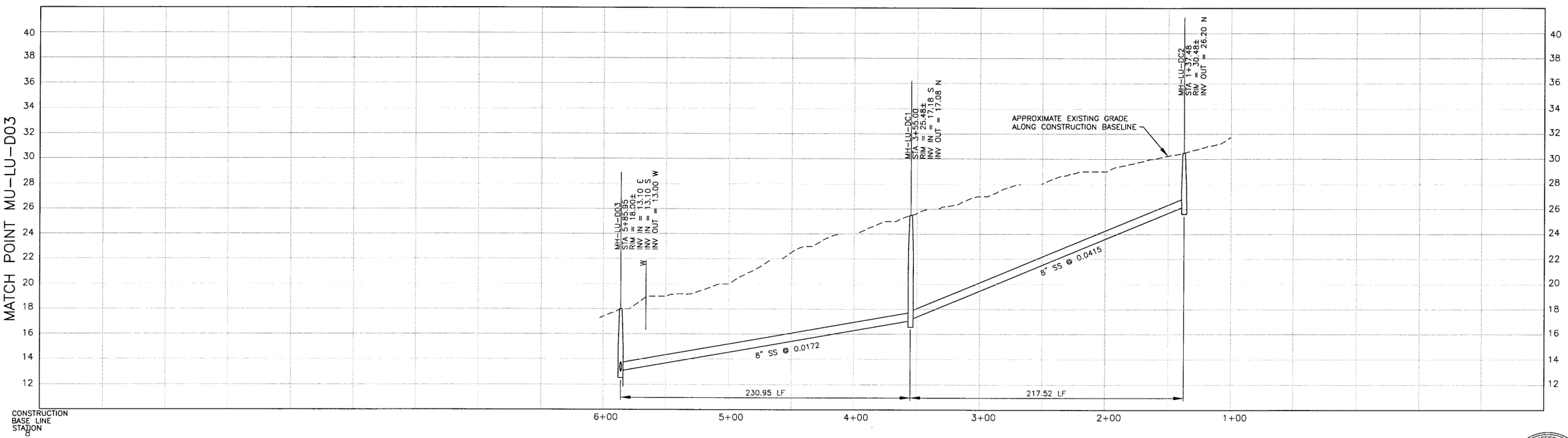

PROFILE ON DON AVENUE

NOTES:

1. 1890 DON AVE SERVED ON HENRIETTA AVE
2. 464 DON AVE SERVED ON HENRIETTA AVE
3.

DIGALERT
DIAL TOLL FREE
1-800-642-2444
AT LEAST TWO DAYS BEFORE YOU DIG
UNDERGROUND SERVICE ALERT OF NORTHERN CALIFORNIA

REGISTERED PROFESSIONAL ENGINEER
JEFFREY J. EMROCK
Lic. No. 40,657
Expires 3/06
CIVIL
STATE OF CALIFORNIA

REV	DATE	BY	DESCRIPTION

SCALE
HORZ: 1"=40'
VERT: 1"= 4'

WARNING
0 1/2 1
IF THIS BAR DOES NOT MEASURE 1" THEN DRAWING IS NOT TO SCALE

DESIGNED SH/GH
DRAWN KS/JM/AF/BF
CHECKED SH

SUBMITTED BY
JOHN A BERGEN — C31069 LICENSE NO. — 02/16/04 DATE
STEVE J. HYLAND — C23892 LICENSE NO. — 02/16/04 DATE

LOS OSOS
COMMUNITY SERVICES DISTRICT

MWH
Walnut Creek, California

eda design professionals
civil engineers • land surveyors • land planners
1998 santa barbara st • san luis obispo, ca 93401
ph: 805/549-8658 • email: eda@edainc.com

LOS OSOS WASTEWATER PROJECT
PLAN AND PROFILE
DON AVENUE
STA 1+37.48 TO STA 5+85.95

SHEET
B-PP-132

MATCH POINT MH-LU-D04 - SEE SHEET B-PP-120 FOR CONTINUATION

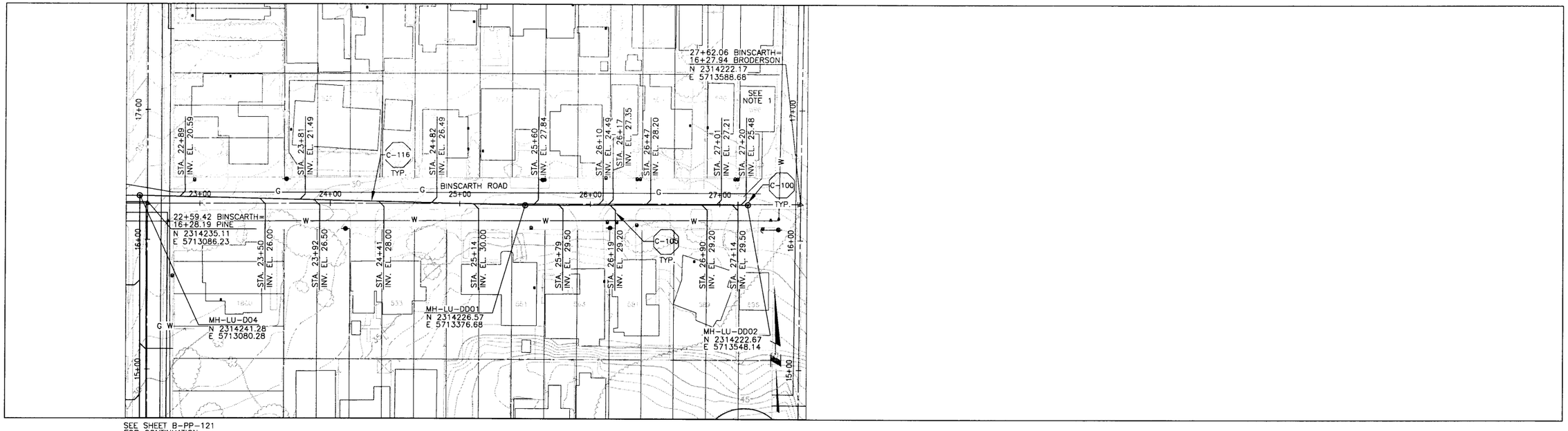

SEE SHEET B-PP-121 FOR CONTINUATION

PLAN ON BINSCARTH ROAD

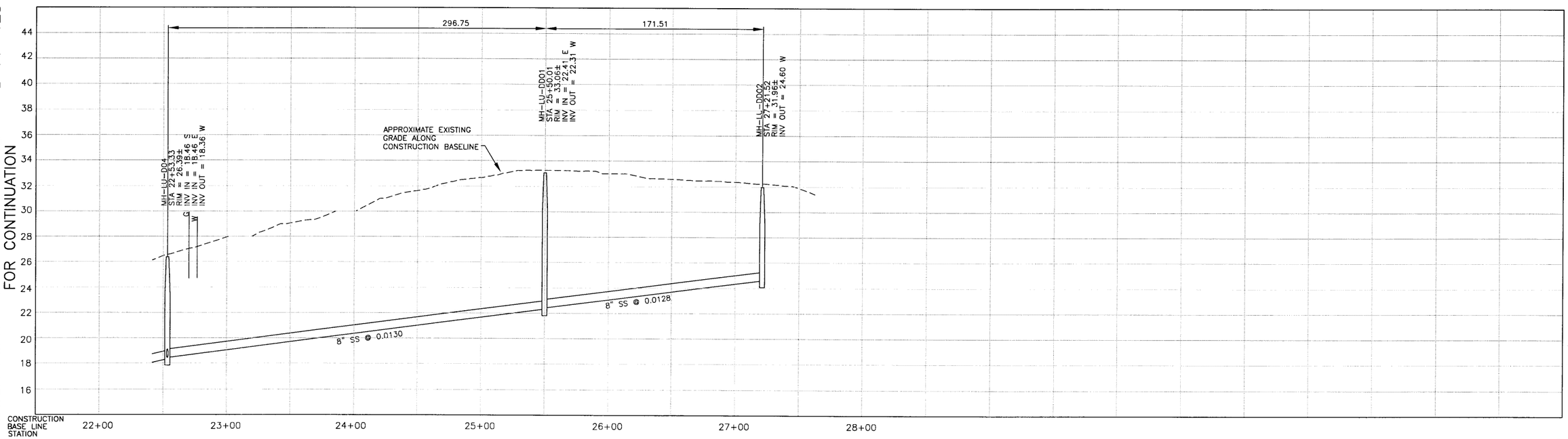

PROFILE ON BINSCARTH ROAD

NOTES:

1. CONSTRUCT LATERAL TO 596 BINSCARTH @ MIN. 1% SLOPE ON-SITE AND WITHIN RIGHT OF WAY. CONFORM TO U.P.C. REQUIREMENTS FOR 1% SLOPE.
2.
3.

DIGALERT
DIAL TOLL FREE
1-800-642-2444
AT LEAST TWO DAYS BEFORE YOU DIG
UNDERGROUND SERVICE ALERT OF NORTHERN CALIFORNIA

REGISTERED PROFESSIONAL ENGINEER JEFFREY J. EMRICK Lic. No. 40,657 Expires 3/07 CIVIL STATE OF CALIFORNIA

REV	DATE	BY	DESCRIPTION

SCALE: HORZ: 1"=40' VERT: 1"= 4'

WARNING: 0 1/2 1 — IF THIS BAR DOES NOT MEASURE 1" THEN DRAWING IS NOT TO SCALE

DESIGNED SH/GH
DRAWN KS/JM/AF/BF
CHECKED SH

SUBMITTED BY
JOHN A. BERGEN — C31069 LICENSE NO. — 02/16/04 DATE
STEVE J. HYLAND — C23892 LICENSE NO. — 02/16/04 DATE

LOS OSOS COMMUNITY SERVICES DISTRICT

MWH Walnut Creek, California

eda design professionals — civil engineers • land surveyors • land planners — 1998 santa barbara st • san luis obispo, ca 93401 — ph: 805/549-8658 • email: eda@edainc.com

LOS OSOS WASTEWATER PROJECT
PLAN AND PROFILE
BINSCARTH ROAD
STA 22+53.33 TO STA 27+21.52

SHEET B-PP-133

K:\22650000\base\EDA-Work\PP-SHEETS - 100% Submittal\33 - Binscarth.dwg 2/05/04 09:14 AM shawnag JOB NO. 1481166

MATCH POINT MH-LU-D05

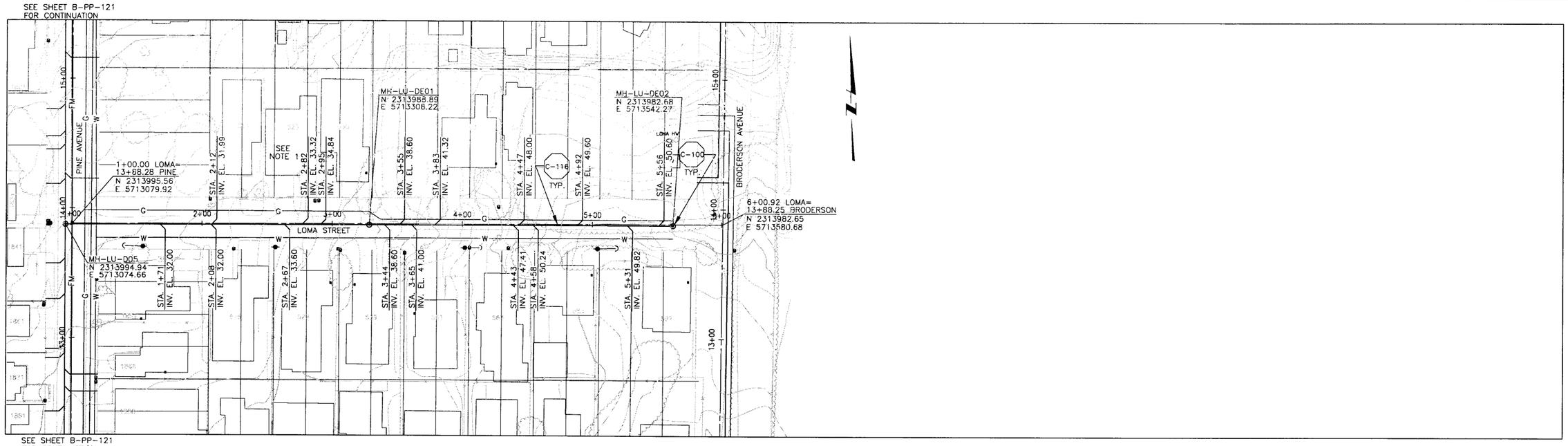

PLAN ON LOMA STREET

MATCH POINT MH-LU-D05

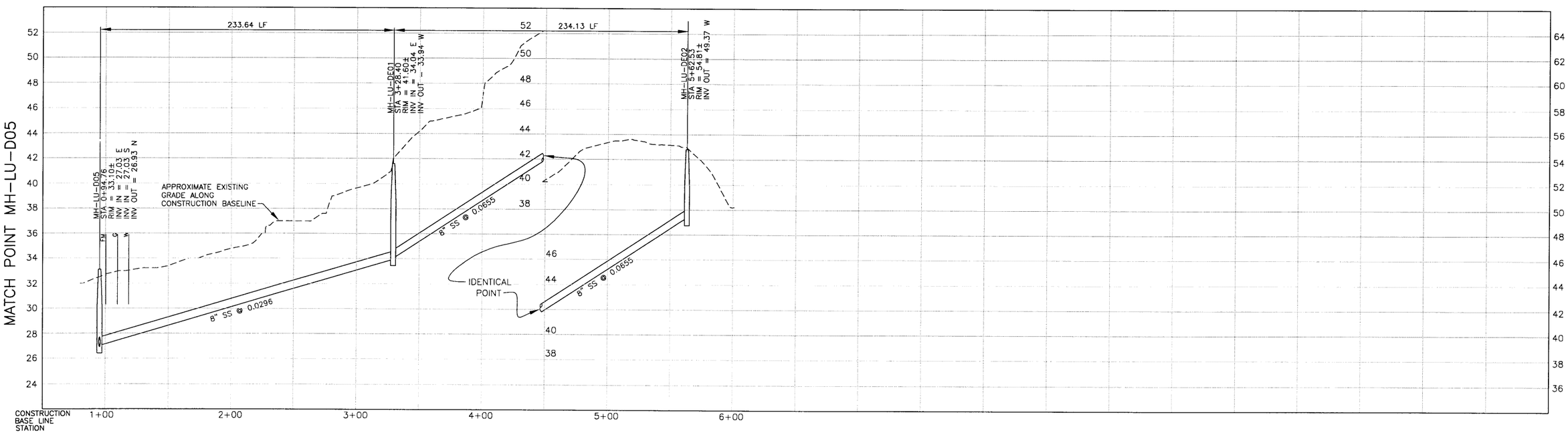

PROFILE ON LOMA STREET

NOTES:

1. CONSTRUCT SS LAT. TO 520 LOMA @ 1% ON-SITE AND WITHIN RIGHT OF WAY
2.
3.

DIGALERT
DIAL TOLL FREE
1-800-642-2444
AT LEAST TWO DAYS BEFORE YOU DIG
UNDERGROUND SERVICE ALERT OF NORTHERN CALIFORNIA

REGISTERED PROFESSIONAL ENGINEER
GEOFFREY J. ENRIGHT
Lic. No. 40,657
Expires 3/07
CIVIL
STATE OF CALIFORNIA

REV	DATE	BY	DESCRIPTION

SCALE
HORZ: 1"=40'
VERT: 1"= 4'

WARNING
0 1/2 1
IF THIS BAR DOES NOT MEASURE 1" THEN DRAWING IS NOT TO SCALE

DESIGNED SH/GH
DRAWN KS/JM/AF/BF
CHECKED SH

SUBMITTED BY
JOHN A. BERGEN — C31069 — LICENSE NO. — 02/16/04 — DATE
STEVEN J. HYLAND — C23892 — LICENSE NO. — 02/16/04 — DATE

LOS OSOS
COMMUNITY SERVICES DISTRICT

MWH
Walnut Creek, California

eda design professionals
civil engineers • land surveyors • land planners
1998 santa barbara st • san luis obispo, ca 93401
ph: 805/549-8658 • email: eda@edainc.com

LOS OSOS WASTEWATER PROJECT
PLAN AND PROFILE
LOMA STREET
STA 0+94.76 TO STA 5+62.53

SHEET
B-PP-134

K:\2265000\bas\EDA-Work\PP-SHEETS - 100% Submittal\34 - Loma.dwg 2/05/04 09:15 AM shawnog JOB NO. 1481156

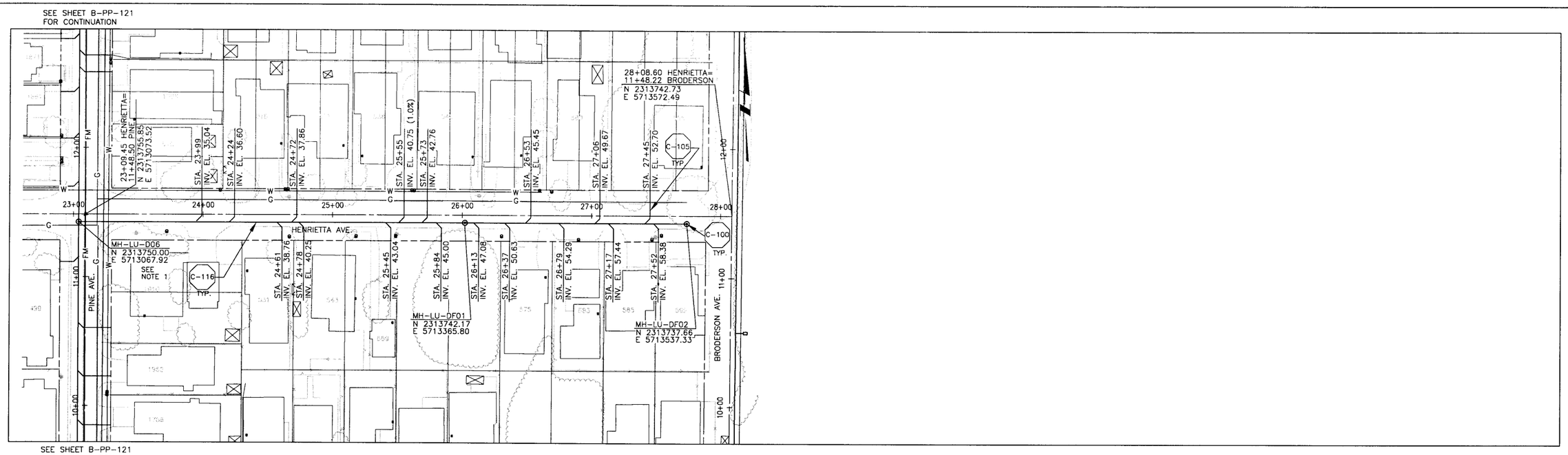

SEE SHEET B-PP-121
FOR CONTINUATION

PLAN ON HENRIETTA AVENUE

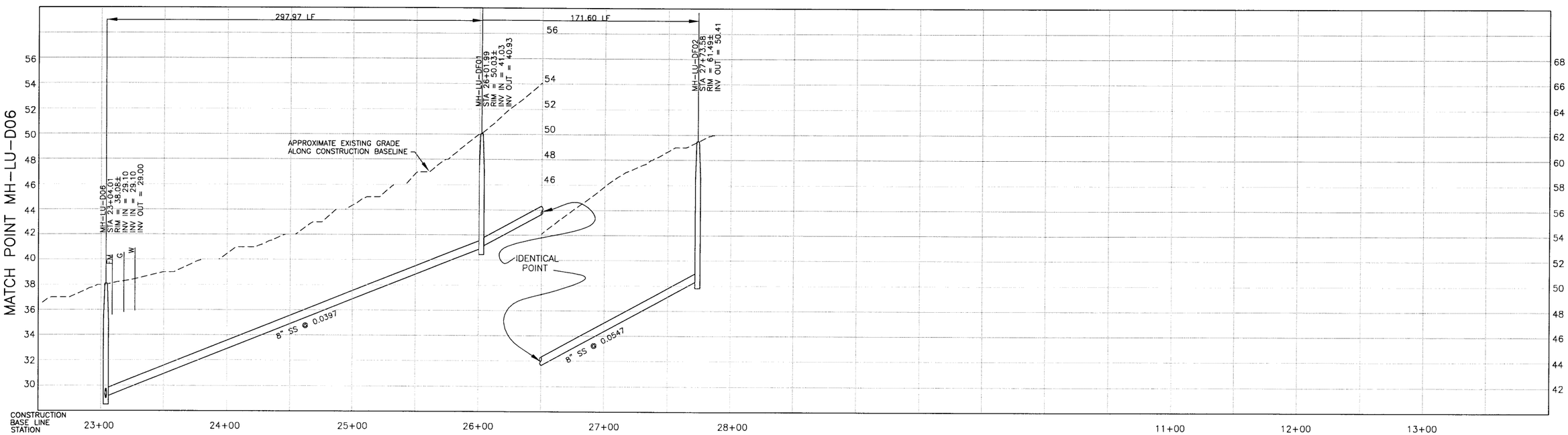

PROFILE ON HENRIETTA AVENUE

NOTES:

1. 1910 HENRIETTA AVE SERVED ON PINE AVE
2.
3.

DIGALERT
DIAL TOLL FREE
1-800-642-2444
AT LEAST TWO DAYS BEFORE YOU DIG
UNDERGROUND SERVICE ALERT OF NORTHERN CALIFORNIA

REGISTERED PROFESSIONAL ENGINEER
JEFFREY J. EMRICK
No. 40,657
Expires 3/07
STATE OF CALIFORNIA

REV	DATE	BY	DESCRIPTION

SCALE
HORZ: 1"=40'
VERT: 1"= 4'

WARNING
0 1/2 1
IF THIS BAR DOES NOT MEASURE 1" THEN DRAWING IS NOT TO SCALE

DESIGNED SH/GH
DRAWN KS/JM/AF/BF
CHECKED SH

SUBMITTED BY
JOHN A. BERGEN — C31069 LICENSE NO. — 02/16/04 DATE
STEVE J. HYLAND — C23892 LICENSE NO. — 02/16/04 DATE

LOS OSOS
COMMUNITY SERVICES DISTRICT

MWH
Walnut Creek, California

eda design professionals
civil engineers • land surveyors • land planners
1998 santa barbara st • san luis obispo, ca 93401
ph: 805/549-8658 • email: eda@edainc.com

LOS OSOS WASTEWATER PROJECT
PLAN AND PROFILE
HENRIETTA AVENUE
STA 23+04.01 TO STA 27+73.58

SHEET
B-PP-135

K:\22650000\base\EDA-Work\PP-SHEETS - 100% Submittal\35 - Henrietta.dwg 2/05/04 09:16 AM shawnag JOB NO. 1481166

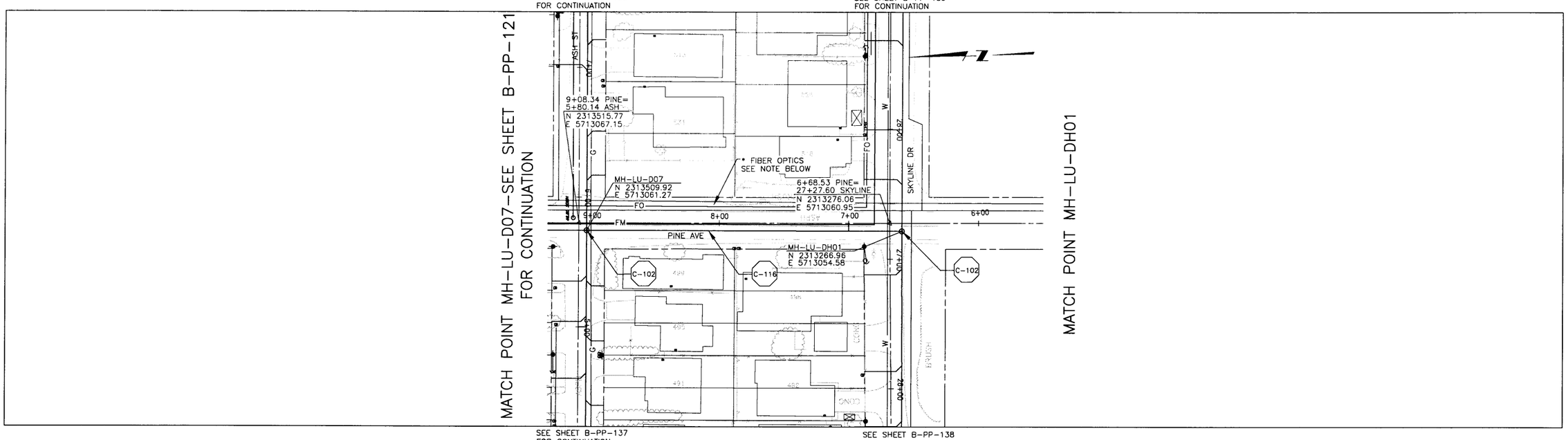

PLAN ON PINE AVENUE

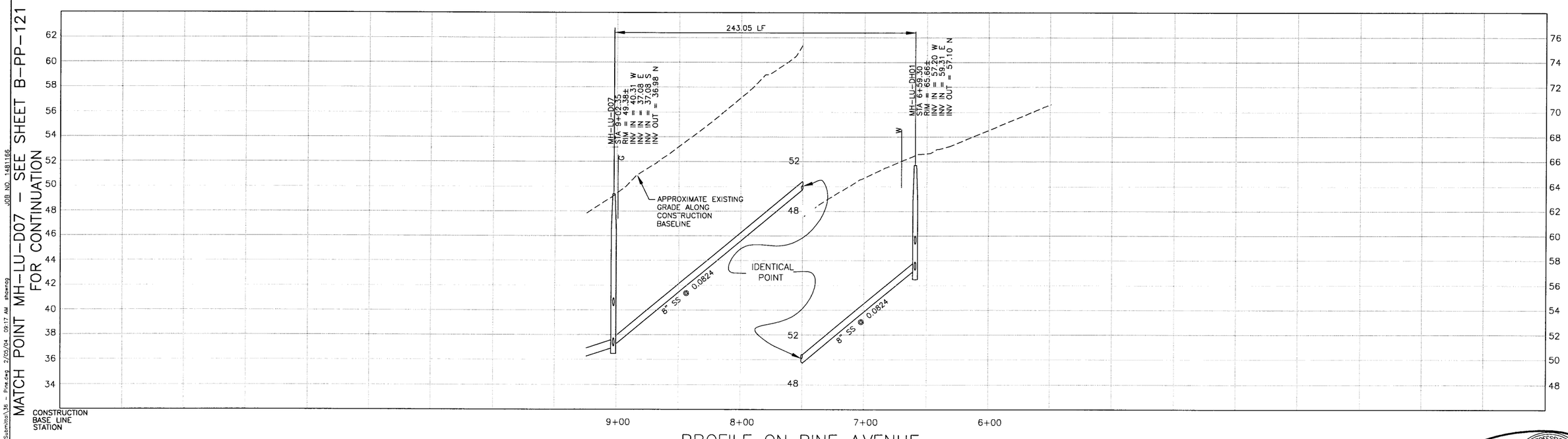

PROFILE ON PINE AVENUE

NOTES:

1.
2.
3.

*NOTE:

ACTUAL LOCATION OF FIBER OPTICS FACILITIES OWNED BY CHARTER COMM. IS UNKNOWN. HORIZONTAL AND VERTICAL LOCATION SHALL BE VERIFIED BY THE CONTRACTOR PRIOR TO CONSTRUCTION.

DIGALERT
DIAL TOLL FREE 1-800-642-2444
AT LEAST TWO DAYS BEFORE YOU DIG
UNDERGROUND SERVICE ALERT OF NORTHERN CALIFORNIA

REGISTERED PROFESSIONAL ENGINEER
JEFFREY J. EMBOY
Lic. No. 40,657
Exp. 3/07
CIVIL
STATE OF CALIFORNIA

REV	DATE	BY	DESCRIPTION

SCALE
HORZ: 1"=40'
VERT: 1"= 4'

WARNING
0 1/2 1
IF THIS BAR DOES NOT MEASURE 1" THEN DRAWING IS NOT TO SCALE

DESIGNED SH/GH
DRAWN KS/JM/AF/BF
CHECKED SH

SUBMITTED BY
JOHN A. BERGEN — C31069 LICENSE NO. — 02/16/04 DATE
STEVEN J. HYLAND — C23892 LICENSE NO. — 02/16/04 DATE

LOS OSOS COMMUNITY SERVICES DISTRICT

MWH Walnut Creek, California

eda design professionals
civil engineers • land surveyors • land planners
1998 santa barbara st • san luis obispo, ca 93401
ph: 805/549-8658 • email: eda@edainc.com

LOS OSOS WASTEWATER PROJECT
PLAN AND PROFILE
PINE AVENUE
STA 6+59.30 TO STA 9+02.35

SHEET
B-PP-136

K:\2650000\base\EDA-Work\PP-SHEETS - 100% Submittal\36 - Pine.dwg 2/05/04 09:17 AM shawnsg JOB NO 1481166

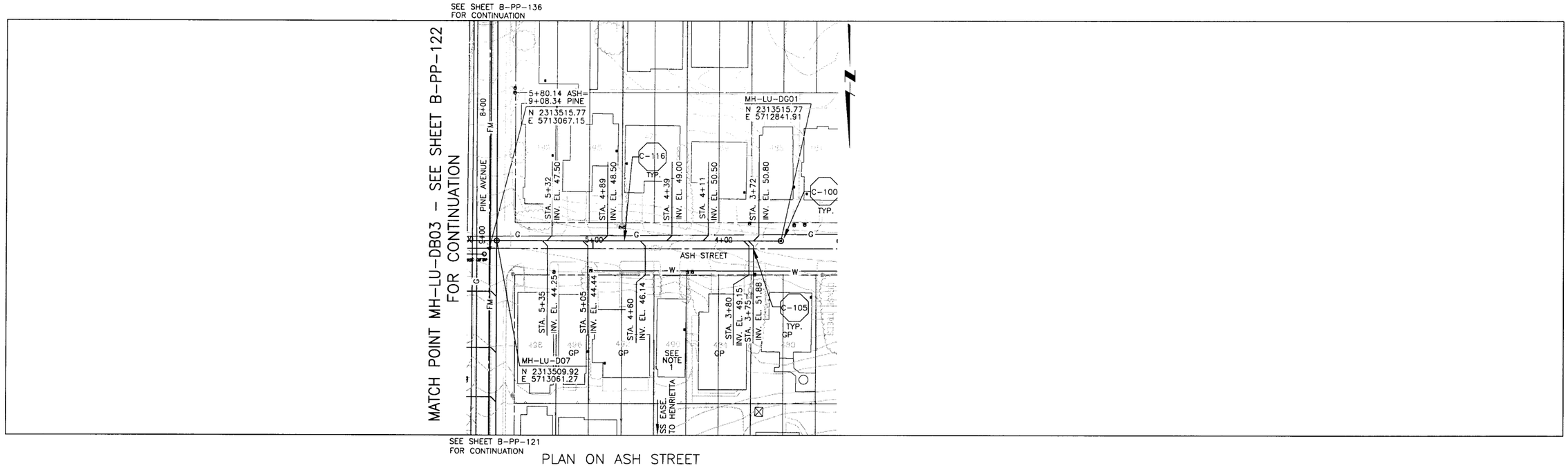

PLAN ON ASH STREET

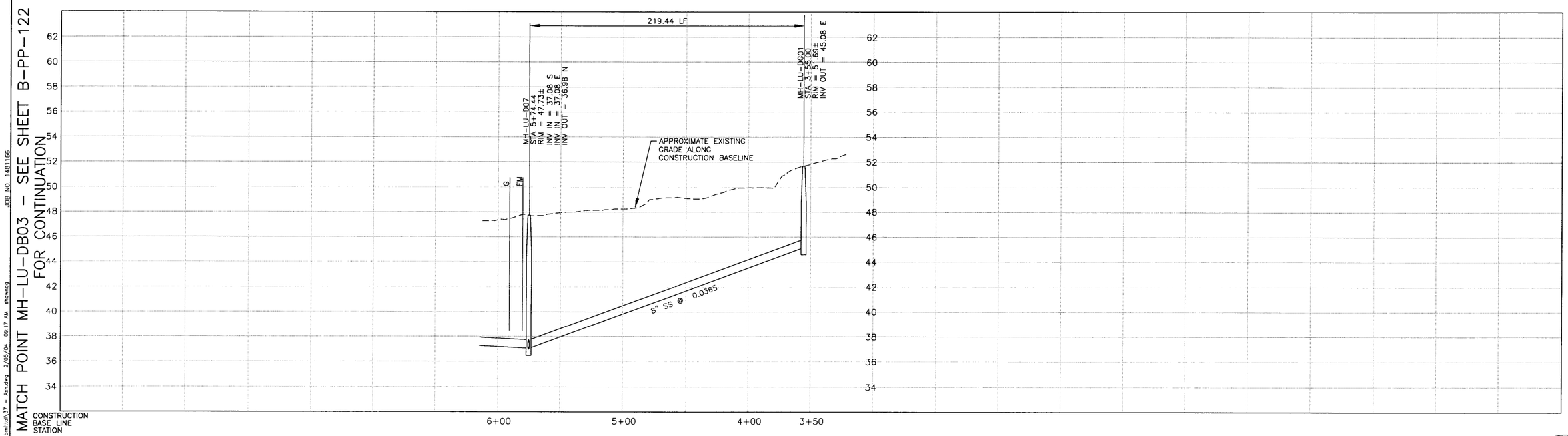

PROFILE ON ASH STREET

NOTES:

490 ASH ST. SERVED ON HENRIETTA AVE THROUGH SS EASEMENT
2.
3.

DIGALERT
DIAL TOLL FREE
1-800-642-2444
AT LEAST TWO DAYS
BEFORE YOU DIG
UNDERGROUND SERVICE ALERT OF NORTHERN CALIFORNIA

REGISTERED PROFESSIONAL ENGINEER
JEFFREY J. EMRICK
No. C 40,657
Expires 3/07
CIVIL
STATE OF CALIFORNIA

REV	DATE	BY	DESCRIPTION

SCALE
HORZ: 1"=40'
VERT: 1"= 4'

WARNING
0 1/2 1
IF THIS BAR DOES NOT MEASURE 1" THEN DRAWING IS NOT TO SCALE

DESIGNED SH/GH
DRAWN KS/JM/AF/BF
CHECKED SH

SUBMITTED BY
JOHN A. BERGEN — C31069 LICENSE NO. — 02/16/04 DATE
STEVE J. HYLAND — C23892 LICENSE NO. — 02/16/04 DATE

LOS OSOS
COMMUNITY SERVICES DISTRICT

MWH
Walnut Creek, California

eda design professionals
civil engineers • land surveyors • land planners
1998 santa barbara st • san luis obispo, ca 93401
ph: 805/549-8658 • email: eda@edainc.com

LOS OSOS WASTEWATER PROJECT
PLAN AND PROFILE
ASH STREET
STA 3+55.00 TO STA 5+74.44

SHEET
B-PP-137

K:\22650000\base\DWG-Work\PP-SHEETS - 100% Submittal\37 - Ash.dwg 2/05/04 09:17 AM shawnag JOB NO. 1481166

MATCH POINT MH-LU-DH01-SEE SHEET B-PP-139
FOR CONTINUATION

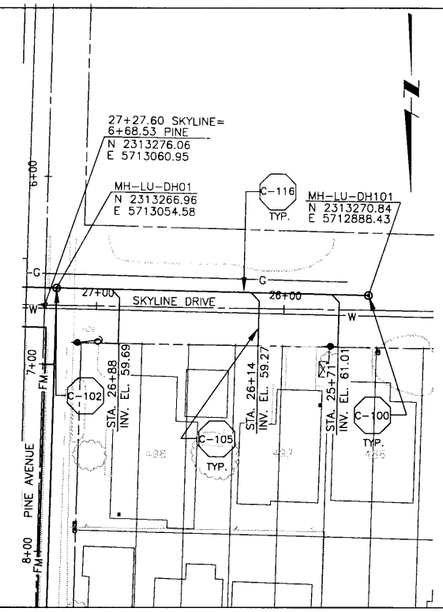

SEE SHEET B-PP-136
FOR CONTINUATION

PLAN ON SKYLINE DRIVE

MATCH POINT MH-LU-DH01 - SEE SHEET B-PP-139
FOR CONTINUATION

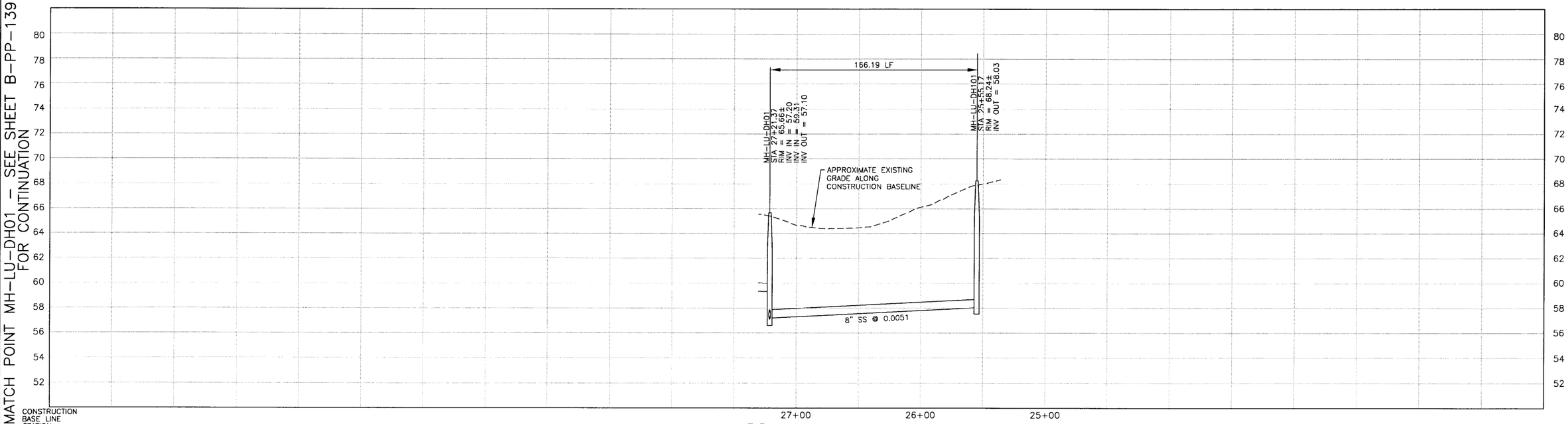

PROFILE ON SKYLINE DRIVE

NOTES:

1.
2.
3.

DIGALERT
DIAL TOLL FREE
1-800-642-2444
AT LEAST TWO DAYS
BEFORE YOU DIG
UNDERGROUND SERVICE ALERT OF NORTHERN CALIFORNIA

REGISTERED PROFESSIONAL ENGINEER
JEFFREY J. EMICH
Lic. No. 40,65
Expires 6/07
CIVIL
STATE OF CALIFORNIA

REV	DATE	BY	DESCRIPTION

SCALE
HORZ: 1"=40'
VERT: 1"= 4'

WARNING
0 1/2 1
IF THIS BAR DOES NOT MEASURE 1" THEN DRAWING IS NOT TO SCALE

DESIGNED SH/GH
DRAWN KS/JM/AF/BF
CHECKED SH

SUBMITTED BY
JOHN A. BERGEN — C31069 LICENSE NO. — 02/16/04 DATE
STEVE J. HYLAND — C23892 LICENSE NO. — 02/16/04 DATE

LOS OSOS
COMMUNITY SERVICES DISTRICT

MWH
Walnut Creek, California

eda design professionals
civil engineers • land surveyors • land planners
1998 santa barbara st • san luis obispo, ca 93401
ph: 805/549-8658 • email: eda@edainc.com

LOS OSOS WASTEWATER PROJECT
PLAN AND PROFILE
SKYLINE DRIVE
STA 25+55.17 TO STA 27+21.37

SHEET
B-PP-138

JOB NO. 1481166

K:\32650000\base\CDA-Work\PP-SHEETS - 100% Submittal\38 - Skyline.dwg 2/05/04 09:18 AM shawnag

MATCH POINT MH-LU-DH01 - SEE SHEET B-PP-138 FOR CONTINUATION

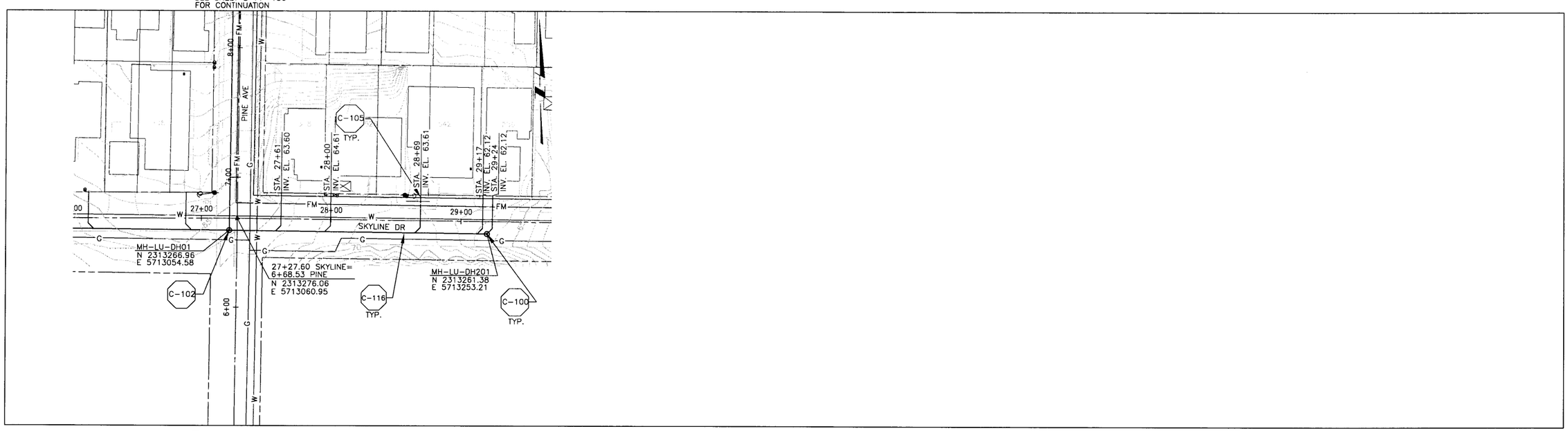

PLAN ON SKYLINE DRIVE

PROFILE ON SKYLINE DRIVE

NOTES:
1.
2.
3.

DIGALERT DIAL TOLL FREE 1-800-642-2444 AT LEAST TWO DAYS BEFORE YOU DIG UNDERGROUND SERVICE ALERT OF NORTHERN CALIFORNIA

REGISTERED PROFESSIONAL ENGINEER JEFFREY J. EMRICK Lic. No. 40,657 Expires 3/07 CIVIL STATE OF CALIFORNIA

REV	DATE	BY	DESCRIPTION

SCALE: HORZ: 1"=40' VERT: 1"= 4'

WARNING: 0 1/2 1 IF THIS BAR DOES NOT MEASURE 1" THEN DRAWING IS NOT TO SCALE

DESIGNED SH/GH
DRAWN KS/JM/AF/BF
CHECKED SH

SUBMITTED BY
JOHN A. BERGEN — C31069 LICENSE NO. — 02/16/04 DATE
STEVE J. HYLAND — C23892 LICENSE NO. — 02/16/04 DATE

LOS OSOS COMMUNITY SERVICES DISTRICT

MWH Walnut Creek, California

eda design professionals — civil engineers • land surveyors • land planners 1998 santa barbara st • san luis obispo, ca 93401 ph: 805/549-8658 • email: eda@edainc.com

LOS OSOS WASTEWATER PROJECT
PLAN AND PROFILE
SKYLINE DRIVE
STA 27+21.37 TO STA 29+20.18

SHEET B-PP-139

K:\22650000\base\EDA-Work\PP-SHEETS - 100% Submittal\39 - Skyline.dwg 2/05/04 09:19 AM shawnag JOB NO. 1481166

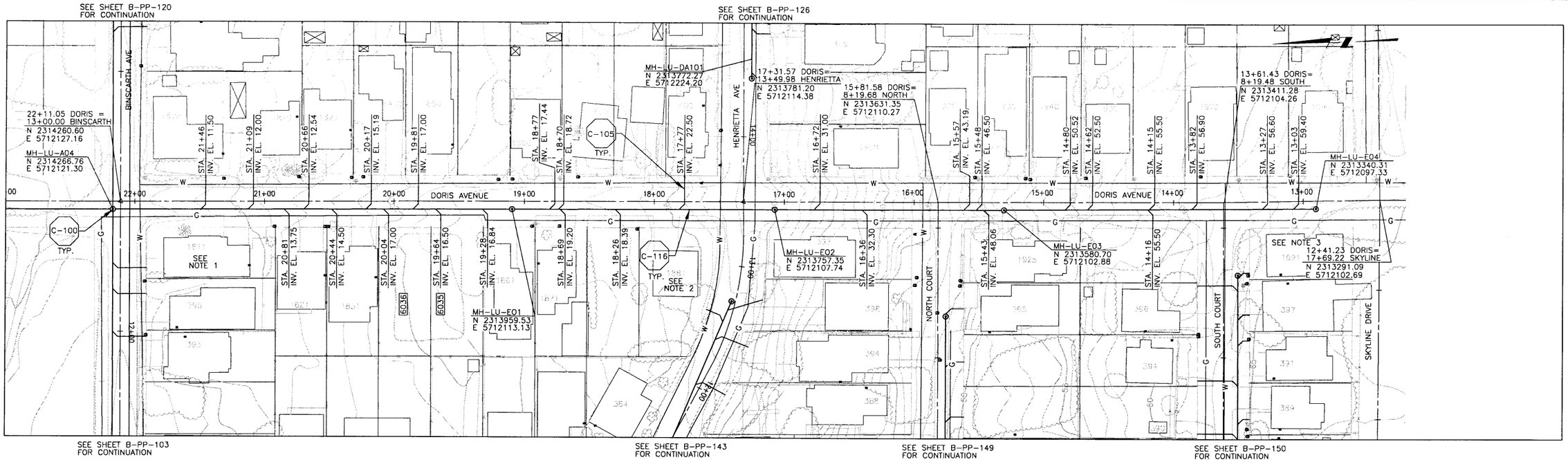

PLAN ON DORIS AVENUE

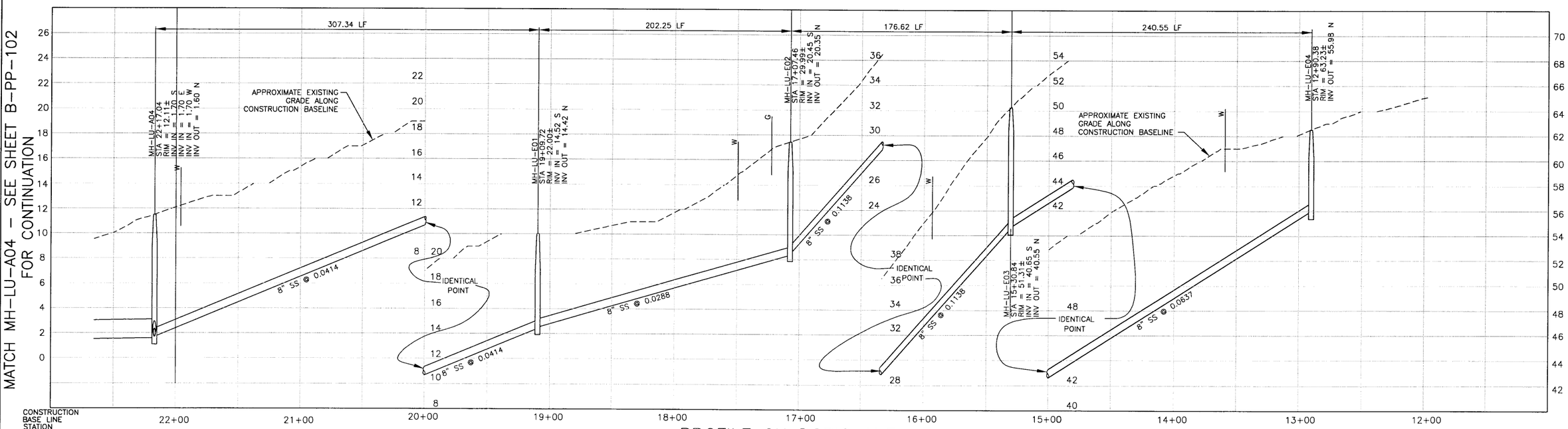

PROFILE ON DORIS AVENUE

NOTES:

1. 1811 DORIS AVE SERVED ON BINSCARTH AVE
2. 1881 DORIS AVE SERVED ON HENRIETTA AVE
3. 1991 DORIS AVE SERVED ON SOUTH COURT

DIGALERT DIAL TOLL FREE 1-800-642-2444 AT LEAST TWO DAYS BEFORE YOU DIG UNDERGROUND SERVICE ALERT OF NORTHERN CALIFORNIA

REGISTERED PROFESSIONAL ENGINEER JEFFREY J. EMRICK No. 40,657 Expires 3/07 CIVIL STATE OF CALIFORNIA

REV	DATE	BY	DESCRIPTION

SCALE: HORZ: 1"=40' VERT: 1"= 4'

WARNING: 0 1/2 1 IF THIS BAR DOES NOT MEASURE 1" THEN DRAWING IS NOT TO SCALE

DESIGNED SH/GH
DRAWN KS/JM/AF/BF
CHECKED SH

SUBMITTED BY
JOHN A. BERGEN — C31069 LICENSE NO. — 02/16/04 DATE
STEVE J. HYLAND — C23892 LICENSE NO. — 02/16/04 DATE

LOS OSOS COMMUNITY SERVICES DISTRICT

MWH Walnut Creek, California

eda design professionals — civil engineers • land surveyors • land planners 1998 santa barbara st • san luis obispo, ca 93401 ph: 805/549-8658 • email: eda@edainc.com

LOS OSOS WASTEWATER PROJECT
PLAN AND PROFILE
DORIS AVENUE
STA 12+90.38 TO STA 22+17.04

SHEET B-PP-140

K:\22650000\base\EDA-Work\PP-SHEETS - 100% Submittal\40 - Doris.dwg 2/05/04 09:20 AM shawnag JOB NO. 1481166

MATCH POINT MH-LU-F01

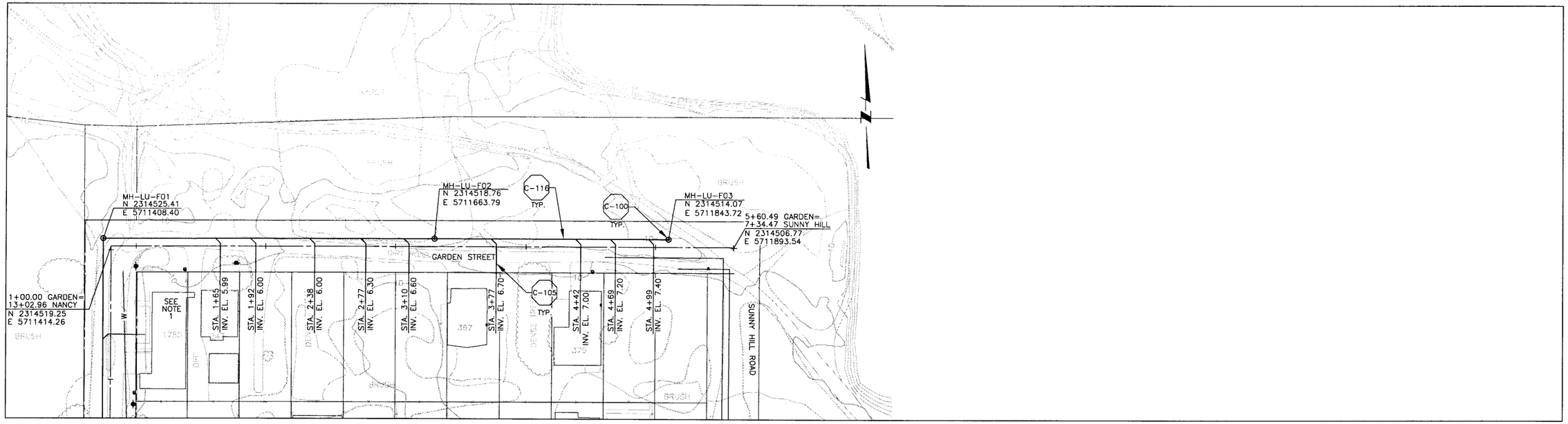

FOR CONTINUATION SEE SHEET B-PP-142

PLAN ON GARDEN STREET

MATCH POINT MH-LU-F01

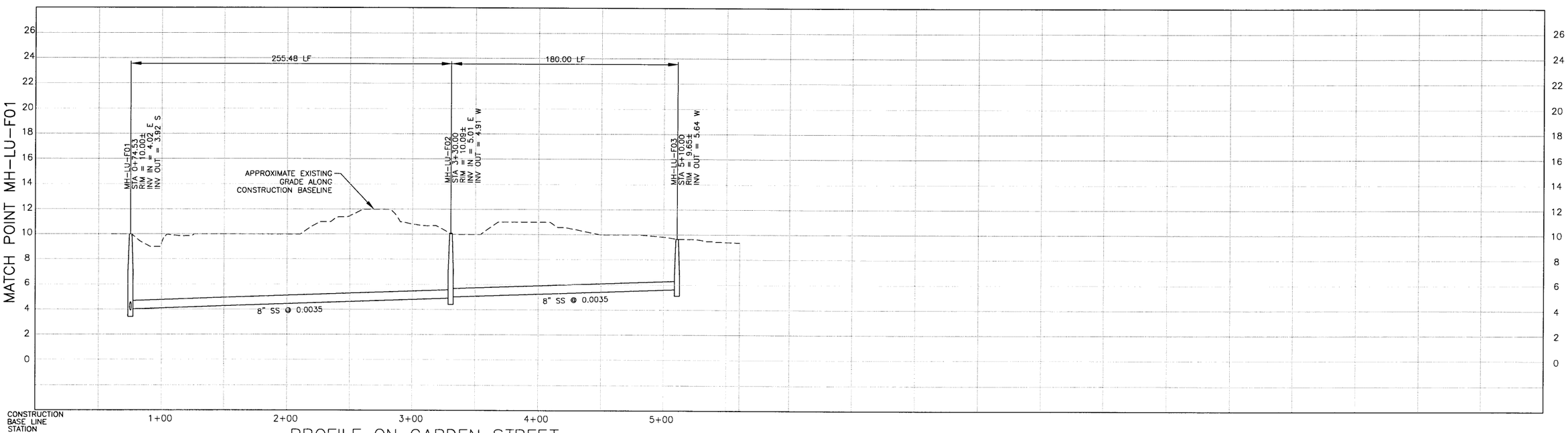

PROFILE ON GARDEN STREET

NOTES:

1. 1780 GARDEN ST. SERVED ON NANCY ST.
2.
3.

DIGALERT
DIAL TOLL FREE
1-800-642-2444
AT LEAST TWO DAYS BEFORE YOU DIG
UNDERGROUND SERVICE ALERT OF NORTHERN CALIFORNIA

REGISTERED PROFESSIONAL ENGINEER
JEFFREY J. ENRICK
Lic. No. 40,657
Expires 3/07
CIVIL
STATE OF CALIFORNIA

REV	DATE	BY	DESCRIPTION

SCALE
HORZ: 1"=40'
VERT: 1"= 4'

WARNING
0 1/2 1
IF THIS BAR DOES NOT MEASURE 1" THEN DRAWING IS NOT TO SCALE

DESIGNED SH/GH
DRAWN KS/JM/AF/BF
CHECKED SH

SUBMITTED BY
JOHN A. BERGEN — C31069 LICENSE NO. — 02/16/04 DATE
STEVE J. HYLAND — C23892 LICENSE NO. — 02/16/04 DATE

LOS OSOS COMMUNITY SERVICES DISTRICT

MWH Walnut Creek, California

eda design professionals
civil engineers • land surveyors • land planners
1998 santa barbara st • san luis obispo, ca 93401
ph: 805/549-8658 • email: eda@edainc.com

LOS OSOS WASTEWATER PROJECT
PLAN AND PROFILE
GARDEN STREET
STA 0+74.53 TO STA 5+10.00

SHEET
B-PP-141

K:\22650000\base\EDA-Work\PP-SHEETS - 100% Submittal\41 - Garden Street.dwg 2/05/04 09:21 AM shawnag JOB NO. 1481166

MATCH POINT MH-LU-A07 – SEE SHEET B-PP-148 FOR CONTINUATION

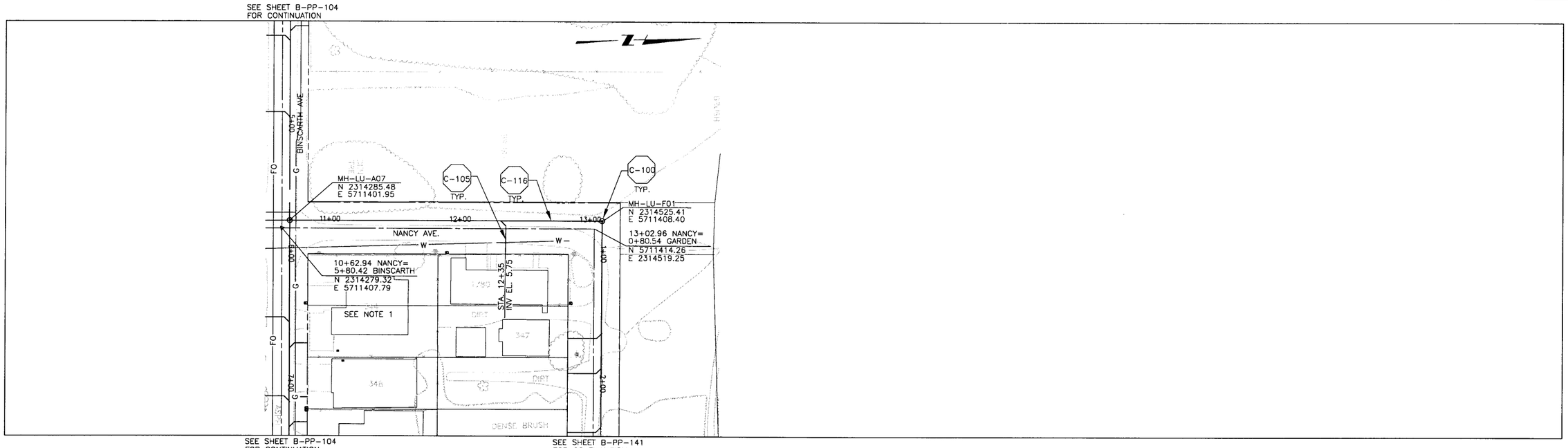

PLAN ON NANCY AVENUE

MATCH POINT MH-LU-A07 – SEE SHEET B-PP-148 FOR CONTINUATION

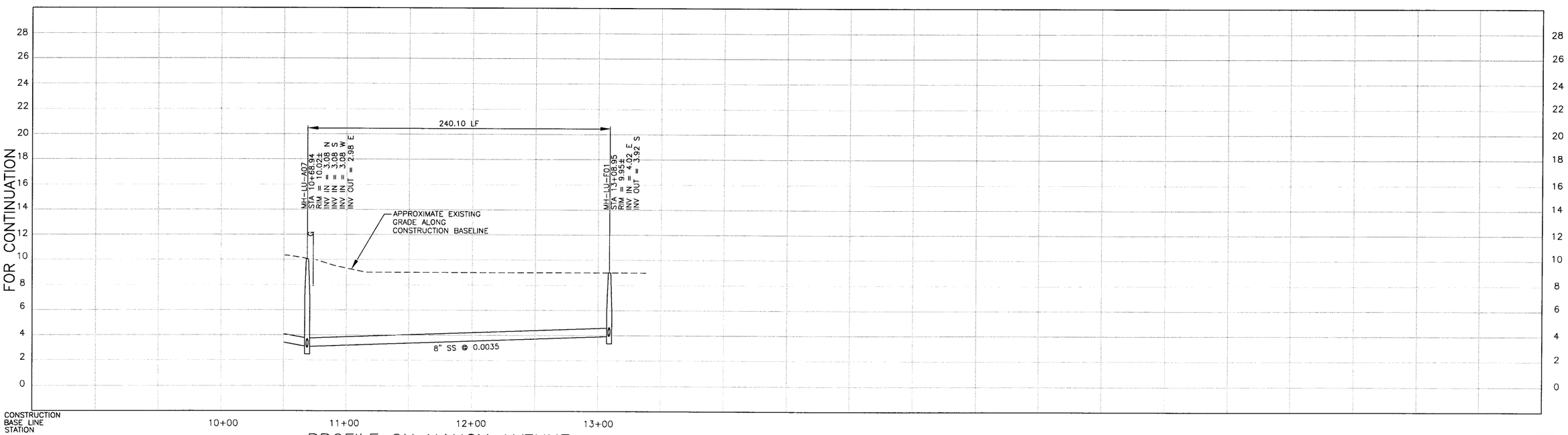

PROFILE ON NANCY AVENUE

NOTES:

1. 344 NANCY AVE SERVED ON BINSCARTH AVE
2.
3.

DIGALERT
DIAL TOLL FREE
1-800-642-2444
AT LEAST TWO DAYS BEFORE YOU DIG
UNDERGROUND SERVICE ALERT OF NORTHERN CALIFORNIA

REGISTERED PROFESSIONAL ENGINEER JEFFREY J. EMRICK No. 40,657 Expires 3/07 CIVIL STATE OF CALIFORNIA

REV	DATE	BY	DESCRIPTION

SCALE: HORZ: 1"=40' VERT: 1"= 4'

WARNING: 0 1/2 1 — IF THIS BAR DOES NOT MEASURE 1" THEN DRAWING IS NOT TO SCALE

DESIGNED SH/GH
DRAWN KS/JM/AF/BF
CHECKED SH

SUBMITTED BY
JOHN A. BERGEN — C31069 LICENSE NO. — 02/16/04 DATE
STEVEN J. HYLAND — C23892 LICENSE NO. — 02/16/04 DATE

LOS OSOS COMMUNITY SERVICES DISTRICT

MWH Walnut Creek, California

eda design professionals — civil engineers • land surveyors • land planners — 1998 santa barbara st. • san luis obispo, ca 93401 — ph: 805/549-8658 • email: eda@edainc.com

LOS OSOS WASTEWATER PROJECT
PLAN AND PROFILE
NANCY AVENUE
STA 10+68.94 TO STA 13+08.95

SHEET B-PP-142

JOB NO. 1481166

K:\2650000\base\EDA-Work\PP-SHEETS - 100% Submittal\42 - Nancy.dwg 2/05/04 09:21 AM shawnsg

MATCH POINT MH-LU-G01 – SEE SHEET B-PP-144
FOR CONTINUATION

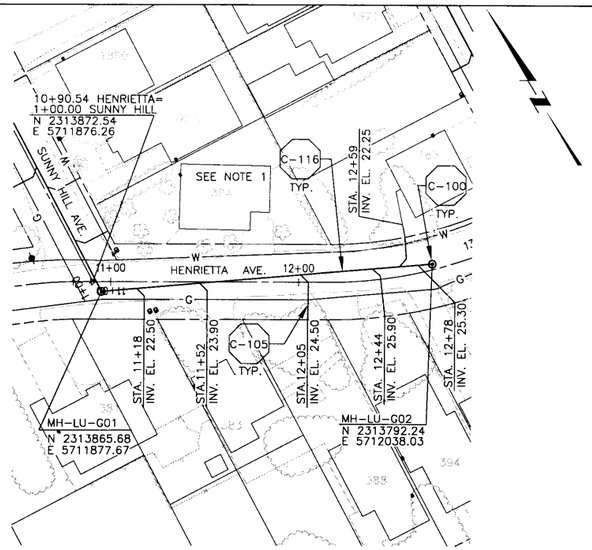

PLAN ON HENRIETTA AVENUE

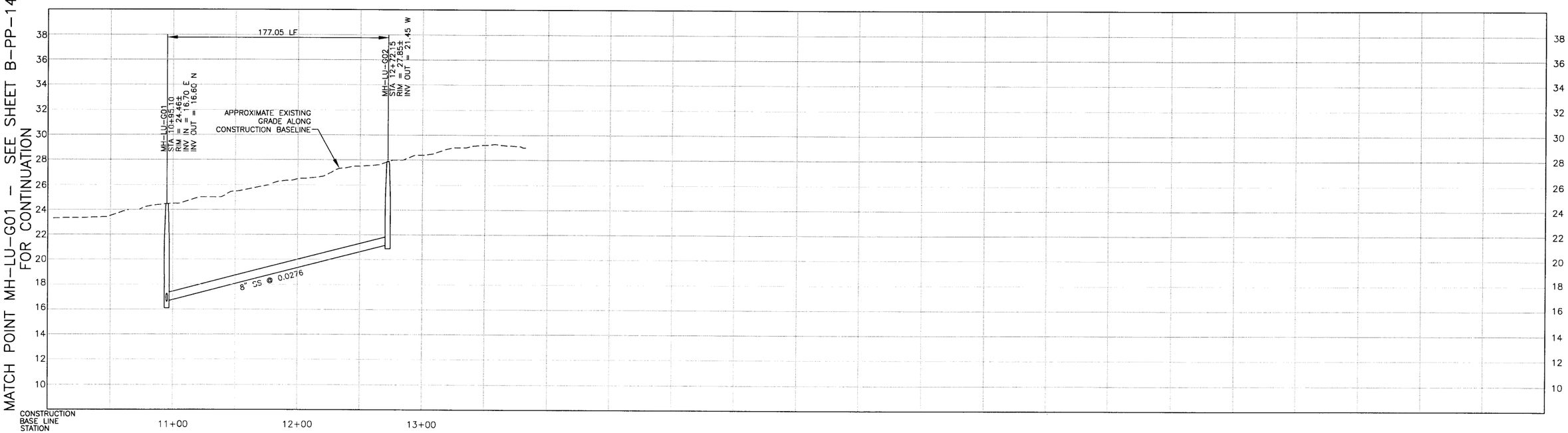

PROFILE ON HENRIETTA AVENUE

NOTES:

1. 384 HENRIETTA AVE SERVED ON SUNNY HILL AVE
2.
3.

DIGALERT
DIAL TOLL FREE
1-800-642-2444
AT LEAST TWO DAYS BEFORE YOU DIG
UNDERGROUND SERVICE ALERT OF NORTHERN CALIFORNIA

REGISTERED PROFESSIONAL ENGINEER
JEFFREY J. EMRICK
Lic. No. 48,657
Expires 3/07
CIVIL
STATE OF CALIFORNIA

REV	DATE	BY	DESCRIPTION

SCALE
HORZ: 1"=40'
VERT: 1"= 4'

WARNING
0 1/2 1
IF THIS BAR DOES NOT MEASURE 1" THEN DRAWING IS NOT TO SCALE

DESIGNED SH/GH
DRAWN KS/JM/AF/BF
CHECKED SH

SUBMITTED BY
JOHN A. BERGEN — C31069 LICENSE NO. — 02/16/04 DATE
STEVEN J. HYLAND — C23892 LICENSE NO. — 02/16/04 DATE

LOS OSOS COMMUNITY SERVICES DISTRICT

MWH Walnut Creek, California

eda design professionals
civil engineers • land surveyors • land planners
1998 santa barbara st • san luis obispo, ca 93401
ph: 805/549-8658 • email: eda@edainc.com

LOS OSOS WASTEWATER PROJECT
PLAN AND PROFILE
HENRIETTA AVENUE
STA 10+95.10 TO STA 12+72.15

SHEET
B-PP-143

MATCH POINT MH-LU-G01 – SEE SHEET B-PP-144
FOR CONTINUATION

K:\2365000\base\EDA-Work\PP-SHEETS - 100% Submittal\143 - Henrietta.dwg 2/05/04 09:22 AM shawnag JOB NO. 1481166

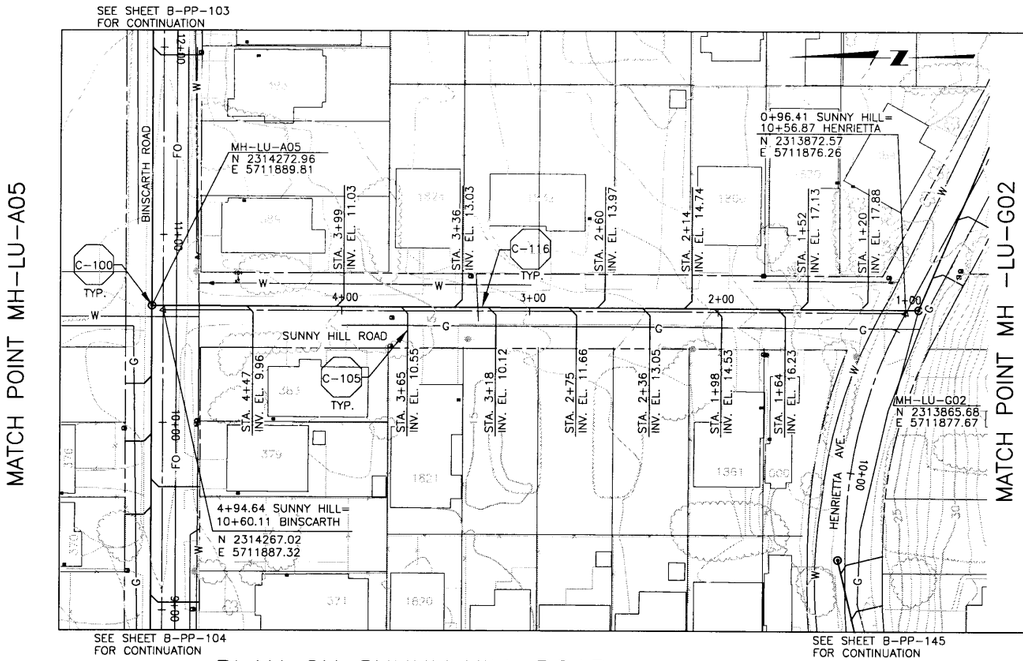

PLAN ON SUNNY HILL ROAD

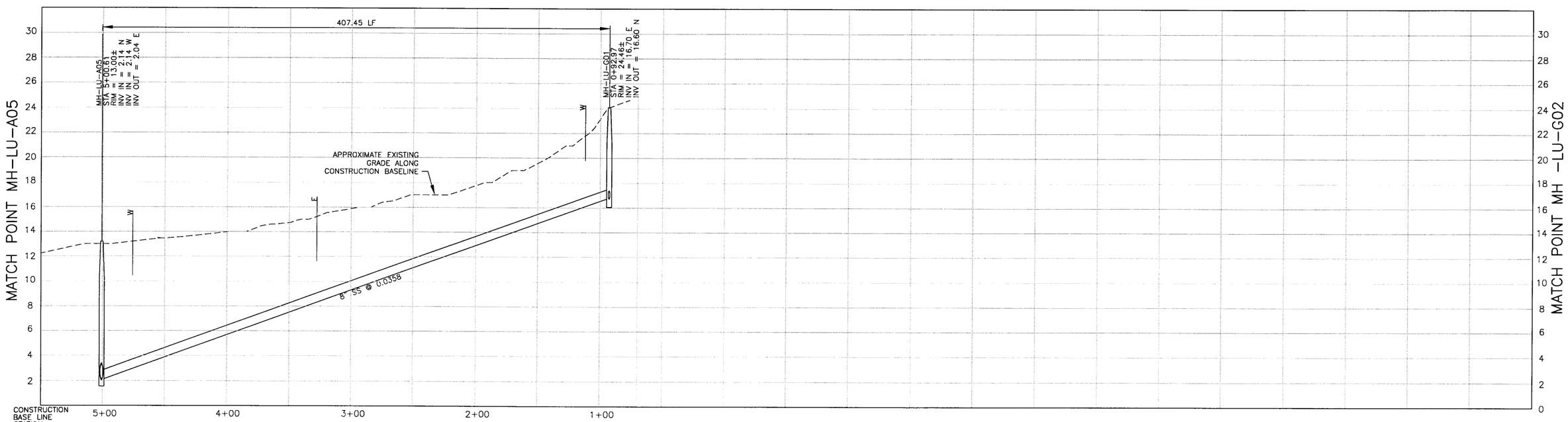

PROFILE ON SUNNY HILL ROAD

NOTES:

1.
2.
3.

DIGALERT
DIAL TOLL FREE
1-800-642-2444
AT LEAST TWO DAYS BEFORE YOU DIG
UNDERGROUND SERVICE ALERT OF NORTHERN CALIFORNIA

REGISTERED PROFESSIONAL ENGINEER
JEFFREY J. ERICK
Lic. No. 40,657
Expires 3/07
CIVIL
STATE OF CALIFORNIA

REV	DATE	BY	DESCRIPTION

SCALE
HORZ: 1"=40'
VERT: 1"= 4'

WARNING
0 1/2 1
IF THIS BAR DOES NOT MEASURE 1" THEN DRAWING IS NOT TO SCALE

DESIGNED SH/GH
DRAWN KS/JM/AF/BF
CHECKED SH

SUBMITTED BY
JOHN A. BERGEN — C31069 LICENSE NO. — 02/16/04 DATE
STEVE J. HYLAND — C23892 LICENSE NO. — 02/16/04 DATE

LOS OSOS
COMMUNITY SERVICES DISTRICT

MWH
Walnut Creek, California

eda design professionals
civil engineers • land surveyors • land planners
1998 santa barbara st • san luis obispo, ca 93401
ph: 805/549-8658 • email: eda@edainc.com

LOS OSOS WASTEWATER PROJECT
PLAN AND PROFILE
SUNNY HILL ROAD
STA 0+92.97 TO STA 5+00.61

SHEET
B-PP-144

K:\22650000\base\EDA-Work\PP-SHEETS - 100% Submittal\44 - SunnyHill.dwg 2/05/04 09:23 AM shawnag JOB NO. 1481166

MATCH POINT MH-LU-H01-SEE SHEET B-PP-147
FOR CONTINUATION

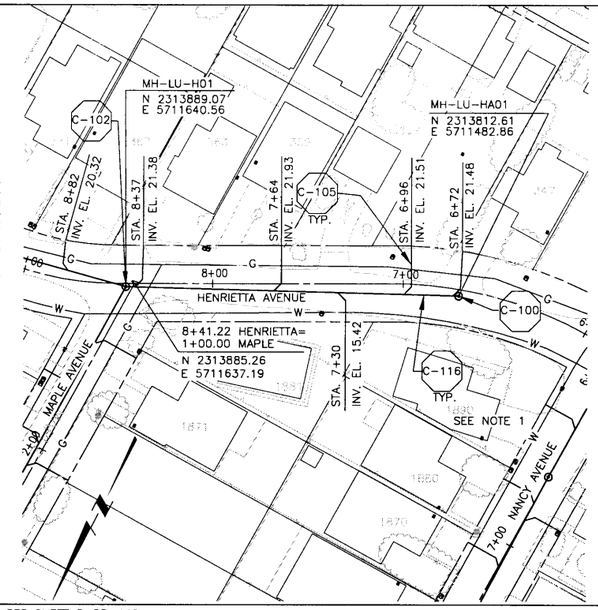

SEE SHEET B-PP-146
FOR CONTINUATION

SEE SHEET B-PP-148
FOR CONTINUATION

PLAN ON HENRIETTA AVENUE

MATCH POINT MH-LU-H01 - SEE SHEET B-PP-147
FOR CONTINUATION

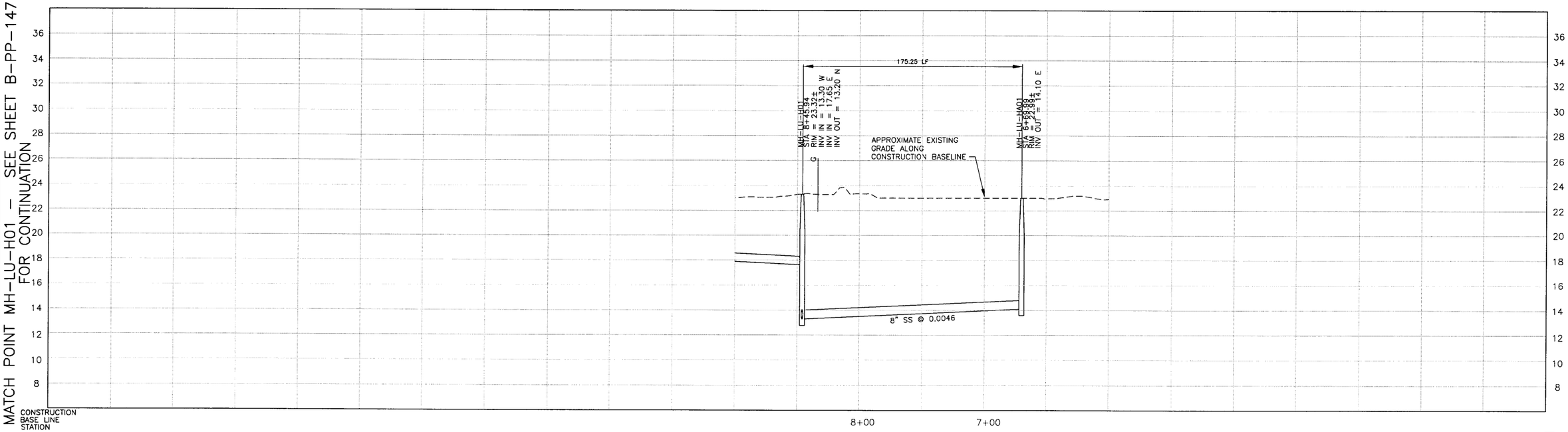

PROFILE ON HENRIETTA AVENUE

NOTES:

1. 1890 HENRIETTA AVE SERVED ON NANCY AVE
2.
3.

DIGALERT
DIAL TOLL FREE
1-800-642-2444
AT LEAST TWO DAYS BEFORE YOU DIG
UNDERGROUND SERVICE ALERT OF NORTHERN CALIFORNIA

REGISTERED PROFESSIONAL ENGINEER
JEFFREY J. EMROD
Lic. No. 40,657
Expires 3/07
STATE OF CALIFORNIA

REV	DATE	BY	DESCRIPTION

SCALE
HORZ: 1"=40'
VERT: 1"= 4'

WARNING
0 1/2 1
IF THIS BAR DOES NOT MEASURE 1" THEN DRAWING IS NOT TO SCALE

DESIGNED SH/GH
DRAWN KS/JM/AF/BF
CHECKED SH

SUBMITTED BY
JOHN A. BERGEN — C31069 — LICENSE NO. — 02/16/04 — DATE
STEVE J. HYLAND — C23892 — LICENSE NO. — 02/16/04 — DATE

LOS OSOS
COMMUNITY SERVICES DISTRICT

MWH
Walnut Creek, California

eda design professionals
civil engineers • land surveyors • land planners
1998 santa barbara st • san luis obispo, ca 93401
ph: 805/549-8658 • email: eda@edainc.com

LOS OSOS WASTEWATER PROJECT
PLAN AND PROFILE
HENRIETTA AVENUE
STA 6+69.99 TO STA 8+45.94

SHEET
B-PP-145

K:\2350000\bak\EDA-Work\PP-SHEETS - 100% Submittal\45 - Henrietta.dwg 2/05/04 09:25 AM shawong JOB NO. 1481166

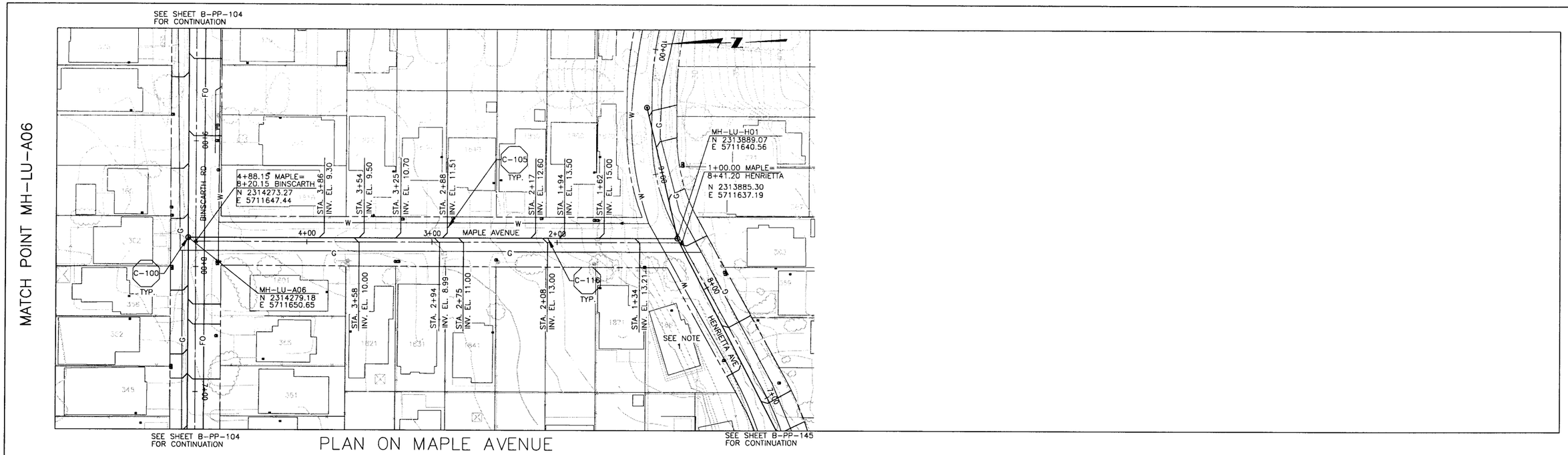

PLAN ON MAPLE AVENUE

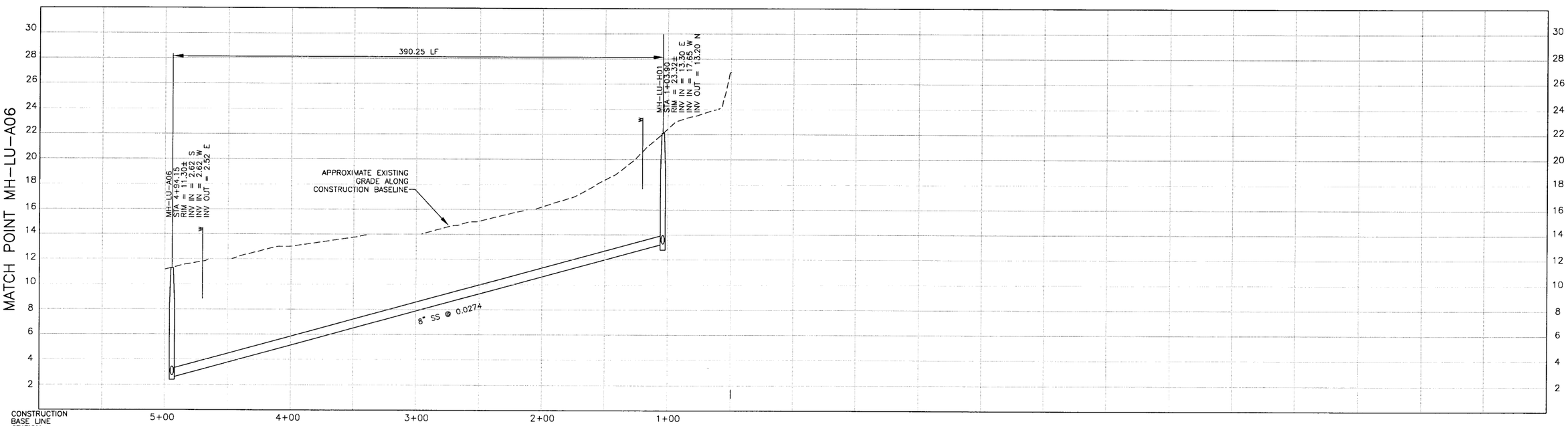

PROFILE ON MAPLE AVENUE

NOTES:

1. 1881 MAPLE AVE SERVED ON HENRIETTA AVE
2.
3.

DIGALERT
DIAL TOLL FREE 1-800-642-2444
AT LEAST TWO DAYS BEFORE YOU DIG
UNDERGROUND SERVICE ALERT OF NORTHERN CALIFORNIA

REGISTERED PROFESSIONAL ENGINEER JEFFREY J. EMRICK Lic. No. 40,657 Expires 3/07 CIVIL STATE OF CALIFORNIA

REV	DATE	BY	DESCRIPTION

SCALE
HORZ: 1"=40'
VERT: 1"= 4'

WARNING
0 1/2 1
IF THIS BAR DOES NOT MEASURE 1" THEN DRAWING IS NOT TO SCALE

DESIGNED SH/GH
DRAWN KS/JM/AF/BF
CHECKED SH

SUBMITTED BY
JOHN A. BERGEN — C31069 LICENSE NO. — 02/16/04 DATE
STEVE J. HYLAND — C23892 LICENSE NO. — 02/16/04 DATE

LOS OSOS COMMUNITY SERVICES DISTRICT

MWH Walnut Creek, California

eda design professionals
civil engineers • land surveyors • land planners
1998 santa barbara st • san luis obispo, ca 93401
ph: 805/549-8658 • email: eda@edainc.com

LOS OSOS WASTEWATER PROJECT
PLAN AND PROFILE
MAPLE AVENUE
STA 1+03.90 TO STA 4+94.15

SHEET
B-PP-146

K:\22650000\base\EDA-Work\PP-SHEETS - 100% Submittal\46 - Maple.dwg 2/05/04 09:26 AM shawnag JOB NO. 1481166

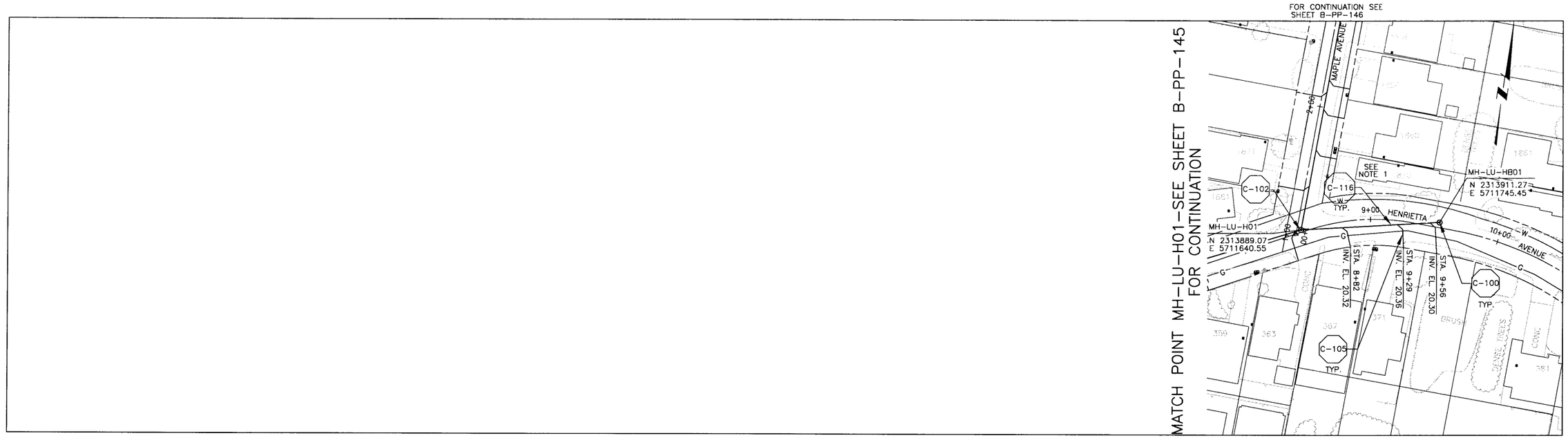

PLAN ON HENRIETTA AVENUE

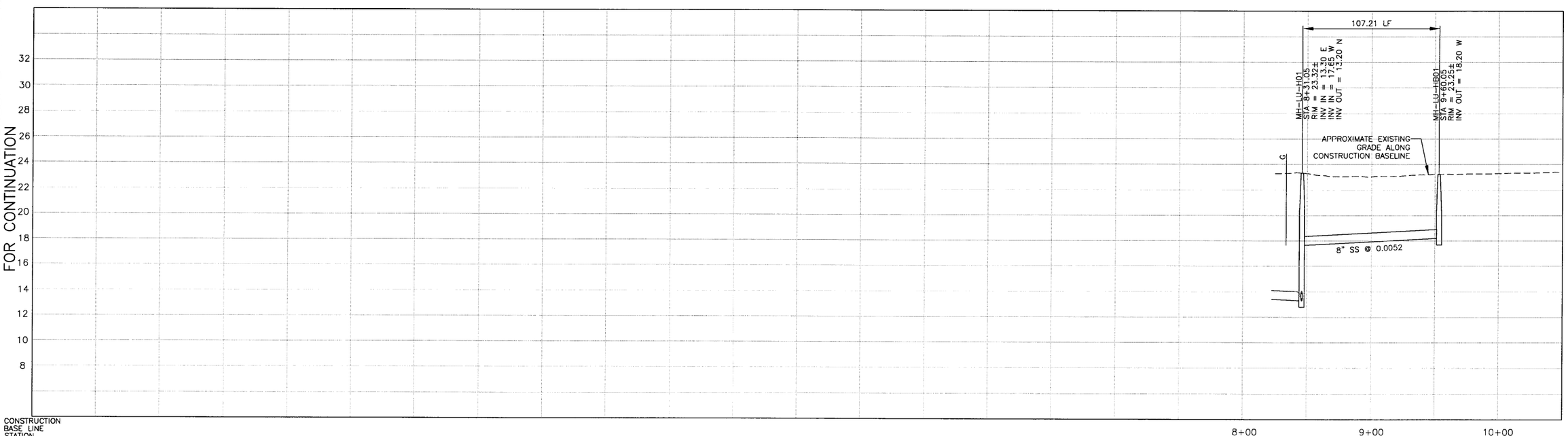

PROFILE ON HENRIETTA AVENUE

NOTES:

1. 1870 HENRIETTA AVE SERVED ON MAPLE AVE
2.
3.

DIGALERT
DIAL TOLL FREE
1-800-642-2444
AT LEAST TWO DAYS BEFORE YOU DIG
UNDERGROUND SERVICE ALERT OF NORTHERN CALIFORNIA

REGISTERED PROFESSIONAL ENGINEER
JEFFREY J. SMITH
Lic. No. 40,657
Expires 3/07
STATE OF CALIFORNIA

REV	DATE	BY	DESCRIPTION

SCALE
HORZ: 1"=40'
VERT: 1"= 4'

WARNING
0 1/2 1
IF THIS BAR DOES NOT MEASURE 1" THEN DRAWING IS NOT TO SCALE

DESIGNED SH/GH
DRAWN KS/JM/AF/BF
CHECKED SH

SUBMITTED BY
JOHN A. BERGEN — C31069 LICENSE NO. — 02/16/04 DATE
STEVE J. HYLAND — C23892 LICENSE NO. — 02/16/04 DATE

LOS OSOS COMMUNITY SERVICES DISTRICT

MWH Walnut Creek, California

eda design professionals
civil engineers • land surveyors • land planners
1998 santa barbara st • san luis obispo, ca 93401
ph: 805/549-8658 • email: eda@edainc.com

LOS OSOS WASTEWATER PROJECT
PLAN AND PROFILE
HENRIETTA AVENUE
STA 8+31.05 TO STA 9+60.05

SHEET
B-PP-147

JOB NO. 1481166
K:\22650000\base\EDA-Work\PP-SHEETS - 100% Submittal\47 - Henrietta.dwg 2/05/04 09:26 AM shawnag

MATCH POINT MH-LU-A07 – SEE SHEET B-PP-142
FOR CONTINUATION

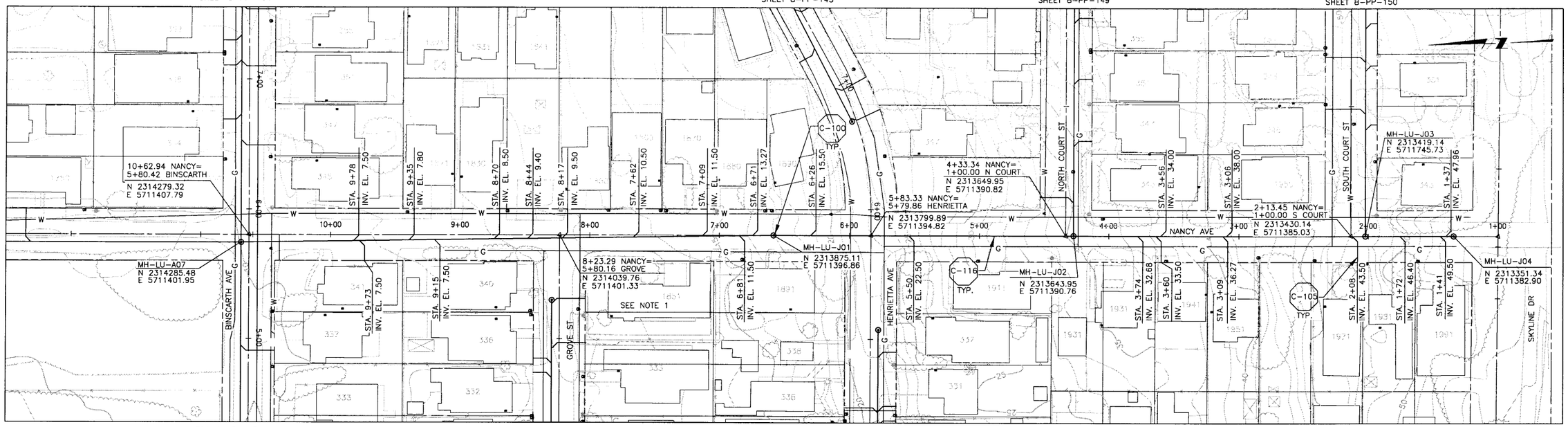

PLAN ON NANCY AVENUE

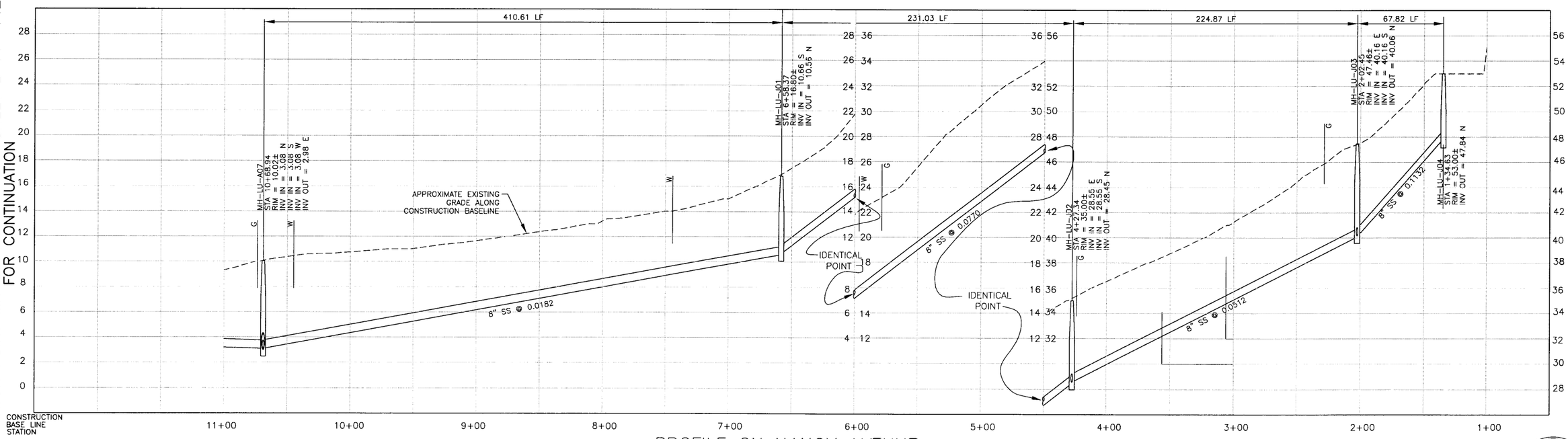

PROFILE ON NANCY AVENUE

NOTES:

1. 1851 NANCY AVE SERVED ON GROVE ST.
2.
3.

DIGALERT
DIAL TOLL FREE
1-800-642-2444
AT LEAST TWO DAYS BEFORE YOU DIG
UNDERGROUND SERVICE ALERT OF NORTHERN CALIFORNIA

REGISTERED PROFESSIONAL ENGINEER
Lic. No. 40,657
Expires 3/04
STATE OF CALIFORNIA

REV	DATE	BY	DESCRIPTION

SCALE
HORZ: 1"=40'
VERT: 1"= 4'

WARNING
0 1/2 1
IF THIS BAR DOES NOT MEASURE 1" THEN DRAWING IS NOT TO SCALE

DESIGNED SH/GH
DRAWN KS/JM/AF/BF
CHECKED SH

SUBMITTED BY
JOHN A. BERGEN — C31069 — LICENSE NO. — 02/16/04 — DATE
STEVE J. HYLAND — C23892 — LICENSE NO. — 02/16/04 — DATE

LOS OSOS
COMMUNITY SERVICES DISTRICT

MWH
Walnut Creek, California

eda design professionals
civil engineers • land surveyors • land planners
1998 santa barbara st • san luis obispo, ca 93401
ph: 805/549-8658 • email: eda@edainc.com

LOS OSOS WASTEWATER PROJECT
PLAN AND PROFILE
NANCY AVENUE
STA 1+34.63 TO STA 10+68.94

SHEET
B-PP-148

MATCH POINT MH-LU-A07 – SEE SHEET B-PP-142
FOR CONTINUATION

K:\2850000\base\EDA-Work\PP-SHEETS - 100% Submittal\48 - Nancy.dwg 2/05/04 09:27 AM shawndg JOB NO. 1481166

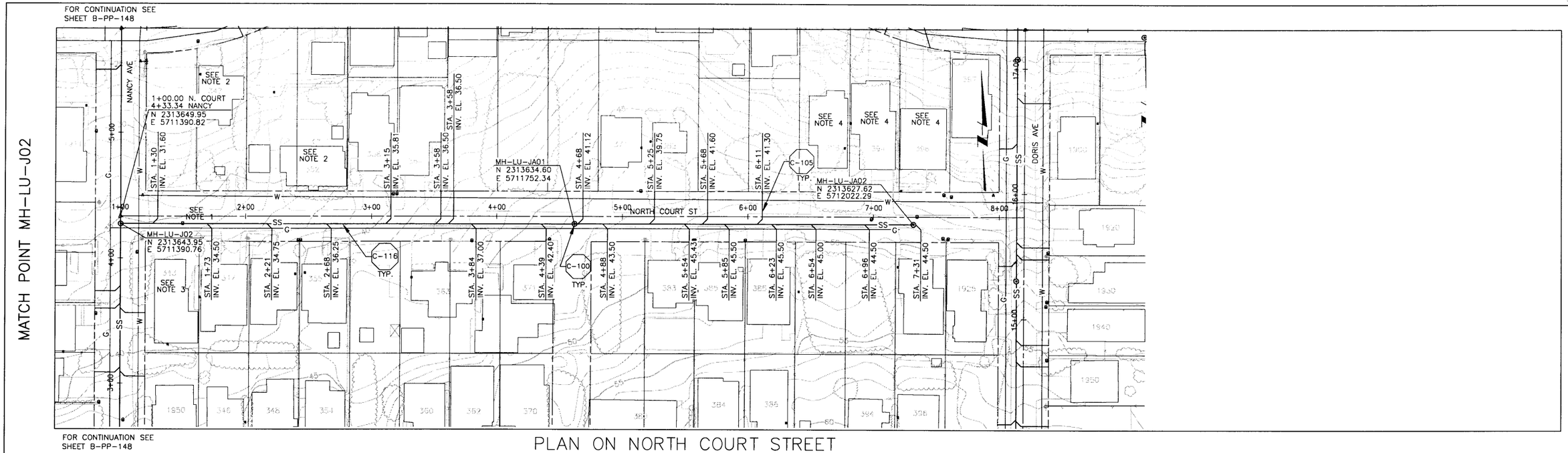

PLAN ON NORTH COURT STREET

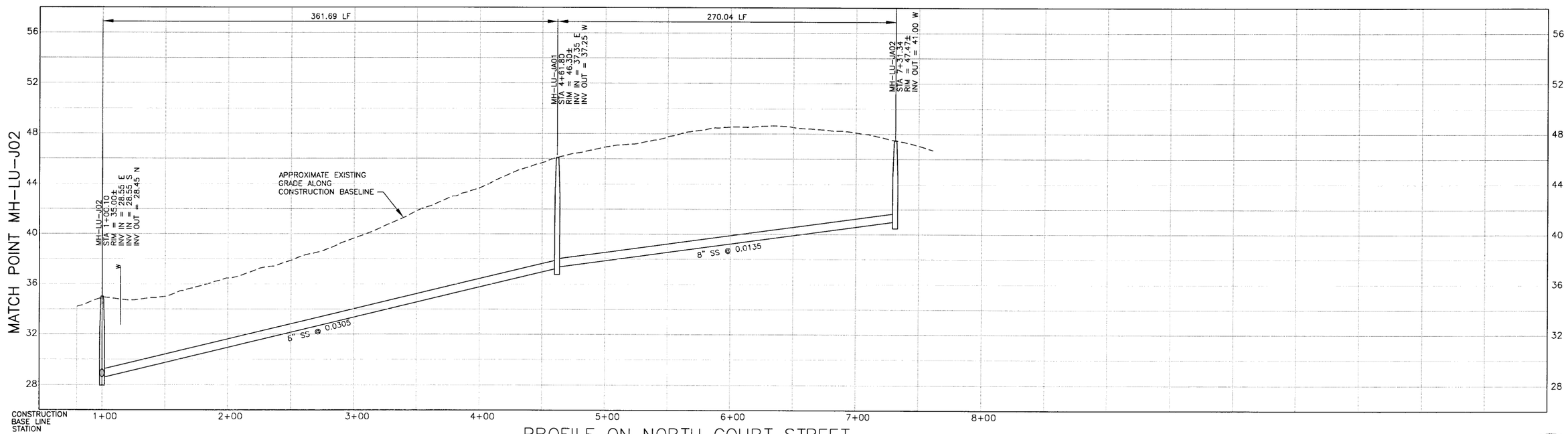

PROFILE ON NORTH COURT STREET

NOTES:

1. RELOCATE WATER METER IN CONFORMANCE WITH THE WATER PURVEYOR
2. SEWER LATERAL FOR 347 AND 352 NORTH COURT ST. ARE CONNECTED ON HENRIETTA AVE
3. 343 NORTH COURT SERVED ON NANCY AVE
4. 388, 394 AND 398 NORTH COURT ARE CONNECTED ON HENRIETTA AVE

DIGALERT
DIAL TOLL FREE
1-800-642-2444
AT LEAST TWO DAYS BEFORE YOU DIG
UNDERGROUND SERVICE ALERT OF NORTHERN CALIFORNIA

REGISTERED PROFESSIONAL ENGINEER JEFFREY J. ENRICK Lic. No. 40,657 Expires 3/07 CIVIL STATE OF CALIFORNIA

REV	DATE	BY	DESCRIPTION

SCALE: HORZ: 1"=40' VERT: 1"= 4'

WARNING: 0 1/2 1 — IF THIS BAR DOES NOT MEASURE 1" THEN DRAWING IS NOT TO SCALE

DESIGNED SH/GH
DRAWN KS/JM/AF/BF
CHECKED SH

SUBMITTED BY
JOHN A. BERGEN — C31069 LICENSE NO. — 02/16/04 DATE
STEVE J. HYLAND — C23892 LICENSE NO. — 02/16/04 DATE

LOS OSOS COMMUNITY SERVICES DISTRICT

MWH Walnut Creek, California

eda design professionals — civil engineers • land surveyors • land planners — 1998 santa barbara st • san luis obispo, ca 93401 — ph: 805/549-8658 • email: eda@edainc.com

LOS OSOS WASTEWATER PROJECT
PLAN AND PROFILE
NORTH COURT STREET
STA 1+00.10 TO STA 7+31.34

SHEET B-PP-149

K:\22650000\base\EDA-Work\PP-SHEETS - 100% Submittal\49 - NCourt.dwg 2/05/04 09:28 AM shawnag JOB NO. 1481166

MATCH POINT MH-LU-J03

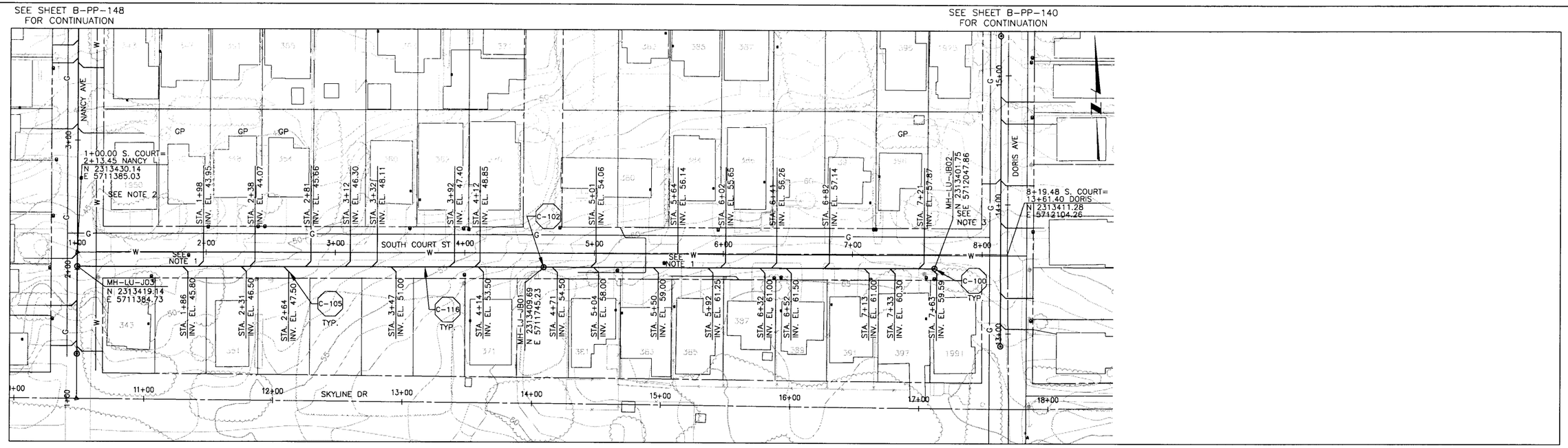

PLAN ON SOUTH COURT STREET

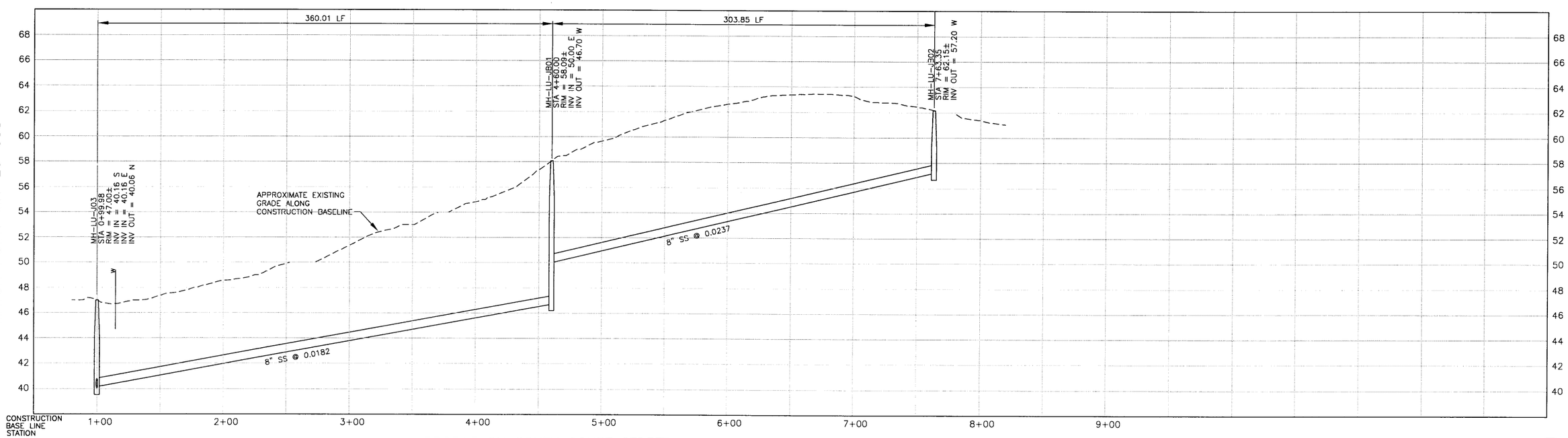

PROFILE ON SOUTH COURT STREET

NOTES:

1. RELOCATE WATER METER IN CONFORMANCE WITH THE REQUIREMENTS OF THE WATER PURVEYOR
2. 1950 SOUTH COURT SERVED ON NANCY AVE
3. LOT SERVED ON DORIS AVE

DIGALERT
DIAL TOLL FREE
1-800-642-2444
AT LEAST TWO DAYS BEFORE YOU DIG
UNDERGROUND SERVICE ALERT OF NORTHERN CALIFORNIA

REGISTERED PROFESSIONAL ENGINEER
JEFFREY J. EMRICH
No. 40,657
Exp. 3/07
CIVIL
STATE OF CALIFORNIA

REV	DATE	BY	DESCRIPTION

SCALE
HORZ: 1"=40'
VERT: 1"= 4'

WARNING
0 1/2 1
IF THIS BAR DOES NOT MEASURE 1" THEN DRAWING IS NOT TO SCALE

DESIGNED SH/GH
DRAWN KS/JM/AF/BF
CHECKED SH

SUBMITTED BY
JOHN A. BERGEN — C31069 — LICENSE NO. — 02/16/04 — DATE
STEVE J. HYLAND — C23892 — LICENSE NO. — 02/16/04 — DATE

LOS OSOS
COMMUNITY SERVICES DISTRICT

MWH
Walnut Creek, California

eda design professionals
civil engineers • land surveyors • land planners
1998 santa barbara st • san luis obispo, ca 93401
ph: 805/549-8658 • email: eda@edainc.com

LOS OSOS WASTEWATER PROJECT
PLAN AND PROFILE
SOUTH COURT STREET
STA 0+99.98 TO STA 7+63.35

SHEET
B-PP-150

K:\2250000\base\EDA-Work\PP-SHEETS - 100% Submittal\50 - SCourt.dwg 2/05/04 09:28 AM shoang JOB NO. 1481166

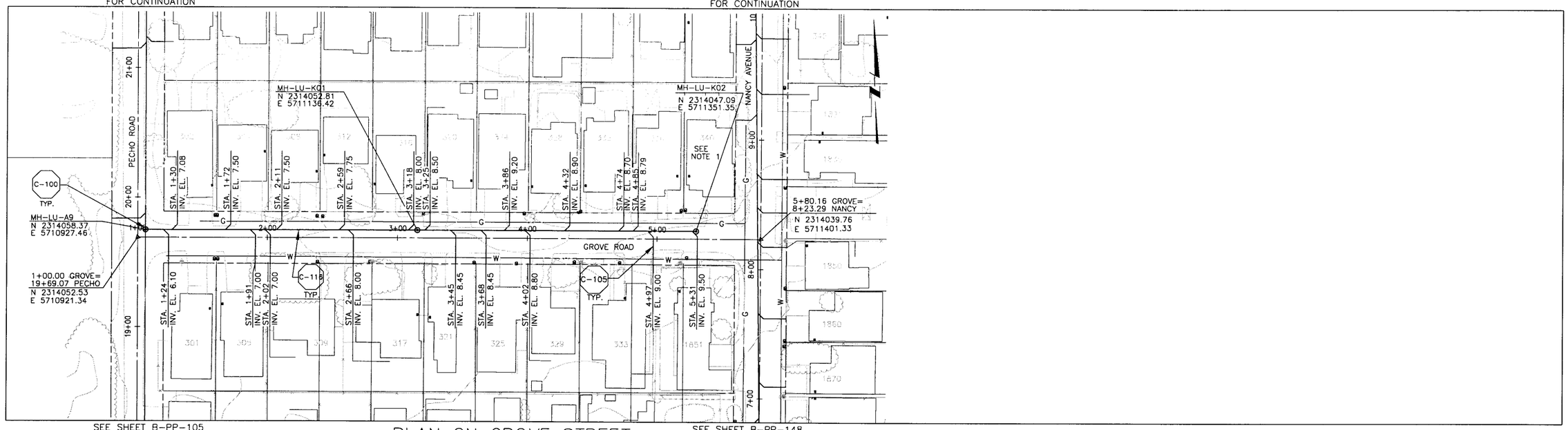

PLAN ON GROVE STREET

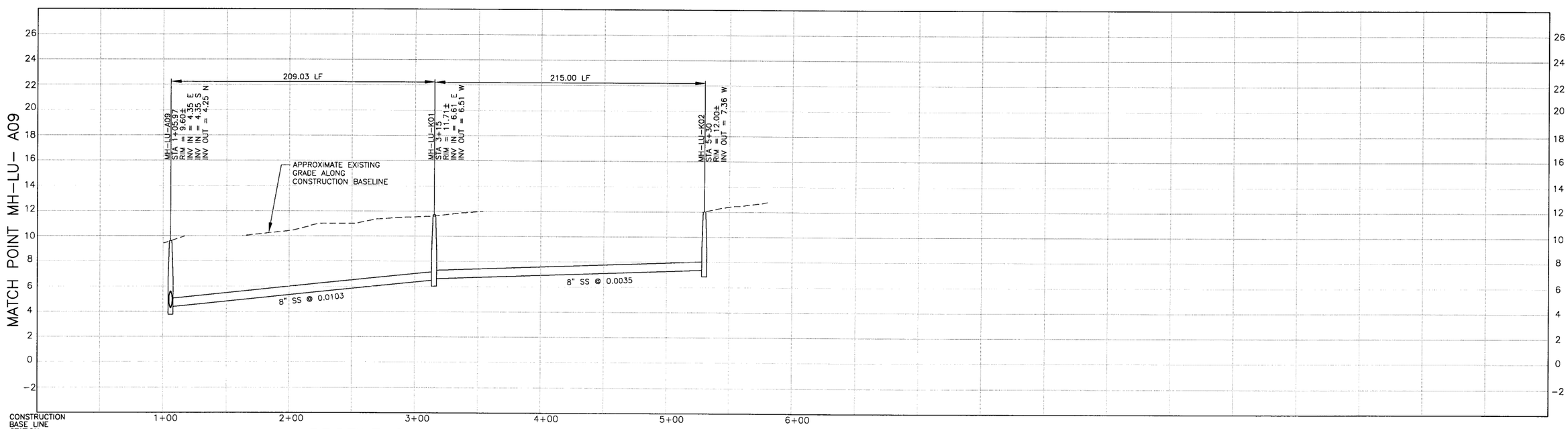

PROFILE ON GROVE STREET

NOTES:

1. 340 GROVE ST. SERVED ON NANCY AVE
2.
3.

DIGALERT
DIAL TOLL FREE
1-800-642-2444
AT LEAST TWO DAYS BEFORE YOU DIG
UNDERGROUND SERVICE ALERT OF NORTHERN CALIFORNIA

REGISTERED PROFESSIONAL ENGINEER JEFFREY J. EMRICK Lic. No. 40,657 Expires 3/07 STATE OF CALIFORNIA

REV	DATE	BY	DESCRIPTION

SCALE
HORZ: 1"=40'
VERT: 1"= 4'

WARNING
0 1/2 1
IF THIS BAR DOES NOT MEASURE 1" THEN DRAWING IS NOT TO SCALE

DESIGNED SH/GH
DRAWN KS/JM/AF/BF
CHECKED SH

SUBMITTED BY
JOHN A. BERGEN — C31069 LICENSE NO. — 02/16/04 DATE
STEVE J. HYLAND — C23892 LICENSE NO. — 02/16/04 DATE

LOS OSOS COMMUNITY SERVICES DISTRICT

MWH Walnut Creek, California

eda design professionals
civil engineers • land surveyors • land planners
1998 santa barbara st • san luis obispo, ca 93401
ph: 805/549-8658 • email: eda@edainc.com

LOS OSOS WASTEWATER PROJECT
PLAN AND PROFILE
GROVE STREET
STA 1+05.97 TO STA 5+30.00

SHEET
B-PP-151

JOB NO. 1481166

K:\22650000\base\EDA-Work\PP-SHEETS - 100% Submittal\51 - Grove.dwg 2/05/04 09:29 AM shawnag

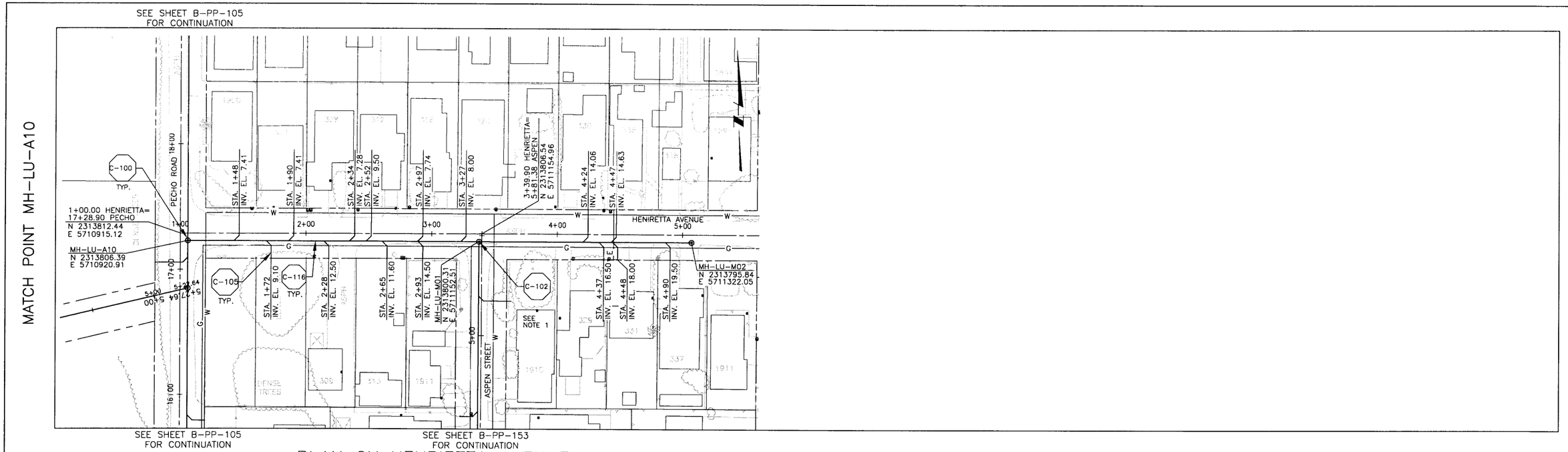

PLAN ON HENRIETTA AVENUE

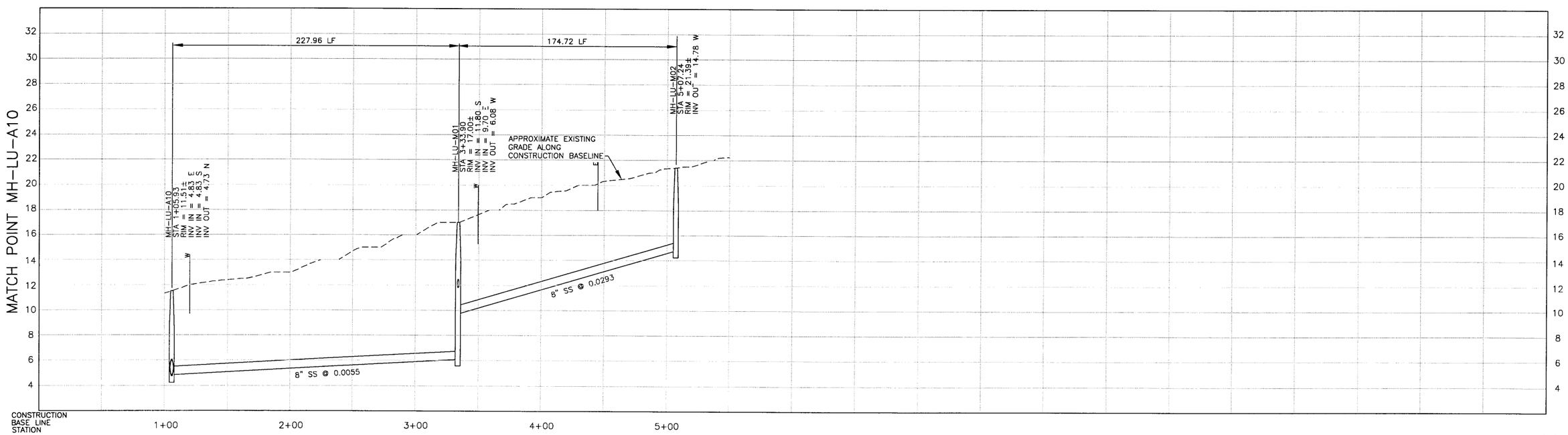

PROFILE ON HENRIETTA AVENUE

NOTES:

1. 1910 HENRIETTA AVE SERVED ON ASPEN ST.
2.
3.

DIGALERT
DIAL TOLL FREE
1-800-642-2444
AT LEAST TWO DAYS BEFORE YOU DIG
UNDERGROUND SERVICE ALERT OF NORTHERN CALIFORNIA

REGISTERED PROFESSIONAL ENGINEER
JEFFREY J. EMRICK
Lic. No. 40,667
Expires 3/07
CIVIL
STATE OF CALIFORNIA

REV	DATE	BY	DESCRIPTION

SCALE
HORZ: 1"=40'
VERT: 1"= 4'

WARNING
0 1/2 1
IF THIS BAR DOES NOT MEASURE 1" THEN DRAWING IS NOT TO SCALE

DESIGNED SH/GH
DRAWN KS/JM/AF/BF
CHECKED SH

SUBMITTED BY
JOHN A. BERGEN — C31069 LICENSE NO. — 02/16/04 DATE
STEVE J. HYLAND — C23892 LICENSE NO. — 02/16/04 DATE

LOS OSOS
COMMUNITY SERVICES DISTRICT

MWH
Walnut Creek, California

eda design professionals
civil engineers • land surveyors • land planners
1998 santa barbara st • san luis obispo, ca 93401
ph: 805/549-8658 • email: eda@edainc.com

LOS OSOS WASTEWATER PROJECT
PLAN AND PROFILE
HENRIETTA AVENUE
STA 1+05.93 TO STA 5+07.24

SHEET
B-PP-152

K:\22650000\base\EDA-Work\PP-SHEETS - 100% Submittal\52 - Henrietta.dwg 2/05/04 09:30 AM shawnag JOB NO. 1481166

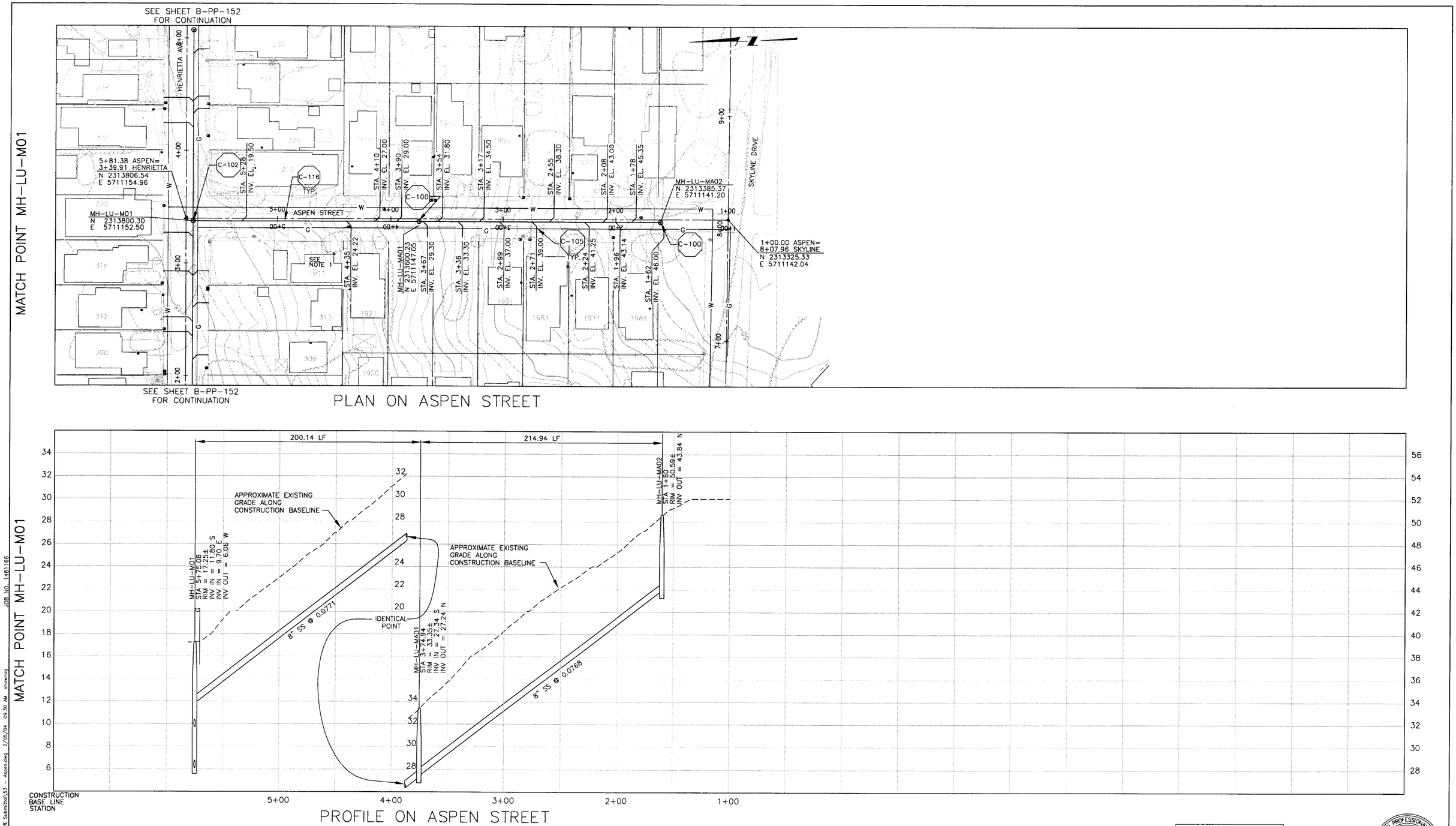

PLAN ON ASPEN STREET

PROFILE ON ASPEN STREET

NOTES:

1. 1911 ASPEN ST. SERVED ON HENRIETTA AVE
2.
3.

DIGALERT
DIAL TOLL FREE 1-800-642-2444
AT LEAST TWO DAYS BEFORE YOU DIG
UNDERGROUND SERVICE ALERT OF NORTHERN CALIFORNIA

REGISTERED PROFESSIONAL ENGINEER JEFFREY J. ENRICK Lic. No. 40,657 Expires 3/07 STATE OF CALIFORNIA

REV	DATE	BY	DESCRIPTION

SCALE: HORZ: 1"=40' VERT: 1"= 4'

WARNING: 0 1/2 1 — IF THIS BAR DOES NOT MEASURE 1" THEN DRAWING IS NOT TO SCALE

DESIGNED SH/GH
DRAWN KS/JM/AF/BF
CHECKED SH

SUBMITTED BY
John A. Bergen — C31069 LICENSE NO. — 02/16/04 DATE
Steven J. Hyland — C23892 LICENSE NO. — 02/16/04 DATE

LOS OSOS COMMUNITY SERVICES DISTRICT

MWH Walnut Creek, California

eda design professionals — civil engineers • land surveyors • land planners — 1998 santa barbara st • san luis obispo, ca 93401 — ph: 805/549-8658 • email: eda@edainc.com

LOS OSOS WASTEWATER PROJECT
PLAN AND PROFILE
ASPEN STREET
STA 1+60.00 TO STA 5+75.08

SHEET B-PP-153

K:\22650000\base\EDA-Work\PP-SHEETS - 100% Submittal\53 - Aspen.dwg 2/05/04 09:30 AM shawnag JOB NO. 1481166

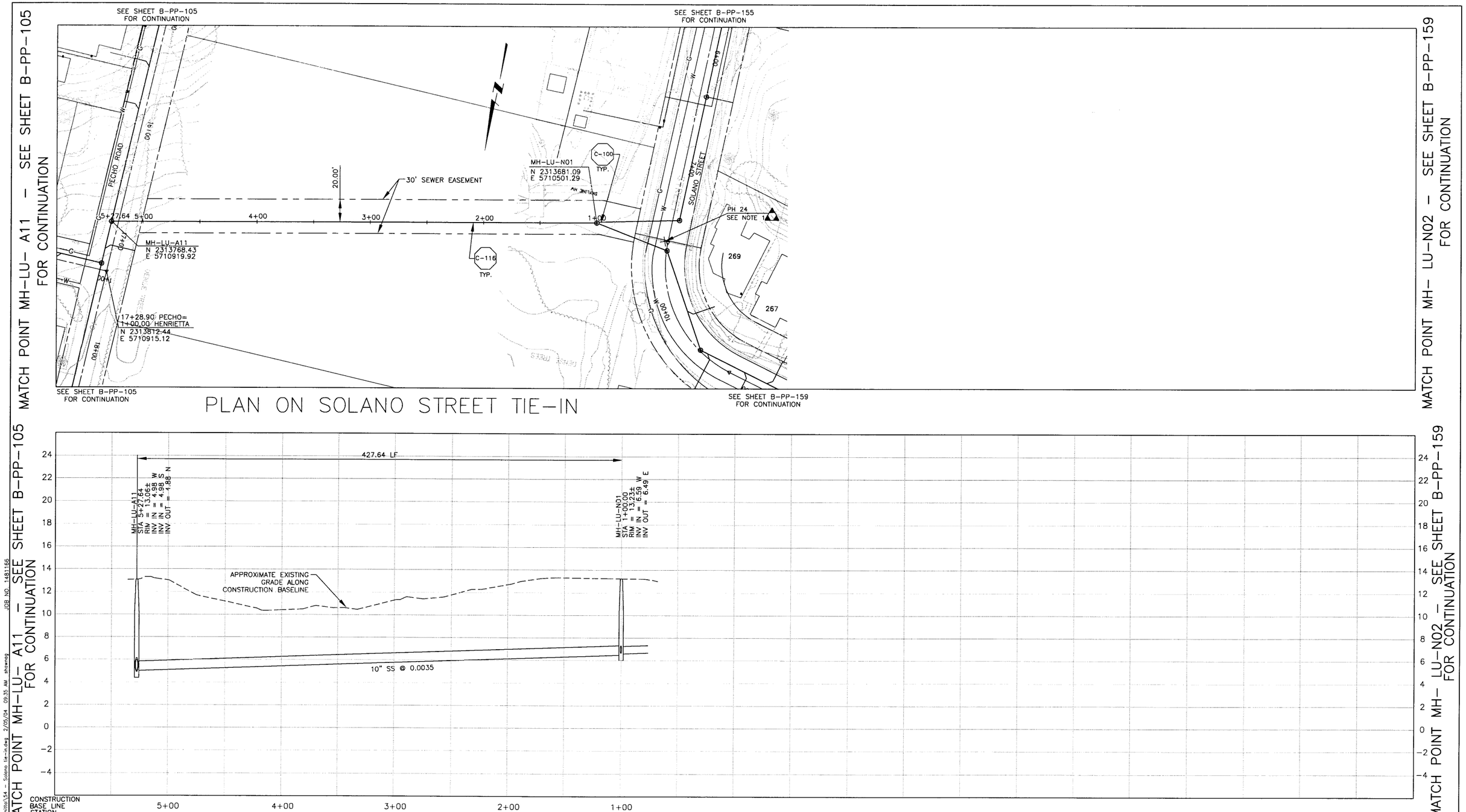

NOTES:

1. 4" WATERLINE
2.
3.

DIGALERT
DIAL TOLL FREE
1-800-642-2444
AT LEAST TWO DAYS BEFORE YOU DIG
UNDERGROUND SERVICE ALERT OF NORTHERN CALIFORNIA

REGISTERED PROFESSIONAL ENGINEER JEFFREY J. EMRICK Lic. No. 40657 Expires 3/07 STATE OF CALIFORNIA

REV	DATE	BY	DESCRIPTION

SCALE
HORZ: 1"=40'
VERT: 1"= 4'

WARNING
0 1/2 1
IF THIS BAR DOES NOT MEASURE 1" THEN DRAWING IS NOT TO SCALE

DESIGNED SH/GH
DRAWN KS/JM/AF/BF
CHECKED SH

SUBMITTED BY
JOHN A. BERGEN — C31069 LICENSE NO. — 02/16/04 DATE
STEVE J. HYLAND — C23892 LICENSE NO. — 02/16/04 DATE

LOS OSOS COMMUNITY SERVICES DISTRICT

MWH Walnut Creek, California

eda design professionals
civil engineers • land surveyors • land planners
1998 santa barbara st • san luis obispo, ca 93401
ph: 805/549-8658 • email: eda@edainc.com

LOS OSOS WASTEWATER PROJECT
PLAN AND PROFILE
SOLANO STREET TIE-IN
STA 1+00.00 TO STA 5+27.64

SHEET
B-PP-154

K:\22650000\base\EDA-Work\PP-SHEETS - 100% Submittal\54 - Solano tie-in.dwg 2/05/04 09:35 AM shawnag JOB NO. 1481166

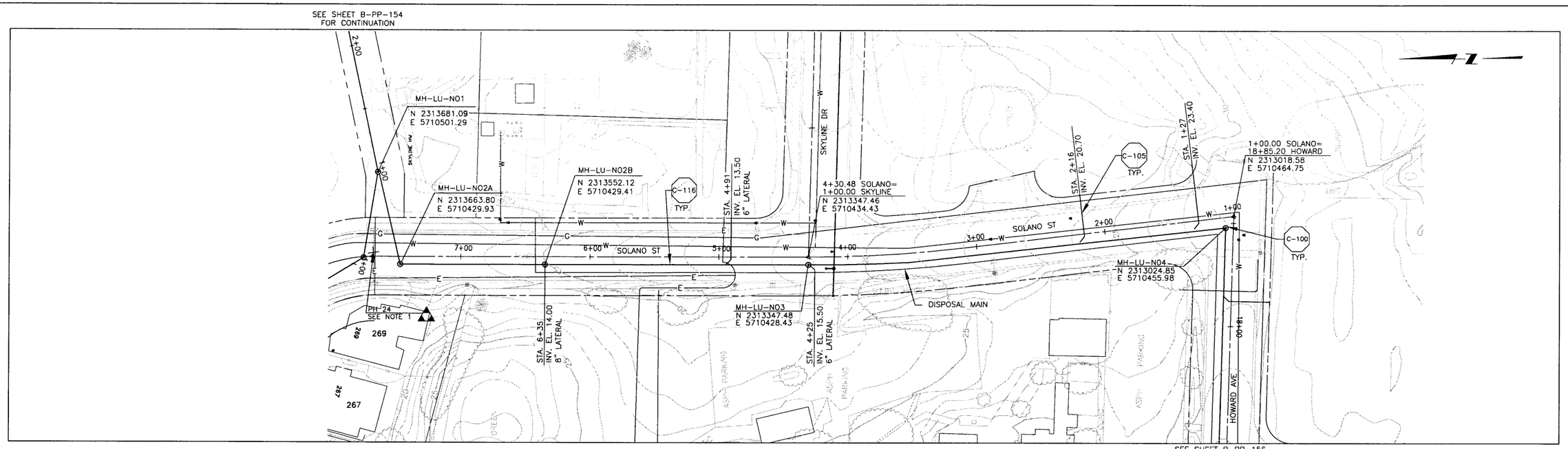

PLAN ON SOLANO STREET

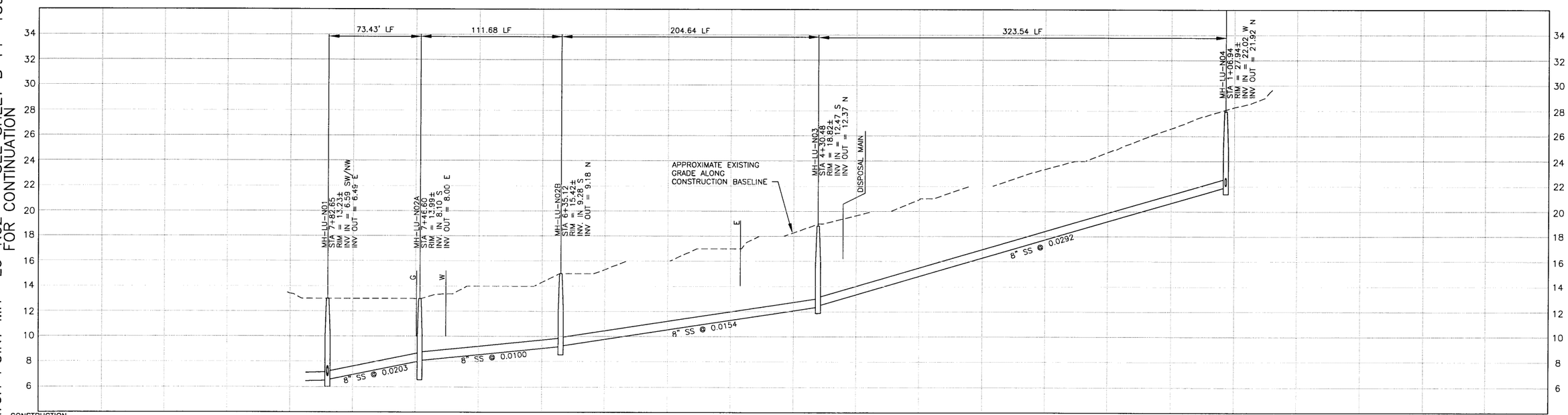

PROFILE ON SOLANO STREET

MATCH POINT MH- LU-N02 - SEE SHEET B-PP-159 FOR CONTINUATION

MATCH POINT MH-LU-N04

NOTES:
1. WATER LINE
2.
3.

DIGALERT DIAL TOLL FREE 1-800-642-2444 AT LEAST TWO DAYS BEFORE YOU DIG UNDERGROUND SERVICE ALERT OF NORTHERN CALIFORNIA

REGISTERED PROFESSIONAL ENGINEER JEFFREY J. EMRICK Lic. No. 40,657 Expires 3/07 CIVIL STATE OF CALIFORNIA

REV	DATE	BY	DESCRIPTION

SCALE: HORZ: 1"=40' VERT: 1"= 4'

WARNING: 0 1/2 1 IF THIS BAR DOES NOT MEASURE 1" THEN DRAWING IS NOT TO SCALE

DESIGNED SH/GH
DRAWN KS/JM/AF/BF
CHECKED SH

SUBMITTED BY
JOHN A. BERGEN — C31069 LICENSE NO. — 02/16/04 DATE
STEVE J. HYLAND — C23892 LICENSE NO. — 02/16/04 DATE

LOS OSOS COMMUNITY SERVICES DISTRICT

MWH Walnut Creek, California

eda design professionals — civil engineers • land surveyors • land planners 1998 santa barbara st • san luis obispo, ca 93401 ph: 805/549-8658 • email: eda@edainc.com

LOS OSOS WASTEWATER PROJECT
PLAN AND PROFILE
SOLANO STREET
STA 1+06.94 TO STA 7+82.65

SHEET B-PP-155

JOB NO. 1481166

K:\22650000\base\EDA-Work\PP-SHEETS - 100% Submittal\55 - Solano.dwg 2/05/04 09:36 AM shawnag

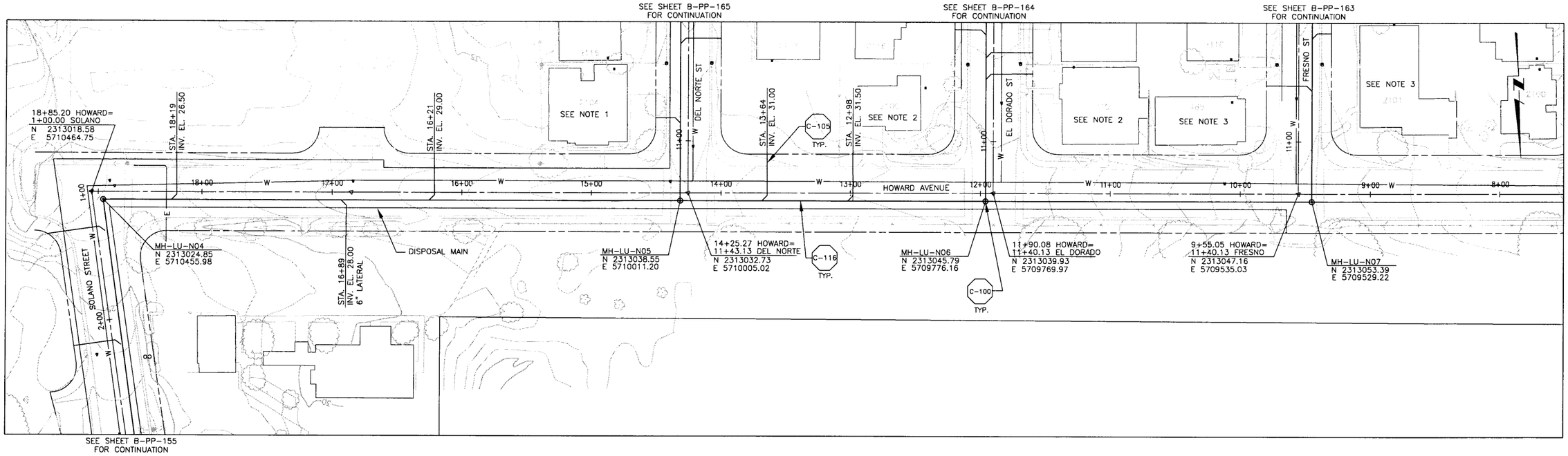

PLAN ON HOWARD AVENUE

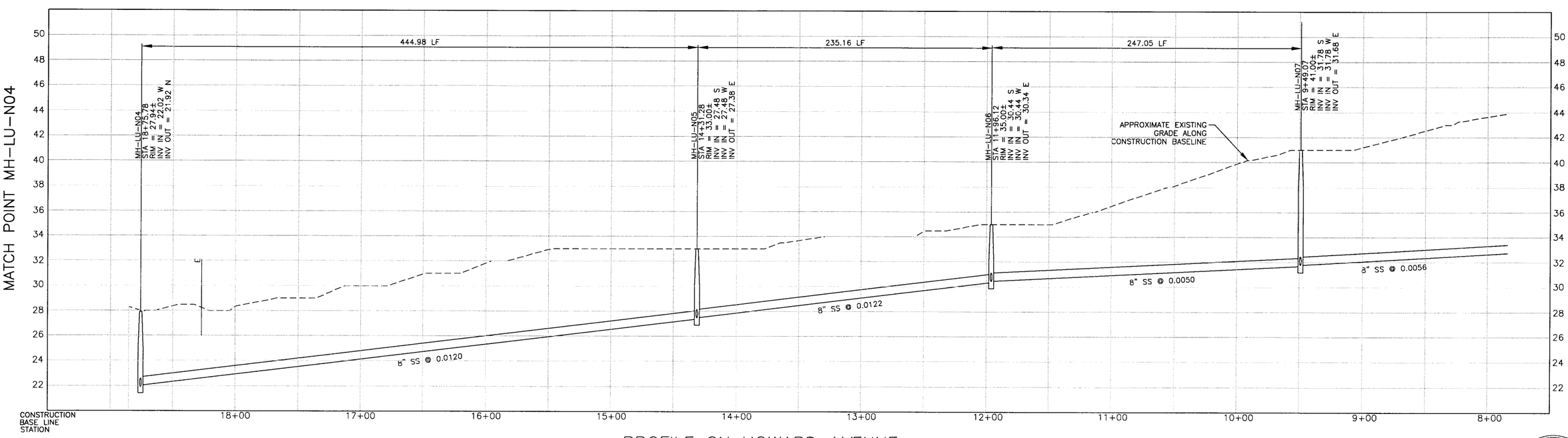

PROFILE ON HOWARD AVENUE

NOTES:

1. 2104 HOWARD AVE SERVED ON DEL NORTE.
2. 2100 AND 2101 HOWARD AVE SERVED ON EL DORADO ST.
3. 185 AND 2101 HOWARD AVE SERVED ON FRESNO ST.

DIGALERT DIAL TOLL FREE 1-800-642-2444 AT LEAST TWO DAYS BEFORE YOU DIG UNDERGROUND SERVICE ALERT OF NORTHERN CALIFORNIA

REGISTERED PROFESSIONAL ENGINEER JEFFREY J. EMRICK Lic. No. 40,657 Expires 3/07 STATE OF CALIFORNIA

REV	DATE	BY	DESCRIPTION

SCALE: HORZ: 1"=40' VERT: 1"= 4'

WARNING: 0 1/2 1 IF THIS BAR DOES NOT MEASURE 1" THEN DRAWING IS NOT TO SCALE

DESIGNED SH/GH
DRAWN KS/JM/AF/BF
CHECKED SH

SUBMITTED BY
JOHN A. BERGEN — C31069 LICENSE NO. — 02/16/04 DATE
STEVE J. HYLAND — C23892 LICENSE NO. — 02/16/04 DATE

LOS OSOS COMMUNITY SERVICES DISTRICT

MWH Walnut Creek, California

eda design professionals — civil engineers • land surveyors • land planners 1998 santa barbara st • san luis obispo, ca 93401 ph: 805/549-8658 • email: eda@edainc.com

LOS OSOS WASTEWATER PROJECT
PLAN AND PROFILE
HOWARD AVENUE
STA 9+49.07 TO STA 18+75.78

SHEET B-PP-156

K:\22650000\base\EDA-Work\PP-SHEETS - 100% Submittal\56 - Howard.dwg 2/05/04 09:36 AM shawnag JOB NO. 1481166

MATCH POINT MH-LU-N08 - SEE SHEET B-PP-156 FOR CONTINUATION

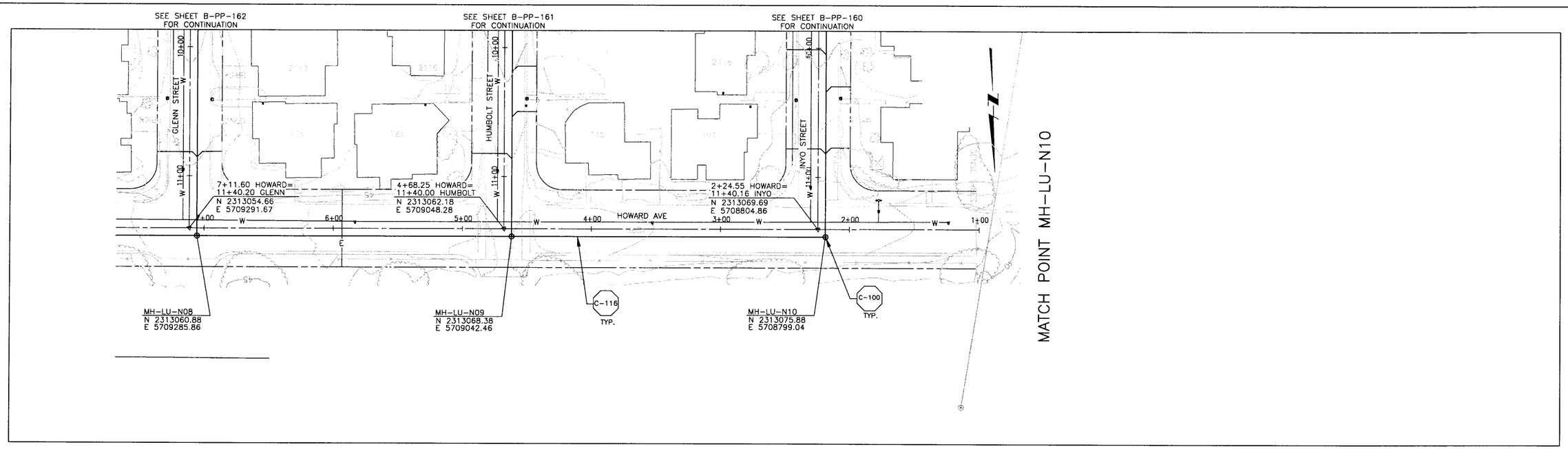

MATCH POINT MH-LU-N10

PLAN ON HOWARD AVENUE

MATCH POINT MH-LU-N08 - SEE SHEET B-PP-156 FOR CONTINUATION

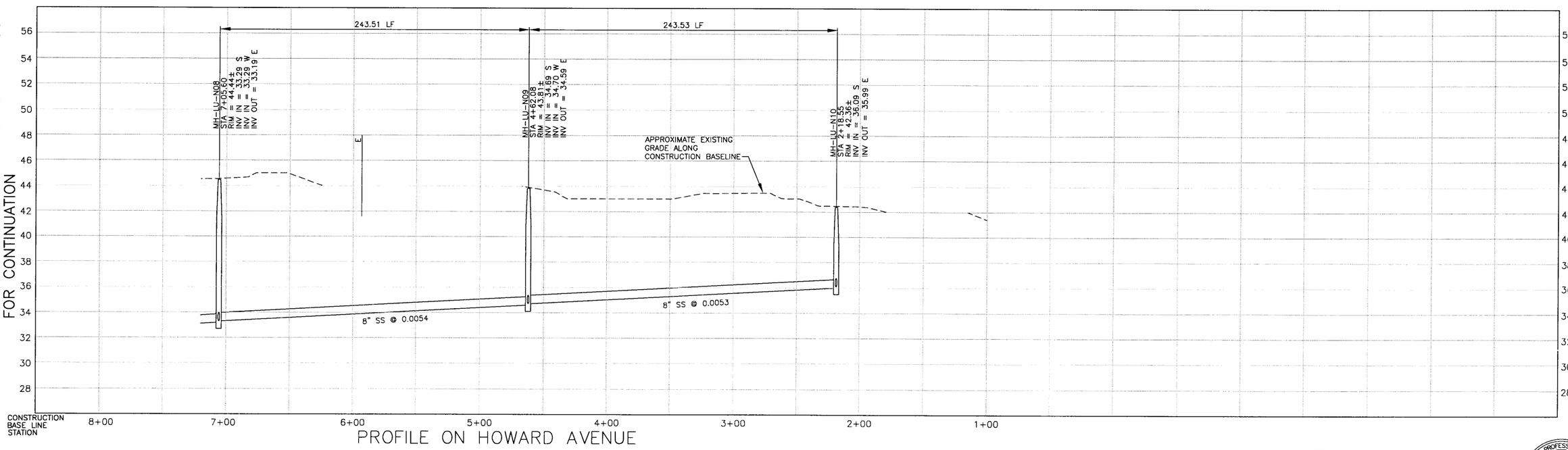

MATCH POINT MH-LU-N10

PROFILE ON HOWARD AVENUE

NOTES:

1.
2.
3.

DIGALERT
DIAL TOLL FREE
1-800-642-2444
AT LEAST TWO DAYS BEFORE YOU DIG
UNDERGROUND SERVICE ALERT OF NORTHERN CALIFORNIA

REGISTERED PROFESSIONAL ENGINEER
STEVEN J. HYLAND
No. 40,657
Expires 3/07
CIVIL
STATE OF CALIFORNIA

REV	DATE	BY	DESCRIPTION

SCALE
HORZ: 1"=40'
VERT: 1"= 4'

WARNING
0 1/2 1
IF THIS BAR DOES NOT MEASURE 1" THEN DRAWING IS NOT TO SCALE

DESIGNED SH/GH
DRAWN KS/JM/AF/BF
CHECKED SH

SUBMITTED BY
JOHN A. BERGEN — C31069 — LICENSE NO. — 02/16/04 — DATE
STEVE J. HYLAND — C23892 — LICENSE NO. — 02/16/04 — DATE

LOS OSOS COMMUNITY SERVICES DISTRICT

MWH Walnut Creek, California

eda design professionals
civil engineers • land surveyors • land planners
1998 santa barbara st • san luis obispo, ca 93401
ph: 805/549-8658 • email: eda@edainc.com

LOS OSOS WASTEWATER PROJECT
PLAN AND PROFILE
HOWARD AVENUE
STA 2+18.55 TO STA 7+05.60

SHEET
B-PP-157

K:\2765\0000\base\EDA-Work\PP-SHEETS - 100% Submittal\67 - Howard.dwg 2/05/04 09:37 AM shawnsg JOB NO. 1481166

MATCH POINT MH-LU-NG03 - SEE SHEET B-PP-159 FOR CONTINUATION

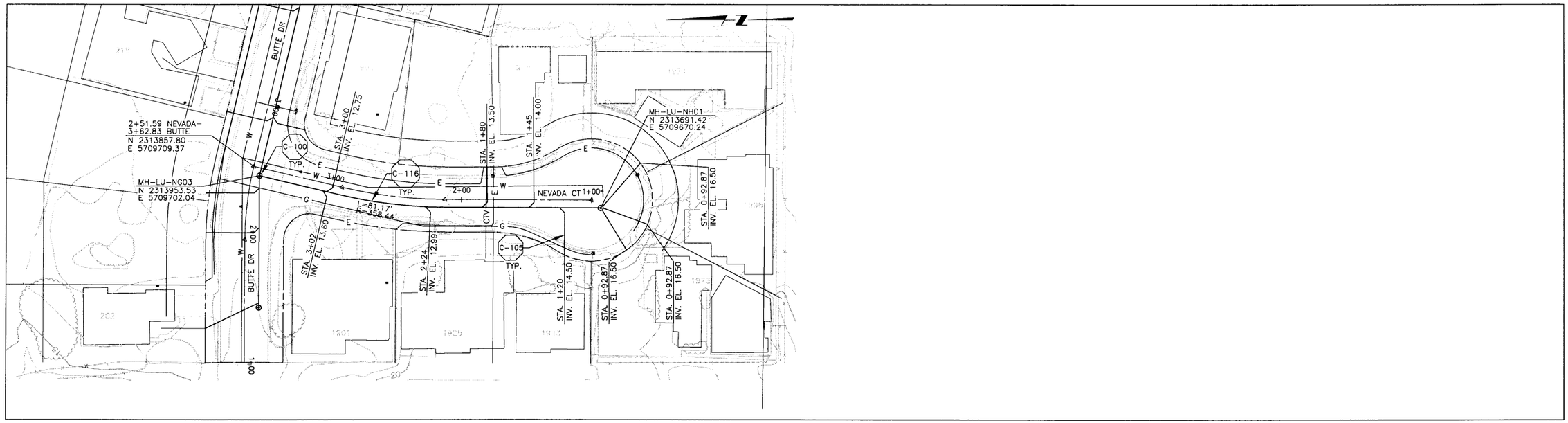

PLAN ON NEVADA COURT

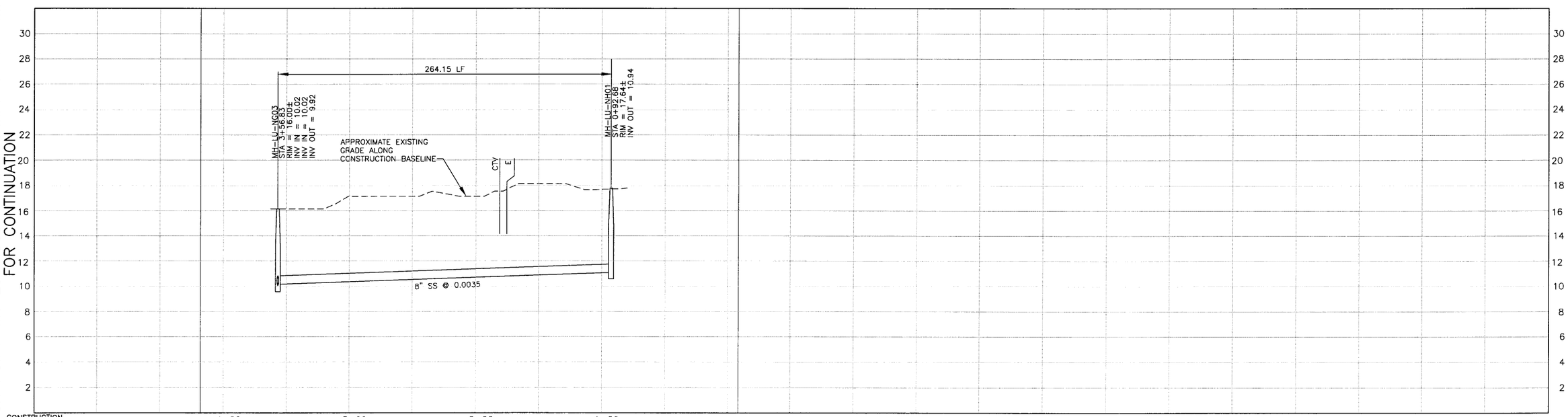

PROFILE ON NEVADA COURT

NOTES:

1.
2.
3.

DIGALERT
DIAL TOLL FREE
1-800-642-2444
AT LEAST TWO DAYS BEFORE YOU DIG
UNDERGROUND SERVICE ALERT OF NORTHERN CALIFORNIA

REGISTERED PROFESSIONAL ENGINEER
STEVEN J. HYLAND
Lic. No. 40,657
Expires 3/07
CIVIL
STATE OF CALIFORNIA

REV	DATE	BY	DESCRIPTION

SCALE
HORZ: 1"=40'
VERT: 1"= 4'

WARNING
0 1/2 1
IF THIS BAR DOES NOT MEASURE 1" THEN DRAWING IS NOT TO SCALE

DESIGNED SH/GH
DRAWN KS/JM/AF/BF
CHECKED SH

SUBMITTED BY
JOHN A. BERGEN — C31069 — LICENSE NO. — 02/16/04 — DATE
STEVE J. HYLAND — C23892 — LICENSE NO. — 02/16/04 — DATE

LOS OSOS COMMUNITY SERVICES DISTRICT

MWH Walnut Creek, California

eda design professionals
civil engineers • land surveyors • land planners
1998 santa barbara st • san luis obispo, ca 93401
ph: 805/549-8658 • email: eda@edainc.com

LOS OSOS WASTEWATER PROJECT
PLAN AND PROFILE
NEVADA COURT
STA 0+92.68 TO STA 3+56.83

SHEET
B-PP-158

K:\2765000D\base\EDA-Work\PP-SHEETS - 100% Submitted\58 - Nevada.dwg 2/05/04 09:38 AM shawnag JOB NO 1481166

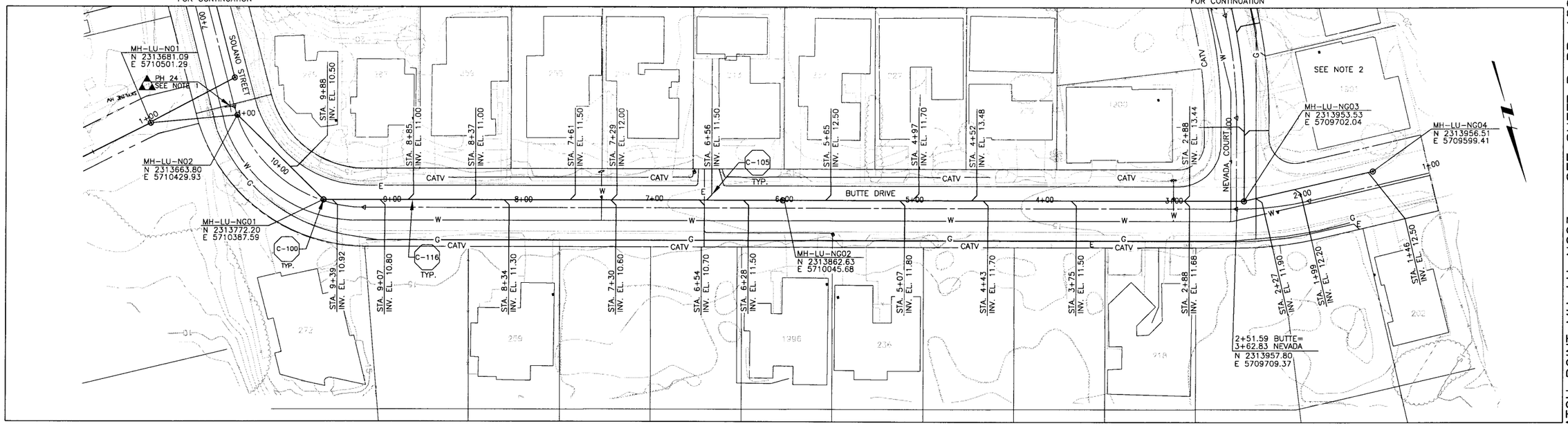

PLAN ON BUTTE DRIVE

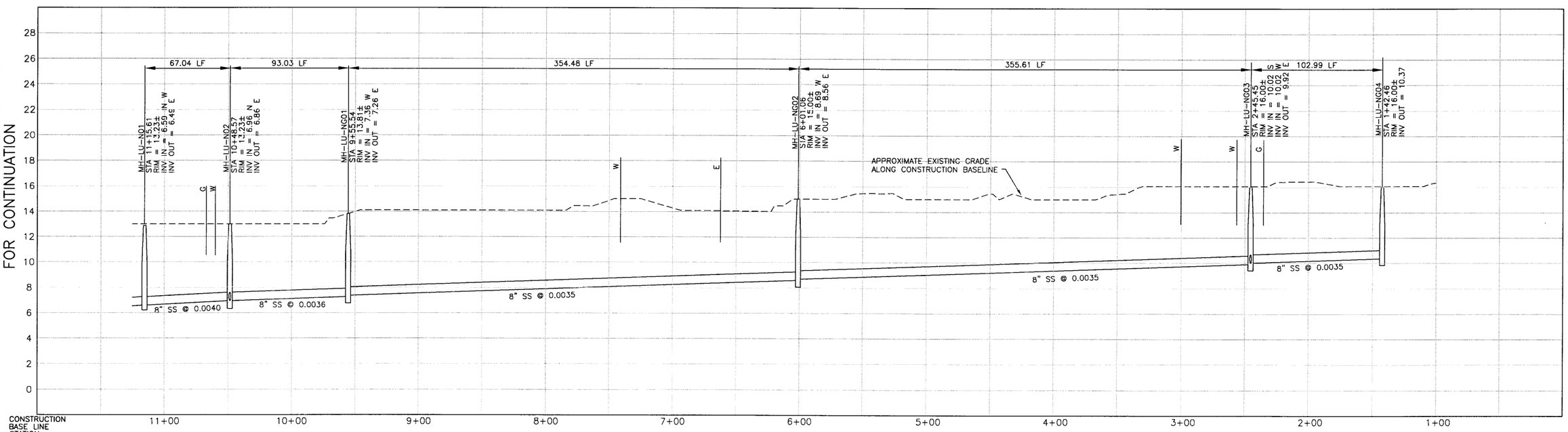

PROFILE ON BUTTE DRIVE

NOTES:

1. WATER LINE
2. 1901 BUTTE DRIVE SERVED ON NEVADA COURT
3.

DIGALERT DIAL TOLL FREE 1-800-642-2444 AT LEAST TWO DAYS BEFORE YOU DIG UNDERGROUND SERVICE ALERT OF NORTHERN CALIFORNIA

REGISTERED PROFESSIONAL ENGINEER JEFFREY J. EMRICK No. 40,657 Expires 3/07 CIVIL STATE OF CALIFORNIA

REV	DATE	BY	DESCRIPTION

SCALE: HORZ: 1"=40' VERT: 1"= 4'

WARNING: 0 1/2 1 IF THIS BAR DOES NOT MEASURE 1" THEN DRAWING IS NOT TO SCALE

DESIGNED SH/GH
DRAWN KS/JM/AF/BF
CHECKED SH

SUBMITTED BY
JOHN A. BERGEN — C31069 LICENSE NO. — 02/16/04 DATE
STEVE J. HYLAND — C23892 LICENSE NO. — 02/16/04 DATE

LOS OSOS COMMUNITY SERVICES DISTRICT

MWH Walnut Creek, California

eda design professionals — civil engineers • land surveyors • land planners — 1998 santa barbara st • san luis obispo, ca 93401 — ph: 805/549-8658 • email: eda@edainc.com

LOS OSOS WASTEWATER PROJECT
PLAN AND PROFILE
BUTTE DRIVE
STA 1+42.46 TO STA 10+11+15.61

SHEET B-PP-159

K:\22650000\base\EDA-Work\PP-SHEETS - 100% Submittal\59 - Butte.dwg 2/05/04 09:38 AM shawnag JOB NO. 1481166

MATCH POINT MH- LU-N10

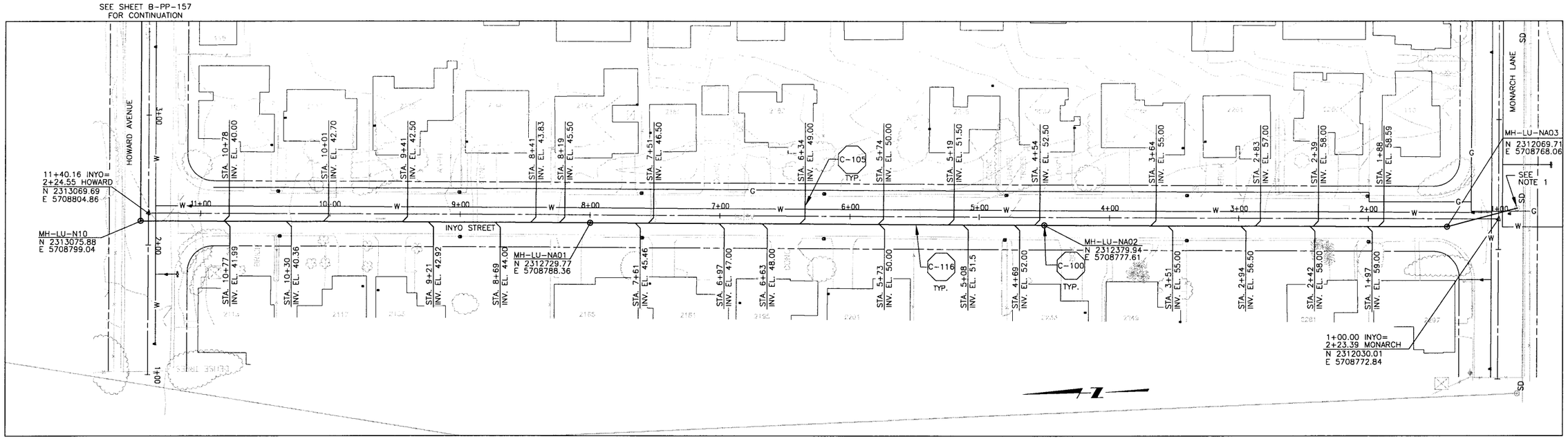

SEE SHEET B-PP-157
FOR CONTINUATION

PLAN ON INYO STREET

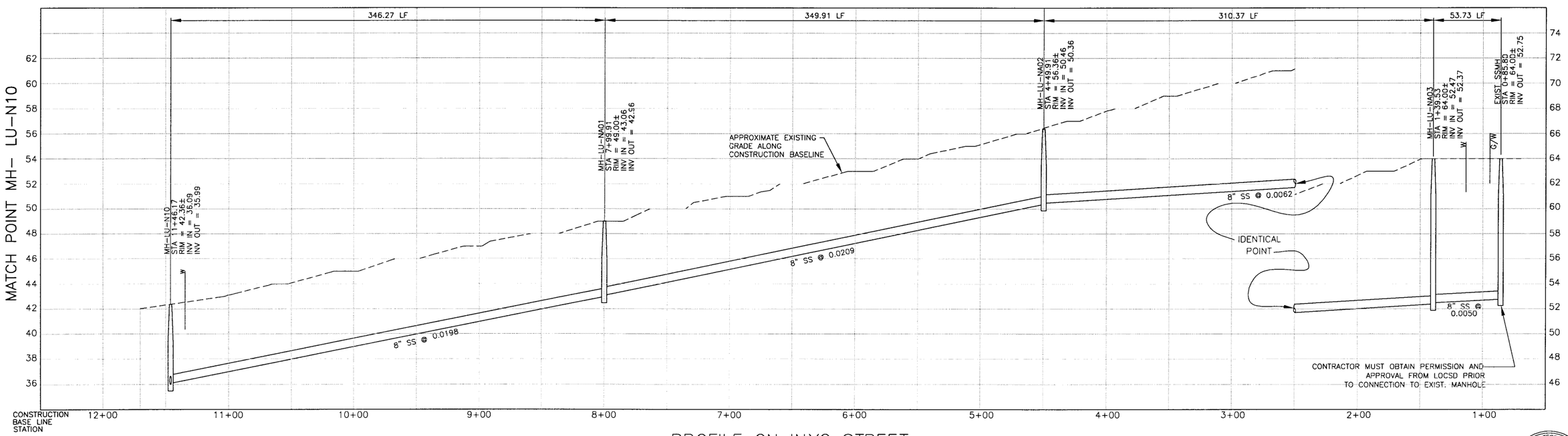

PROFILE ON INYO STREET

NOTES:

1. CONTRACTOR MUST OBTAIN PERMISSION AND APPROVAL FROM LOCSD PRIOR TO CONNECTION TO EXIST. MANHOLE
2.
3.

DIGALERT
DIAL TOLL FREE
1-800-642-2444
AT LEAST TWO DAYS
BEFORE YOU DIG
UNDERGROUND SERVICE ALERT OF NORTHERN CALIFORNIA

REGISTERED PROFESSIONAL ENGINEER
STEVEN J. HYLAND
Lic. No. 40,657
Expires 3/07
CIVIL
STATE OF CALIFORNIA

REV	DATE	BY	DESCRIPTION

SCALE
HORZ: 1"=40'
VERT: 1"= 4'

WARNING
0 1/2 1
IF THIS BAR DOES NOT MEASURE 1" THEN DRAWING IS NOT TO SCALE

DESIGNED SH/GH
DRAWN KS/JM/AF/BF
CHECKED SH

SUBMITTED BY
JOHN A. BERGEN — C31069 — LICENSE NO. — 02/16/04 — DATE
STEVEN J. HYLAND — C23892 — LICENSE NO. — 02/16/04 — DATE

LOS OSOS
COMMUNITY SERVICES DISTRICT

MWH
Walnut Creek, California

eda design professionals
civil engineers • land surveyors • land planners
1998 santa barbara st • san luis obispo, ca 93401
ph: 805/549-8658 • email: eda@edainc.com

LOS OSOS WASTEWATER PROJECT
PLAN AND PROFILE
INYO STREET
STA 0+85.80 TO STA 11+46.17

SHEET
B-PP-160

JOB NO. 1481166

X:\2265000\base\CDA-Work\PP-SHEETS - 100% Submittal\60 - Inyo.dwg 2/05/04 09:39 AM shawnog

MATCH POINT MH-LU-N09

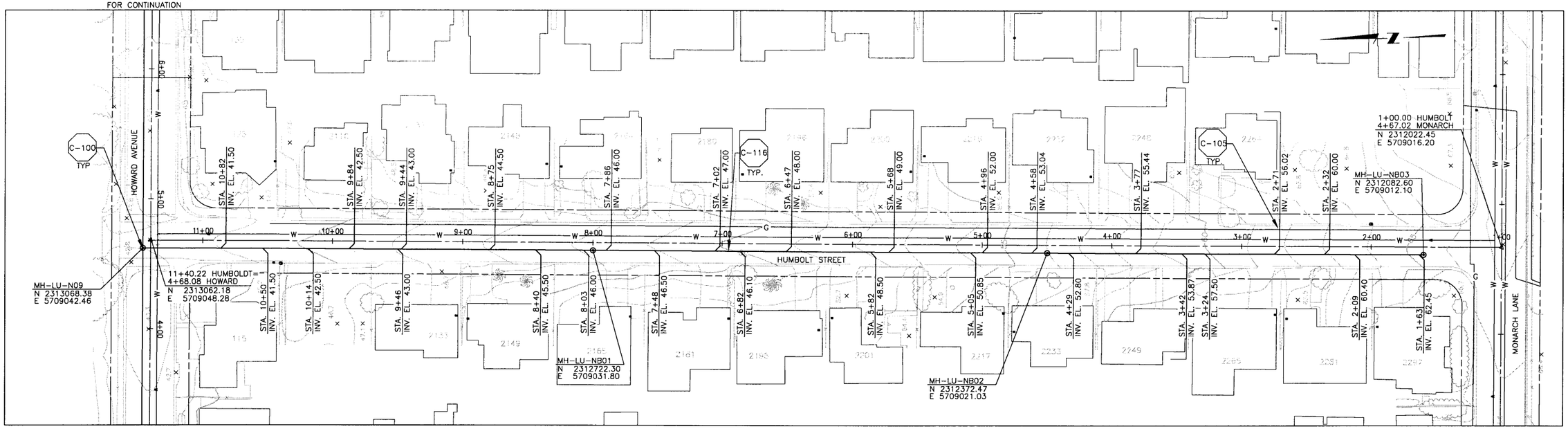

PLAN ON HUMBOLT STREET

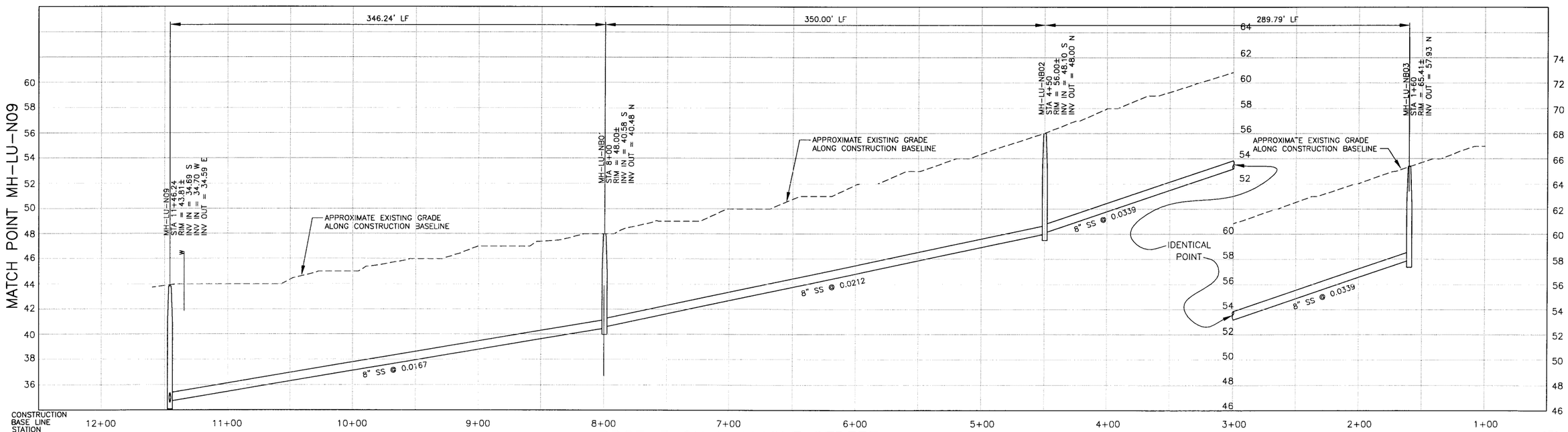

PROFILE ON HUMBOLT STREET

NOTES:

1.
2.
3.

DIGALERT
DIAL TOLL FREE 1-800-642-2444
AT LEAST TWO DAYS BEFORE YOU DIG
UNDERGROUND SERVICE ALERT OF NORTHERN CALIFORNIA

REGISTERED PROFESSIONAL ENGINEER JEFFREY J. EMRICK Lic. No. 40,657 Expires 3/07 STATE OF CALIFORNIA

REV	DATE	BY	DESCRIPTION

SCALE: HORZ: 1"=40' VERT: 1"= 4'

WARNING: 0 1/2 1 IF THIS BAR DOES NOT MEASURE 1" THEN DRAWING IS NOT TO SCALE

DESIGNED SH/GH
DRAWN KS/JM/AF/BF
CHECKED SH

SUBMITTED BY
JOHN A. BERGEN — C31069 LICENSE NO. — 02/16/04 DATE
STEVE J. HYLAND — C23892 LICENSE NO. — 02/16/04 DATE

LOS OSOS COMMUNITY SERVICES DISTRICT

MWH Walnut Creek, California

eda design professionals
civil engineers • land surveyors • land planners
1998 santa barbara st • san luis obispo, ca 93401
ph: 805/549-8658 • email: eda@edainc.com

LOS OSOS WASTEWATER PROJECT
PLAN AND PROFILE
HUMBOLT STREET
STA 1+60.00 TO STA 11+46.24

SHEET B-PP-161

K:\22650000\base\EDA-Work\PP-SHEETS - 100% Submittal\61 - Humboldt.dwg 2/05/04 09:40 AM shawnag JOB NO. 1481166

SEE SHEET B-PP-156
FOR CONTINUATION

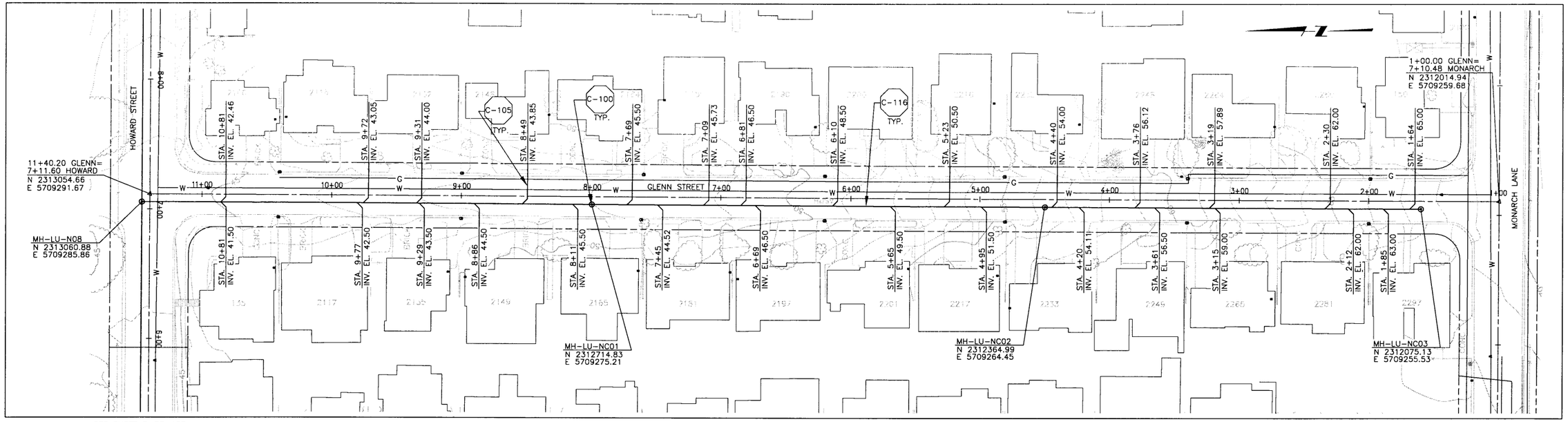

SEE SHEET B-PP-157
FOR CONTINUATION

PLAN ON GLENN STREET

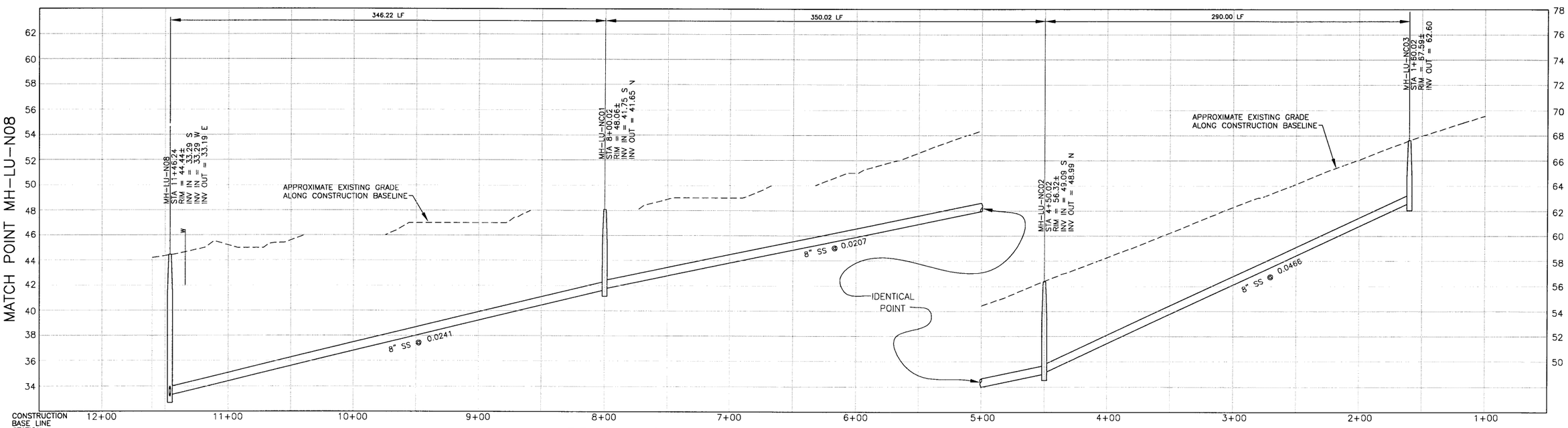

PROFILE ON GLENN STREET

NOTES:

1.
2.
3.

DIGALERT
DIAL TOLL FREE
1-800-642-2444
AT LEAST TWO DAYS
BEFORE YOU DIG
UNDERGROUND SERVICE ALERT OF NORTHERN CALIFORNIA

REV	DATE	BY	DESCRIPTION

SCALE
HORZ: 1"=40'
VERT: 1"= 4'

WARNING
0 1/2 1
IF THIS BAR DOES NOT MEASURE 1" THEN DRAWING IS NOT TO SCALE

DESIGNED SH/GH
DRAWN KS/JM/AF/BF
CHECKED SH

SUBMITTED BY
JOHN A. BERGEN — C31069 — LICENSE NO. — 02/16/04 — DATE
STEVEN J. HYLAND — C23892 — LICENSE NO. — 02/16/04 — DATE

LOS OSOS
COMMUNITY SERVICES DISTRICT

MWH
Walnut Creek, California

eda design professionals
civil engineers • land surveyors • land planners
1998 santa barbara st • san luis obispo, ca 93401
ph: 805/549-8658 • email: eda@edainc.com

LOS OSOS WASTEWATER PROJECT
PLAN AND PROFILE
GLENN STREET
STA 1+60.02 TO STA 11+46.24

SHEET
B-PP-162

K:\2260000\base\CDA-Work\PP-SHEETS - 100% Submittal\02 - Glenn.dwg 2/05/04 09:41 AM shawnsg JOB NO. 1481166

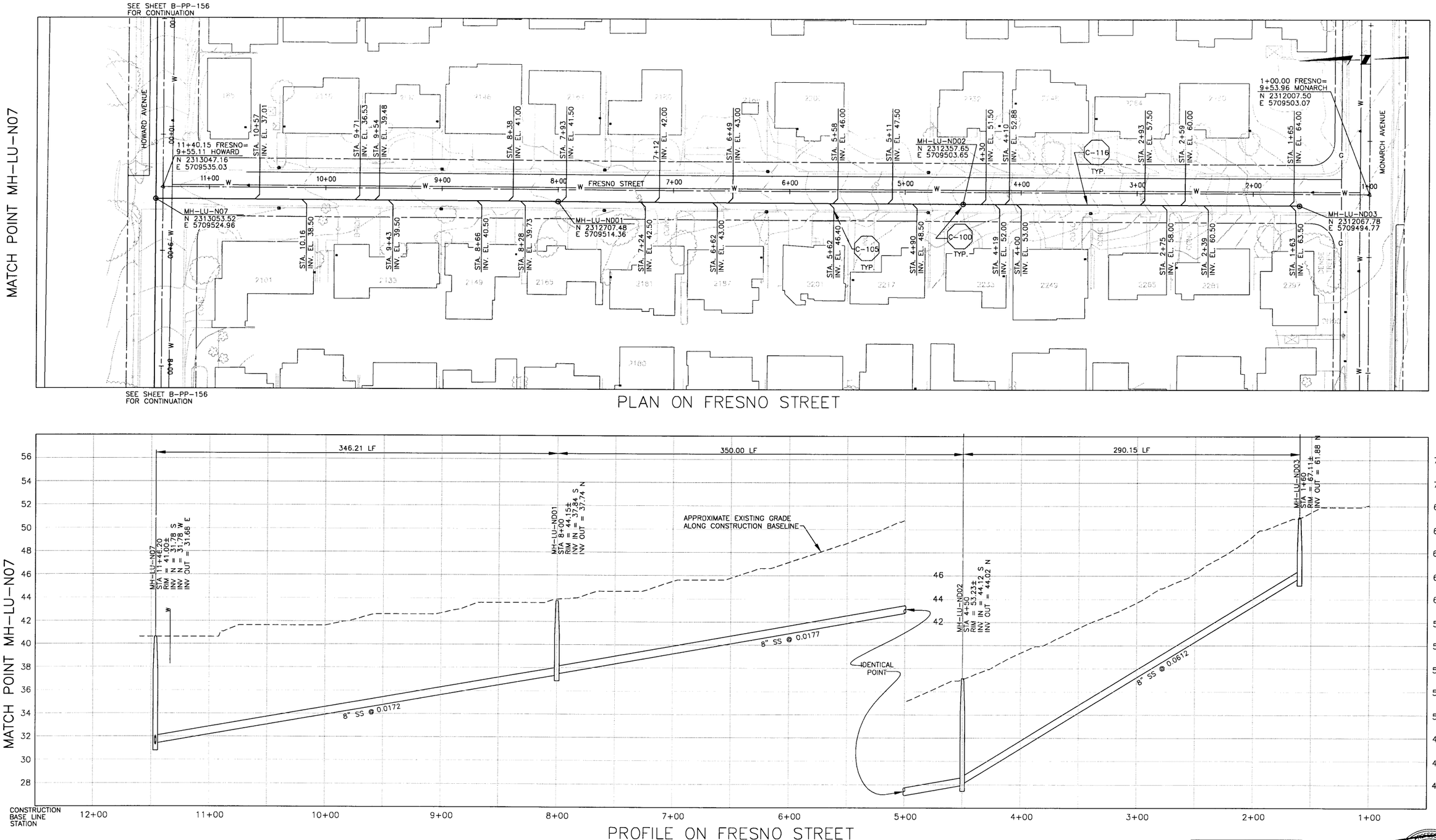

PLAN ON FRESNO STREET

PROFILE ON FRESNO STREET

NOTES:

1.
2.
3.

DIGALERT DIAL TOLL FREE 1-800-642-2444 AT LEAST TWO DAYS BEFORE YOU DIG UNDERGROUND SERVICE ALERT OF NORTHERN CALIFORNIA

REGISTERED PROFESSIONAL ENGINEER JEFFREY J. EMPOLI No. 40,657 Exp. 3/07 CIVIL STATE OF CALIFORNIA

REV	DATE	BY	DESCRIPTION

SCALE: HORZ: 1"=40' VERT: 1"= 4'

WARNING: 0 1/2 1 — IF THIS BAR DOES NOT MEASURE 1" THEN DRAWING IS NOT TO SCALE

DESIGNED SH/GH
DRAWN KS/JM/AF/BF
CHECKED SH

SUBMITTED BY
JOHN A. BERGEN — C31069 LICENSE NO. — 02/16/04 DATE
STEVE J. HYLAND — C23892 LICENSE NO. — 02/16/04 DATE

LOS OSOS COMMUNITY SERVICES DISTRICT

MWH Walnut Creek, California

eda design professionals — civil engineers • land surveyors • land planners — 1998 santa barbara st • san luis obispo, ca 93401 — ph: 805/549-8658 • email: eda@adainc.com

LOS OSOS WASTEWATER PROJECT
PLAN AND PROFILE
FRESNO STREET
STA 1+60.00 TO STA 11+46.20

SHEET B-PP-163

K:\2050000\base\CDA-Work\PP-SHEETS - 100% Submittal\63 - Fres.2.dwg 2/05/04 09:42 AM shawnsg JOB NO. 1481166

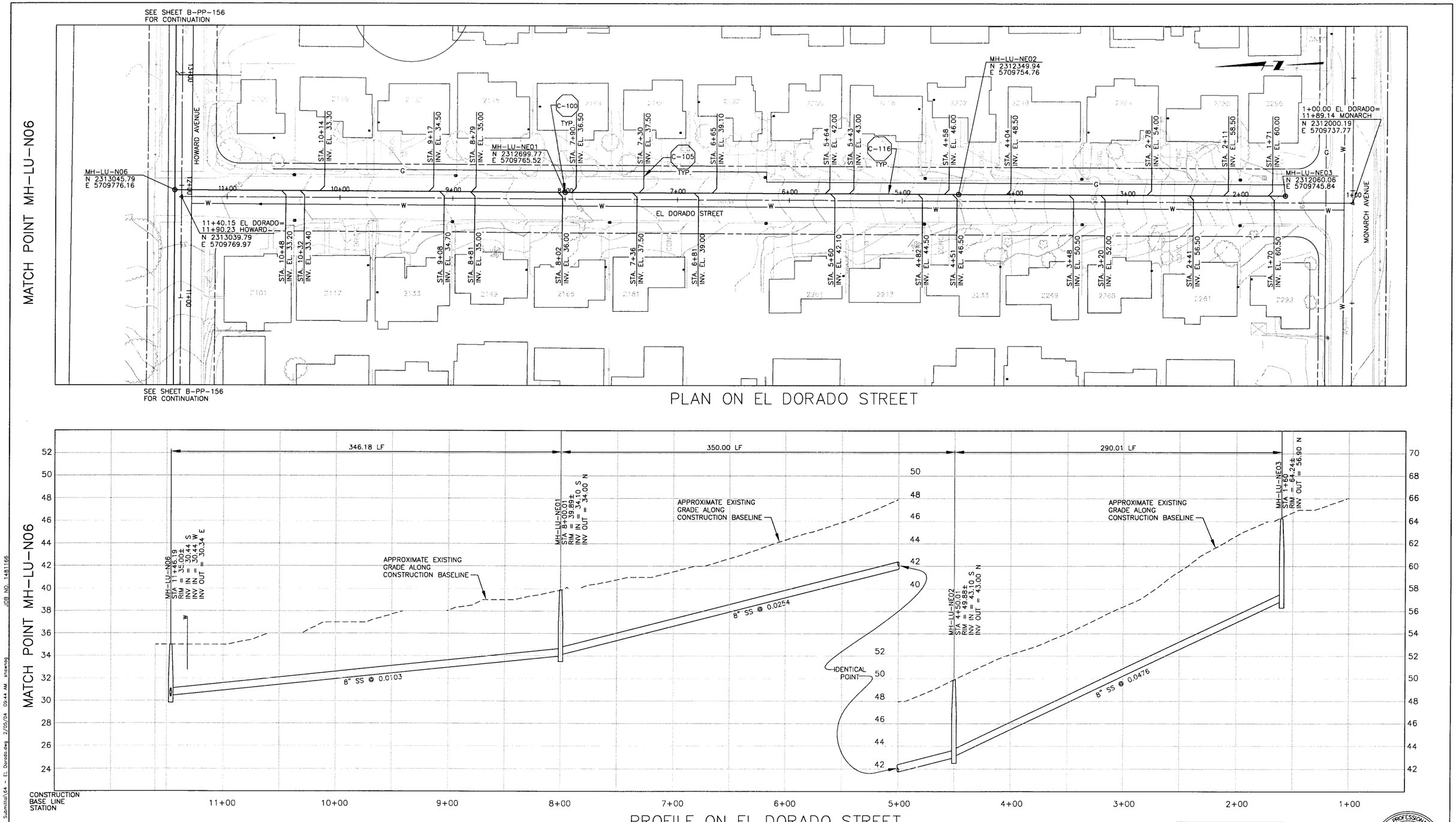

NOTES:

1.
2.
3.

DIGALERT
DIAL TOLL FREE
1-800-642-2444
AT LEAST TWO DAYS BEFORE YOU DIG
UNDERGROUND SERVICE ALERT OF NORTHERN CALIFORNIA

REGISTERED PROFESSIONAL ENGINEER
JEFFREY J. EMRICK
No. 40,657
Expires 3/07
CIVIL
STATE OF CALIFORNIA

REV	DATE	BY	DESCRIPTION

SCALE
HORZ: 1"=40'
VERT: 1"= 4'

WARNING
0 1/2 1
IF THIS BAR DOES NOT MEASURE 1" THEN DRAWING IS NOT TO SCALE

DESIGNED SH/GH
DRAWN KS/JM/AF/BF
CHECKED SH

SUBMITTED BY
JOHN A. BERGEN — C31069 LICENSE NO. — 02/16/04 DATE
STEVE J. HYLAND — C23892 LICENSE NO. — 02/16/04 DATE

LOS OSOS COMMUNITY SERVICES DISTRICT

MWH Walnut Creek, California

eda design professionals
civil engineers • land surveyors • land planners
1998 santa barbara st • san luis obispo, ca 93401
ph: 805/549-8658 • email: eda@edainc.com

LOS OSOS WASTEWATER PROJECT
PLAN AND PROFILE
EL DORADO STREET
STA 1+60.00 TO STA 11+46.19

SHEET
B-PP-164

K:\22650000\base\EDA-Work\PP-SHEETS - 100% Submittal\64 - EL Dorado.dwg 2/05/04 09:44 AM shawnag JOB NO. 1481166

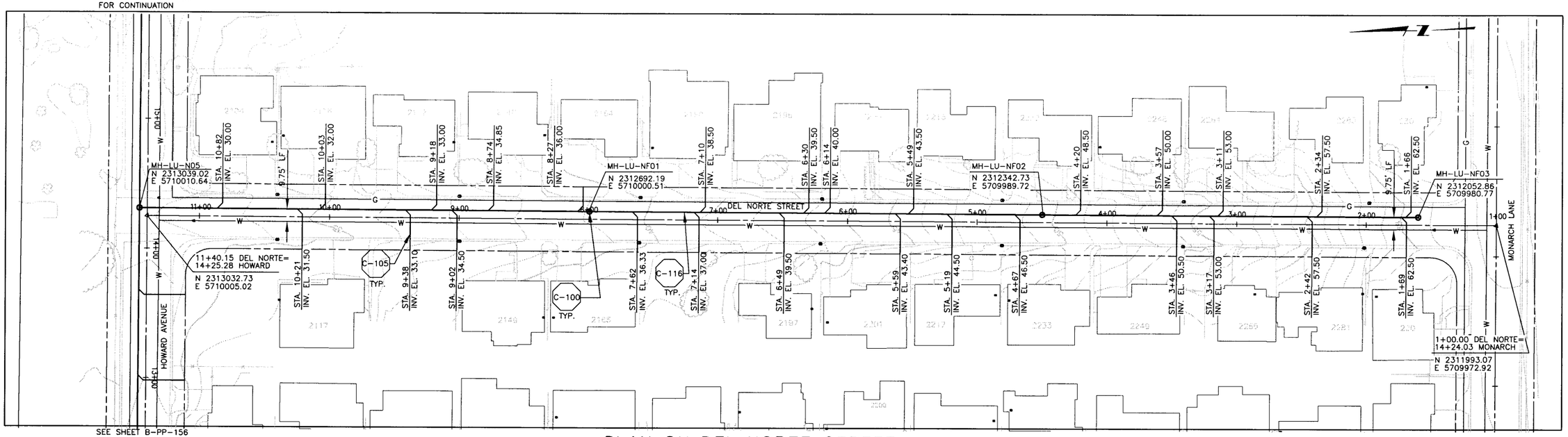

PLAN ON DEL NORTE STREET

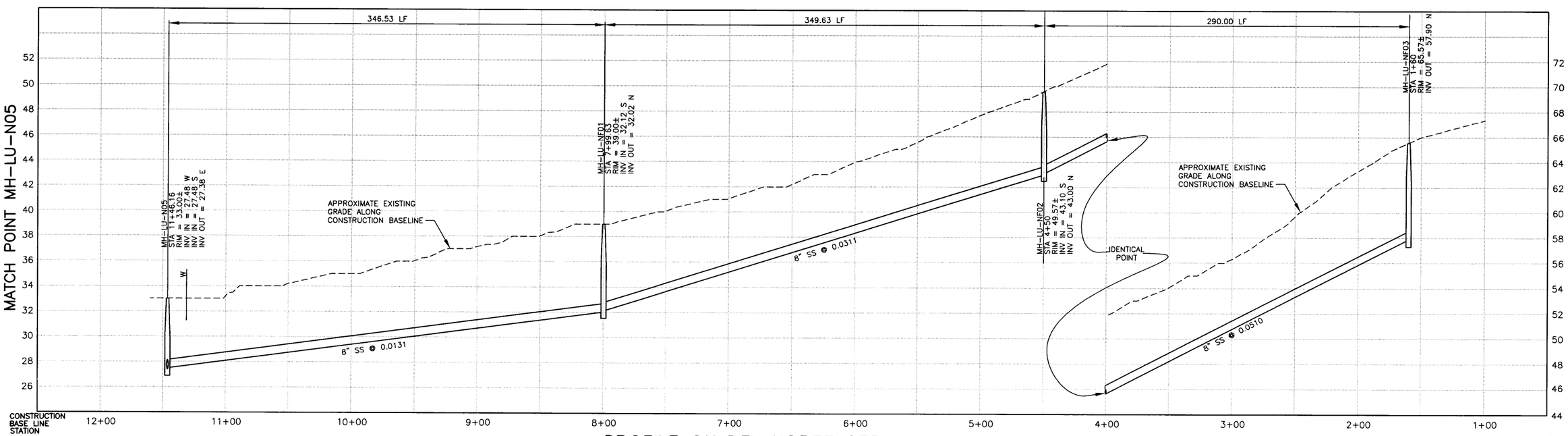

PROFILE ON DEL NORTE STREET

NOTES:

1.
2.
3.

DIGALERT
DIAL TOLL FREE
1-800-642-2444
AT LEAST TWO DAYS BEFORE YOU DIG
UNDERGROUND SERVICE ALERT OF NORTHERN CALIFORNIA

REGISTERED PROFESSIONAL ENGINEER
JEFFREY J. EMRICK
Lic. No. 40,657
Expires 3/07
CIVIL
STATE OF CALIFORNIA

REV	DATE	BY	DESCRIPTION

SCALE
HORZ: 1"=40'
VERT: 1"= 4'

WARNING
0 1/2 1
IF THIS BAR DOES NOT MEASURE 1" THEN DRAWING IS NOT TO SCALE

DESIGNED SH/GH
DRAWN KS/JM/AF/BF
CHECKED SH

SUBMITTED BY
JOHN A. BERGEN — C31069 LICENSE NO. — 02/16/04 DATE
STEVE J. HYLAND — C23892 LICENSE NO. — 02/16/04 DATE

LOS OSOS
COMMUNITY SERVICES DISTRICT

MWH
Walnut Creek, California

eda design professionals
civil engineers • land surveyors • land planners
1998 santa barbara st • san luis obispo, ca 93401
ph: 805/549-8658 • email: eda@edainc.com

LOS OSOS WASTEWATER PROJECT
PLAN AND PROFILE
DEL NORTE STREET
STA 1+60.00 TO STA 11+46.16

SHEET
B-PP-165

K:\22650000\base\EDA-Work\PP-SHEETS - 100% Submittal\65 - Del Norte.dwg 2/05/04 11:21 AM kathys JOB NO 1481166

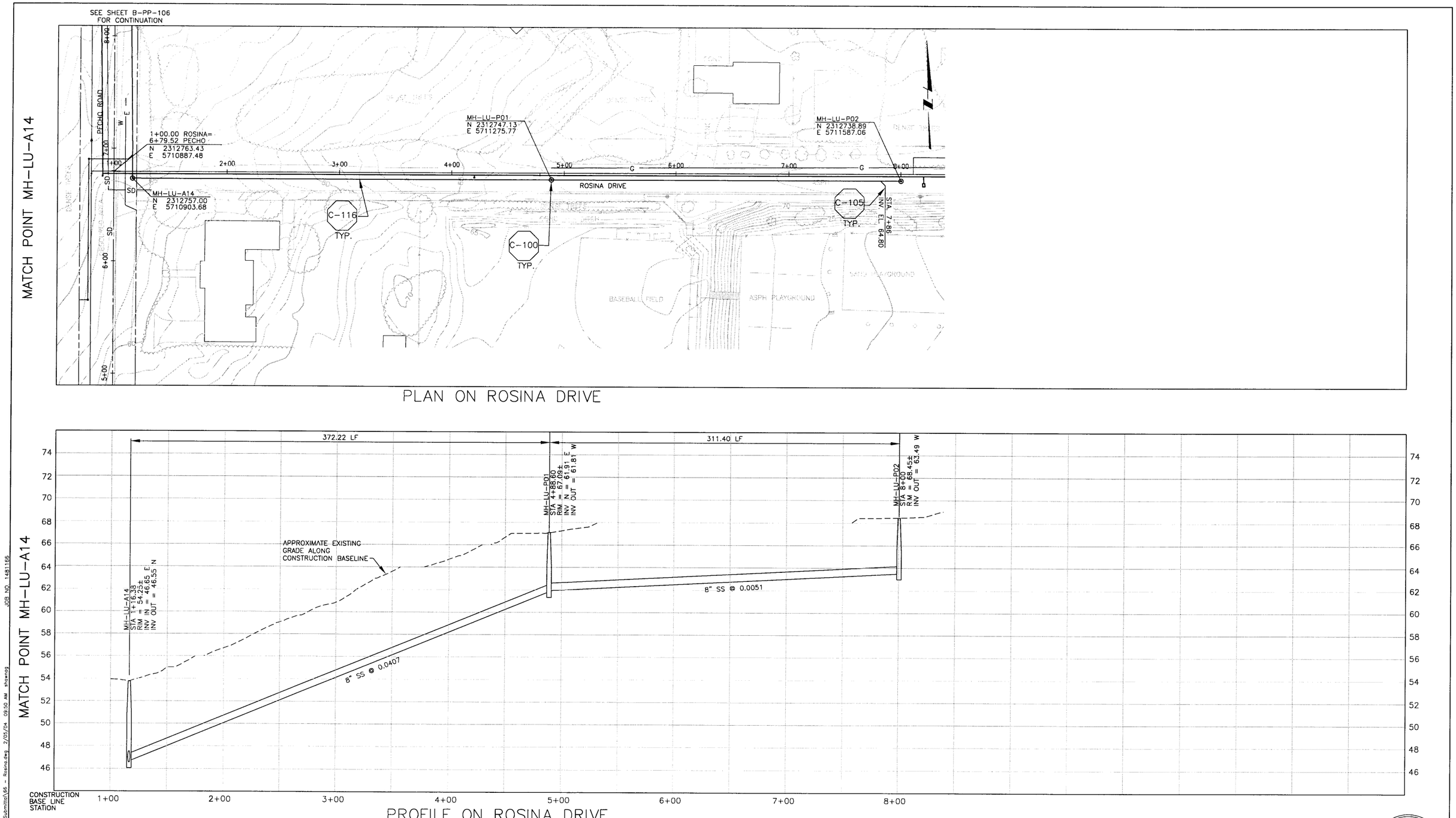

NOTES:

1.
2.
3.

DIGALERT
DIAL TOLL FREE
1-800-642-2444
AT LEAST TWO DAYS BEFORE YOU DIG
UNDERGROUND SERVICE ALERT OF NORTHERN CALIFORNIA

REGISTERED PROFESSIONAL ENGINEER JEFFREY L. ERRICK No. 40,657 Expires 3/07 CIVIL STATE OF CALIFORNIA

REV	DATE	BY	DESCRIPTION

SCALE
HORZ: 1"=40'
VERT: 1"= 4'

WARNING
0 1/2 1
IF THIS BAR DOES NOT MEASURE 1" THEN DRAWING IS NOT TO SCALE

DESIGNED SH/GH
DRAWN KS/JM/AF/BF
CHECKED SH

SUBMITTED BY
JOHN A. BERGEN — C31069 LICENSE NO. — 02/16/04 DATE
STEVE J. HYLAND — C23892 LICENSE NO. — 02/16/04 DATE

LOS OSOS COMMUNITY SERVICES DISTRICT

MWH Walnut Creek, California

eda design professionals
civil engineers • land surveyors • land planners
1998 santa barbara st • san luis obispo, ca 93401
ph. 805/549-8658 • email: eda@edainc.com

LOS OSOS WASTEWATER PROJECT
PLAN AND PROFILE
ROSINA DRIVE
STA 1+16.38 TO STA 8+00.00

SHEET
B-PP-166

K:\22650000\base\EDA-Work\PP-SHEETS - 100% Submittal\66 - Rosina.dwg 2/05/04 09:50 AM shawnag JOB NO. 1481166

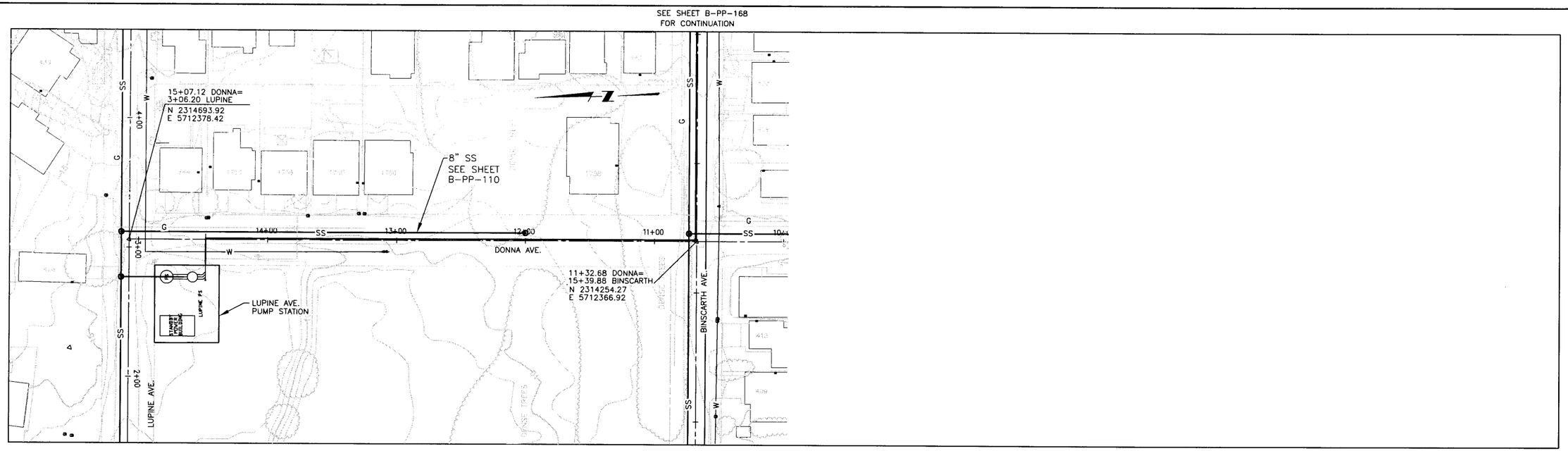

LUPINE FORCE MAIN PLAN ON DONNA

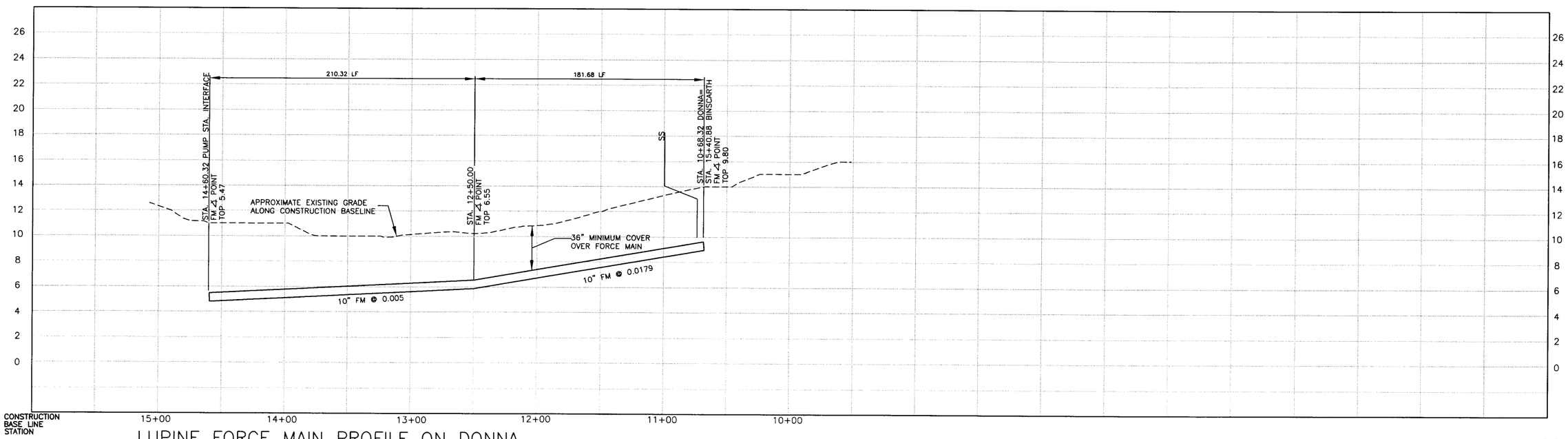

LUPINE FORCE MAIN PROFILE ON DONNA

NOTES:

1.
2.
3.

DIGALERT
DIAL TOLL FREE
1-800-642-2444
AT LEAST TWO DAYS BEFORE YOU DIG
UNDERGROUND SERVICE ALERT OF NORTHERN CALIFORNIA

REGISTERED PROFESSIONAL ENGINEER
JEFFREY J. EMRICK
Lic. No. 40,657
Expires 3/03
CIVIL
STATE OF CALIFORNIA

REV	DATE	BY	DESCRIPTION

SCALE: HORIZ. 1"=40' VERT. 1"=4'

WARNING: 0 1/2 1 — IF THIS BAR DOES NOT MEASURE 1" THEN DRAWING IS NOT TO SCALE

DESIGNED SH
DRAWN KS/JM/AF/BF
CHECKED SH

SUBMITTED BY
JOHN A. BERGEN — C31069 LICENSE NO. — 02/16/04 DATE
STEVE J. HYLAND — C23892 LICENSE NO. — 02/16/04 DATE

LOS OSOS COMMUNITY SERVICES DISTRICT

MWH Walnut Creek, California

eda design professionals
civil engineers • land surveyors • land planners
1998 santa barbara st • san luis obispo, ca 93401
ph: 805/549-8658 • email: eda@edainc.com

LOS OSOS WASTEWATER PROJECT
PLAN AND PROFILE – FM
DONNA AVENUE
STA. 10+68.32 TO STA. 14+60.32

SHEET B-PP-167

JOB NO. 1481166

K:\22650000\base\EDA-Work\FM Sheets\167-FM-LUPINE-LS-SHT1.dwg 2/04/04 08:32 AM kathys

SEE SHEET B-PP-167
FOR CONTINUATION

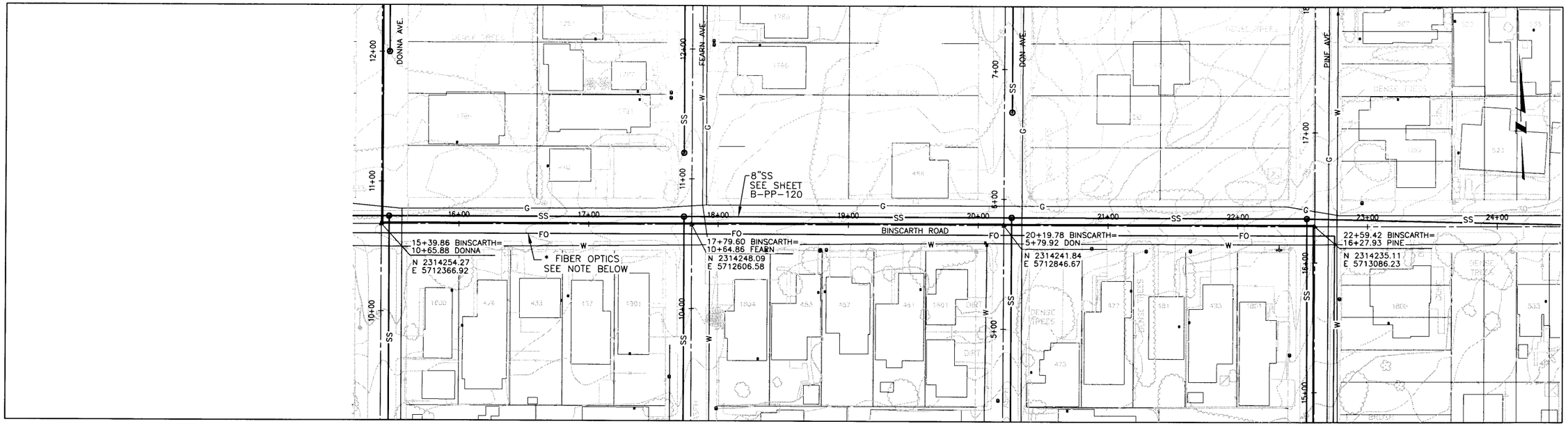

SEE SHEET B-PP-169
FOR CONTINUATION

LUPINE FORCE MAIN PLAN ON BINSCARTH

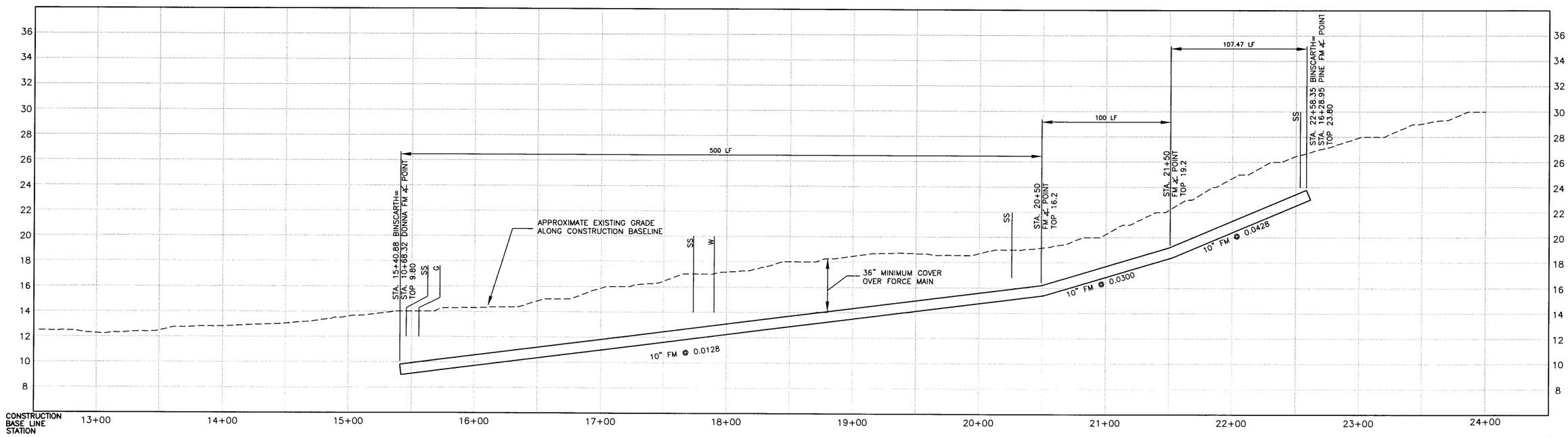

LUPINE FORCE MAIN PROFILE ON BINSCARTH

NOTES:

1.
2.
3.

*NOTE:

ACTUAL LOCATION OF FIBER OPTICS FACILITIES OWNED BY CHARTER COMM. IS UNKNOWN. HORIZONTAL AND VERTICAL LOCATION SHALL BE VERIFIED BY THE CONTRACTOR PRIOR TO CONSTRUCTION.

DIGALERT
DIAL TOLL FREE
1-800-642-2444
AT LEAST TWO DAYS BEFORE YOU DIG
UNDERGROUND SERVICE ALERT OF NORTHERN CALIFORNIA

REGISTERED PROFESSIONAL ENGINEER
JEFFREY J. BERGEN
No. 40,657
Expires 3/03
CIVIL
STATE OF CALIFORNIA

REV	DATE	BY	DESCRIPTION

SCALE
HORIZ. 1"=40'
VERT. 1"=4'

WARNING
0 1/2 1
IF THIS BAR DOES NOT MEASURE 1" THEN DRAWING IS NOT TO SCALE

DESIGNED SH
DRAWN KS/JM/AF/BF
CHECKED SH

SUBMITTED BY
JOHN A. BERGEN — C31069 — LICENSE NO. — 02/16/04 — DATE
STEVE J. HYLAND — C23892 — LICENSE NO. — 02/16/04 — DATE

LOS OSOS
COMMUNITY SERVICES DISTRICT

MWH
Walnut Creek, California

eda design professionals
civil engineers • land surveyors • land planners
1968 santa barbara st. • san luis obispo, ca 93401
ph: 805/549-8658 • email: eda@eda-inc.com

LOS OSOS WASTEWATER PROJECT
PLAN AND PROFILE – FM
BINSCARTH ROAD
STA. 15+40.88 TO STA. 22+58.00

SHEET
B-PP-168

JOB NO. 1481166

K:\2025000\base\EDA-Work\FM Sheets\168-FM-Binscarth-SHT2.dwg 2/02/04 08:13 AM kathys

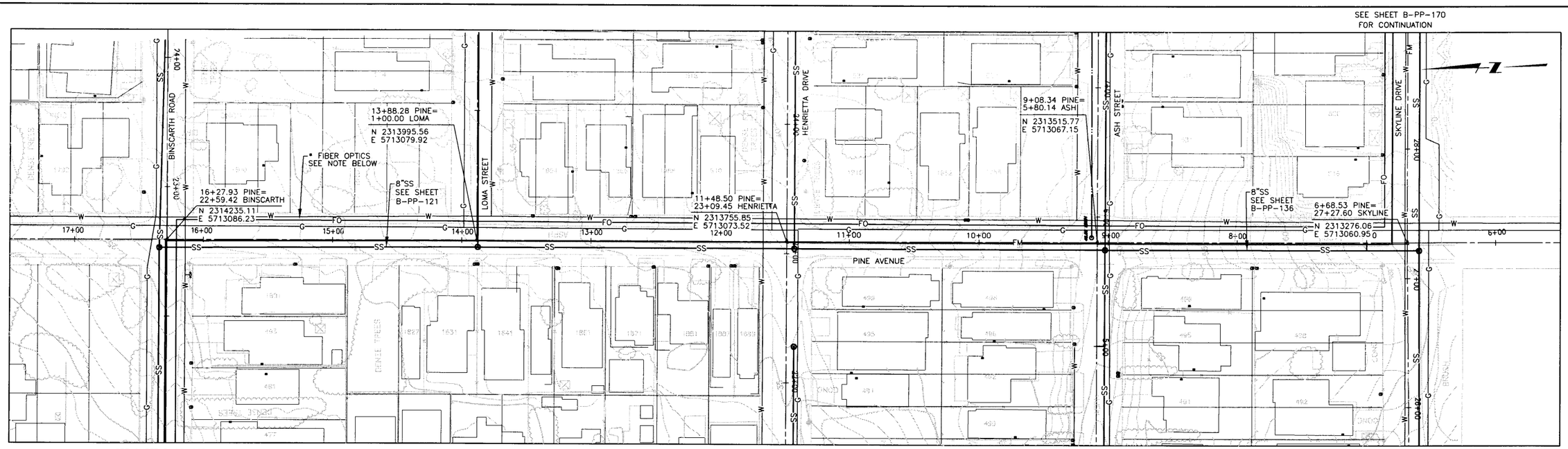

LUPINE FORCE MAIN PLAN ON PINE

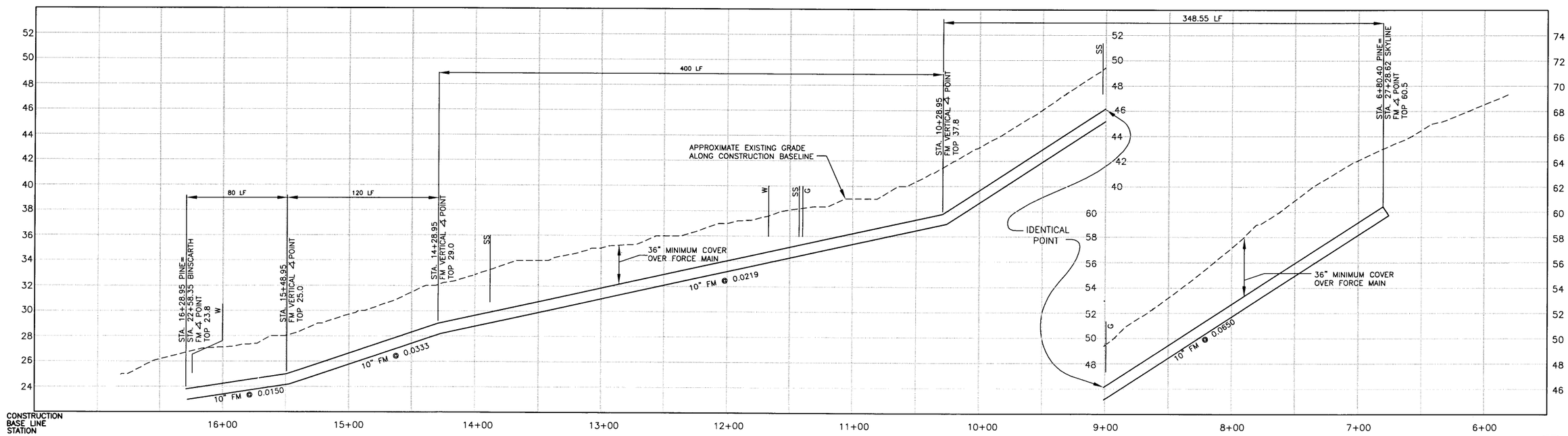

LUPINE FORCE MAIN PROFILE ON PINE

NOTES:

1.
2.
3.

*NOTE:

ACTUAL LOCATION OF FIBER OPTICS FACILITIES OWNED BY CHARTER COMM. IS UNKNOWN. HORIZONTAL AND VERTICAL LOCATION SHALL BE VERIFIED BY THE CONTRACTOR PRIOR TO CONSTRUCTION.

DIGALERT
DIAL TOLL FREE
1-800-642-2444
AT LEAST TWO DAYS BEFORE YOU DIG
UNDERGROUND SERVICE ALERT OF NORTHERN CALIFORNIA

REGISTERED PROFESSIONAL ENGINEER
JEFFREY J. BARICK
C.E. No. 40,657
Expires 3/07
CIVIL ENGINEER
STATE OF CALIFORNIA

REV	DATE	BY	DESCRIPTION

SCALE
HORZ: 1"=40'
VERT: 1"= 4'

WARNING
0 1/2 1
IF THIS BAR DOES NOT MEASURE 1" THEN DRAWING IS NOT TO SCALE

DESIGNED SH/GH
DRAWN KS/JM/AF/BF
CHECKED SH

SUBMITTED BY
JOHN A. BERGEN — C31069 — LICENSE NO. — 02/16/04 — DATE
STEVE J. HYLAND — C23892 — LICENSE NO. — 02/16/04 — DATE

LOS OSOS
COMMUNITY SERVICES DISTRICT

MWH
Walnut Creek, California

eda design professionals
civil engineers • land surveyors • land planners
1998 santa barbara st • san luis obispo, ca 93401
ph: 805/549-8658 • email: eda@edainc.com

LOS OSOS WASTEWATER PROJECT
PLAN AND PROFILE
PINE AVENUE
STA 6+80.40 TO STA 16+28.95

SHEET
B-PP-169

JOB NO. 1481166

A:\32650000\base\DA-Work\FM Sheets\169-FM-Pine-Sht3.dwg 2/05/04 08:18 AM kathys

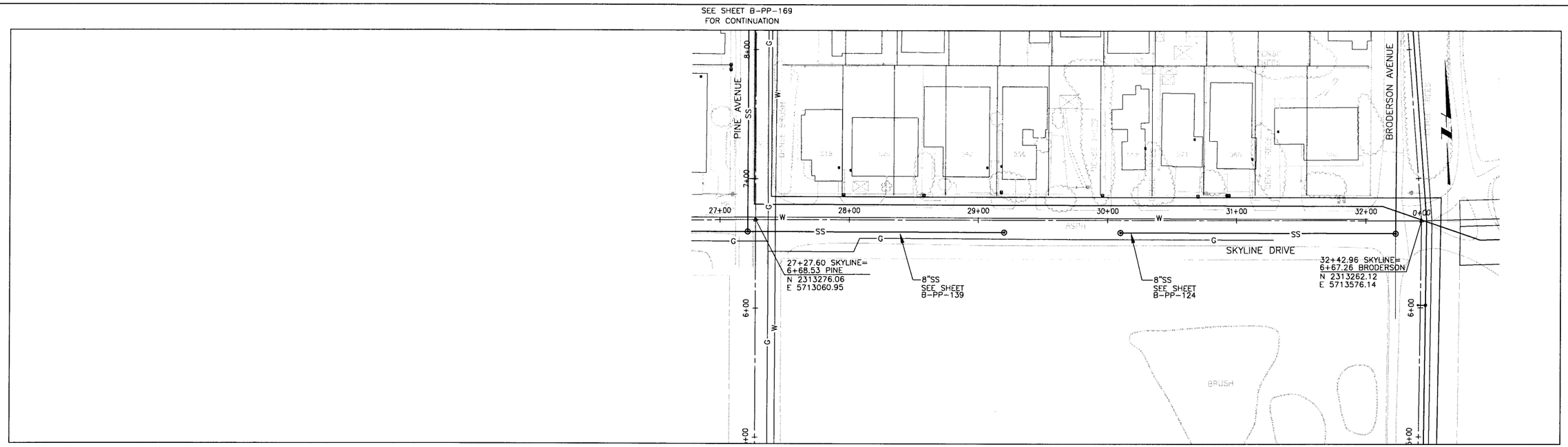

LUPINE FORCE MAIN PLAN ON SKYLINE

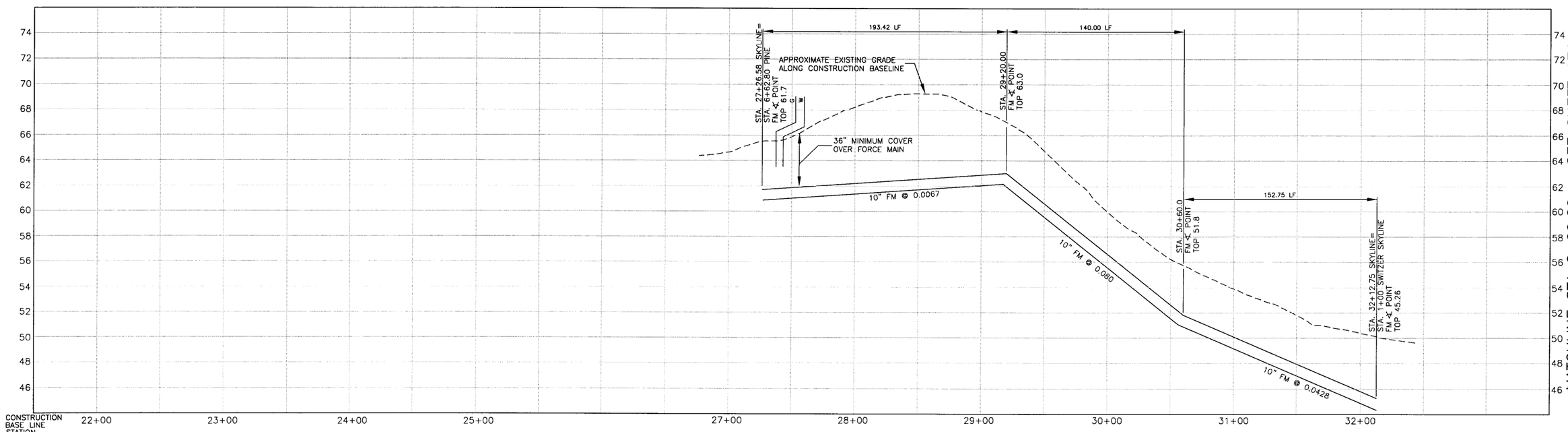

LUPINE FORCE MAIN PROFILE ON SKYLINE

NOTES:

1.
2.
3.

DIGALERT
DIAL TOLL FREE
1-800-642-2444
AT LEAST TWO DAYS
BEFORE YOU DIG
UNDERGROUND SERVICE ALERT OF NORTHERN CALIFORNIA

REGISTERED PROFESSIONAL ENGINEER
JEFFREY J. EMRICK
Lic. No. 40,657
Expires 3/03
CIVIL
STATE OF CALIFORNIA

REV	DATE	BY	DESCRIPTION

SCALE
HORIZ. 1"=40'
VERT. 1"=4'

WARNING
0 1/2 1
IF THIS BAR DOES NOT MEASURE 1" THEN DRAWING IS NOT TO SCALE

DESIGNED SH
DRAWN KS/JM/AF/BF
CHECKED SH

SUBMITTED BY
JOHN A. BERGEN — C31069 LICENSE NO. — 02/16/04 DATE
STEVE J. HYLAND — C23892 LICENSE NO. — 02/16/04 DATE

LOS OSOS
COMMUNITY SERVICES DISTRICT

MWH
Walnut Creek, California

eda design professionals
civil engineers • land surveyors • land planners
1998 santa barbara st • san luis obispo, ca 93401
ph: 805/549-8658 • email: eda@edainc.com

LOS OSOS WASTEWATER PROJECT
PLAN AND PROFILE – FM
SKYLINE DRIVE
STA. 27+26.58 TO STA. 32+12.75

SHEET
B-PP-170

JOB NO. 1481166

K:\22650000\base\EDA-Work\FM Sheets\170-FM-SKYLINE-SHT4.dwg 2/05/04 09:53 AM shawnag

MATCHLINE STA 1+00.00 – SEE SHEET B-PP-170 FOR CONTINUATION

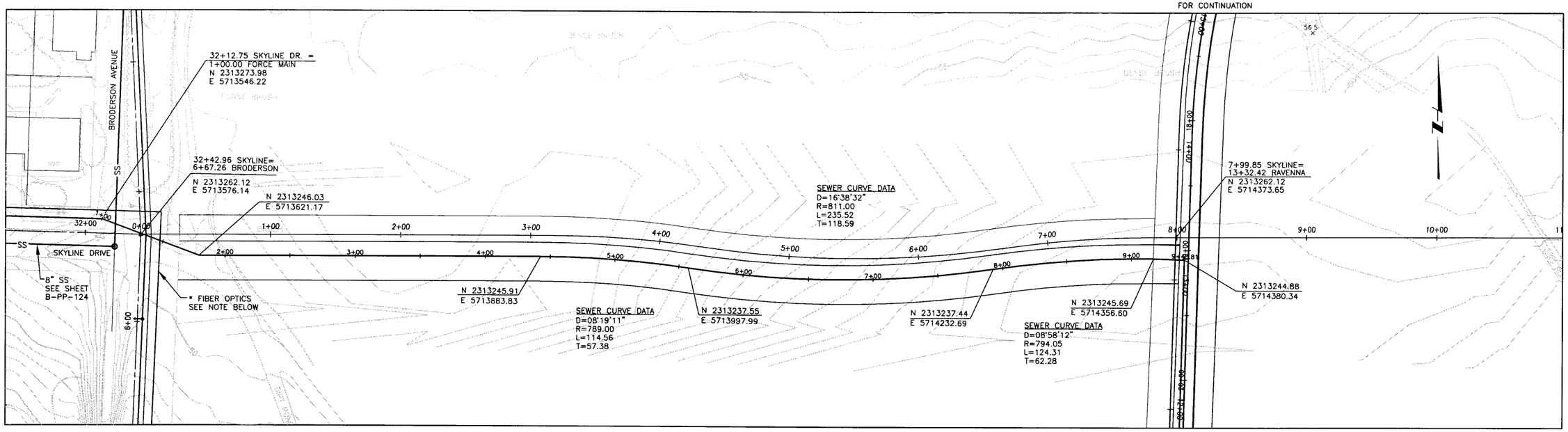

LUPINE FORCE MAIN PLAN ON SKYLINE

MATCHLINE STA 1+00.00 – SEE SHEET B-PP-170 FOR CONTINUATION

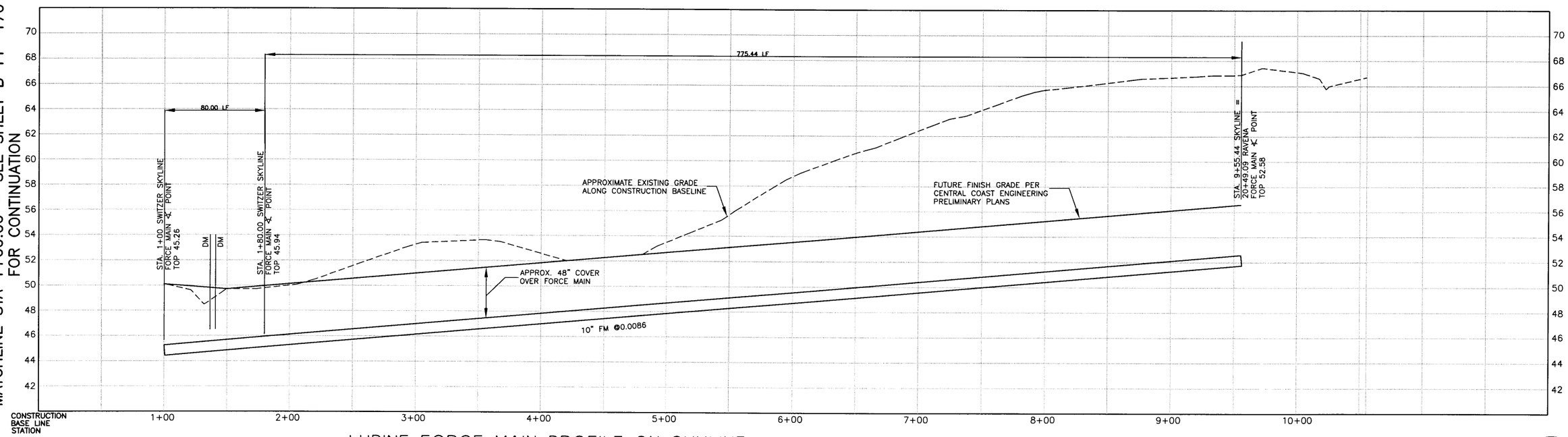

LUPINE FORCE MAIN PROFILE ON SKYLINE

NOTES:

1.
2.
3.

*NOTE:

ACTUAL LOCATION OF FIBER OPTICS FACILITIES OWNED BY CHARTER COMM. IS UNKNOWN. HORIZONTAL AND VERTICAL LOCATION SHALL BE VERIFIED BY THE CONTRACTOR PRIOR TO CONSTRUCTION.

DIGALERT
DIAL TOLL FREE
1-800-642-2444
AT LEAST TWO DAYS BEFORE YOU DIG
UNDERGROUND SERVICE ALERT OF NORTHERN CALIFORNIA

REGISTERED PROFESSIONAL ENGINEER JEFFREY J. EARLE No. 40,657 Expires 3/05 CIVIL STATE OF CALIFORNIA

REV	DATE	BY	DESCRIPTION

SCALE: HORIZ. 1"=40' VERT. 1"=4'

WARNING: 0 1/2 1 — IF THIS BAR DOES NOT MEASURE 1" THEN DRAWING IS NOT TO SCALE

DESIGNED SH
DRAWN KS/JM/AF/BF
CHECKED SH

SUBMITTED BY
JOHN A. BERGEN — C31069 LICENSE NO. — 02/16/04 DATE
STEVEN J. HYLAND — C23892 LICENSE NO. — 02/16/04 DATE

LOS OSOS COMMUNITY SERVICES DISTRICT

MWH Walnut Creek, California

eda design professionals — civil engineers • land surveyors • land planners — 1998 santa barbara st • san luis obispo, ca 93401 — ph: 805/549-8658 • email: eda@edainc.com

LOS OSOS WASTEWATER PROJECT
PLAN AND PROFILE – FM
LUPINE FORCE MAIN
STA. 1+00.00 TO STA. 9+55.44

SHEET B-PP-171

JOB NO. 1481166

K:\2765/2000\Loso\EDA-Work\Fig Sheets\71-Fig-Skyline-Sht15.dwg 2/05/04 11:01 AM kathys

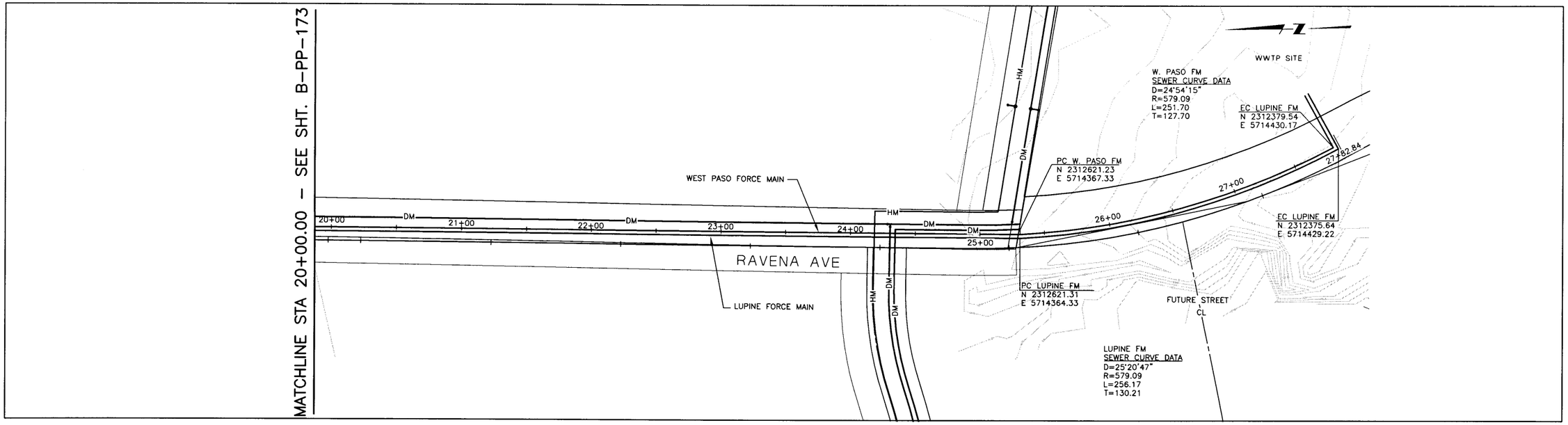

LUPINE AND WEST PASO FORCE MAIN PLAN ON RAVENA

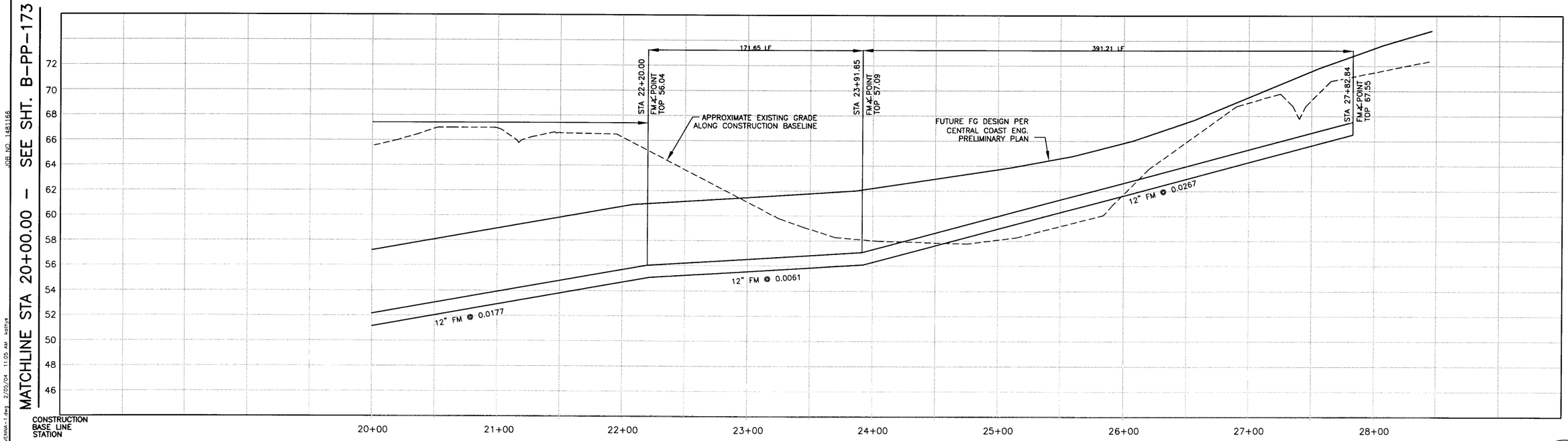

LUPINE AND WEST PASO FORCE MAIN PROFILE ON RAVENA

NOTES:
1.
2.
3.

DIGALERT
DIAL TOLL FREE
1-800-642-2444
AT LEAST TWO DAYS BEFORE YOU DIG
UNDERGROUND SERVICE ALERT OF NORTHERN CALIFORNIA

REGISTERED PROFESSIONAL ENGINEER
JEFFREY J. EMRICK
Lic. No. 40,657
Expires 3/03
STATE OF CALIFORNIA

REV	DATE	BY	DESCRIPTION

SCALE
HORIZ. 1"=40'
VERT. 1"=4'

WARNING
0 1/2 1
IF THIS BAR DOES NOT MEASURE 1" THEN DRAWING IS NOT TO SCALE

DESIGNED SH
DRAWN KS/JM/AF/BF
CHECKED SH

SUBMITTED BY
John A. Bergen — C31069 LICENSE NO. — 02/16/04 DATE
Steven J. Hyland — C23892 LICENSE NO. — 02/16/04 DATE

LOS OSOS
COMMUNITY SERVICES DISTRICT

MWH
Walnut Creek, California

eda design professionals
civil engineers • land surveyors • land planners
1998 santa barbara st • san luis obispo, ca 93401
ph: 805/549-8658 • email: eda@edainc.com

LOS OSOS WASTEWATER PROJECT
PLAN AND PROFILE – FM
RAVENNA AVENUE
STA 20+00.00 TO 27+82.84

SHEET
B-PP-172

JOB NO. 1481166
K:\22650000\base\EDA-Work\FM Sheets\172-FM-RAVENNA-1.dwg 2/05/04 11:05 AM kathys

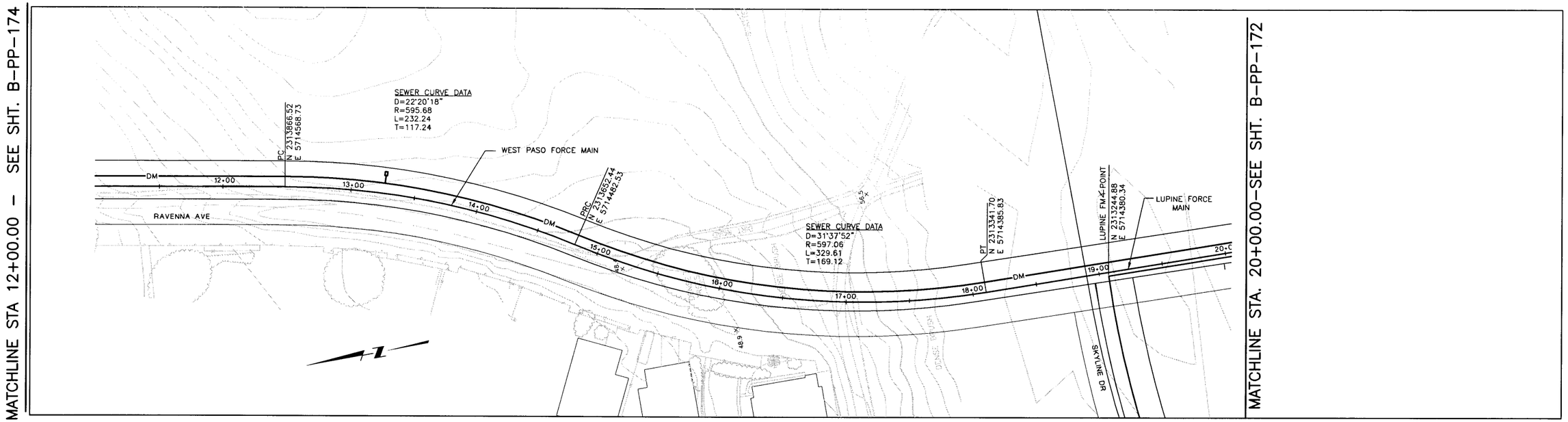

SEE SHEET B-PP-171 FOR CONTINUATION

WEST PASO FORCE MAIN PLAN ON RAVENA

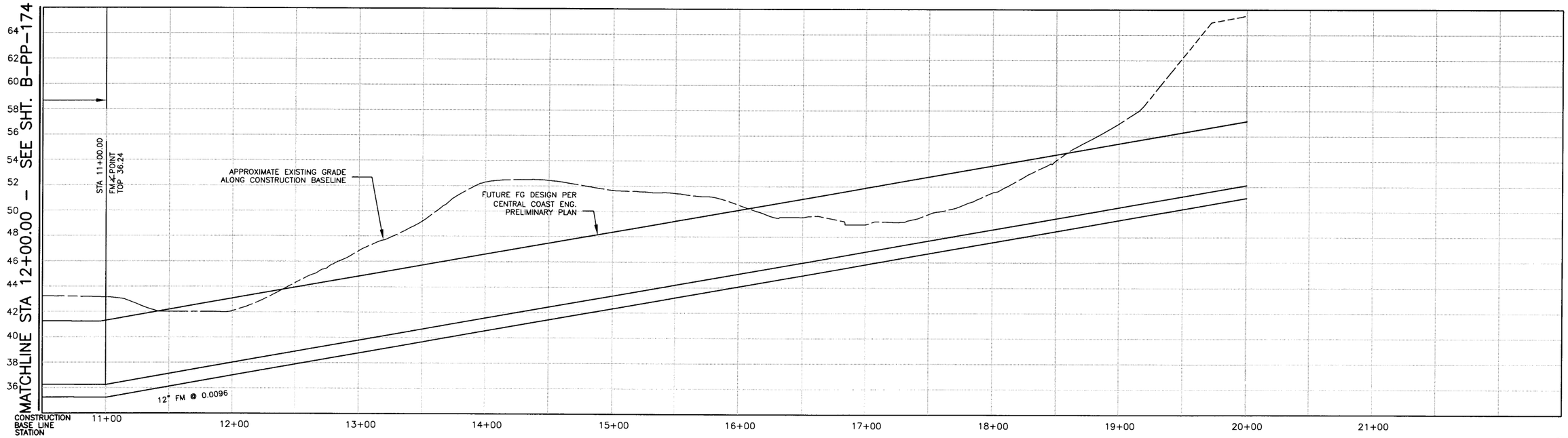

WEST PASO FORCE MAIN PROFILE ON RAVENA

NOTES:

1.
2.
3.

DIGALERT
DIAL TOLL FREE
1-800-642-2444
AT LEAST TWO DAYS BEFORE YOU DIG
UNDERGROUND SERVICE ALERT OF NORTHERN CALIFORNIA

REGISTERED PROFESSIONAL ENGINEER
JEFFREY J. EMRICK
No. 40,657
Expires 3/03
CIVIL
STATE OF CALIFORNIA

REV	DATE	BY	DESCRIPTION

SCALE: HORIZ. 1"=40' VERT. 1"=4'

WARNING: 0 1/2 1 — IF THIS BAR DOES NOT MEASURE 1" THEN DRAWING IS NOT TO SCALE

DESIGNED SH
DRAWN KS/JM/AF/BF
CHECKED SH

SUBMITTED BY
John A. Bergen — C31069 LICENSE NO. — 02/16/04 DATE
Steven J. Hyland — C23892 LICENSE NO. — 02/16/04 DATE

LOS OSOS COMMUNITY SERVICES DISTRICT

MWH Walnut Creek, California

eda design professionals
civil engineers • land surveyors • land planners
1998 santa barbara st • san luis obispo, ca 93401
ph: 805/549-8658 • email: eda@edainc.com

LOS OSOS WASTEWATER PROJECT
PLAN AND PROFILE – FM
RAVENNA AVENUE
STA 11+00.00 TO 20+00.00

SHEET B-PP-173

JOB NO. 1481166

K:\22650000\base\EDA-Work\FM Sheets\173-FM-RAVENNA-2.dwg 2/05/04 11:15 AM kathys

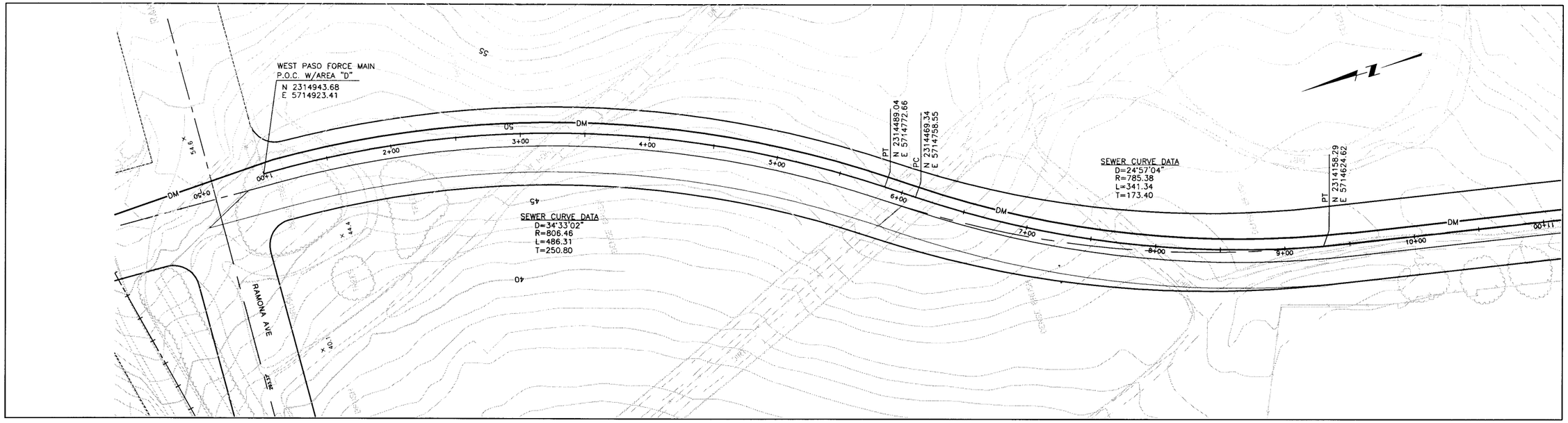

WEST PASO FORCE MAIN PLAN ON RAVENA

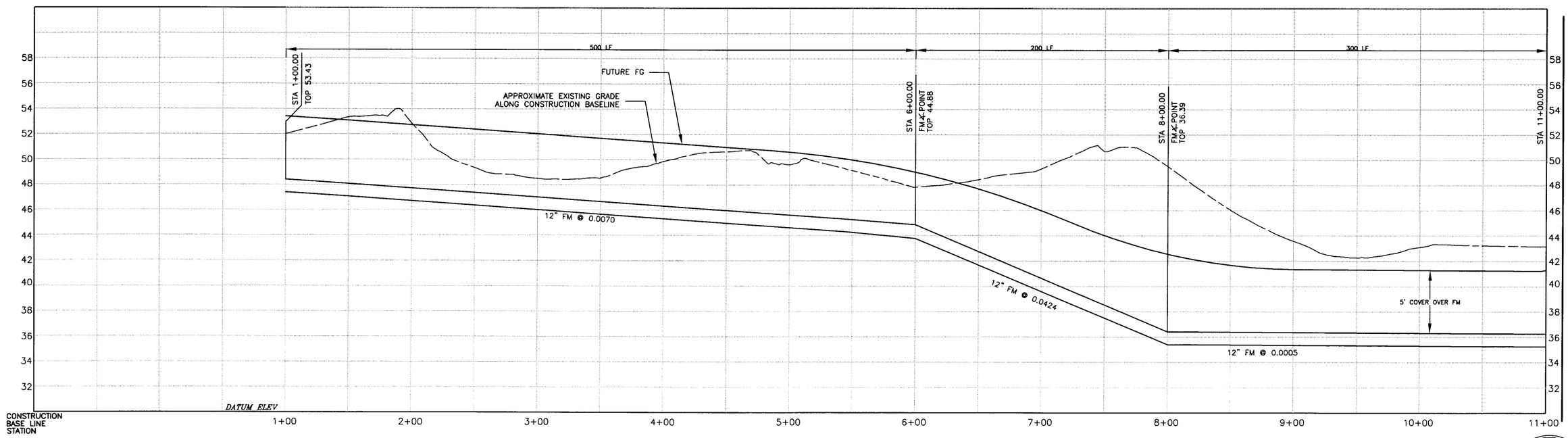

WEST PASO FORCE MAIN PROFILE ON RAVENA

MATCHLINE STA 11+00 – SEE SHT. B-PP-173

MATCHLINE STA 11+00 – SEE SHT. B-PP-173

NOTES:

1.
2.
3.

DIGALERT
DIAL TOLL FREE
1-800-642-2444
AT LEAST TWO DAYS BEFORE YOU DIG
UNDERGROUND SERVICE ALERT OF NORTHERN CALIFORNIA

REGISTERED PROFESSIONAL ENGINEER
JEFFREY J. EMRICK
Lic. No. 40,657
Expires 3/03
CIVIL
STATE OF CALIFORNIA

REV	DATE	BY	DESCRIPTION

SCALE
HORIZ. 1"=40'
VERT. 1"=4'

WARNING
0 1/2 1
IF THIS BAR DOES NOT MEASURE 1" THEN DRAWING IS NOT TO SCALE

DESIGNED SH
DRAWN KS/JM/AF/BF
CHECKED SH

SUBMITTED BY
JOHN A. BERGEN — C31069 LICENSE NO. — 02/16/04 DATE
STEVE J. HYLAND — C23892 LICENSE NO. — 02/16/04 DATE

LOS OSOS
COMMUNITY SERVICES DISTRICT

MWH
Walnut Creek, California

eda design professionals
civil engineers • land surveyors • land planners
1998 santa barbara st • san luis obispo, ca 93401
ph. 805/549-8658 • email: eda@edainc.com

LOS OSOS WASTEWATER PROJECT
PLAN AND PROFILE – FM
RAVENNA AVENUE
STA 1+00.00 TO 11+00.00

SHEET
B-PP-174

JOB NO. 1481166

K:\22650000\base\EDA-Work\FM Sheets\174-FM-RAVENNA-3.dwg 2/05/04 11:19 AM kathys

SEE SHEET B-PP-100
FOR CONTINUATION

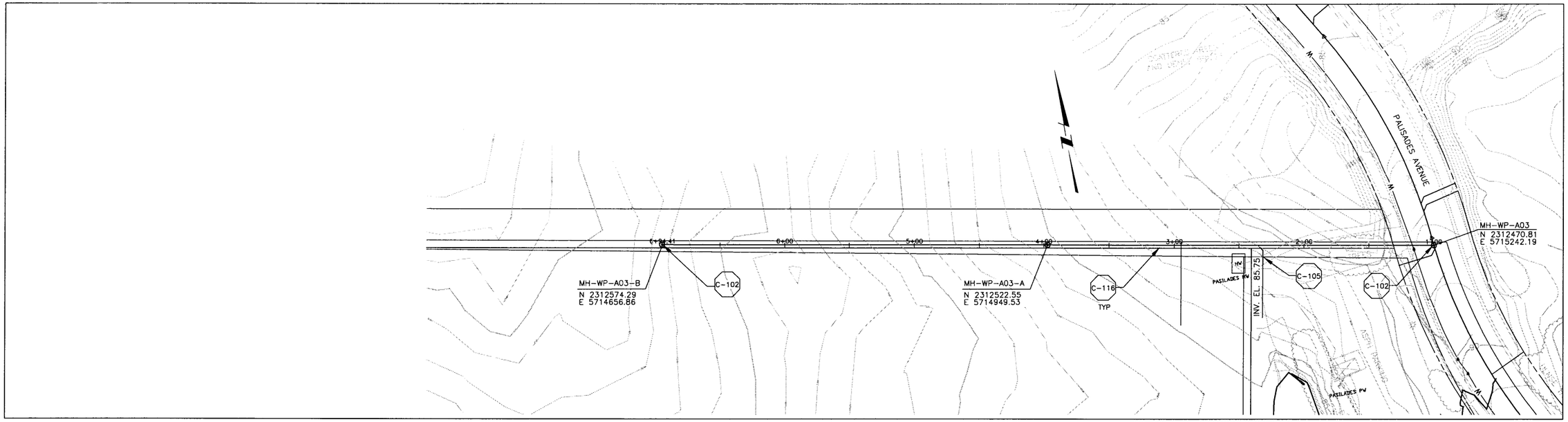

PLAN ON PALISADES AVENUE EXTENSION

SEE SHEET B-PP-100
FOR CONTINUATION

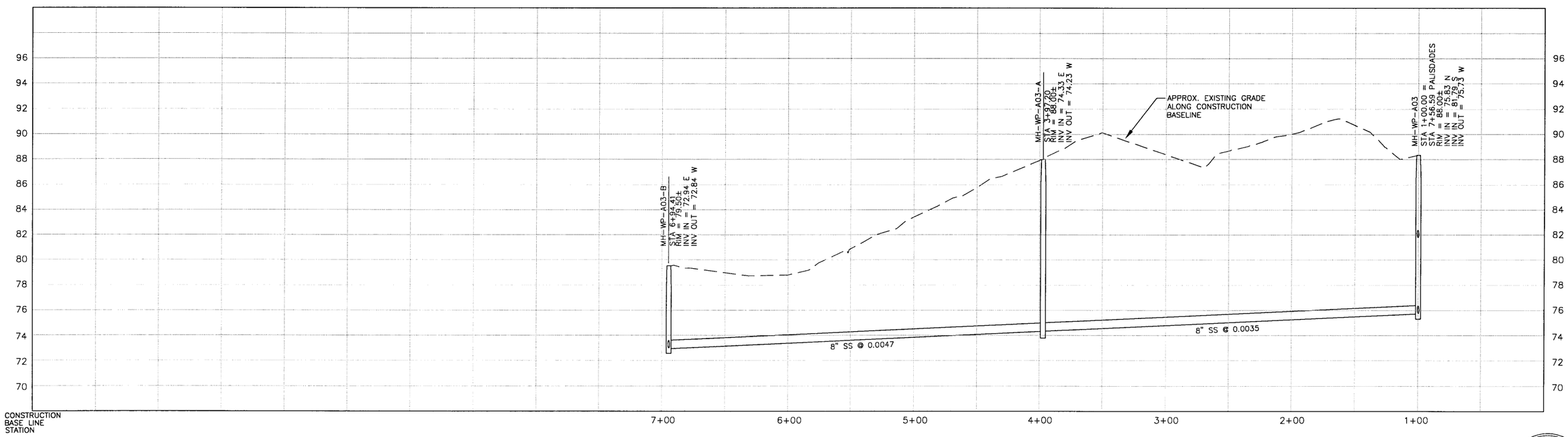

PROFILE ON PALISADES AVENUE EXTENSION

NOTES:
1.
2.
3.

DIGALERT
DIAL TOLL FREE
1-800-642-2444
AT LEAST TWO DAYS BEFORE YOU DIG
UNDERGROUND SERVICE ALERT OF NORTHERN CALIFORNIA

REGISTERED PROFESSIONAL ENGINEER
JEFFREY J. EMRICK
Lic. No. 40,657
Expires 3/07
STATE OF CALIFORNIA

REV	DATE	BY	DESCRIPTION

SCALE
HORZ: 1"=40'
VERT: 1"= 4'

WARNING
0 1/2 1
IF THIS BAR DOES NOT MEASURE 1" THEN DRAWING IS NOT TO SCALE

DESIGNED SH/GH
DRAWN KS/JM/AF/BF
CHECKED SH

SUBMITTED BY
JOHN A. BERGEN — C31069 — LICENSE NO. — 02/16/04 — DATE
STEVE J. HYLAND — C23892 — LICENSE NO. — 02/16/04 — DATE

LOS OSOS
COMMUNITY SERVICES DISTRICT

MWH
Walnut Creek, California

eda design professionals
civil engineers • land surveyors • land planners
1998 santa barbara st • san luis obispo, ca 93401
ph: 805/549-8658 • email: eda@edainc.com

LOS OSOS WASTEWATER PROJECT
PLAN AND PROFILE
PALISADES AVENUE EXT.
STA 1+00.00 TO STA 6+94.41

SHEET
B-PP-175

K:\22650000\base\EDA-Work\PP-SHEETS - 100% Submittal\177 - Palisades-ext.dwg 2/05/04 09:53 AM shawnag JOB NO. 1481166

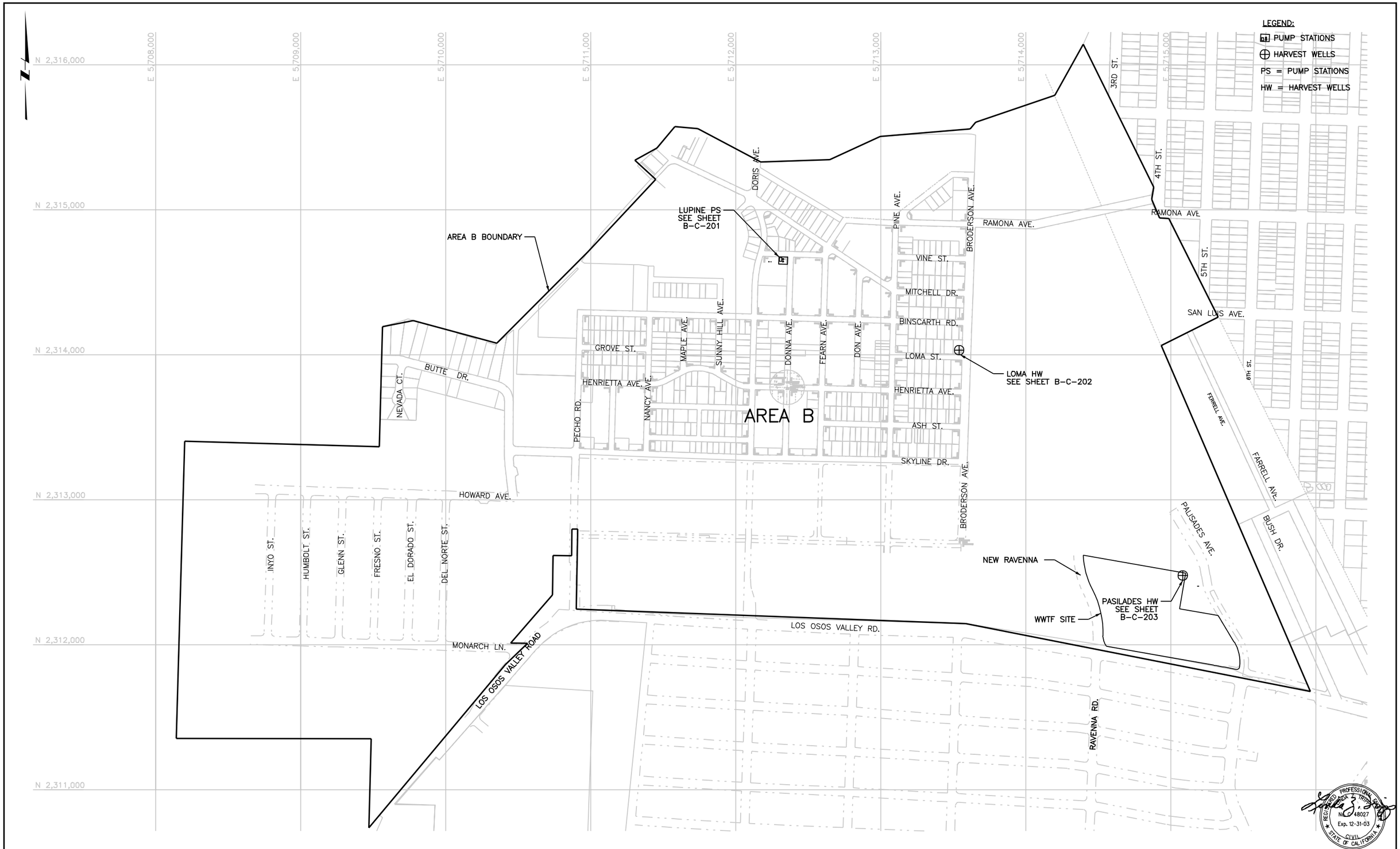

Job No: 1481166 File: N:\Projects\los_osos\Collect_Sys\PS\civ\B-C-200.dgn Plot Date: 09-FEB-2004 12:16

REV	DATE	BY	DESCRIPTION

SCALE 1"=300'

WARNING 0 1/2 1 IF THIS BAR DOES NOT MEASURE 1" THEN DRAWING IS NOT TO SCALE

DESIGNED M RACKOW
DRAWN M RACKOW
CHECKED R BUI

SUBMITTED BY
JOHN A. BERGEN — C31069 LICENSE NO. — 2/16/2004 DATE
STEVE J. HYLAND — C23892 LICENSE NO. — 2/16/2004 DATE

DIGALERT DIAL TOLL FREE 1-800-642-2444 AT LEAST TWO DAYS BEFORE YOU DIG UNDERGROUND SERVICE ALERT OF NORTHERN CALIFORNIA

LOS OSOS COMMUNITY SERVICES DISTRICT

MWH Walnut Creek, California

LOS OSOS WASTEWATER PROJECT

CIVIL
AREA B KEY PLAN

SHEET B-C-200

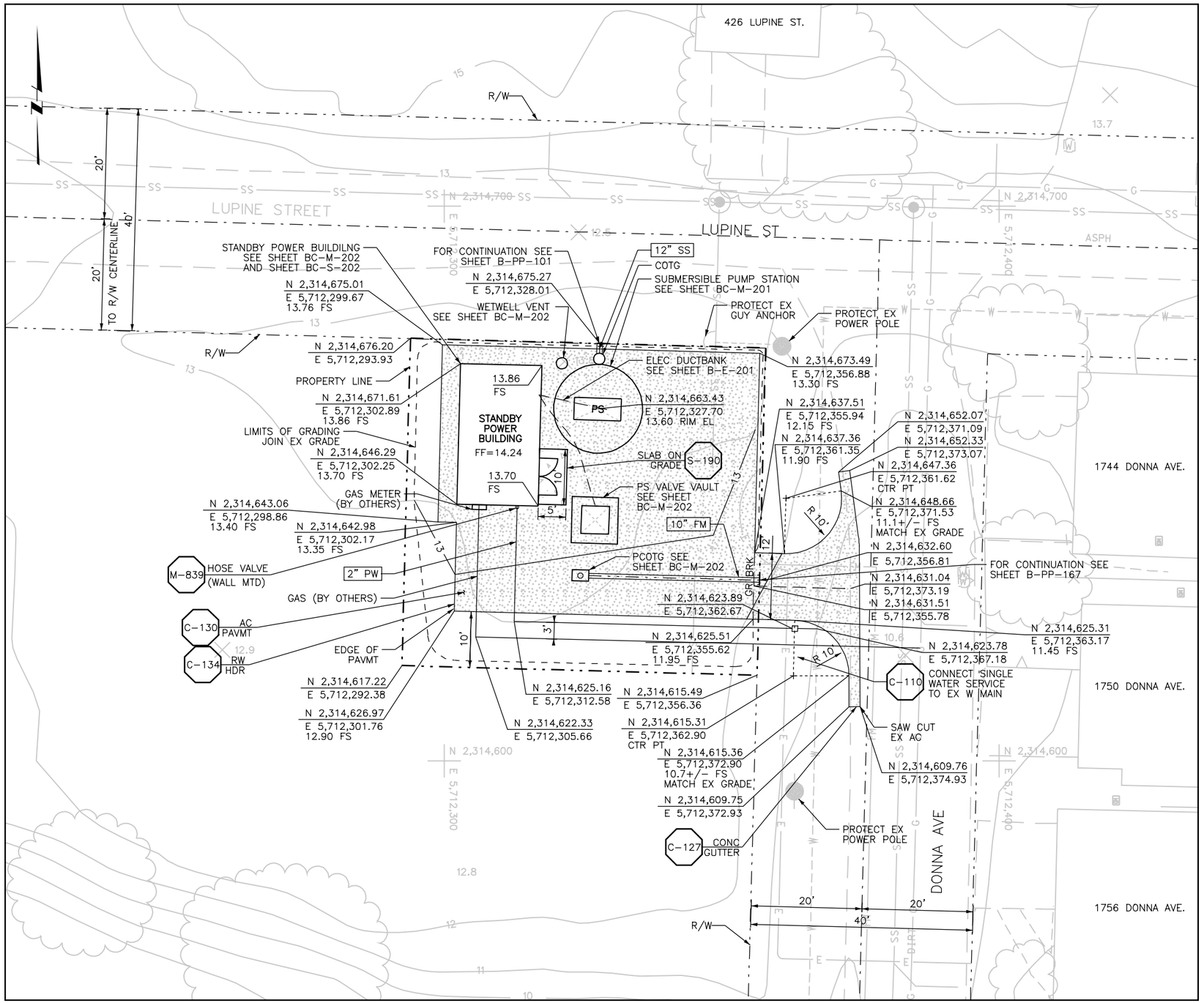

LUPINE PS SITE PLAN

NOTES:

1. LIDS AND VAULTS TO BE TRAFFIC RATED FOR H-20 LOADING
2. COORDINATE ELECTRICAL DUCTBANK DEPTH AND LOCATION BEFORE INSTALLATION OF PROCESS PIPING. SEE SHEET B-E-201.
3. CONTRACTOR SHALL COORDINATE AND SCHEDULE GAS LINE CONNECTION AND INSTALLATION WITH PACIFIC GAS AND ELECTRIC.

REGISTERED PROFESSIONAL ENGINEER
LINDA J. TRIPP
No. C 48027
Exp. 12-31-05
CIVIL
STATE OF CALIFORNIA

REV	DATE	BY	DESCRIPTION

SCALE: 1"=10'

WARNING: 0 1/2 1 — IF THIS BAR DOES NOT MEASURE 1" THEN DRAWING IS NOT TO SCALE

DESIGNED M RACKOW
DRAWN M RACKOW
CHECKED R BUI

SUBMITTED BY
JOHN A. BERGEN — C31069 — LICENSE NO. — 2/16/2004 — DATE
STEVE J. HYLAND — C23892 — LICENSE NO. — 2/16/2004 — DATE

DIGALERT — DIAL TOLL FREE 1-800-642-2444 — AT LEAST TWO DAYS BEFORE YOU DIG — UNDERGROUND SERVICE ALERT OF NORTHERN CALIFORNIA

LOS OSOS COMMUNITY SERVICES DISTRICT

MWH Walnut Creek, California

LOS OSOS WASTEWATER PROJECT
CIVIL
LUPINE PS & STANDBY POWER SITE PLAN

SHEET B-C-201

Job No: 1481166 File: N:\Projects\los_osos\Collect_Sys\PS\civ\B-C-201.dgn Plot Date: 09-FEB-2004 12:16

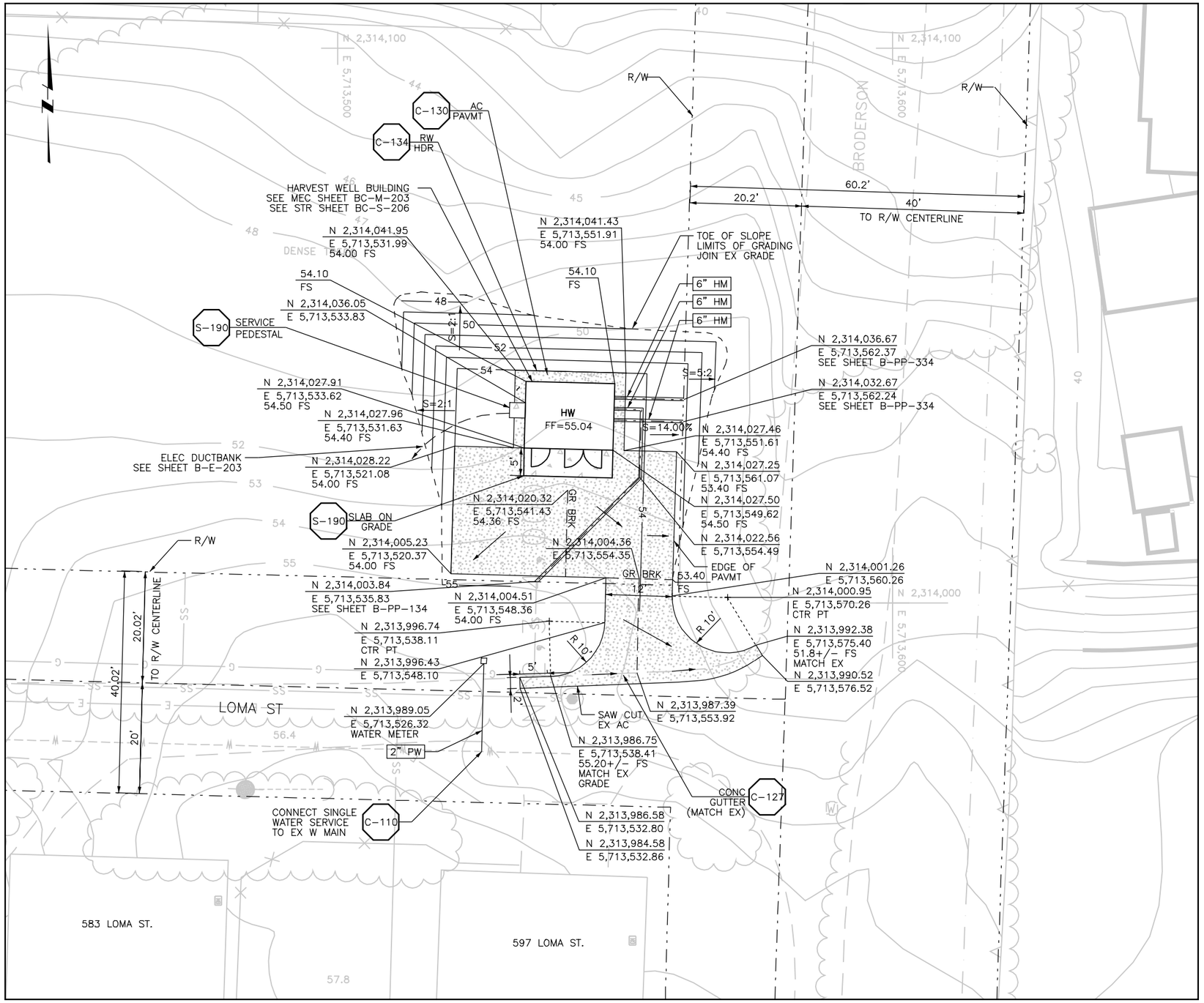

NOTES:

1. LIDS AND VAULTS TO BE TRAFFIC RATED FOR H-20 LOADING
2. COORDINATE ELECTRICAL DUCTBANK DEPTH AND LOCATION BEFORE INSTALLATION OF PROCESS PIPING. SEE SHEET B-E-203.
3. CONTRACTOR SHALL COORDINATE AND SCHEDULE GAS LINE CONNECTION AND INSTALLATION WITH PACIFIC GAS AND ELECTRIC.

REGISTERED PROFESSIONAL ENGINEER JOHN A. BERGEN No. C 48027 Exp. 12-31-05 CIVIL STATE OF CALIFORNIA

REV	DATE	BY	DESCRIPTION

SCALE 1"=10'

WARNING 0 1/2 1 IF THIS BAR DOES NOT MEASURE 1" THEN DRAWING IS NOT TO SCALE

DESIGNED M RACKOW
DRAWN M RACKOW
CHECKED R BUI

SUBMITTED BY
JOHN A. BERGEN — C31069 LICENSE NO. — 2/16/2004 DATE
STEVE J. HYLAND — C23892 LICENSE NO. — 2/16/2004 DATE

DIGALERT DIAL TOLL FREE 1-800-642-2444 AT LEAST TWO DAYS BEFORE YOU DIG UNDERGROUND SERVICE ALERT OF NORTHERN CALIFORNIA

LOS OSOS COMMUNITY SERVICES DISTRICT

MWH Walnut Creek, California

LOS OSOS WASTEWATER PROJECT
CIVIL
LOMA HARVEST WELL SITE PLAN

SHEET B-C-202

Job No: 1481166 File: N:\Projects\los_osos\Collect_Sys\PS\civ\B-C-202.dgn Plot Date: 09-FEB-2004 12:17

NOTES:

1. LIDS AND VAULTS TO BE TRAFFIC RATED FOR H-20 LOADING.
2. COORDINATE ELECTRICAL DUCTBANK DEPTH AND LOCATION BEFORE INSTALLATION OF PROCESS PIPING. SEE SHEET B-E-206.
3. CONTRACTOR SHALL COORDINATE AND SCHEDULE GAS LINE CONNECTION AND INSTALLATION WITH PACIFIC GAS AND ELECTRIC.

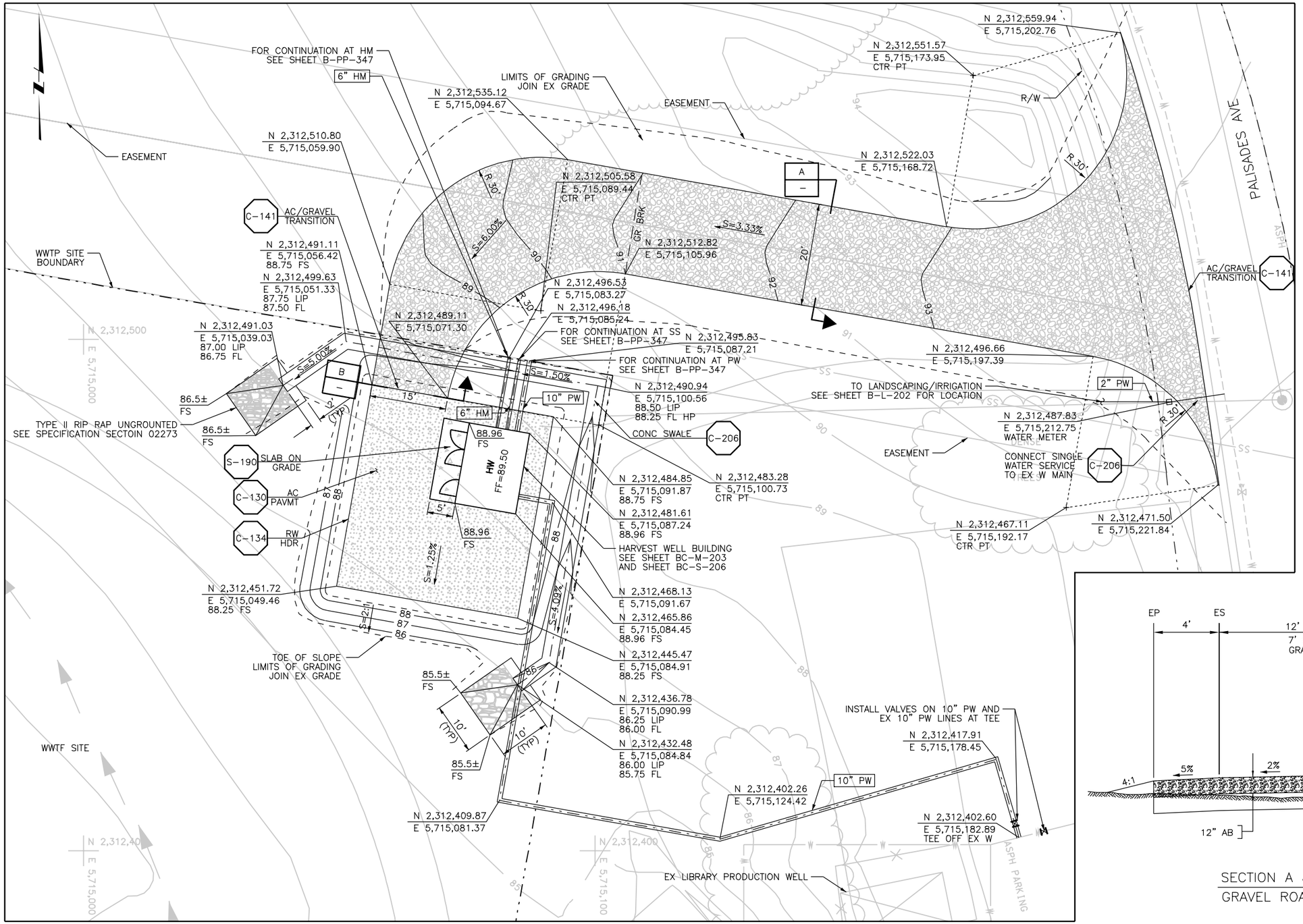

PALISADES HW

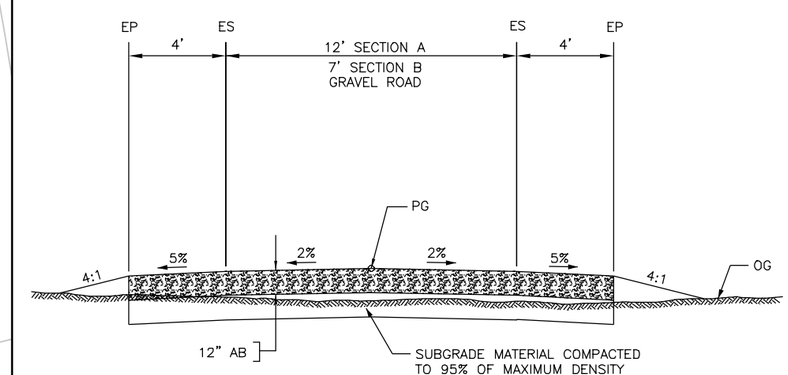

SECTION A & B — A/B

GRAVEL ROAD N.T.S. — —

REGISTERED PROFESSIONAL ENGINEER — JOHN L. TRIPP — No. 48027 — Exp. 12-31-05 — CIVIL — STATE OF CALIFORNIA

REV	DATE	BY	DESCRIPTION

SCALE: 1"=10'

WARNING: 0 1/2 1 — IF THIS BAR DOES NOT MEASURE 1" THEN DRAWING IS NOT TO SCALE

DESIGNED M RACKOW
DRAWN M RACKOW
CHECKED R BUI

SUBMITTED BY
JOHN A. BERGEN — C31069 LICENSE NO. — 2/16/2004 DATE
STEVE J. HYLAND — C23892 LICENSE NO. — 2/16/2004 DATE

DIGALERT — DIAL TOLL FREE 1-800-642-2444 AT LEAST TWO DAYS BEFORE YOU DIG — UNDERGROUND SERVICE ALERT OF NORTHERN CALIFORNIA

LOS OSOS COMMUNITY SERVICES DISTRICT

MWH Walnut Creek, California

LOS OSOS WASTEWATER PROJECT
CIVIL
PALISADES HARVEST WELL SITE PLAN

SHEET B-C-203

Job No: 1481166 File: N:\Projects\los_osos\Collect_Sys\PS\civ\B-C-203.dgn Plot Date: 09-FEB-2004 12:18

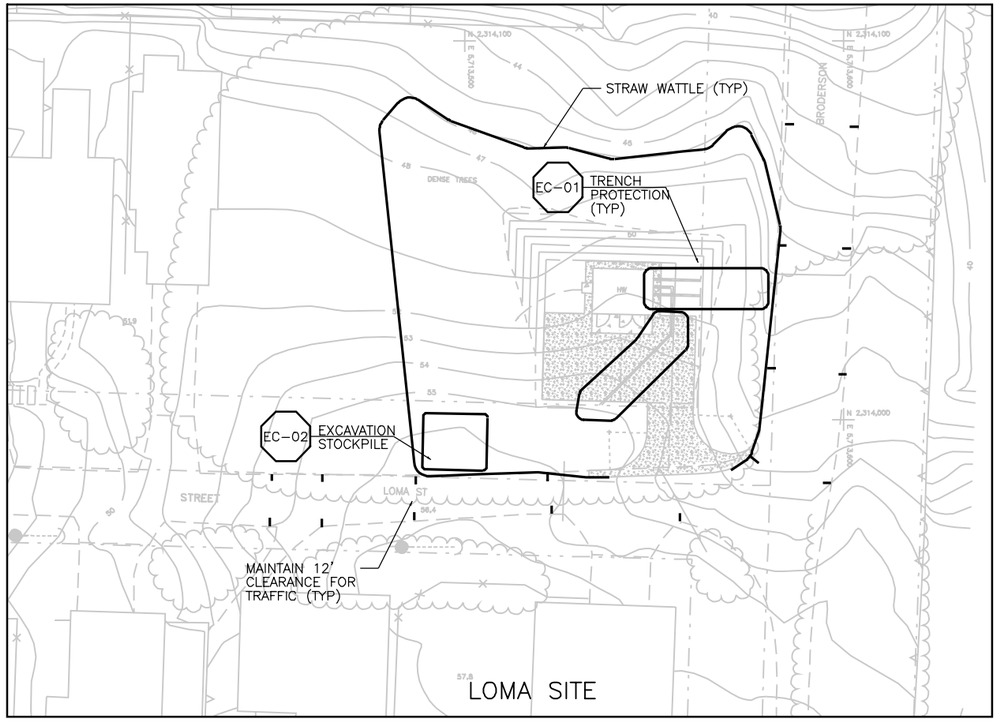

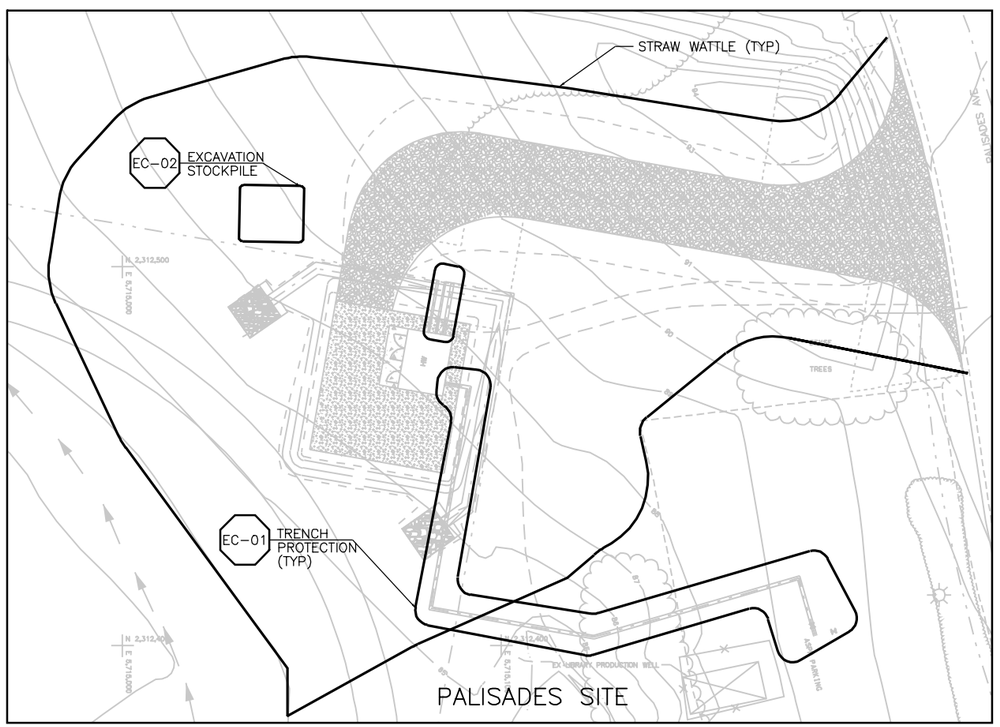

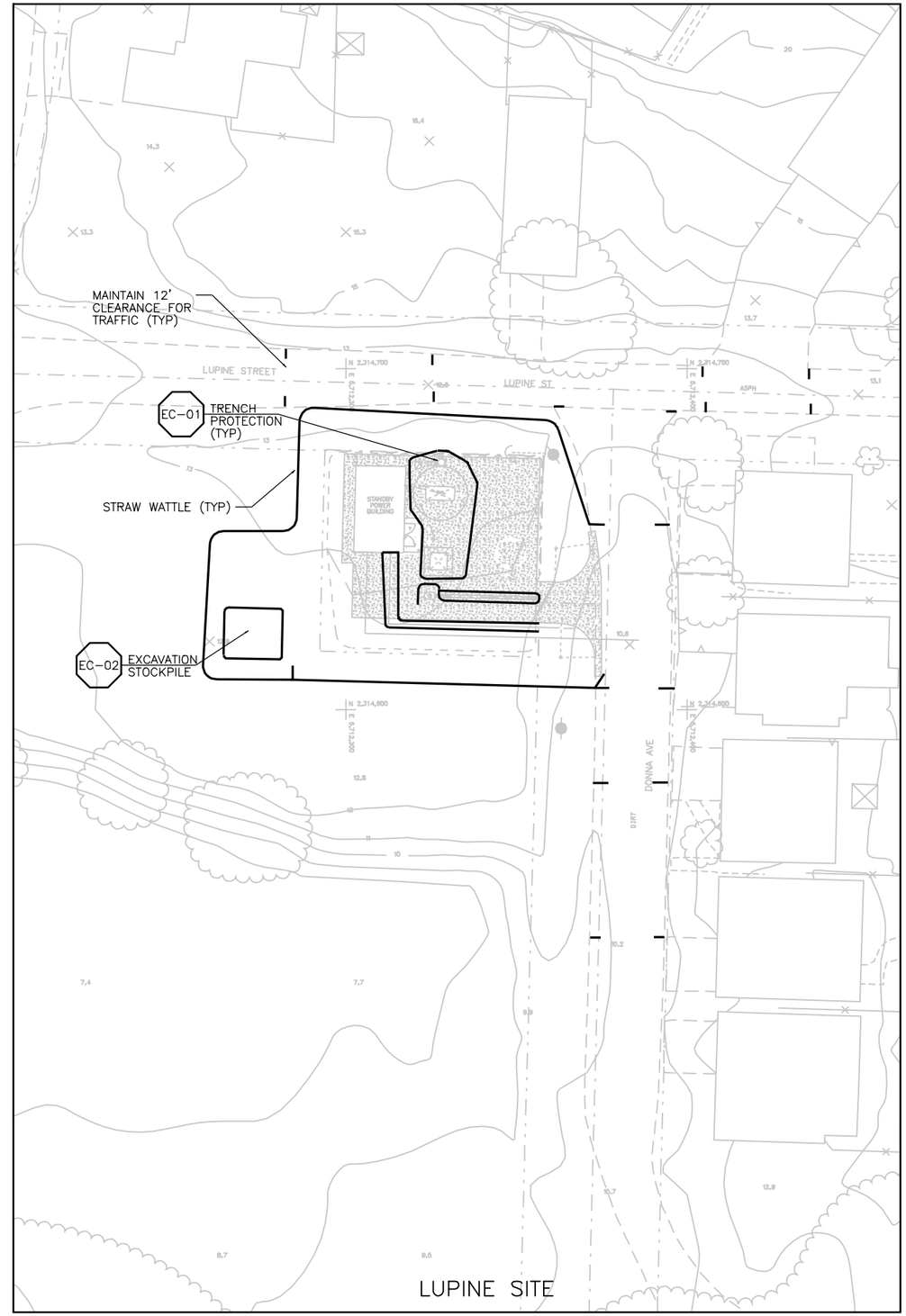

EROSION CONTROL NOTES:

1. DURING CONSTRUCTION THE CONTRACTOR MUST DIRECT ALL RUNOFF TO NON ERODIBLE LOCATIONS
2. A STANDBY CREW FOR EMERGENCY WORK SHALL BE AVAILABLE AT ALL TIMES DURING THE RAINY SEASON. NECESSSARY MATERIALS SHALL BE AVAILABLE AND STOCKPILLED AT CONVENIENT LOCATIONS TO FACILITATE RAPID CONSTRUCTION OF TEMPORARY DEVICES WHEN RAIN IS IMMINENT.
3. THE CONTRACTOR SHALL CONTROL TEMPORARY EROSION CONTROL MEASURES AS SHOWN ON THIS PLAN AND/OR AS DIRECTED BY THE ENGINEER TO CONTROL DRAINAGE WHICH HAS BEEN AFFECTED BY GRADING AND/OR TRENCHING OPERATIONS.
4. ALL PERMANENT SLOPES AND DISTURBED AREAS SHALL BE PLANTED FOR EROSION CONTROL WITH APPROVED PERENNIAL VEGETATION WHICH SHALL BE DENSE AND GROWING PRIOR TO FINAL ACCEPTANCE (SEE THE HYDROSEEDING SPECIFICATION).
5. ALL PROTECTIVE DEVICES TO BE INSTALLED SHALL BE IN PLACE AT THE END OF EACH WORK DAY WHEN THE FIVE-DAY RAIN PROBABILITY EXCEEDS 40 PERCENT.
6. AFTER A RAINSTORM, ALL SILT AND DEBRIS SHALL BE REMOVED FROM CHECK BERMS AND SEDIMENTATION BASIN AND THE BASIN PUMPED DRY.
7. THE CONTRACTOR MAY BE REQUIRED TO INSTALL AND/OR CONSTRUCT ADDITIONAL DRAINAGE STRUCTURES AS NECESSARY TO PREVENT OR CONTROL EROSION.
8. THE CONTRACTOR IS RESPONSABLE FOR CLEANING ANY EROSION OR DEBRIS SPILLING ONTO A PUBLIC STREET.
9. NO CUT OR FILL SLOPES SHALL BE STEEPER THAN 2' HORIZONTAL TO 1' VERTICAL.
10. ALL STRAW WATTLES TO BE INSTALLED PARALLEL TO GRADING CONTOURS.
11. ALSO SEE SEC. 01570 STORM WATER POLLUTION PREVENTION PLAN.

REGISTERED PROFESSIONAL ENGINEER
No. C 48027
Exp. 12-31-05
CIVIL
STATE OF CALIFORNIA

Job No: 1481166 File: N:\Projects\los_osos\Collect_Sys\PS\civ\B-C-204.dgn Plot Date: 09-FEB-2004 12:19

REV	DATE	BY	DESCRIPTION

SCALE 1"=20'

WARNING 0 1/2 1 IF THIS BAR DOES NOT MEASURE 1" THEN DRAWING IS NOT TO SCALE

DESIGNED M RACKOW
DRAWN M RACKOW
CHECKED S HYLAND

SUBMITTED BY
JOHN A. BERGEN — C31069 LICENSE NO. — 2/16/2004 DATE
STEVE J. HYLAND — C23892 LICENSE NO. — 2/16/2004 DATE

DIGALERT
DIAL TOLL FREE 1-800-642-2444 AT LEAST TWO DAYS BEFORE YOU DIG
UNDERGROUND SERVICE ALERT OF NORTHERN CALIFORNIA

LOS OSOS COMMUNITY SERVICES DISTRICT

MWH Walnut Creek, California

LOS OSOS WASTEWATER PROJECT
CIVIL
EROSION CONTROL PLAN

SHEET B-C-204

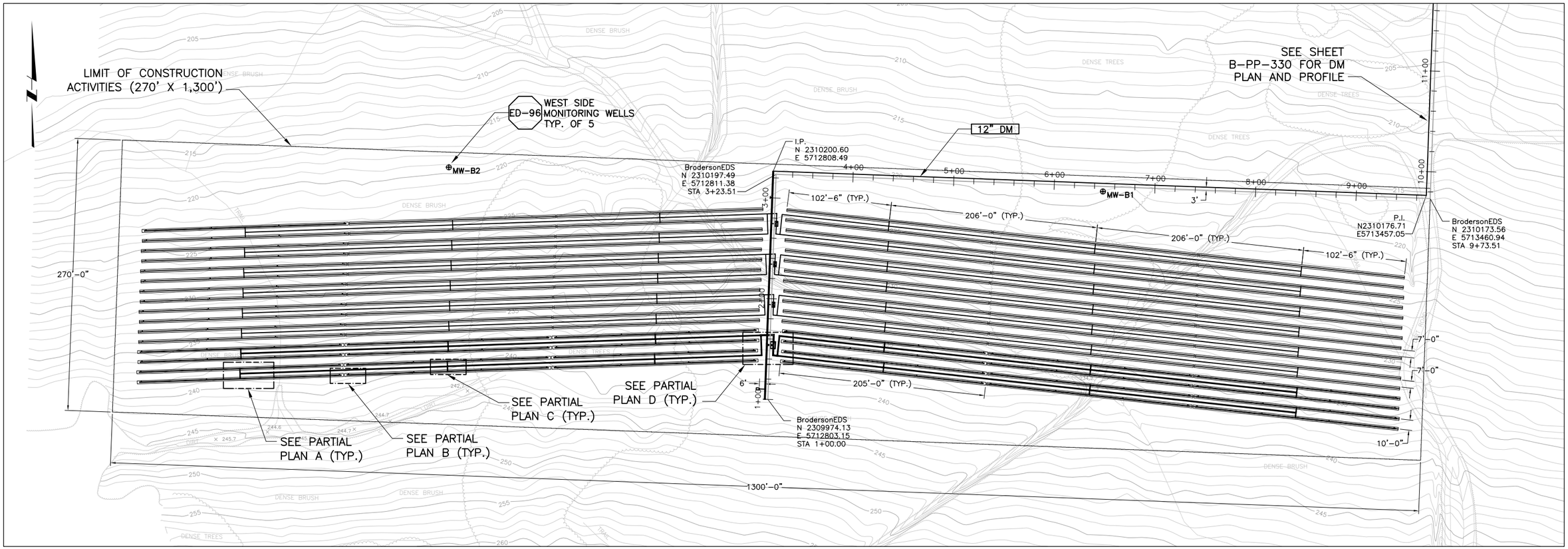

BRODERSON EDS PLAN

SCALE: 1"=50'

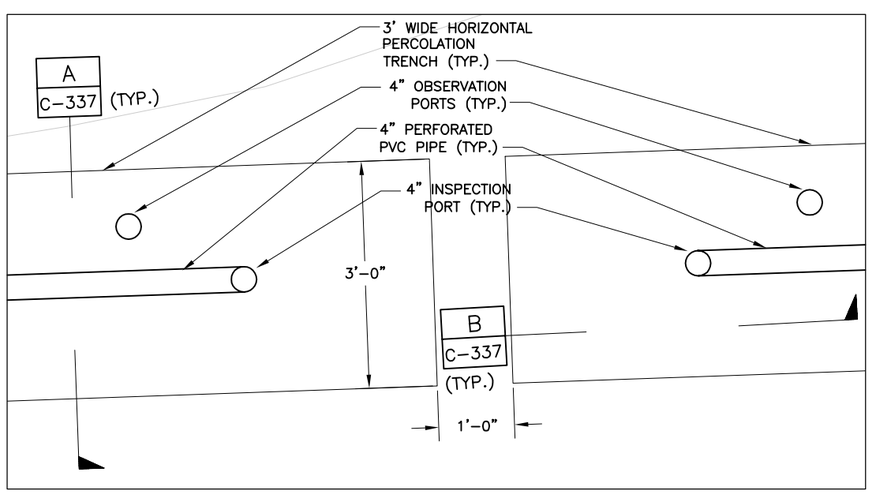

PARTIAL PLAN B

SCALE: 1"=1'

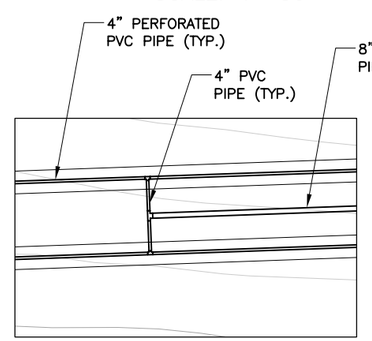

PARTIAL PLAN A

SCALE: 1"=10'

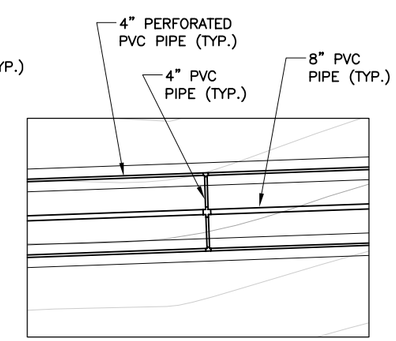

PARTIAL PLAN C

SCALE: 1"=10'

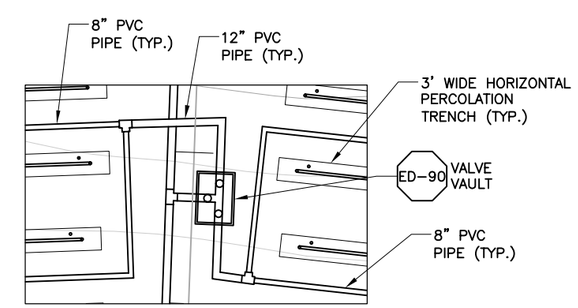

PARTIAL PLAN D

SCALE: 1"=10'

REGISTERED PROFESSIONAL ENGINEER FAN KAI No. C-60022 Exp. 6-30-04 CIVIL STATE OF CALIFORNIA

REV	DATE	BY	DESCRIPTION

SCALE: AS SHOWN

WARNING: 0 1/2 1 — IF THIS BAR DOES NOT MEASURE 1" THEN DRAWING IS NOT TO SCALE

DESIGNED KFK
DRAWN KFK
CHECKED LZT

SUBMITTED BY
JOHN A. BERGEN — C31069 — LICENSE NO. — 2-16-2004 — DATE
STEVEN J. HYLAND — C23892 — LICENSE NO. — 2-16-2004 — DATE

DIGALERT — DIAL TOLL FREE 1-800-642-2444 AT LEAST TWO DAYS BEFORE YOU DIG — UNDERGROUND SERVICE ALERT OF NORTHERN CALIFORNIA

LOS OSOS COMMUNITY SERVICES DISTRICT

MWH Walnut Creek, California

LOS OSOS WASTEWATER PROJECT

EFFLUENT DISPOSAL SYSTEM
BRODERSON EDS PLANS

SHEET ED-C-330

XREF: los_ed_bdr c-ed-dm c-ed-bs x-feat-aerl x-feat-row x-feat-topo c-ed-util cX-UTIL-all aX-UTIL-all c-ed-ss bn-util-ss an-feat-cnbl an-util-ss dn-util-ss cN-UTIL-SS cn-feat-cnbl bn-feat-cnbl x-sup-topo dX-util-all Morro and Corr Easement
FILE: N:\Projects\los_osos\Collect_Sys\ED\civ\ed-c-330.dwg USER: kxkai Feb 09, 2004 3:00pm Job No: 1481166

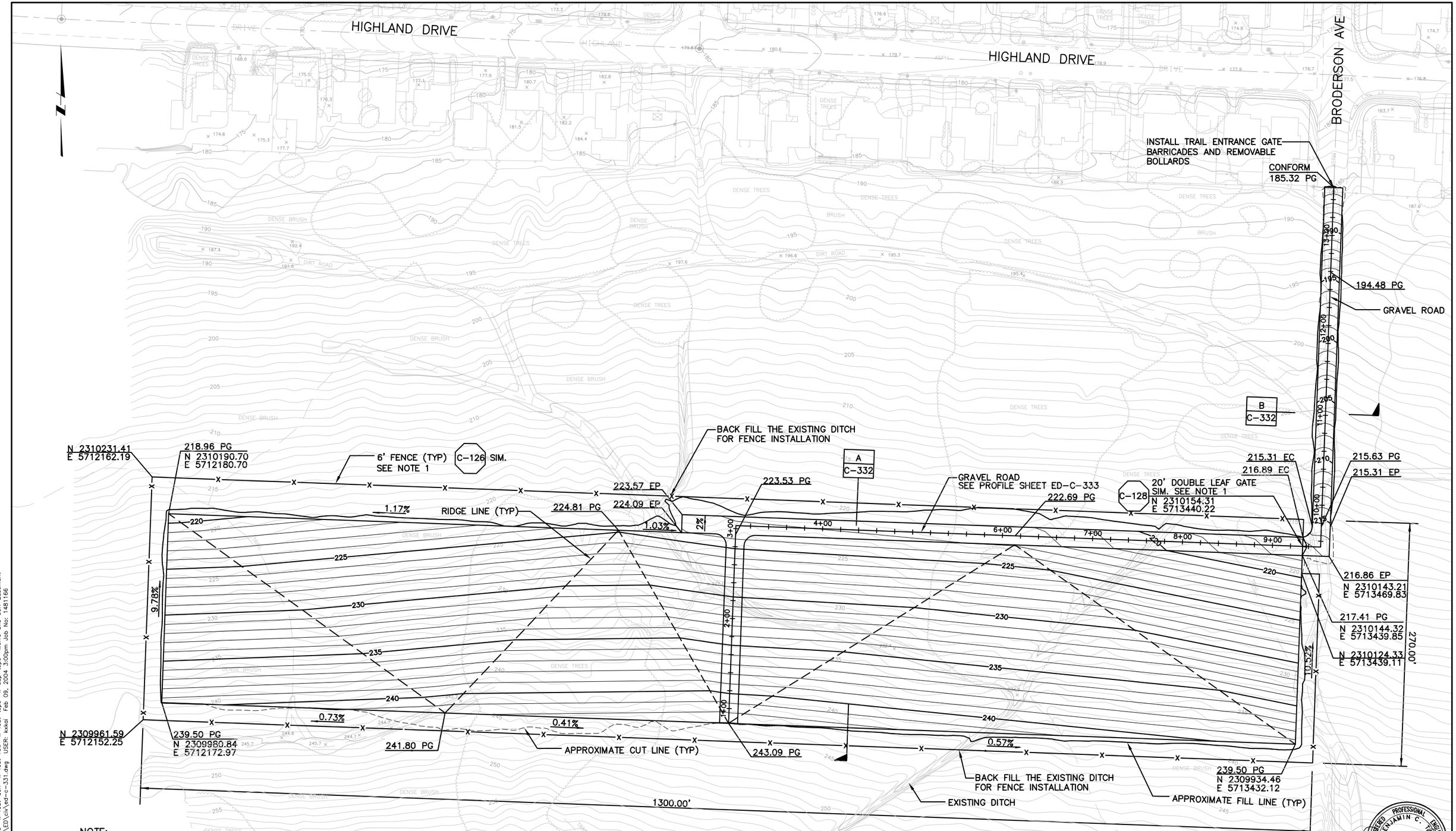

NOTE:

1. FENCING AND GATES SHALL BE NO-CLIMB 2" WIDE X 4" HIGH MESH WITHOUT BARBED WIRE.

PROPOSED GRADING PLAN

SCALE: 1"=50'

REGISTERED PROFESSIONAL ENGINEER BENJAMIN C. TAN No. C62032 Exp. 9/30/05 CIVIL STATE OF CALIFORNIA

REV	DATE	BY	DESCRIPTION

SCALE: AS SHOWN

WARNING: 0 1/2 1 — IF THIS BAR DOES NOT MEASURE 1" THEN DRAWING IS NOT TO SCALE

DESIGNED BT
DRAWN BT
CHECKED MWH

SUBMITTED BY
JOHN A. BERGEN — C31069 — LICENSE NO. — 2-16-2004 DATE
STEVEN J. HYLAND — C23892 — LICENSE NO. — 2-16-2004 DATE

DIGALERT — DIAL TOLL FREE 1-800-642-2444 AT LEAST TWO DAYS BEFORE YOU DIG — UNDERGROUND SERVICE ALERT OF NORTHERN CALIFORNIA

LOS OSOS COMMUNITY SERVICES DISTRICT

MWH Walnut Creek, California

LOS OSOS WASTEWATER PROJECT
EFFLUENT DISPOSAL SYSTEM
BRODERSON EDS
SITE GRADING PLANS

SHEET ED-C-331

XREF: los_ed_bdr c-ed-gd c-ed-bs x-feat-aerl x-feat-row x-feat-topo x-sup-topo Morro and Corr Easement
FILE: N:\Projects\los_osos\Collect_Sys\ED\civ\ed-c-331.dwg USER: kkoi Feb 09, 2004 3:00pm Job No: 1481166

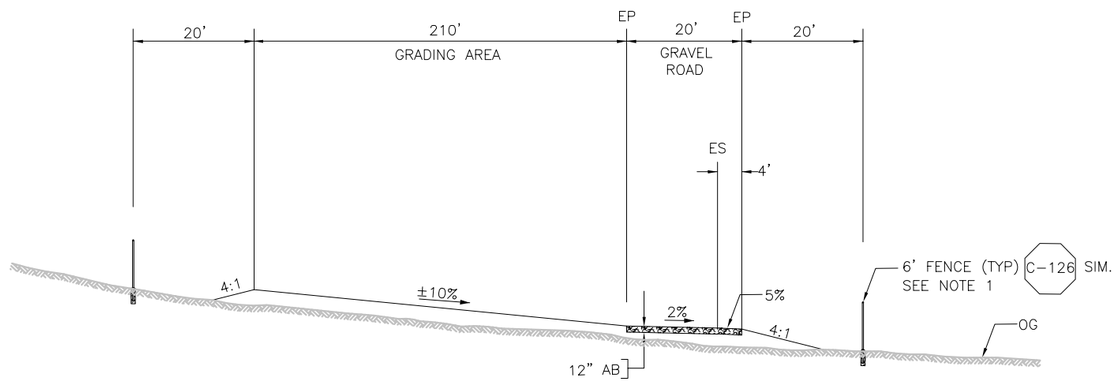

SECTION A–A
N.T.S.

A
C-331

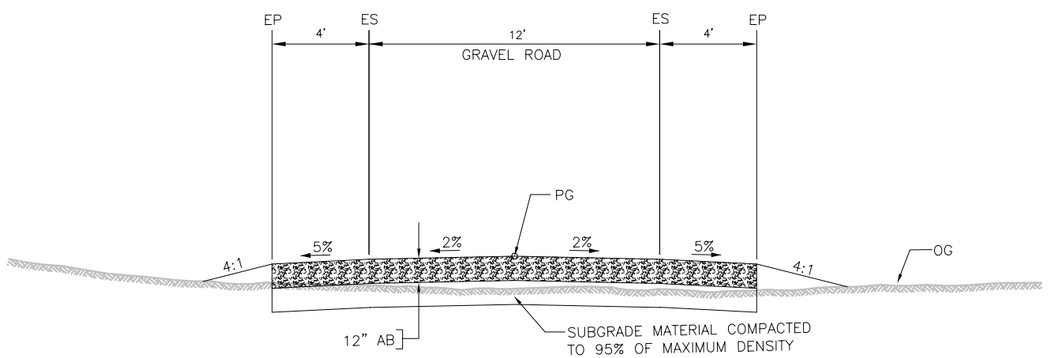

NOTE:

1. FENCING AND GATES SHALL BE NO–CLIMB 2" WIDE X 4" HIGH MESH WITHOUT BARBED WIRE.

SECTION B–B
N.T.S.

B
C-331

REV	DATE	BY	DESCRIPTION

SCALE: AS SHOWN

WARNING: 0 1/2 1 — IF THIS BAR DOES NOT MEASURE 1" THEN DRAWING IS NOT TO SCALE

DESIGNED BCT
DRAWN BCT
CHECKED SJH

SUBMITTED BY
JOHN A. BERGEN — C31069 — LICENSE NO. — 2-16-2004 — DATE
STEVEN J. HYLAND — C23892 — LICENSE NO. — 2-16-2004 — DATE

DIGALERT — DIAL TOLL FREE 1-800-642-2444 AT LEAST TWO DAYS BEFORE YOU DIG — UNDERGROUND SERVICE ALERT OF NORTHERN CALIFORNIA

LOS OSOS COMMUNITY SERVICES DISTRICT

MWH — Walnut Creek, California

LOS OSOS WASTEWATER PROJECT
EFFLUENT DISPOSAL SYSTEM
BRODERSON EDS
SECTIONS

SHEET
ED–C–332

REGISTERED PROFESSIONAL ENGINEER — BENJAMIN C. TAM — No. C62032 — Exp. 9/30/05 — CIVIL — STATE OF CALIFORNIA

XREF: los_ed_bdr c-ed-gd c-ed-bs x-feat-aerl x-feat-row x-feat-topo x-sup-topo Morro and Corr Easement
FILE: N:\Projects\los_osos\Collect_Sys\ED\civ\ed-c-332.dwg USER: kskai Feb 09, 2004 3:01pm Job No: 1481166

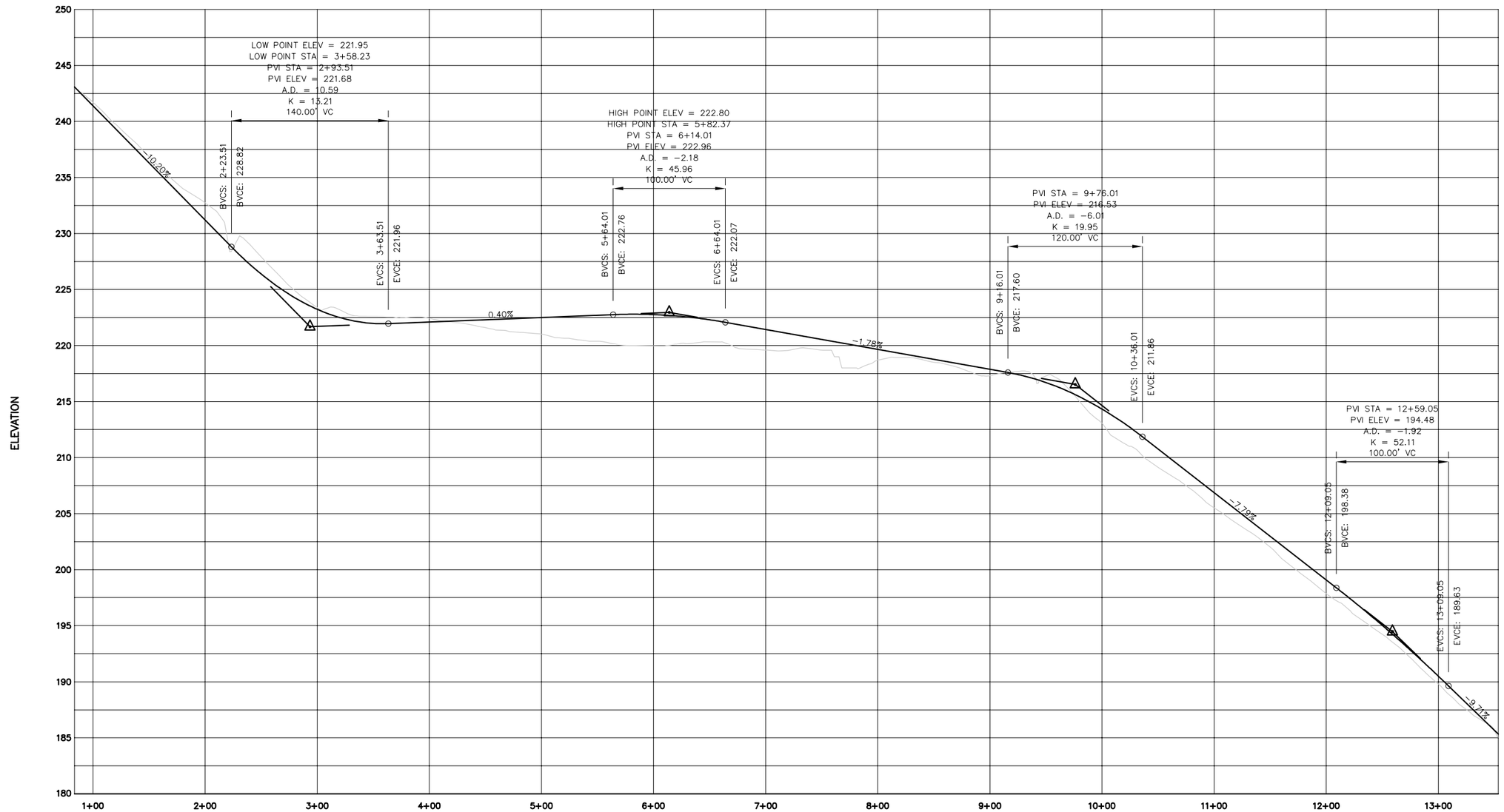

GRAVEL ROAD PROFILE

SCALE: H: 1"=50'
V: 1"=5'

REGISTERED PROFESSIONAL ENGINEER BENJAMIN C. TAI No. C62032 Exp. 9/30/05 CIVIL STATE OF CALIFORNIA

REV	DATE	BY	DESCRIPTION

SCALE: AS SHOWN

WARNING: 0 1/2 1 — IF THIS BAR DOES NOT MEASURE 1" THEN DRAWING IS NOT TO SCALE

DESIGNED BCT
DRAWN BCT
CHECKED SJH

SUBMITTED BY
JOHN A. BERGEN — C31069 — LICENSE NO. — 2-16-2004 — DATE
STEVEN J. HYLAND — C23892 — LICENSE NO. — 2-16-2004 — DATE

DIGALERT — DIAL TOLL FREE 1-800-642-2444 AT LEAST TWO DAYS BEFORE YOU DIG — UNDERGROUND SERVICE ALERT OF NORTHERN CALIFORNIA

LOS OSOS COMMUNITY SERVICES DISTRICT

MWH Walnut Creek, California

LOS OSOS WASTEWATER PROJECT
EFFLUENT DISPOSAL SYSTEM
BRODERSON EDS
GRAVEL ROAD PROFILE

SHEET ED-C-333

XREF: los_ed_bdr c-ed-gd c-ed-bs x-feat-aerl x-feat-row x-feat-topo x-sup-topo Marro and Corr Easement
FILE: N:\Projects\los_osos\Collect_Sys\ED\civ\ed-c-333.dwg USER: kxkai Feb 09, 2004 3:01pm Job No: 1481166

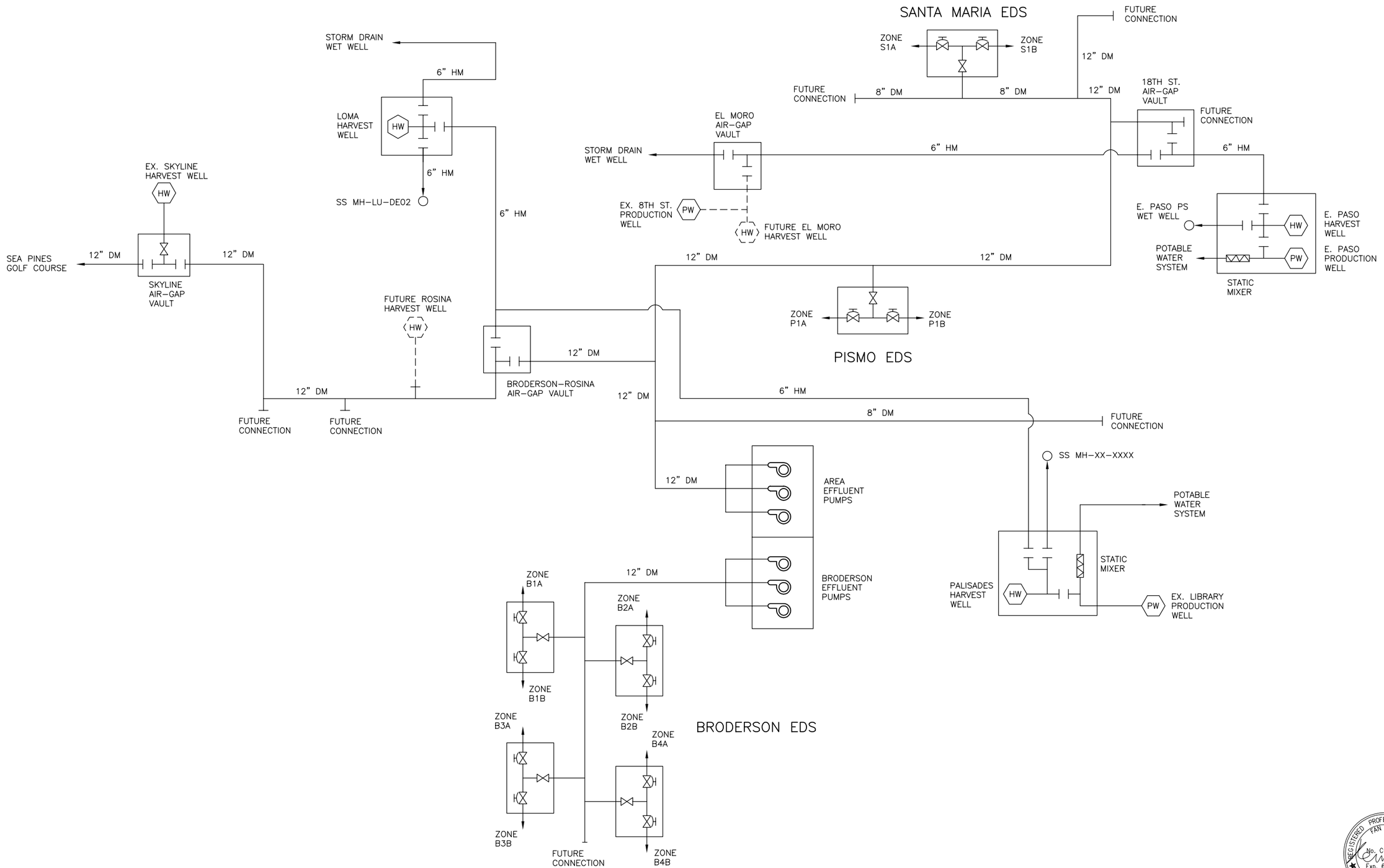

REGISTERED PROFESSIONAL ENGINEER
FAN KAT
No. C-60027
Exp. 6-30-04
CIVIL
STATE OF CALIFORNIA

REV	DATE	BY	DESCRIPTION

SCALE: NTS

WARNING: 0 1/2 1 — IF THIS BAR DOES NOT MEASURE 1" THEN DRAWING IS NOT TO SCALE

DESIGNED KFK
DRAWN KFK
CHECKED SJH

SUBMITTED BY
JOHN A. BERGEN — LICENSE NO. C31069 — DATE 2-16-2004
STEVEN J. HYLAND — LICENSE NO. C23892 — DATE 2-16-2004

DIGALERT — DIAL TOLL FREE 1-800-642-2444 AT LEAST TWO DAYS BEFORE YOU DIG — UNDERGROUND SERVICE ALERT OF NORTHERN CALIFORNIA

LOS OSOS COMMUNITY SERVICES DISTRICT

MWH Walnut Creek, California

LOS OSOS WASTEWATER PROJECT
EFFLUENT DISPOSAL SYSTEM
EDS SCHEMATIC DIAGRAM

SHEET ED-C-334

XREF: los_ed_bdr
FILE: N:\Projects\los_osos\Collect_Sys\ED\civ\ed-c-334.dwg USER: kkoi Feb 09, 2004 3:01pm Job No: 1481166

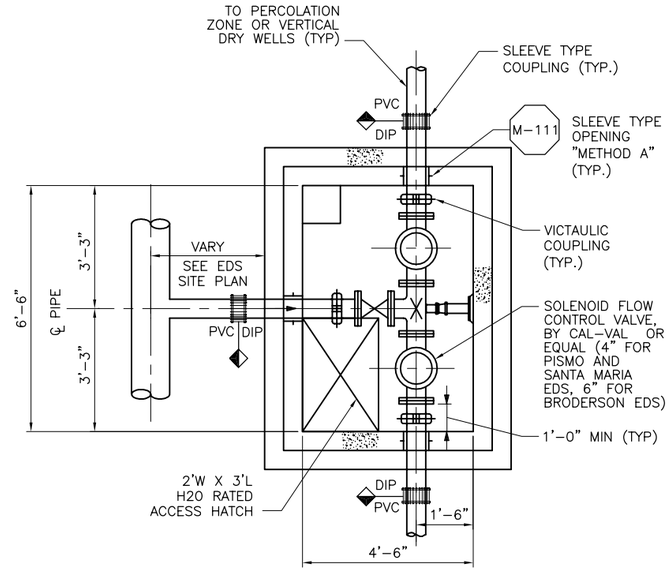

PLAN

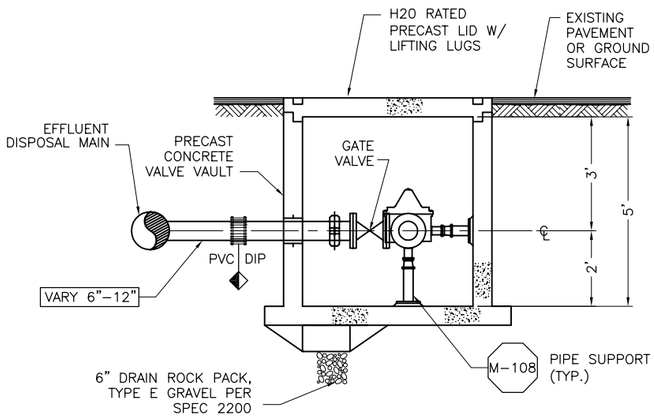

SECTION

EDS VALVE VAULT — ED-90

N.T.S.

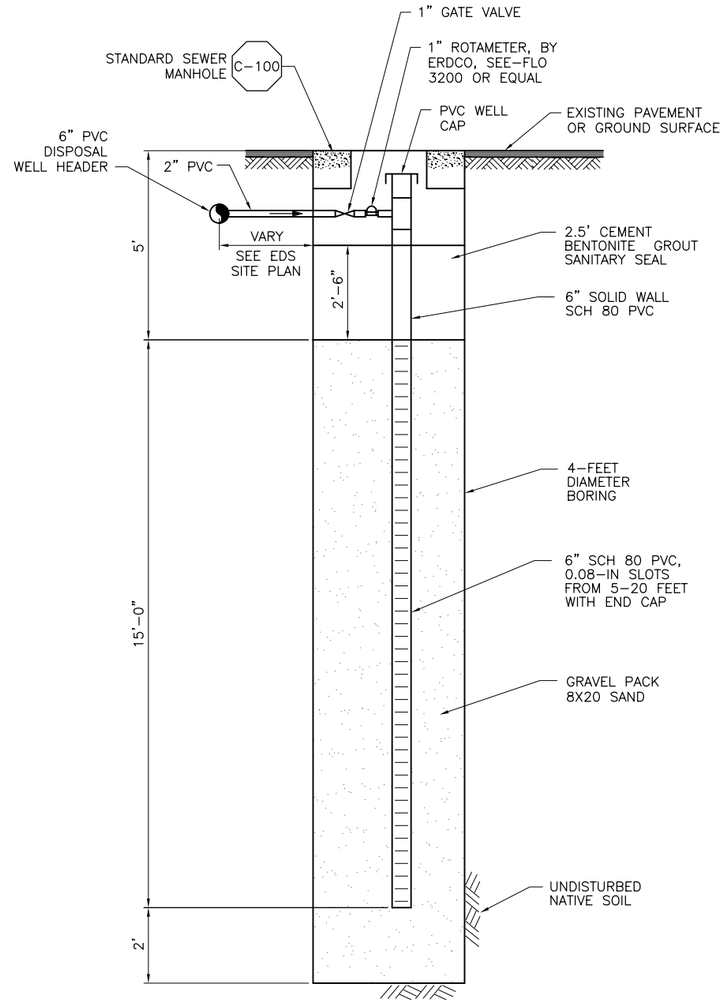

DISPOSAL WELL — ED-91

N.T.S.

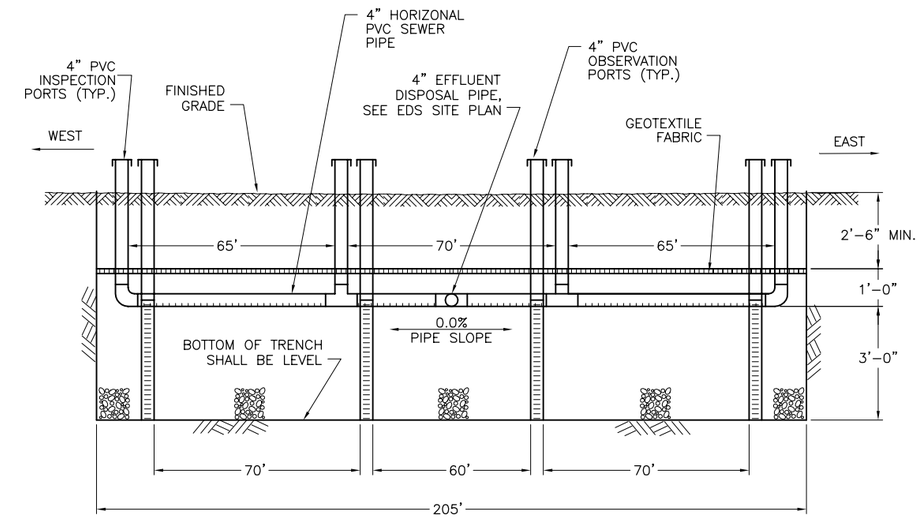

PERCOLATION TRENCH LONGITUDINAL SECTION B

N.T.S. ED-C-330

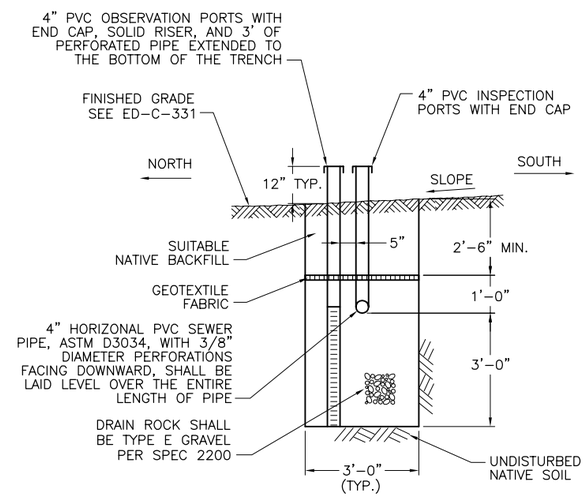

PERCOLATION TRENCH CROSS SECTION A

N.T.S. ED-C-330

REGISTERED PROFESSIONAL ENGINEER FAN KAI No. C-60027 Exp. 6-30-04 CIVIL STATE OF CALIFORNIA

REV	DATE	BY	DESCRIPTION

SCALE: AS SHOWN

WARNING: 0 1/2 1 — IF THIS BAR DOES NOT MEASURE 1" THEN DRAWING IS NOT TO SCALE

DESIGNED KFK
DRAWN KFK
CHECKED LZT

SUBMITTED BY
JOHN A. BERGEN — C31069 — LICENSE NO. — 2-16-2004 — DATE
STEVEN J. HYLAND — C23892 — LICENSE NO. — 2-16-2004 — DATE

DIGALERT — DIAL TOLL FREE 1-800-642-2444 AT LEAST TWO DAYS BEFORE YOU DIG — UNDERGROUND SERVICE ALERT OF NORTHERN CALIFORNIA

LOS OSOS COMMUNITY SERVICES DISTRICT

MWH Walnut Creek, California

LOS OSOS WASTEWATER PROJECT

EFFLUENT DISPOSAL SYSTEM
EDS SECTIONS AND DETAILS 1

SHEET ED-C-337

XREF: los_ed_bdr
FILE: N:\Projects\los_osos\Collect_Sys\ED\civ\ed-c-337.dwg USER: kxkai Feb 09, 2004 3:03pm Job No: 1481166

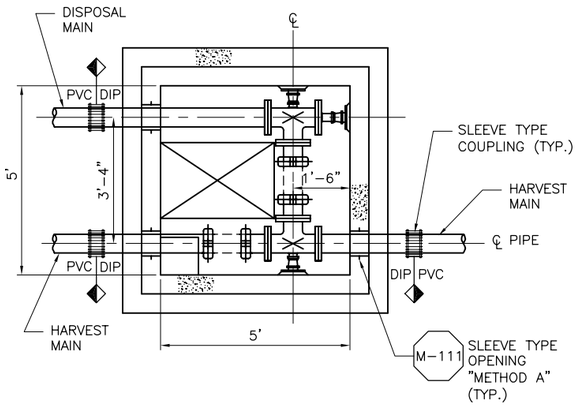

PLAN

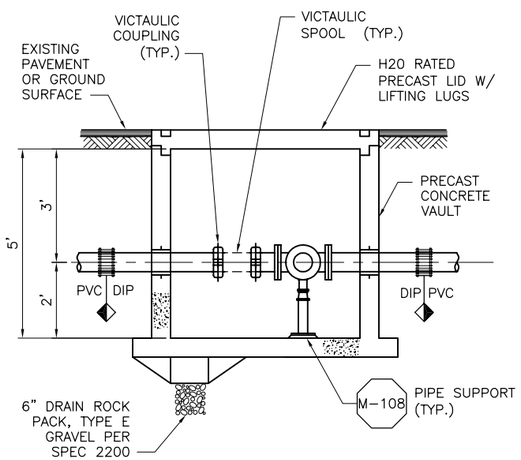

SECTION

18TH ST. AIR-GAP VAULT ED-92
N.T.S.

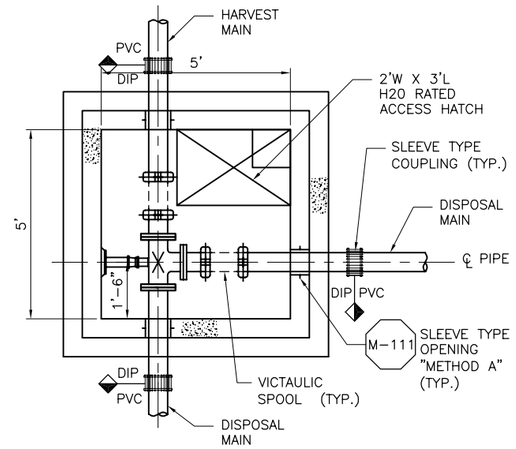

PLAN

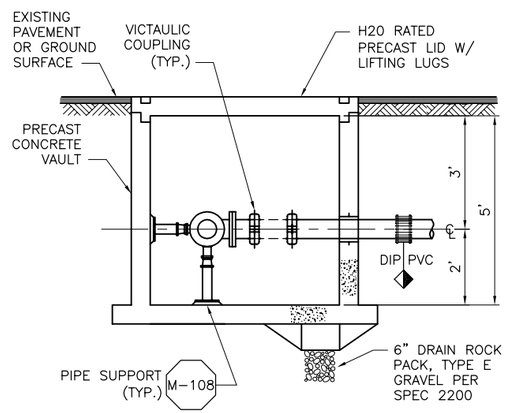

SECTION

BRODERSON-ROSINA AIR-GAP VAULT ED-93
N.T.S.

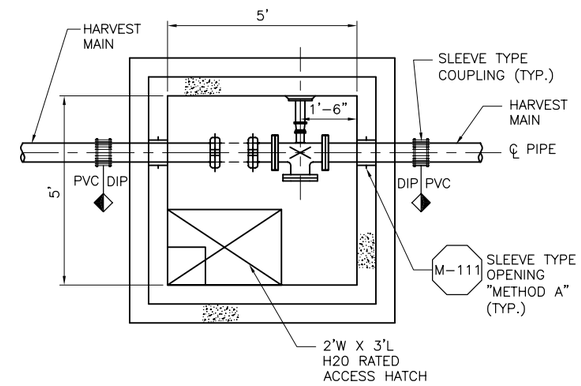

PLAN

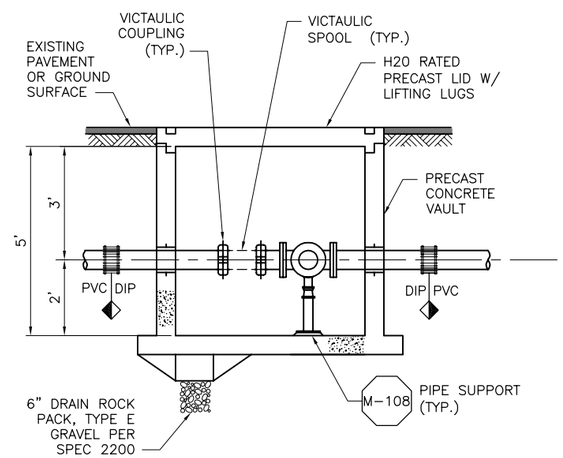

SECTION

EL MORO AIR-GAP VAULT ED-94
N.T.S.

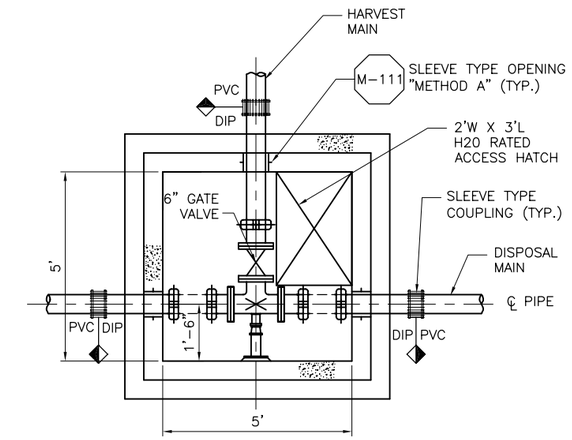

PLAN

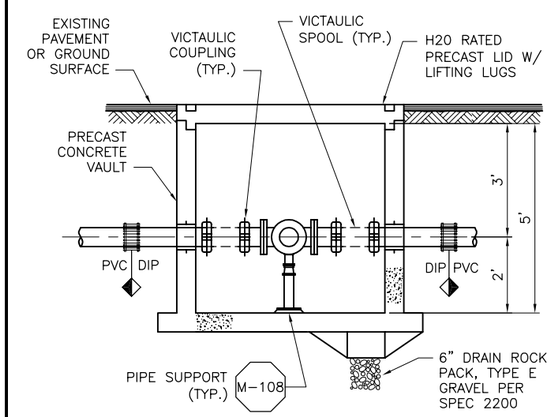

SECTION

SKYLINE AIR-GAP VAULT ED-95
N.T.S.

REGISTERED PROFESSIONAL ENGINEER FAN KAI No. C-60027 Exp. 6-30-04 CIVIL STATE OF CALIFORNIA

REV	DATE	BY	DESCRIPTION

SCALE: 1"=40' HORIZ; 1"=4' VERT

WARNING: 0 1/2 1 — IF THIS BAR DOES NOT MEASURE 1" THEN DRAWING IS NOT TO SCALE

DESIGNED KFK
DRAWN KFK
CHECKED LZT

SUBMITTED BY
JOHN A. BERGEN — C31069 — LICENSE NO. — 2-16-2004 — DATE
STEVEN J. HYLAND — C23892 — LICENSE NO. — 2-16-2004 — DATE

DIGALERT — DIAL TOLL FREE 1-800-642-2444 AT LEAST TWO DAYS BEFORE YOU DIG — UNDERGROUND SERVICE ALERT OF NORTHERN CALIFORNIA

LOS OSOS COMMUNITY SERVICES DISTRICT

MWH Walnut Creek, California

LOS OSOS WASTEWATER PROJECT
EFFLUENT DISPOSAL SYSTEM
EDS SECTIONS AND DETAILS 2

SHEET ED-C-338

XREF: los_ed_bdr
FILE: N:\Projects\los_osos\Collect_Sys\ED\civ\ed-c-338.dwg USER: kxkai Feb 09, 2004 3:03pm Job No: 1481166

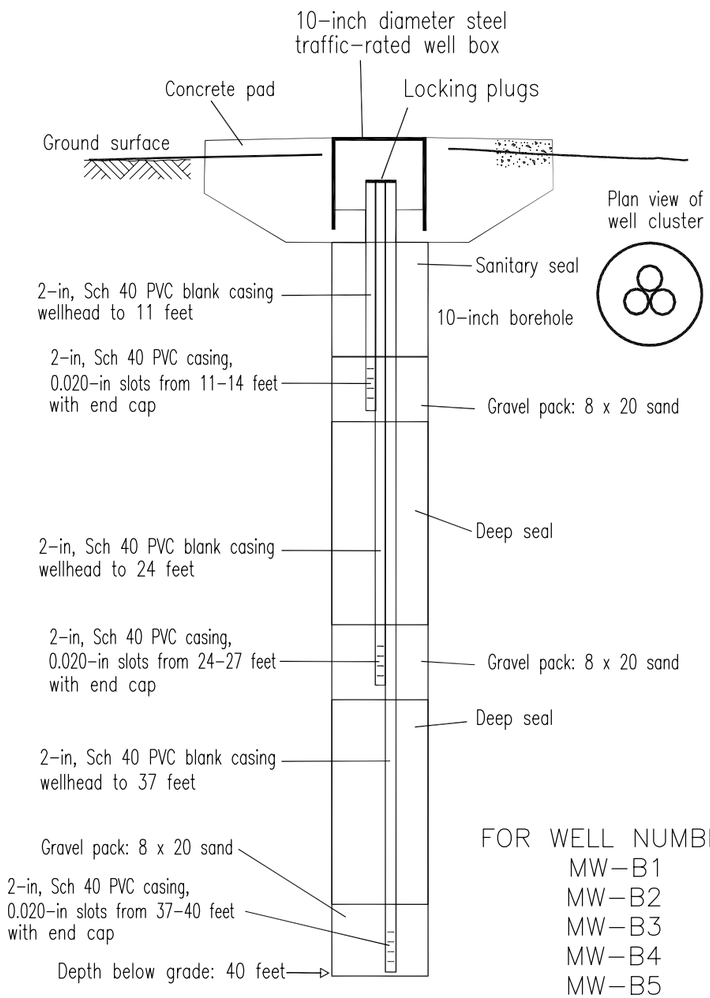

FOR WELL NUMBER:
MW-B1
MW-B2
MW-B3
MW-B4
MW-B5

Cleath & Associates

NOTE: FOR LOCATION OF THESE WELLS SEE SHEET AD-G-007 OR BC-G-007

WEST SIDE MONITORING WELLS
N.T.S.
ED-96

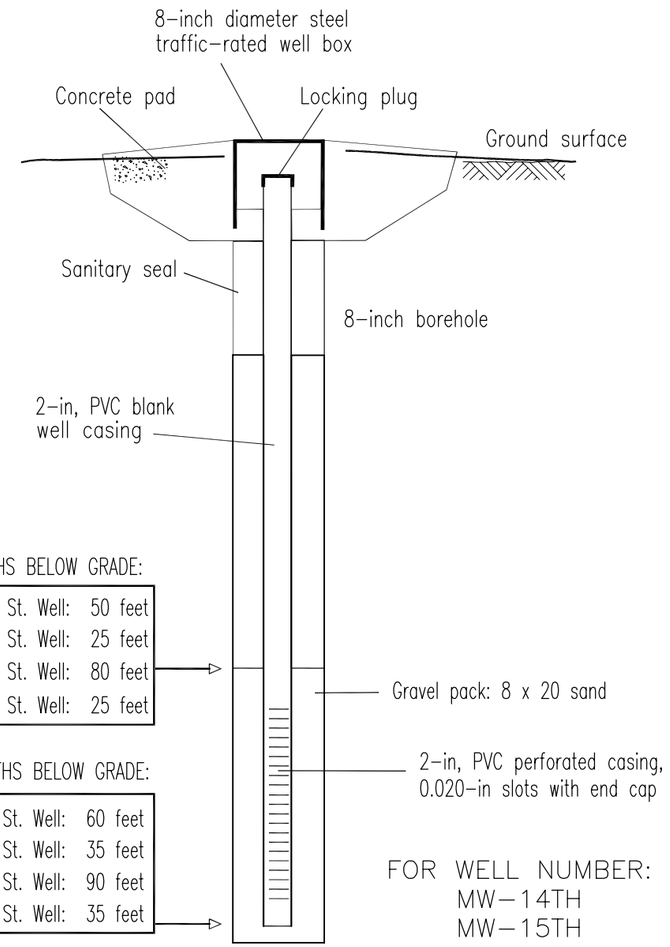

DEPTHS BELOW GRADE:

14th St. Well:	50 feet
15th St. Well:	25 feet
16th St. Well:	80 feet
17th St. Well:	25 feet

DEPTHS BELOW GRADE:

14th St. Well:	60 feet
15th St. Well:	35 feet
16th St. Well:	90 feet
17th St. Well:	35 feet

FOR WELL NUMBER:
MW-14TH
MW-15TH
MW-16TH
MW-17TH
MW-18TH

Cleath & Associates

NOTE: FOR LOCATION OF THESE WELLS SEE SHEET AD-G-007 OR BC-G-007

EAST SIDE MONITORING WELLS
N.T.S.
ED-97

REGISTERED PROFESSIONAL ENGINEER
FAN KAT
No. C-60027
Exp. 6-30-04
CIVIL
STATE OF CALIFORNIA

REV	DATE	BY	DESCRIPTION

SCALE: AS SHOWN

WARNING: 0 1/2 1 — IF THIS BAR DOES NOT MEASURE 1" THEN DRAWING IS NOT TO SCALE

DESIGNED KFK
DRAWN KFK
CHECKED LZT

SUBMITTED BY
JOHN A. BERGEN — C31069 — LICENSE NO. — 2-16-2004 — DATE
STEVEN J. HYLAND — C23892 — LICENSE NO. — 2-16-2004 — DATE

DIGALERT — DIAL TOLL FREE 1-800-642-2444 AT LEAST TWO DAYS BEFORE YOU DIG — UNDERGROUND SERVICE ALERT OF NORTHERN CALIFORNIA

LOS OSOS COMMUNITY SERVICES DISTRICT

MWH Walnut Creek, California

LOS OSOS WASTEWATER PROJECT
EFFLUENT DISPOSAL SYSTEM
EDS SECTIONS AND DETAILS 3

SHEET
ED-C-339

XREF: los_ed_bdr
FILE: N:\Projects\los_osos\Collect_Sys\ED\civ\ed-c-339.dwg USER: kakai Feb 09, 2004 2:51pm Job No: 1481166

SEE SHEET B-PP-331 FOR CONTINUATION

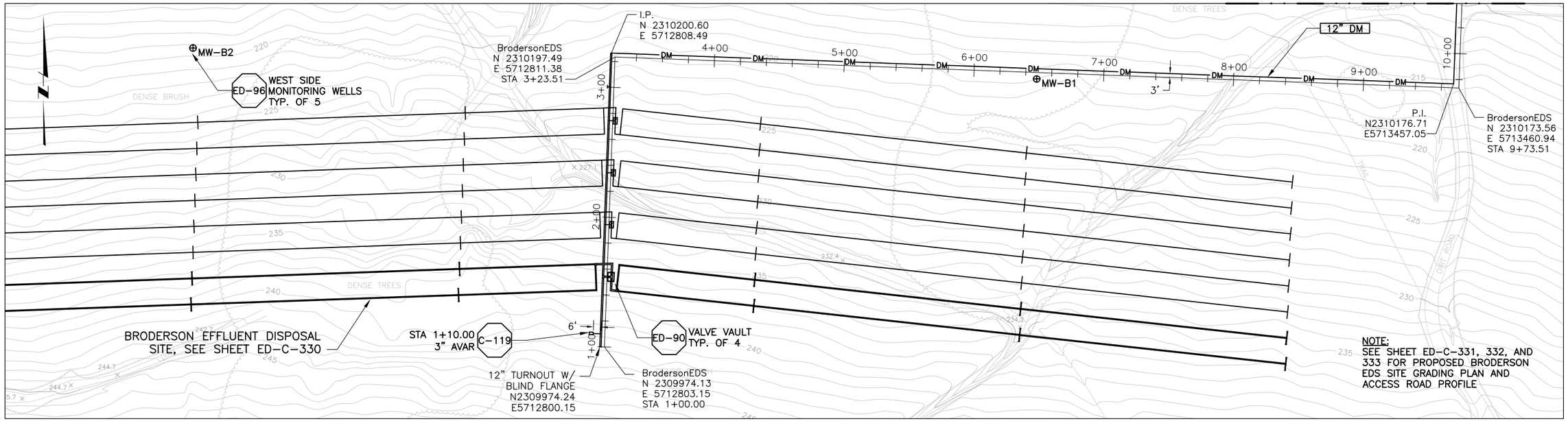

PLAN ON BRODERSON EDS SITE

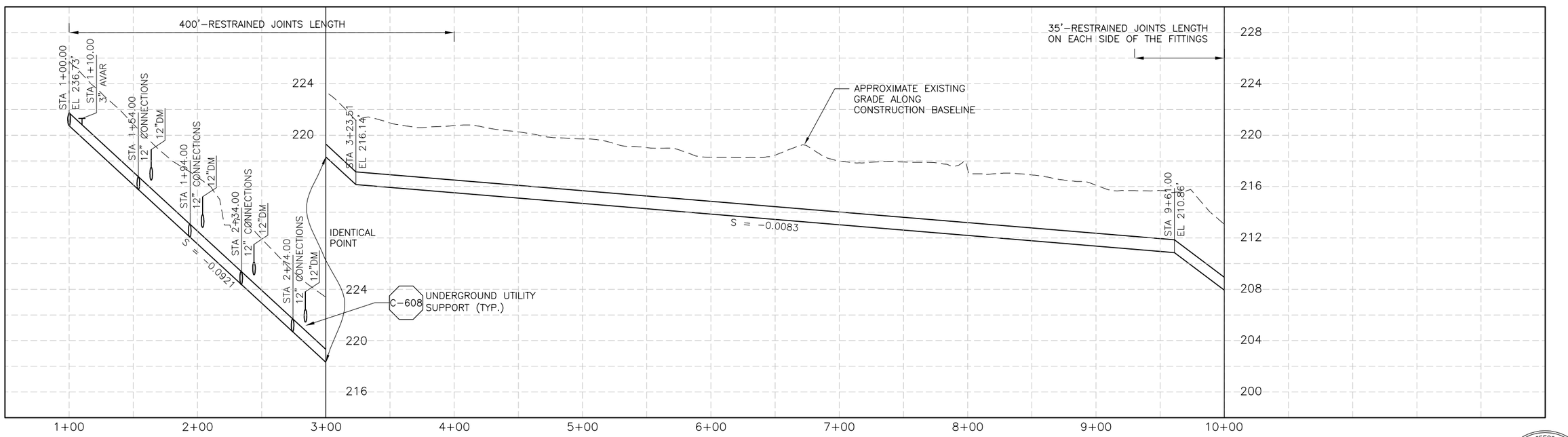

PROFILE ON BRODERSON EDS SITE

REGISTERED PROFESSIONAL ENGINEER FAN KAI No. C-60024 Exp. 6-30-04 CIVIL STATE OF CALIFORNIA

REV	DATE	BY	DESCRIPTION

SCALE: 1"=40' HORIZ; 1"=4' VERT

WARNING: 0 1/2 1 — IF THIS BAR DOES NOT MEASURE 1" THEN DRAWING IS NOT TO SCALE

DESIGNED KFK
DRAWN KFK
CHECKED LZT

SUBMITTED BY
JOHN A. BERGEN — C31069 — LICENSE NO. — 2-16-2004 — DATE
STEVEN J. HYLAND — C23892 — LICENSE NO. — 2-16-2004 — DATE

DIGALERT — DIAL TOLL FREE 1-800-642-2444 AT LEAST TWO DAYS BEFORE YOU DIG — UNDERGROUND SERVICE ALERT OF NORTHERN CALIFORNIA

LOS OSOS COMMUNITY SERVICES DISTRICT

MWH Walnut Creek, California

LOS OSOS WASTEWATER PROJECT
PLAN AND PROFILE – EDS BORDERSON EDS SITE
STA 1+00 TO STA 10+00

SHEET B-PP-330

XREF: los_ed_bdr c-ed-dm c-ed-bs x-feat-cerl x-feat-row x-feat-topo c-ed-util c-ed-pp cX-UTIL-all aX-UTIL-all c-ed-ss bn-util-ss an-feat-cnbl an-util-ss dn-util-ss cN-UTIL-SS cn-feat-cnbl bn-feat-cnbl x-sup-topo dX-util-all Morro and Corr Easement
FILE: N:\Projects\los_osos\Collect_Sys\ED\cir\b-pp-330.dwg USER: kxkai Feb 09, 2004 3:03pm Job No: 1481166

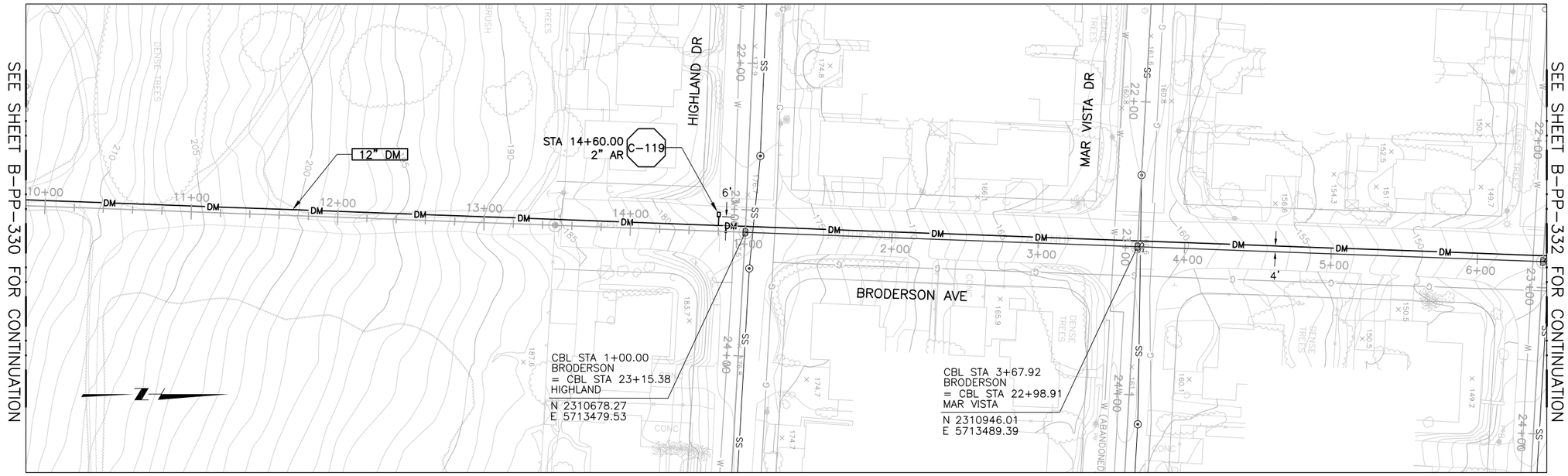

PLAN ON BRODERSON AVE

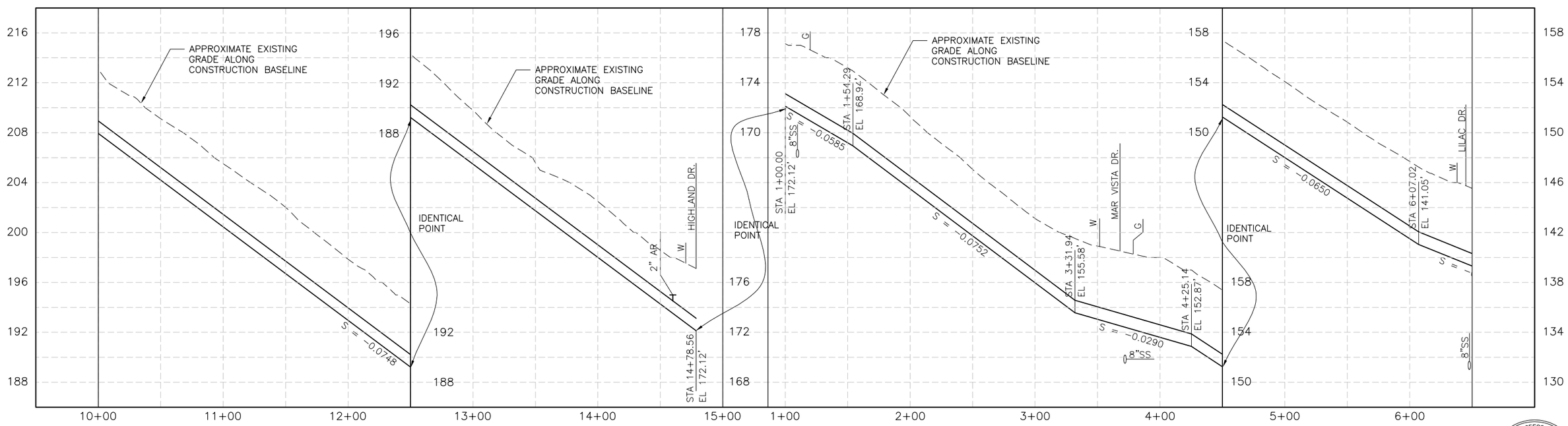

PROFILE ON BRODERSON AVE

REGISTERED PROFESSIONAL ENGINEER FAN KAI No. C-60024 Exp. 6-30-04 CIVIL STATE OF CALIFORNIA

REV	DATE	BY	DESCRIPTION

SCALE: 1"=40' HORIZ; 1"=4' VERT

WARNING: 0 1/2 1 — IF THIS BAR DOES NOT MEASURE 1" THEN DRAWING IS NOT TO SCALE

DESIGNED KFK
DRAWN KFK
CHECKED LZT

SUBMITTED BY
JOHN A. BERGEN — C31069 — LICENSE NO. — 2-16-2004 — DATE
STEVEN J. HYLAND — C23892 — LICENSE NO. — 2-16-2004 — DATE

DIGALERT — DIAL TOLL FREE 1-800-642-2444 AT LEAST TWO DAYS BEFORE YOU DIG — UNDERGROUND SERVICE ALERT OF NORTHERN CALIFORNIA

LOS OSOS COMMUNITY SERVICES DISTRICT

MWH Walnut Creek, California

LOS OSOS WASTEWATER PROJECT

PLAN AND PROFILE – EDS
BRODERSON AVENUE
STA 10+00 TO STA 6+50

SHEET B-PP-331

XREF: los_ed_bdr c-ed-dm c-ed-bs x-feat-cerl x-feat-row x-feat-topo c-ed-util c-ed-pp cX-UTIL-all aX-UTIL-all c-ed-ss bn-util-ss an-feat-cnbl an-util-ss dn-util-ss cN-UTIL-SS cn-feat-cnbl bn-feat-cnbl dX-util-all x-sup-topo Morro and Corr Easement
FILE: N:\Projects\los_osos\Collect_Sys\ED\cir\b-pp-331.dwg USER: kxkai Feb 09, 2004 2:51pm Job No: 1481166

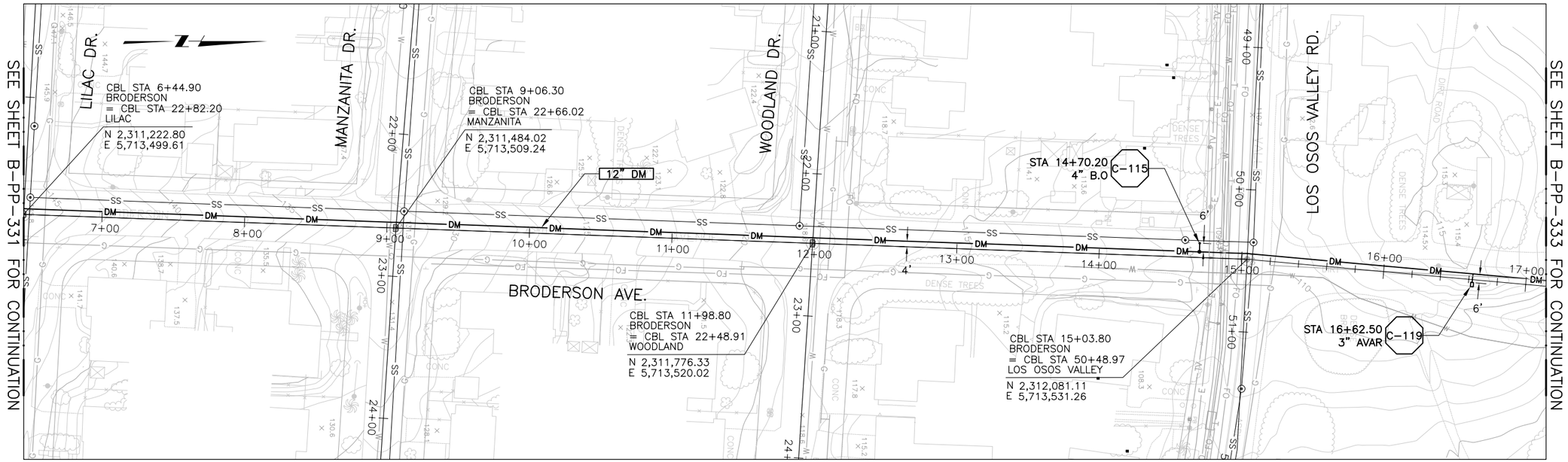

PLAN ON BRODERSON AVE

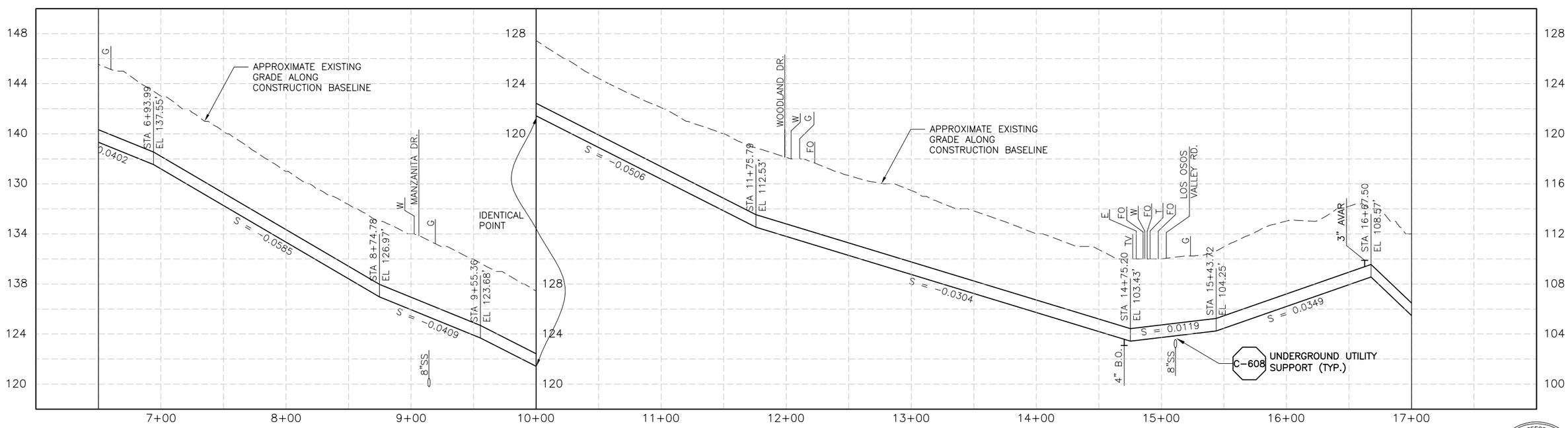

PROFILE ON BRODERSON AVE

REGISTERED PROFESSIONAL ENGINEER
FAN KAI
No. C-60024
Exp. 6-30-04
CIVIL
STATE OF CALIFORNIA

REV	DATE	BY	DESCRIPTION

SCALE
1"=40' HORIZ
1"=4' VERT

WARNING
0 1/2 1
IF THIS BAR DOES NOT MEASURE 1" THEN DRAWING IS NOT TO SCALE

DESIGNED KFK
DRAWN KFK
CHECKED LZT

SUBMITTED BY
JOHN A. BERGEN — C31069 — LICENSE NO. — 2-16-2004 — DATE
STEVEN J. HYLAND — C23892 — LICENSE NO. — 2-16-2004 — DATE

DIGALERT
DIAL TOLL FREE
1-800-642-2444
AT LEAST TWO DAYS BEFORE YOU DIG
UNDERGROUND SERVICE ALERT OF NORTHERN CALIFORNIA

LOS OSOS
COMMUNITY SERVICES DISTRICT

MWH
Walnut Creek, California

LOS OSOS WASTEWATER PROJECT
PLAN AND PROFILE – EDS
BRODERSON AVENUE
STA 6+50 TO STA 17+00

SHEET
B-PP-332

XREF: los_ed_bdr c-ed-dm c-ed-bs x-feat-cerl x-feat-row x-feat-topo c-ed-util c-ed-pp cX-UTIL-all aX-UTIL-all c-ed-ss bn-util-ss an-feat-cnbl an-util-ss dn-util-ss cN-UTIL-SS cn-feat-cnbl bn-feat-cnbl x-sup-topo dX-util-all Morro and Corr Easement
FILE: N:\Projects\los_osos\Collect_Sys\ED\cir\b-pp-332.dwg USER: kxkai Feb 09, 2004 2:52pm Job No: 1481166

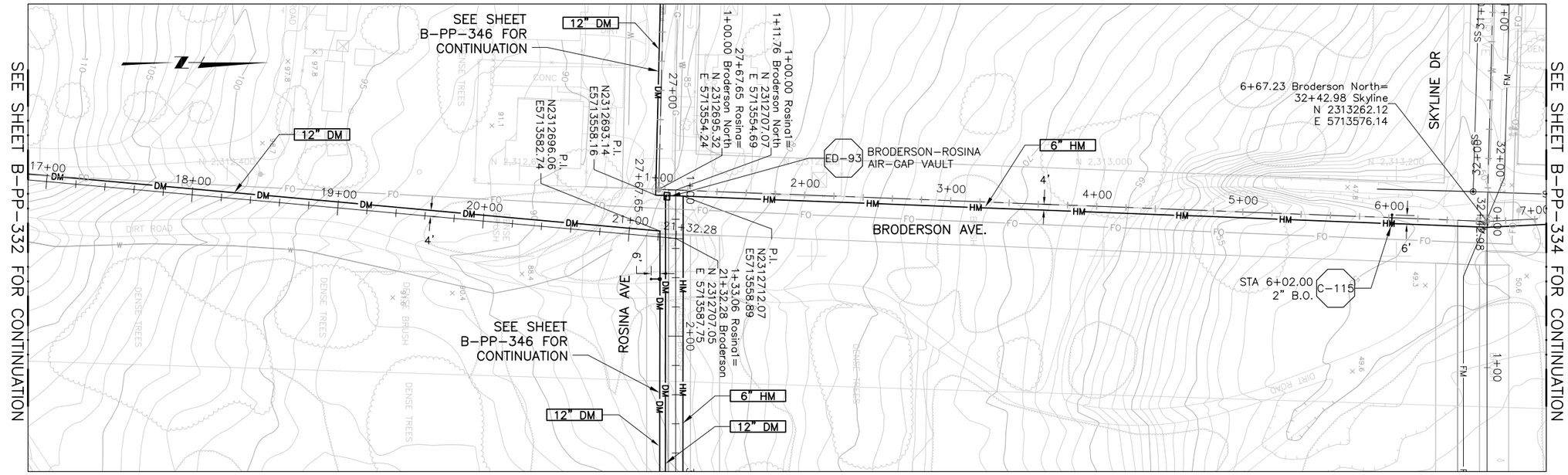

PLAN ON BRODERSON AVE

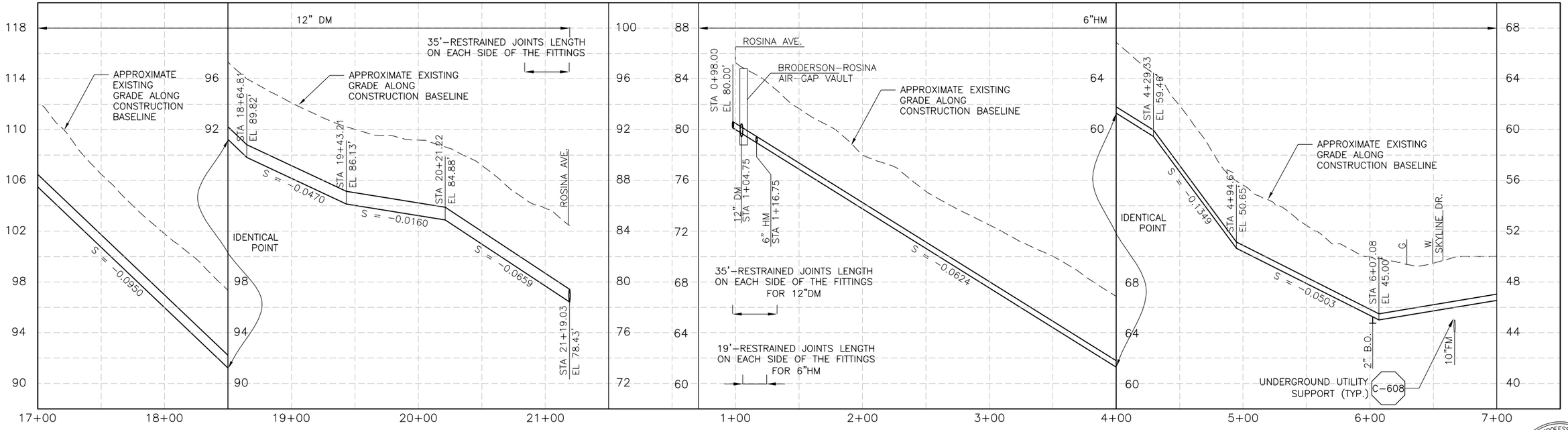

PROFILE ON BRODERSON AVE

REGISTERED PROFESSIONAL ENGINEER FAN KAI No. C-60024 Exp. 6-30-04 CIVIL STATE OF CALIFORNIA

REV	DATE	BY	DESCRIPTION

SCALE: 1"=40' HORIZ; 1"=4' VERT

WARNING: 0 1/2 1 — IF THIS BAR DOES NOT MEASURE 1" THEN DRAWING IS NOT TO SCALE

DESIGNED KFK
DRAWN KFK
CHECKED LZT

SUBMITTED BY
JOHN A. BERGEN — C31069 — LICENSE NO. — 2-16-2004 — DATE
STEVEN J. HYLAND — C23892 — LICENSE NO. — 2-16-2004 — DATE

DIGALERT — DIAL TOLL FREE 1-800-642-2444 AT LEAST TWO DAYS BEFORE YOU DIG — UNDERGROUND SERVICE ALERT OF NORTHERN CALIFORNIA

LOS OSOS COMMUNITY SERVICES DISTRICT

MWH Walnut Creek, California

LOS OSOS WASTEWATER PROJECT
PLAN AND PROFILE – EDS
BRODERSON AVENUE
STA 16+00 TO STA 7+00

SHEET B-PP-333

XREF: los_ed_bdr c-ed-dtn c-ed-bs x-feat-aerl x-feat-row x-feat-topo c-ed-util c-ed-pp cX-UTIL-all aX-UTIL-all c-ed-ss bn-util-ss an-feat-cnbl on-util-ss dn-util-ss cN-UTIL-SS cn-feat-cnbl bn-feat-cnbl x-sup-topo dX-util-all Morro and Corr Easement
FILE: N:\Projects\los_osos\Collect_Sys\ED\cin\b-pp-333.dwg USER: kxkai Feb 09, 2004 4:16pm Job No: 1481166

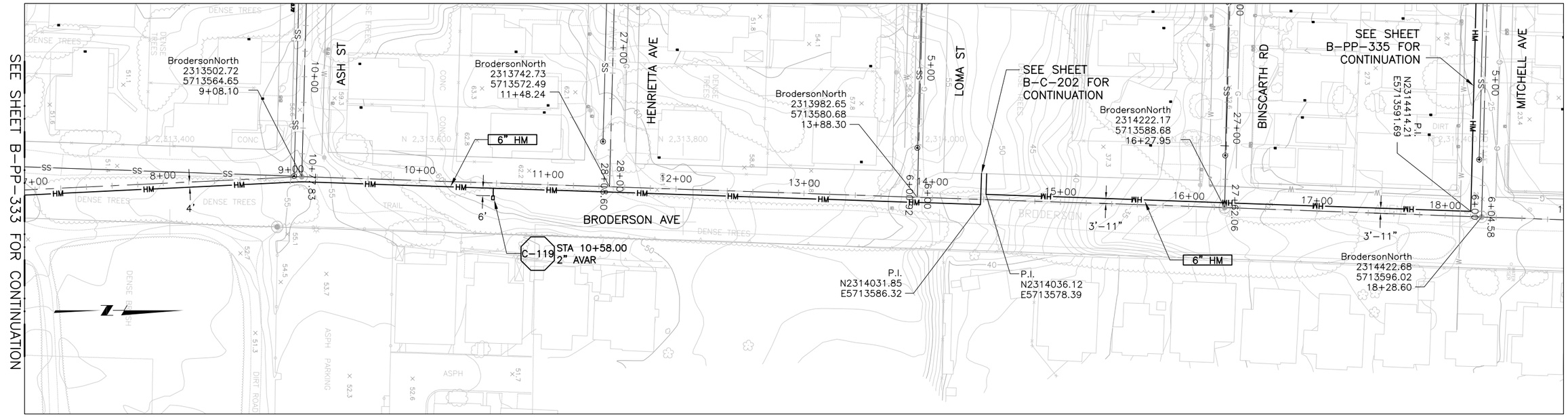

PLAN ON BRODERSON AVE

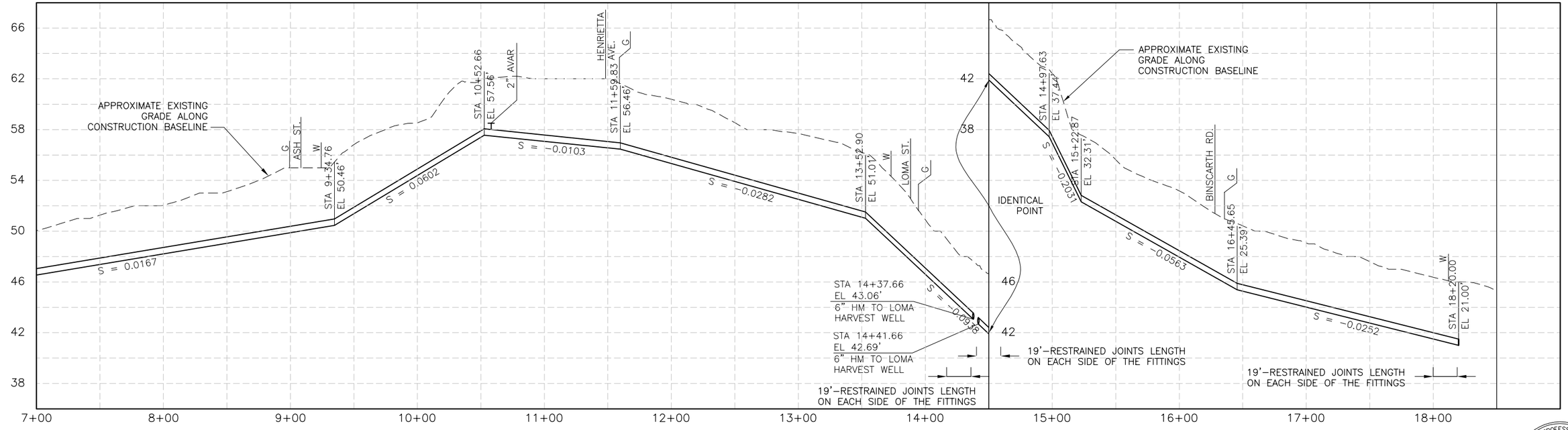

PROFILE ON BRODERSON AVE

REGISTERED PROFESSIONAL ENGINEER
FAN KAI
No. C-60024
Exp. 6-30-04
CIVIL
STATE OF CALIFORNIA

REV	DATE	BY	DESCRIPTION

SCALE
1"=40' HORIZ
1"=4' VERT

WARNING
0 1/2 1
IF THIS BAR DOES NOT MEASURE 1" THEN DRAWING IS NOT TO SCALE

DESIGNED KFK
DRAWN KFK
CHECKED LZT

SUBMITTED BY
JOHN A. BERGEN — C31069 — LICENSE NO. — 2-16-2004 — DATE
STEVEN J. HYLAND — C23892 — LICENSE NO. — 2-16-2004 — DATE

DIGALERT
DIAL TOLL FREE
1-800-642-2444
AT LEAST TWO DAYS BEFORE YOU DIG
UNDERGROUND SERVICE ALERT OF NORTHERN CALIFORNIA

LOS OSOS
COMMUNITY SERVICES DISTRICT

MWH
Walnut Creek, California

LOS OSOS WASTEWATER PROJECT
PLAN AND PROFILE – EDS
BRODERSON AVENUE
STA 7+00 TO STA 19+00

SHEET
B-PP-334

XREF: los_ed_bdr c-ed-dm c-ed-bs x-feat-cerl x-feat-row x-feat-topo c-ed-util c-ed-pp cX-UTIL-all aX-UTIL-all c-ed-ss bn-util-ss an-feat-cnbl an-util-ss dn-util-ss cN-UTIL-SS cn-feat-cnbl bn-feat-cnbl x-sup-topo dX-util-all Morro and Corr Easement
FILE: N:\Projects\los_osos\Collect_Sys\ED\Civil\b-pp-334.dwg USER: kxkai Feb 09, 2004 2:53pm Job No: 1481166

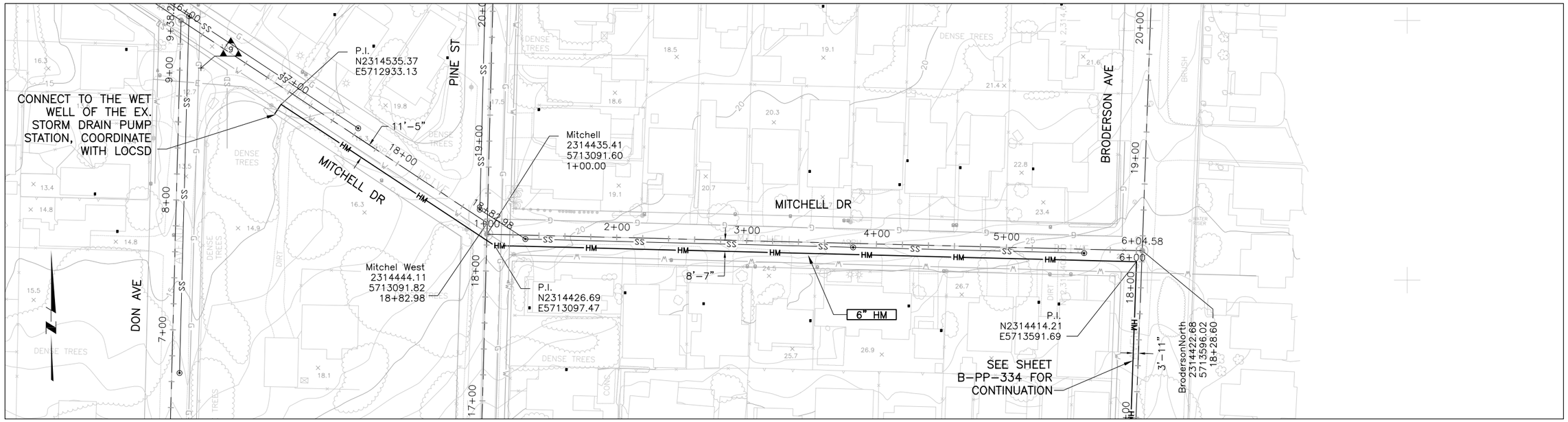

PLAN ON MITCHELL DR

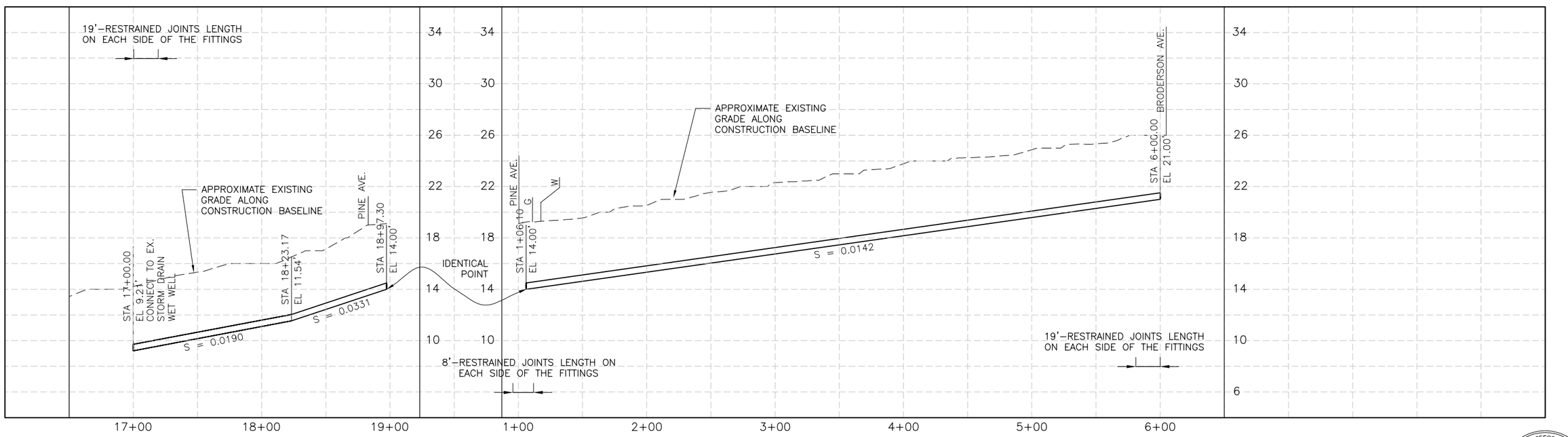

PROFILE ON MITCHELL DR

REGISTERED PROFESSIONAL ENGINEER
FAN KAI
No. C-60024
Exp. 6-30-04
CIVIL
STATE OF CALIFORNIA

REV	DATE	BY	DESCRIPTION

SCALE
1"=40' HORIZ
1"=4' VERT

WARNING
0 1/2 1
IF THIS BAR DOES NOT MEASURE 1" THEN DRAWING IS NOT TO SCALE

DESIGNED KFK
DRAWN KFK
CHECKED LZT

SUBMITTED BY
JOHN A. BERGEN — C31069 — LICENSE NO. — 2-16-2004 — DATE
STEVEN J. HYLAND — C23892 — LICENSE NO. — 2-16-2004 — DATE

DIGALERT
DIAL TOLL FREE 1-800-642-2444 AT LEAST TWO DAYS BEFORE YOU DIG
UNDERGROUND SERVICE ALERT OF NORTHERN CALIFORNIA

LOS OSOS
COMMUNITY SERVICES DISTRICT

MWH
Walnut Creek, California

LOS OSOS WASTEWATER PROJECT
PLAN AND PROFILE – EDS
MITCHELL DRIVE
STA 17+00 TO STA 6+00

SHEET
B-PP-335

XREF: los_ed_bdr c-ed-drn c-ed-bs x-feat-cerl x-feat-row x-feat-topo c-ed-util c-ed-pp cX-UTIL-all aX-UTIL-all c-ed-ss bn-util-ss an-feat-cnbl an-util-ss dn-util-ss cN-UTIL-SS cn-feat-cnbl bn-feat-cnbl x-sup-topo dX-util-all Morro and Corr Easement
FILE: N:\Projects\los_osos\Collect_Sys\ED\Civil\b-pp-335.dwg USER: kxkai Feb 09, 2004 2:53pm Job No: 1481166

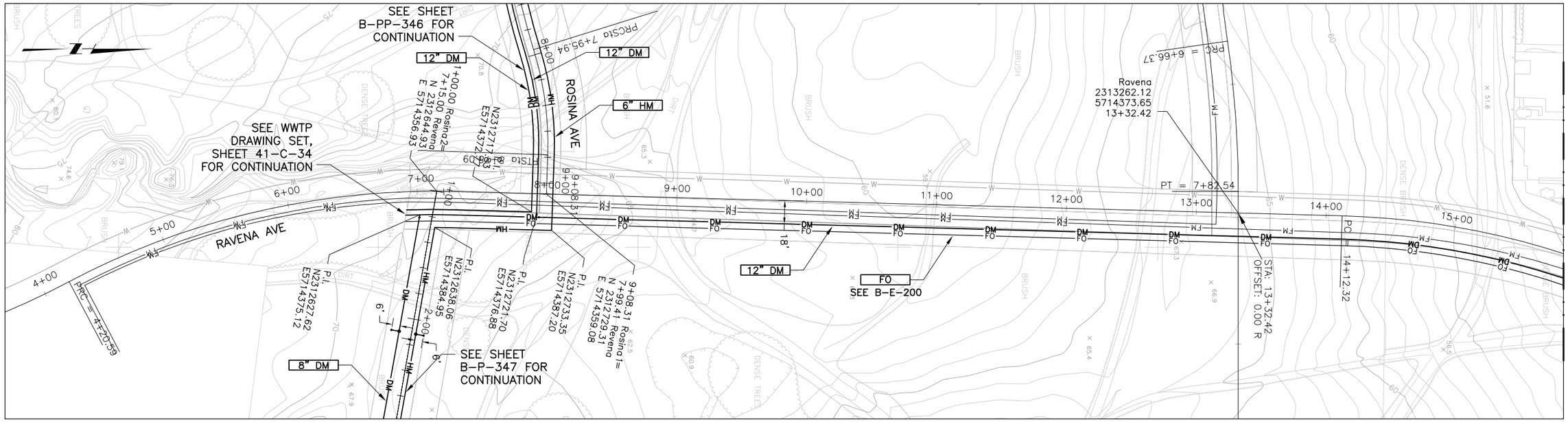

PLAN ON RAVENA AVE

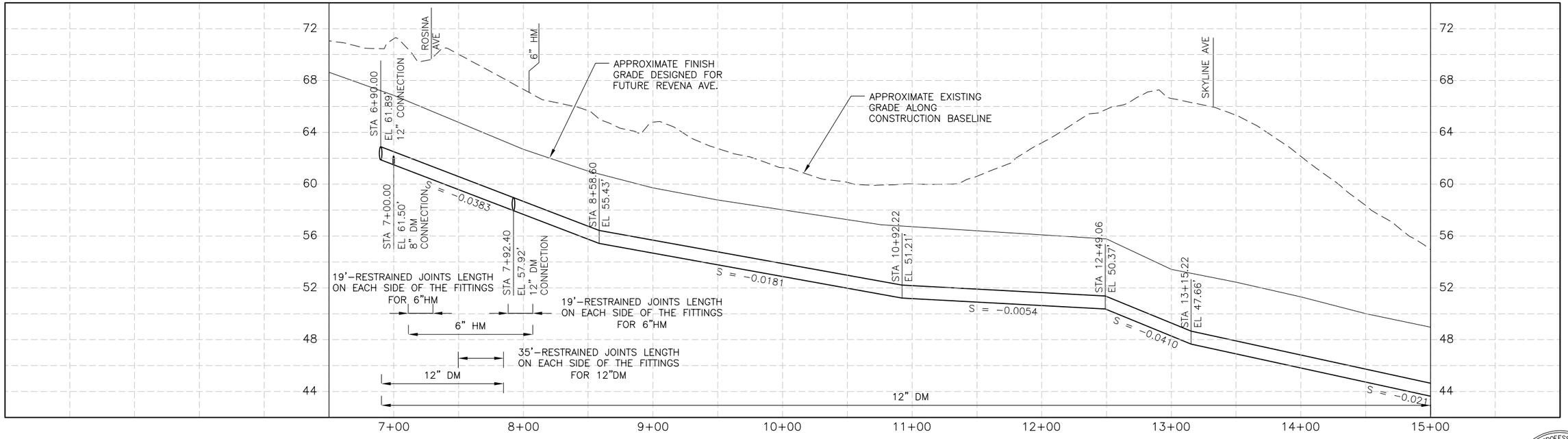

PROFILE ON RAVENA AVE

REGISTERED PROFESSIONAL ENGINEER FAN KAI No. C-60024 Exp. 6-30-04 CIVIL STATE OF CALIFORNIA

REV	DATE	BY	DESCRIPTION

SCALE: 1"=40' HORIZ; 1"=4' VERT

WARNING: 0 1/2 1 — IF THIS BAR DOES NOT MEASURE 1" THEN DRAWING IS NOT TO SCALE

DESIGNED KFK
DRAWN KFK
CHECKED LZT

SUBMITTED BY
JOHN A. BERGEN — C31069 — LICENSE NO. — 2-16-2004 — DATE
STEVEN J. HYLAND — C23892 — LICENSE NO. — 2-16-2004 — DATE

DIGALERT — DIAL TOLL FREE 1-800-642-2444 AT LEAST TWO DAYS BEFORE YOU DIG — UNDERGROUND SERVICE ALERT OF NORTHERN CALIFORNIA

LOS OSOS COMMUNITY SERVICES DISTRICT

MWH Walnut Creek, California

LOS OSOS WASTEWATER PROJECT
PLAN AND PROFILE – EDS
RAVENA AVENUE
STA 7+00 TO STA 15+00

SHEET B-PP-336

XREF: los_ed_bdr c-ed-dm c-ed-bs x-feat-cerl x-feat-row x-feat-topo c-ed-util c-ed-pp cX-UTIL-all aX-UTIL-all c-ed-ss bn-util-ss an-feat-cnbl an-util-ss dn-util-ss cN-UTIL-SS cn-feat-cnbl bn-feat-cnbl dX-util-all x-sup-topo Morro and Corr Easement
FILE: N:\Projects\los_osos\Collect_Sys\ED\cir\b-pp-336.dwg USER: kxkai Feb 09, 2004 4:24pm Job No: 1481166

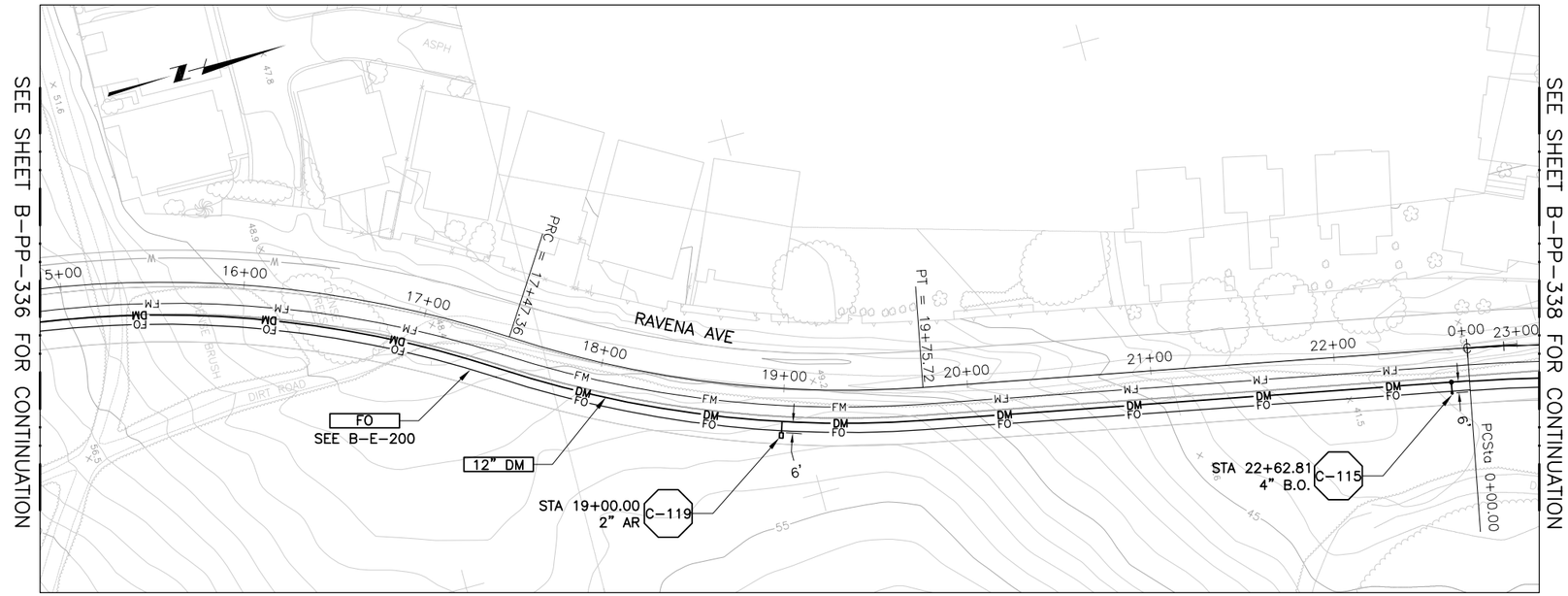

PLAN ON RAVENA AVE

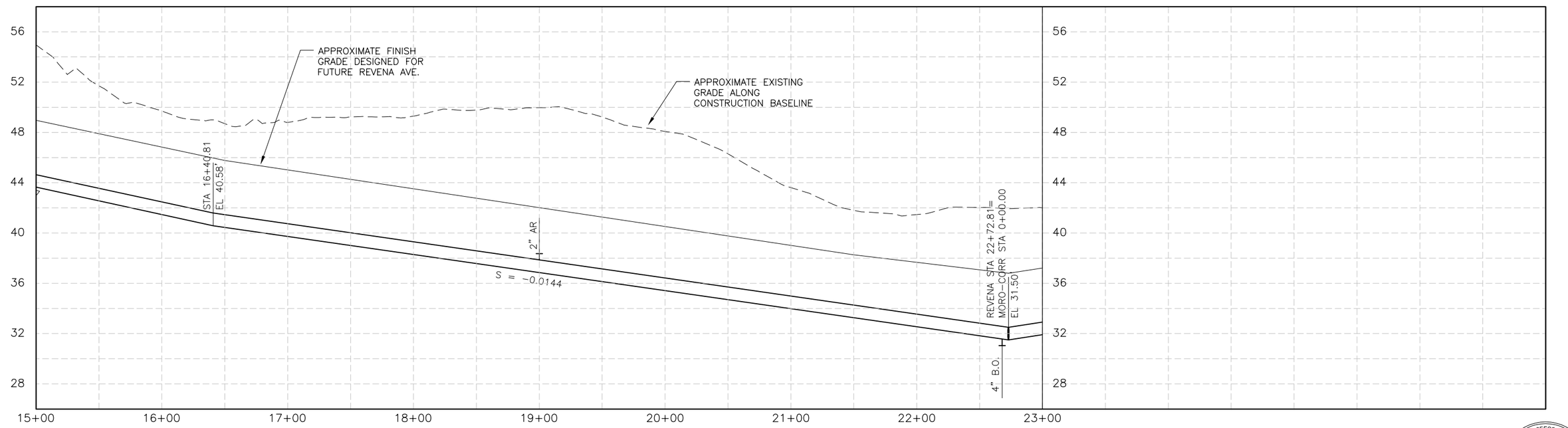

PROFILE ON RAVENA AVE

REGISTERED PROFESSIONAL ENGINEER FAN KAI No. C-60024 Exp. 6-30-04 CIVIL STATE OF CALIFORNIA

REV	DATE	BY	DESCRIPTION

SCALE
1"=40' HORIZ
1"=4' VERT

WARNING
0 1/2 1
IF THIS BAR DOES NOT MEASURE 1" THEN DRAWING IS NOT TO SCALE

DESIGNED KFK
DRAWN KFK
CHECKED LZT

SUBMITTED BY
JOHN A. BERGEN — C31069 — LICENSE NO. — 2-16-2004 — DATE
STEVEN J. HYLAND — C23892 — LICENSE NO. — 2-16-2004 — DATE

DIGALERT
DIAL TOLL FREE 1-800-642-2444 AT LEAST TWO DAYS BEFORE YOU DIG
UNDERGROUND SERVICE ALERT OF NORTHERN CALIFORNIA

LOS OSOS COMMUNITY SERVICES DISTRICT

MWH Walnut Creek, California

LOS OSOS WASTEWATER PROJECT
PLAN AND PROFILE – EDS
RAVENA AVENUE
STA 15+00 TO STA 23+00

SHEET
B-PP-337

XREF: los_ed_bdr c-ed-dtn c-ed-bs x-feat-cerl x-feat-row x-feat-topo c-ed-util c-ed-pp cX-UTIL-all aX-UTIL-all c-ed-ss bn-util-ss an-feat-cnbl an-util-ss dn-util-ss cN-UTIL-SS cn-feat-cnbl bn-feat-cnbl dX-util-all x-sup-topo Morro and Corr Easement
FILE: N:\Projects\los_osos\Collect_Sys\ED\cir\b-pp-337.dwg USER: kxkai Feb 09, 2004 4:26pm Job No: 1481166

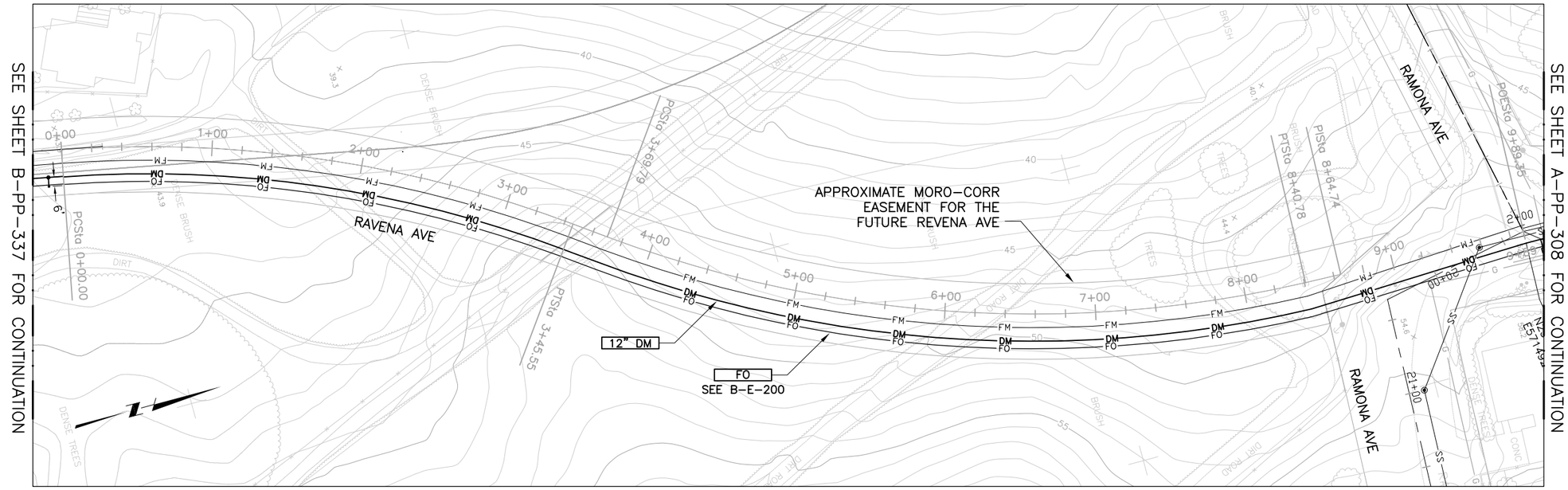

PLAN ON RAVENA AVE

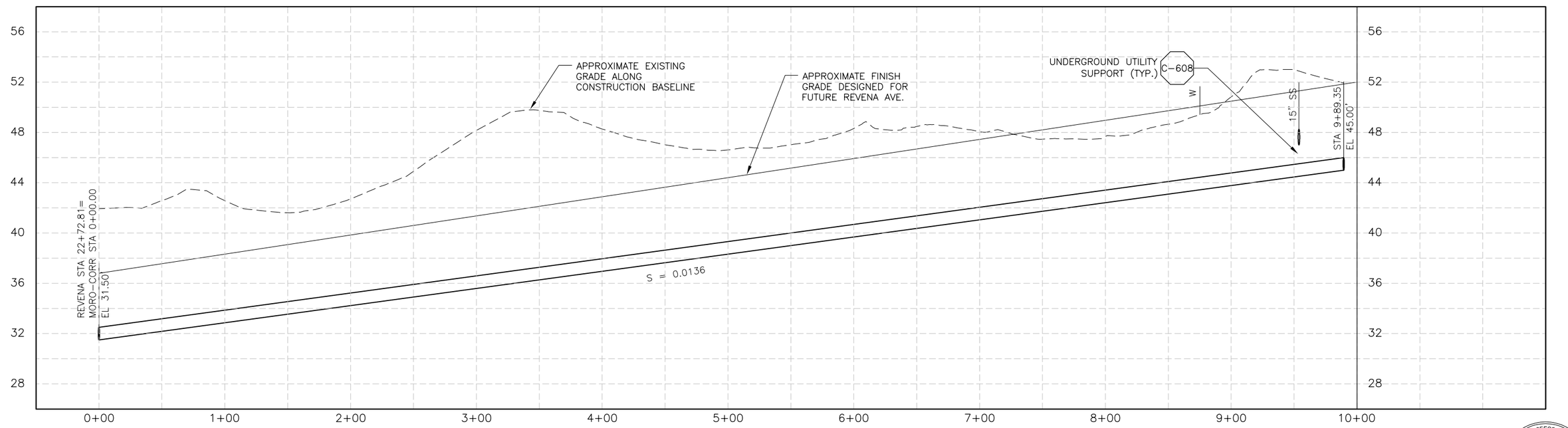

PROFILE ON RAVENA AVE

REGISTERED PROFESSIONAL ENGINEER FAN KAI No. C-60024 Exp. 6-30-04 CIVIL STATE OF CALIFORNIA

REV	DATE	BY	DESCRIPTION

SCALE: 1"=40' HORIZ; 1"=4' VERT

WARNING: 0 1/2 1 — IF THIS BAR DOES NOT MEASURE 1" THEN DRAWING IS NOT TO SCALE

DESIGNED KFK
DRAWN KFK
CHECKED LZT

SUBMITTED BY
JOHN A. BERGEN — C31069 — LICENSE NO. — 2-16-2004 — DATE
STEVEN J. HYLAND — C23892 — LICENSE NO. — 2-16-2004 — DATE

DIGALERT — DIAL TOLL FREE 1-800-642-2444 AT LEAST TWO DAYS BEFORE YOU DIG — UNDERGROUND SERVICE ALERT OF NORTHERN CALIFORNIA

LOS OSOS COMMUNITY SERVICES DISTRICT

MWH Walnut Creek, California

LOS OSOS WASTEWATER PROJECT

PLAN AND PROFILE – EDS
RAVENA AVENUE: MORO-CORR
STA 00+00 TO STA 9+89.35

SHEET B-PP-338

XREF: los_ed_bdr c-ed-dtn c-ed-bs x-feat-aerl x-feat-row x-feat-topo c-ed-util c-ed-pp cX-UTIL-all aX-UTIL-all c-ed-ss bn-util-ss an-feat-cnbl an-util-ss dn-util-ss cN-UTIL-SS cn-feat-cnbl bn-feat-cnbl dX-util-all x-sup-topo Morro and Corr Easement
FILE: N:\Projects\los_osos\Collect_Sys\ED\cir\b-pp-338.dwg USER: kxkai Feb 09, 2004 2:56pm Job No: 1481166

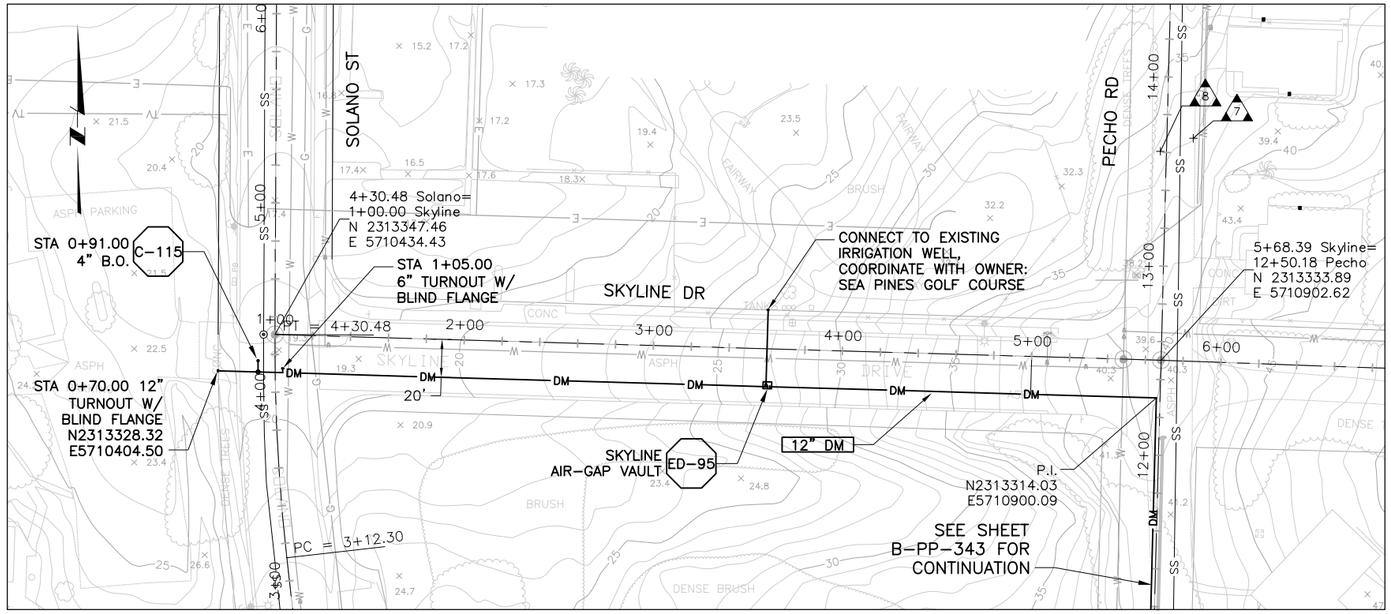

PLAN ON SKYLINE DR

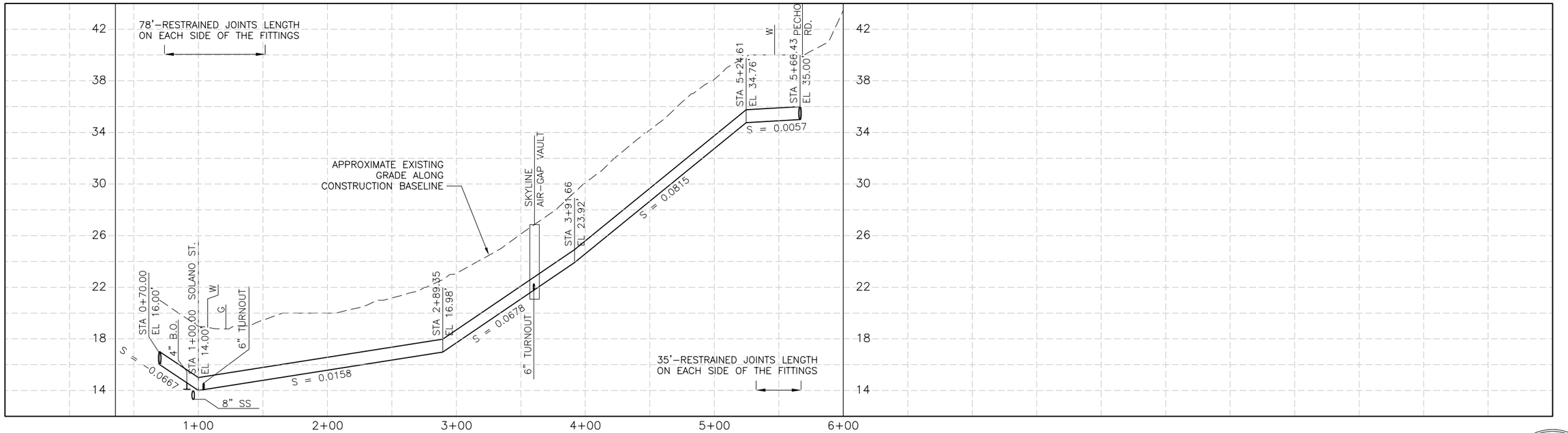

PROFILE ON SKYLINE DR

REGISTERED PROFESSIONAL ENGINEER
FAN KAI
No. C-60024
Exp. 6-30-04
CIVIL
STATE OF CALIFORNIA

REV	DATE	BY	DESCRIPTION

SCALE: 1"=40' HORIZ; 1"=4' VERT

WARNING: 0 1/2 1 — IF THIS BAR DOES NOT MEASURE 1" THEN DRAWING IS NOT TO SCALE

DESIGNED KFK
DRAWN KFK
CHECKED LZT

SUBMITTED BY
JOHN A. BERGEN — C31069 — LICENSE NO. — 2-16-2004 — DATE
STEVEN J. HYLAND — C23892 — LICENSE NO. — 2-16-2004 — DATE

DIGALERT — DIAL TOLL FREE 1-800-642-2444 AT LEAST TWO DAYS BEFORE YOU DIG — UNDERGROUND SERVICE ALERT OF NORTHERN CALIFORNIA

LOS OSOS COMMUNITY SERVICES DISTRICT

MWH Walnut Creek, California

LOS OSOS WASTEWATER PROJECT
PLAN AND PROFILE – EDS
SKYLINE DRIVE
STA 1+00 TO STA 6+00

SHEET B-PP-342

XREF: los_ed_bdr c-ed-bs x-feat-aerl x-feat-row x-feat-topo c-ed-util c-ed-pp cX-UTIL-all aX-UTIL-all c-ed-ss bn-util-ss an-feat-cnbl an-util-ss dn-util-ss cN-UTIL-SS cn-feat-cnbl bn-feat-cnbl dX-util-all x-sup-topo Marro and Carr Easement c-ed-dm
FILE: N:\Projects\los_osos\Collect_Sye\ED\civ\b-pp-342.dwg USER: kxkai Feb 09, 2004 4:29pm Job No: 1481166

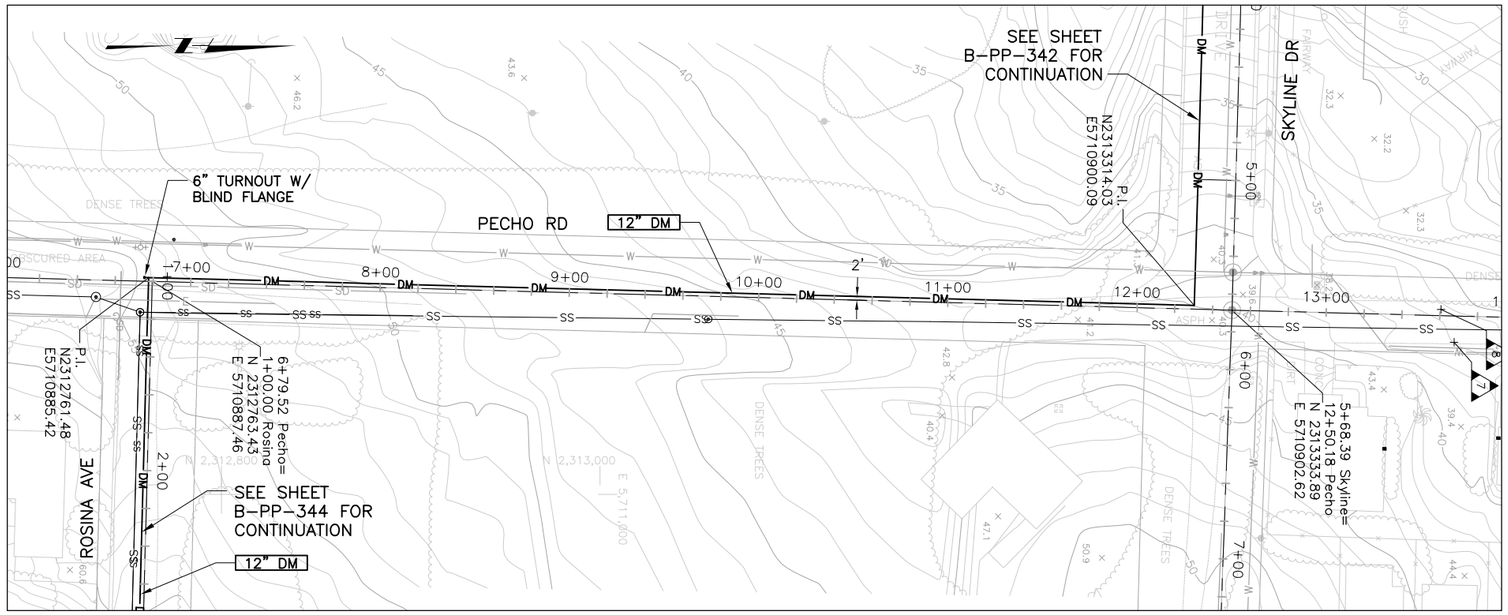

PLAN ON PECHO RD

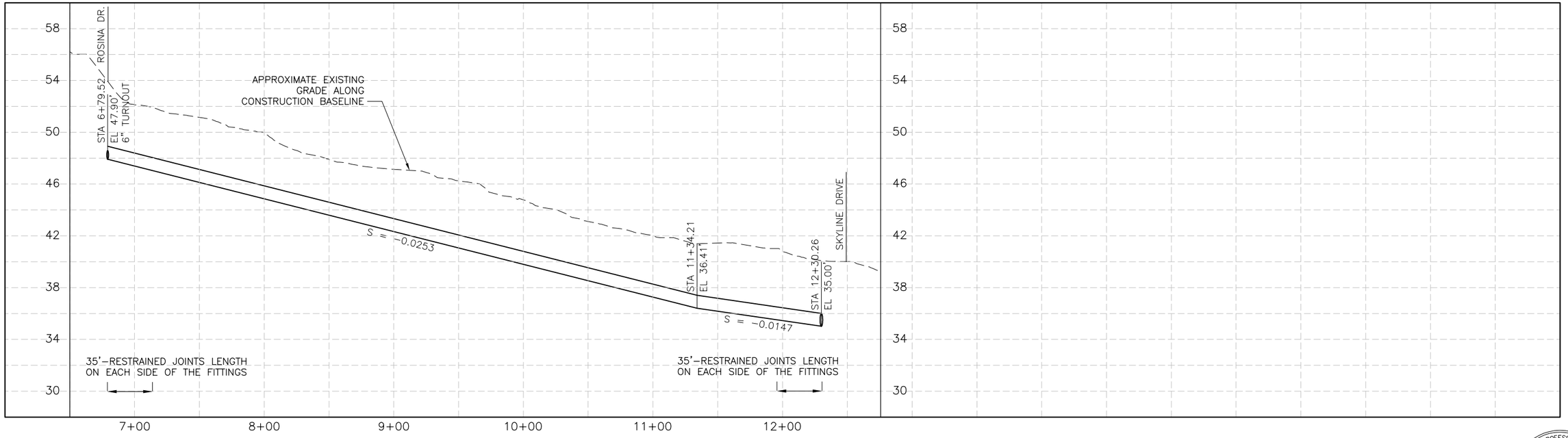

PROFILE ON PECHO RD

REGISTERED PROFESSIONAL ENGINEER
FAN KAI
No. C-60024
Exp. 6-30-04
CIVIL
STATE OF CALIFORNIA

REV	DATE	BY	DESCRIPTION

SCALE
1"=40' HORIZ
1"=4' VERT

WARNING
0 1/2 1
IF THIS BAR DOES NOT MEASURE 1" THEN DRAWING IS NOT TO SCALE

DESIGNED KFK
DRAWN KFK
CHECKED LZT

SUBMITTED BY
JOHN A. BERGEN — C31069 — LICENSE NO. — 2-16-2004 — DATE
STEVEN J. HYLAND — C23892 — LICENSE NO. — 2-16-2004 — DATE

DIGALERT
DIAL TOLL FREE
1-800-642-2444
AT LEAST TWO DAYS BEFORE YOU DIG
UNDERGROUND SERVICE ALERT OF NORTHERN CALIFORNIA

LOS OSOS
COMMUNITY SERVICES DISTRICT

MWH
Walnut Creek, California

LOS OSOS WASTEWATER PROJECT
PLAN AND PROFILE – EDS
PECHO ROAD
STA 6+50 TO STA 13+00

SHEET
B-PP-343

XREF: los_ed_bdr c-ed-dm c-ed-bs x-feat-aerl x-feat-row x-feat-topo c-ed-util c-ed-pp cX-UTIL-all aX-UTIL-all c-ed-ss bn-util-ss an-feat-cnbl bn-feat-cnbl dX-util-all x-sup-topo Morro and Corr Easement
FILE: N:\Projects\los_osos\Collect_Sys\ED\cir\b-pp-343.dwg USER: kxkai Feb 09, 2004 2:57pm Job No: 1481166

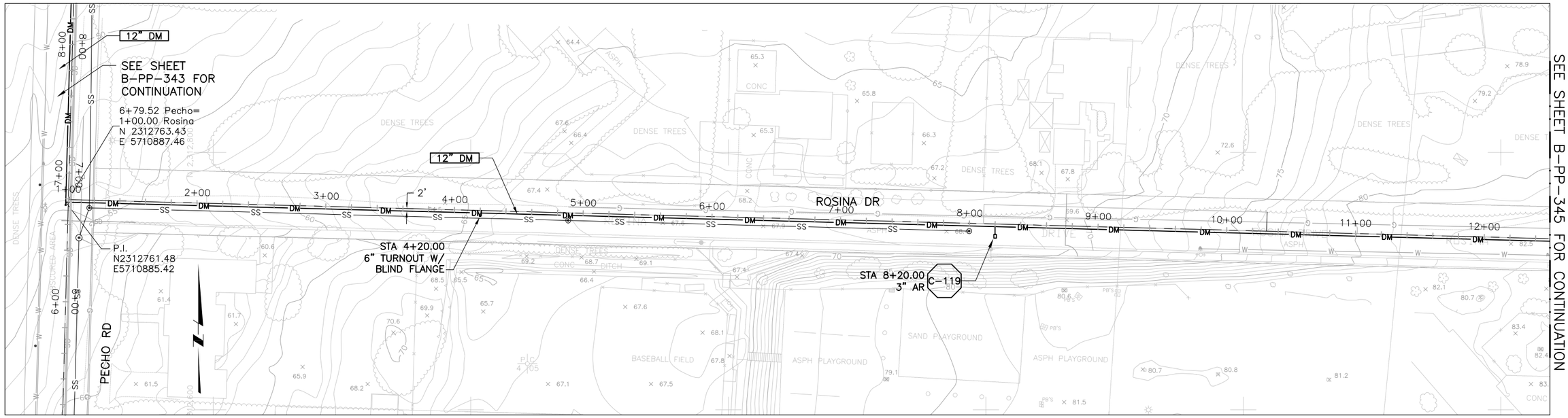

PLAN ON ROSINA DR

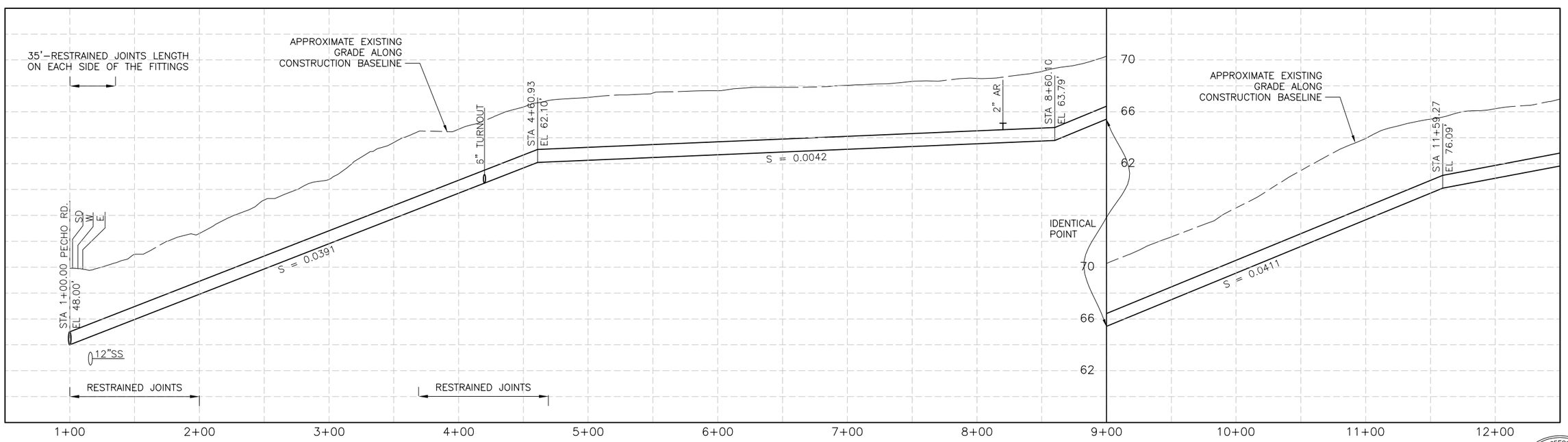

PROFILE ON ROSINA DR

REGISTERED PROFESSIONAL ENGINEER FAN KAI No. C-60024 Exp. 6-30-04 CIVIL STATE OF CALIFORNIA

REV	DATE	BY	DESCRIPTION

SCALE: 1"=40' HORIZ; 1"=4' VERT

WARNING: 0 1/2 1 — IF THIS BAR DOES NOT MEASURE 1" THEN DRAWING IS NOT TO SCALE

DESIGNED KFK
DRAWN KFK
CHECKED LZT

SUBMITTED BY
JOHN A. BERGEN — C31069 — LICENSE NO. — 2-16-2004 — DATE
STEVEN J. HYLAND — C23892 — LICENSE NO. — 2-16-2004 — DATE

DIGALERT — DIAL TOLL FREE 1-800-642-2444 AT LEAST TWO DAYS BEFORE YOU DIG — UNDERGROUND SERVICE ALERT OF NORTHERN CALIFORNIA

LOS OSOS COMMUNITY SERVICES DISTRICT

MWH Walnut Creek, California

LOS OSOS WASTEWATER PROJECT
PLAN AND PROFILE – EDS
ROSINA DRIVE
STA 1+00 TO STA 12+50

SHEET B-PP-344

XREF: los_ed_bdr c-ed-dtn c-ed-bs x-feat-cerl x-feat-row x-feat-topo c-ed-util c-ed-pp cX-UTIL-all aX-UTIL-all c-ed-ss bn-util-ss an-feat-cnbl an-util-ss dn-util-ss cN-UTIL-SS cn-feat-cnbl bn-feat-cnbl dX-util-all x-sup-topo Morro and Corr Easement
FILE: N:\Projects\los_osos\Collect_Sys\ED\cir\b-pp-344.dwg USER: kxkai Feb 09, 2004 2:58pm Job No: 1481166

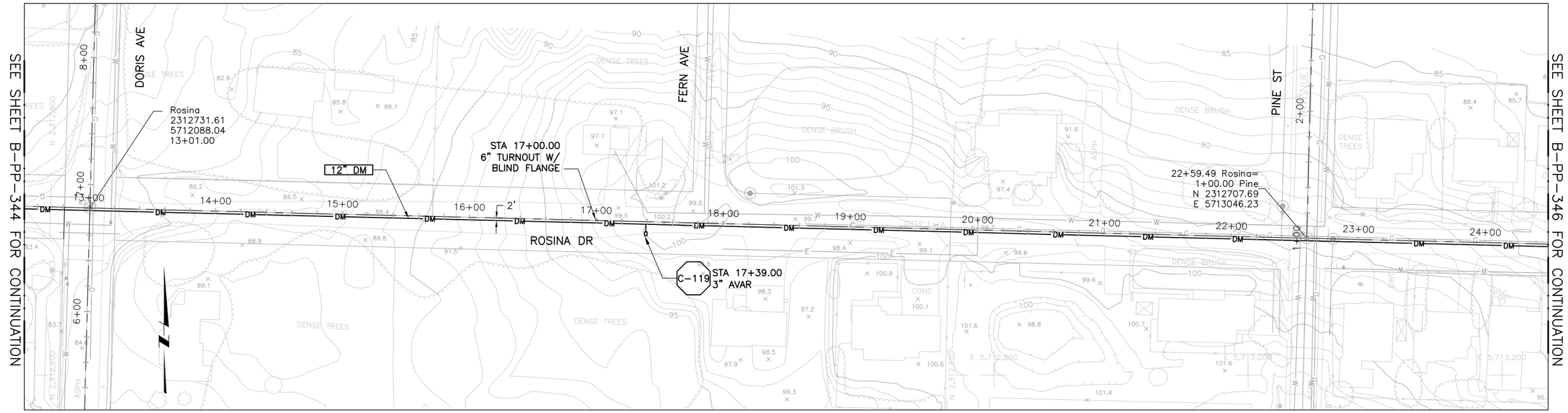

PLAN ON ROSINA DR

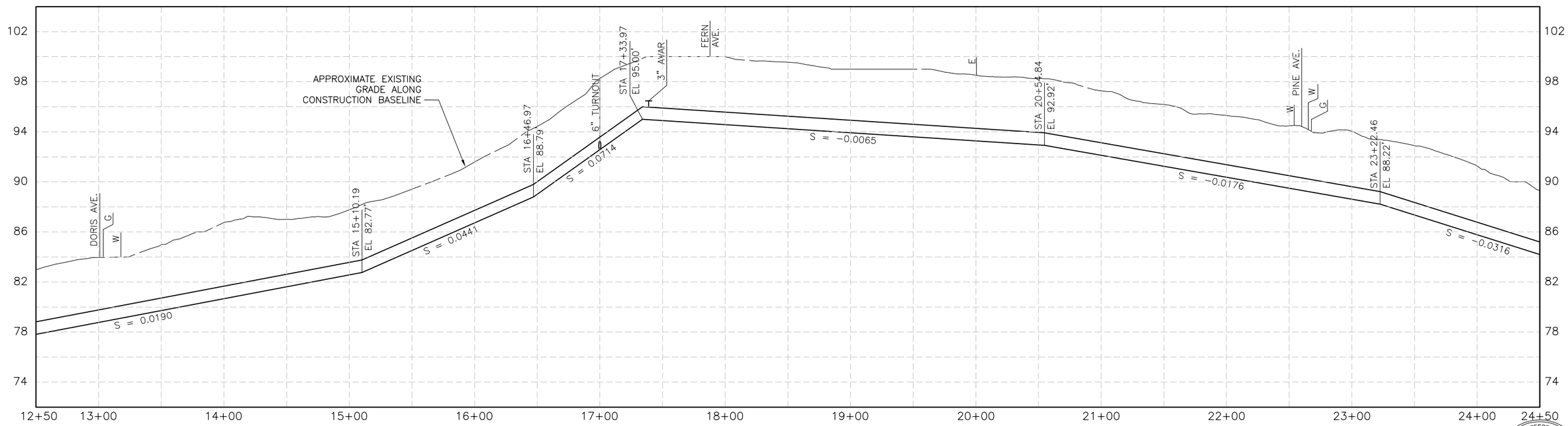

PROFILE ON ROSINA DR

REGISTERED PROFESSIONAL ENGINEER
FAN KAI
No. C-60027
Exp. 6-30-04
CIVIL
STATE OF CALIFORNIA

REV	DATE	BY	DESCRIPTION

SCALE
1"=40' HORIZ
1"=4' VERT

WARNING
0 1/2 1
IF THIS BAR DOES NOT MEASURE 1" THEN DRAWING IS NOT TO SCALE

DESIGNED KFK
DRAWN KFK
CHECKED LZT

SUBMITTED BY
JOHN A BERGEN — C31069 — LICENSE NO. — 2-16-2004 — DATE
STEVEN J. HYLAND — C23892 — LICENSE NO. — 2-16-2004 — DATE

DIGALERT
DIAL TOLL FREE
1-800-642-2444
AT LEAST TWO DAYS BEFORE YOU DIG
UNDERGROUND SERVICE ALERT OF NORTHERN CALIFORNIA

LOS OSOS
COMMUNITY SERVICES DISTRICT

MWH
Walnut Creek, California

LOS OSOS WASTEWATER PROJECT
PLAN AND PROFILE – EDS
ROSINA DRIVE
STA 12+50 TO STA 24+50

SHEET
B-PP-345

XREF: los_ed_bdr c-ed-drn c-ed-bs x-feat-aerl x-feat-row x-feat-topo c-ed-util c-ed-pp cX-UTIL-all cX-UTIL-all c-ed-ss bn-util-ss an-feat-cnbl an-util-ss dn-util-ss cN-UTIL-SS cn-feat-cnbl bn-feat-cnbl dX-util-all x-sup-topo Morro and Corr Easement
FILE: N:\Projects\los_osos\Collect_Sys\ED\civil\b-pp-345.dwg USER: kxkai Feb 09, 2004 4:34pm Job No: 1481166

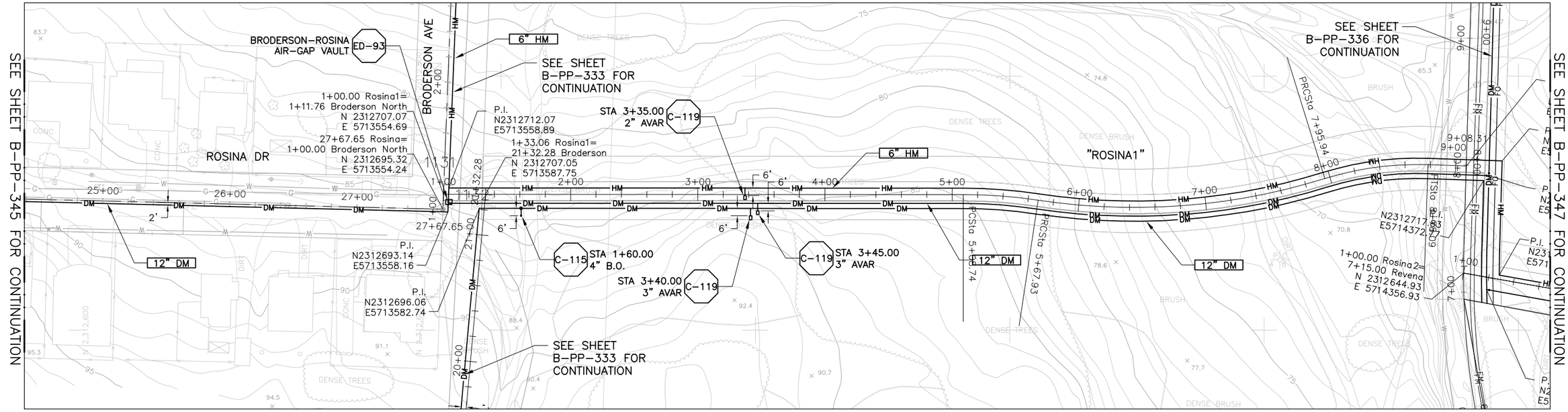

PLAN ON ROSINA DR

PLAN ON "ROSINA1"

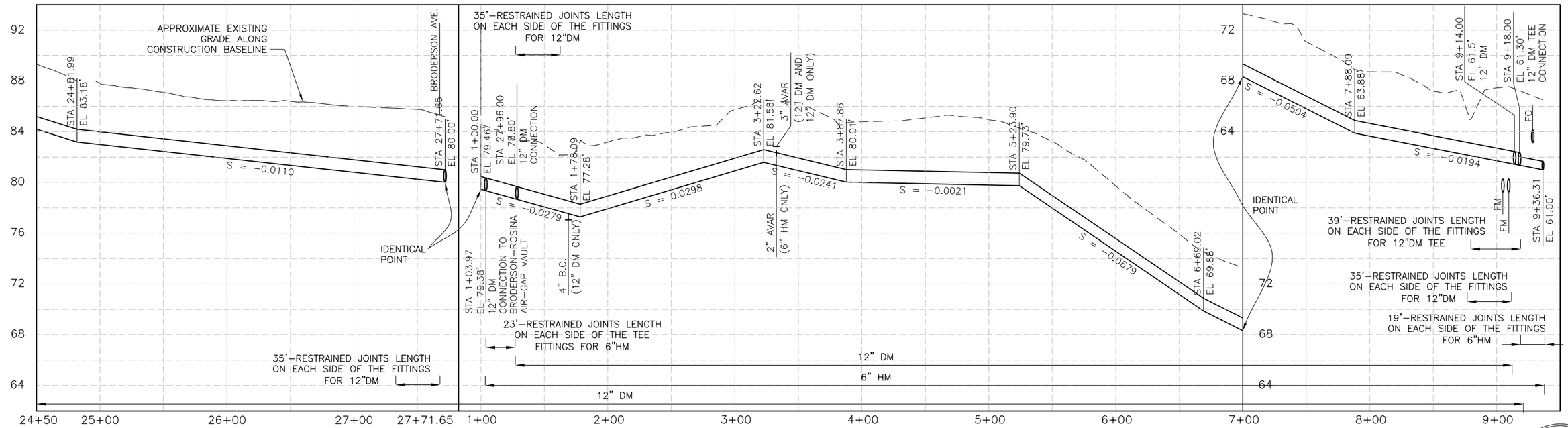

PROFILE ON ROSINA DR

PROFILE ON "ROSINA1"

REGISTERED PROFESSIONAL ENGINEER FAN KAI No. C-60023 Exp. 6-30-04 CIVIL STATE OF CALIFORNIA

REV	DATE	BY	DESCRIPTION

SCALE: 1"=40' HORIZ; 1"=4' VERT

WARNING: 0 1/2 1 — IF THIS BAR DOES NOT MEASURE 1" THEN DRAWING IS NOT TO SCALE

DESIGNED KFK
DRAWN KFK
CHECKED LZT

SUBMITTED BY
JOHN A. BERGEN — C31069 — LICENSE NO. — 2-16-2004 — DATE
STEVEN J. HYLAND — C23892 — LICENSE NO. — 2-16-2004 — DATE

DIGALERT — DIAL TOLL FREE 1-800-642-2444 AT LEAST TWO DAYS BEFORE YOU DIG — UNDERGROUND SERVICE ALERT OF NORTHERN CALIFORNIA

LOS OSOS COMMUNITY SERVICES DISTRICT

MWH Walnut Creek, California

LOS OSOS WASTEWATER PROJECT

PLAN AND PROFILE – EDS
ROSINA DRIVE AND "ROSINA1"
STA 23+50 TO STA 9+00

SHEET B-PP-346

XREF: los_ed_bdr c-ed-dm c-ed-bs x-feat-deri x-feat-row x-feat-topo c-ed-ss bn-feat-cnbl bn-util-ss cn-feat-cnbl cn-feat-cnbl an-util-ss dn-util-ss
FILE: N:\Projects\los_osos\Collect_Sys\ED\civ\b-pp-346.dwg USER: kxkai Feb 09, 2004 4:43pm Job No: 1481166
c-ed-util c-ed-util c-ed-pp aX-UTIL-all cN-UTIL-SS cX-UTIL-all dX-util-all x-sup-topo Morro and Corr Easement

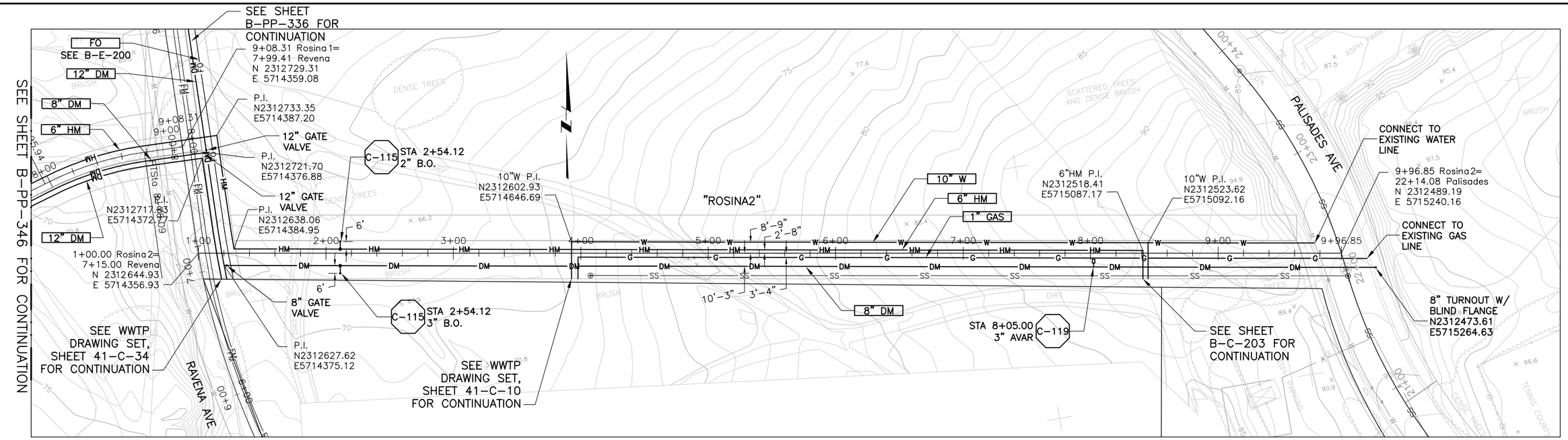

PLAN ON "ROSINA2"

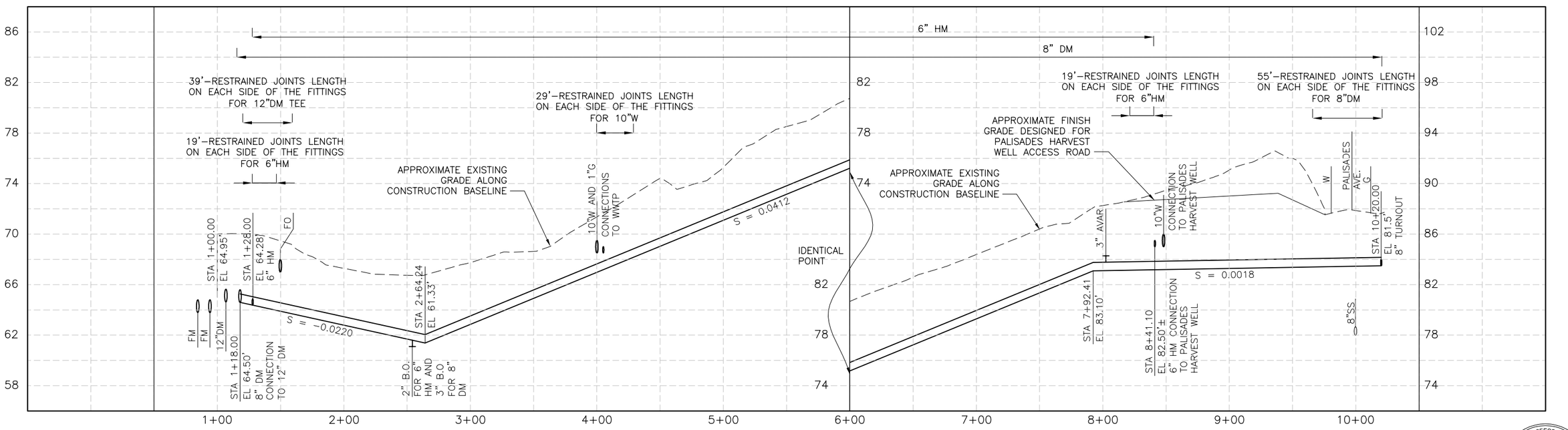

PROFILE ON "ROSINA2"

REGISTERED PROFESSIONAL ENGINEER FAN KAI No. C-60024 Exp. 6-30-04 CIVIL STATE OF CALIFORNIA

REV	DATE	BY	DESCRIPTION

SCALE: 1"=40' HORIZ; 1"=4' VERT

WARNING: 0 1/2 1 — IF THIS BAR DOES NOT MEASURE 1" THEN DRAWING IS NOT TO SCALE

DESIGNED KFK
DRAWN KFK
CHECKED MWH

SUBMITTED BY
JOHN A. BERGEN — C31069 — LICENSE NO. — 2-16-2004 DATE
STEVEN J. HYLAND — C23892 — LICENSE NO. — 2-16-2004 DATE

DIGALERT — DIAL TOLL FREE 1-800-642-2444 AT LEAST TWO DAYS BEFORE YOU DIG — UNDERGROUND SERVICE ALERT OF NORTHERN CALIFORNIA

LOS OSOS COMMUNITY SERVICES DISTRICT

MWH Walnut Creek, California

LOS OSOS WASTEWATER PROJECT
PLAN AND PROFILE – EDS "ROSINA2"
STA 1+00 TO STA 10+00

SHEET B-PP-347

XREF: los_ed_bdr c-ed-dm c-ed-bs x-feat-aerl x-feat-row x-feat-topo c-ed-util c-ed-pp cX-UTIL-all aX-UTIL-all c-ed-ss bn-util-ss an-feat-cnbl an-util-ss dn-util-ss cN-UTIL-SS cn-feat-cnbl bn-feat-cnbl x-sup-topo dX-util-all Morro and Corr Easement
FILE: N:\Projects\los_osos\Collect_Sys\ED\cir\b-pp-347.dwg USER: kxkai Feb 09, 2004 4:45pm Job No: 1481166

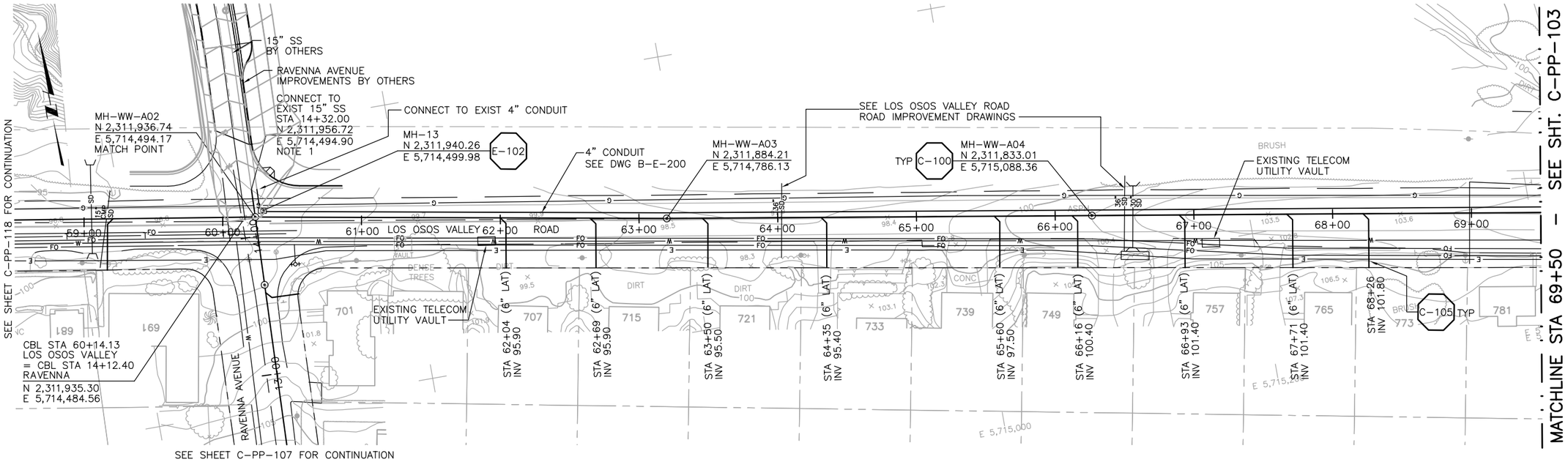

PLAN ON RAVENNA AVENUE AND LOS OSOS VALLEY ROAD

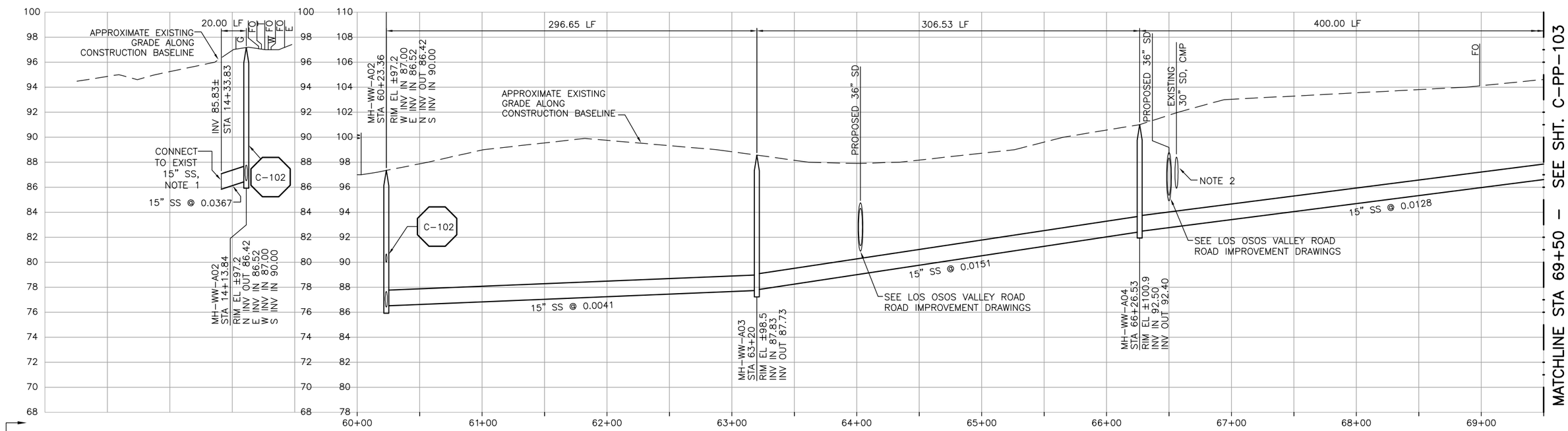

PROFILE ON RAVENNA AVENUE

PROFILE ON LOS OSOS VALLEY ROAD

NOTES:

1. CONTRACTOR SHALL VERIFY LOCATION AND DEPTH OF EXISTING 15" SS TO NORTH PRIOR TO BEGINNING WORK.
2. CONTRACTOR SHALL REMOVE AND DISPOSE OF EXISTING SD AS NECESSARY. PLUG EXPOSED ENDS WITH CONCRETE PRIOR TO BACKFILLING.

DIGALERT — DIAL TOLL FREE 1-800-642-2444 — AT LEAST TWO DAYS BEFORE YOU DIG — UNDERGROUND SERVICE ALERT OF NORTHERN CALIFORNIA

REGISTERED PROFESSIONAL ENGINEER — MICHAEL H. MAY — No. C42546 — Exp. 3-31-04 — CIVIL — STATE OF CALIFORNIA

REV	DATE	BY	DESCRIPTION

SCALE: HORZ: 1"=40' VERT: 1"=4'

WARNING: 0 1/2 1 — IF THIS BAR DOES NOT MEASURE 1" THEN DRAWING IS NOT TO SCALE

DESIGNED MDT/MHM
DRAWN JCM
CHECKED GEH

SUBMITTED BY
JOHN A. BERGEN — C31069 LICENSE NO. — 2-16-2004 DATE
STEVEN J. HYLAND — C23892 LICENSE NO. — 2-16-2004 DATE

LOS OSOS COMMUNITY SERVICES DISTRICT

MWH Walnut Creek, California

RMC Raines, Melton & Carella, Inc.

LOS OSOS WASTEWATER PROJECT
PLAN AND PROFILE
RAVENNA – 14+13.84 TO 14+33.83
LOS OSOS – 60+23.36 TO 69+50

SHEET C-PP-102

C:\Program Files\ACAD2000\CADRMC\LOSOSOS\C-PP-102.dwg, Layout1, Feb 04, 2004 10:11pm, John

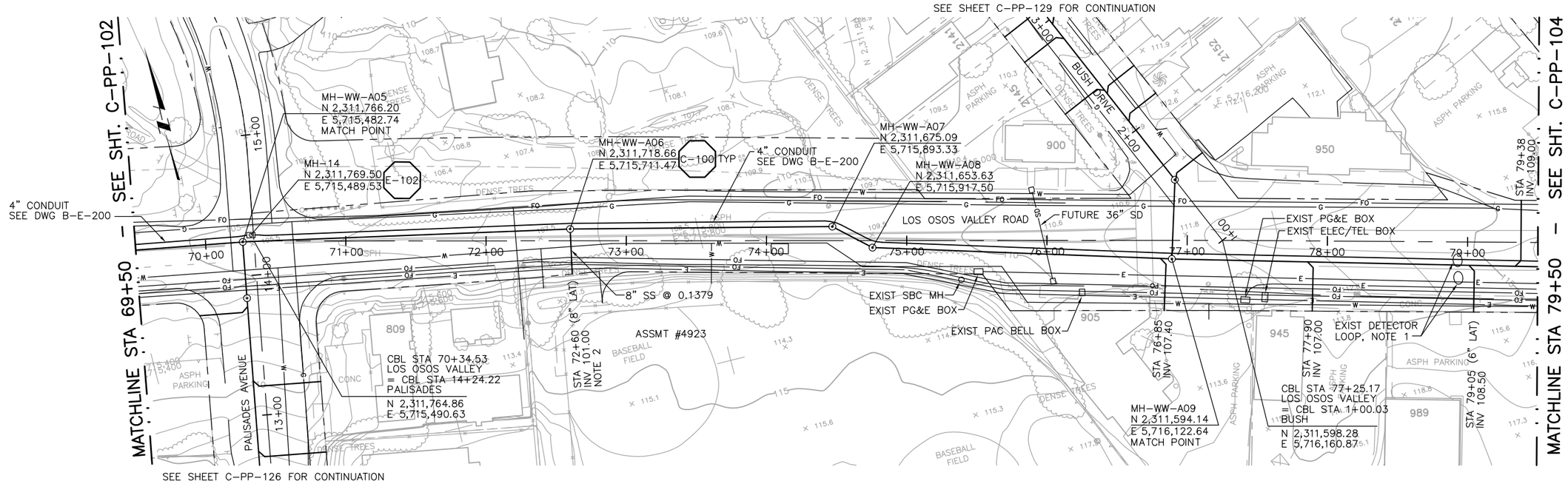

PLAN ON LOS OSOS VALLEY ROAD

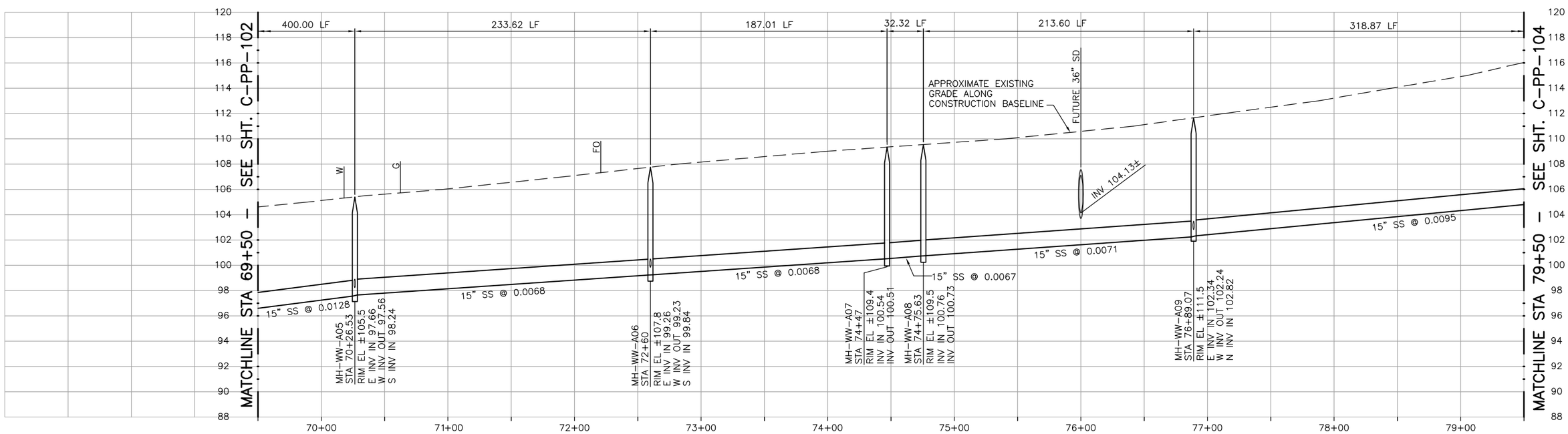

CONSTRUCTION BASELINE STATION

NOTES:

1. CONTRACTOR SHALL REPAIR EXISTING TRAFFIC CONTROL SYSTEM, INCLUDING INSTALLING NEW DETECTOR LOOPS, WHERE CONSTRUCTION RESULTS IN DAMAGE TO EXISTING SYSTEM. CONTRACTOR SHALL COORDINATE REPAIRS WITH COUNTY OF SAN LUIS OBISPO.
2. CONTRACTOR SHALL CAP END OF STUB SS AND STAKE FOR FUTURE CONNECTION.

PROFILE ON LOS OSOS VALLEY ROAD

DIGALERT — DIAL TOLL FREE 1-800-642-2444 AT LEAST TWO DAYS BEFORE YOU DIG — UNDERGROUND SERVICE ALERT OF NORTHERN CALIFORNIA

REGISTERED PROFESSIONAL ENGINEER — MICHAEL H. MAY — No. C42546 — Exp. 3-31-04 — CIVIL — STATE OF CALIFORNIA

REV	DATE	BY	DESCRIPTION

SCALE: HORZ: 1"=40' VERT: 1"=4'

WARNING: 0 1/2 1 — IF THIS BAR DOES NOT MEASURE 1" THEN DRAWING IS NOT TO SCALE

DESIGNED MDT/MHM
DRAWN JCM
CHECKED GEH

SUBMITTED BY
JOHN A. BERGEN — C31069 LICENSE NO. — 2-16-2004 DATE
STEVEN J. HYLAND — C23892 LICENSE NO. — 2-16-2004 DATE

LOS OSOS COMMUNITY SERVICES DISTRICT

MWH Walnut Creek, California

RMC Raines, Melton & Carella, Inc.

LOS OSOS WASTEWATER PROJECT
PLAN AND PROFILE
LOS OSOS VALLEY ROAD
STA 69+50 TO STA 79+50

SHEET C-PP-103

C:\Program Files\ACAD2000\CADRMC\ALOSOSOS\C-PP-103.dwg, Layout1, Feb 04, 2004 10:12pm, John

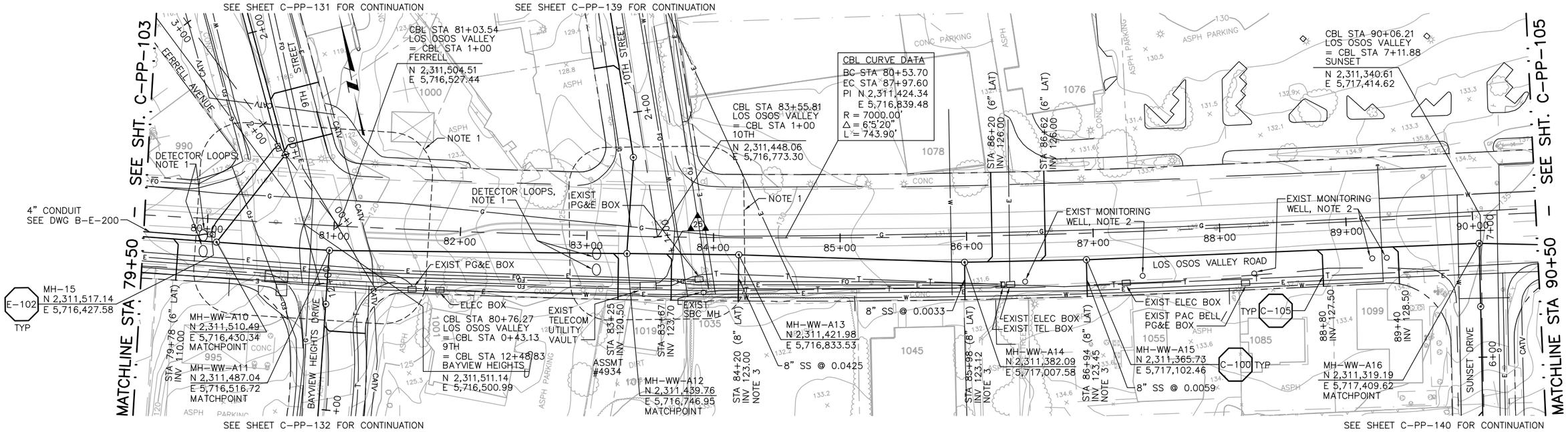

PLAN ON LOS OSOS VALLEY ROAD

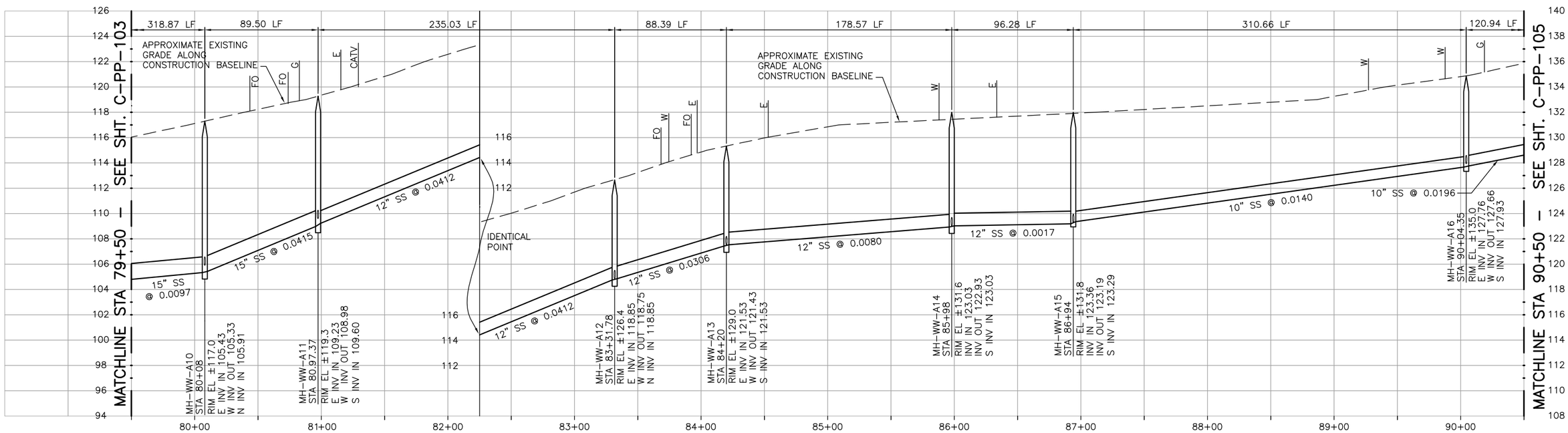

CONSTRUCTION BASELINE STATION

PROFILE ON LOS OSOS VALLEY ROAD

NOTES:

1. CONTRACTOR SHALL REPAIR EXISTING TRAFFIC CONTROL SYSTEM, INCLUDING INSTALLING NEW DETECTOR LOOPS, WHERE CONSTRUCTION RESULTS IN DAMAGE TO EXISTING SYSTEM. CONTRACTOR SHALL COORDINATE REPAIRS WITH COUNTY OF SAN LUIS OBISPO.
2. NOT ALL MONITORING WELLS ARE SHOWN.
3. CONTRACTOR SHALL CAP END OF STUB SS AND STAKE FOR FUTURE CONNECTION.

DIGALERT — DIAL TOLL FREE 1-800-642-2444 — AT LEAST TWO DAYS BEFORE YOU DIG — UNDERGROUND SERVICE ALERT OF NORTHERN CALIFORNIA

REGISTERED PROFESSIONAL ENGINEER — MICHAEL H. MARCHESE — No. C42546 — Exp. 3-31-04 — CIVIL — STATE OF CALIFORNIA

REV	DATE	BY	DESCRIPTION

SCALE: HORZ: 1"=40' VERT: 1"=4'

WARNING: 0 1/2 1 — IF THIS BAR DOES NOT MEASURE 1" THEN DRAWING IS NOT TO SCALE

DESIGNED MDT/MHM
DRAWN JCM
CHECKED GEH

SUBMITTED BY
JOHN A. BERGEN — C31069 LICENSE NO. — 2-16-2004 DATE
STEVEN J. HYLAND — C23892 LICENSE NO. — 2-16-2004 DATE

LOS OSOS COMMUNITY SERVICES DISTRICT

MWH Walnut Creek, California

RMC Raines, Melton & Carella, Inc.

LOS OSOS WASTEWATER PROJECT
PLAN AND PROFILE
LOS OSOS VALLEY ROAD
STA 79+50 TO STA 90+50

SHEET C-PP-104

C:\Program Files\ACAD2000\CADRMC\ALOSOSOS\C-PP-104.dwg, Layout1, Feb 04, 2004 10:14pm, John

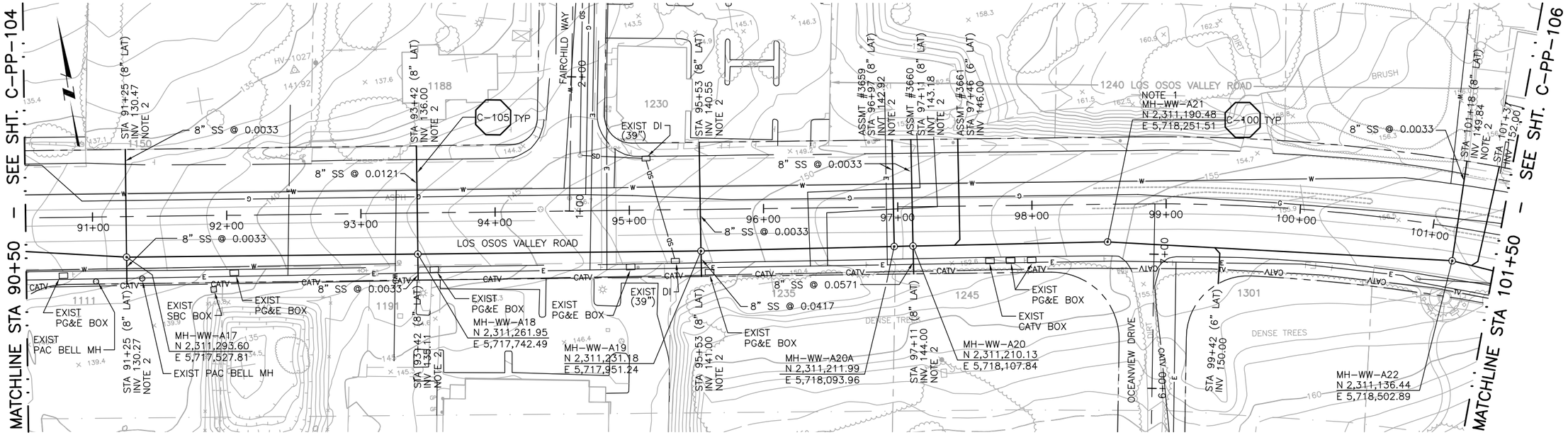

PLAN ON LOS OSOS VALLEY ROAD

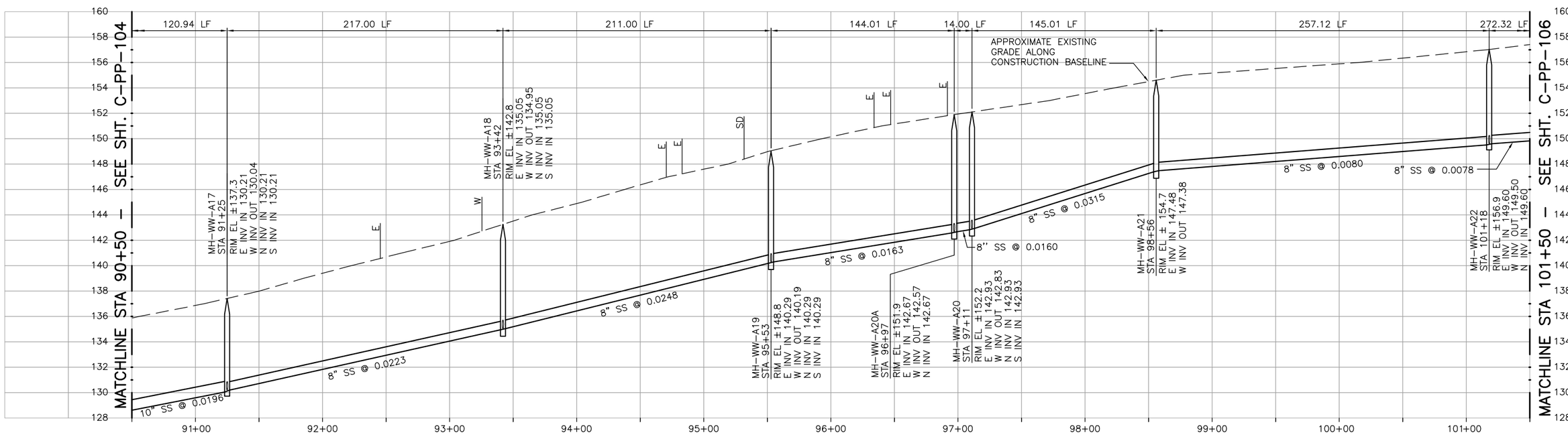

CONSTRUCTION BASELINE STATION

NOTES:

1. CONTRACTOR SHALL NOTE THAT MAPPING PREDATES DEVELOPMENT AT 1240 LOS OSOS VALLEY ROAD. CONTRACTOR SHALL FIELD VERIFY EXISTING CONDITIONS.
2. CONTRACTOR SHALL CAP END OF STUB SS AND STAKE FOR FUTURE CONNECTION.

PROFILE ON LOS OSOS VALLEY ROAD

DIGALERT — DIAL TOLL FREE 1-800-642-2444 — AT LEAST TWO DAYS BEFORE YOU DIG — UNDERGROUND SERVICE ALERT OF NORTHERN CALIFORNIA

REGISTERED PROFESSIONAL ENGINEER — MICHAEL H. MARCHESE — No. C42546 — Exp. 3-31-04 — CIVIL — STATE OF CALIFORNIA

REV	DATE	BY	DESCRIPTION

SCALE: HORZ: 1"=40' VERT: 1"=4'

WARNING: 0 1/2 1 — IF THIS BAR DOES NOT MEASURE 1" THEN DRAWING IS NOT TO SCALE

DESIGNED MDT/MHM
DRAWN JCM
CHECKED GEH

SUBMITTED BY
JOHN A. BERGEN — C31069 LICENSE NO. — 2-16-2004 DATE
STEVEN J. HYLAND — C23892 LICENSE NO. — 2-16-2004 DATE

LOS OSOS COMMUNITY SERVICES DISTRICT

MWH Walnut Creek, California

RMC Raines, Melton & Carella, Inc.

LOS OSOS WASTEWATER PROJECT
PLAN AND PROFILE
LOS OSOS VALLEY ROAD
STA 90+50 TO STA 101+50

SHEET C-PP-105

C:\Program Files\AutoCAD2000\CADRMC\ALOSOSOS\C-PP-105.dwg, Layout1, Feb 04, 2004 10:15pm, John

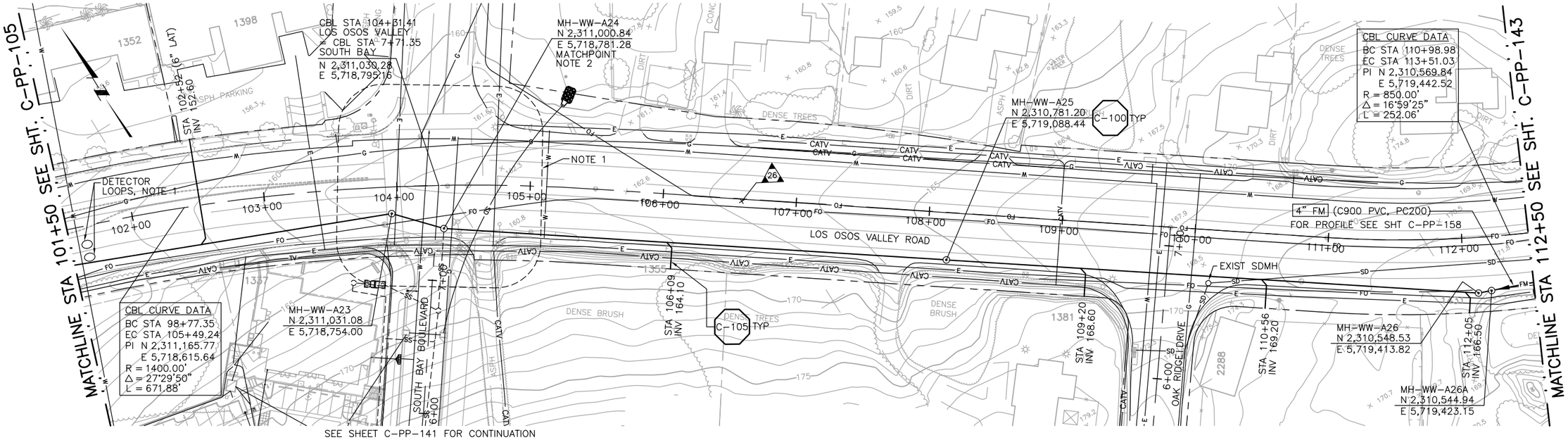

PLAN ON LOS OSOS VALLEY ROAD

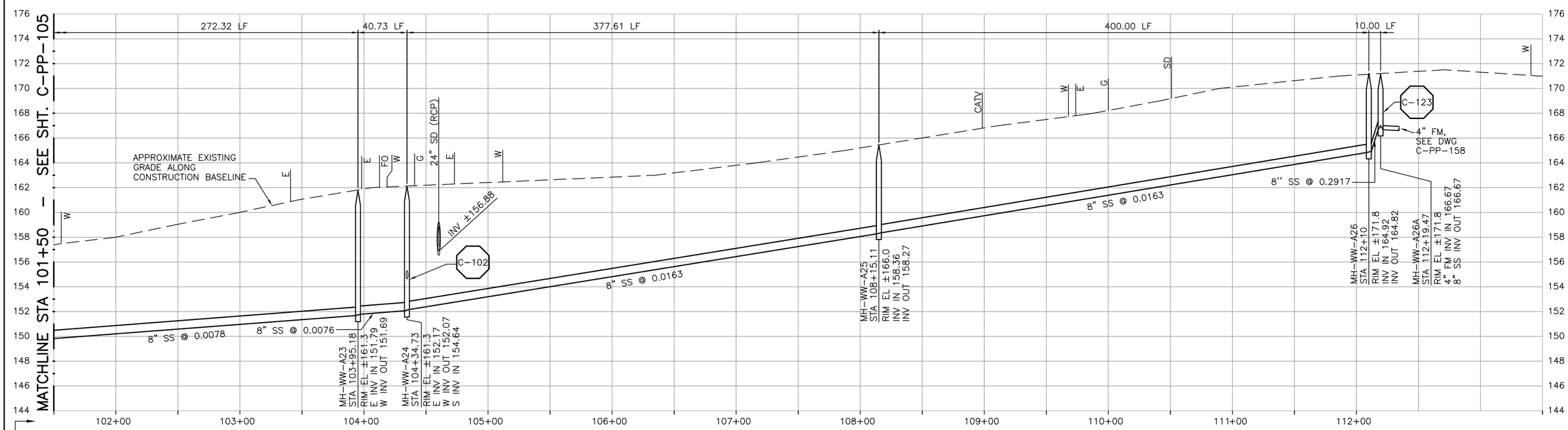

NOTES:

1. CONTRACTOR SHALL REPAIR EXISTING TRAFFIC CONTROL SYSTEM, INCLUDING INSTALLING NEW DETECTOR LOOPS, WHERE CONSTRUCTION RESULTS IN DAMAGE TO EXISTING SYSTEM. CONTRACTOR SHALL COORDINATE REPAIRS WITH COUNTY OF SAN LUIS OBISPO.
2. MH-WW-A25 SHALL BE CONSTRUCTED ON EXISTING 8" PVC (SDR 35) SS FROM SOUTH . CONTRACTOR SHALL VERIFY.

PROFILE ON LOS OSOS VALLEY ROAD

DIGALERT
DIAL TOLL FREE
1-800-642-2444
AT LEAST TWO DAYS BEFORE YOU DIG
UNDERGROUND SERVICE ALERT OF NORTHERN CALIFORNIA

REGISTERED PROFESSIONAL ENGINEER MICHAEL H. MASTERS No. C42546 Exp. 3-31-04 CIVIL STATE OF CALIFORNIA

REV	DATE	BY	DESCRIPTION

SCALE: HORZ: 1"=40' VERT: 1"=4'

WARNING: 0 1/2 1 — IF THIS BAR DOES NOT MEASURE 1" THEN DRAWING IS NOT TO SCALE

DESIGNED MDT/MHM
DRAWN JCM
CHECKED GEH

SUBMITTED BY
JOHN A. BERGEN — C31069 LICENSE NO. — 2-16-2004 DATE
STEVEN J. HYLAND — C23892 LICENSE NO. — 2-16-2004 DATE

LOS OSOS COMMUNITY SERVICES DISTRICT

MWH Walnut Creek, California

RMC Raines, Melton & Carella, Inc.

LOS OSOS WASTEWATER PROJECT
PLAN AND PROFILE
LOS OSOS VALLEY ROAD
STA 101+50 TO STA 112+50

SHEET C-PP-106

C:\Program Files\ACAD2000\CADRMC\LOSOSOS\C-PP-106.dwg, Layout1, Feb 04, 2004 10:16pm, John

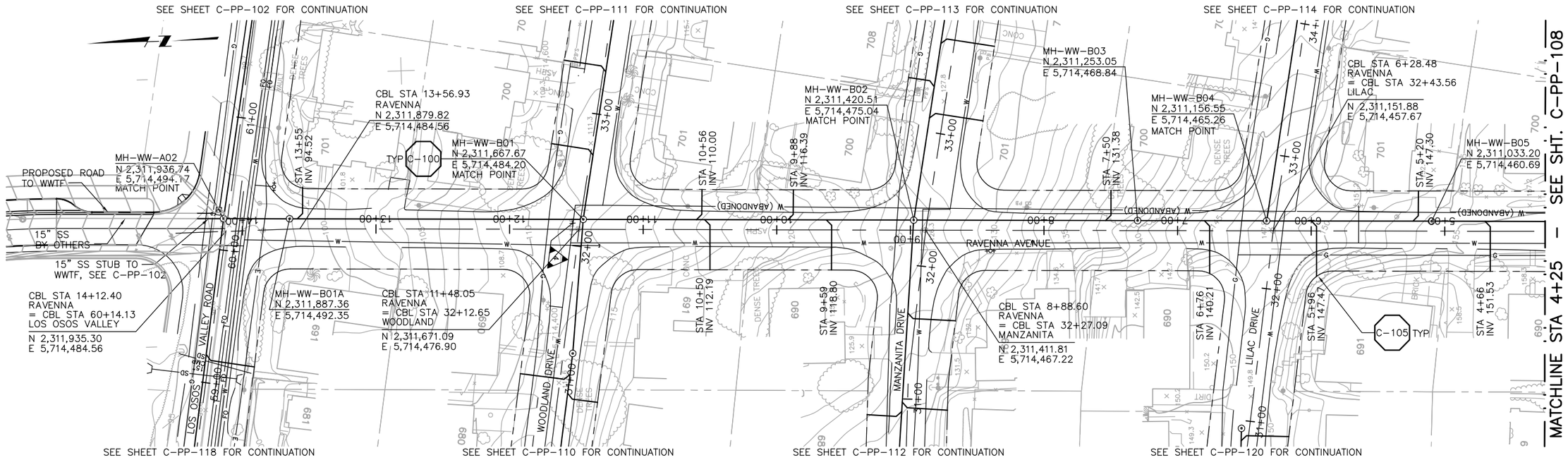

PLAN ON RAVENNA AVENUE

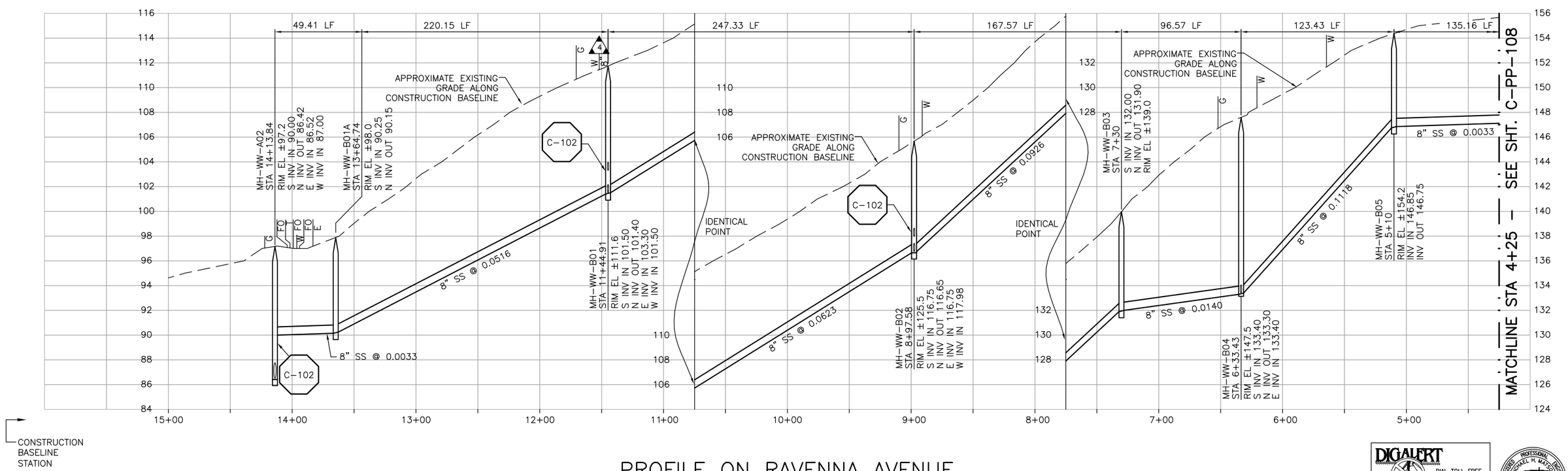

PROFILE ON RAVENNA AVENUE

DIGALERT
DIAL TOLL FREE 1-800-642-2444
AT LEAST TWO DAYS BEFORE YOU DIG
UNDERGROUND SERVICE ALERT OF NORTHERN CALIFORNIA

REGISTERED PROFESSIONAL ENGINEER
No. C42546
Exp. 3-31-04
CIVIL
STATE OF CALIFORNIA

REV	DATE	BY	DESCRIPTION

SCALE
HORZ: 1"=40'
VERT: 1"=4'

WARNING
0 1/2 1
IF THIS BAR DOES NOT MEASURE 1" THEN DRAWING IS NOT TO SCALE

DESIGNED MDT/MHM
DRAWN JCM
CHECKED GEH

SUBMITTED BY
JOHN A. BERGEN — C31069 LICENSE NO. — 2-16-2004 DATE
STEVEN J. HYLAND — C23892 LICENSE NO. — 2-16-2004 DATE

LOS OSOS COMMUNITY SERVICES DISTRICT

MWH Walnut Creek, California

RMC Raines, Melton & Carella, Inc.

LOS OSOS WASTEWATER PROJECT
PLAN AND PROFILE
RAVENNA AVENUE
STA 14+13.84 TO STA 4+25

SHEET C-PP-107

C:\Program Files\ACAD2000\CADRMC\ALOSOSOS\C-PP-107.dwg, Layout1, Feb 04, 2004 10:20pm, John

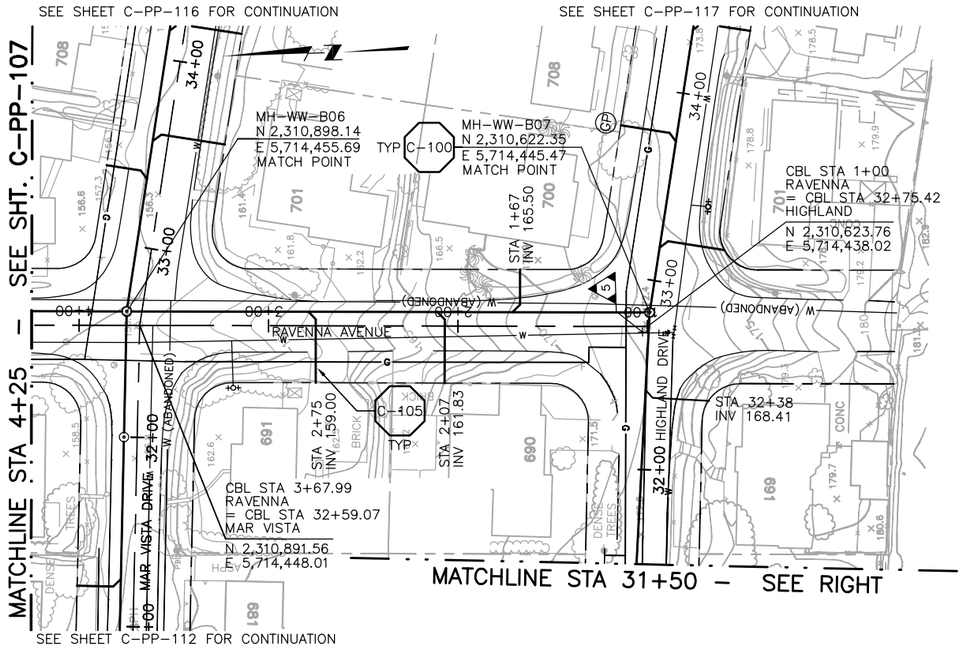

PLAN ON RAVENNA AVENUE AND HIGHLAND DRIVE

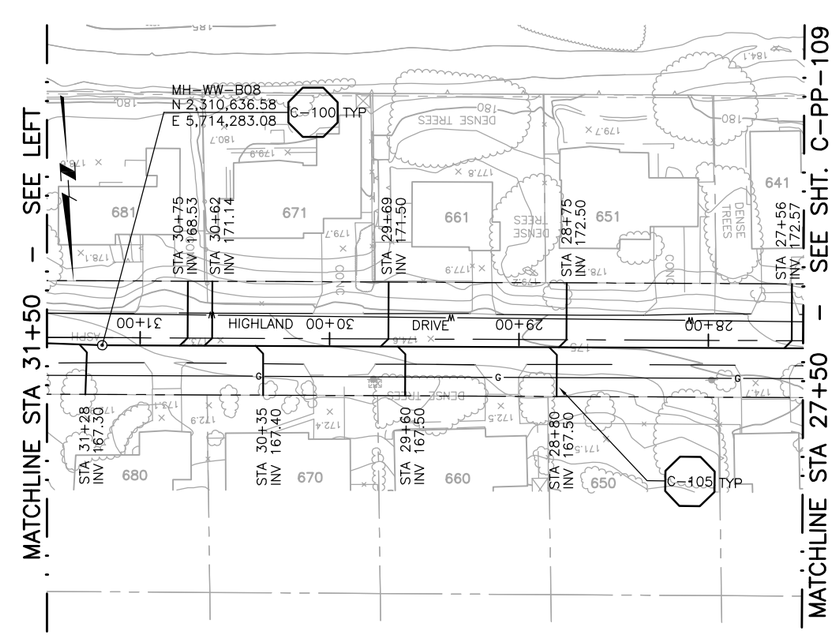

PLAN ON HIGHLAND DRIVE

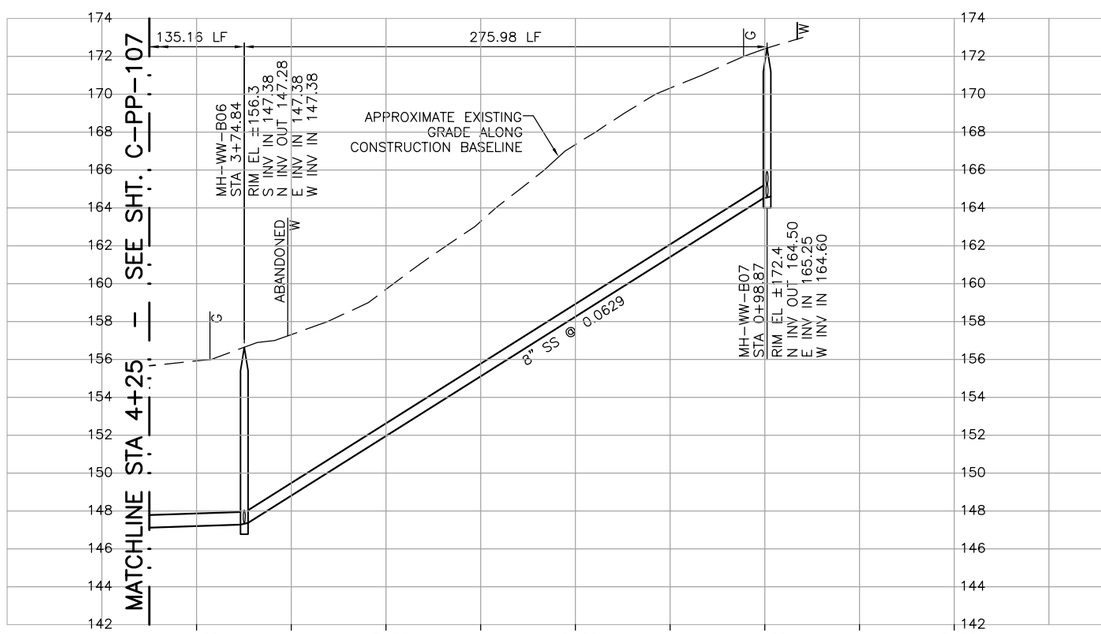

PROFILE ON RAVENNA AVENUE

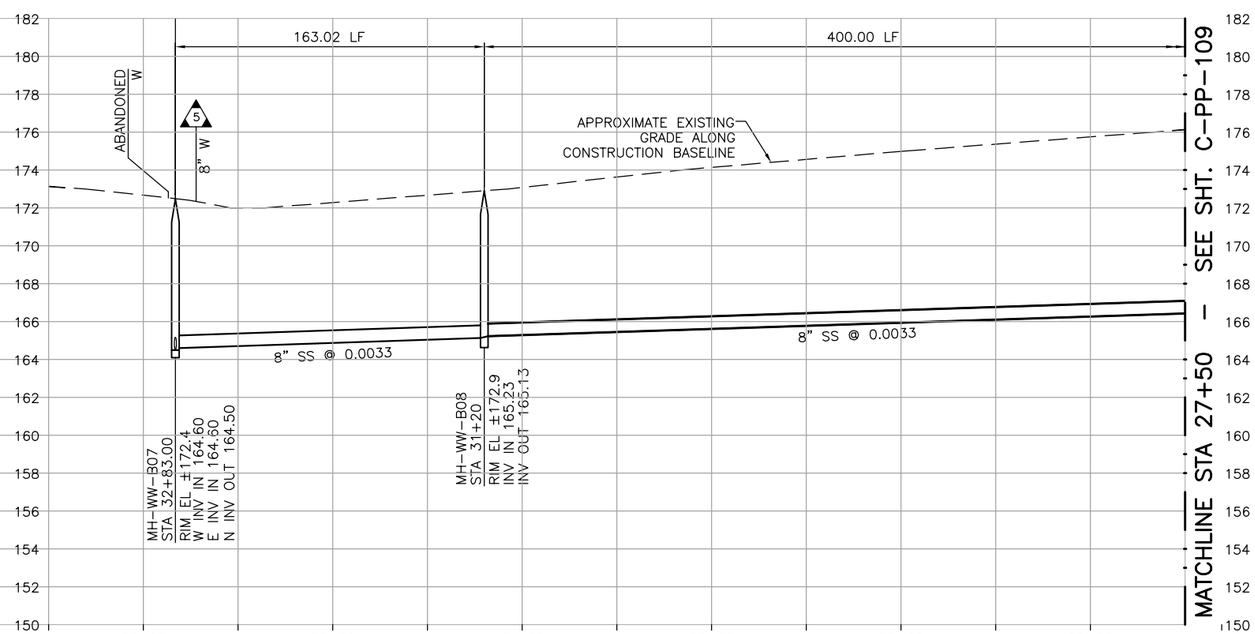

PROFILE ON HIGHLAND DRIVE

DIGALERT
DIAL TOLL FREE
1-800-642-2444
AT LEAST TWO DAYS BEFORE YOU DIG
UNDERGROUND SERVICE ALERT OF NORTHERN CALIFORNIA

REGISTERED PROFESSIONAL ENGINEER
MICHAEL H. MATSUMOTO
No. C42546
Exp. 3-31-04
CIVIL
STATE OF CALIFORNIA

REV	DATE	BY	DESCRIPTION

SCALE
HORZ: 1"=40'
VERT: 1"=4'

WARNING
0 1/2 1
IF THIS BAR DOES NOT MEASURE 1" THEN DRAWING IS NOT TO SCALE

DESIGNED MDT/MHM
DRAWN JCM
CHECKED GEH

SUBMITTED BY
JOHN A. BERGEN — C31069 LICENSE NO. — 2-16-2004 DATE
STEVEN J. HYLAND — C23892 LICENSE NO. — 2-16-2004 DATE

LOS OSOS
COMMUNITY SERVICES DISTRICT

MWH
Walnut Creek, California

RMC
Raines, Melton & Carella, Inc.

LOS OSOS WASTEWATER PROJECT
PLAN AND PROFILE
RAVENNA AVE – 4+25 TO 0+98.87
HIGHLAND DRIVE – 32+83 TO 27+50

SHEET
C-PP-108

C:\Program Files\ACAD2000\CADRMC\ALOSOSOS\C-PP-108.dwg, Layout1, Feb 04, 2004 10:24pm, John

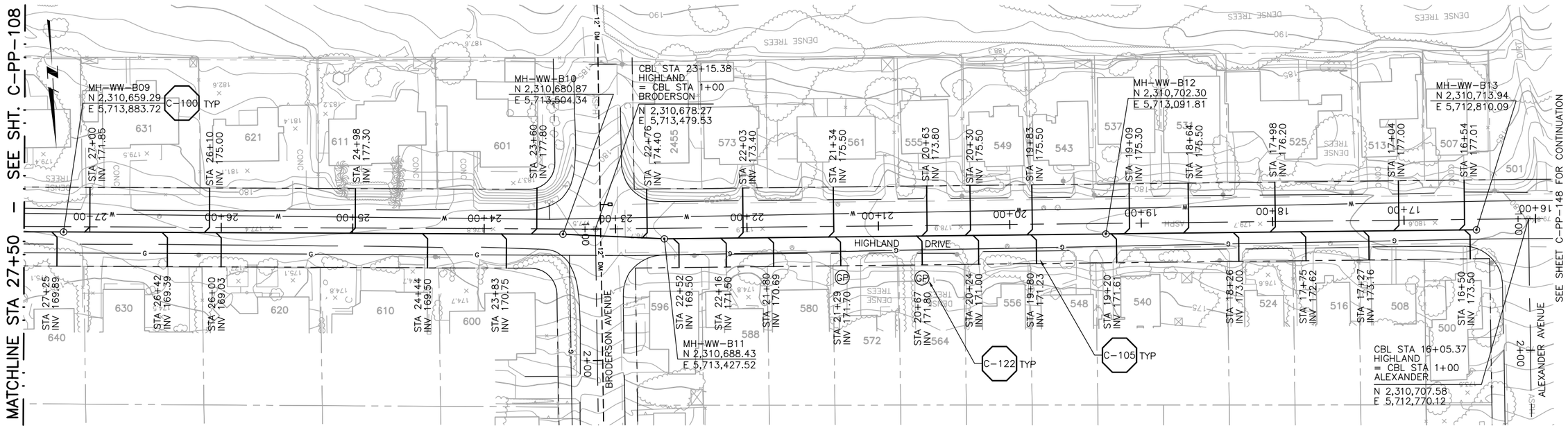

PLAN ON HIGHLAND DRIVE

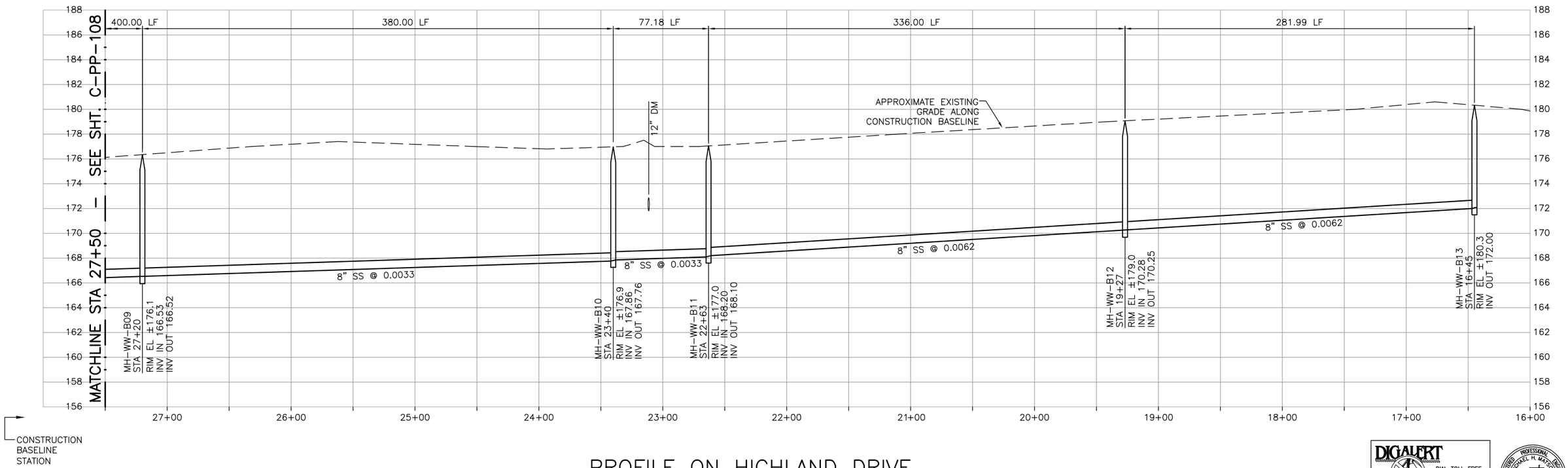

PROFILE ON HIGHLAND DRIVE

DIGALERT
DIAL TOLL FREE
1-800-642-2444
AT LEAST TWO DAYS BEFORE YOU DIG
UNDERGROUND SERVICE ALERT OF NORTHERN CALIFORNIA

REGISTERED PROFESSIONAL ENGINEER MICHAEL H. MATHEWS No. C42546 Exp. 3-31-04 CIVIL STATE OF CALIFORNIA

REV	DATE	BY	DESCRIPTION

SCALE
HORZ: 1"=40'
VERT: 1"=4'

WARNING
0 1/2 1
IF THIS BAR DOES NOT MEASURE 1" THEN DRAWING IS NOT TO SCALE

DESIGNED MDT/MHM
DRAWN JCM
CHECKED GEH

SUBMITTED BY
JOHN A. BERGEN — C31069 LICENSE NO. — 2-16-2004 DATE
STEVEN J. HYLAND — C23892 LICENSE NO. — 2-16-2004 DATE

LOS OSOS
COMMUNITY SERVICES DISTRICT

MWH
Walnut Creek, California

RMC
Raines, Melton & Carella, Inc.

LOS OSOS WASTEWATER PROJECT
PLAN AND PROFILE
HIGHLAND DRIVE
STA 27+50 TO STA 16+45

SHEET
C-PP-109

C:\Program Files\ACAD2000\CADRMC\ALOSOS05\C-PP-109.dwg, Layout1, Feb 04, 2004 10:36pm, John

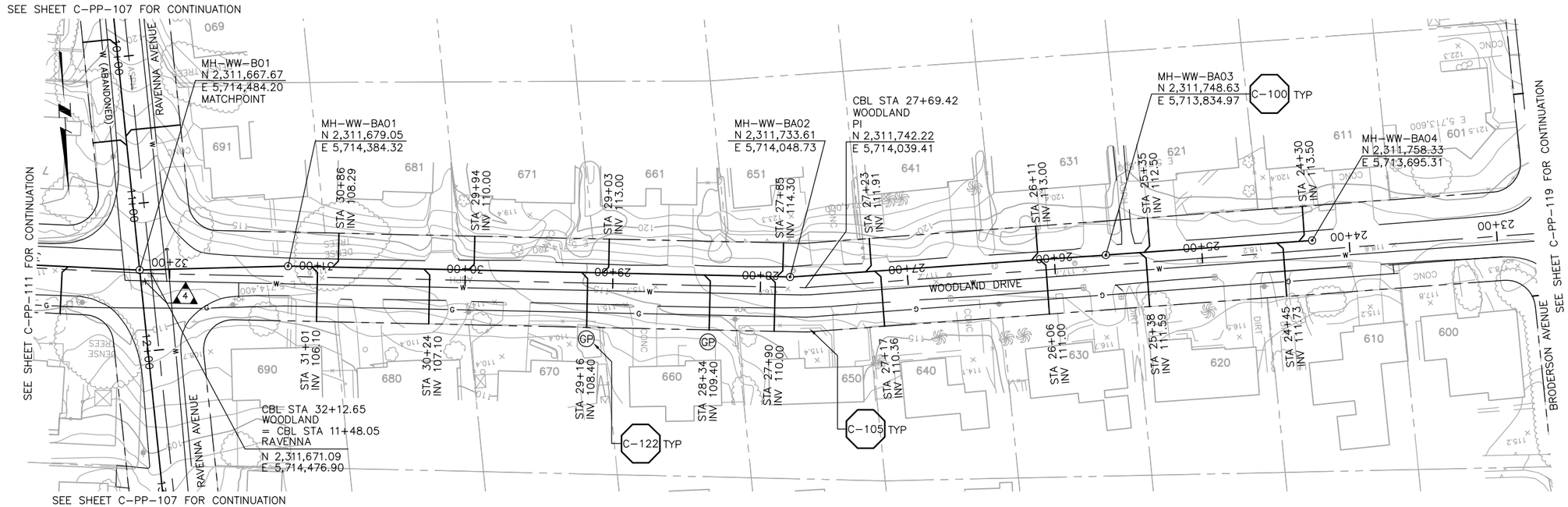

PLAN ON WOODLAND DRIVE

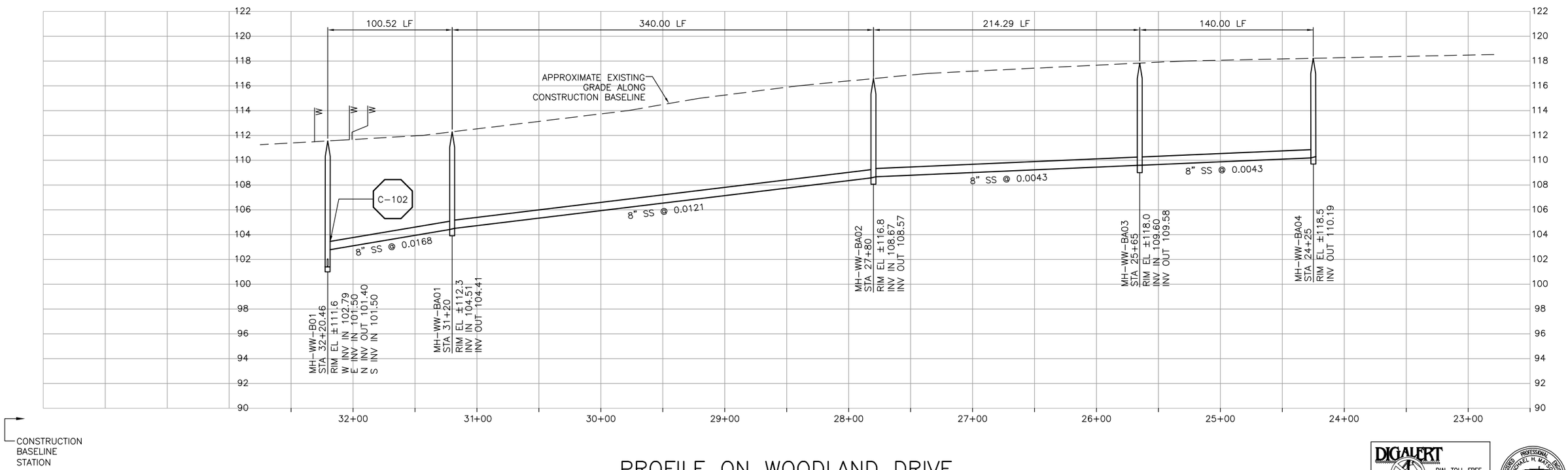

PROFILE ON WOODLAND DRIVE

DIGALERT
DIAL TOLL FREE
1-800-642-2444
AT LEAST TWO DAYS BEFORE YOU DIG
UNDERGROUND SERVICE ALERT OF NORTHERN CALIFORNIA

REGISTERED PROFESSIONAL ENGINEER
MICHAEL H. MARTIN
No. C42546
Exp. 3-31-04
CIVIL
STATE OF CALIFORNIA

REV	DATE	BY	DESCRIPTION

SCALE
HORZ: 1"=40'
VERT: 1"=4'

WARNING
0 1/2 1
IF THIS BAR DOES NOT MEASURE 1" THEN DRAWING IS NOT TO SCALE

DESIGNED MDT/MHM
DRAWN JCM
CHECKED GEH

SUBMITTED BY
JOHN A. BERGEN — C31069 LICENSE NO. — 2-16-2004 DATE
STEVEN J. HYLAND — C23892 LICENSE NO. — 2-16-2004 DATE

LOS OSOS
COMMUNITY SERVICES DISTRICT

MWH
Walnut Creek, California

RMC
Raines, Melton & Carella, Inc.

LOS OSOS WASTEWATER PROJECT
PLAN AND PROFILE
WOODLAND DRIVE
STA 32+20.46 TO STA 24+25

SHEET
C-PP-110

C:\Program Files\ACAD2000\CADRMC\ALOSOSOS\C-PP-110.dwg, Layout1, Feb 04, 2004 10:37pm, John

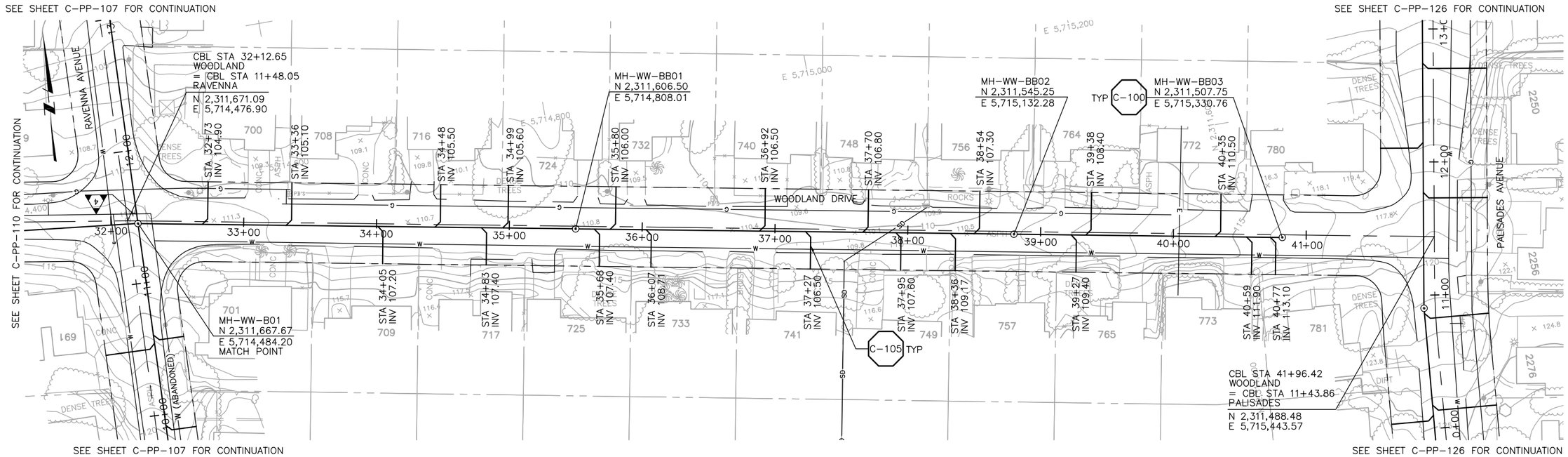

PLAN ON WOODLAND DRIVE

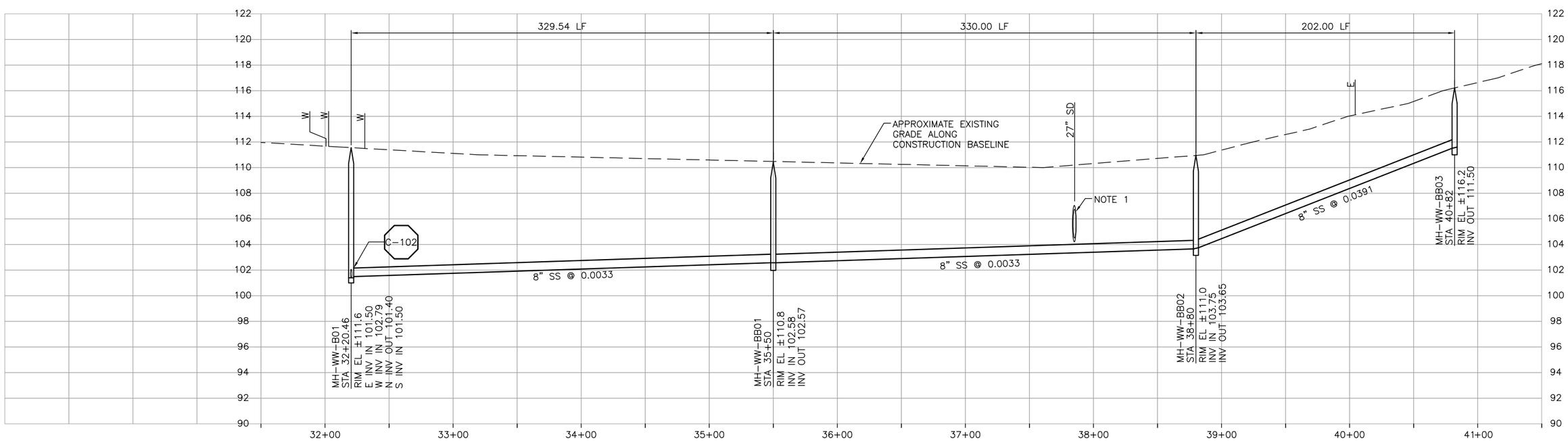

CONSTRUCTION BASELINE STATION

NOTES:
1. CONTRACTOR SHALL POTHOLE EXISTING SD TO VERIFY LOCATION AND DEPTH PRIOR TO BEGINNING WORK.

PROFILE ON WOODLAND DRIVE

DIGALERT
DIAL TOLL FREE
1-800-642-2444
AT LEAST TWO DAYS BEFORE YOU DIG
UNDERGROUND SERVICE ALERT OF NORTHERN CALIFORNIA

REGISTERED PROFESSIONAL ENGINEER
No. C42546
Exp. 3-31-04
CIVIL
STATE OF CALIFORNIA

REV	DATE	BY	DESCRIPTION

SCALE
HORZ: 1"=40'
VERT: 1"=4'

WARNING
0 1/2 1
IF THIS BAR DOES NOT MEASURE 1" THEN DRAWING IS NOT TO SCALE

DESIGNED MDT/MHM
DRAWN JCM
CHECKED GEH

SUBMITTED BY
JOHN A. BERGEN — C31069 LICENSE NO. — 2-16-2004 DATE
STEVEN J. HYLAND — C23892 LICENSE NO. — 2-16-2004 DATE

LOS OSOS
COMMUNITY SERVICES DISTRICT

MWH
Walnut Creek, California

RMC
Raines, Melton & Carella, Inc.

LOS OSOS WASTEWATER PROJECT
PLAN AND PROFILE
WOODLAND DRIVE
STA 32+20.46 TO STA 40+82

SHEET
C-PP-111

C:\Program Files\ACAD2000\CADRMC\ALOSOSOS\C-PP-111.dwg, Layout1, Feb 04, 2004 10:39pm, John

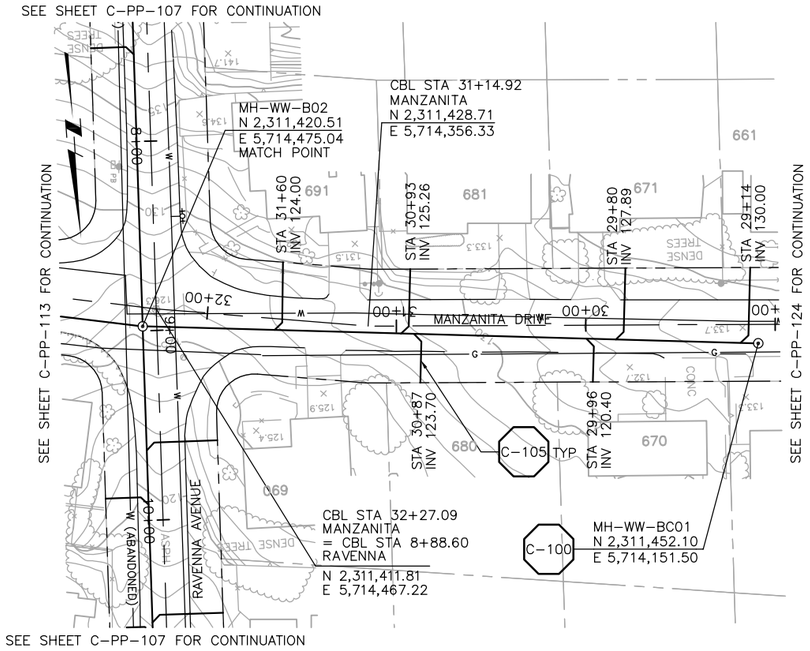

PLAN ON MANZANITA DRIVE

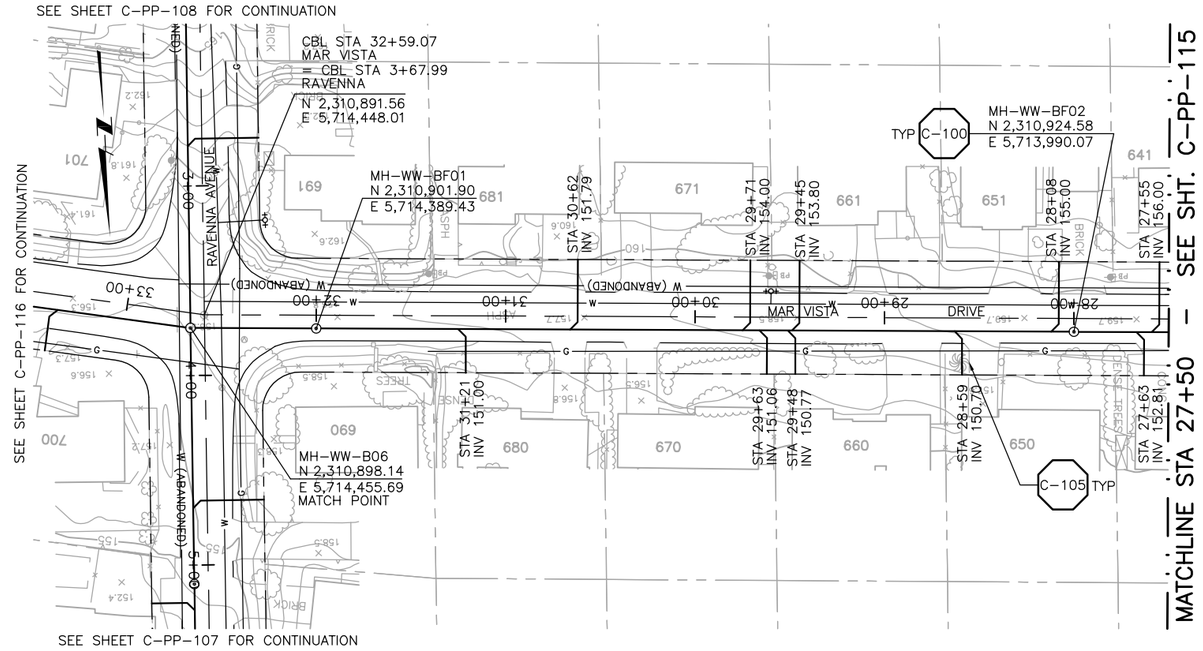

PLAN ON MAR VISTA DRIVE

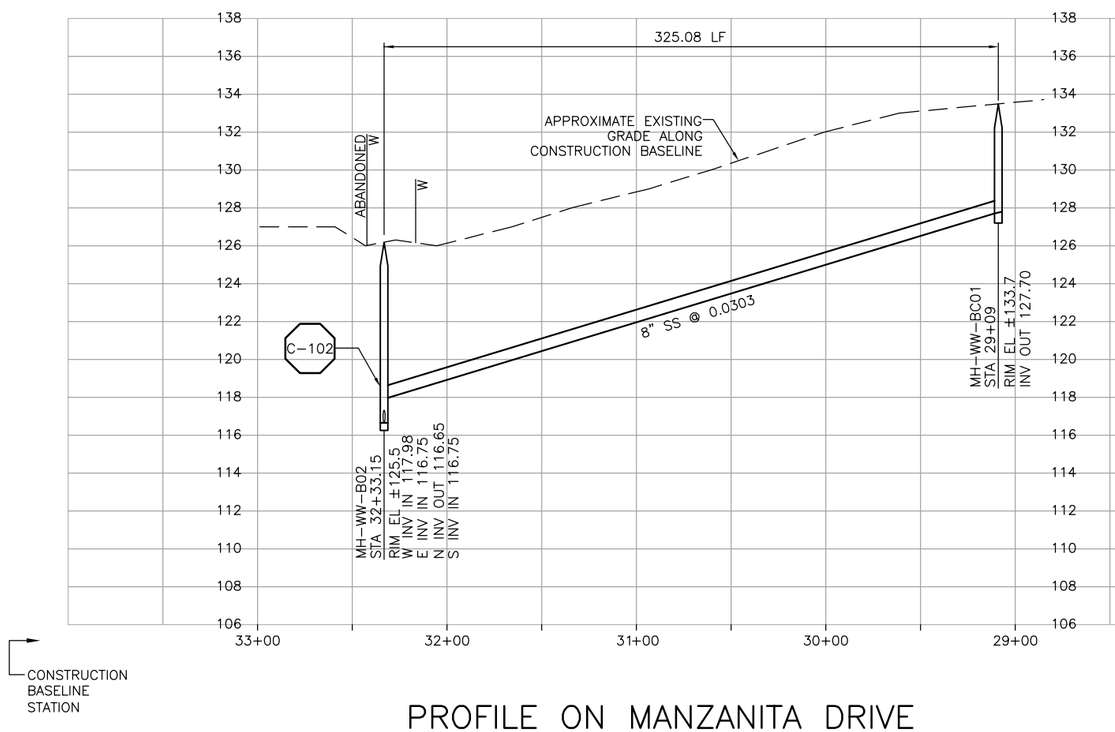

PROFILE ON MANZANITA DRIVE

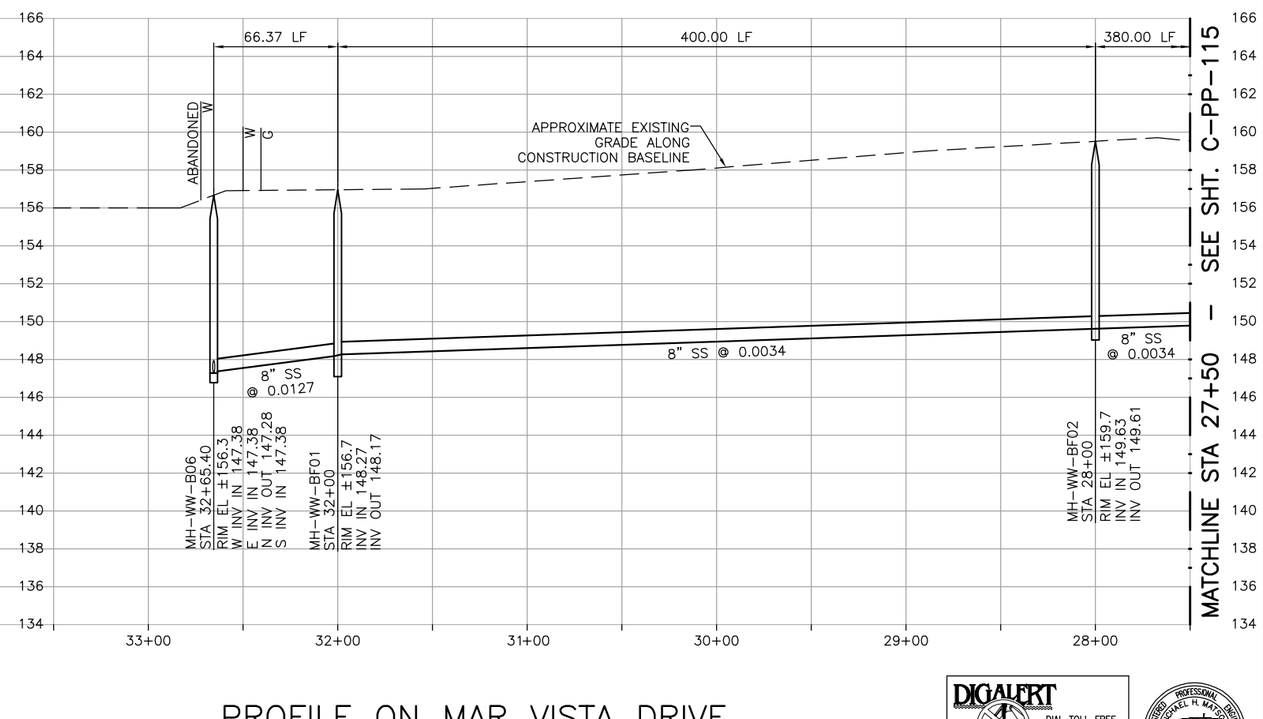

PROFILE ON MAR VISTA DRIVE

DIGALERT
DIAL TOLL FREE
1-800-642-2444
AT LEAST TWO DAYS BEFORE YOU DIG
UNDERGROUND SERVICE ALERT OF NORTHERN CALIFORNIA

REGISTERED PROFESSIONAL ENGINEER MICHAEL H. MATTHEWS No. C42546 Exp. 3-31-04 CIVIL STATE OF CALIFORNIA

REV	DATE	BY	DESCRIPTION

SCALE: HORZ: 1"=40' VERT: 1"=4'

WARNING: 0 1/2 1 — IF THIS BAR DOES NOT MEASURE 1" THEN DRAWING IS NOT TO SCALE

DESIGNED MDT/MHM
DRAWN JCM
CHECKED GEH

SUBMITTED BY
JOHN A. BERGEN — C31069 LICENSE NO. — 2-16-2004 DATE
STEVEN J. HYLAND — C23892 LICENSE NO. — 2-16-2004 DATE

LOS OSOS COMMUNITY SERVICES DISTRICT

MWH Walnut Creek, California

RMC Raines, Melton & Carella, Inc.

LOS OSOS WASTEWATER PROJECT
PLAN AND PROFILE
MANZANITA DR – 32+33.15 TO 29+09
MAR VISTA DR – 32+65.40 TO 27+50

SHEET C-PP-112

C:\Program Files\ACAD2000\CADRMC\ALOSOSOS\C-PP-112.dwg, Layout1, Feb 04, 2004 10:40pm, John

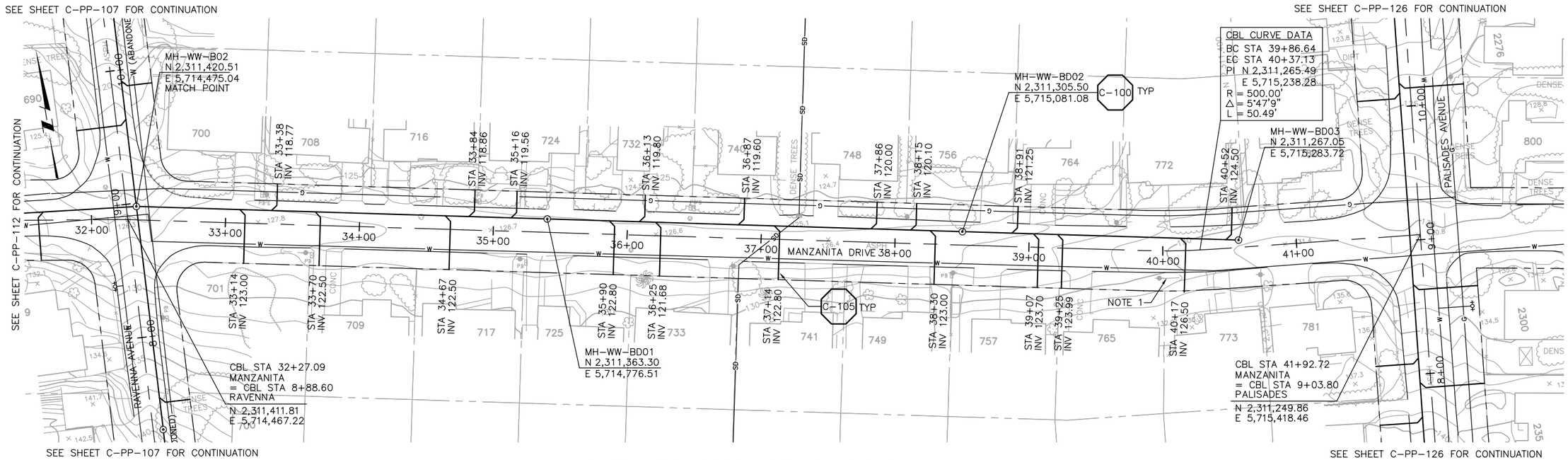

PLAN ON MANZANITA DRIVE

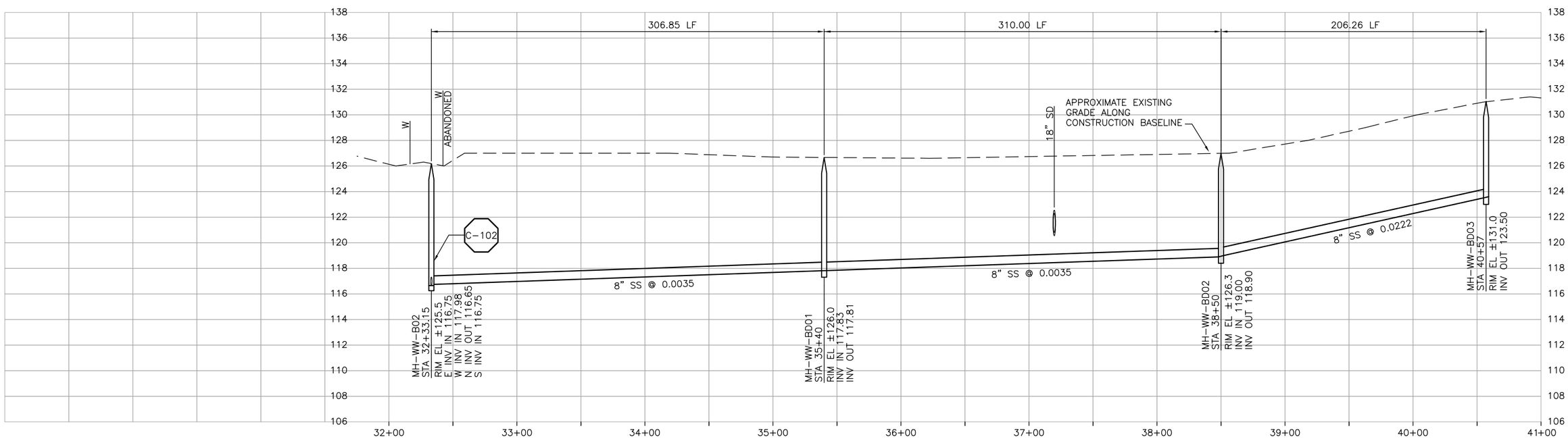

CONSTRUCTION BASELINE STATION

NOTES:

1. CONTRACTOR SHALL TEMPORARILY RELOCATE GUY WIRE. CONTACT PG&E TO COORDINATE.

PROFILE ON MANZANITA DRIVE

DIGALERT
DIAL TOLL FREE
1-800-642-2444
AT LEAST TWO DAYS BEFORE YOU DIG
UNDERGROUND SERVICE ALERT OF NORTHERN CALIFORNIA

REGISTERED PROFESSIONAL ENGINEER
MICHAEL H. MARTIN
No. C42546
Exp. 3-31-04
CIVIL
STATE OF CALIFORNIA

REV	DATE	BY	DESCRIPTION

SCALE
HORZ: 1"=40'
VERT: 1"=4'

WARNING
0 1/2 1
IF THIS BAR DOES NOT MEASURE 1" THEN DRAWING IS NOT TO SCALE

DESIGNED MDT/MHM
DRAWN JCM
CHECKED GEH

SUBMITTED BY
JOHN A. BERGEN — C31069 — LICENSE NO. — 2-16-2004 — DATE
STEVEN J. HYLAND — C23892 — LICENSE NO. — 2-16-2004 — DATE

LOS OSOS
COMMUNITY SERVICES DISTRICT

MWH
Walnut Creek, California

RMC
Raines, Melton & Carella, Inc.

LOS OSOS WASTEWATER PROJECT
PLAN AND PROFILE
MANZANITA DRIVE
STA 32+33.15 TO STA 40+57

SHEET
C-PP-113

C:\Program Files\ACAD2000\CADRMC\ALOSOSOS\C-PP-113.dwg, Layout1, Feb 04, 2004 10:43pm, John

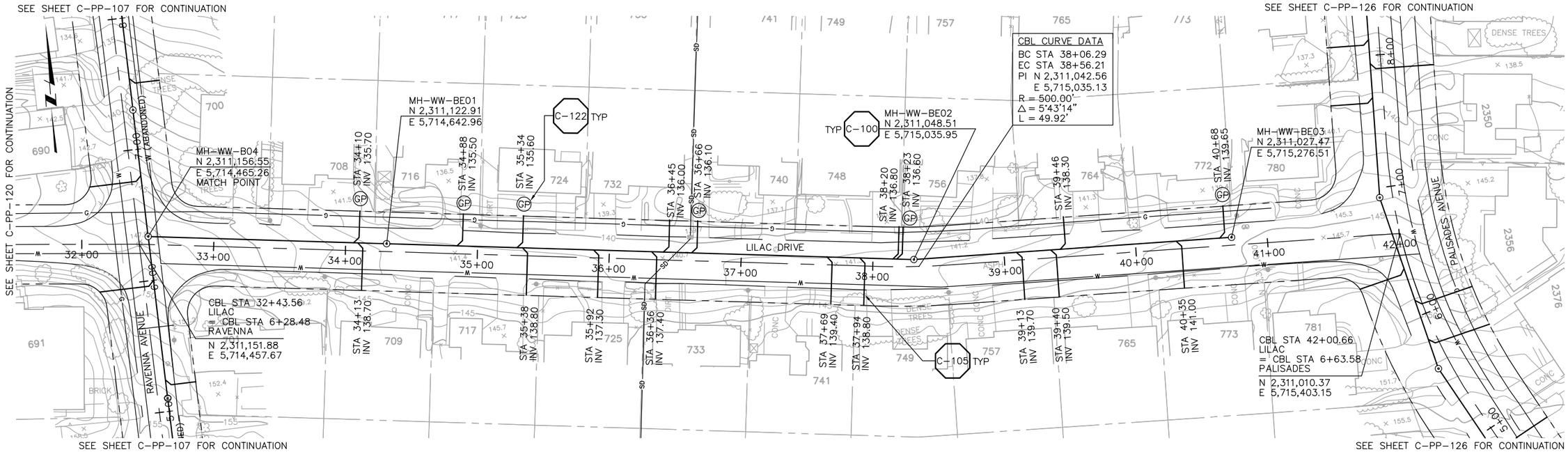

PLAN ON LILAC DRIVE

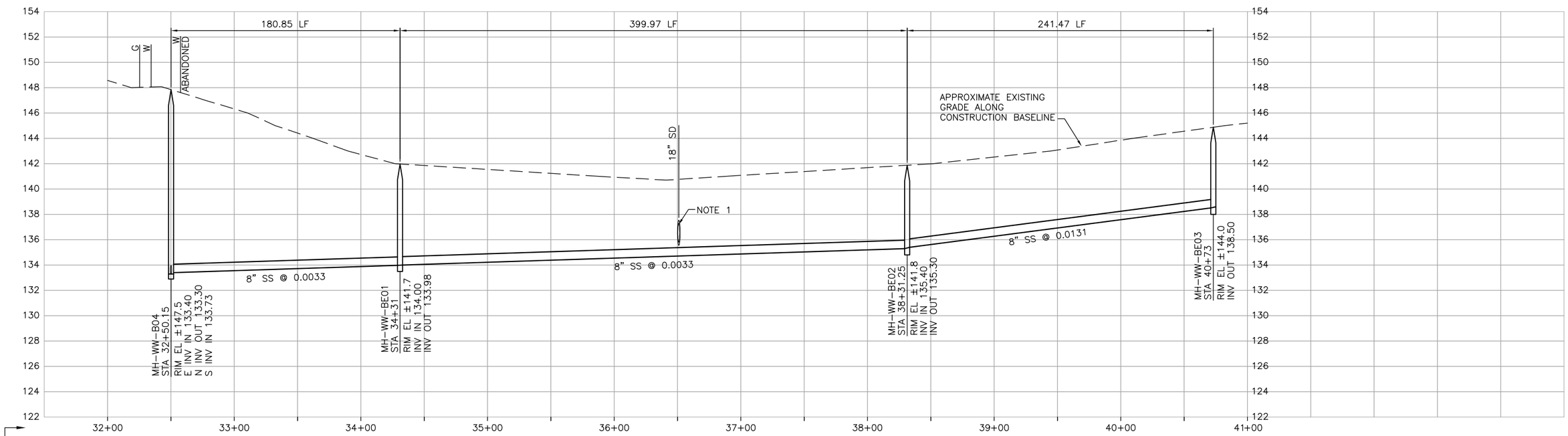

NOTES:
1. CONTRACTOR SHALL POTHOLE EXISTING SD TO VERIFY LOCATION AND DEPTH PRIOR TO BEGINNING WORK.

PROFILE ON LILAC DRIVE

DIGALERT
DIAL TOLL FREE
1-800-642-2444
AT LEAST TWO DAYS BEFORE YOU DIG
UNDERGROUND SERVICE ALERT OF NORTHERN CALIFORNIA

REGISTERED PROFESSIONAL ENGINEER
No. C42546
Exp. 3-31-04
CIVIL
STATE OF CALIFORNIA

REV	DATE	BY	DESCRIPTION

SCALE
HORZ: 1"=40'
VERT: 1"=4'

WARNING
0 1/2 1
IF THIS BAR DOES NOT MEASURE 1" THEN DRAWING IS NOT TO SCALE

DESIGNED MDT/MHM
DRAWN JCM
CHECKED GEH

SUBMITTED BY
JOHN A. BERGEN — C31069 LICENSE NO. — 2-16-2004 DATE
STEVEN J. HYLAND — C23892 LICENSE NO. — 2-16-2004 DATE

LOS OSOS
COMMUNITY SERVICES DISTRICT

MWH
Walnut Creek, California

RMC
Raines, Melton & Carella, Inc.

LOS OSOS WASTEWATER PROJECT
PLAN AND PROFILE
LILAC DRIVE
STA 32+50.15 TO STA 40+73

SHEET
C-PP-114

C:\Program Files\ACAD2000\CADRMC\ALOSOSOS\C-PP-114.dwg, Layout1, Feb 04, 2004 10:45pm, John

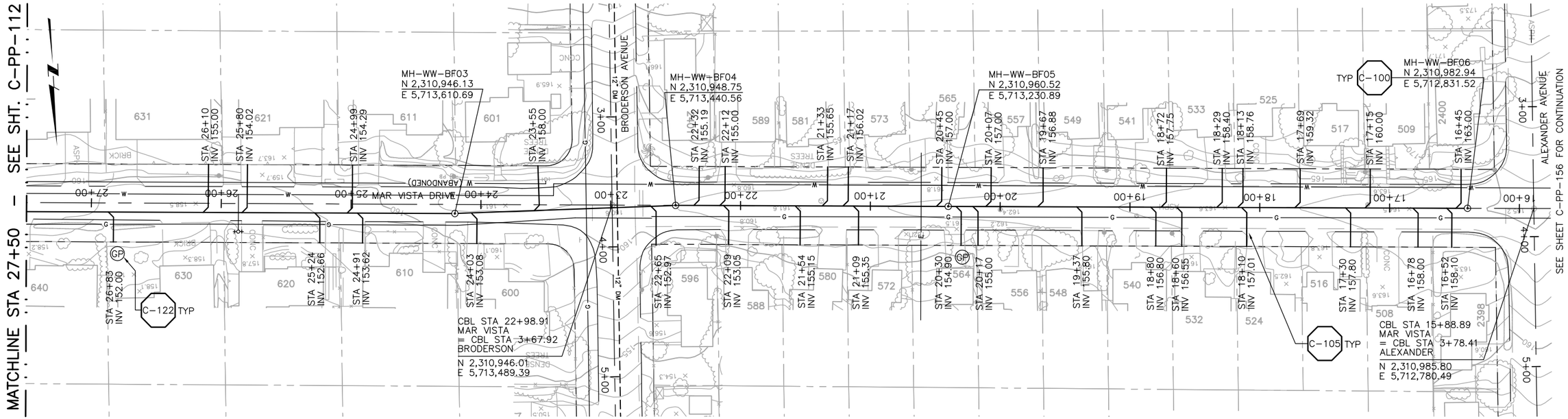

PLAN ON MAR VISTA DRIVE

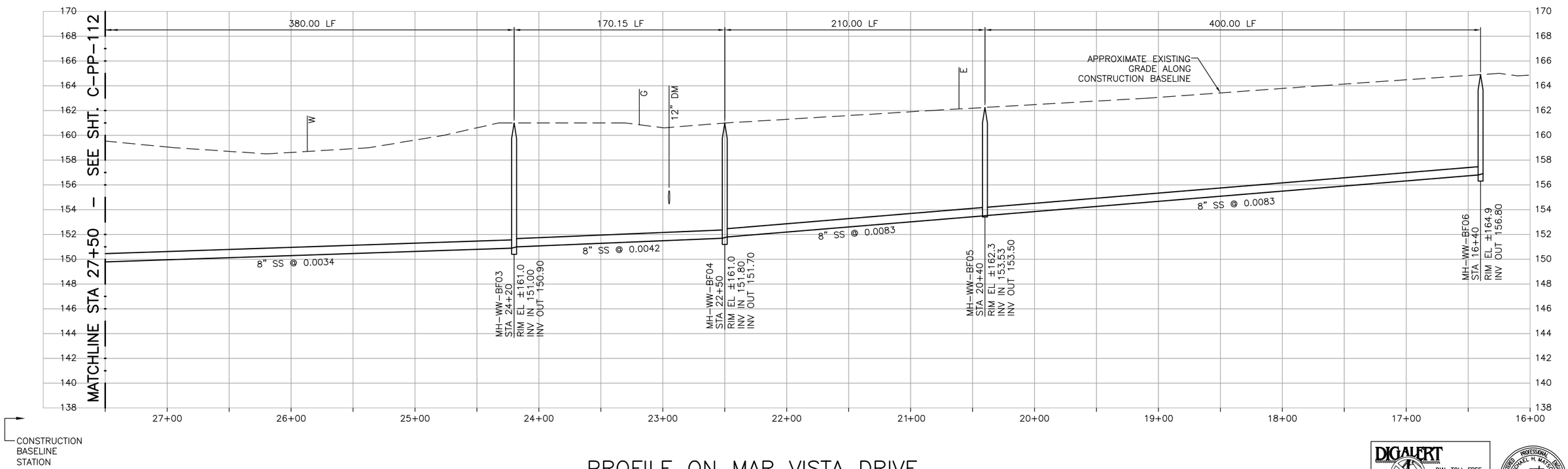

PROFILE ON MAR VISTA DRIVE

DIGALERT DIAL TOLL FREE 1-800-642-2444 AT LEAST TWO DAYS BEFORE YOU DIG UNDERGROUND SERVICE ALERT OF NORTHERN CALIFORNIA

REGISTERED PROFESSIONAL ENGINEER MICHAEL H. MAY No. C42546 Exp. 3-31-04 CIVIL STATE OF CALIFORNIA

REV	DATE	BY	DESCRIPTION

SCALE: HORZ: 1"=40' VERT: 1"=4'

WARNING: 0 1/2 1 — IF THIS BAR DOES NOT MEASURE 1" THEN DRAWING IS NOT TO SCALE

DESIGNED MDT/MHM
DRAWN JCM
CHECKED GEH

SUBMITTED BY
JOHN A. BERGEN — C31069 LICENSE NO. — 2-16-2004 DATE
STEVEN J. HYLAND — C23892 LICENSE NO. — 2-16-2004 DATE

LOS OSOS COMMUNITY SERVICES DISTRICT

MWH Walnut Creek, California

RMC Raines, Melton & Carella, Inc.

LOS OSOS WASTEWATER PROJECT
PLAN AND PROFILE
MAR VISTA DRIVE
STA 27+50 TO STA 16+40

SHEET C-PP-115

C:\Program Files\ACAD2000\CADRMC\LOSOSOS\C-PP-115.dwg, Layout1, Feb 04, 2004 10:46pm, John

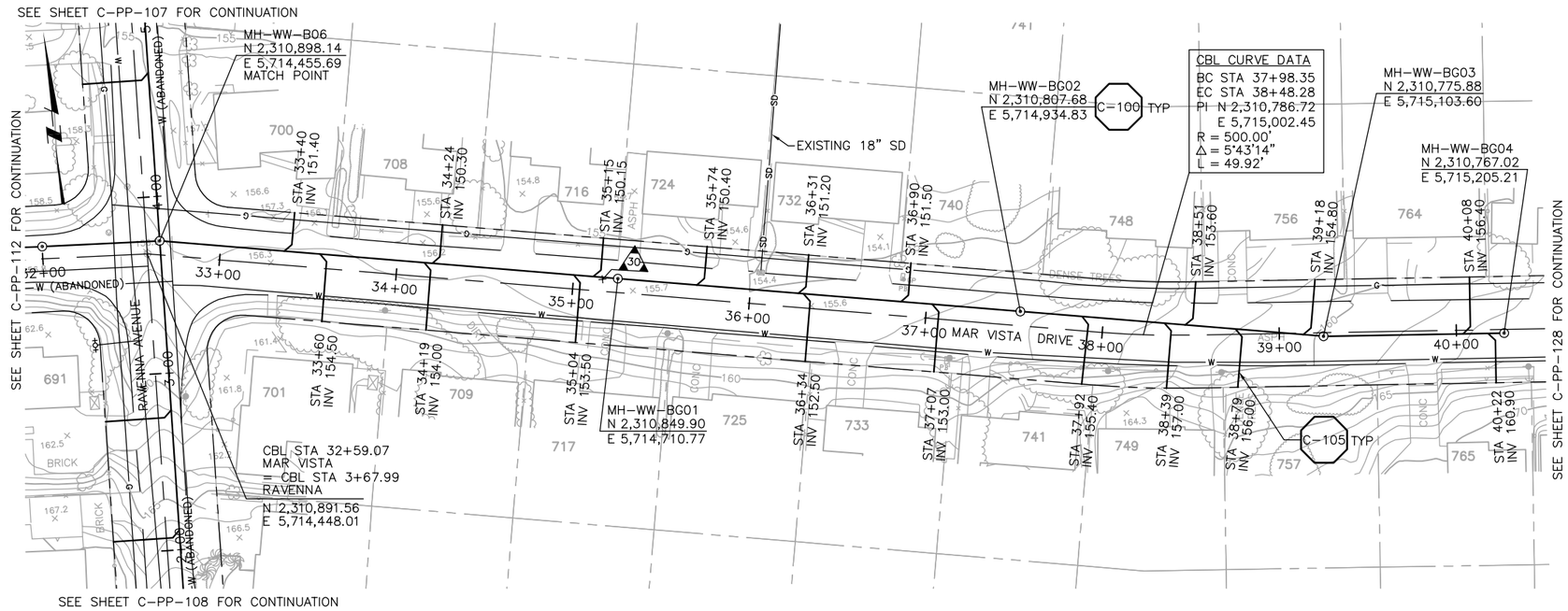

PLAN ON MAR VISTA DRIVE

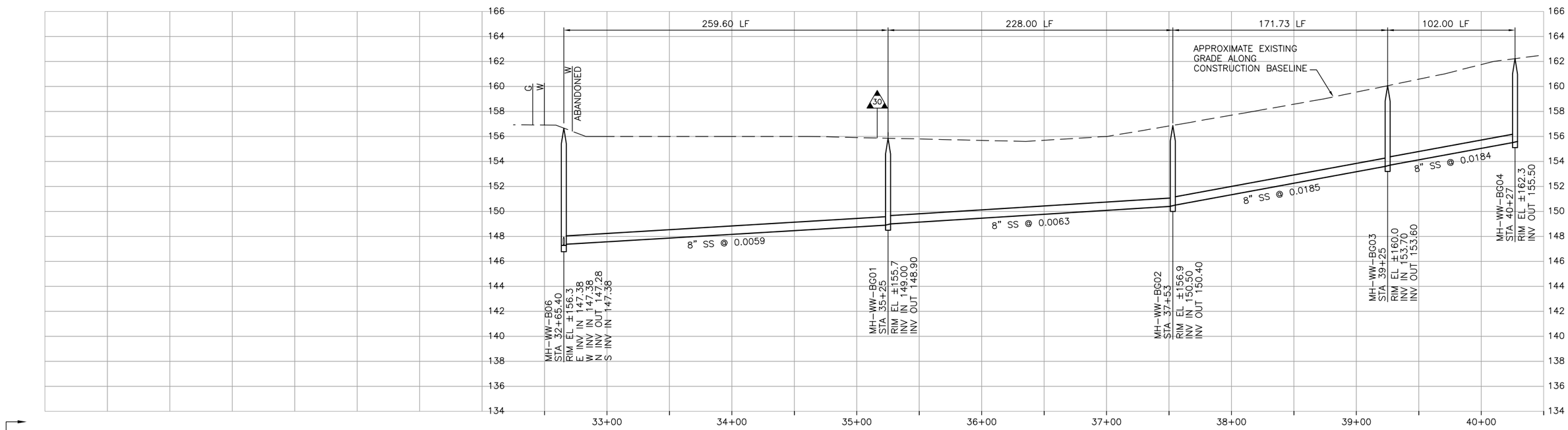

PROFILE ON MAR VISTA DRIVE

DIGALERT
DIAL TOLL FREE
1-800-642-2444
AT LEAST TWO DAYS BEFORE YOU DIG
UNDERGROUND SERVICE ALERT OF NORTHERN CALIFORNIA

REGISTERED PROFESSIONAL ENGINEER
No. C42546
Exp. 3-31-04
CIVIL
STATE OF CALIFORNIA

REV	DATE	BY	DESCRIPTION

SCALE
HORZ: 1"=40'
VERT: 1"=4'

WARNING
0 1/2 1
IF THIS BAR DOES NOT MEASURE 1" THEN DRAWING IS NOT TO SCALE

DESIGNED MDT/MHM
DRAWN JCM
CHECKED GEH

SUBMITTED BY
JOHN A. BERGEN — C31069 LICENSE NO. — 2-16-2004 DATE
STEVEN J. HYLAND — C23892 LICENSE NO. — 2-16-2004 DATE

LOS OSOS
COMMUNITY SERVICES DISTRICT

MWH
Walnut Creek, California

RMC
Raines, Melton & Carella, Inc.

LOS OSOS WASTEWATER PROJECT
PLAN AND PROFILE
MAR VISTA DRIVE
STA 32+65.40 TO STA 40+27

SHEET
C-PP-116

C:\Program Files\ACAD2000\CADRMC\ALOSOSOS\C-PP-116.dwg, Layout1, Feb 04, 2004 10:47pm, John

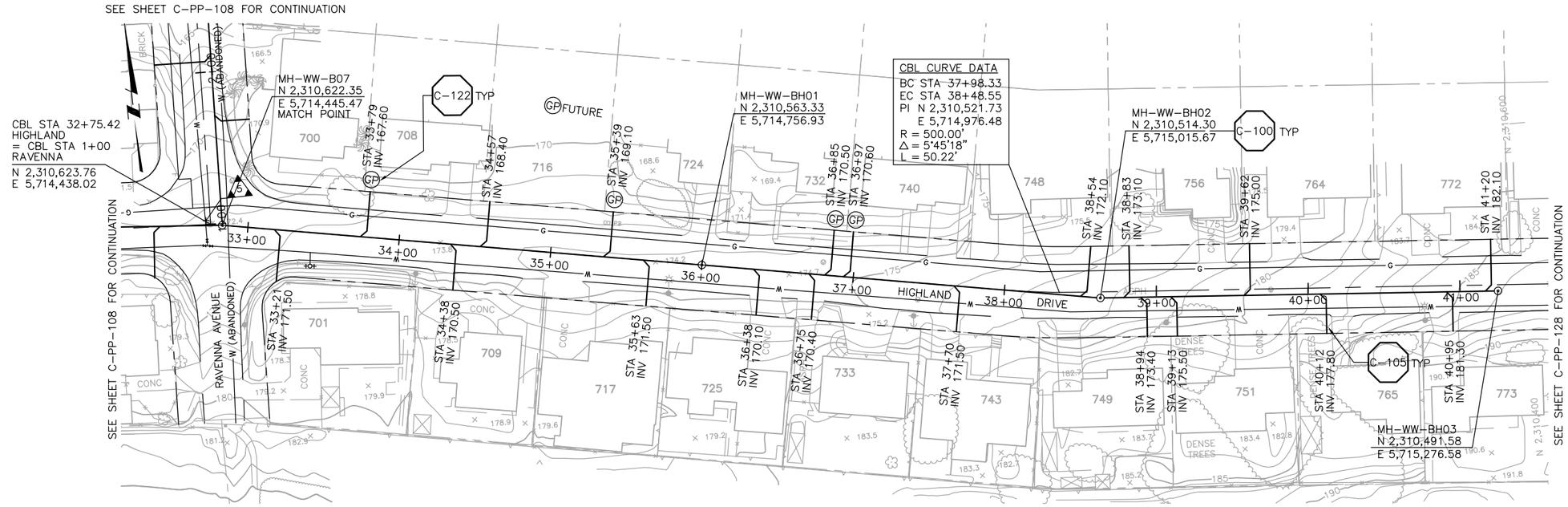

PLAN ON HIGHLAND DRIVE

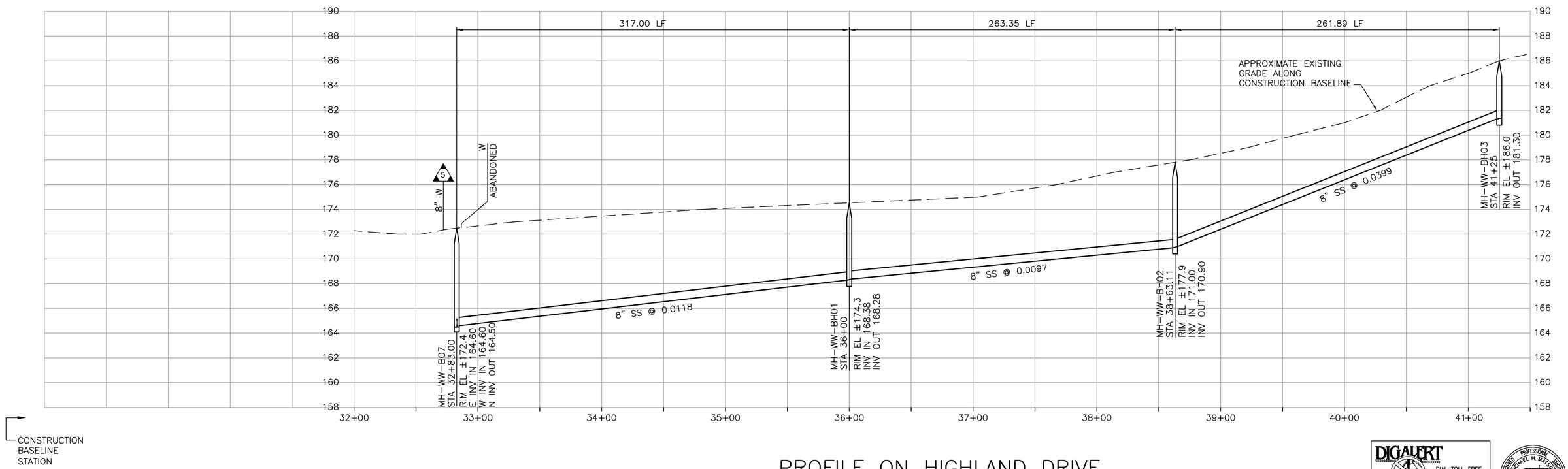

PROFILE ON HIGHLAND DRIVE

DIGALERT
DIAL TOLL FREE
1-800-642-2444
AT LEAST TWO DAYS BEFORE YOU DIG
UNDERGROUND SERVICE ALERT OF NORTHERN CALIFORNIA

REGISTERED PROFESSIONAL ENGINEER
No. C42546
Exp. 3-31-04
CIVIL
STATE OF CALIFORNIA

REV	DATE	BY	DESCRIPTION

SCALE
HORZ: 1"=40'
VERT: 1"=4'

WARNING
0 1/2 1
IF THIS BAR DOES NOT MEASURE 1" THEN DRAWING IS NOT TO SCALE

DESIGNED MDT/MHM
DRAWN JCM
CHECKED GEH

SUBMITTED BY
JOHN A. BERGEN — C31069 LICENSE NO. — 2-16-2004 DATE
STEVEN J. HYLAND — C23892 LICENSE NO. — 2-16-2004 DATE

LOS OSOS
COMMUNITY SERVICES DISTRICT

MWH
Walnut Creek, California

RMC
Raines, Melton & Carella, Inc.

LOS OSOS WASTEWATER PROJECT
PLAN AND PROFILE
HIGHLAND DRIVE
STA 32+83 TO STA 41+25

SHEET
C-PP-117

C:\Program Files\ACAD2000\CADRMC\ALOSOSOS\C-PP-117.dwg, Layout1, Feb 05, 2004 1:43pm, John

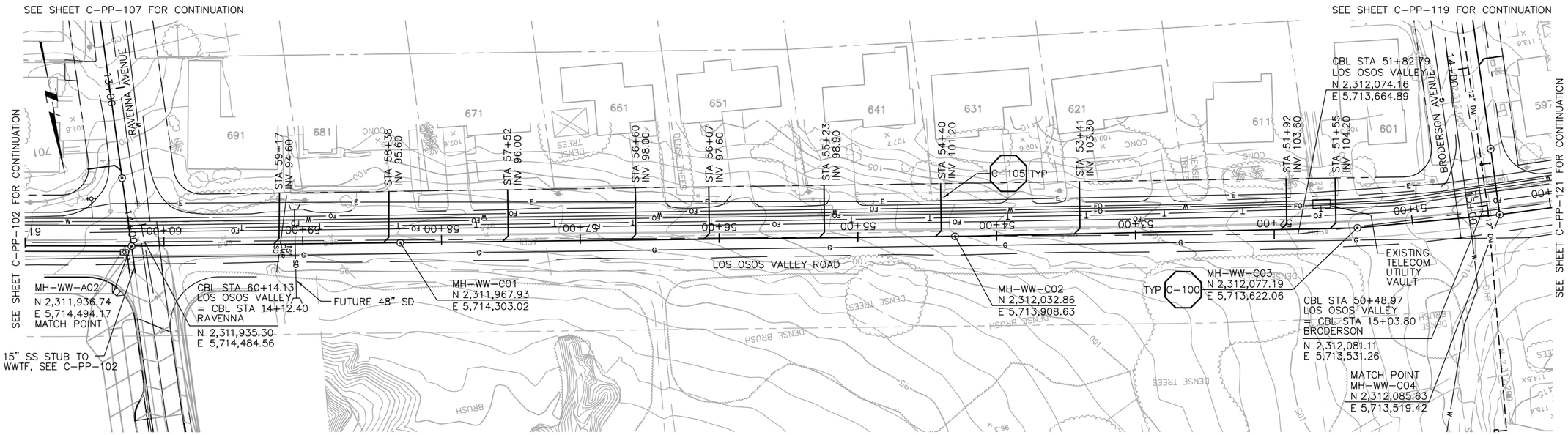

PLAN ON LOS OSOS VALLEY ROAD

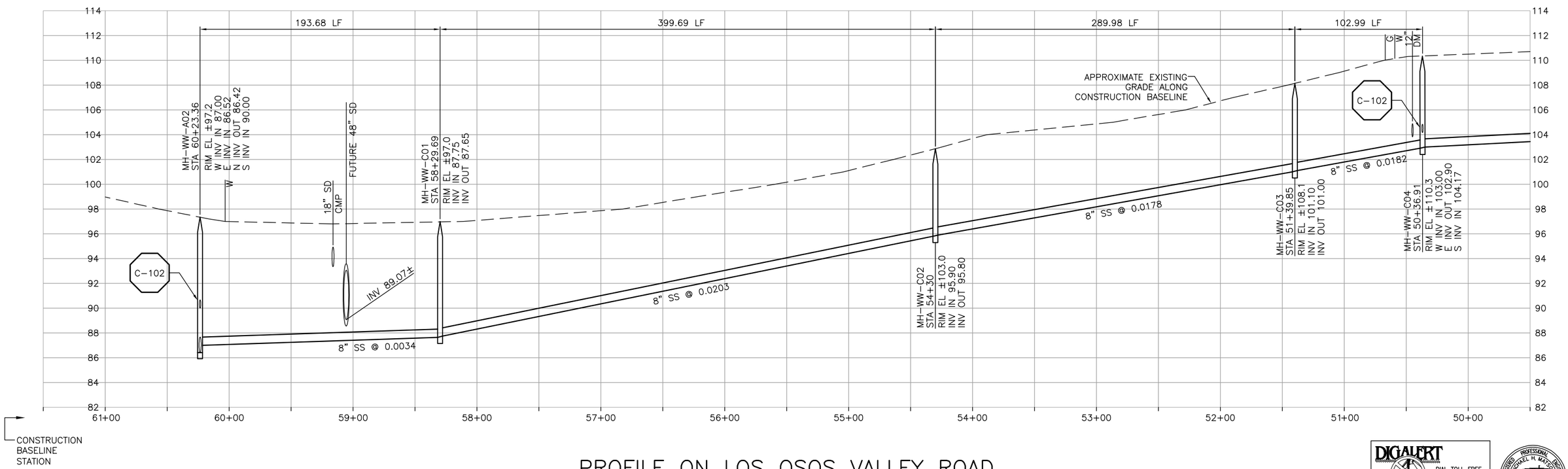

PROFILE ON LOS OSOS VALLEY ROAD

DIGALERT
DIAL TOLL FREE
1-800-642-2444
AT LEAST TWO DAYS BEFORE YOU DIG
UNDERGROUND SERVICE ALERT OF NORTHERN CALIFORNIA

REGISTERED PROFESSIONAL ENGINEER
No. C42546
Exp. 3-31-04
CIVIL
STATE OF CALIFORNIA

REV	DATE	BY	DESCRIPTION

SCALE
HORZ: 1"=40'
VERT: 1"=4'

WARNING
0 1/2 1
IF THIS BAR DOES NOT MEASURE 1" THEN DRAWING IS NOT TO SCALE

DESIGNED MDT/MHM
DRAWN JCM
CHECKED GEH

SUBMITTED BY
JOHN A. BERGEN — C31069 LICENSE NO. — 2-16-2004 DATE
STEVEN J. HYLAND — C23892 LICENSE NO. — 2-16-2004 DATE

LOS OSOS
COMMUNITY SERVICES DISTRICT

MWH
Walnut Creek, California

RMC
Raines, Melton & Carella, Inc.

LOS OSOS WASTEWATER PROJECT
PLAN AND PROFILE
LOS OSOS VALLEY ROAD
STA 60+23.36 TO STA 50+36.91

SHEET
C-PP-118

C:\Program Files\ACAD2000\CADRMC\ALOSOSOS\C-PP-118.dwg, Layout1, Feb 04, 2004 10:49pm, John

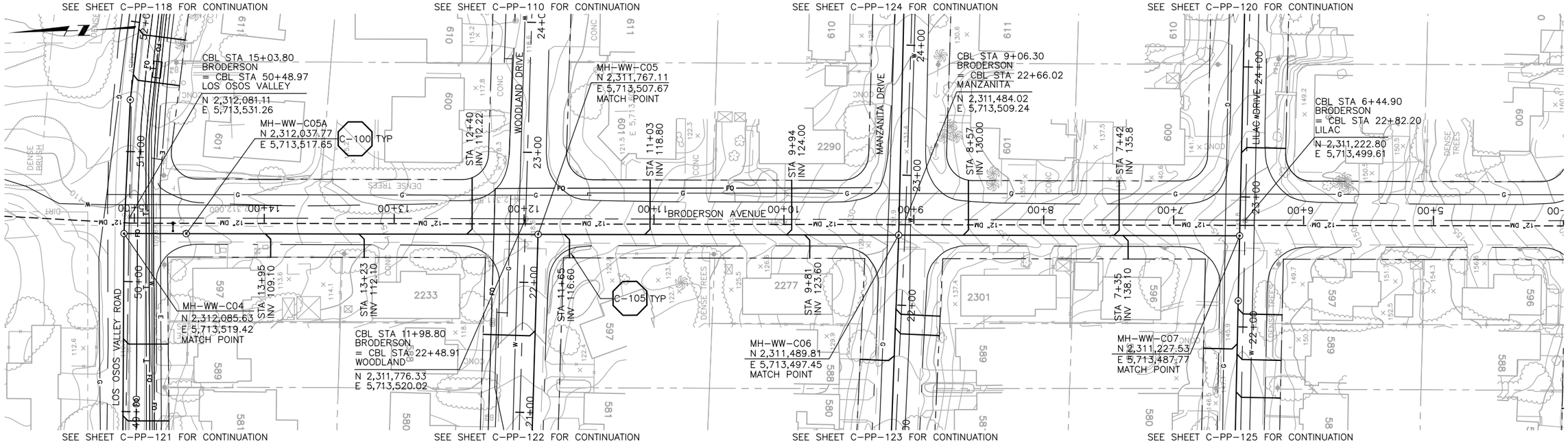

PLAN ON BRODERSON AVENUE

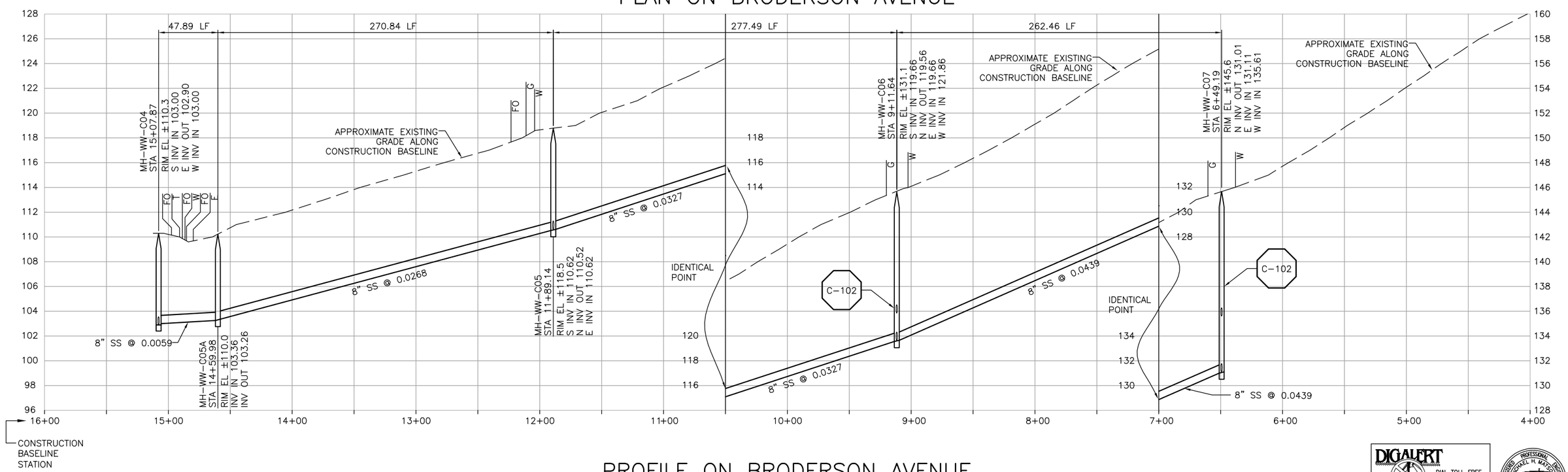

PROFILE ON BRODERSON AVENUE

DIGALERT DIAL TOLL FREE 1-800-642-2444 AT LEAST TWO DAYS BEFORE YOU DIG UNDERGROUND SERVICE ALERT OF NORTHERN CALIFORNIA

REGISTERED PROFESSIONAL ENGINEER MICHAEL H. MAY No. C42546 Exp. 3-31-04 CIVIL STATE OF CALIFORNIA

REV	DATE	BY	DESCRIPTION

SCALE: HORZ: 1"=40' VERT: 1"=4'

WARNING: 0 1/2 1 — IF THIS BAR DOES NOT MEASURE 1" THEN DRAWING IS NOT TO SCALE

DESIGNED MDT/MHM
DRAWN JCM
CHECKED GEH

SUBMITTED BY
JOHN A. BERGEN — C31069 LICENSE NO. — 2-16-2004 DATE
STEVEN J. HYLAND — C23892 LICENSE NO. — 2-16-2004 DATE

LOS OSOS COMMUNITY SERVICES DISTRICT

MWH Walnut Creek, California

RMC Raines, Melton & Carella, Inc.

LOS OSOS WASTEWATER PROJECT
PLAN AND PROFILE
BRODERSON AVENUE
STA 15+07.87 TO STA 6+49.19

SHEET C-PP-119

C:\Program Files\ACAD2000\CADRMC\LOSOSOS\C-PP-119.dwg, Layout1, Feb 04, 2004 10:56pm, John

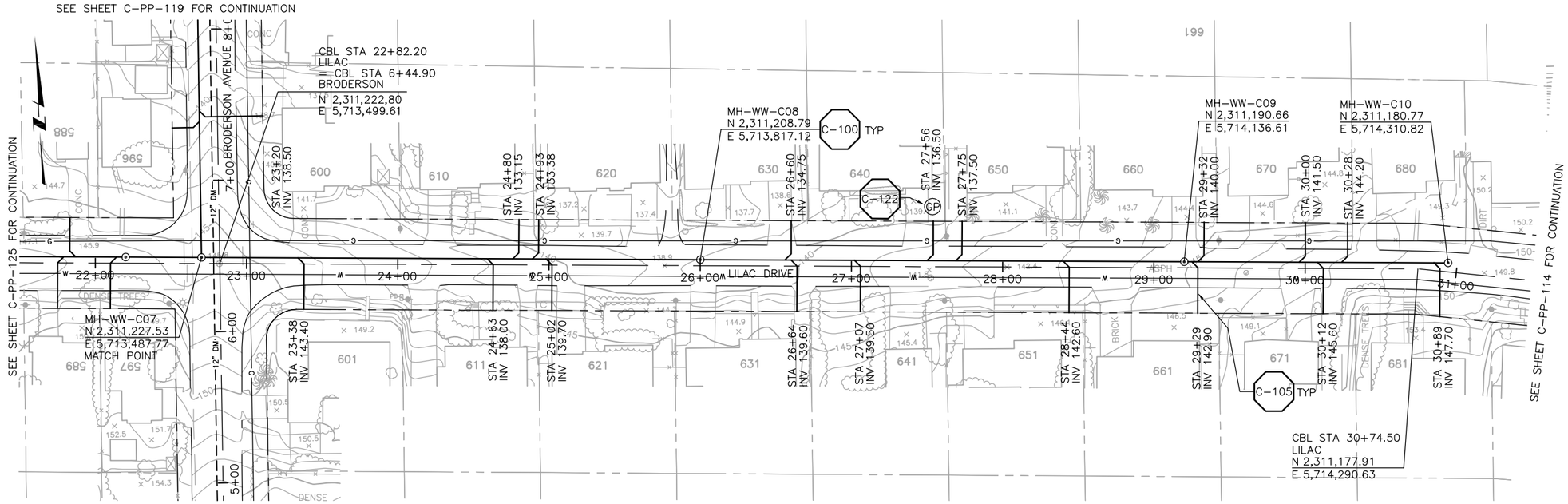

PLAN ON LILAC DRIVE

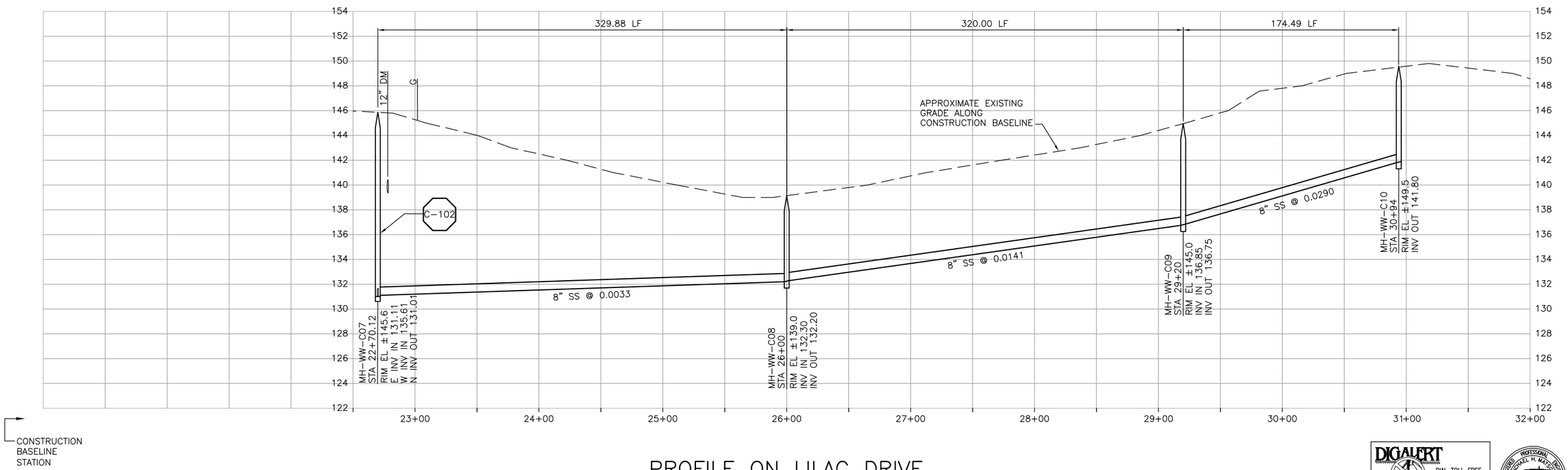

PROFILE ON LILAC DRIVE

DIGALERT
DIAL TOLL FREE
1-800-642-2444
AT LEAST TWO DAYS BEFORE YOU DIG
UNDERGROUND SERVICE ALERT OF NORTHERN CALIFORNIA

REGISTERED PROFESSIONAL ENGINEER
No. C42546
Exp. 3-31-04
CIVIL
STATE OF CALIFORNIA

REV	DATE	BY	DESCRIPTION

SCALE
HORZ: 1"=40'
VERT: 1"=4'

WARNING
0 1/2 1
IF THIS BAR DOES NOT MEASURE 1" THEN DRAWING IS NOT TO SCALE

DESIGNED MDT/MHM
DRAWN JCM
CHECKED GEH

SUBMITTED BY
JOHN A. BERGEN — C31069 LICENSE NO. — 2-16-2004 DATE
STEVEN J. HYLAND — C23892 LICENSE NO. — 2-16-2004 DATE

LOS OSOS
COMMUNITY SERVICES DISTRICT

MWH
Walnut Creek, California

RMC
Raines, Melton & Carella, Inc.

LOS OSOS WASTEWATER PROJECT
PLAN AND PROFILE
LILAC DRIVE
STA 22+70.12 TO STA 30+94

SHEET
C-PP-120

C:\Program Files\ACAD2000\CADRMC\ALOSOSOS\C-PP-120.dwg, Layout1, Feb 04, 2004 10:51pm, John

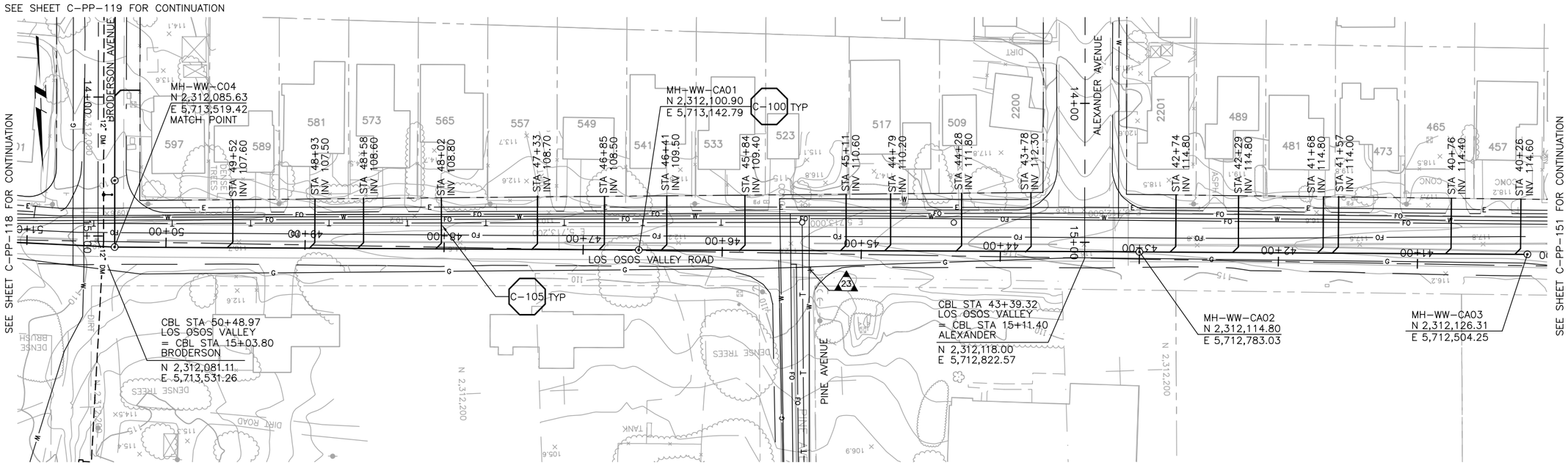

PLAN ON LOS OSOS VALLEY ROAD

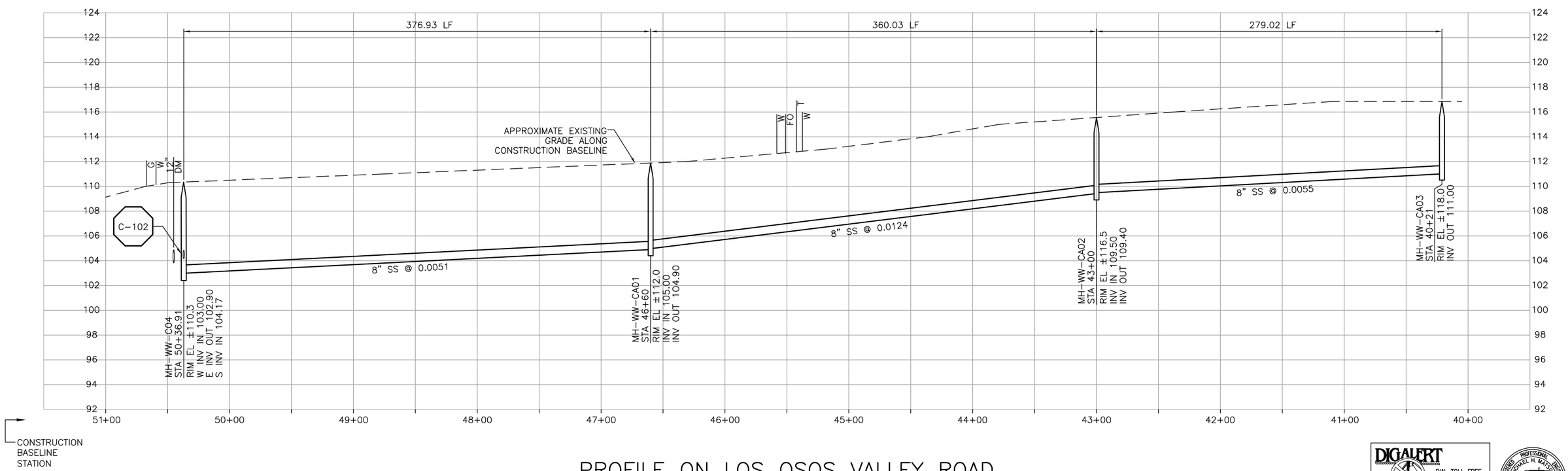

PROFILE ON LOS OSOS VALLEY ROAD

DIGALERT
DIAL TOLL FREE
1-800-642-2444
AT LEAST TWO DAYS BEFORE YOU DIG
UNDERGROUND SERVICE ALERT OF NORTHERN CALIFORNIA

REGISTERED PROFESSIONAL ENGINEER
MICHAEL H. MATTHEWS
No. C42546
Exp. 3-31-04
CIVIL
STATE OF CALIFORNIA

REV	DATE	BY	DESCRIPTION

SCALE
HORZ: 1"=40'
VERT: 1"=4'

WARNING
0 1/2 1
IF THIS BAR DOES NOT MEASURE 1" THEN DRAWING IS NOT TO SCALE

DESIGNED MDT/MHM
DRAWN JCM
CHECKED GEH

SUBMITTED BY
JOHN A. BERGEN — C31069 — LICENSE NO. — 2-16-2004 — DATE
STEVEN J. HYLAND — C23892 — LICENSE NO. — 2-16-2004 — DATE

LOS OSOS COMMUNITY SERVICES DISTRICT

MWH Walnut Creek, California

RMC Raines, Melton & Carella, Inc.

LOS OSOS WASTEWATER PROJECT
PLAN AND PROFILE
LOS OSOS VALLEY ROAD
STA 50+36.91 TO STA 40+21

SHEET
C-PP-121

C:\Program Files\ACAD2000\CADRMC\ALOSOSOS\C-PP-121.dwg, Layout1, Feb 04, 2004 10:53pm, John

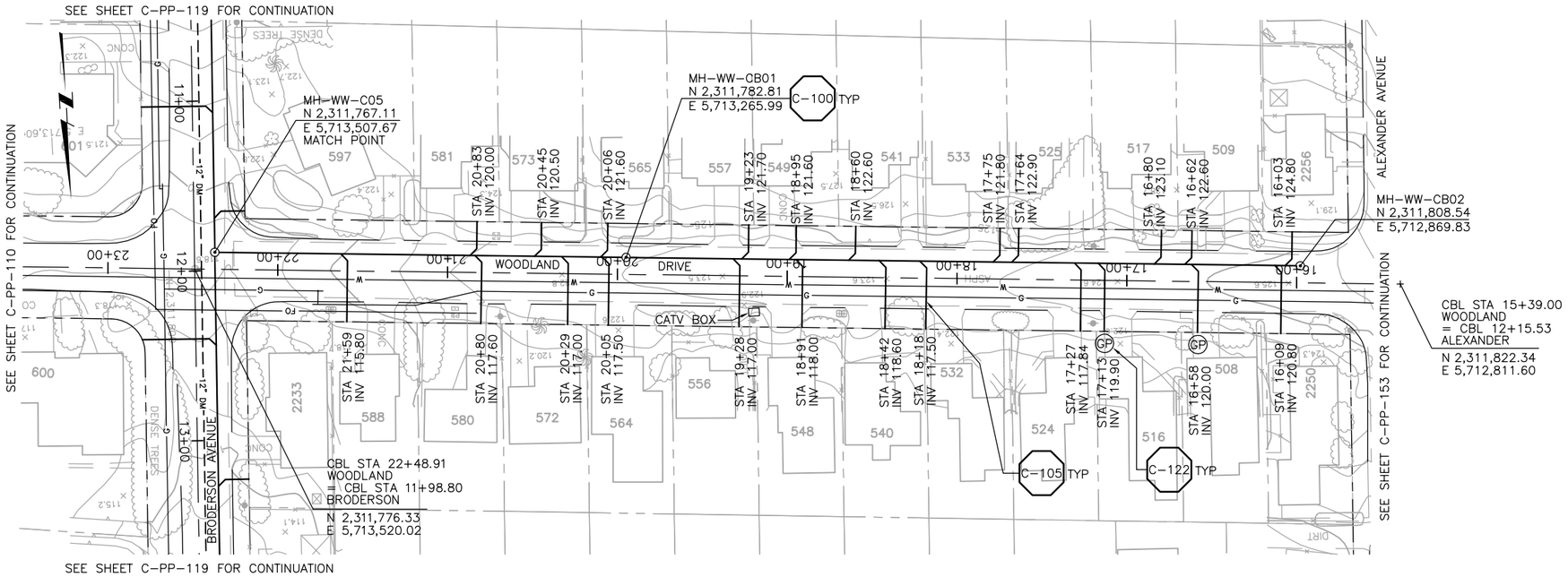

PLAN ON WOODLAND DRIVE

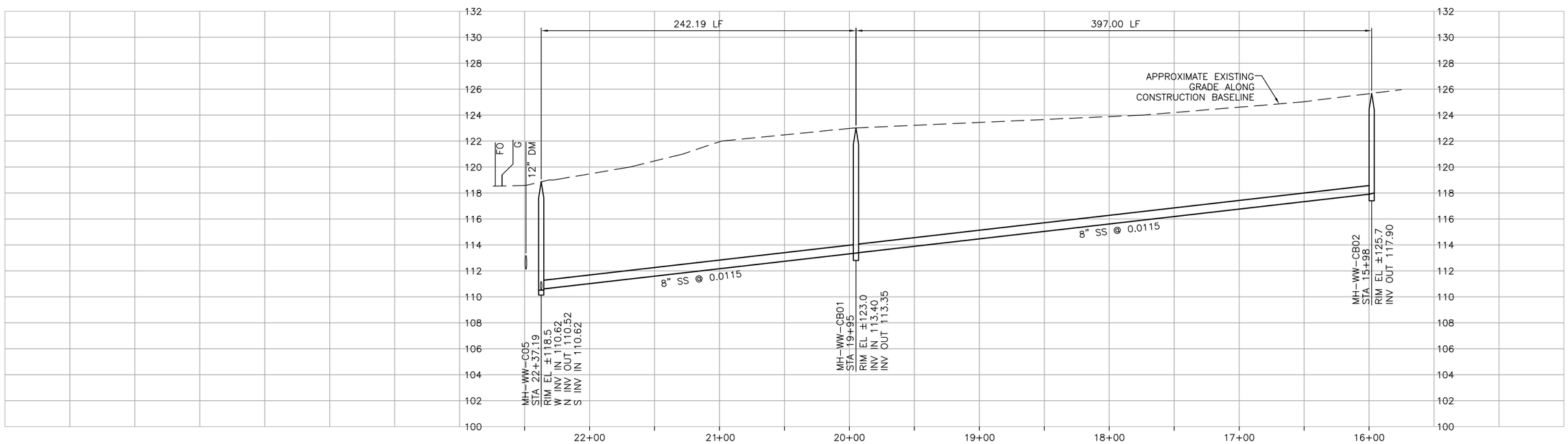

PROFILE ON WOODLAND DRIVE

DIGALERT
DIAL TOLL FREE
1-800-642-2444
AT LEAST TWO DAYS BEFORE YOU DIG
UNDERGROUND SERVICE ALERT OF NORTHERN CALIFORNIA

REGISTERED PROFESSIONAL ENGINEER
No. C42546
Exp. 3-31-04
CIVIL
STATE OF CALIFORNIA

REV	DATE	BY	DESCRIPTION

SCALE
HORZ: 1"=40'
VERT: 1"=4'

WARNING
0 1/2 1
IF THIS BAR DOES NOT MEASURE 1" THEN DRAWING IS NOT TO SCALE

DESIGNED MDT/MHM
DRAWN JCM
CHECKED GEH

SUBMITTED BY
JOHN A. BERGEN — C31069 LICENSE NO. — 2-16-2004 DATE
STEVEN J. HYLAND — C23892 LICENSE NO. — 2-16-2004 DATE

LOS OSOS
COMMUNITY SERVICES DISTRICT

MWH
Walnut Creek, California

RMC
Raines, Melton & Carella, Inc.

LOS OSOS WASTEWATER PROJECT
PLAN AND PROFILE
WOODLAND DRIVE
STA 22+37.19 TO STA 15+98

SHEET
C-PP-122

C:\Program Files\ACAD2000\CADRMC\ALOSOSOS\C-PP-122.dwg, Layout1, Feb 05, 2004 8:41am, John

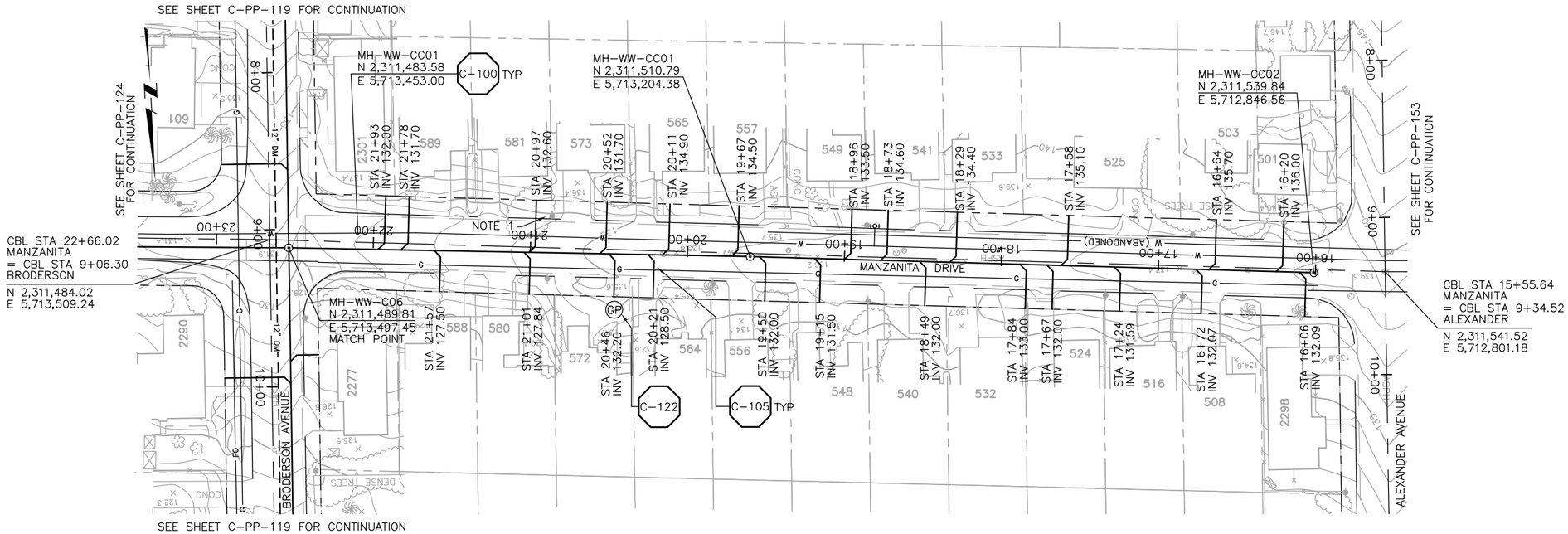

PLAN ON MANZANITA DRIVE

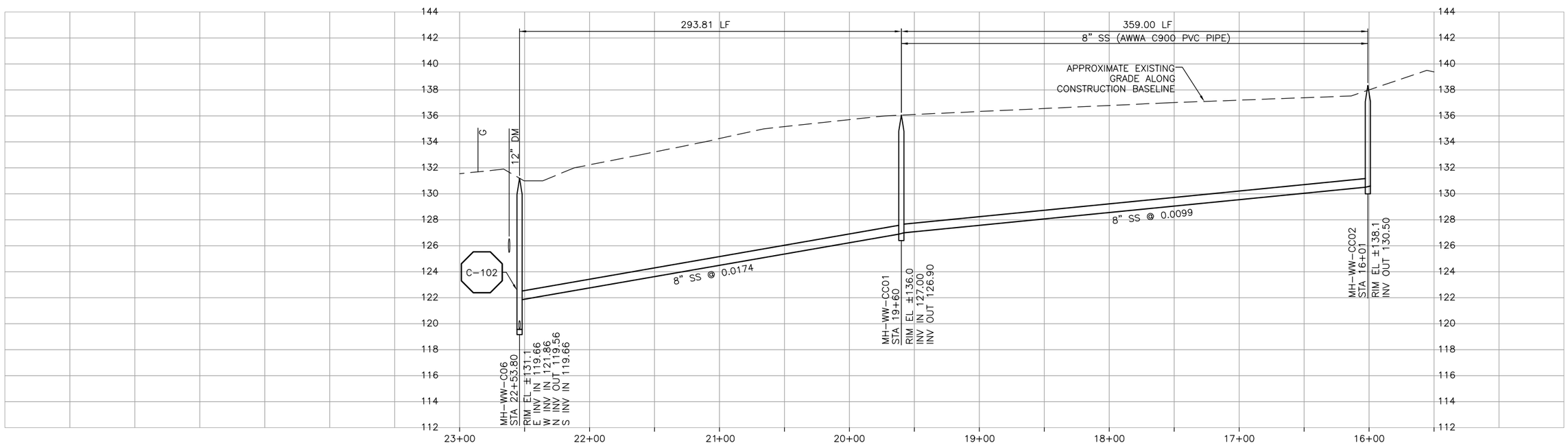

CONSTRUCTION BASELINE STATION

NOTES:
1. CONTRACTOR SHALL TEMPORARILY SUPPORT EXISTING POWER POLE AS REQUIRED. COORDINATE WITH PG&E.

PROFILE ON MANZANITA DRIVE

DIGALERT
DIAL TOLL FREE
1-800-642-2444
AT LEAST TWO DAYS BEFORE YOU DIG
UNDERGROUND SERVICE ALERT OF NORTHERN CALIFORNIA

REGISTERED PROFESSIONAL ENGINEER
No. C42546
Exp. 3-31-04
CIVIL
STATE OF CALIFORNIA

REV	DATE	BY	DESCRIPTION

SCALE
HORZ: 1"=40'
VERT: 1"=4'

WARNING
0 1/2 1
IF THIS BAR DOES NOT MEASURE 1" THEN DRAWING IS NOT TO SCALE

DESIGNED MDT/MHM
DRAWN JCM
CHECKED GEH

SUBMITTED BY
JOHN A. BERGEN — C31069 LICENSE NO. — 2-16-2004 DATE
STEVEN J. HYLAND — C23892 LICENSE NO. — 2-16-2004 DATE

LOS OSOS
COMMUNITY SERVICES DISTRICT

MWH
Walnut Creek, California

RMC
Raines, Melton & Carella, Inc.

LOS OSOS WASTEWATER PROJECT
PLAN AND PROFILE
MANZANITA DRIVE
STA 22+53.80 TO STA 16+01

SHEET
C-PP-123

C:\Program Files\ACAD2000\CADRMC\ALOSOSOS\C-PP-123.dwg, Layout1, Feb 05, 2004 8:42am, John

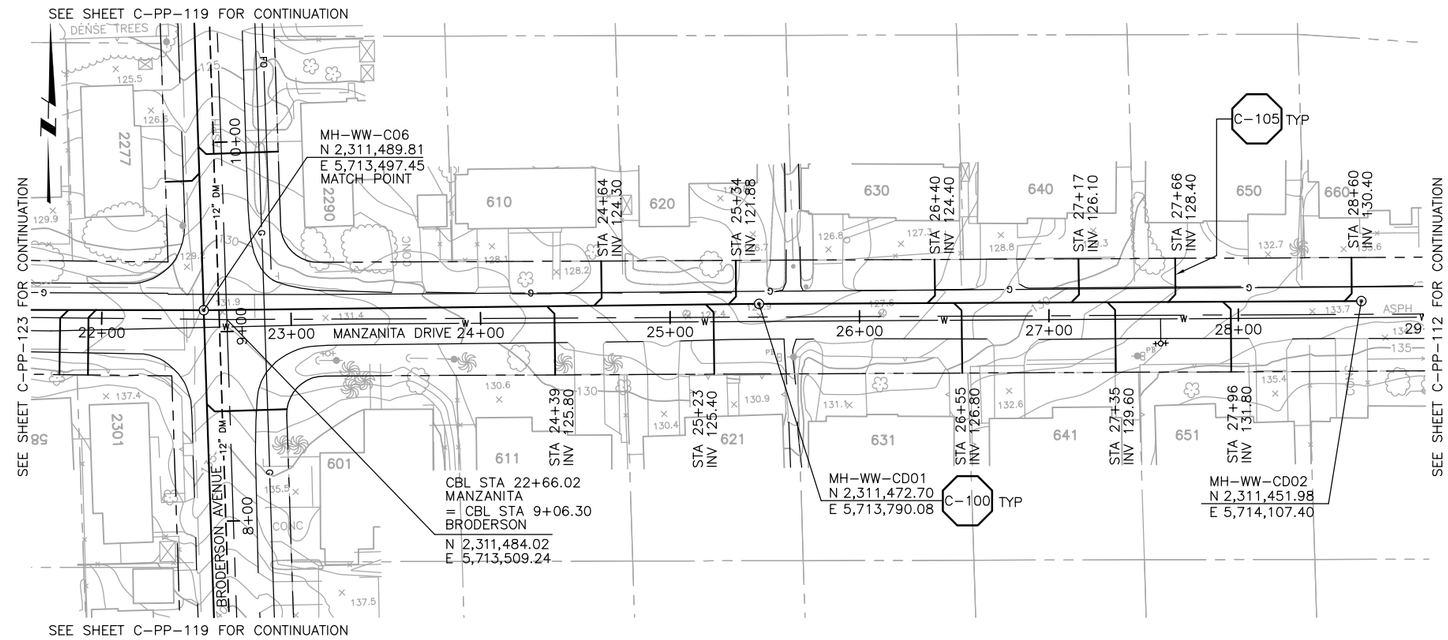

PLAN ON MANZANITA DRIVE

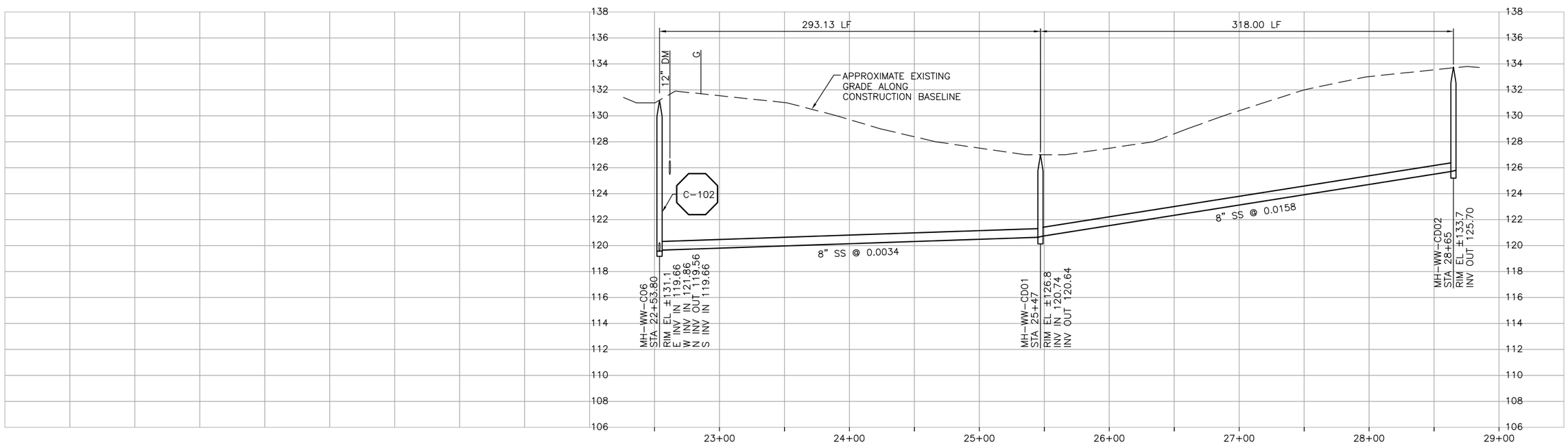

PROFILE ON MANZANITA DRIVE

DIGALERT
DIAL TOLL FREE
1-800-642-2444
AT LEAST TWO DAYS BEFORE YOU DIG
UNDERGROUND SERVICE ALERT OF NORTHERN CALIFORNIA

REGISTERED PROFESSIONAL ENGINEER
No. C42546
Exp. 3-31-04
CIVIL
STATE OF CALIFORNIA

REV	DATE	BY	DESCRIPTION

SCALE
HORZ: 1"=40'
VERT: 1"=4'

WARNING
0 1/2 1
IF THIS BAR DOES NOT MEASURE 1" THEN DRAWING IS NOT TO SCALE

DESIGNED MDT/MHM
DRAWN JCM
CHECKED GEH

SUBMITTED BY
JOHN A. BERGEN — C31069 LICENSE NO. — 2-16-2004 DATE
STEVEN J. HYLAND — C23892 LICENSE NO. — 2-16-2004 DATE

LOS OSOS
COMMUNITY SERVICES DISTRICT

MWH
Walnut Creek, California

RMC
Raines, Melton & Carella, Inc.

LOS OSOS WASTEWATER PROJECT
PLAN AND PROFILE
MANZANITA DRIVE
STA 22+53.80 TO STA 28+65

SHEET
C-PP-124

C:\Program Files\ACAD2000\CADRMC\ALOSOSOS\C-PP-124.dwg, Layout1, Feb 05, 2004 8:43am, John

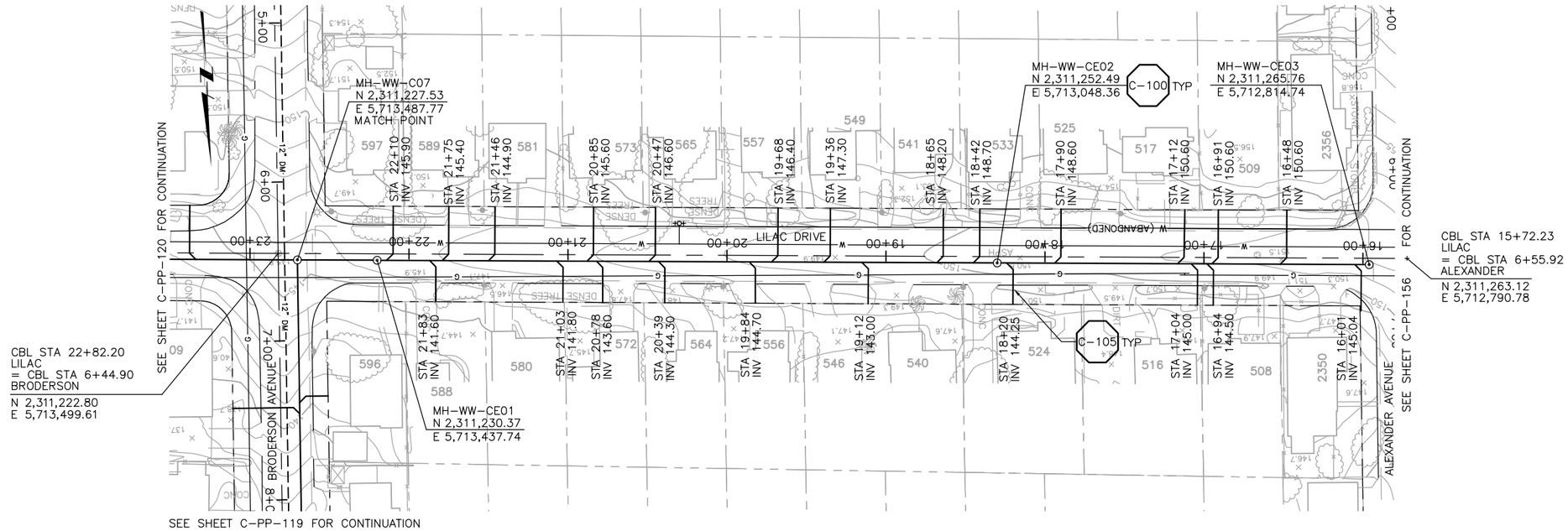

PLAN ON LILAC DRIVE

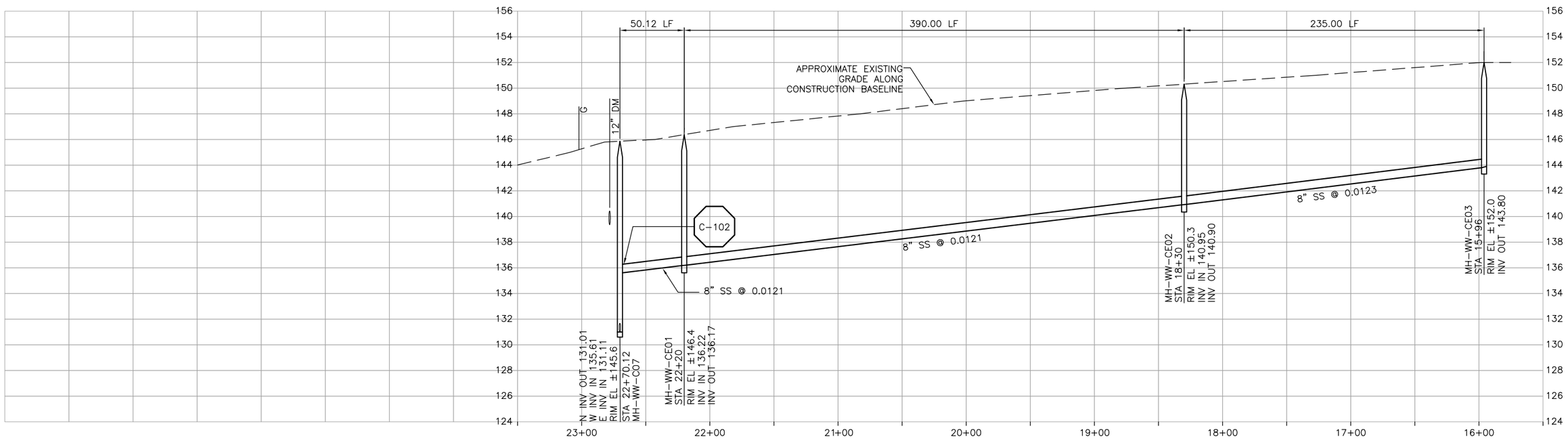

PROFILE ON LILAC DRIVE

DIGALERT
DIAL TOLL FREE
1-800-642-2444
AT LEAST TWO DAYS BEFORE YOU DIG
UNDERGROUND SERVICE ALERT OF NORTHERN CALIFORNIA

REGISTERED PROFESSIONAL ENGINEER
MICHAEL H. MATSUMOTO
No. C42546
Exp. 3-31-04
CIVIL
STATE OF CALIFORNIA

REV	DATE	BY	DESCRIPTION

SCALE
HORZ: 1"=40'
VERT: 1"=4'

WARNING
0 1/2 1
IF THIS BAR DOES NOT MEASURE 1" THEN DRAWING IS NOT TO SCALE

DESIGNED MDT/MHM
DRAWN JCM
CHECKED GEH

SUBMITTED BY
JOHN A. BERGEN — C31069 LICENSE NO. — 2-16-2004 DATE
STEVEN J. HYLAND — C23892 LICENSE NO. — 2-16-2004 DATE

LOS OSOS COMMUNITY SERVICES DISTRICT

MWH Walnut Creek, California

RMC Raines, Melton & Carella, Inc.

LOS OSOS WASTEWATER PROJECT
PLAN AND PROFILE
LILAC DRIVE
STA 22+70.12 TO STA 15+96

SHEET
C-PP-125

C:\Program Files\ACAD2000\CADRMC\ALOSOSOS\C-PP-125.dwg, Layout1, Feb 05, 2004 8:44am, John

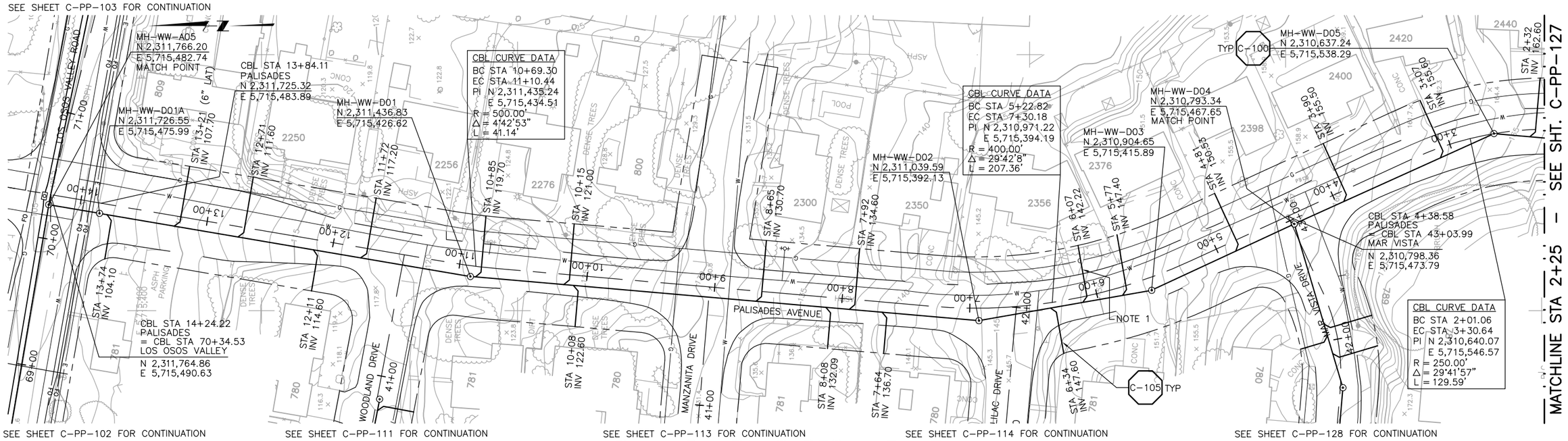

PLAN ON PALISADES AVENUE

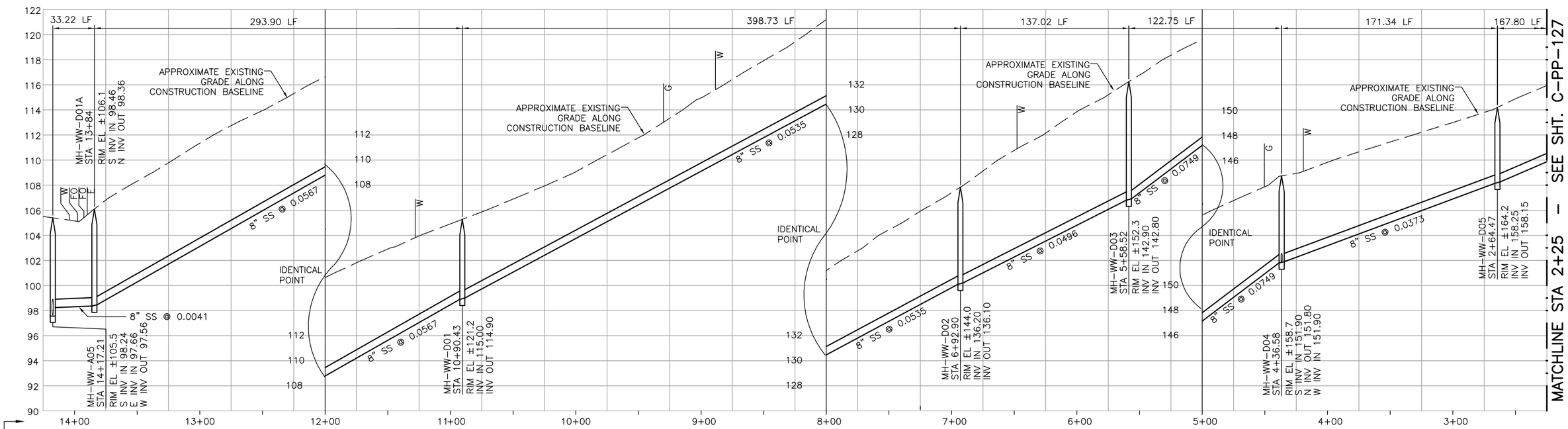

NOTES:
1. LATERAL AT STA 6+07 LESS THAN 3'. USE DIP (PE-LINED) FROM WEST SIDE OF RETAINING WALL TO END.

PROFILE ON PALISADES AVENUE

DIGALERT
DIAL TOLL FREE
1-800-642-2444
AT LEAST TWO DAYS BEFORE YOU DIG
UNDERGROUND SERVICE ALERT OF NORTHERN CALIFORNIA

REGISTERED PROFESSIONAL ENGINEER
No. C42546
Exp. 3-31-04
CIVIL
STATE OF CALIFORNIA

REV	DATE	BY	DESCRIPTION

SCALE: 1" = 40' / 1" = 4'

WARNING: 0 1/2 1 — IF THIS BAR DOES NOT MEASURE 1" THEN DRAWING IS NOT TO SCALE

DESIGNED MDT/MHM
DRAWN JCM
CHECKED GEH

SUBMITTED BY
JOHN A. BERGEN — C31069 LICENSE NO. — 2-16-2004 DATE
STEVEN J. HYLAND — C23892 LICENSE NO. — 2-16-2004 DATE

LOS OSOS COMMUNITY SERVICES DISTRICT

MWH Walnut Creek, California

RMC Raines, Melton & Carella, Inc.

LOS OSOS WASTEWATER PROJECT
PLAN AND PROFILE
PALISADES AVENUE
STA 14+17.21 TO 2+25

SHEET C-PP-126

C:\Program Files\ACAD2000\CADRMC\ALOSOSOS\C-PP-126.dwg, Layout1, Feb 05, 2004 8:45am, John

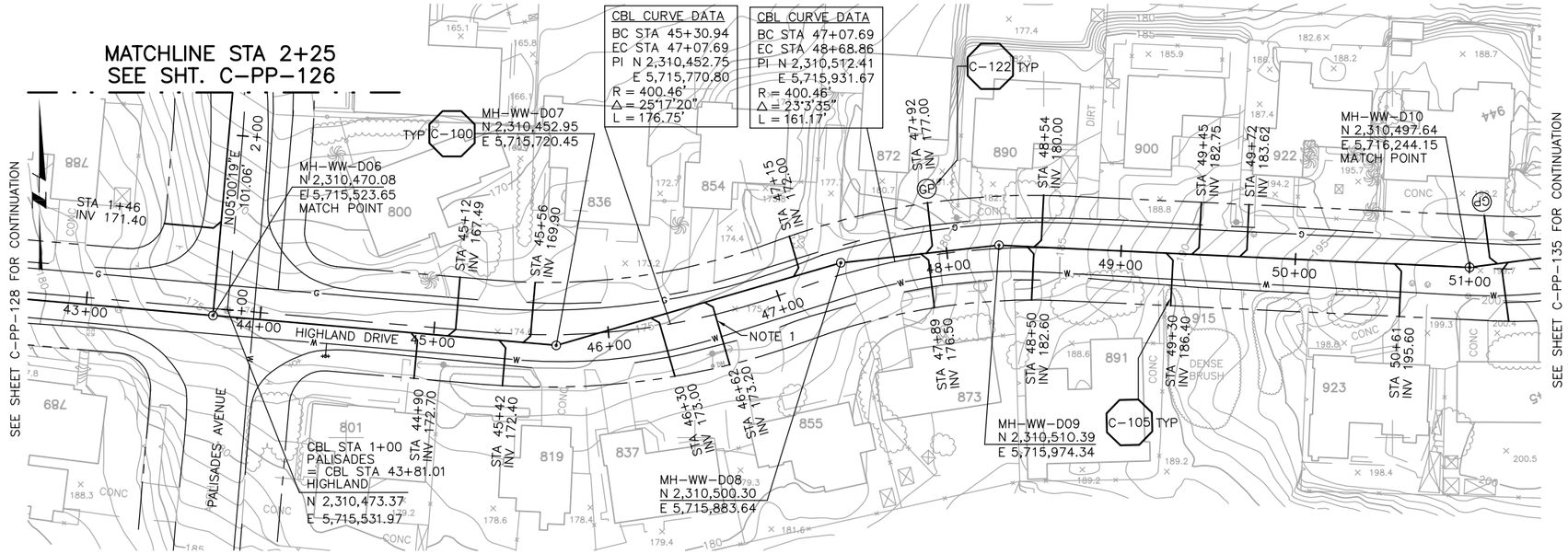

PLAN ON HIGHLAND DRIVE AND PALISADES AVENUE

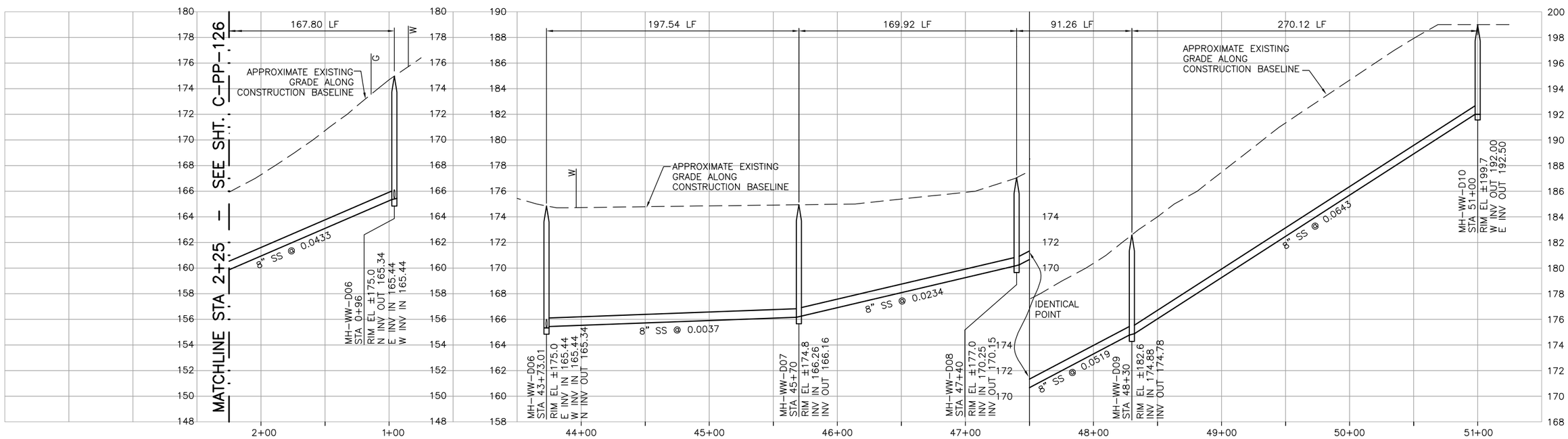

CONSTRUCTION BASELINE STATION

NOTES:
1. CONTRACTOR SHALL TEMPORARILY RELOCATE EXISTING PP GUY WIRE/ANCHOR AS NEEDED FOR LATERAL INSTALLATION.

PROFILE ON PALISADES AVENUE

PROFILE ON HIGHLAND DRIVE

DIGALERT — DIAL TOLL FREE 1-800-642-2444 — AT LEAST TWO DAYS BEFORE YOU DIG — UNDERGROUND SERVICE ALERT OF NORTHERN CALIFORNIA

REGISTERED PROFESSIONAL ENGINEER — ISMAEL H. MATOS — No. C42546 — Exp. 3-31-04 — CIVIL — STATE OF CALIFORNIA

REV	DATE	BY	DESCRIPTION

SCALE: 1" = 40' / 1" = 4'

WARNING: 0 1/2 1 — IF THIS BAR DOES NOT MEASURE 1" THEN DRAWING IS NOT TO SCALE

DESIGNED MDT/MHM
DRAWN JCM
CHECKED GEH

SUBMITTED BY
JOHN A. BERGEN — C31069 LICENSE NO. — 2-16-2004 DATE
STEVEN J. HYLAND — C23892 LICENSE NO. — 2-16-2004 DATE

LOS OSOS COMMUNITY SERVICES DISTRICT

MWH Walnut Creek, California

RMC Raines, Melton & Carella, Inc.

LOS OSOS WASTEWATER PROJECT
PLAN AND PROFILE
HIGHLAND DR — 43+73.01 TO 51+00
PALISADES AVE — 2+25 TO 0+96

SHEET C-PP-127

C:\Program Files\ACAD2000\CADRMC\ALOSOSOS\C-PP-127.dwg, Layout1, Feb 05, 2004 8:46am, John

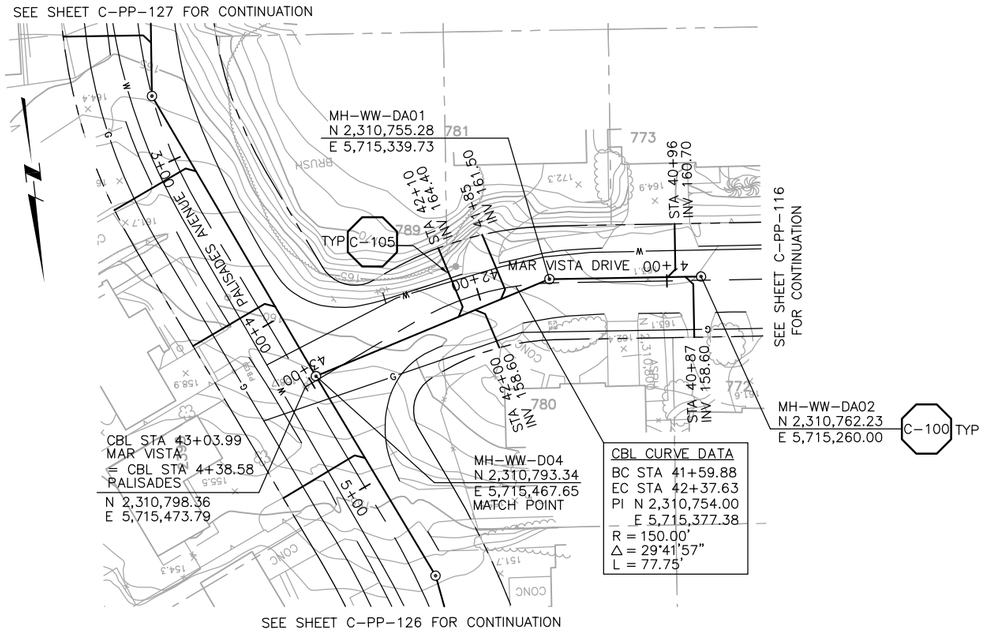

PLAN ON MAR VISTA DRIVE

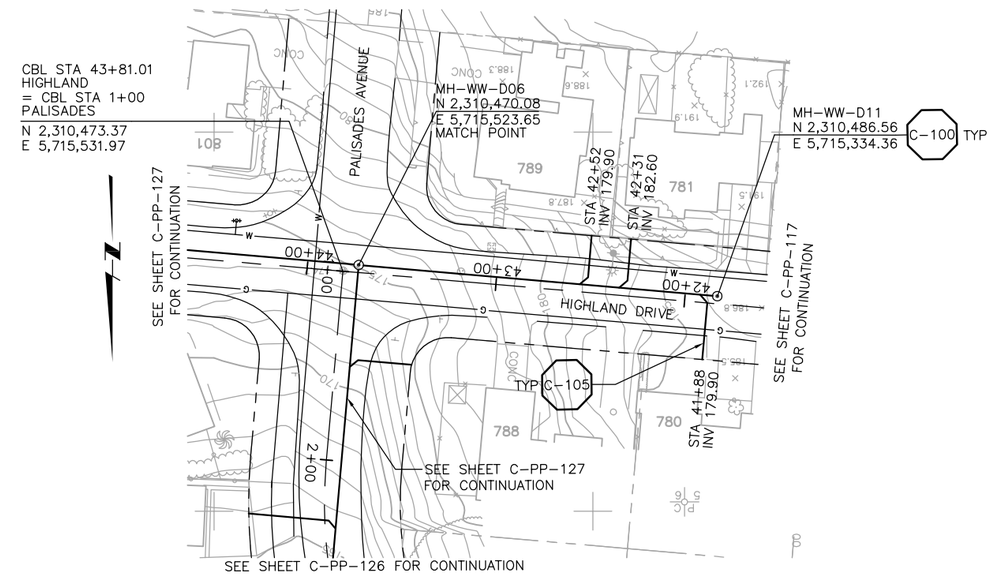

PLAN ON HIGHLAND DRIVE

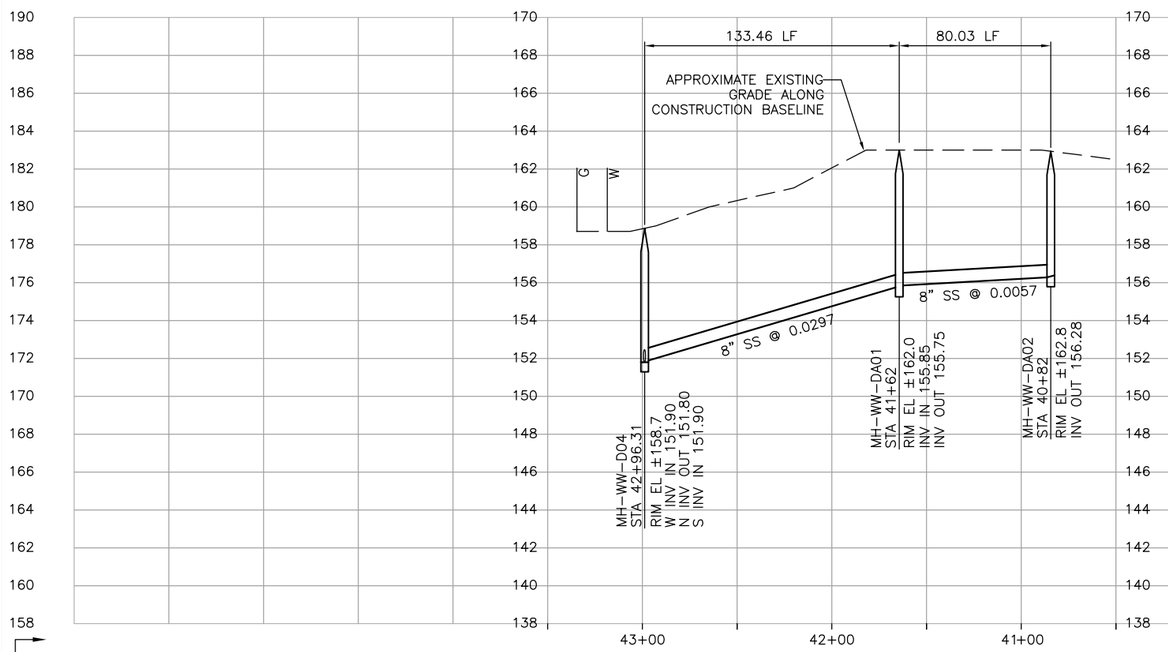

PROFILE ON MAR VISTA DRIVE

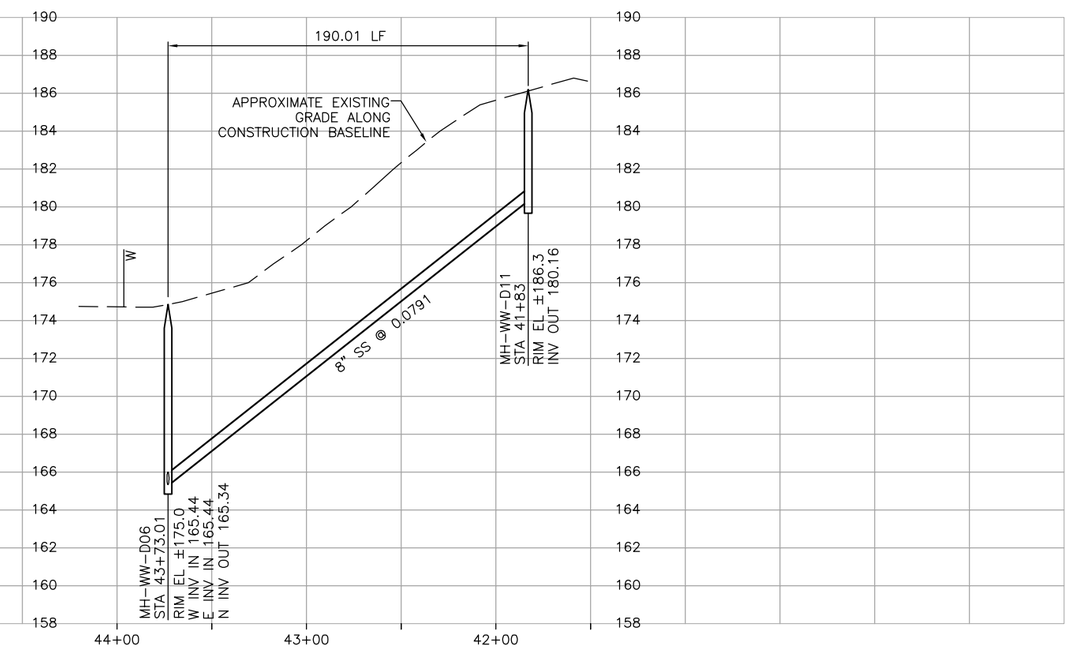

PROFILE ON HIGHLAND DRIVE

DIGALERT — DIAL TOLL FREE 1-800-642-2444 — AT LEAST TWO DAYS BEFORE YOU DIG — UNDERGROUND SERVICE ALERT OF NORTHERN CALIFORNIA

REGISTERED PROFESSIONAL ENGINEER — JAMES H. MARTIN — No. C42546 — Exp. 3-31-04 — CIVIL — STATE OF CALIFORNIA

REV	DATE	BY	DESCRIPTION

SCALE: HORZ: 1"=40' VERT: 1"=4'

WARNING: 0 1/2 1 — IF THIS BAR DOES NOT MEASURE 1" THEN DRAWING IS NOT TO SCALE

DESIGNED MDT/MHM
DRAWN JCM
CHECKED GEH

SUBMITTED BY
JOHN A. BERGEN — C31069 — LICENSE NO. — 2-16-2004 — DATE
STEVEN J. HYLAND — C23892 — LICENSE NO. — 2-16-2004 — DATE

LOS OSOS COMMUNITY SERVICES DISTRICT

MWH Walnut Creek, California

RMC Raines, Melton & Carella, Inc.

LOS OSOS WASTEWATER PROJECT
PLAN AND PROFILE
MAR VISTA DR – 42+96.31 TO 40+82
HIGHLAND DR – 43+73.01 TO 41+83

SHEET C-PP-128

C:\Program Files\ACAD2000\CADRMC\ALOSOSOS\C-PP-128.dwg, Layout1, Feb 05, 2004 8:47am, John

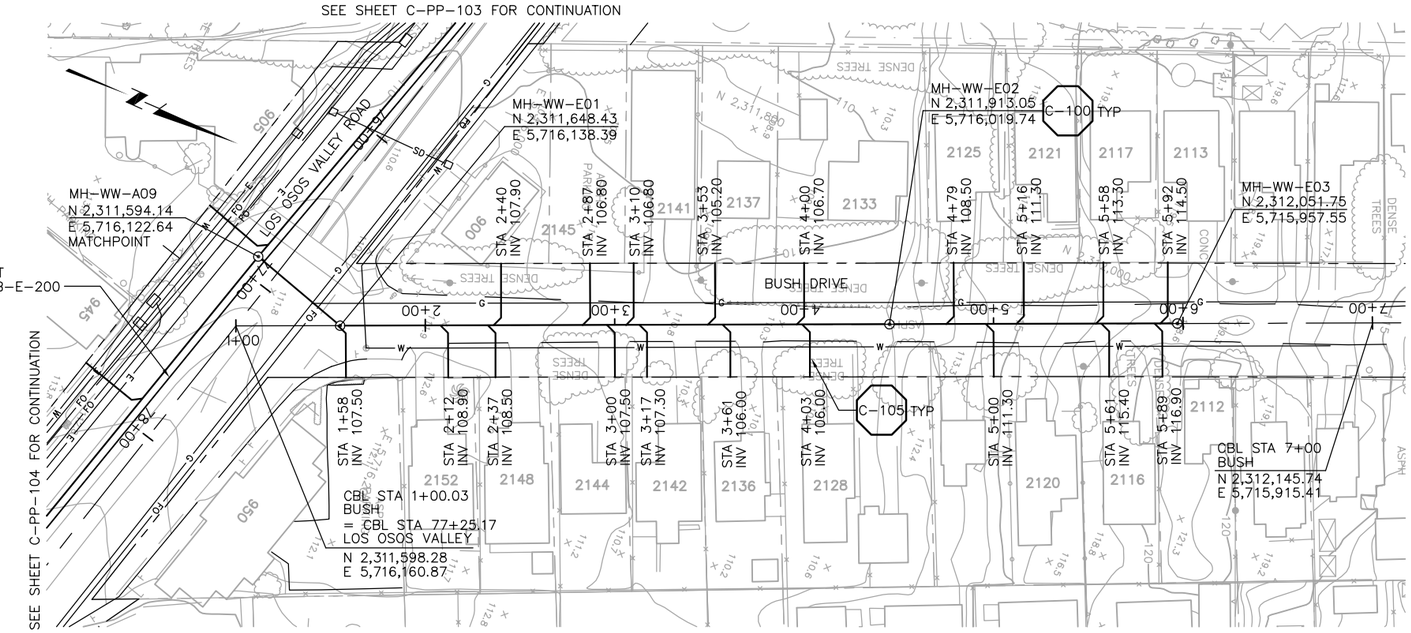

PLAN ON BUSH DRIVE

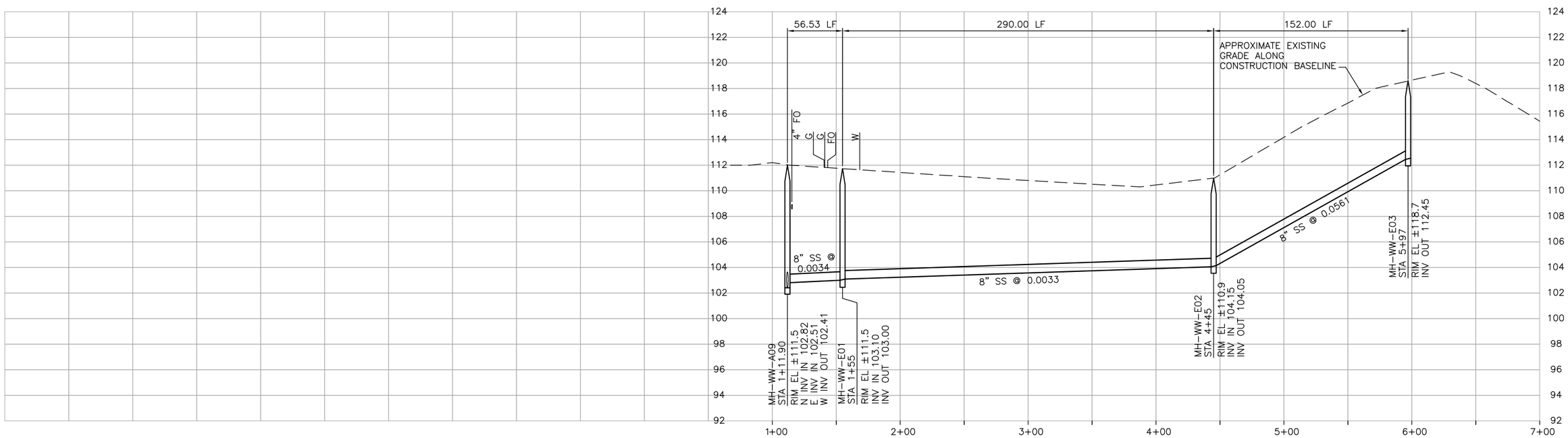

PROFILE ON BUSH DRIVE

DIGALERT
DIAL TOLL FREE
1-800-642-2444
AT LEAST TWO DAYS BEFORE YOU DIG
UNDERGROUND SERVICE ALERT OF NORTHERN CALIFORNIA

REGISTERED PROFESSIONAL ENGINEER
No. C42546
Exp. 3-31-04
CIVIL
STATE OF CALIFORNIA

REV	DATE	BY	DESCRIPTION

SCALE
HORZ: 1"=40'
VERT: 1"=4'

WARNING
0 1/2 1
IF THIS BAR DOES NOT MEASURE 1" THEN DRAWING IS NOT TO SCALE

DESIGNED MDT/MHM
DRAWN JCM
CHECKED GEH

SUBMITTED BY
JOHN A. BERGEN — C31069 LICENSE NO. — 2-16-2004 DATE
STEVEN J. HYLAND — C23892 LICENSE NO. — 2-16-2004 DATE

LOS OSOS
COMMUNITY SERVICES DISTRICT

MWH
Walnut Creek, California

RMC
Raines, Melton & Carella, Inc.

LOS OSOS WASTEWATER PROJECT
PLAN AND PROFILE
BUSH DRIVE
STA 1+11.90 TO STA 5+97

SHEET
C-PP-129

C:\Program Files\ACAD2000\CADRMC\ALOSOSOS\C-PP-129.dwg, Layout1, Feb 05, 2004 8:48am, John

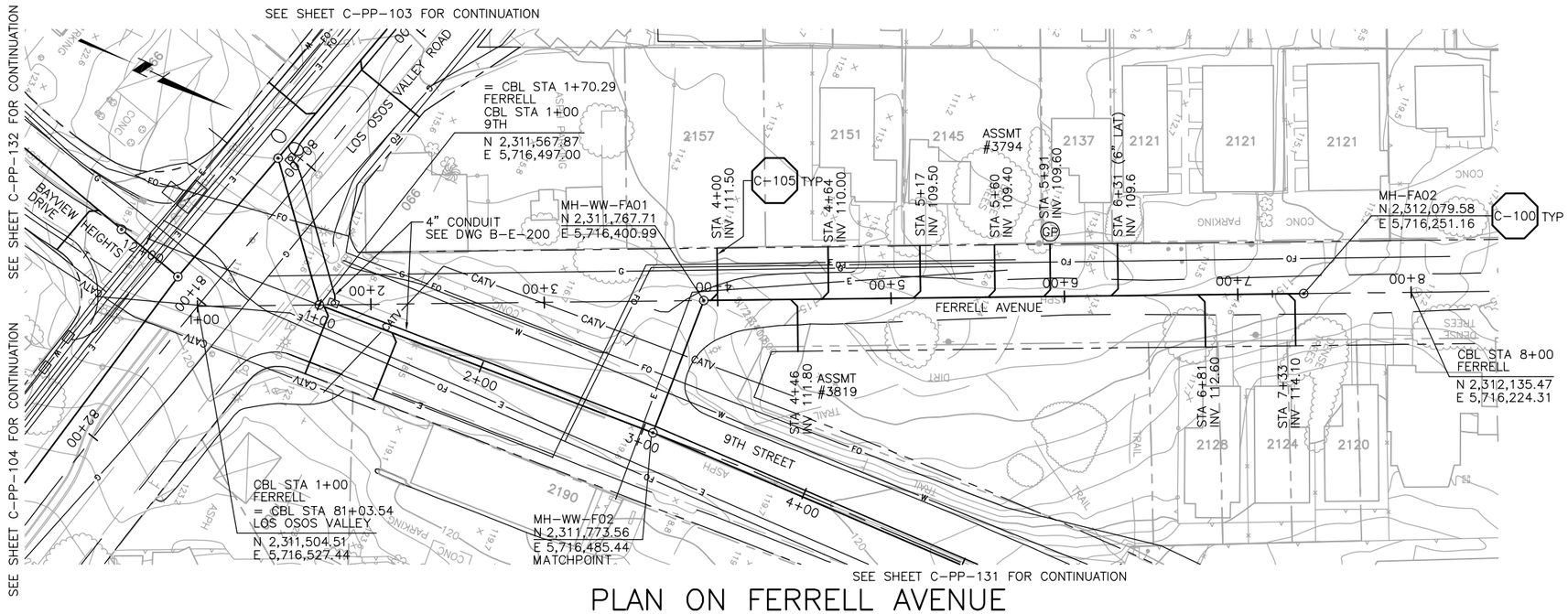

PLAN ON FERRELL AVENUE

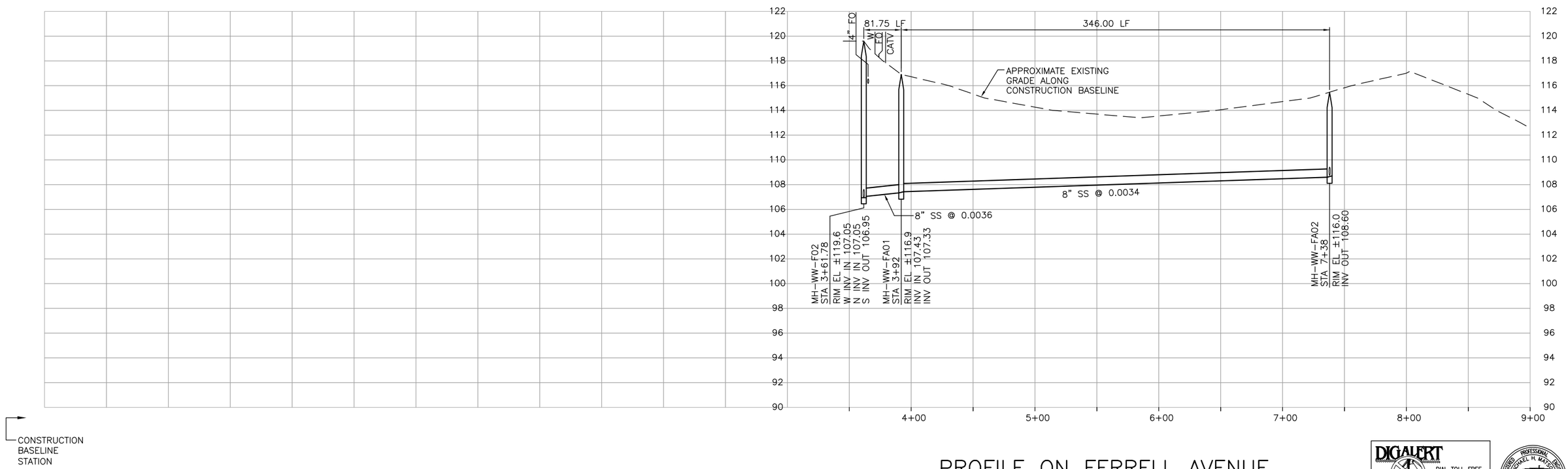

PROFILE ON FERRELL AVENUE

DIGALERT
DIAL TOLL FREE
1-800-642-2444
AT LEAST TWO DAYS BEFORE YOU DIG
UNDERGROUND SERVICE ALERT OF NORTHERN CALIFORNIA

REGISTERED PROFESSIONAL ENGINEER
No. C42546
Exp. 3-31-04
CIVIL
STATE OF CALIFORNIA

REV	DATE	BY	DESCRIPTION

SCALE
HORZ: 1"=40'
VERT: 1"=4'

WARNING
0 1/2 1
IF THIS BAR DOES NOT MEASURE 1" THEN DRAWING IS NOT TO SCALE

DESIGNED MDT/MHM
DRAWN JCM
CHECKED GEH

SUBMITTED BY
JOHN A. BERGEN — C31069 LICENSE NO. — 2-16-2004 DATE
STEVEN J. HYLAND — C23892 LICENSE NO. — 2-16-2004 DATE

LOS OSOS
COMMUNITY SERVICES DISTRICT

MWH
Walnut Creek, California

RMC
Raines, Melton & Carella, Inc.

LOS OSOS WASTEWATER PROJECT
PLAN AND PROFILE
FERRELL AVENUE
STA 3+61.78 TO STA 7+38

SHEET
C-PP-130

C:\Program Files\ACAD2000\CADRMC\ALOSOSOS\C-PP-130.dwg, Layout1, Feb 05, 2004 8:50am, John

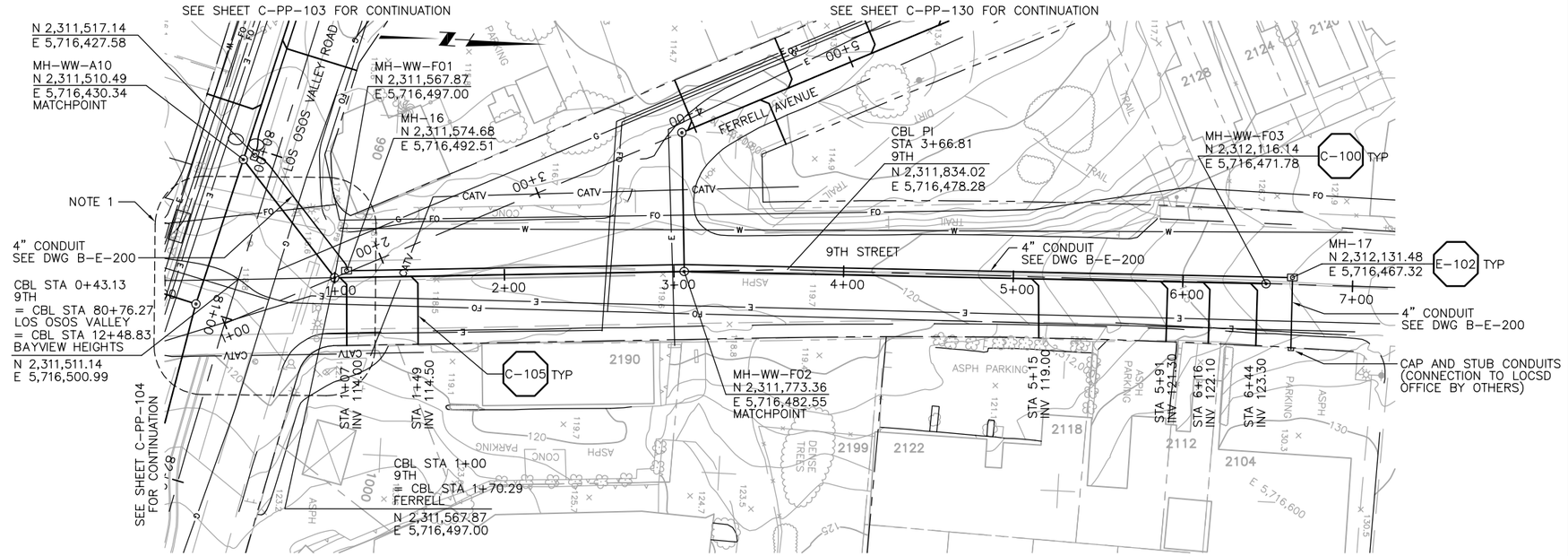

PLAN ON 9TH STREET

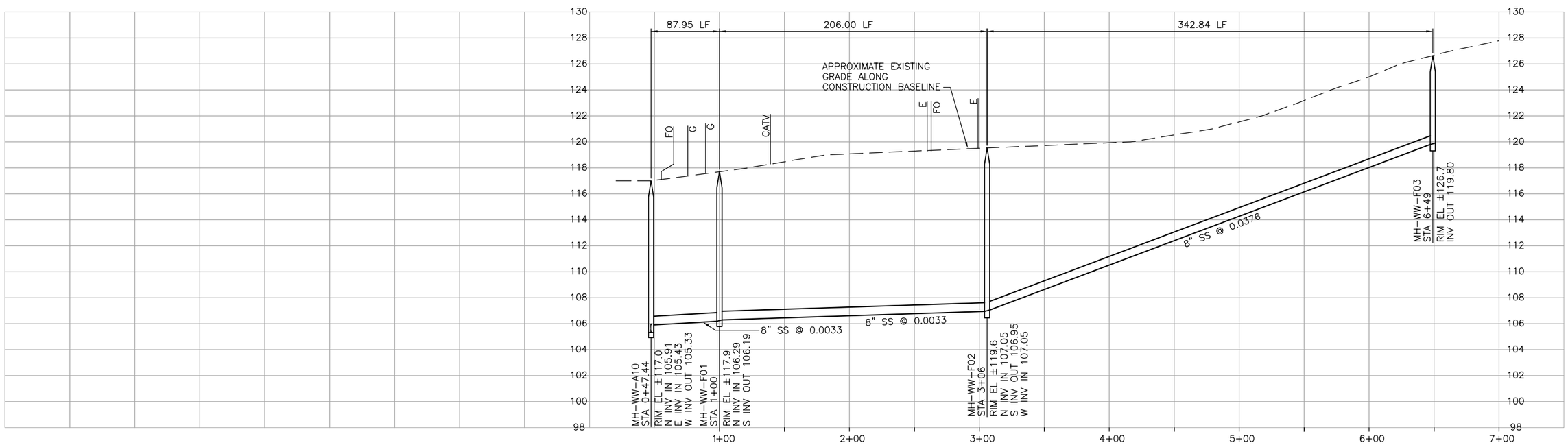

PROFILE ON 9TH STREET

CONSTRUCTION BASELINE STATION

NOTES:

1. CONTRACTOR SHALL REPAIR EXISTING TRAFFIC CONTROL SYSTEM, INCLUDING INSTALLING NEW DETECTOR LOOPS, WHERE CONSTRUCTION RESULTS IN DAMAGE TO EXISTING SYSTEM. CONTRACTOR SHALL COORDINATE REPAIRS WITH COUNTY OF SAN LUIS OBISPO.

DIGALERT
DIAL TOLL FREE
1-800-642-2444
AT LEAST TWO DAYS BEFORE YOU DIG
UNDERGROUND SERVICE ALERT OF NORTHERN CALIFORNIA

REGISTERED PROFESSIONAL ENGINEER
No. C42546
Exp. 3-31-04
CIVIL
STATE OF CALIFORNIA

REV	DATE	BY	DESCRIPTION

SCALE
HORZ: 1"=40'
VERT: 1"=4'

WARNING
0 1/2 1
IF THIS BAR DOES NOT MEASURE 1" THEN DRAWING IS NOT TO SCALE

DESIGNED MDT/MHM
DRAWN JCM
CHECKED GEH

SUBMITTED BY
JOHN A. BERGEN — C31069 LICENSE NO. — 2-16-2004 DATE
STEVEN J. HYLAND — C23892 LICENSE NO. — 2-16-2004 DATE

LOS OSOS
COMMUNITY SERVICES DISTRICT

MWH
Walnut Creek, California

RMC
Raines, Melton & Carella, Inc.

LOS OSOS WASTEWATER PROJECT
PLAN AND PROFILE
9TH STREET
STA 0+47.44 TO STA 6+49

SHEET
C-PP-131

C:\Program Files\ACAD2000\CADRMC\ALOSOSOS\C-PP-131.dwg, Layout1, Feb 05, 2004 8:52am, John

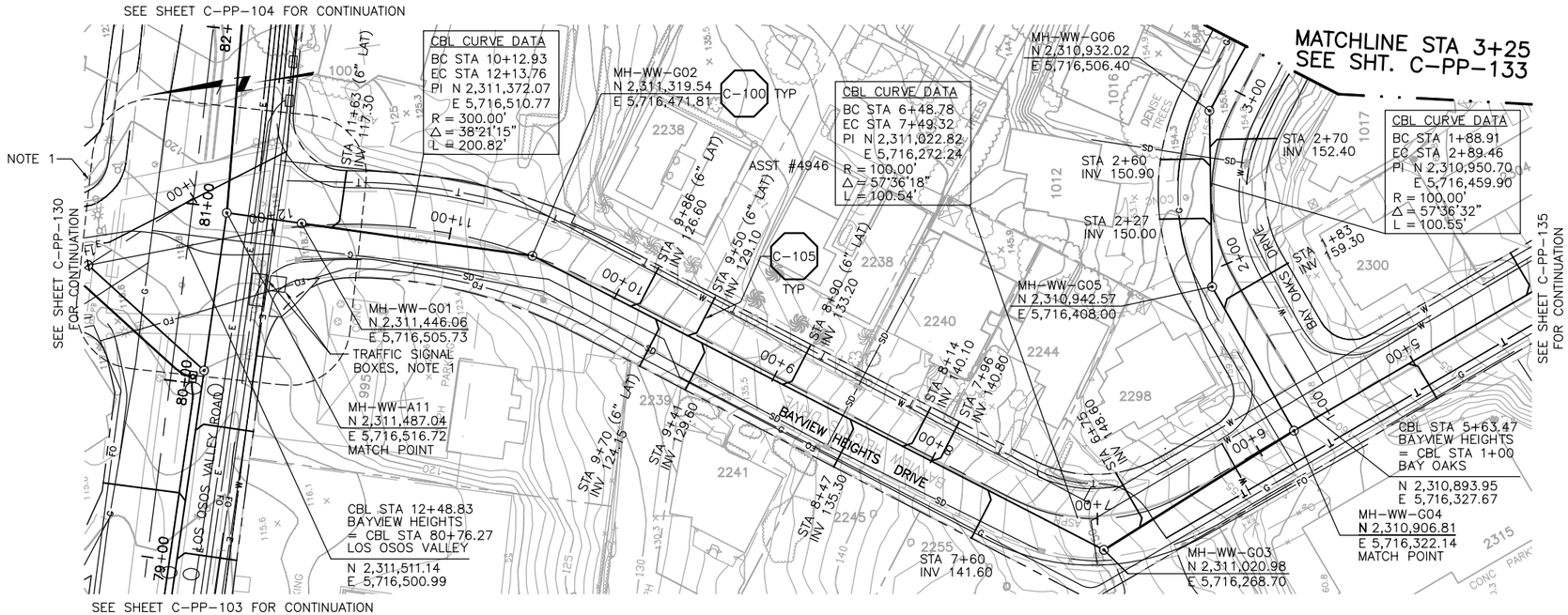

PLAN ON BAYVIEW HEIGHTS DRIVE AND BAY OAKS DRIVE

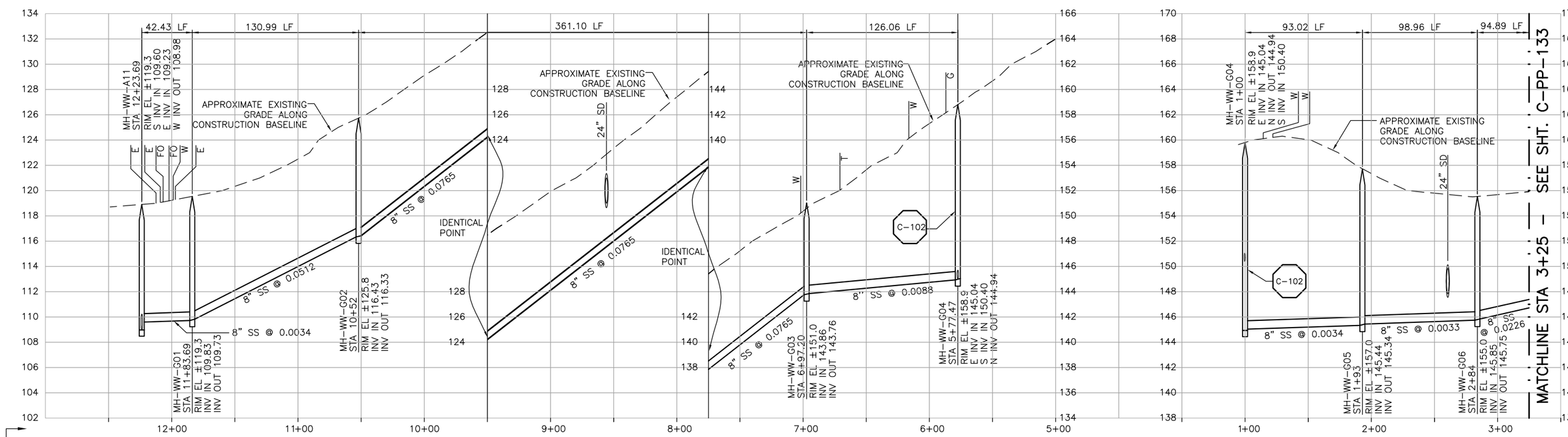

CONSTRUCTION BASELINE STATION

NOTES:

1. CONTRACTOR SHALL REPAIR EXISTING TRAFFIC CONTROL SYSTEM, INCLUDING INSTALLING NEW DETECTOR LOOPS, WHERE CONSTRUCTION RESULTS IN DAMAGE TO EXISTING SYSTEM. CONTRACTOR SHALL COORDINATE REPAIRS WITH COUNTY OF SAN LUIS OBISPO.

PROFILE ON BAYVIEW HEIGHTS DRIVE

PROFILE ON BAY OAKS DRIVE

DIGALERT — DIAL TOLL FREE 1-800-642-2444 — AT LEAST TWO DAYS BEFORE YOU DIG — UNDERGROUND SERVICE ALERT OF NORTHERN CALIFORNIA

REGISTERED PROFESSIONAL ENGINEER — MICHAEL H. MARCHUS — No. C42546 — Exp. 3-31-04 — CIVIL — STATE OF CALIFORNIA

REV	DATE	BY	DESCRIPTION

SCALE: HORZ: 1"=40' VERT: 1"=4'

WARNING: 0 1/2 1 — IF THIS BAR DOES NOT MEASURE 1" THEN DRAWING IS NOT TO SCALE

DESIGNED MDT/MHM
DRAWN JCM
CHECKED GEH

SUBMITTED BY
JOHN A. BERGEN — C31069 LICENSE NO. — 2-16-2004 DATE
STEVEN J. HYLAND — C23892 LICENSE NO. — 2-16-2004 DATE

LOS OSOS COMMUNITY SERVICES DISTRICT

MWH Walnut Creek, California

RMC Raines, Melton & Carella, Inc.

LOS OSOS WASTEWATER PROJECT
PLAN AND PROFILE
BAYVIEW HTS – 12+23.69 TO 5+77.47
BAY OAKS DR – 1+00 TO 3+25

SHEET C-PP-132

C:\Program Files\ACAD2000\CADRMC\ALOSOSOS\C-PP-132.dwg, Layout1, Feb 05, 2004 8:53am, John

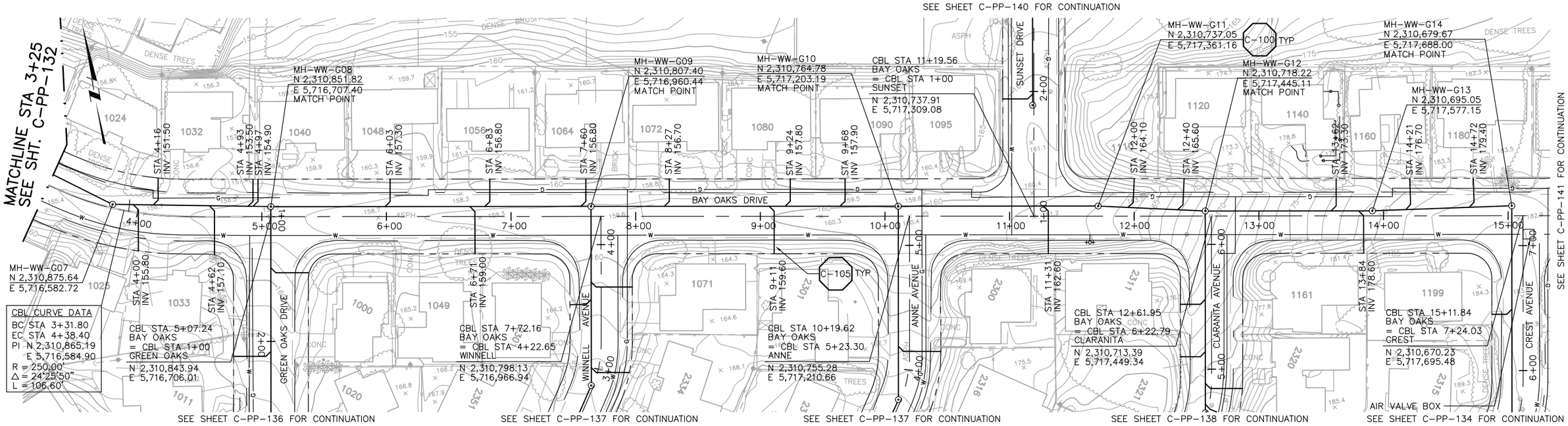

PLAN ON BAY OAKS DRIVE

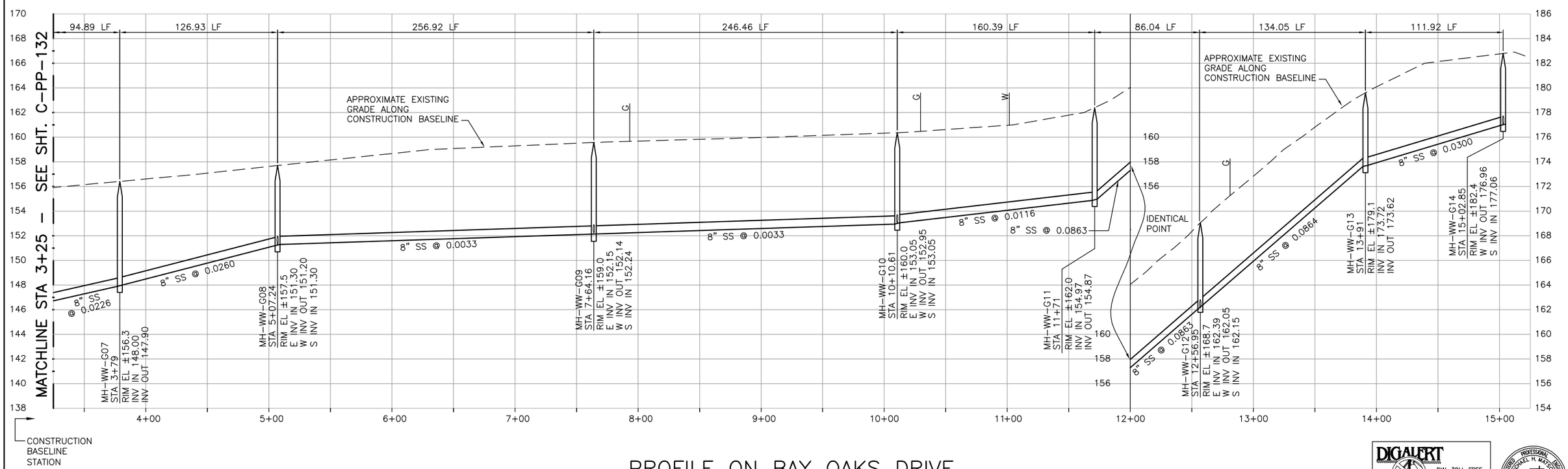

PROFILE ON BAY OAKS DRIVE

DIGALERT
DIAL TOLL FREE
1-800-642-2444
AT LEAST TWO DAYS BEFORE YOU DIG
UNDERGROUND SERVICE ALERT OF NORTHERN CALIFORNIA

REGISTERED PROFESSIONAL ENGINEER
MICHAEL H. MAXWELL
No. C42546
Exp. 3-31-04
CIVIL
STATE OF CALIFORNIA

REV	DATE	BY	DESCRIPTION

SCALE
HORZ: 1"=40'
VERT: 1"=4'

WARNING
0 1/2 1
IF THIS BAR DOES NOT MEASURE 1" THEN DRAWING IS NOT TO SCALE

DESIGNED MDT/MHM
DRAWN JCM
CHECKED GEH

SUBMITTED BY
JOHN A. BERGEN — C31069 — LICENSE NO. — 2-16-2004 — DATE
STEVEN J. HYLAND — C23892 — LICENSE NO. — 2-16-2004 — DATE

LOS OSOS
COMMUNITY SERVICES DISTRICT

MWH
Walnut Creek, California

RMC
Raines, Melton & Carella, Inc.

LOS OSOS WASTEWATER PROJECT
PLAN AND PROFILE
BAY OAKS DRIVE
STA 3+25 TO STA 15+02.85

SHEET
C-PP-133

C:\Program Files\ACAD2000\CADRMC\ALOSOSOS\C-PP-133.dwg, Layout1, Feb 05, 2004 8:54am, John

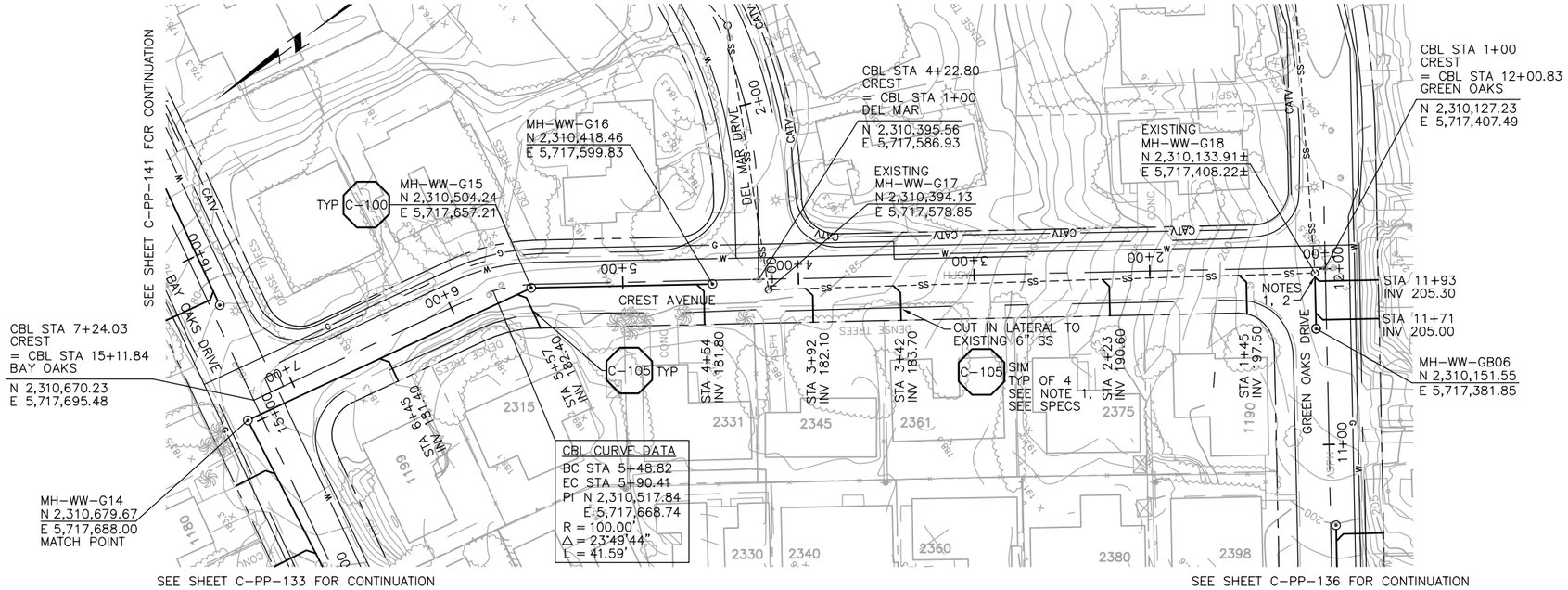

PLAN ON CREST AVENUE AND GREEN OAKS DRIVE

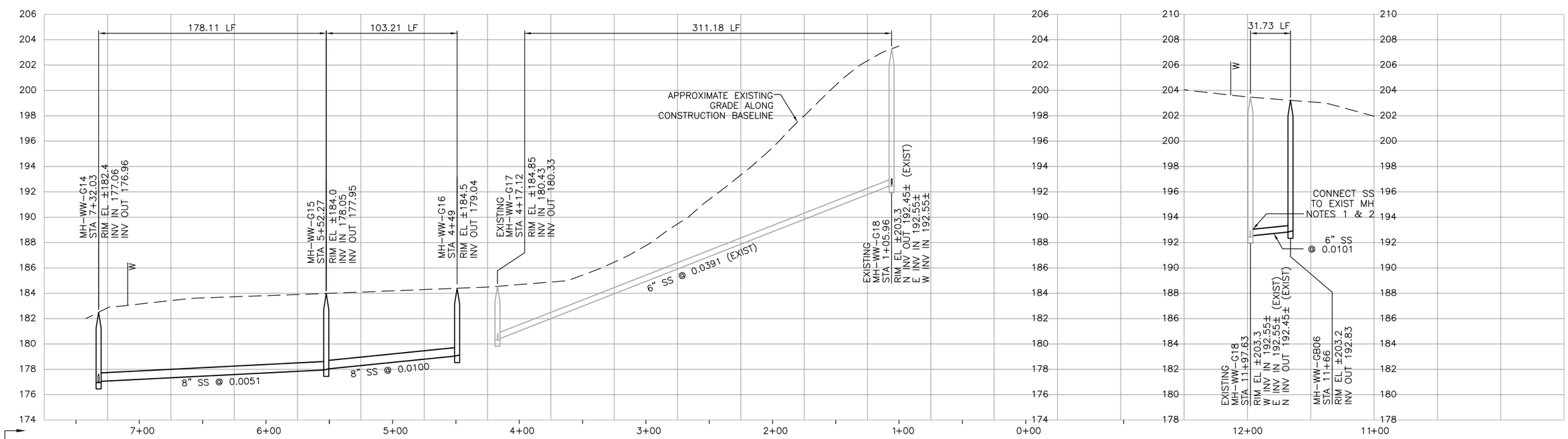

NOTES:

1. CONTRACTOR SHALL VERIFY LOCATION AND DEPTH OF EXISTING SEWER AND MANHOLES AT NEW LATERAL AND SEWER CONNECTIONS. CONNECT LATERALS TO EXISTING 8" VCP SEWER IN ACCORDANCE WITH LOCSD AND SAN LUIS OBISPO COUNTY STANDARDS.
2. CONTRACTOR SHALL CORE DRILL AND SEAL NEW SEWER PENETRATION PER SPECS.

PROFILE ON CREST AVENUE

PROFILE ON GREEN OAKS DRIVE

DIGALERT — DIAL TOLL FREE 1-800-642-2444 AT LEAST TWO DAYS BEFORE YOU DIG — UNDERGROUND SERVICE ALERT OF NORTHERN CALIFORNIA

REGISTERED PROFESSIONAL ENGINEER — MICHAEL H. MARCHUS — No. C42546 — Exp. 3-31-04 — CIVIL — STATE OF CALIFORNIA

REV	DATE	BY	DESCRIPTION

SCALE: HORZ: 1"=40' VERT: 1"=4'

WARNING: 0 1/2 1 — IF THIS BAR DOES NOT MEASURE 1" THEN DRAWING IS NOT TO SCALE

DESIGNED MDT/MHM
DRAWN JCM
CHECKED GEH

SUBMITTED BY
JOHN A. BERGEN — C31069 — LICENSE NO. — 2-16-2004 — DATE
STEVEN J. HYLAND — C23892 — LICENSE NO. — 2-16-2004 — DATE

LOS OSOS COMMUNITY SERVICES DISTRICT

MWH Walnut Creek, California

RMC Raines, Melton & Carella, Inc.

LOS OSOS WASTEWATER PROJECT
PLAN AND PROFILE
CREST – 7+32.03 TO 1+05.96
GREEN OAKS – 11+97.63 TO 11+66

SHEET C-PP-134

C:\Program Files\ACAD2000\CADRMC\ALOSOSOS\C-PP-134.dwg, Layout1, Feb 05, 2004 8:55am, John

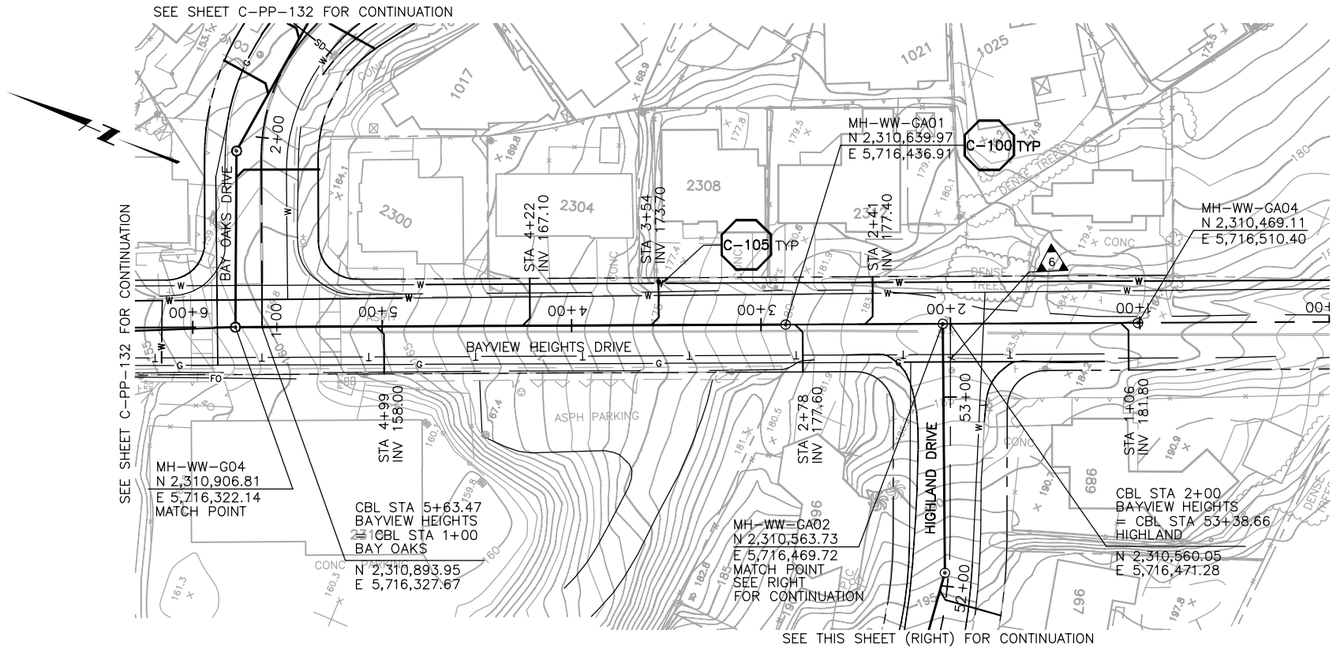

PLAN ON BAYVIEW HEIGHTS DRIVE

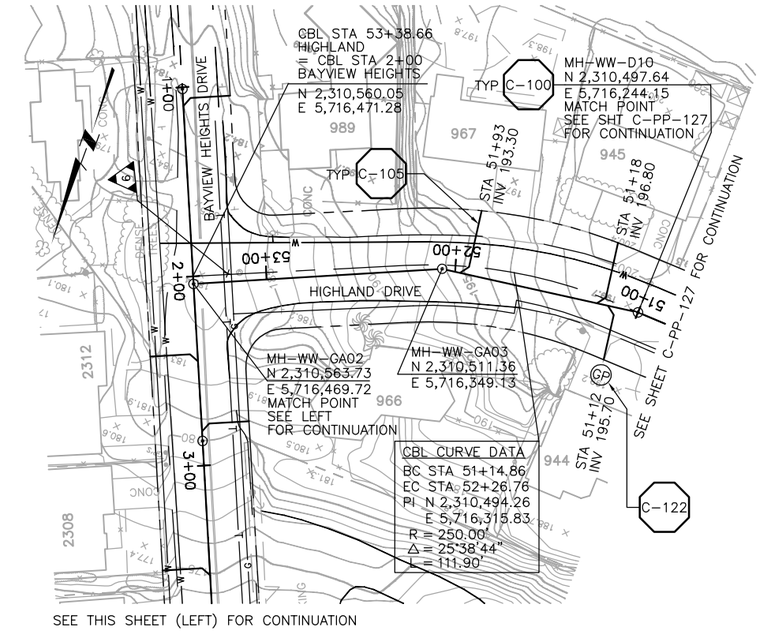

PLAN ON HIGHLAND DRIVE

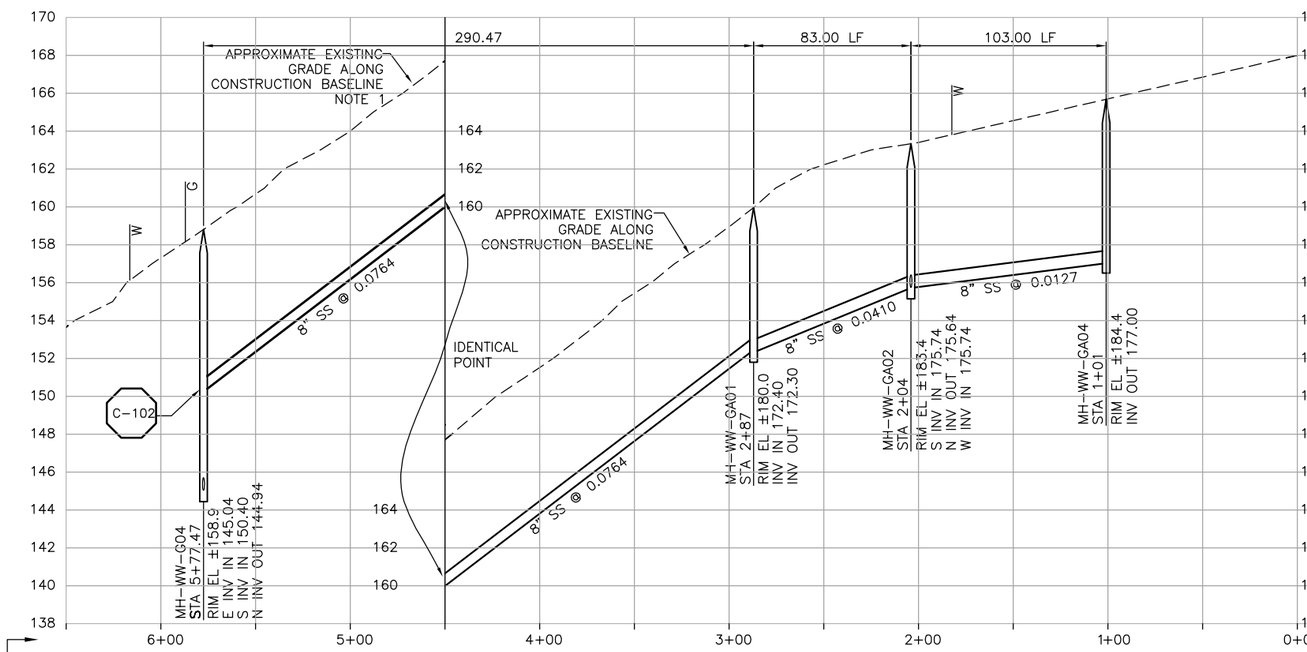

NOTES:

1. CONTRACTOR SHALL NOTE DATE OF AERIAL PHOTOGRAPHY PREDATES DEVELOPMENT ON THIS PORTION OF HIGHLAND DRIVE AND BAYVIEW HEIGHTS DRIVE.

PROFILE ON BAYVIEW HEIGHTS DRIVE

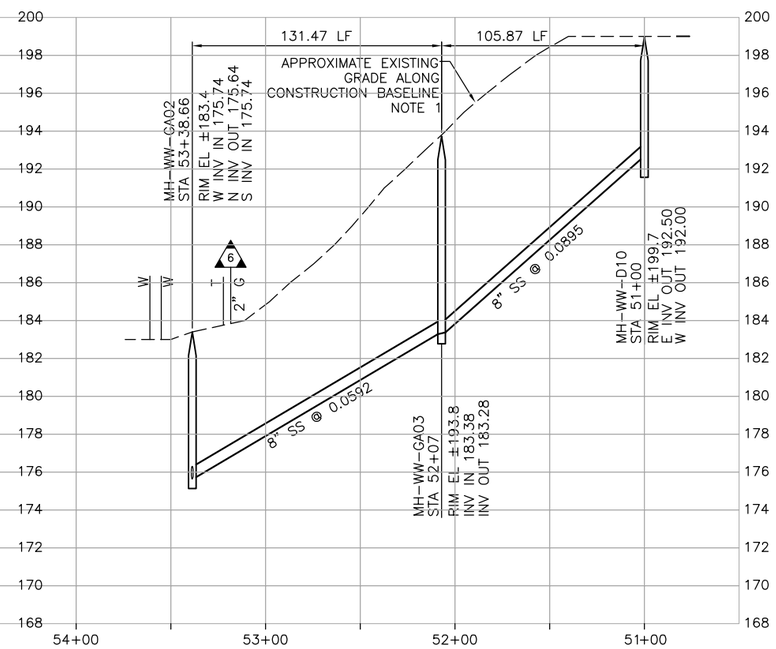

PROFILE ON HIGHLAND DRIVE

DIGALERT
DIAL TOLL FREE
1-800-642-2444
AT LEAST TWO DAYS BEFORE YOU DIG
UNDERGROUND SERVICE ALERT OF NORTHERN CALIFORNIA

REGISTERED PROFESSIONAL ENGINEER
No. C42546
Exp. 3-31-04
CIVIL
STATE OF CALIFORNIA

REV	DATE	BY	DESCRIPTION

SCALE: HORZ: 1"=40' VERT: 1"=4'

WARNING: 0 1/2 1 — IF THIS BAR DOES NOT MEASURE 1" THEN DRAWING IS NOT TO SCALE

DESIGNED MDT/MHM
DRAWN JCM
CHECKED GEH

SUBMITTED BY
JOHN A. BERGEN — C31069 — LICENSE NO. — 2-16-2004 — DATE
STEVEN J. HYLAND — C23892 — LICENSE NO. — 2-16-2004 — DATE

LOS OSOS COMMUNITY SERVICES DISTRICT

MWH Walnut Creek, California

RMC Raines, Melton & Carella, Inc.

LOS OSOS WASTEWATER PROJECT
PLAN AND PROFILE
BAYVIEW HEIGHTS – 5+77.47 TO 1+01
HIGHLAND DR – 53+38.66 TO 51+00

SHEET C-PP-135

C:\Program Files\AUTOCAD2000\CADRMC\ALOSOSOS\C-PP-135.dwg, Layout1, Feb 05, 2004 8:56am, John

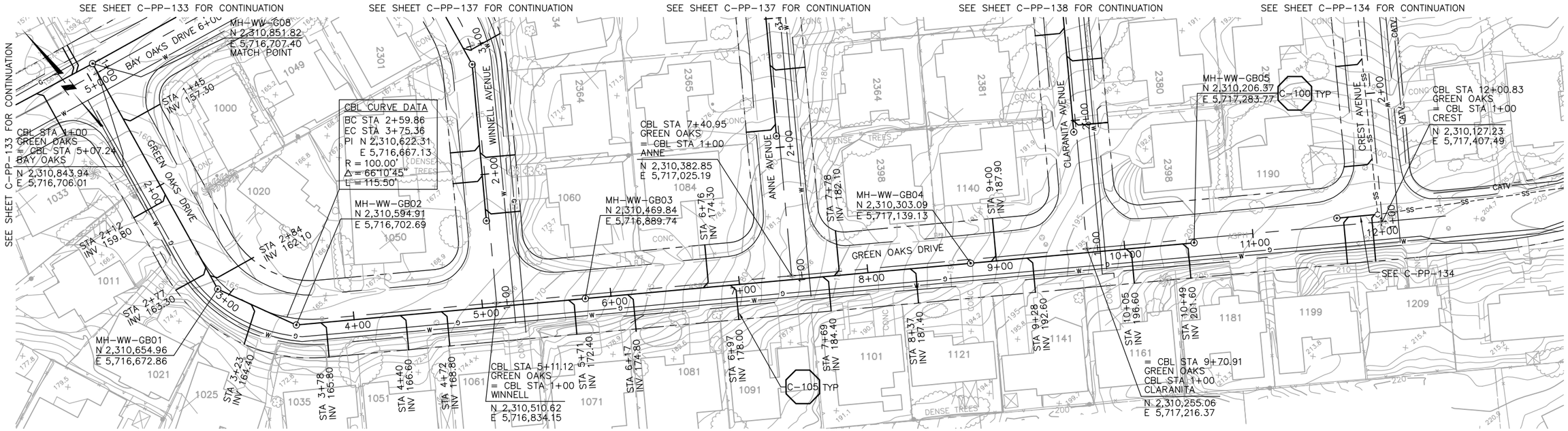

PLAN ON GREEN OAKS DRIVE

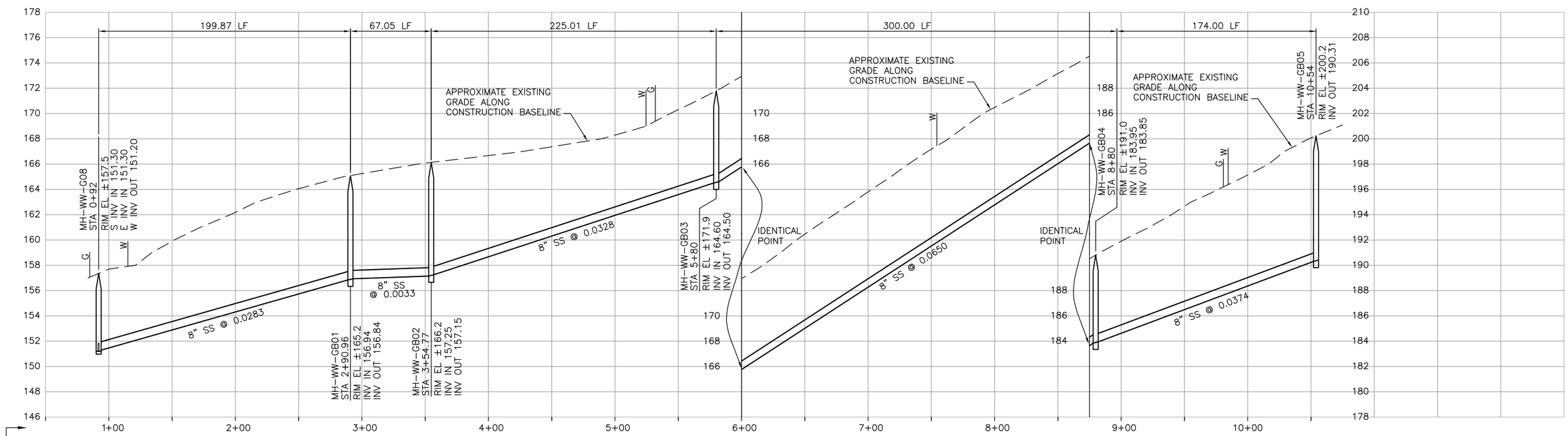

NOTES:

1. CONTRACTOR SHALL VERIFY LOCATION AND DEPTH OF EXISTING SEWER FACILITIES PRIOR TO BEGINNING WORK.
2. CONTRACTOR SHALL CORE DRILL AND SEAL NEW SEWER PENETRATION PER SPECS.

PROFILE ON GREEN OAKS DRIVE

DIGALERT
DIAL TOLL FREE
1-800-642-2444
AT LEAST TWO DAYS BEFORE YOU DIG
UNDERGROUND SERVICE ALERT OF NORTHERN CALIFORNIA

REGISTERED PROFESSIONAL ENGINEER
MICHAEL H. MAYO
No. C42546
Exp. 3-31-04
CIVIL
STATE OF CALIFORNIA

REV	DATE	BY	DESCRIPTION

SCALE
HORZ: 1"=40'
VERT: 1"=4'

WARNING
0 1/2 1
IF THIS BAR DOES NOT MEASURE 1" THEN DRAWING IS NOT TO SCALE

DESIGNED MDT/MHM
DRAWN JCM
CHECKED GEH

SUBMITTED BY
JOHN A. BERGEN — C31069 — LICENSE NO. — 2-16-2004 — DATE
STEVEN J. HYLAND — C23892 — LICENSE NO. — 2-16-2004 — DATE

LOS OSOS
COMMUNITY SERVICES DISTRICT

MWH
Walnut Creek, California

RMC
Raines, Melton & Carella, Inc.

LOS OSOS WASTEWATER PROJECT
PLAN AND PROFILE
GREEN OAKS DRIVE
STA 0+92 TO STA 10+54

SHEET
C-PP-136

C:\Program Files\ACAD2000\CADRMC\ALOSOSOS\C-PP-136.dwg, Layout1, Feb 05, 2004 8:57am, John

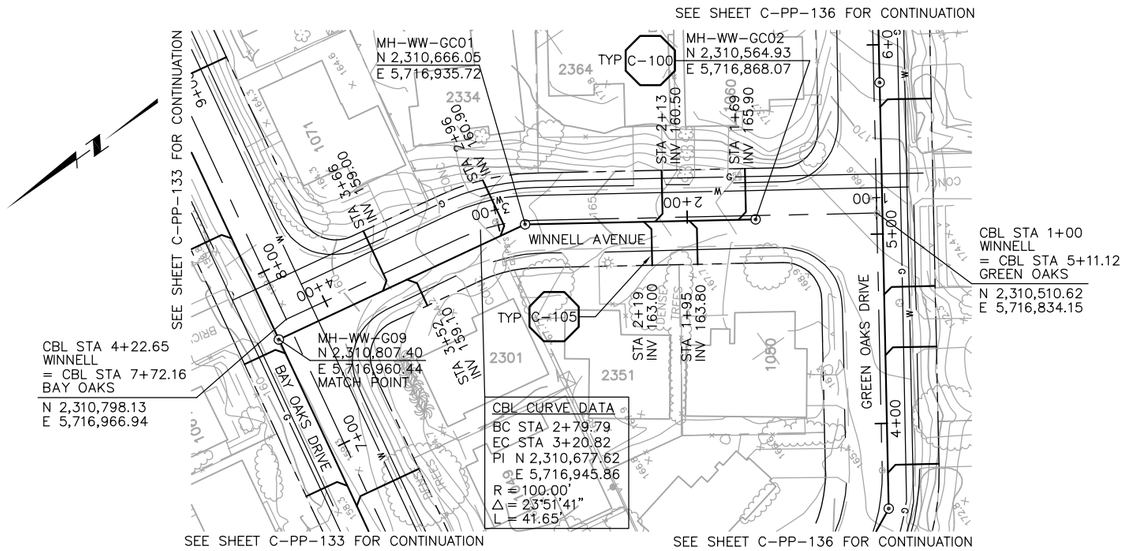

PLAN OF WINNELL AVENUE

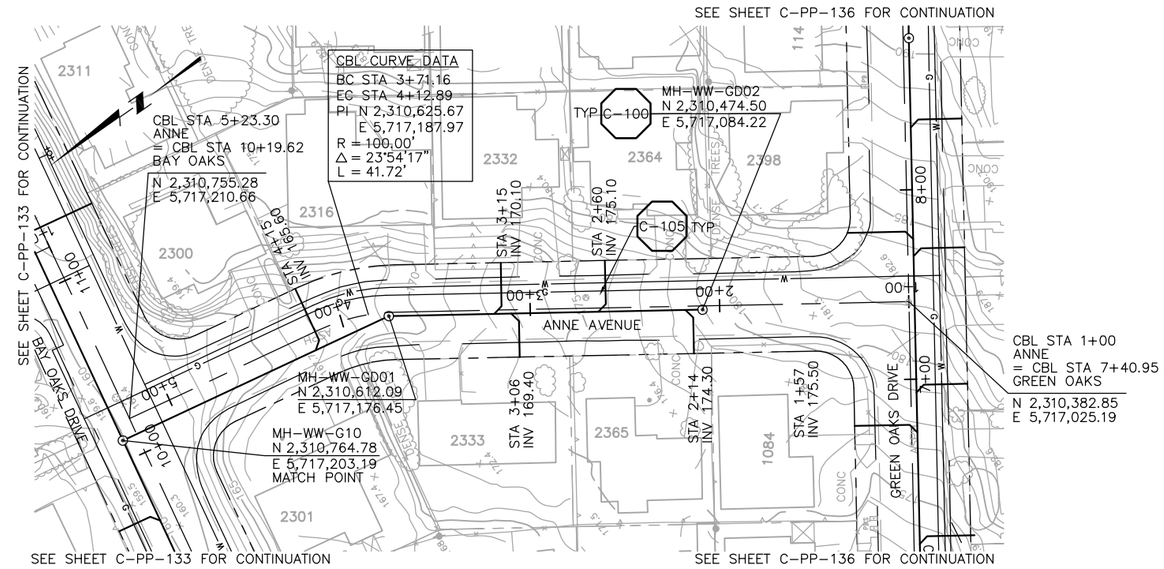

PLAN OF ANNE AVENUE

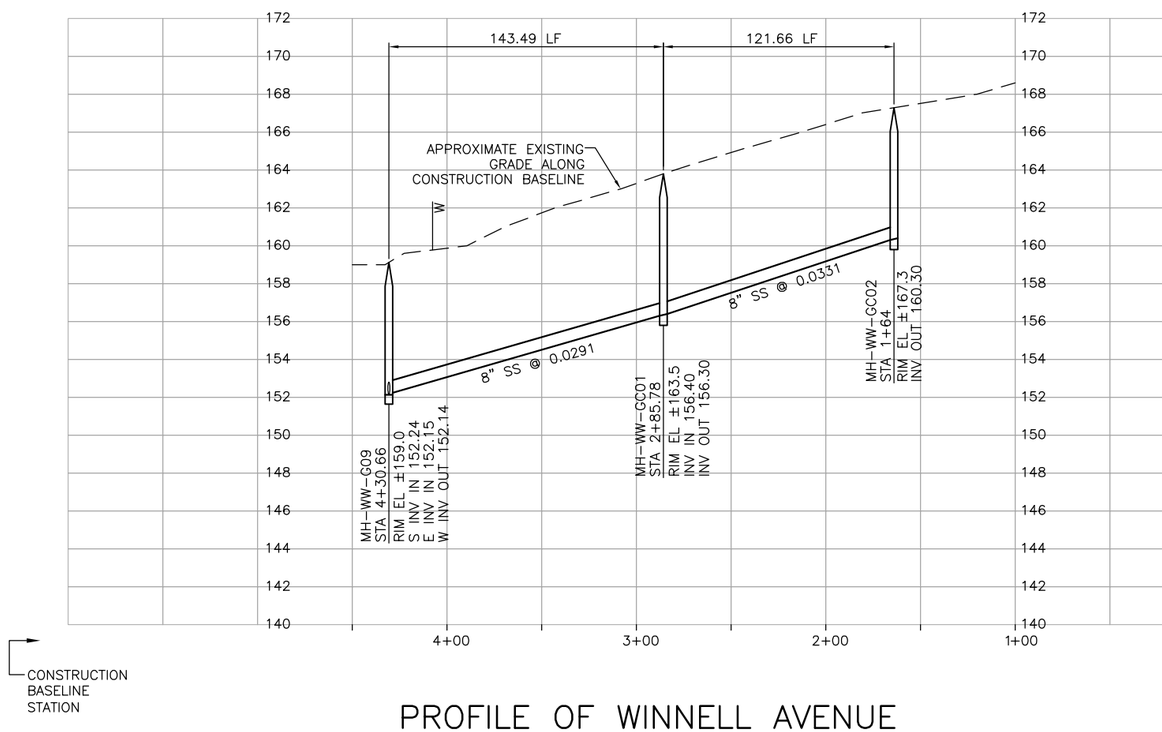

PROFILE OF WINNELL AVENUE

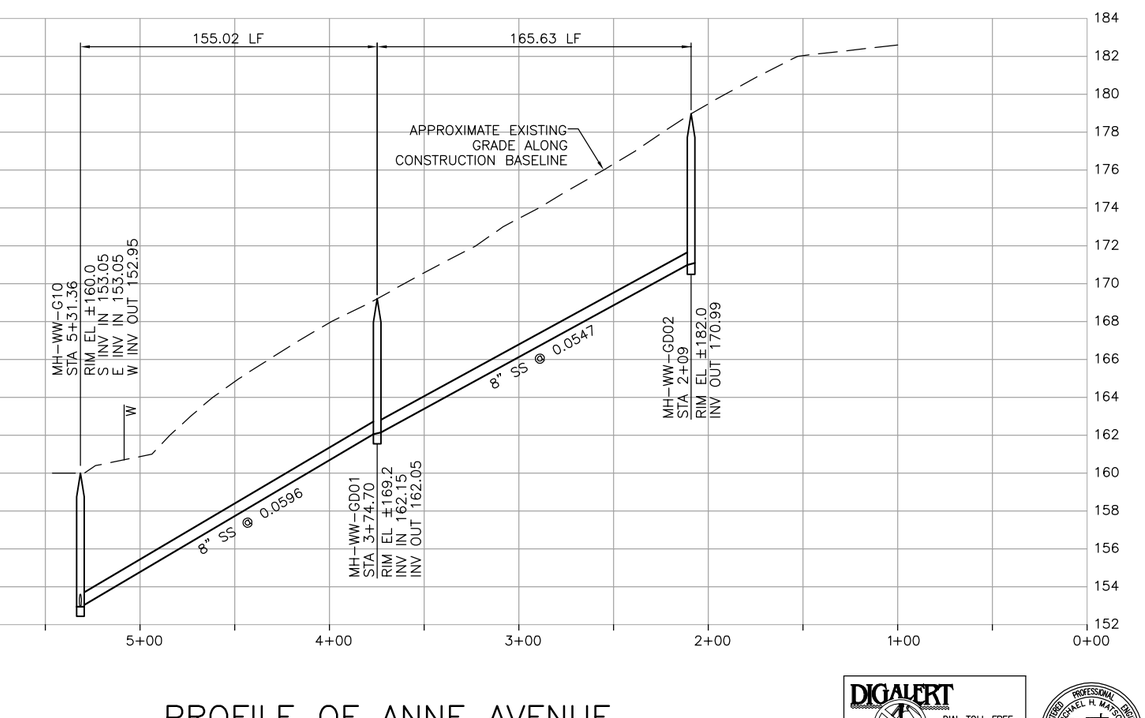

PROFILE OF ANNE AVENUE

DIGALERT
DIAL TOLL FREE
1-800-642-2444
AT LEAST TWO DAYS BEFORE YOU DIG
UNDERGROUND SERVICE ALERT OF NORTHERN CALIFORNIA

REGISTERED PROFESSIONAL ENGINEER MICHAEL H. MAYER No. C42546 Exp. 3-31-04 CIVIL STATE OF CALIFORNIA

REV	DATE	BY	DESCRIPTION

SCALE
HORZ: 1"=40'
VERT: 1"=4'

WARNING
0 1/2 1
IF THIS BAR DOES NOT MEASURE 1" THEN DRAWING IS NOT TO SCALE

DESIGNED MDT/MHM
DRAWN JCM
CHECKED GEH

SUBMITTED BY
JOHN A. BERGEN — C31069 — LICENSE NO. — 2-16-2004 — DATE
STEVEN J. HYLAND — C23892 — LICENSE NO. — 2-16-2004 — DATE

LOS OSOS
COMMUNITY SERVICES DISTRICT

MWH
Walnut Creek, California

RMC
Raines, Melton & Carella, Inc.

LOS OSOS WASTEWATER PROJECT
PLAN AND PROFILE
WINNELL AVENUE – 4+30.66 TO 1+64
ANNE AVENUE – 5+31.36 TO 2+09

SHEET
C-PP-137

C:\Program Files\ACAD2000\CADRMC\ALOSOSOS\C-PP-137.dwg, Layout1, Feb 05, 2004 8:58am, John

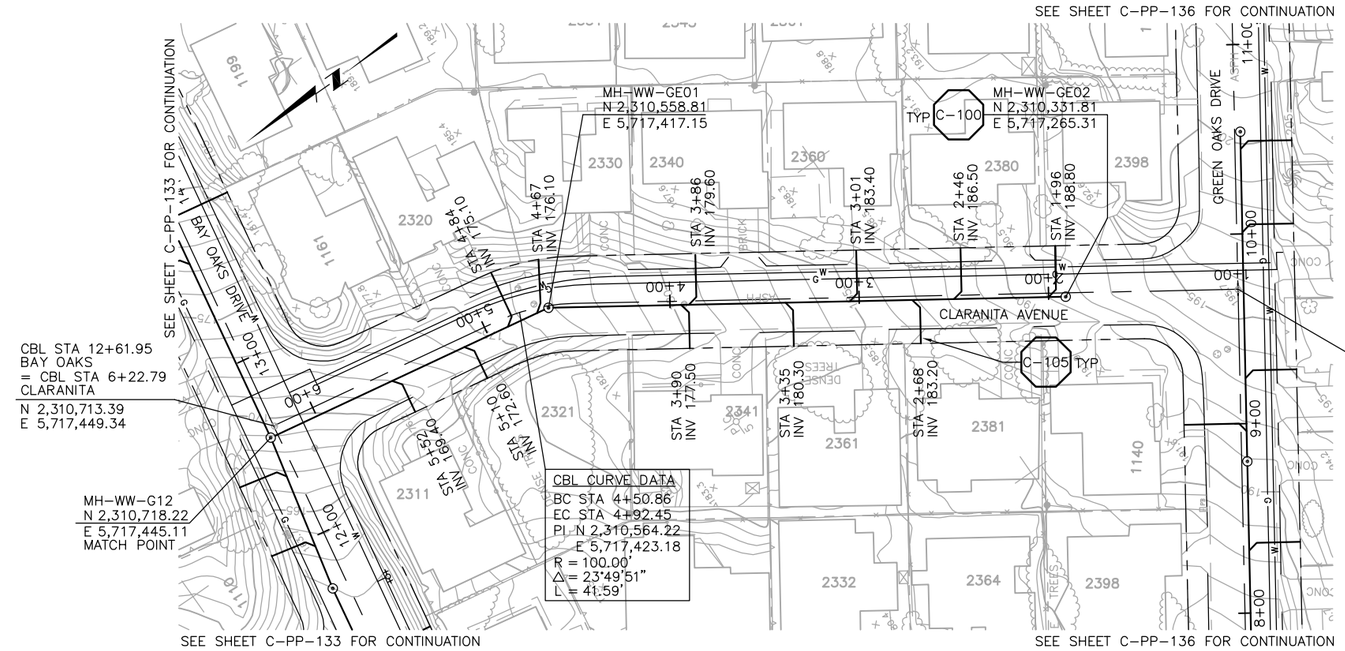

PLAN OF CLARANITA AVENUE

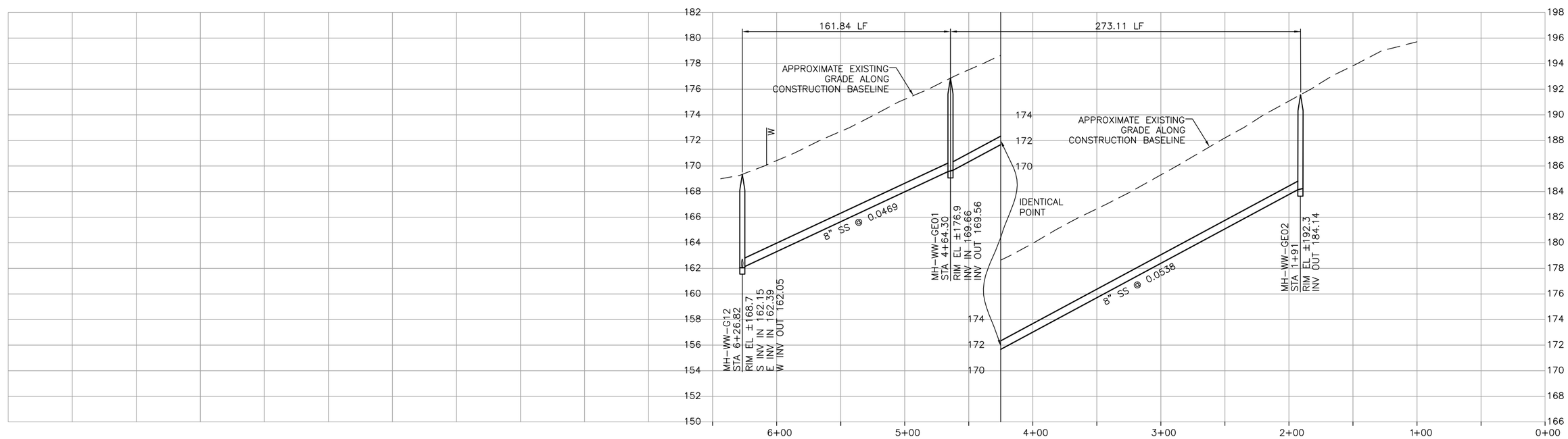

CONSTRUCTION BASELINE STATION

PROFILE OF CLARANITA AVENUE

DIGALERT
DIAL TOLL FREE
1-800-642-2444
AT LEAST TWO DAYS BEFORE YOU DIG
UNDERGROUND SERVICE ALERT OF NORTHERN CALIFORNIA

REGISTERED PROFESSIONAL ENGINEER
MICHAEL H. MAYER
No. C42546
Exp. 3-31-04
CIVIL
STATE OF CALIFORNIA

REV	DATE	BY	DESCRIPTION

SCALE
HORZ: 1"=40'
VERT: 1"=4'

WARNING
0 1/2 1
IF THIS BAR DOES NOT MEASURE 1" THEN DRAWING IS NOT TO SCALE

DESIGNED MDT/MHM
DRAWN JCM
CHECKED GEH

SUBMITTED BY
JOHN A. BERGEN — C31069 — LICENSE NO. — 2-16-2004 — DATE
STEVEN J. HYLAND — C23892 — LICENSE NO. — 2-16-2004 — DATE

LOS OSOS
COMMUNITY SERVICES DISTRICT

MWH
Walnut Creek, California

RMC
Raines, Melton & Carella, Inc.

LOS OSOS WASTEWATER PROJECT
PLAN AND PROFILE
CLARANITA AVENUE
STA 6+26.82 TO STA 1+91

SHEET
C-PP-138

C:\Program Files\ACAD2000\CADRMC\ALOSOSOS\C-PP-138.dwg, Layout1, Feb 05, 2004 8:59am, John

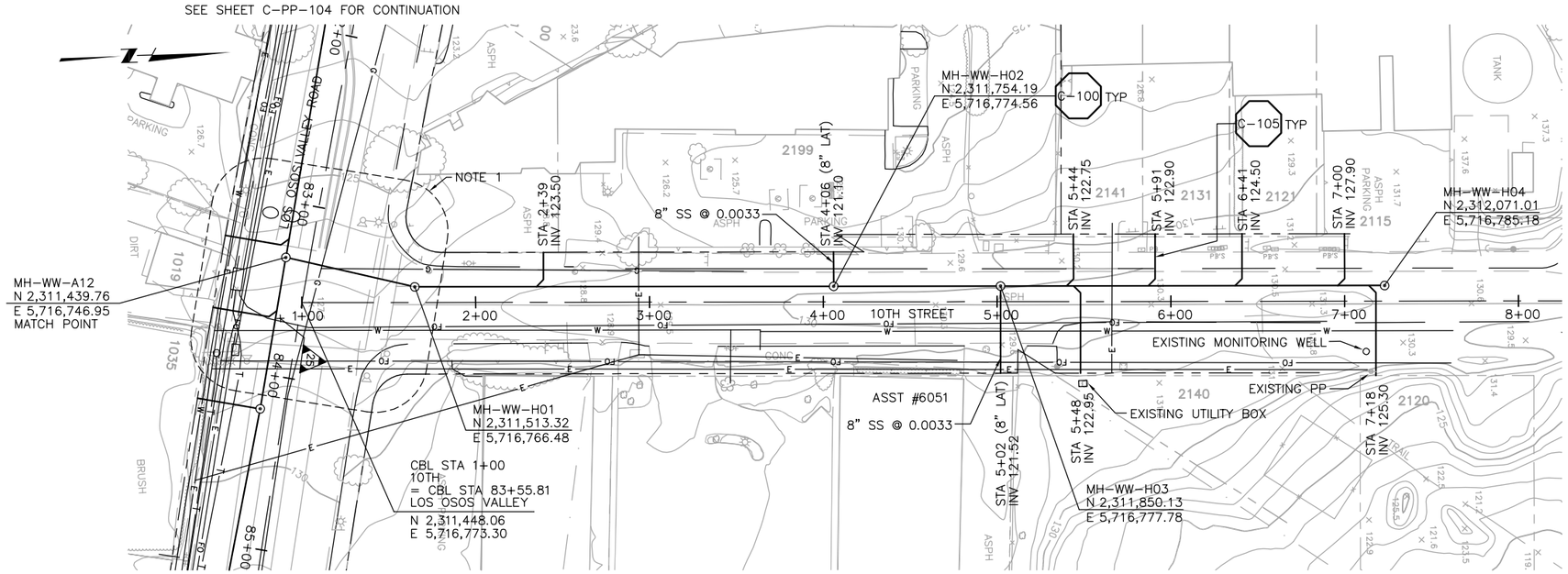

PLAN ON 10TH STREET

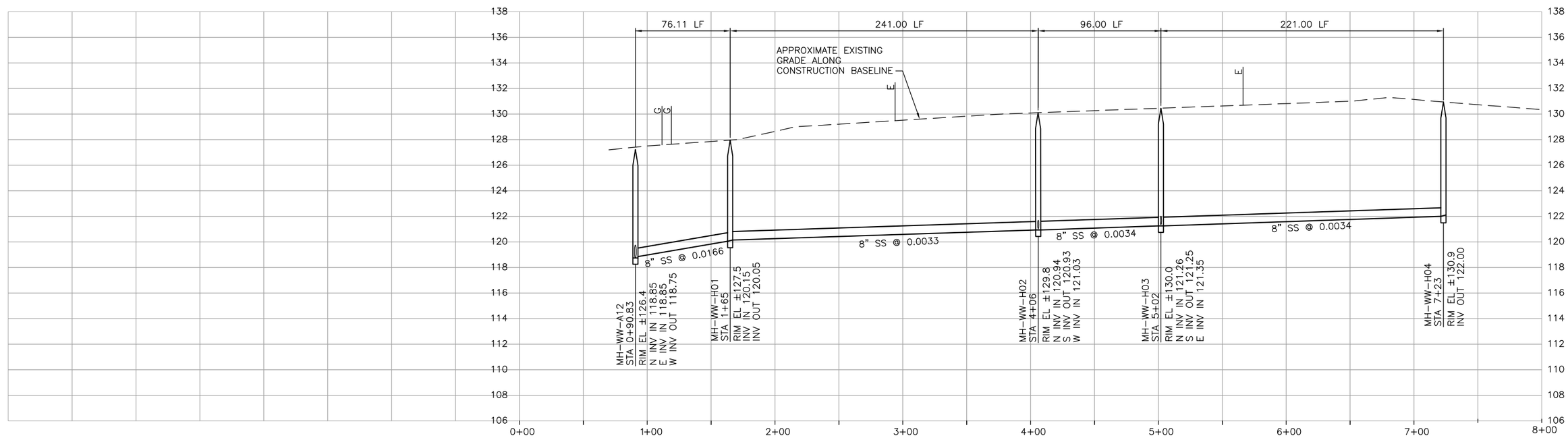

PROFILE ON 10TH STREET

CONSTRUCTION BASELINE STATION

NOTES:

1. CONTRACTOR SHALL REPAIR EXISTING TRAFFIC CONTROL SYSTEM, INCLUDING INSTALLING NEW DETECTOR LOOPS, WHERE CONSTRUCTION RESULTS IN DAMAGE TO EXISTING SYSTEM. CONTRACTOR SHALL COORDINATE REPAIRS WITH COUNTY OF SAN LUIS OBISPO.

DIGALERT — DIAL TOLL FREE 1-800-642-2444 — AT LEAST TWO DAYS BEFORE YOU DIG — UNDERGROUND SERVICE ALERT OF NORTHERN CALIFORNIA

REGISTERED PROFESSIONAL ENGINEER — MICHAEL H. MARTIN — No. C42546 — Exp. 3-31-04 — CIVIL — STATE OF CALIFORNIA

REV	DATE	BY	DESCRIPTION

SCALE: HORZ: 1"=40' VERT: 1"=4'

WARNING: 0 1/2 1 — IF THIS BAR DOES NOT MEASURE 1" THEN DRAWING IS NOT TO SCALE

DESIGNED MDT/MHM
DRAWN JCM
CHECKED GEH

SUBMITTED BY
JOHN A. BERGEN — C31069 — LICENSE NO. — 2-16-2004 — DATE
STEVEN J. HYLAND — C23892 — LICENSE NO. — 2-16-2004 — DATE

LOS OSOS COMMUNITY SERVICES DISTRICT

MWH Walnut Creek, California

RMC Raines, Melton & Carella, Inc.

LOS OSOS WASTEWATER PROJECT
PLAN AND PROFILE
10TH STREET
STA 0+90.83 TO STA 7+23

SHEET C-PP-139

C:\Program Files\ACAD2000\CADRMC\ALOSOSOS\C-PP-139.dwg, Layout1, Feb 05, 2004 8:59am, John

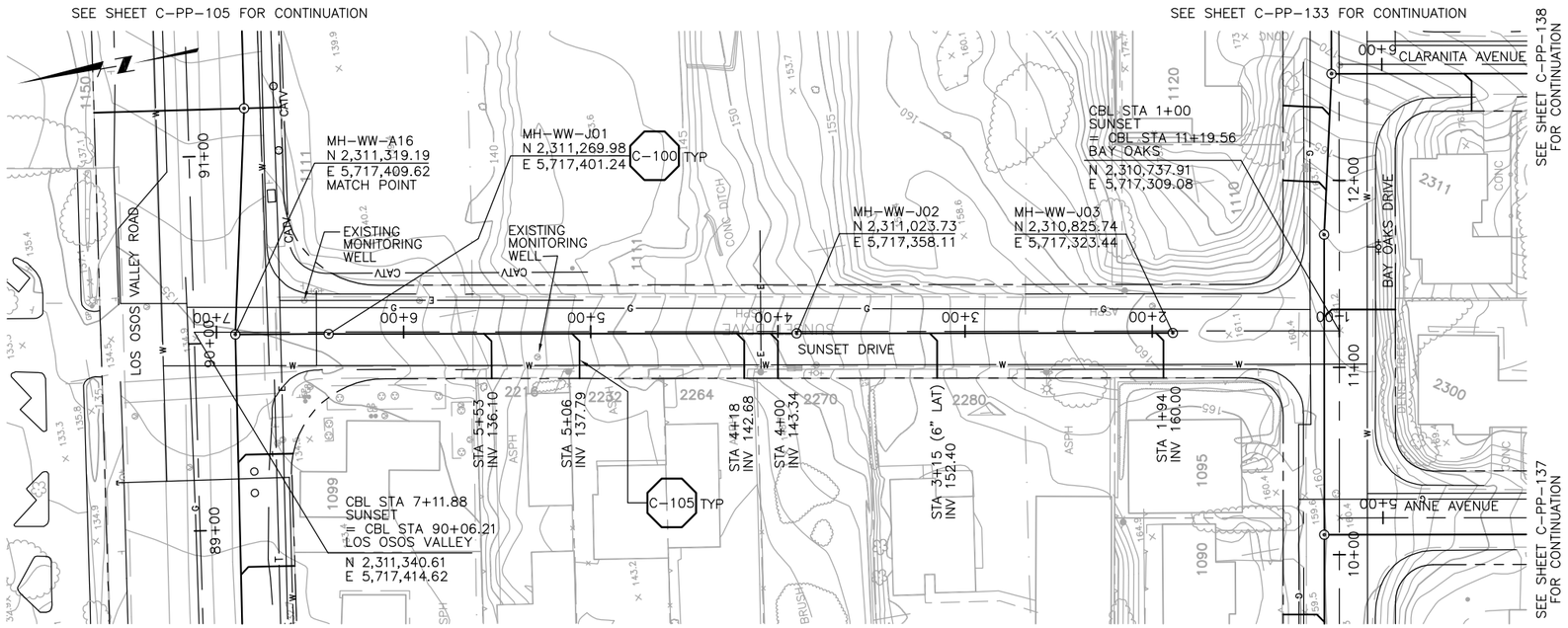

PLAN ON SUNSET DRIVE

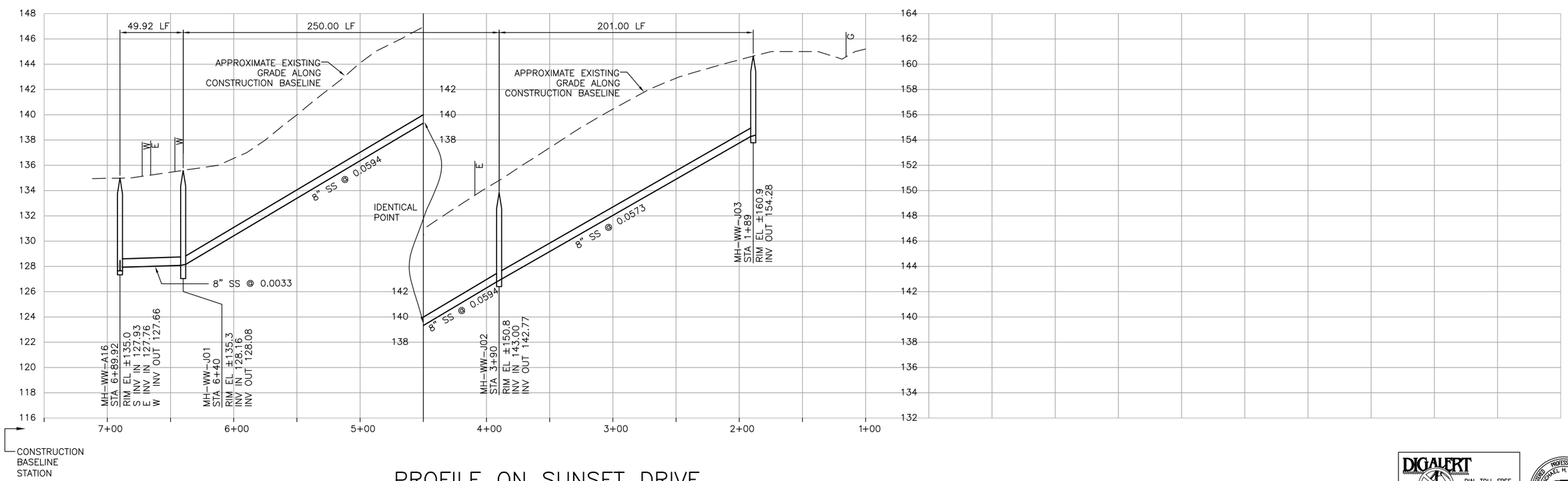

PROFILE ON SUNSET DRIVE

DIGALERT
DIAL TOLL FREE
1-800-642-2444
AT LEAST TWO DAYS BEFORE YOU DIG
UNDERGROUND SERVICE ALERT OF NORTHERN CALIFORNIA

REGISTERED PROFESSIONAL ENGINEER
No. C42546
Exp. 3-31-04
CIVIL
STATE OF CALIFORNIA

REV	DATE	BY	DESCRIPTION

SCALE
HORZ: 1"=40'
VERT: 1"=4'

WARNING
0 1/2 1
IF THIS BAR DOES NOT MEASURE 1" THEN DRAWING IS NOT TO SCALE

DESIGNED MDT/MHM
DRAWN JCM
CHECKED GEH

SUBMITTED BY
JOHN A. BERGEN — C31069 LICENSE NO. — 2-16-2004 DATE
STEVEN J. HYLAND — C23892 LICENSE NO. — 2-16-2004 DATE

LOS OSOS
COMMUNITY SERVICES DISTRICT

MWH
Walnut Creek, California

RMC
Raines, Melton & Carella, Inc.

LOS OSOS WASTEWATER PROJECT
PLAN AND PROFILE
SUNSET DRIVE
STA 6+89.92 TO STA 1+89

SHEET
C-PP-140

C:\Program Files\ACAD2000\CADRMC\ALOSOSOS\C-PP-140.dwg, Layout1, Feb 05, 2004 9:00am, John

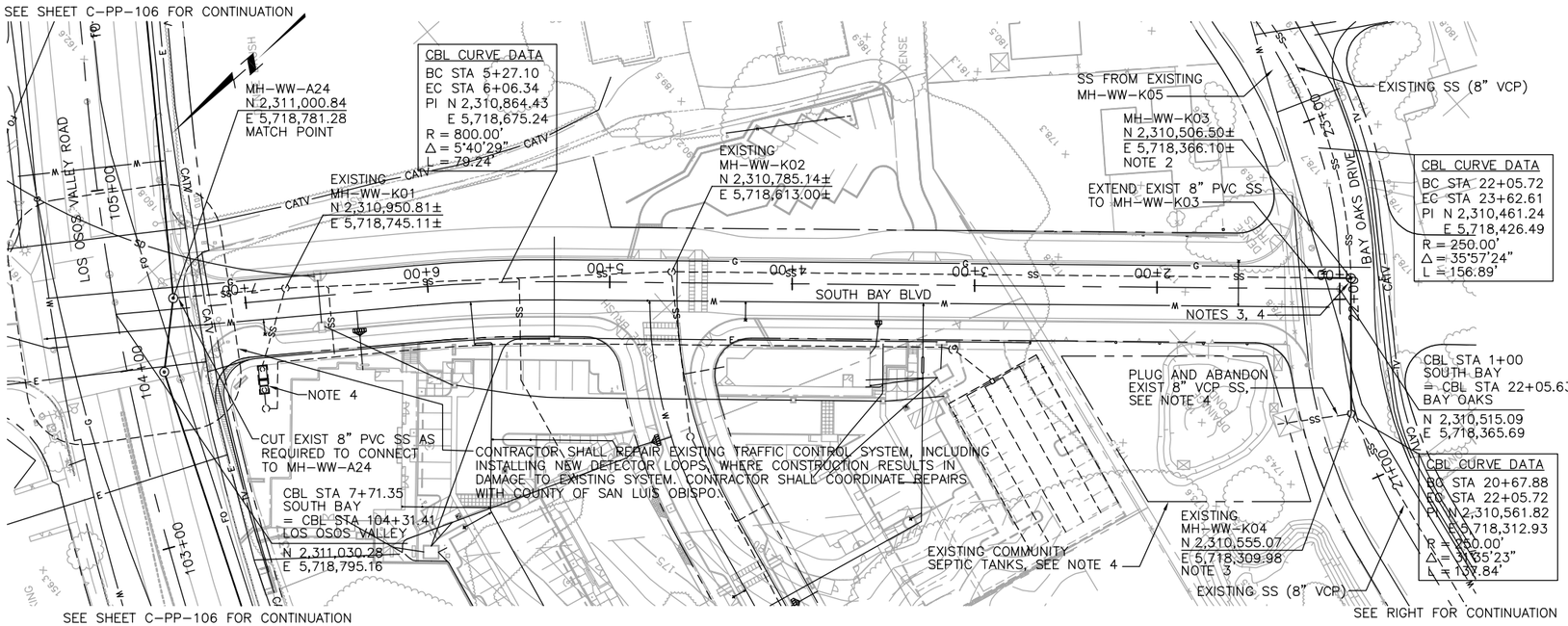

PLAN ON SOUTH BAY BOULEVARD AND BAY OAKS DRIVE

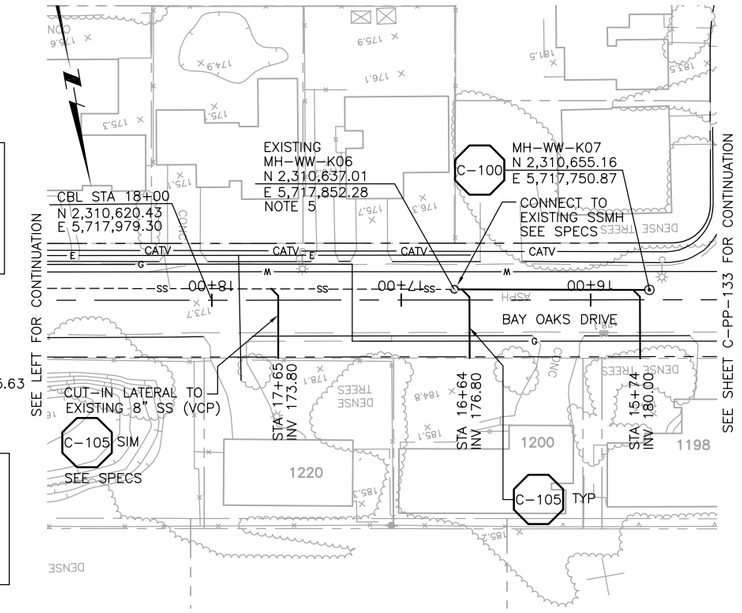

PLAN ON BAY OAKS DRIVE

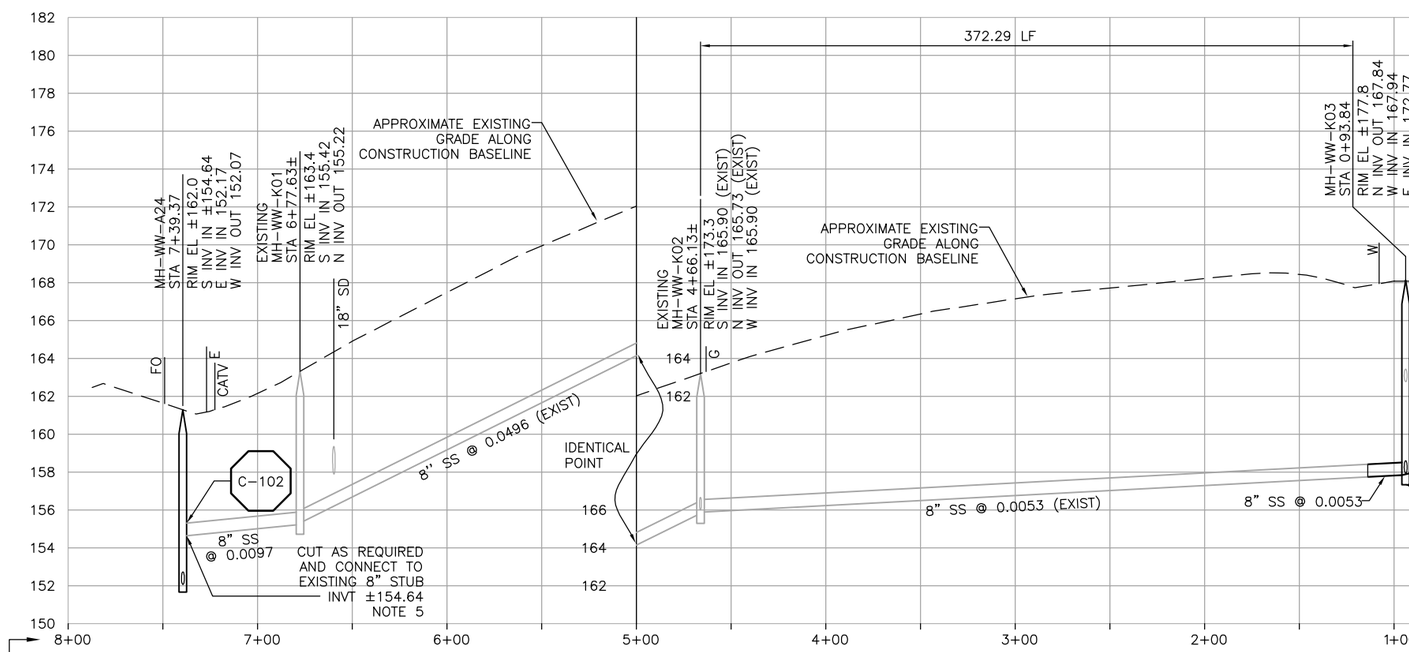

PROFILE ON SOUTH BAY BOULEVARD

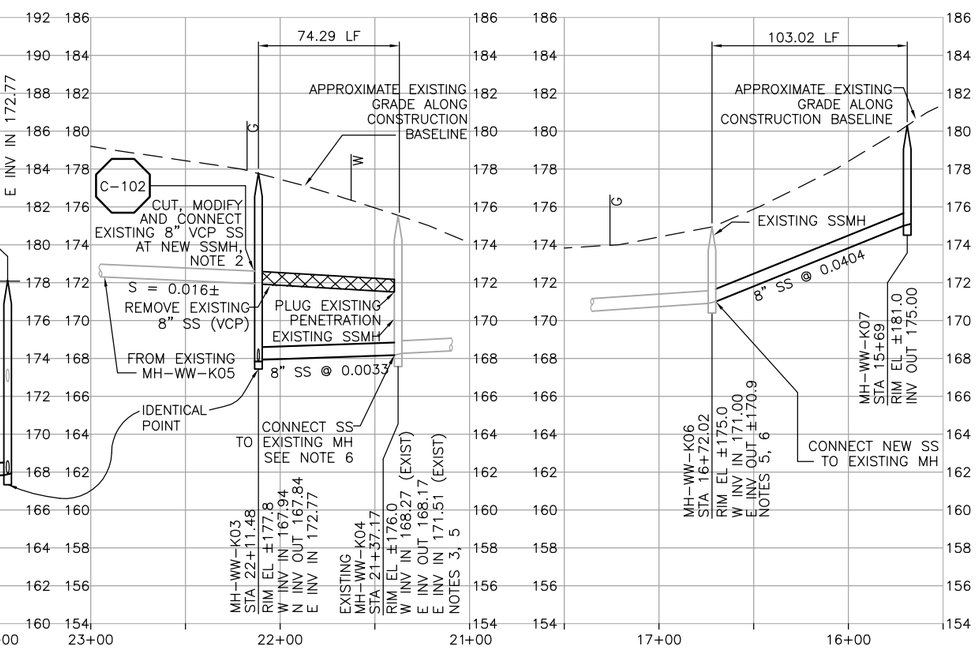

PROFILES ON BAY OAKS DRIVE

NOTES:

1. CONTRACTOR SHALL NOTE THAT AERIAL PHOTOGRAPHY PREDATES RECENT DEVELOPMENT OF SOUTH BAY BLVD EXTENSION FROM LOS OSOS VALLEY ROAD TO BAY OAKS DRIVE.
2. MH-WW-K03 SHALL BE INSTALLED OVER EXISTING 8" SS. CONTRACTOR SHALL MAINTAIN EXISTING SEWER PROFILE TO EAST. CONTRACTOR SHALL CUT AND MODIFY EXISTING 8" VCP SS TO PENETRATE MH-WW-K03. SEE SPECS.
3. CONTRACTOR SHALL REMOVE EXISTING SEWER TO WEST AND INSTALL SEWER FROM MH-WW-K04 DRAINING TO MH-WW-K03.
4. CONTRACTOR SHALL NOT DIVERT SEWAGE FLOWS INTO DOWNSTREAM SEWER WITHOUT WRITTEN PERMISSION FROM LOCSD. CONTRACTOR SHALL TEMPORARILY BYPASS INCOMING WASTEWATER TO COMMUNITY SEPTIC TANK AT BAY OAKS DRIVE, AT SOUTH BAY BLVD, AND AT LOS OSOS VALLEY ROAD. COORDINATE BYPASS WITH LOCSD.
5. CONTRACTOR SHALL VERIFY LOCATION AND DEPTH OF EXISTING SEWER FACILITIES PRIOR TO BEGINNING WORK.
6. CONTRACTOR SHALL CORE DRILL AND SEAL NEW SEWER PENETRATION PER SPECS.

DIGALERT — DIAL TOLL FREE 1-800-642-2444 AT LEAST TWO DAYS BEFORE YOU DIG — UNDERGROUND SERVICE ALERT OF NORTHERN CALIFORNIA

REGISTERED PROFESSIONAL ENGINEER — MICHAEL H. MARCHUS — No. C42546 — Exp. 3-31-04 — CIVIL — STATE OF CALIFORNIA

REV	DATE	BY	DESCRIPTION

SCALE: HORZ: 1"=40' VERT: 1"=4'

WARNING: 0 1/2 1 — IF THIS BAR DOES NOT MEASURE 1" THEN DRAWING IS NOT TO SCALE

DESIGNED MDT/MHM
DRAWN JCM
CHECKED GEH

SUBMITTED BY
JOHN A. BERGEN — C31069 LICENSE NO. — 2-16-2004 DATE
STEVEN J. HYLAND — C23892 LICENSE NO. — 2-16-2004 DATE

LOS OSOS COMMUNITY SERVICES DISTRICT

MWH Walnut Creek, California

RMC Raines, Melton & Carella, Inc.

LOS OSOS WASTEWATER PROJECT
PLAN AND PROFILE
SOUTH BAY – 7+39.37 TO 0+93.84
BAY OAKS – 22+11.48 TO 15+69

SHEET C-PP-141

C:\Program Files\ACAD2000\CADRMC\ALOSOSOS\C-PP-141.dwg, Layout1, Feb 05, 2004 9:01am, John

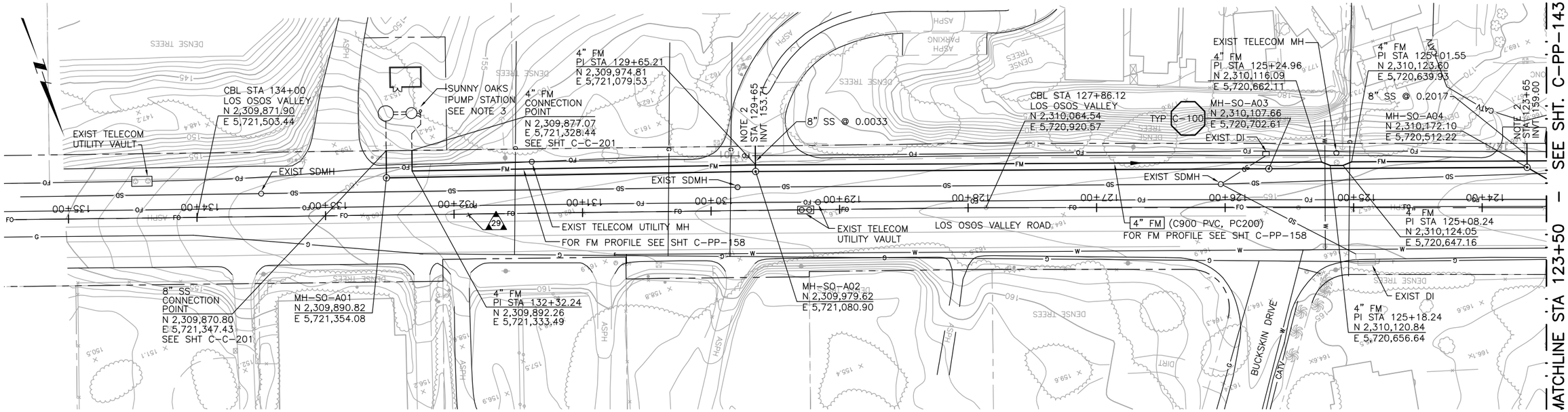

PLAN ON LOS OSOS VALLEY ROAD

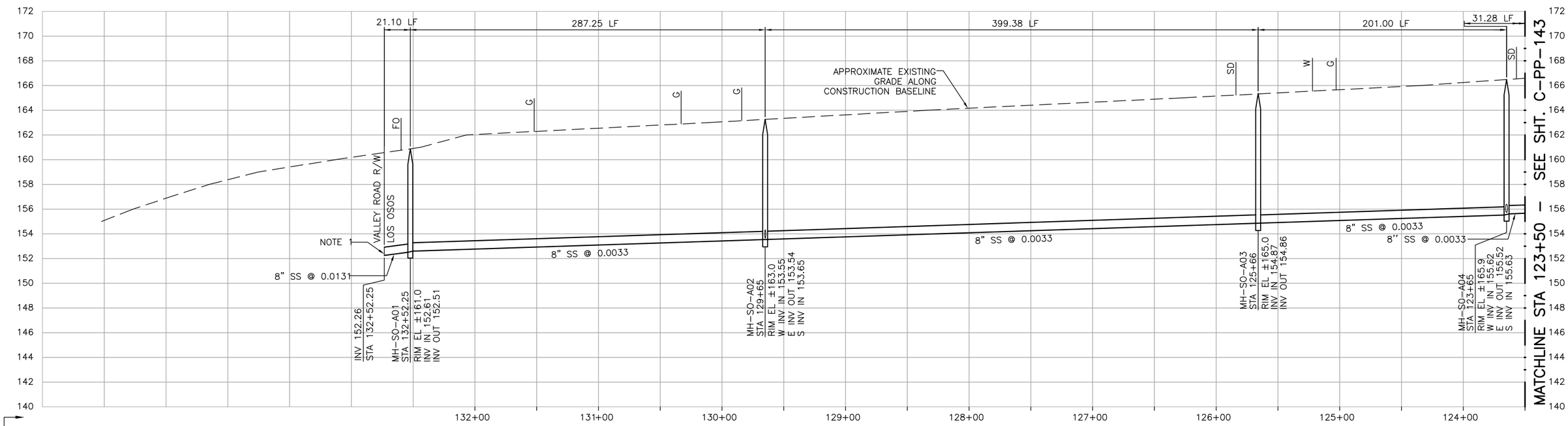

NOTES:

1. CONTRACTOR SHALL CONNECT TO SUNNY OAKS PUMP STATION, VERIFY CONNECTION LOCATION AND DEPTH PRIOR TO BEGINNING WORK.
2. CONTRACTOR SHALL CAP END OF STUB SS AND STAKE FOR FUTURE CONNECTION.
3. SUNNY OAKS TRAILER PARK SEWER CONNECTION IS DIRECT TO PUMP STATION. SEE PUMP STATION CIVIL DRAWING.

PROFILE ON LOS OSOS VALLEY ROAD

DIGALERT — DIAL TOLL FREE 1-800-642-2444 — AT LEAST TWO DAYS BEFORE YOU DIG — UNDERGROUND SERVICE ALERT OF NORTHERN CALIFORNIA

REGISTERED PROFESSIONAL ENGINEER — MICHAEL H. MARCHUS — No. C42546 — Exp. 3-31-04 — CIVIL — STATE OF CALIFORNIA

REV	DATE	BY	DESCRIPTION

SCALE: HORZ: 1"=40' VERT: 1"=4'

WARNING: 0 1/2 1 — IF THIS BAR DOES NOT MEASURE 1" THEN DRAWING IS NOT TO SCALE

DESIGNED MDT/MHM
DRAWN JCM
CHECKED GEH

SUBMITTED BY
JOHN A. BERGEN — C31069 LICENSE NO. — 2-16-2004 DATE
STEVEN J. HYLAND — C23892 LICENSE NO. — 2-16-2004 DATE

LOS OSOS COMMUNITY SERVICES DISTRICT

MWH Walnut Creek, California

RMC Raines, Melton & Carella, Inc.

LOS OSOS WASTEWATER PROJECT
PLAN AND PROFILE
LOS OSOS VALLEY ROAD
STA 132+52.25 TO STA 123+50

SHEET C-PP-142

C:\Program Files\ACAD2000\CADRMC\ALOSOSOS\C-PP-142.dwg, Layout1, Feb 05, 2004 9:02am, John

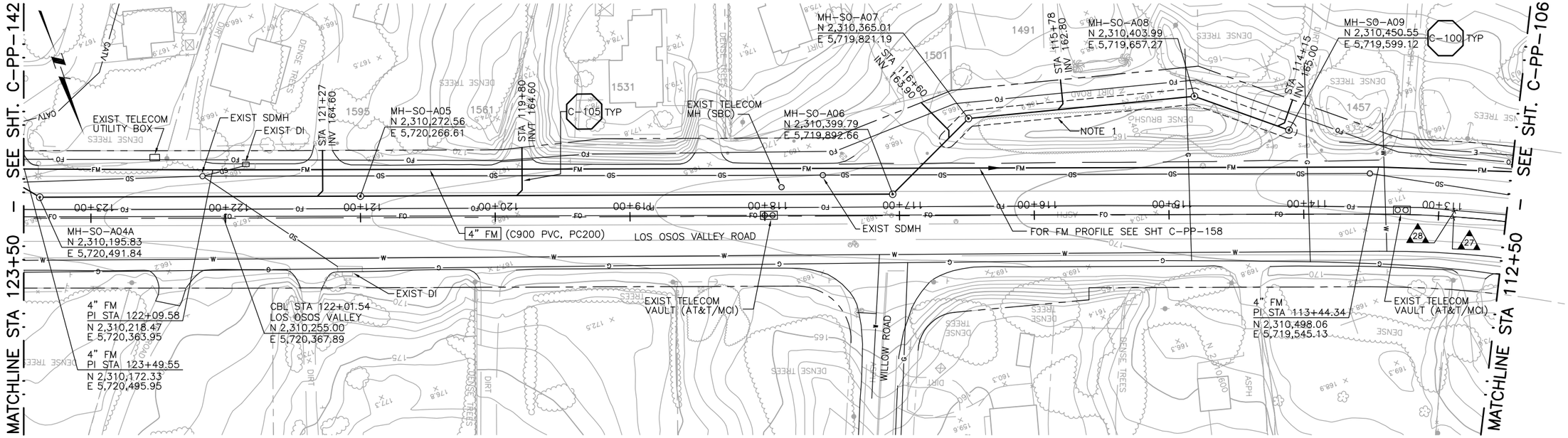

PLAN ON LOS OSOS VALLEY ROAD

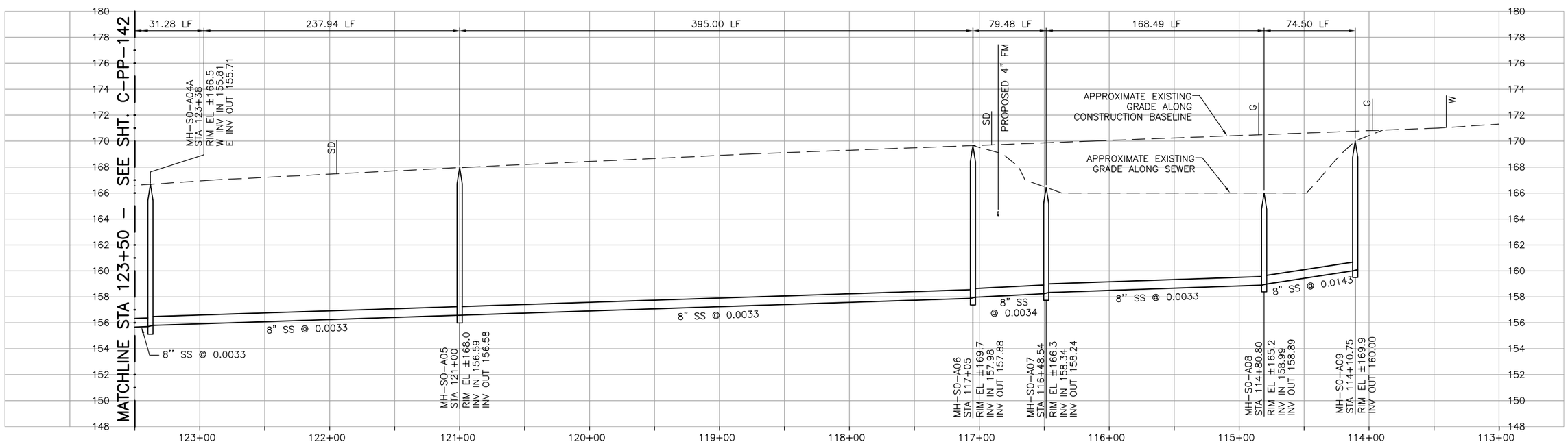

CONSTRUCTION BASELINE STATION

NOTES:
1. CONTRACTOR SHALL TEMPORARILY RELOCATE EXISTING SOIL STOCKPILES, EQUIPMENT AND DEBRIS TO CONSTRUCT SEWER. REPLACE UPON COMPLETION OF WORK.

PROFILE ON LOS OSOS VALLEY ROAD

DIGALERT DIAL TOLL FREE 1-800-642-2444 AT LEAST TWO DAYS BEFORE YOU DIG UNDERGROUND SERVICE ALERT OF NORTHERN CALIFORNIA

REGISTERED PROFESSIONAL ENGINEER No. C42546 Exp. 3-31-04 CIVIL STATE OF CALIFORNIA

REV	DATE	BY	DESCRIPTION

SCALE: HORZ: 1"=40' VERT: 1"=4'

WARNING: 0 1/2 1 IF THIS BAR DOES NOT MEASURE 1" THEN DRAWING IS NOT TO SCALE

DESIGNED MDT/MHM
DRAWN JCM
CHECKED GEH

SUBMITTED BY
JOHN A. BERGEN — C31069 LICENSE NO. — 2-16-2004 DATE
STEVEN J. HYLAND — C23892 LICENSE NO. — 2-16-2004 DATE

LOS OSOS COMMUNITY SERVICES DISTRICT

MWH Walnut Creek, California

RMC Raines, Melton & Carella, Inc.

LOS OSOS WASTEWATER PROJECT
PLAN AND PROFILE
LOS OSOS VALLEY ROAD
STA 123+50 TO STA 114+10.75

SHEET C-PP-143

C:\Program Files\ACAD2000\CADRMC\ALOSOSOS\C-PP-143.dwg, Layout1, Feb 05, 2004 9:03am, John

SEE SHEET C-PP-145 FOR CONTINUATION

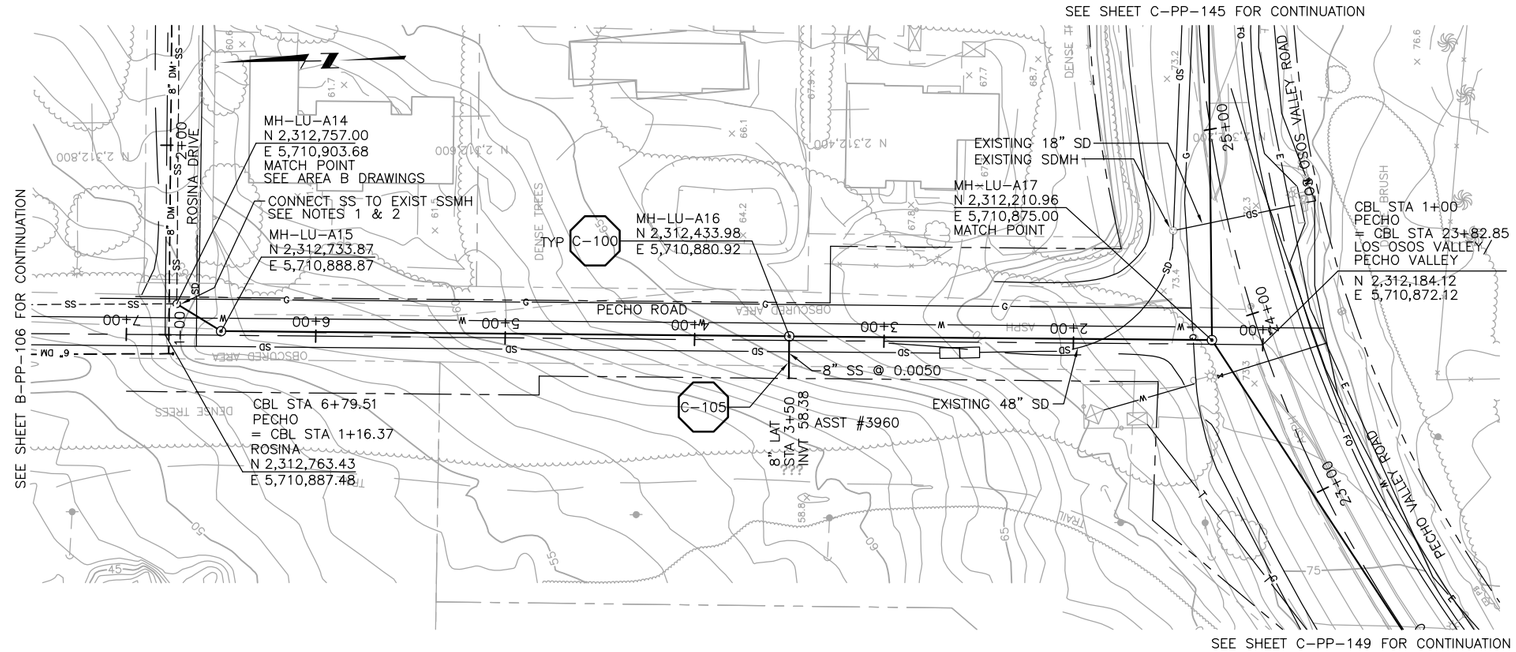

SEE SHEET C-PP-149 FOR CONTINUATION

PLAN ON PECHO ROAD

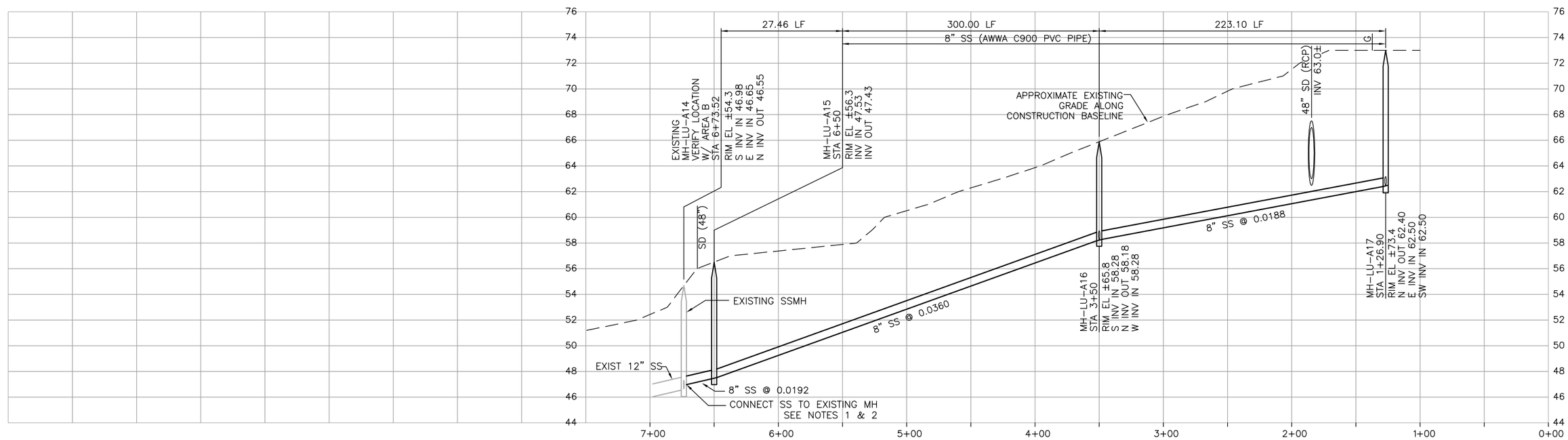

CONSTRUCTION BASELINE STATION

NOTES:
1. CONTRACTOR SHALL VERIFY LOCATION AND DEPTH OF EXISTING SEWER FACILITIES PRIOR TO BEGINNING WORK.
2. CONTRACTOR SHALL CORE DRILL AND SEAL NEW SEWER PENETRATION PER SPECS.

PROFILE ON PECHO ROAD

DIGALERT
DIAL TOLL FREE
1-800-642-2444
AT LEAST TWO DAYS BEFORE YOU DIG
UNDERGROUND SERVICE ALERT OF NORTHERN CALIFORNIA

REGISTERED PROFESSIONAL ENGINEER
No. C42546
Exp. 3-31-04
CIVIL
STATE OF CALIFORNIA

REV	DATE	BY	DESCRIPTION

SCALE
HORZ: 1"=40'
VERT: 1"=4'

WARNING
0 1/2 1
IF THIS BAR DOES NOT MEASURE 1" THEN DRAWING IS NOT TO SCALE

DESIGNED MDT/MHM
DRAWN JCM
CHECKED GEH

SUBMITTED BY
JOHN A. BERGEN — C31069 LICENSE NO. — 2-16-2004 DATE
STEVEN J. HYLAND — C23892 LICENSE NO. — 2-16-2004 DATE

LOS OSOS
COMMUNITY SERVICES DISTRICT

MWH
Walnut Creek, California

RMC
Raines, Melton & Carella, Inc.

LOS OSOS WASTEWATER PROJECT
PLAN AND PROFILE
PECHO ROAD
STA 6+73.52 TO STA 1+27.03

SHEET
C-PP-144

C:\Program Files\ACAD2000\CADRMC\ALOSOSOS\C-PP-144.dwg, Layout1, Feb 05, 2004 10:34am, John

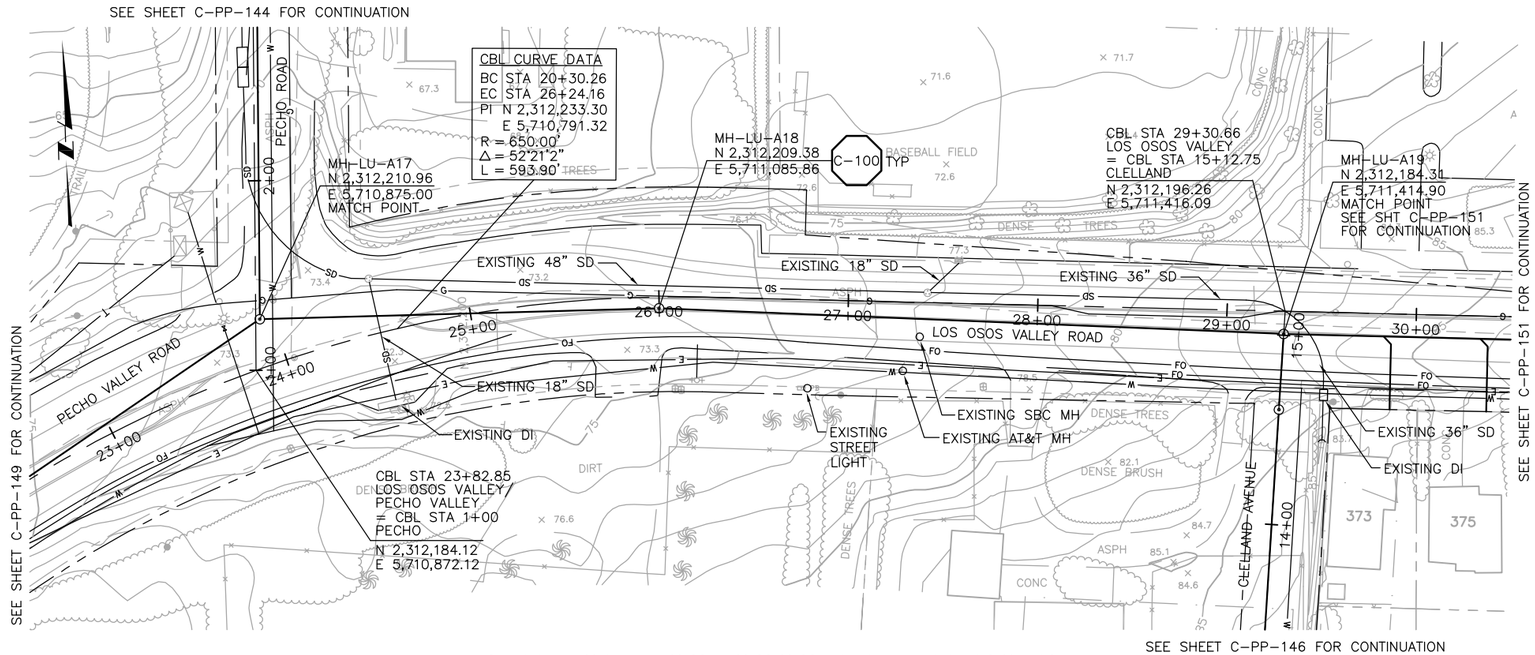

PLAN ON LOS OSOS VALLEY ROAD

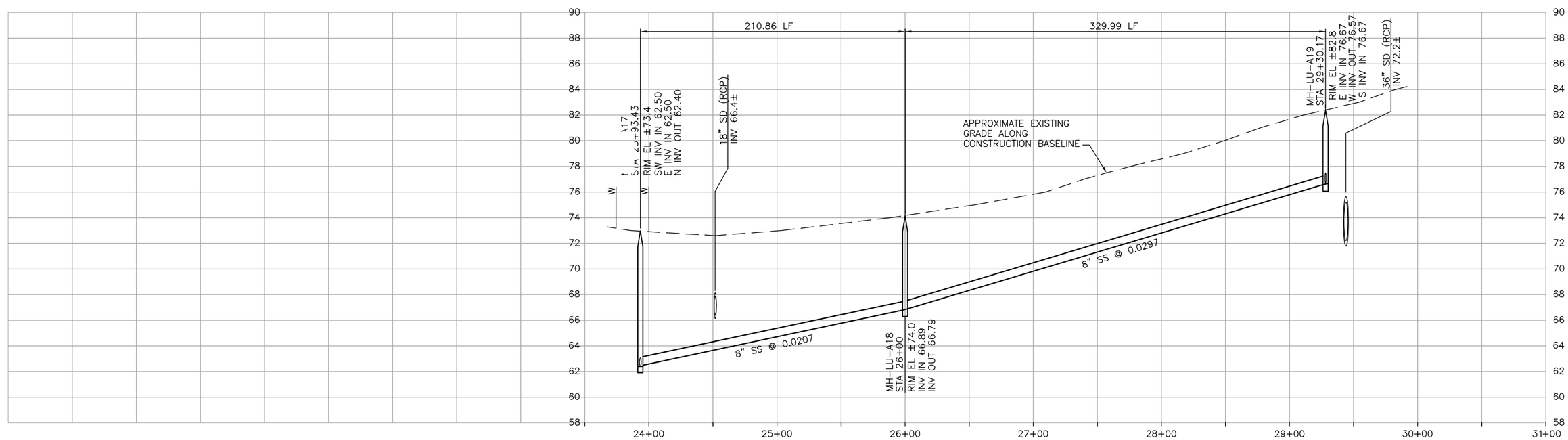

CONSTRUCTION
BASELINE
STATION

PROFILE ON LOS OSOS VALLEY ROAD

DIGALERT
DIAL TOLL FREE
1-800-642-2444
AT LEAST TWO DAYS BEFORE YOU DIG
UNDERGROUND SERVICE ALERT OF NORTHERN CALIFORNIA

REGISTERED PROFESSIONAL ENGINEER
No. C42546
Exp. 3-31-04
CIVIL
STATE OF CALIFORNIA

REV	DATE	BY	DESCRIPTION

SCALE
HORZ: 1"=40'
VERT: 1"=4'

WARNING
0 1/2 1
IF THIS BAR DOES NOT MEASURE 1" THEN DRAWING IS NOT TO SCALE

DESIGNED MDT/MHM
DRAWN JCM
CHECKED GEH

SUBMITTED BY
JOHN A. BERGEN — C31069 LICENSE NO. — 2-16-2004 DATE
STEVEN J. HYLAND — C23892 LICENSE NO. — 2-16-2004 DATE

LOS OSOS
COMMUNITY SERVICES DISTRICT

MWH
Walnut Creek, California

RMC
Raines, Melton & Carella, Inc.

LOS OSOS WASTEWATER PROJECT
PLAN AND PROFILE
LOS OSOS VALLEY ROAD
STA 23+99.73 TO STA 29+30.17

SHEET
C-PP-145

C:\Program Files\ACAD2000\C:\ADRMC\ALOSOSOS\C-PP-145.dwg, Layout1, Feb 05, 2004 9:05am, John

SEE SHEET C-PP-151 FOR CONTINUATION
SEE SHEET C-PP-152 FOR CONTINUATION
SEE SHEET C-PP-154 FOR CONTINUATION
SEE SHEET C-PP-155 FOR CONTINUATION
SEE SHEET C-PP-157 FOR CONTINUATION

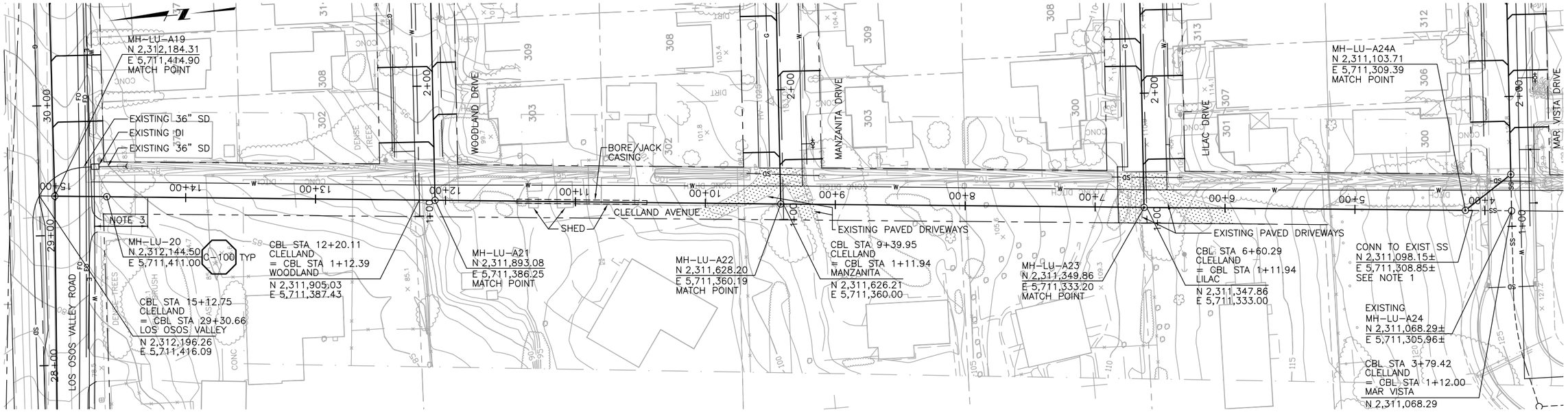

SEE SHEET C-PP-145 FOR CONTINUATION

PLAN ON CLELLAND AVENUE

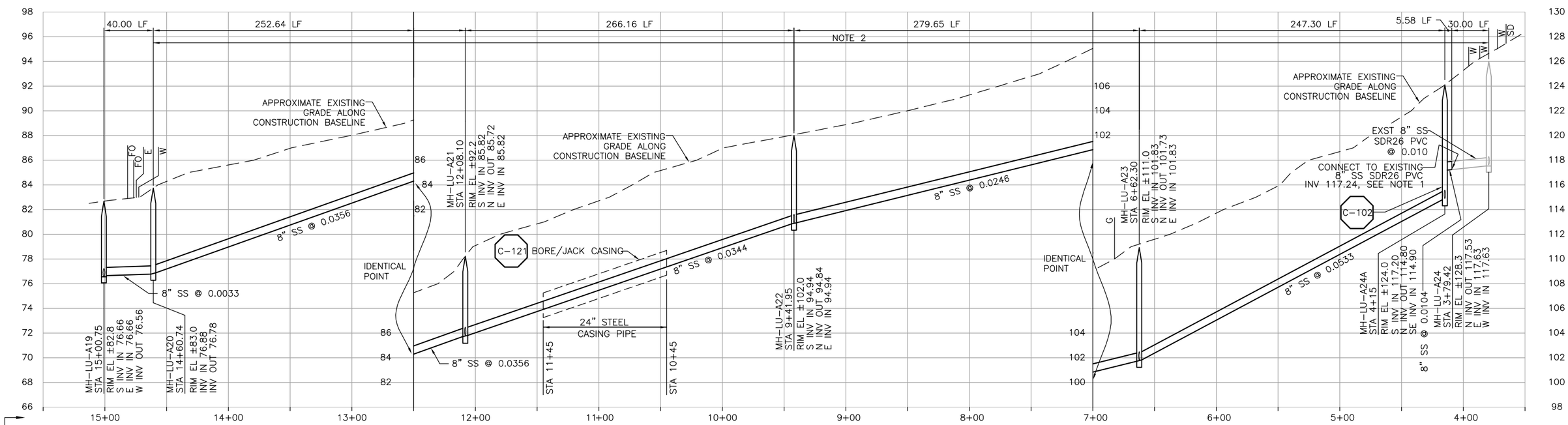

CONSTRUCTION BASELINE STATION

NOTES:

1. CONTRACTOR SHALL VERIFY LOCATION AND DEPTH OF EXISTING SS CONNECTION POINT PRIOR TO BEGINNING WORK.
2. CONTRACTOR SHALL RESTORE EXISTING DRIVEWAYS, FENCES, AND IRRIGATION SYSTEMS DAMAGED DURING CONSTRUCTION.
3. CONTRACTOR SHALL PRUNE EXISTING TREES AS NEEDED PRIOR TO CONSTRUCTION. ALL PRUNING SHALL BE SUPERVISED BY CERTIFIED ARBORIST AT CONTRACTOR'S EXPENSE.

NOTES:

4. CONTRACTOR SHALL APPLY EROSION CONTROL MEASURES ON ALL DISTURBED GROUND SURFACES SUBJECT TO EROSION. SEE SPECS.

PROFILE ON CLELLAND AVENUE

DIGALERT — DIAL TOLL FREE 1-800-642-2444 AT LEAST TWO DAYS BEFORE YOU DIG — UNDERGROUND SERVICE ALERT OF NORTHERN CALIFORNIA

REGISTERED PROFESSIONAL ENGINEER — MICHAEL H. MAY — No. C42546 — Exp. 3-31-04 — CIVIL — STATE OF CALIFORNIA

REV	DATE	BY	DESCRIPTION

SCALE: HORZ: 1"=40' VERT: 1"=4'

WARNING: 0 1/2 1 — IF THIS BAR DOES NOT MEASURE 1" THEN DRAWING IS NOT TO SCALE

DESIGNED MDT/MHM
DRAWN JCM
CHECKED GEH

SUBMITTED BY
JOHN A. BERGEN — C31069 — 2-16-2004
STEVEN J. HYLAND — C23892 — 2-16-2004

LOS OSOS COMMUNITY SERVICES DISTRICT

MWH Walnut Creek, California

RMC Raines, Melton & Carella, Inc.

LOS OSOS WASTEWATER PROJECT
PLAN AND PROFILE
CLELLAND AVENUE
STA 15+00.75 TO STA 3+79.42

SHEET C-PP-146

C:\Program Files\ACAD2000\CADRMC\LOSOSOS\C-PP-146.dwg, Layout1, Feb 05, 2004 9:06am, John

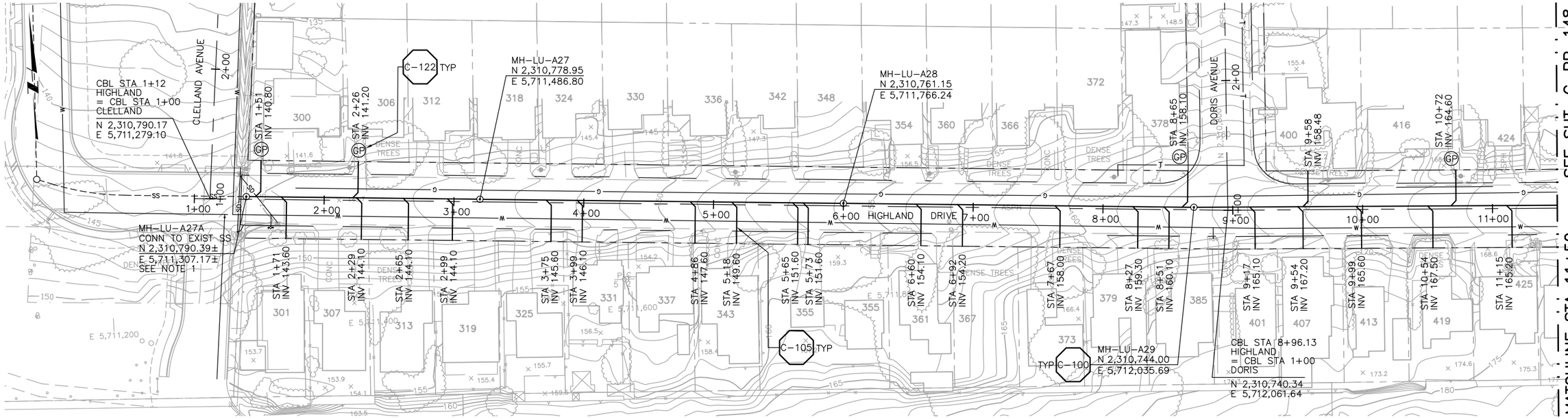

PLAN ON HIGHLAND DRIVE

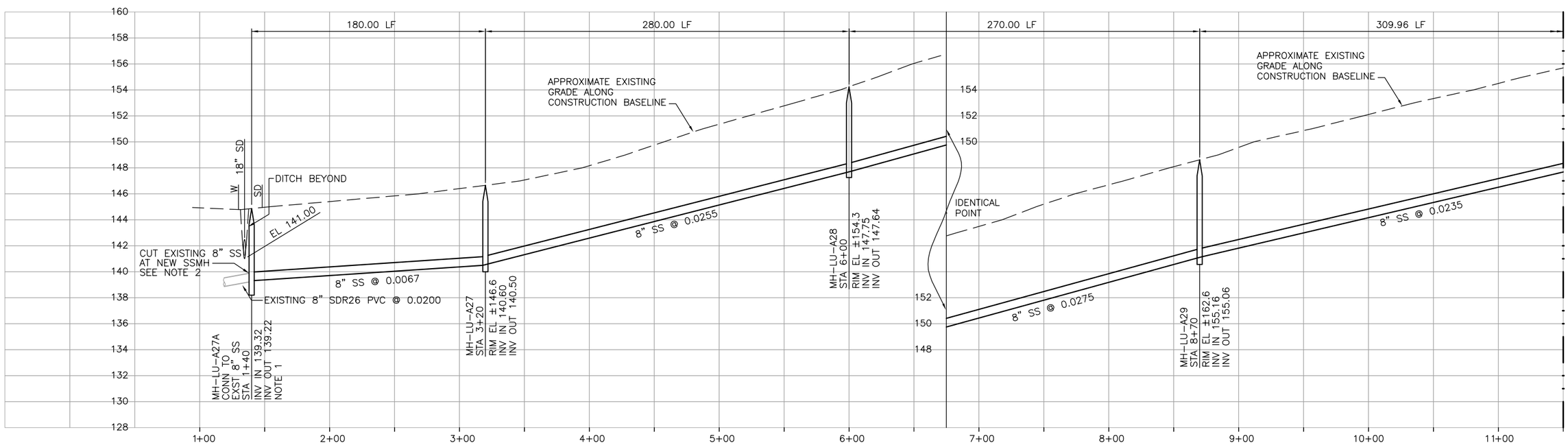

CONSTRUCTION BASELINE STATION

NOTES:

1. CONTRACTOR SHALL VERIFY LOCATION AND DEPTH OF EXISTING SS CONNECTION POINT PRIOR TO BEGINNING WORK.
2. MH-LU-A27A SHALL BE INSTALLED OVER EXISTING 8" SS.

PROFILE ON HIGHLAND DRIVE

DIGALERT — DIAL TOLL FREE 1-800-642-2444 AT LEAST TWO DAYS BEFORE YOU DIG — UNDERGROUND SERVICE ALERT OF NORTHERN CALIFORNIA

REGISTERED PROFESSIONAL ENGINEER — MICHAEL H. MAYS — No. C42546 — Exp. 3-31-04 — CIVIL — STATE OF CALIFORNIA

REV	DATE	BY	DESCRIPTION

SCALE: HORZ: 1"=40' VERT: 1"=4'

WARNING: 0 1/2 1 — IF THIS BAR DOES NOT MEASURE 1" THEN DRAWING IS NOT TO SCALE

DESIGNED MDT/MHM
DRAWN JCM
CHECKED GEH

SUBMITTED BY
JOHN A. BERGEN — C31069 LICENSE NO. — 2-16-2004 DATE
STEVEN J. HYLAND — C23892 LICENSE NO. — 2-16-2004 DATE

LOS OSOS COMMUNITY SERVICES DISTRICT

MWH Walnut Creek, California

RMC Raines, Melton & Carella, Inc.

LOS OSOS WASTEWATER PROJECT
PLAN AND PROFILE
HIGHLAND DRIVE
STA 1+40 TO STA 11+50

SHEET C-PP-147

C:\Program Files\ACAD2000\CADRMC\ALOSOS05\C-PP-147.dwg, Layout1, Feb 05, 2004 9:07am, John

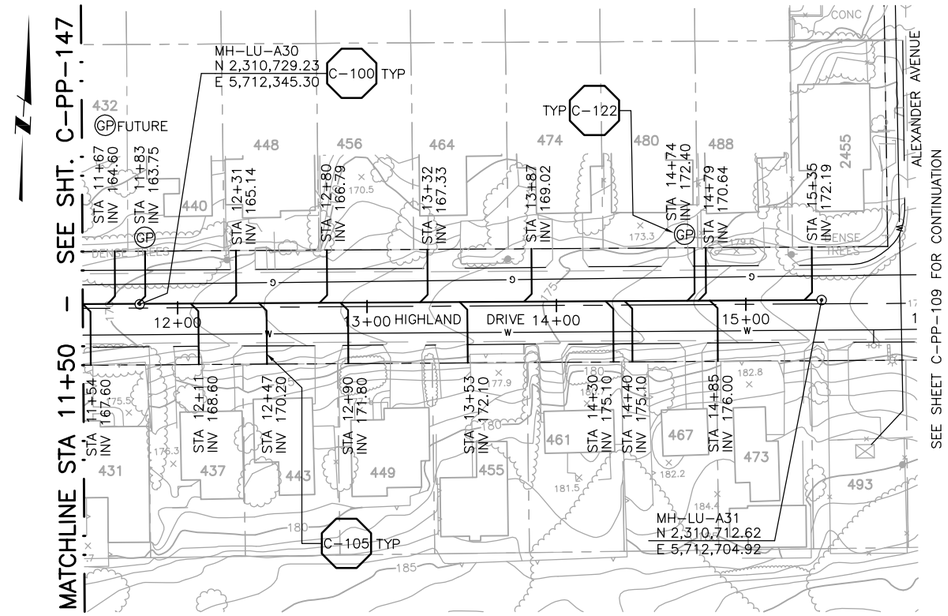

PLAN ON HIGHLAND DRIVE

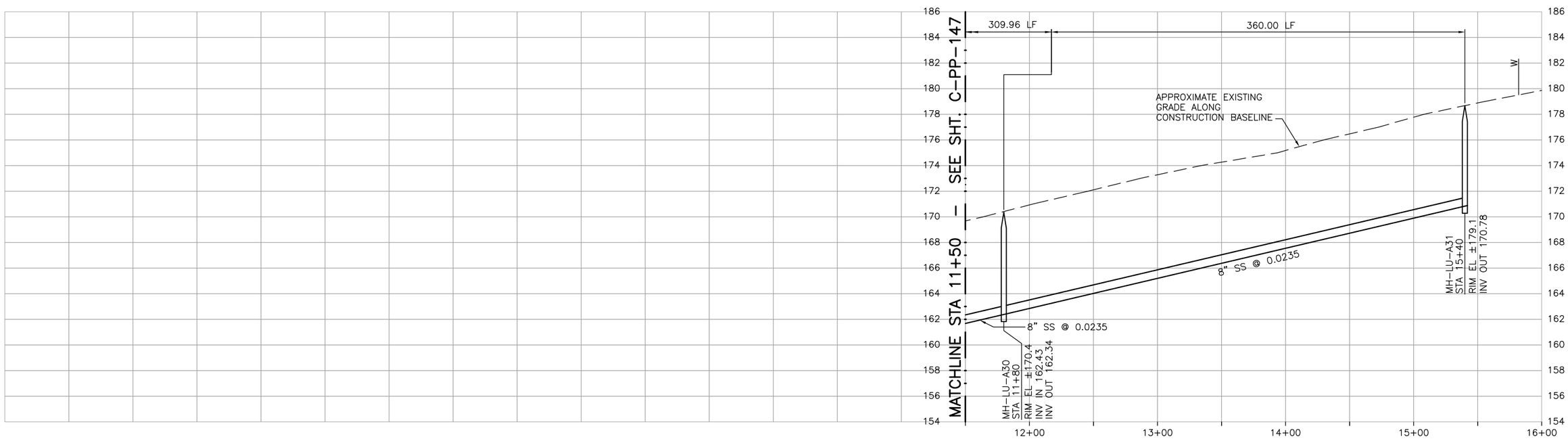

PROFILE ON HIGHLAND DRIVE

DIGALERT
DIAL TOLL FREE
1-800-642-2444
AT LEAST TWO DAYS BEFORE YOU DIG
UNDERGROUND SERVICE ALERT OF NORTHERN CALIFORNIA

REGISTERED PROFESSIONAL ENGINEER
MICHAEL H. MATTHEWS
No. C42546
Exp. 3-31-04
CIVIL
STATE OF CALIFORNIA

REV	DATE	BY	DESCRIPTION

SCALE
HORZ: 1"=40'
VERT: 1"=4'

WARNING
0 1/2 1
IF THIS BAR DOES NOT MEASURE 1" THEN DRAWING IS NOT TO SCALE

DESIGNED MDT/MHM
DRAWN JCM
CHECKED GEH

SUBMITTED BY
JOHN A. BERGEN — C31069 LICENSE NO. — 2-16-2004 DATE
STEVEN J. HYLAND — C23892 LICENSE NO. — 2-16-2004 DATE

LOS OSOS
COMMUNITY SERVICES DISTRICT

MWH
Walnut Creek, California

RMC
Raines, Melton & Carella, Inc.

LOS OSOS WASTEWATER PROJECT
PLAN AND PROFILE
HIGHLAND DRIVE
STA 11+50 TO STA 15+40

SHEET
C-PP-148

C:\Program Files\ACAD2000\CADRMC\ALOSOSOS\C-PP-148.dwg, Layout1, Feb 05, 2004 9:08am, John

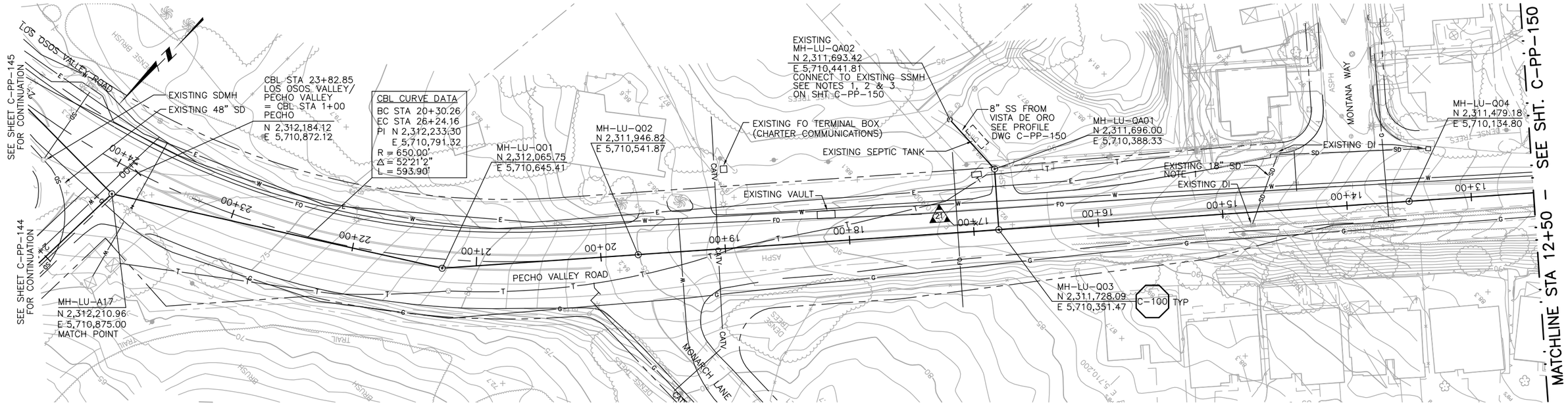

PLAN ON PECHO VALLEY ROAD

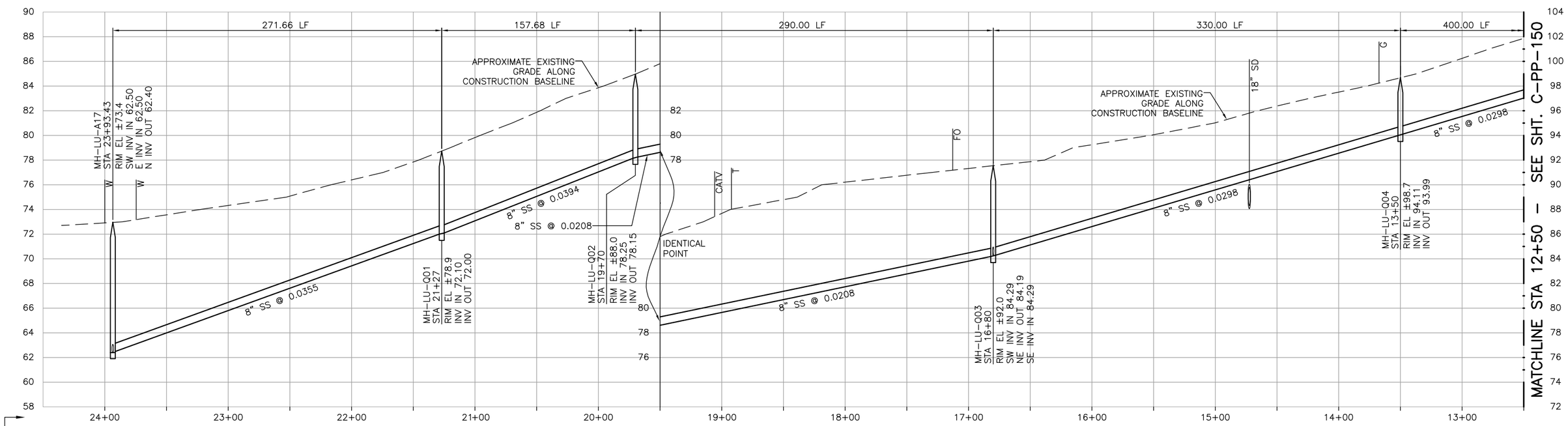

NOTES:
1. CONTRACTOR SHALL VERIFY LOCATION AND DEPTH OF EXISTING STORM DRAIN FACILITIES PRIOR TO BEGINNING WORK.

PROFILE ON PECHO VALLEY ROAD

DIGALERT
DIAL TOLL FREE
1-800-642-2444
AT LEAST TWO DAYS BEFORE YOU DIG
UNDERGROUND SERVICE ALERT OF NORTHERN CALIFORNIA

REGISTERED PROFESSIONAL ENGINEER
No. C42546
Exp. 3-31-04
CIVIL
STATE OF CALIFORNIA

REV	DATE	BY	DESCRIPTION

SCALE
HORZ: 1"=40'
VERT: 1"=4'

WARNING
0 1/2 1
IF THIS BAR DOES NOT MEASURE 1" THEN DRAWING IS NOT TO SCALE

DESIGNED MDT/MHM
DRAWN JCM
CHECKED GEH

SUBMITTED BY
JOHN A. BERGEN — C31069 LICENSE NO. — 2-16-2004 DATE
STEVEN J. HYLAND — C23892 LICENSE NO. — 2-16-2004 DATE

LOS OSOS
COMMUNITY SERVICES DISTRICT

MWH
Walnut Creek, California

RMC
Raines, Melton & Carella, Inc.

LOS OSOS WASTEWATER PROJECT
PLAN AND PROFILE
PECHO VALLEY ROAD
STA 23+99.73 TO STA 12+50

SHEET
C-PP-149

C:\Program Files\ACAD2000\CADRMC\ALOSOSOS\C-PP-149.dwg, Layout1, Feb 05, 2004 9:08am, John

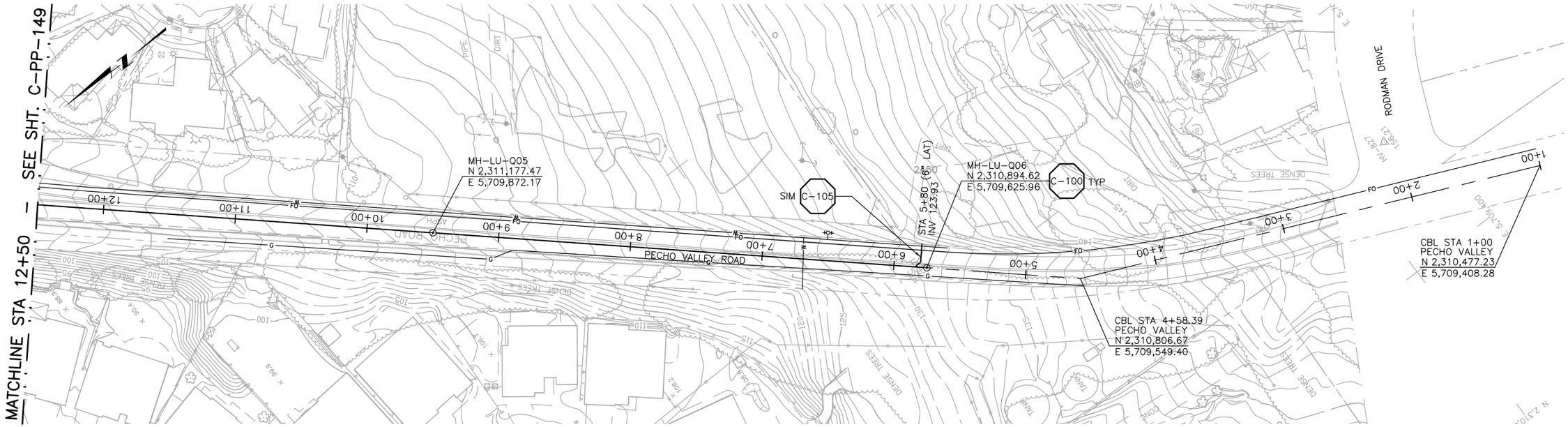

PLAN ON PECHO VALLEY ROAD

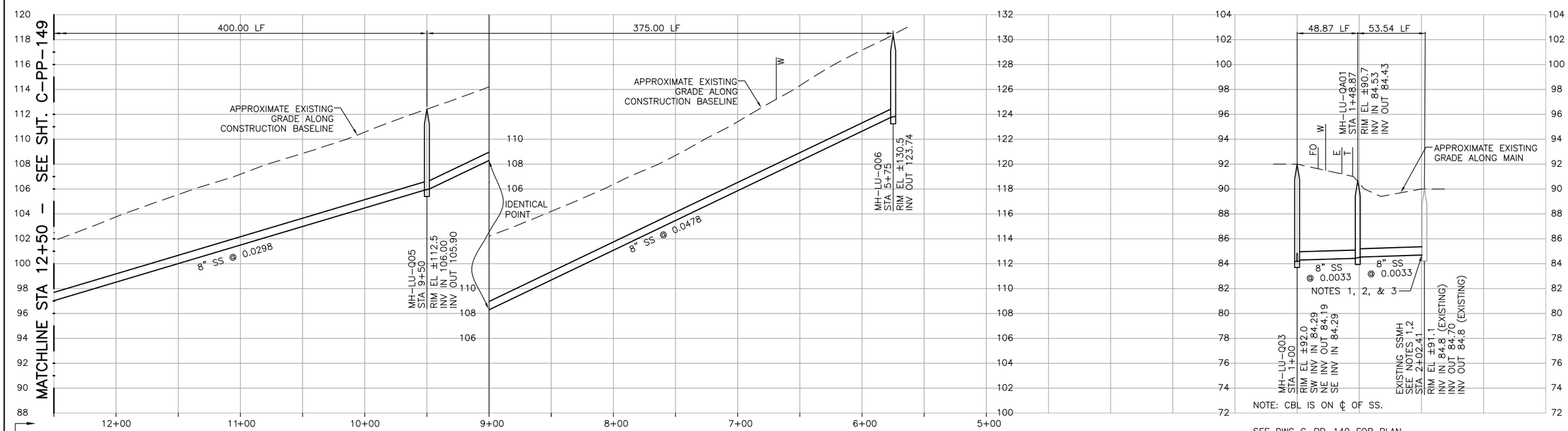

NOTES:

1. CONTRACTOR SHALL VERIFY LOCATION AND DEPTH OF EXISTING SS CONNECTION POINT PRIOR TO BEGINNING WORK.
2. EXISTING SSMH CONNECTION IS "LIVE". CONTRACTOR SHALL TEMPORARILY PLUG MH OUTLET TO MH-LU-QA01 AND NOT ALLOW WASTEWATER TO ENTER SEWER UNTIL ALL DOWNSTREAM IMPROVEMENTS ARE COMPLETE AND CONNECTION IS APPROVED BY LOCSD.
3. CONTRACTOR SHALL PLUG AND ABANDON EXISTING SSMH OUTLET AFTER REROUTING WASTEWATER TO LOCSD WWTP.

PROFILE ON PECHO VALLEY ROAD

SEE DWG C-PP-149 FOR PLAN

PROFILE AT VISTA DE ORO

DIGALERT — DIAL TOLL FREE 1-800-642-2444 — AT LEAST TWO DAYS BEFORE YOU DIG — UNDERGROUND SERVICE ALERT OF NORTHERN CALIFORNIA

REGISTERED PROFESSIONAL ENGINEER — MICHAEL H. MATTHEWS — No. C42546 — Exp. 3-31-04 — CIVIL — STATE OF CALIFORNIA

REV	DATE	BY	DESCRIPTION

SCALE: HORZ: 1"=40' VERT: 1"=4'

WARNING: 0 1/2 1 — IF THIS BAR DOES NOT MEASURE 1" THEN DRAWING IS NOT TO SCALE

DESIGNED MDT/MHM
DRAWN JCM
CHECKED GEH

SUBMITTED BY
JOHN A. BERGEN — C31069 — LICENSE NO. — 2-16-2004 — DATE
STEVEN J. HYLAND — C23892 — LICENSE NO. — 2-16-2004 — DATE

LOS OSOS COMMUNITY SERVICES DISTRICT

MWH Walnut Creek, California

RMC Raines, Melton & Carella, Inc.

LOS OSOS WASTEWATER PROJECT
PLAN AND PROFILE
PECHO VALLEY ROAD
STA 12+50 TO STA 5+75

SHEET C-PP-150

C:\Program Files\ACAD2000\CADRMC\ALOSOS05\C-PP-150.dwg, Layout1, Feb 05, 2004 9:09am, John

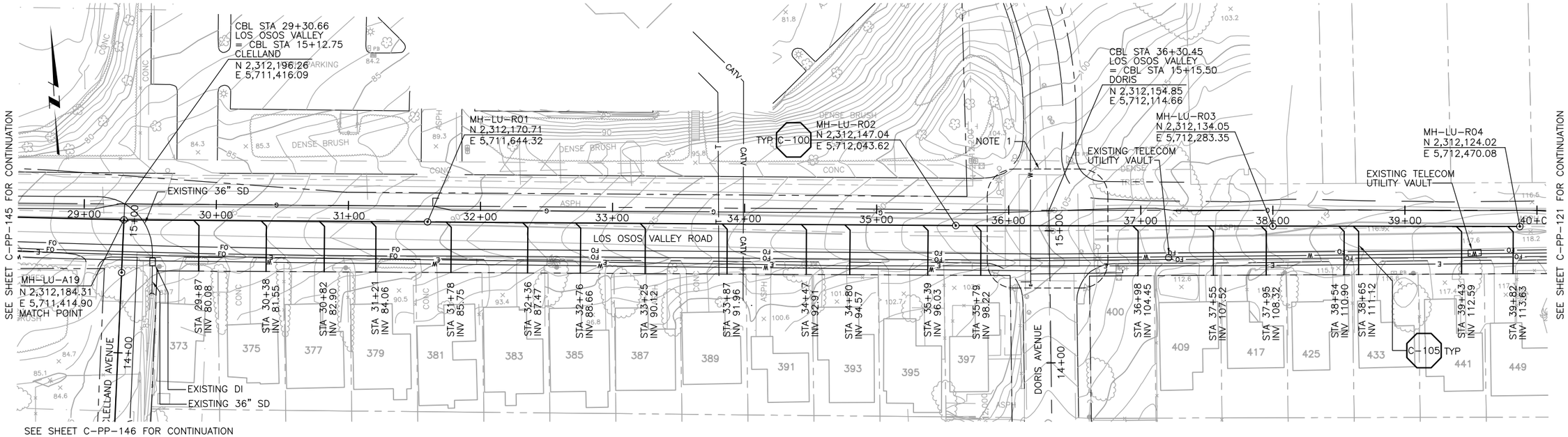

PLAN ON LOS OSOS VALLEY ROAD

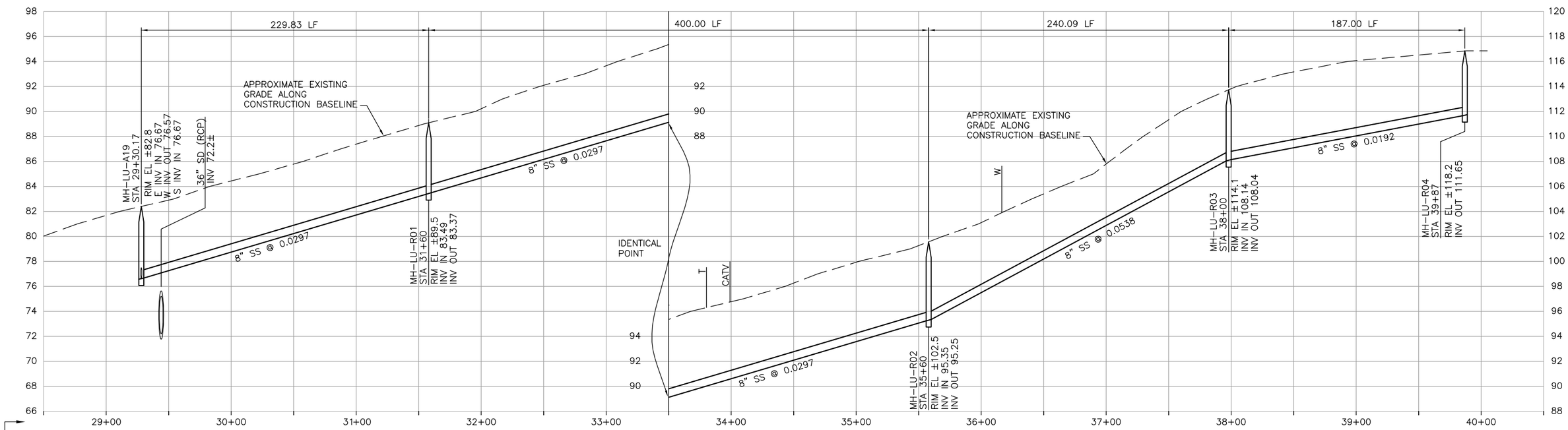

NOTES:

1. CONTRACTOR SHALL REPAIR EXISTING TRAFFIC CONTROL SYSTEM, INCLUDING INSTALLING NEW DETECTOR LOOPS, WHERE CONSTRUCTION RESULTS IN DAMAGE TO EXISTING SYSTEM. CONTRACTOR SHALL COORDINATE REPAIRS WITH COUNTY OF SAN LUIS OBISPO.

PROFILE ON LOS OSOS VALLEY ROAD

DIGALERT
DIAL TOLL FREE
1-800-642-2444
AT LEAST TWO DAYS BEFORE YOU DIG
UNDERGROUND SERVICE ALERT OF NORTHERN CALIFORNIA

REGISTERED PROFESSIONAL ENGINEER
MICHAEL H. MARTIN
No. C42546
Exp. 3-31-04
CIVIL
STATE OF CALIFORNIA

REV	DATE	BY	DESCRIPTION

SCALE
HORZ: 1"=40'
VERT: 1"=4'

WARNING
0 1/2 1
IF THIS BAR DOES NOT MEASURE 1" THEN DRAWING IS NOT TO SCALE

DESIGNED MDT/MHM
DRAWN JCM
CHECKED GEH

SUBMITTED BY
JOHN A. BERGEN — C31069 — 2-16-2004
STEVEN J. HYLAND — C23892 — 2-16-2004
LICENSE NO. / DATE

LOS OSOS
COMMUNITY SERVICES DISTRICT

MWH
Walnut Creek, California

RMC
Raines, Melton & Carella, Inc.

LOS OSOS WASTEWATER PROJECT
PLAN AND PROFILE
LOS OSOS VALLEY ROAD
STA 29+30.17 TO STA 39+87

SHEET
C-PP-151

C:\Program Files\ACAD2000\CADRMC\ALOSOSOS\C-PP-151.dwg, Layout1, Feb 05, 2004 9:10am, John

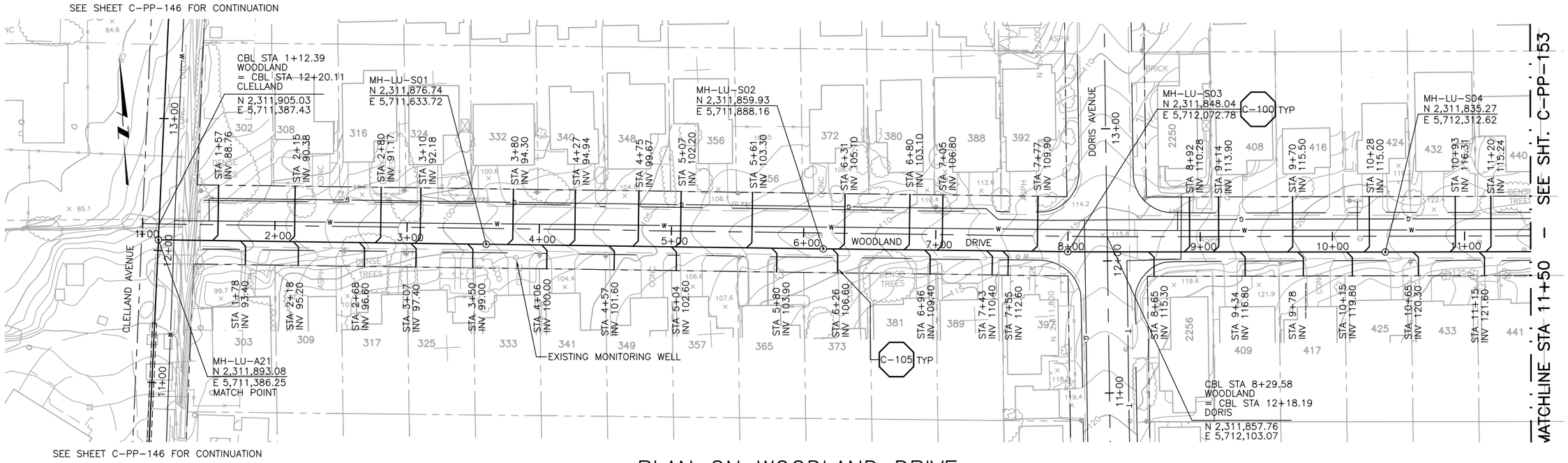

PLAN ON WOODLAND DRIVE

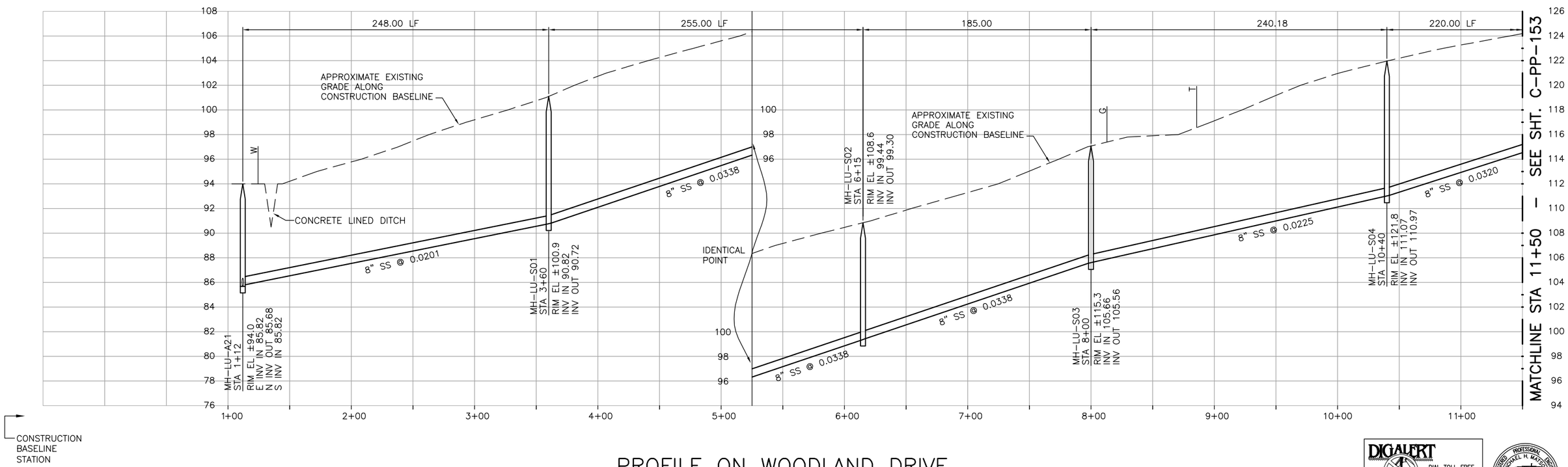

PROFILE ON WOODLAND DRIVE

DIGALERT
DIAL TOLL FREE
1-800-642-2444
AT LEAST TWO DAYS BEFORE YOU DIG
UNDERGROUND SERVICE ALERT OF NORTHERN CALIFORNIA

REGISTERED PROFESSIONAL ENGINEER
No. C42546
Exp. 3-31-04
CIVIL
STATE OF CALIFORNIA

REV	DATE	BY	DESCRIPTION

SCALE
HORZ: 1"=40'
VERT: 1"=4'

WARNING
0 1/2 1
IF THIS BAR DOES NOT MEASURE 1" THEN DRAWING IS NOT TO SCALE

DESIGNED MDT/MHM
DRAWN JCM
CHECKED GEH

SUBMITTED BY
JOHN A. BERGEN — C31069 LICENSE NO. — 2-16-2004 DATE
STEVEN J. HYLAND — C23892 LICENSE NO. — 2-16-2004 DATE

LOS OSOS
COMMUNITY SERVICES DISTRICT

MWH
Walnut Creek, California

RMC
Raines, Melton & Carella, Inc.

LOS OSOS WASTEWATER PROJECT
PLAN AND PROFILE
WOODLAND DRIVE
STA 1+12 TO STA 11+50

SHEET
C-PP-152

C:\Program Files\ACAD2000\CADRMC\ALOSOSOS\C-PP-152.dwg, Layout1, Feb 05, 2004 9:11am, John

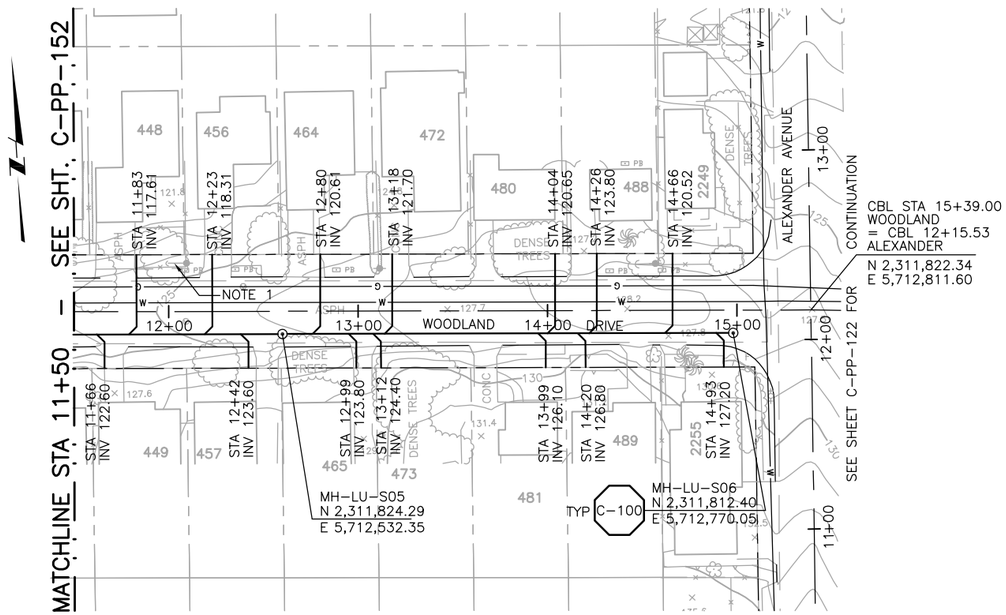

PLAN ON WOODLAND DRIVE

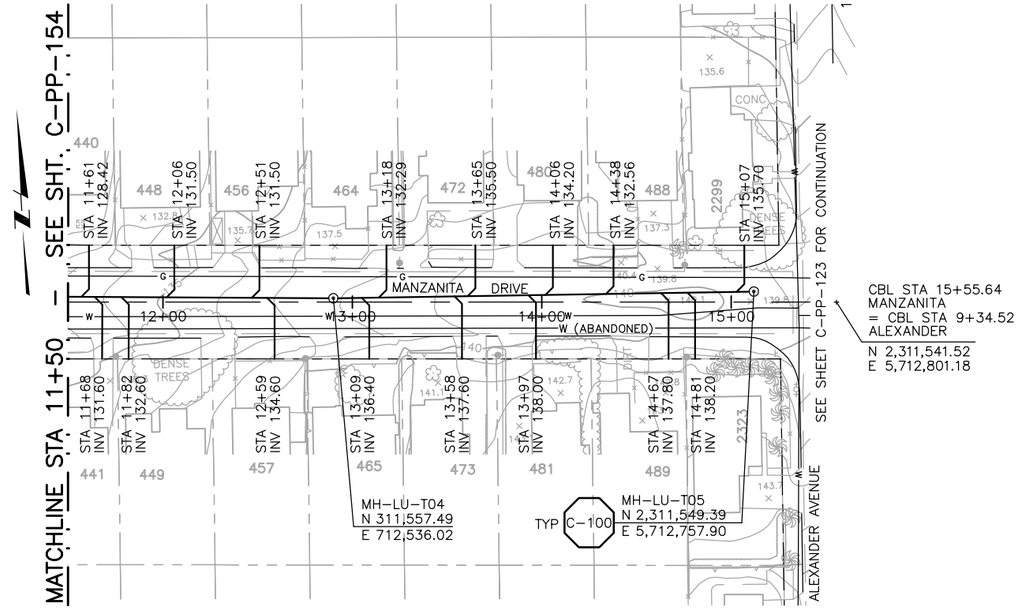

PLAN ON MANZANITA DRIVE

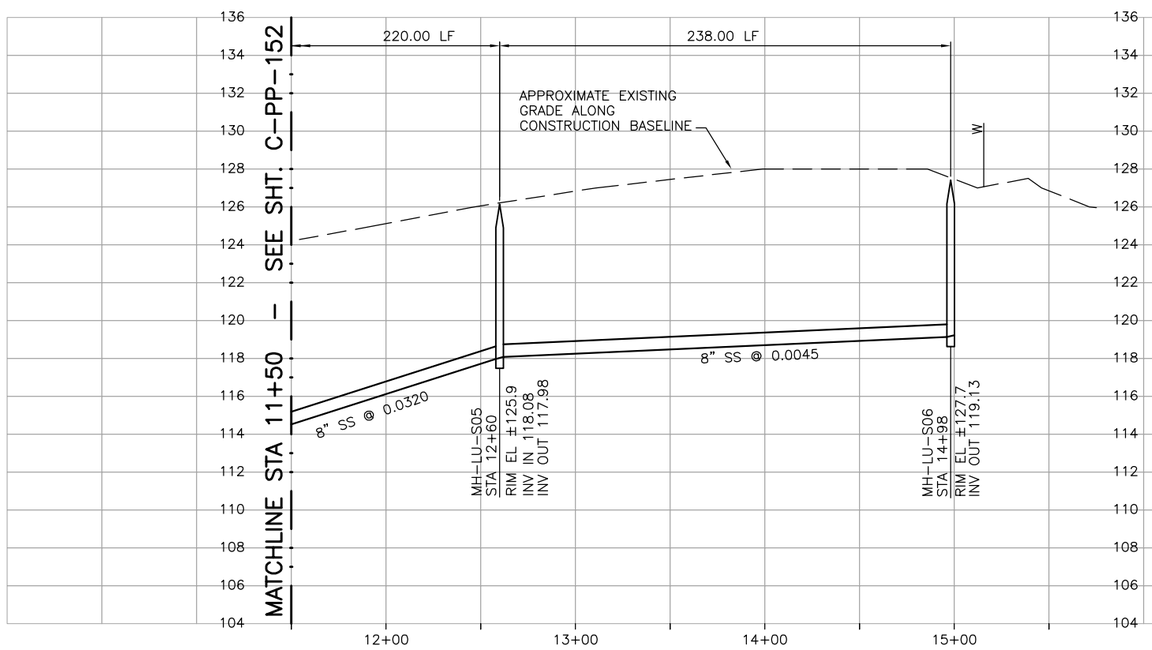

PROFILE ON WOODLAND DRIVE

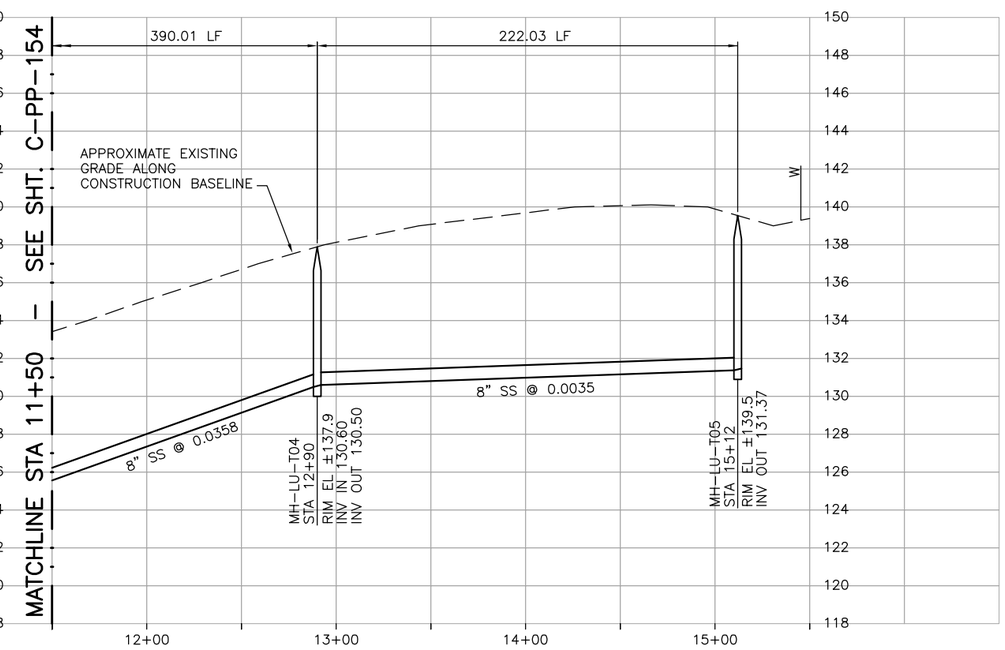

PROFILE ON MANZANITA DRIVE

CONSTRUCTION BASELINE STATION

NOTES:

1. CONTRACTOR SHALL TEMPORARILY SUPPORT EXISTING POWER POLE AS REQUIRED. COORDINATE WITH PG&E.

DIGALERT — DIAL TOLL FREE 1-800-642-2444 — AT LEAST TWO DAYS BEFORE YOU DIG — UNDERGROUND SERVICE ALERT OF NORTHERN CALIFORNIA

REGISTERED PROFESSIONAL ENGINEER — MICHAEL H. MAYER — No. C42546 — Exp. 3-31-04 — CIVIL — STATE OF CALIFORNIA

REV	DATE	BY	DESCRIPTION

SCALE: HORZ: 1"=40' VERT: 1"=4'

WARNING: 0 1/2 1 — IF THIS BAR DOES NOT MEASURE 1" THEN DRAWING IS NOT TO SCALE

DESIGNED MDT/MHM
DRAWN JCM
CHECKED GEH

SUBMITTED BY
JOHN A. BERGEN — C31069 LICENSE NO. — 2-16-2004 DATE
STEVEN J. HYLAND — C23892 LICENSE NO. — 2-16-2004 DATE

LOS OSOS COMMUNITY SERVICES DISTRICT

MWH Walnut Creek, California

RMC Raines, Melton & Carella, Inc.

LOS OSOS WASTEWATER PROJECT
PLAN AND PROFILE
WOODLAND DRIVE – 11+50 TO 14+98
MANZANITA DRIVE – 11+50 TO 15+12

SHEET C-PP-153

C:\Program Files\ACAD2000\CADRMC\ALOSOSOS\C-PP-153.dwg, Layout1, Feb 05, 2004 9:12am, John

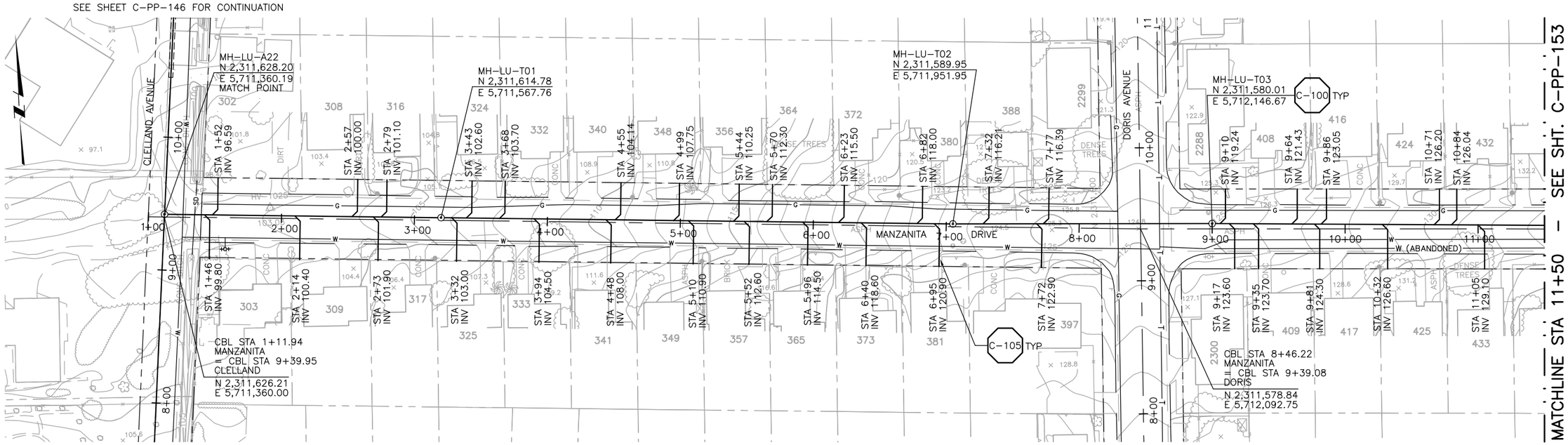

PLAN ON MANZANITA DRIVE

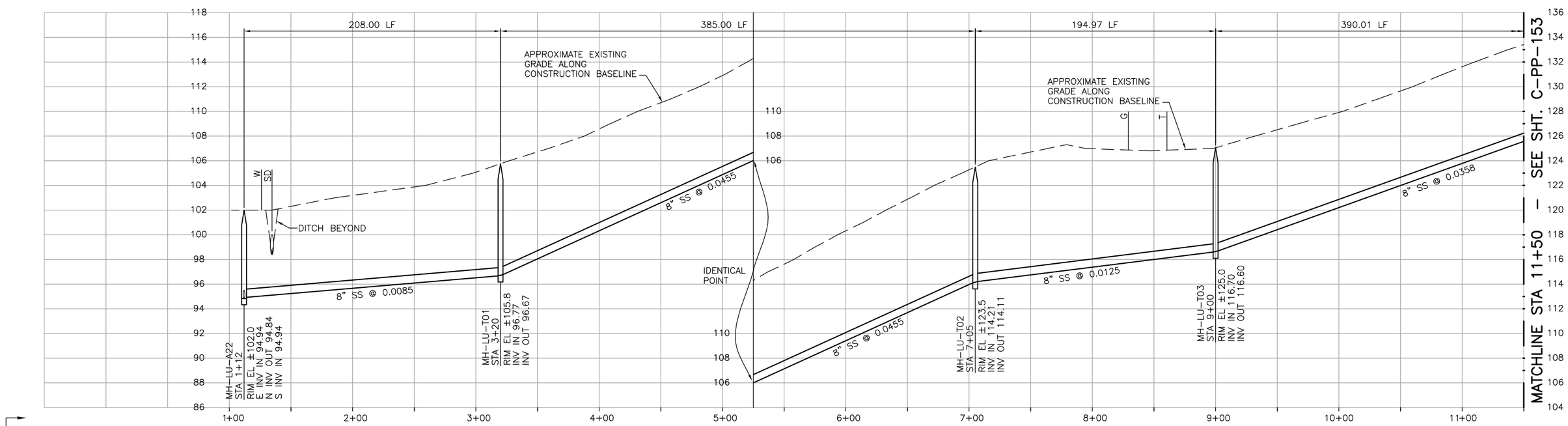

PROFILE ON MANZANITA DRIVE

DIGALERT — DIAL TOLL FREE 1-800-642-2444 — AT LEAST TWO DAYS BEFORE YOU DIG — UNDERGROUND SERVICE ALERT OF NORTHERN CALIFORNIA

REGISTERED PROFESSIONAL ENGINEER — MICHAEL H. MAYS — No. C42546 — Exp. 3-31-04 — CIVIL — STATE OF CALIFORNIA

REV	DATE	BY	DESCRIPTION

SCALE: HORZ: 1"=40' VERT: 1"=4'

WARNING: 0 1/2 1 — IF THIS BAR DOES NOT MEASURE 1" THEN DRAWING IS NOT TO SCALE

DESIGNED MDT/MHM
DRAWN JCM
CHECKED GEH

SUBMITTED BY
JOHN A. BERGEN — C31069 LICENSE NO. — 2-16-2004 DATE
STEVEN J. HYLAND — C23892 LICENSE NO. — 2-16-2004 DATE

LOS OSOS COMMUNITY SERVICES DISTRICT

MWH Walnut Creek, California

RMC Raines, Melton & Carella, Inc.

LOS OSOS WASTEWATER PROJECT
PLAN AND PROFILE
MANZANITA DRIVE
STA 1+12 TO STA 11+50

SHEET C-PP-154

C:\Program Files\ACAD2000\CADRMC\ALOSOS05\C-PP-154.dwg, Layout1, Feb 05, 2004 9:13am, John

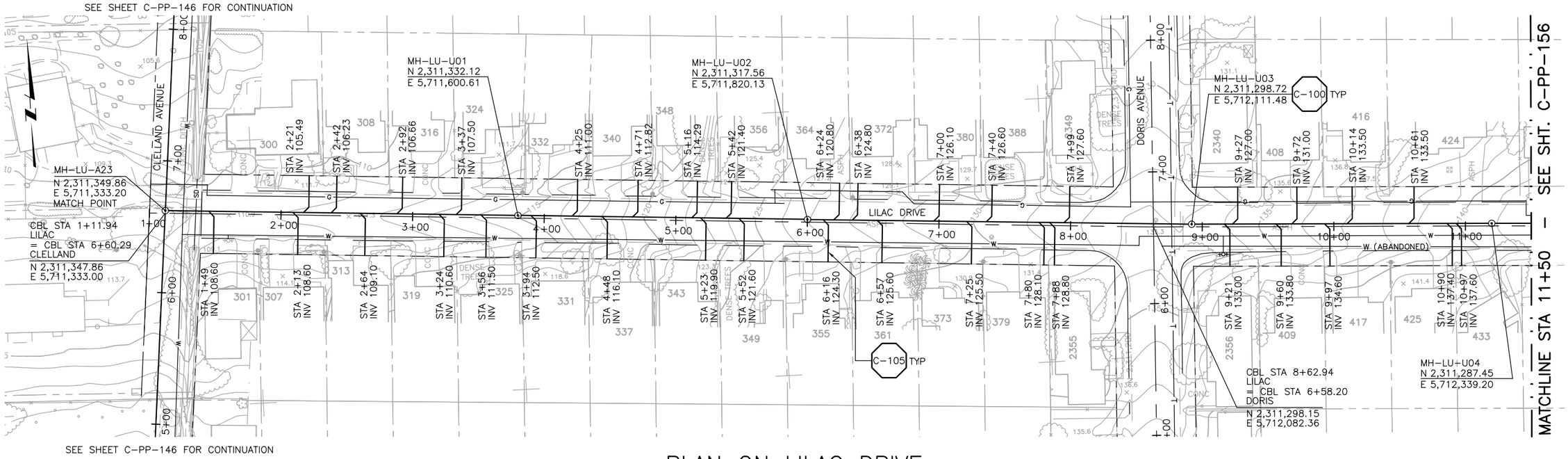

PLAN ON LILAC DRIVE

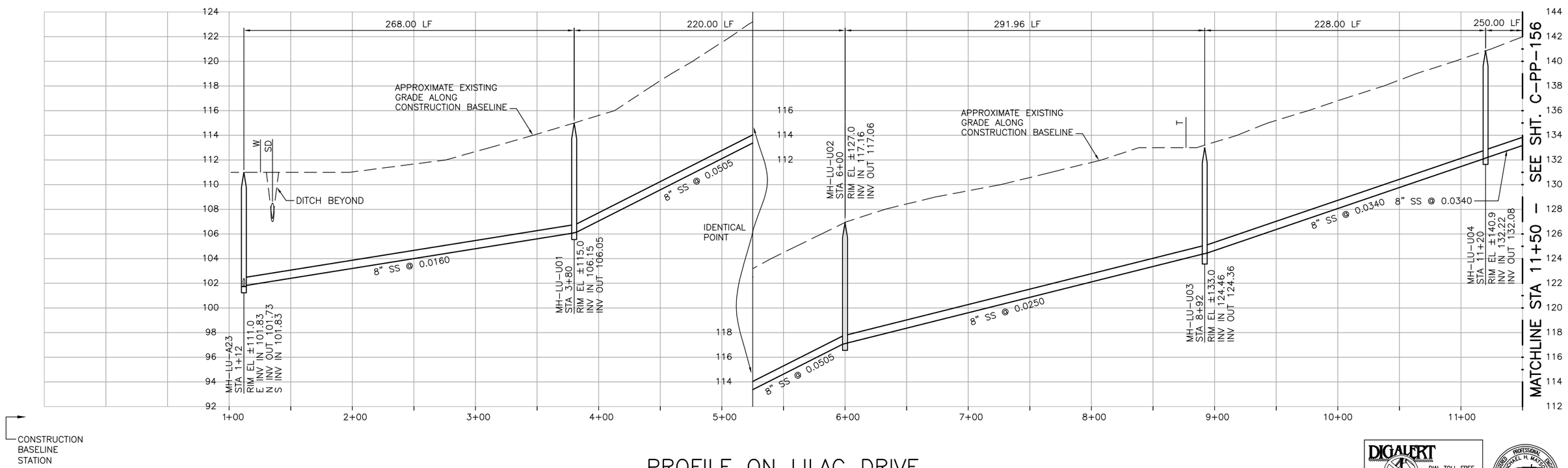

PROFILE ON LILAC DRIVE

DIGALERT — DIAL TOLL FREE 1-800-642-2444 — AT LEAST TWO DAYS BEFORE YOU DIG — UNDERGROUND SERVICE ALERT OF NORTHERN CALIFORNIA

REGISTERED PROFESSIONAL ENGINEER — MICHAEL H. MAY — No. C42546 — Exp. 3-31-04 — CIVIL — STATE OF CALIFORNIA

REV	DATE	BY	DESCRIPTION

SCALE: HORZ: 1"=40' VERT: 1"=4'

WARNING: 0 1/2 1 — IF THIS BAR DOES NOT MEASURE 1" THEN DRAWING IS NOT TO SCALE

DESIGNED MDT/MHM
DRAWN JCM
CHECKED GEH

SUBMITTED BY
JOHN A. BERGEN — C31069 LICENSE NO. — 2-16-2004 DATE
STEVEN J. HYLAND — C23892 LICENSE NO. — 2-16-2004 DATE

LOS OSOS COMMUNITY SERVICES DISTRICT

MWH Walnut Creek, California

RMC Raines, Melton & Carella, Inc.

LOS OSOS WASTEWATER PROJECT
PLAN AND PROFILE
LILAC DRIVE
STA 1+12 TO STA 11+50

SHEET C-PP-155

C:\Program Files\ACAD2000\CADRMC\ALOSOSOS\C-PP-155.dwg, Layout1, Feb 05, 2004 9:13am, John

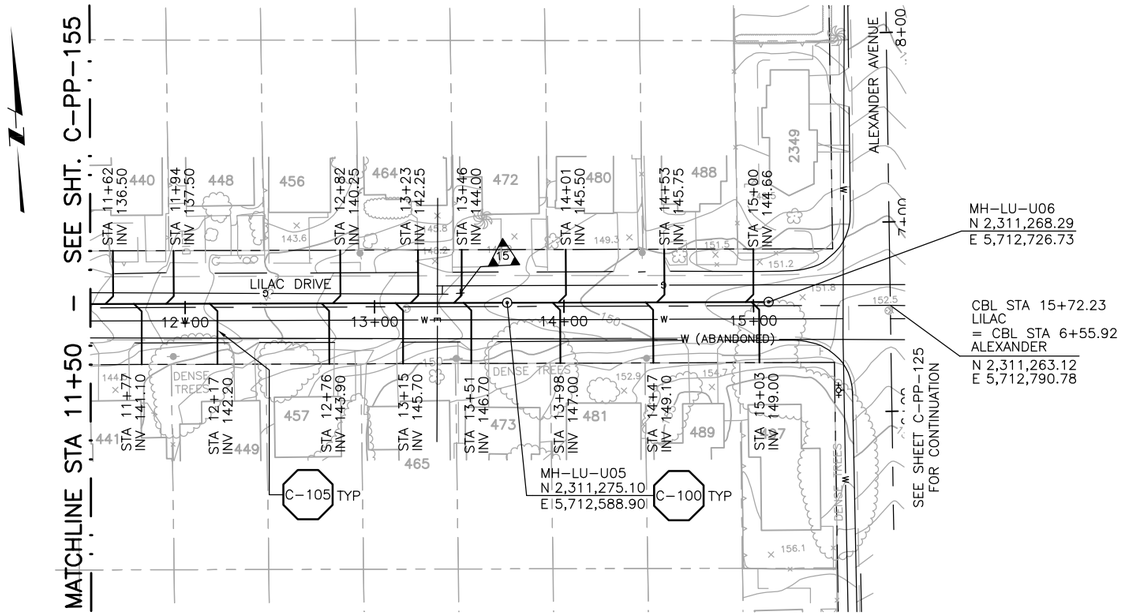

PLAN ON LILAC DRIVE

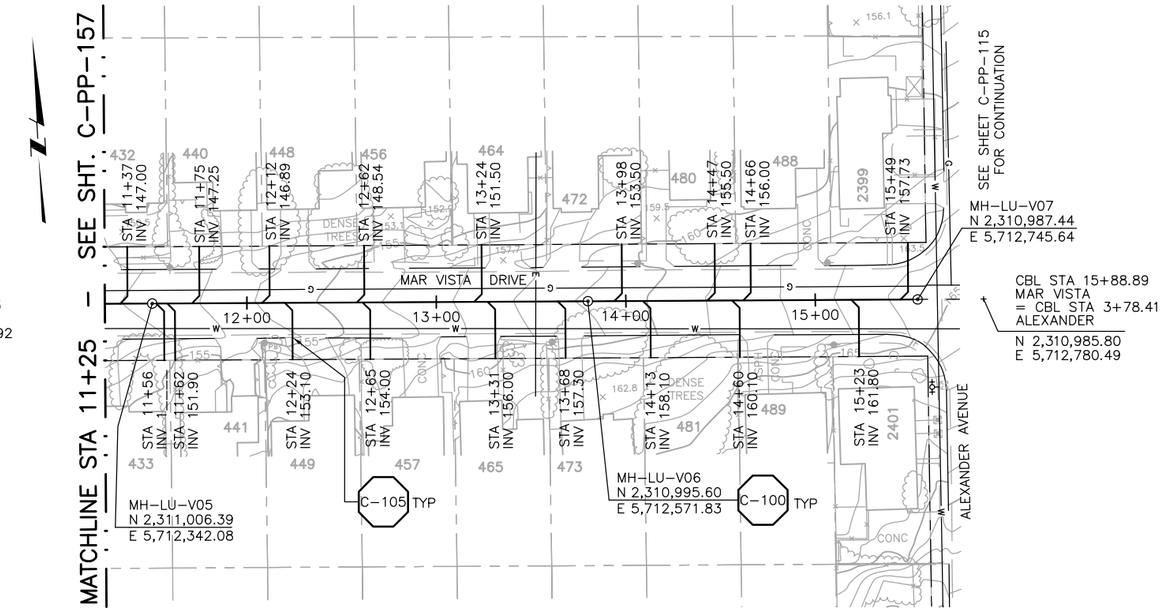

PLAN ON MAR VISTA DRIVE

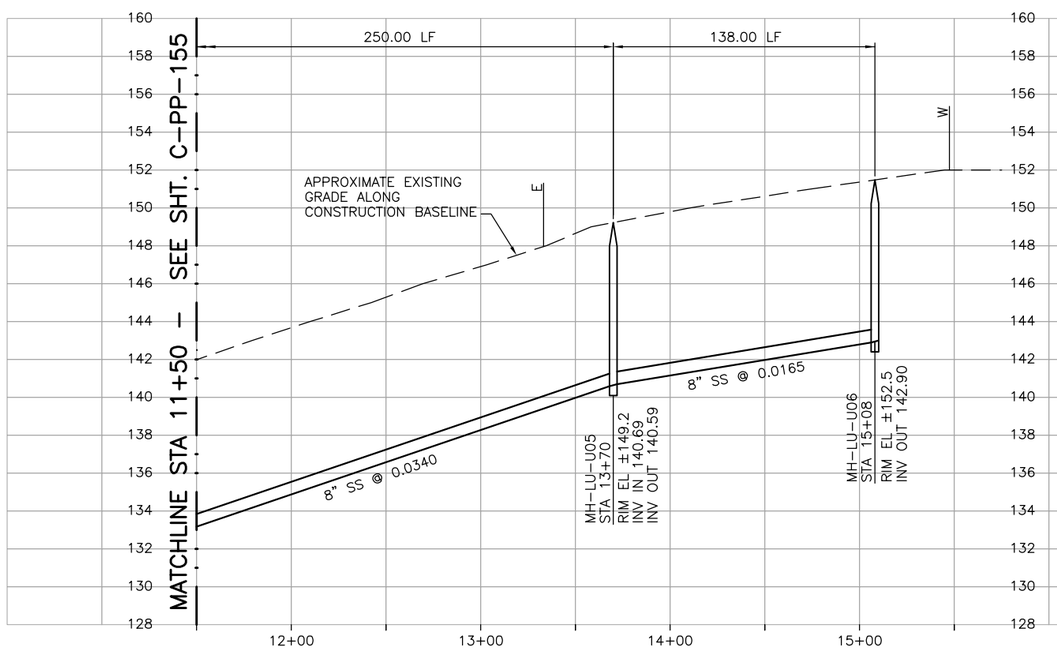

PROFILE ON LILAC DRIVE

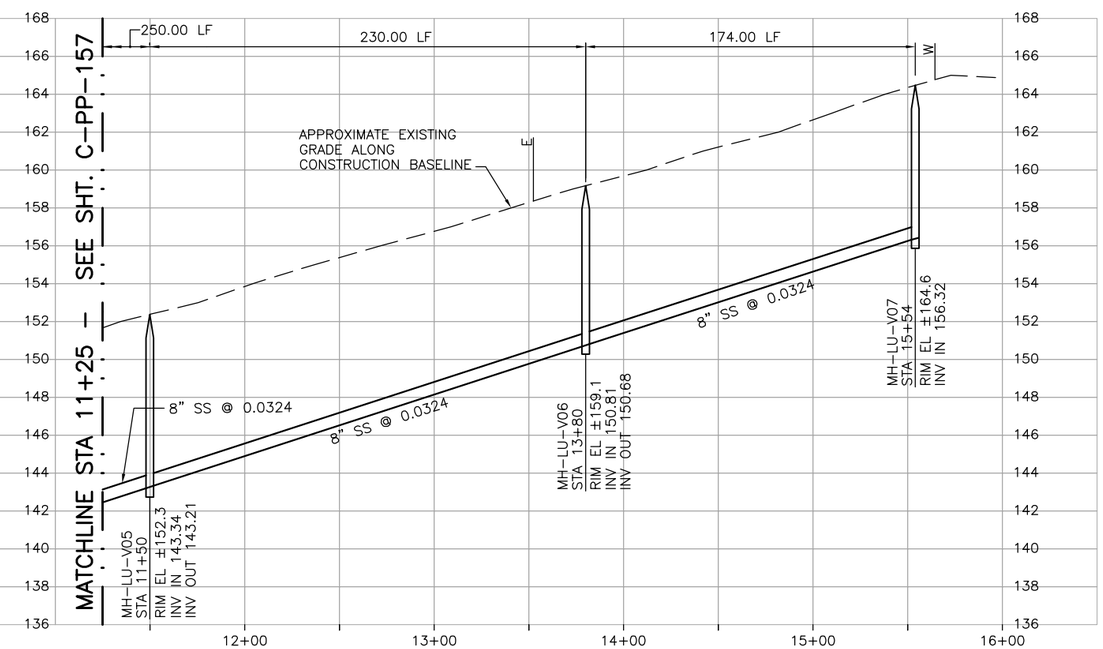

PROFILE ON MAR VISTA DRIVE

DIGALERT
DIAL TOLL FREE
1-800-642-2444
AT LEAST TWO DAYS BEFORE YOU DIG
UNDERGROUND SERVICE ALERT OF NORTHERN CALIFORNIA

REGISTERED PROFESSIONAL ENGINEER
MICHAEL H. MAYO
No. C42546
Exp. 3-31-04
CIVIL
STATE OF CALIFORNIA

REV	DATE	BY	DESCRIPTION

SCALE
HORZ: 1"=40'
VERT: 1"=4'

WARNING
0 1/2 1
IF THIS BAR DOES NOT MEASURE 1" THEN DRAWING IS NOT TO SCALE

DESIGNED MDT/MHM
DRAWN JCM
CHECKED GEH

SUBMITTED BY
JOHN A. BERGEN — C31069 LICENSE NO. — 2-16-2004 DATE
STEVEN J. HYLAND — C23892 LICENSE NO. — 2-16-2004 DATE

LOS OSOS
COMMUNITY SERVICES DISTRICT

MWH
Walnut Creek, California

RMC
Raines, Melton & Carella, Inc.

LOS OSOS WASTEWATER PROJECT
PLAN AND PROFILE
LILAC DRIVE – 11+50 TO 15+08
MAR VISTA DRIVE – 11+25 TO 15+54

SHEET
C-PP-156

C:\Program Files\ACAD2000\CADRMC\ALOSOS05\C-PP-156.dwg, Layout1, Feb 05, 2004 9:14am, John

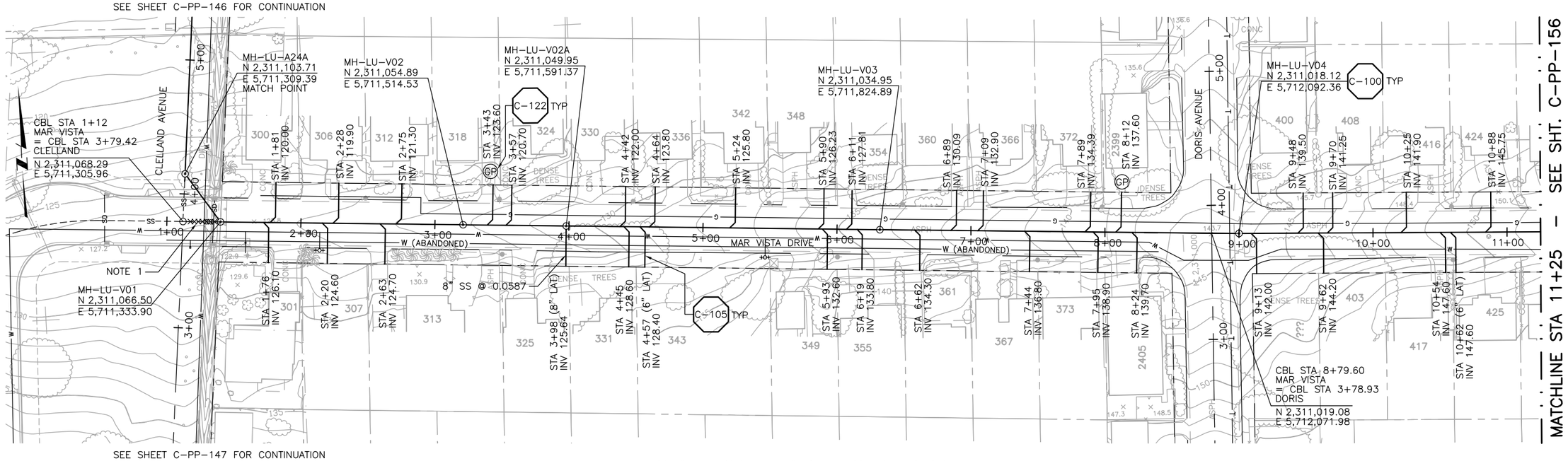

PLAN ON MAR VISTA DRIVE

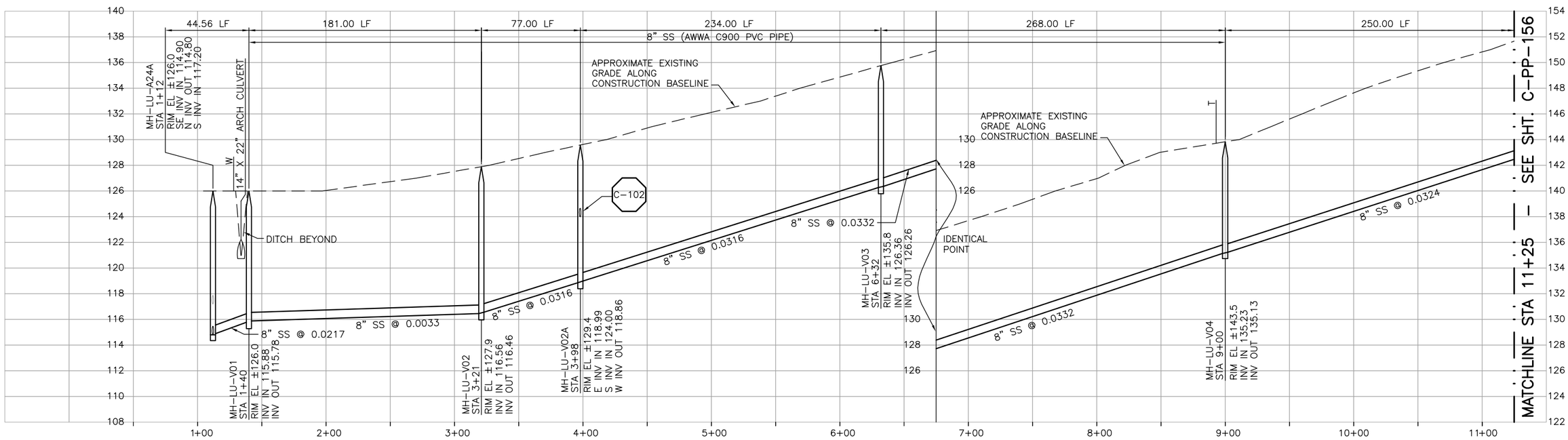

NOTES:

1. CONTRACTOR SHALL REMOVE EXISTING PVC SEWER AS NECESSARY TO INSTALL MH-LU-V01A. PLUG WITH CONCRETE AND ABANDON EXISTING SEWER TO WEST.

PROFILE ON MAR VISTA DRIVE

DIGALERT — DIAL TOLL FREE 1-800-642-2444 — AT LEAST TWO DAYS BEFORE YOU DIG — UNDERGROUND SERVICE ALERT OF NORTHERN CALIFORNIA

REGISTERED PROFESSIONAL ENGINEER — MICHAEL H. WATSON — No. C42546 — Exp. 3-31-04 — CIVIL — STATE OF CALIFORNIA

REV	DATE	BY	DESCRIPTION

SCALE: HORZ: 1"=40' VERT: 1"=4'

WARNING: 0 1/2 1 — IF THIS BAR DOES NOT MEASURE 1" THEN DRAWING IS NOT TO SCALE

DESIGNED MDT/MHM
DRAWN JCM
CHECKED GEH

SUBMITTED BY
JOHN A. BERGEN — C31069 — LICENSE NO. — 2-16-2004 — DATE
STEVEN J. HYLAND — C23892 — LICENSE NO. — 2-16-2004 — DATE

LOS OSOS COMMUNITY SERVICES DISTRICT

MWH Walnut Creek, California

RMC Raines, Melton & Carella, Inc.

LOS OSOS WASTEWATER PROJECT
PLAN AND PROFILE
MAR VISTA DRIVE
STA 1+12 TO STA 11+25

SHEET C-PP-157

C:\Program Files\ACAD2000\CADRMC\ALOSOSOS\C-PP-157.dwg, Layout1, Feb 05, 2004 1:40pm, John

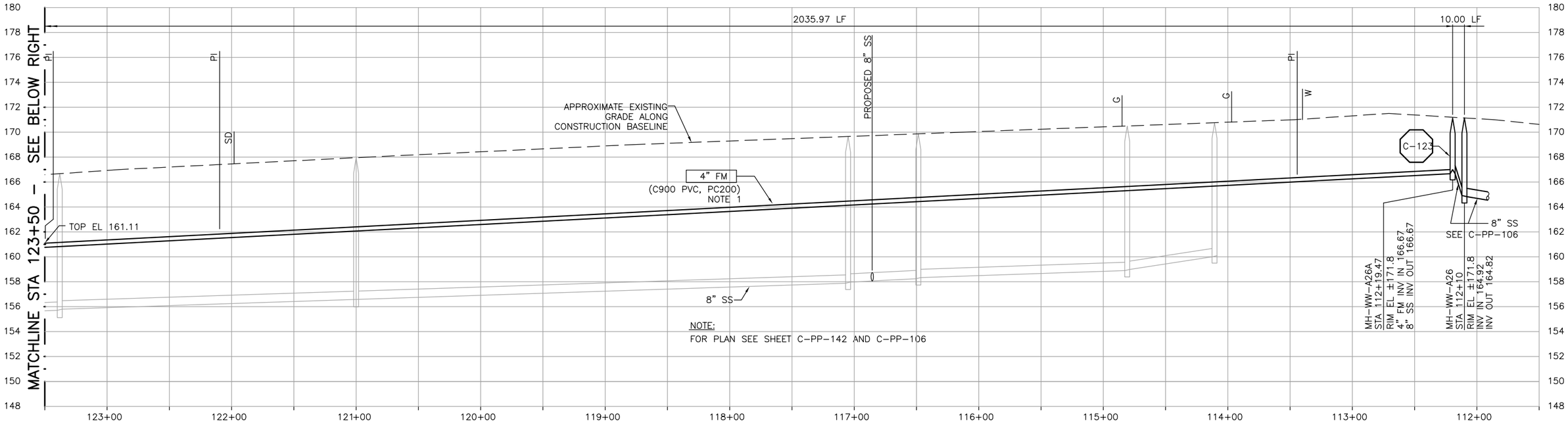

PROFILE ON LOS OSOS VALLEY ROAD

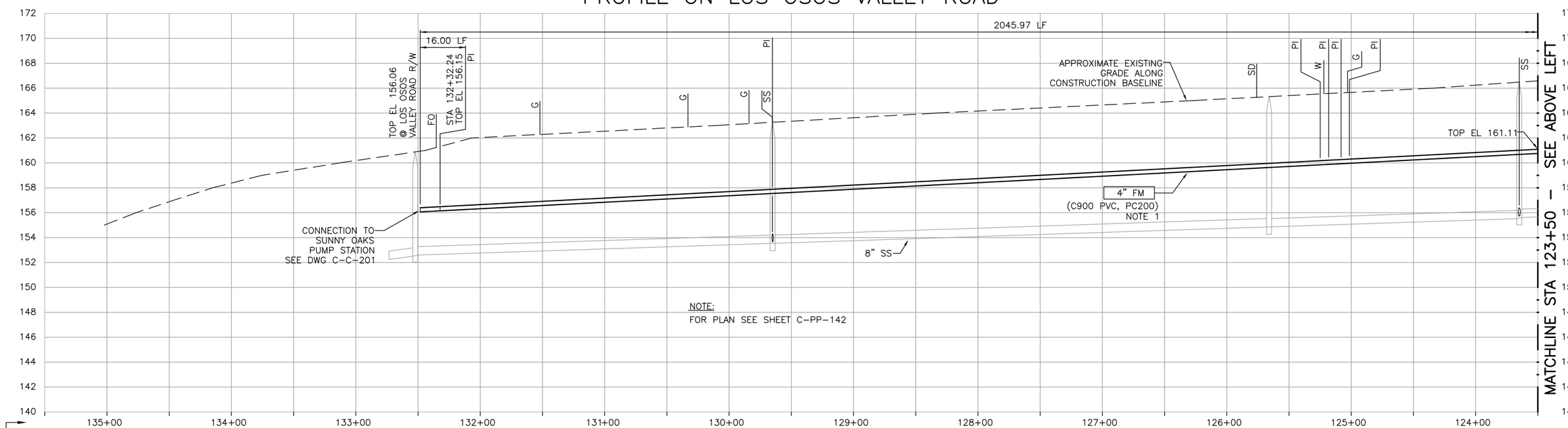

CONSTRUCTION BASELINE STATION

NOTES:

1. CONTRACTOR SHALL INSTALL 4" FM ON A CONTINUOUSLY RISING SLOPE FROM SUNNY OAKS PUMP STATION TO MH-WW-A22.

PROFILE ON LOS OSOS VALLEY ROAD

DIGALERT
DIAL TOLL FREE
1-800-642-2444
AT LEAST TWO DAYS BEFORE YOU DIG
UNDERGROUND SERVICE ALERT OF NORTHERN CALIFORNIA

REGISTERED PROFESSIONAL ENGINEER
MICHAEL H. MASTERS
No. C42546
Exp. 3-31-04
CIVIL
STATE OF CALIFORNIA

REV	DATE	BY	DESCRIPTION

SCALE
HORZ: 1"=40'
VERT: 1"=4'

WARNING
0 1/2 1
IF THIS BAR DOES NOT MEASURE 1" THEN DRAWING IS NOT TO SCALE

DESIGNED MDT/MHM
DRAWN JCM
CHECKED GEH

SUBMITTED BY
JOHN A. BERGEN — C31069 LICENSE NO. — 2-16-2004 DATE
STEVEN J. HYLAND — C23892 LICENSE NO. — 2-16-2004 DATE

LOS OSOS
COMMUNITY SERVICES DISTRICT

MWH
Walnut Creek, California

RMC
Raines, Melton & Carella, Inc.

LOS OSOS WASTEWATER PROJECT
SUNNY OAKS FORCE MAIN PROFILE
LOS OSOS VALLEY ROAD
STA 132+32.24 TO STA 112+10

SHEET
C-PP-158

C:\Program Files\ACAD2000\CADRMC\ALOSOSOS\C-PP-158.dwg, Layout1, Feb 05, 2004 9:17am, John

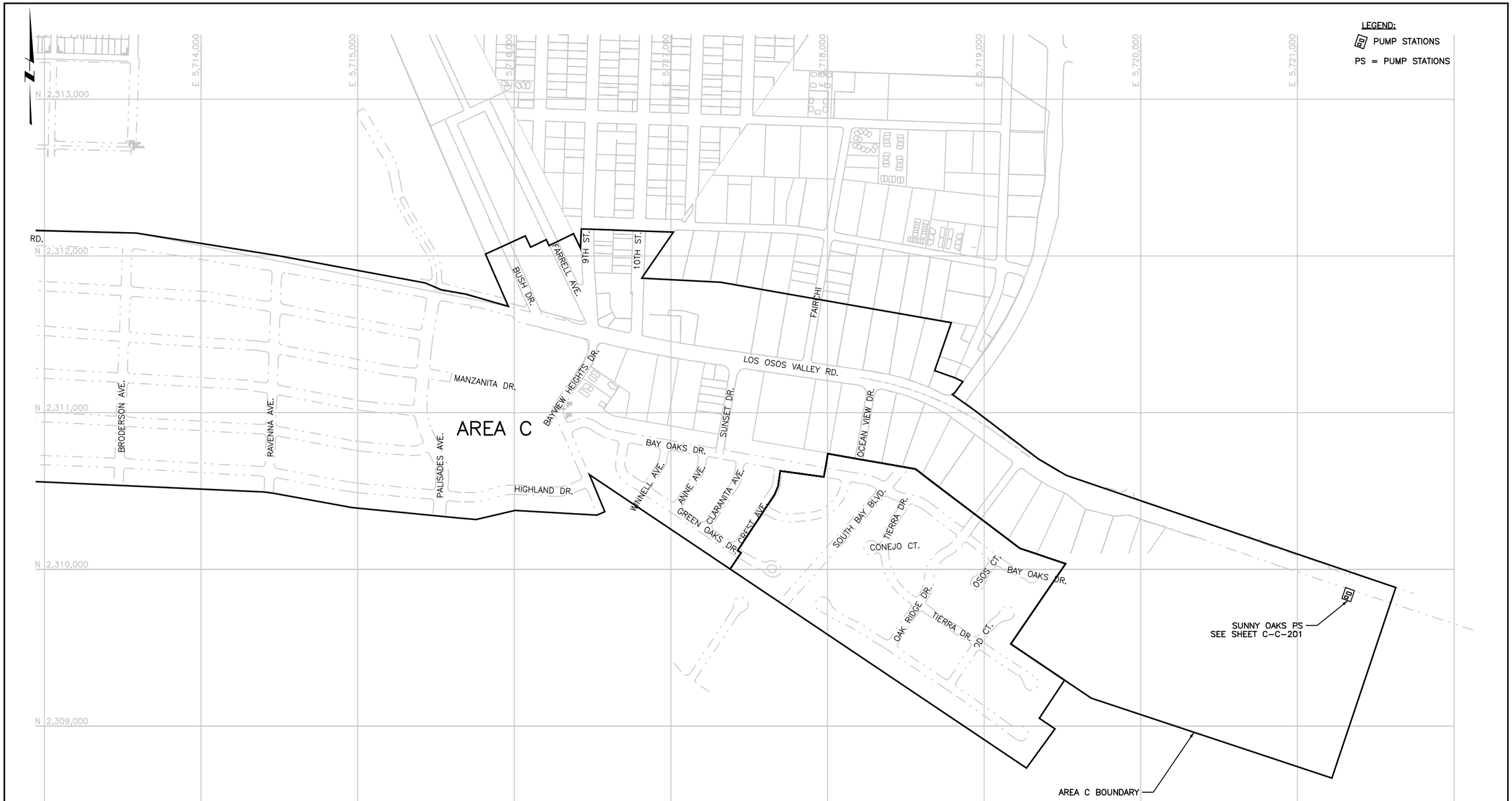

NOTE:
AREA INDICATED IS A PORTION OF AREA C, FOR OVERALL PLAN OF AREA C SEE GENERAL SHEET BC-G-002.

REGISTERED PROFESSIONAL ENGINEER JOHN A. BERGEN No. 48027 Exp. 12-31-03 CIVIL STATE OF CALIFORNIA

REV	DATE	BY	DESCRIPTION

SCALE 1"=300'

WARNING 0 1/2 1 IF THIS BAR DOES NOT MEASURE 1" THEN DRAWING IS NOT TO SCALE

DESIGNED M RACKOW
DRAWN M RACKOW
CHECKED R BUI

SUBMITTED BY
JOHN A. BERGEN — C31069 LICENSE NO. — 2/16/2004 DATE
STEVE J. HYLAND — C23892 LICENSE NO. — 2/16/2004 DATE

DIGALERT DIAL TOLL FREE 1-800-642-2444 AT LEAST TWO DAYS BEFORE YOU DIG UNDERGROUND SERVICE ALERT OF NORTHERN CALIFORNIA

LOS OSOS COMMUNITY SERVICES DISTRICT

MWH Walnut Creek, California

LOS OSOS WASTEWATER PROJECT
CIVIL
AREA C KEY PLAN

SHEET C-C-200

Job No: 1481166 File: N:\Projects\los_osos\Collect_Sys\PS\civ\C-C-200.dgn Plot Date: 09-FEB-2004 12:22

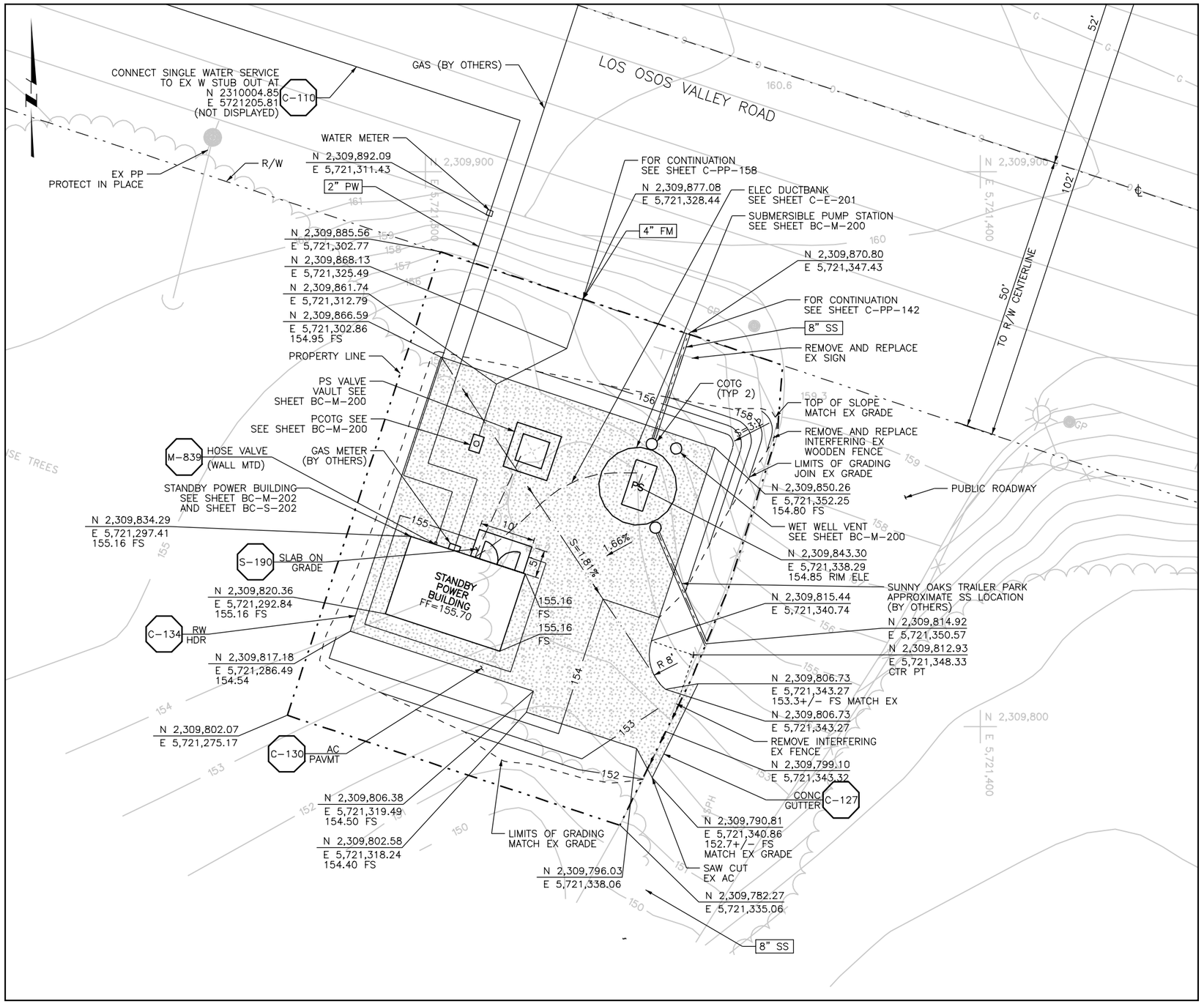

SUNNY OAKS PS SITE

NOTES:

1. LIDS AND VAULTS TO BE TRAFFIC RATED FOR H-20 LOADING
2. COORDINATE ELECTRICAL DUCTBANK DEPTH AND LOCATION BEFORE INSTALLATION OF PROCESS PIPING. SEE SHEET C-E-201.
3. CONTRACTOR SHALL COORDINATE AND SCHEDULE GAS LINE CONNECTION AND INSTALLATION WITH PACIFIC GAS AND ELECTRIC.

REGISTERED PROFESSIONAL ENGINEER JOHN A. BERGEN No. C 48027 Exp. 12-31-05 CIVIL STATE OF CALIFORNIA

REV	DATE	BY	DESCRIPTION

SCALE 1"=10'

WARNING 0 1/2 1 IF THIS BAR DOES NOT MEASURE 1" THEN DRAWING IS NOT TO SCALE

DESIGNED M RACKOW
DRAWN M RACKOW
CHECKED G BEHNKE

SUBMITTED BY
JOHN A. BERGEN — C31069 LICENSE NO. — 2/16/2004 DATE
STEVE J. HYLAND — C23892 LICENSE NO. — 2/16/2004 DATE

DIGALERT DIAL TOLL FREE 1-800-642-2444 AT LEAST TWO DAYS BEFORE YOU DIG UNDERGROUND SERVICE ALERT OF NORTHERN CALIFORNIA

LOS OSOS COMMUNITY SERVICES DISTRICT

MWH Walnut Creek, California

LOS OSOS WASTEWATER PROJECT
CIVIL
SUNNY OAKS PS & STANDBY POWER SITE PLAN

SHEET C-C-201

Plot Date: 09-FEB-2004 12:23
File: N:\Projects\los_osos\Collect_Sys\PS\civ\C-C-201.dgn
Job No: 1481166

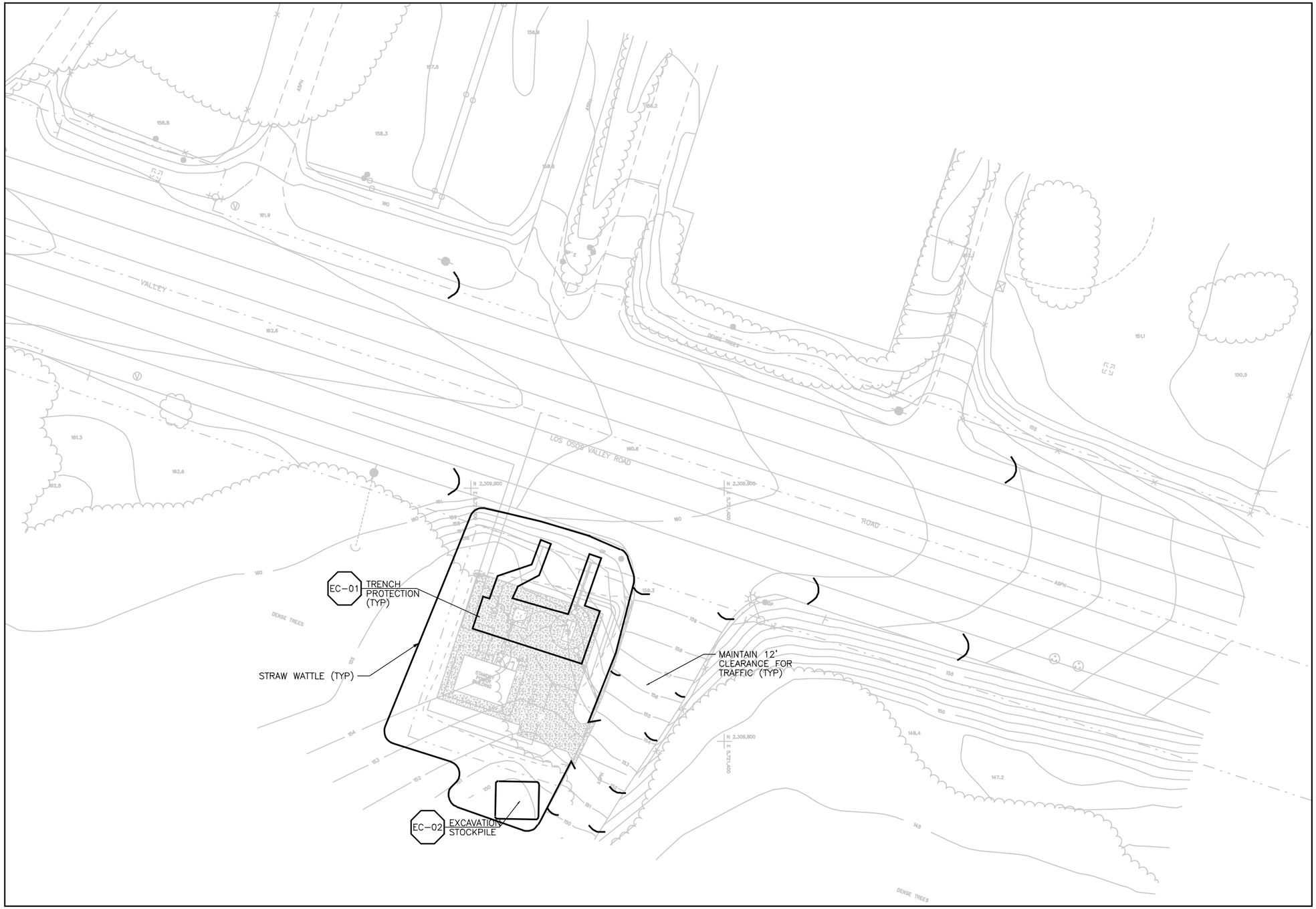

SUNNY OAKS SITE

EROSION CONTROL NOTES:

1. DURING CONSTRUCTION THE CONTRACTOR MUST DIRECT ALL RUNOFF TO NON ERODIBLE LOCATIONS
2. A STANDBY CREW FOR EMERGENCY WORK SHALL BE AVAILABLE AT ALL TIMES DURING THE RAINY SEASON. NECESSSARY MATERIALS SHALL BE AVAILABLE AND STOCKPILLED AT CONVENIENT LOCATIONS TO FACILITATE RAPID CONSTRUCTION OF TEMPORARY DEVICES WHEN RAIN IS IMMINENT.
3. THE CONTRACTOR SHALL CONTROL TEMPORARY EROSION CONTROL MEASURES AS SHOWN ON THIS PLAN AND/OR AS DIRECTED BY THE ENGINEER TO CONTROL DRAINAGE WHICH HAS BEEN AFFECTED BY GRADING AND/OR TRENCHING OPERATIONS.
4. ALL PERMANENT SLOPES AND DISTURBED AREAS SHALL BE PLANTED FOR EROSION CONTROL WITH APPROVED PERENNIAL VEGETATION WHICH SHALL BE DENSE AND GROWING PRIOR TO FINAL ACCEPTANCE (SEE THE HYDROSEEDING SPECIFICATION).
5. ALL PROTECTIVE DEVICES TO BE INSTALLED SHALL BE IN PLACE AT THE END OF EACH WORK DAY WHEN THE FIVE-DAY RAIN PROBABILITY EXCEEDS 40 PERCENT.
6. AFTER A RAINSTORM, ALL SILT AND DEBRIS SHALL BE REMOVED FROM CHECK BERMS AND SEDIMENTATION BASIN AND THE BASIN PUMPED DRY.
7. THE CONTRACTOR MAY BE REQUIRED TO INSTALL AND/OR CONSTRUCT ADDITIONAL DRAINAGE STRUCTURES AS NECESSARY TO PREVENT OR CONTROL EROSION.
8. THE CONTRACTOR IS RESPONSABLE FOR CLEANING ANY EROSION OR DEBRIS SPILLING ONTO A PUBLIC STREET.
9. NO CUT OR FILL SLOPES SHALL BE STEEPER THAN 2' HORIZONTAL TO 1' VERTICAL.
10. ALL STRAW WATTLES TO BE INSTALLED PARALLEL TO GRADING CONTOURS.
11. ALSO SEE SEC. 01570 STORM WATER POLLUTION PREVENTION PLAN.

REGISTERED PROFESSIONAL ENGINEER
LINDA L. TRIPP
No. C 48027
Exp. 12-31-05
CIVIL
STATE OF CALIFORNIA

REV	DATE	BY	DESCRIPTION

SCALE: 1"=20'

WARNING: 0 1/2 1 — IF THIS BAR DOES NOT MEASURE 1" THEN DRAWING IS NOT TO SCALE

DESIGNED M RACKOW
DRAWN M RACKOW
CHECKED S HYLAND

SUBMITTED BY
JOHN A. BERGEN — C31069 LICENSE NO. — 2/16/2004 DATE
STEVE J. HYLAND — C23892 LICENSE NO. — 2/16/2004 DATE

DIGALERT — DIAL TOLL FREE 1-800-642-2444 AT LEAST TWO DAYS BEFORE YOU DIG — UNDERGROUND SERVICE ALERT OF NORTHERN CALIFORNIA

LOS OSOS COMMUNITY SERVICES DISTRICT

MWH Walnut Creek, California

LOS OSOS WASTEWATER PROJECT
CIVIL
EROSION CONTROL PLAN

SHEET C-C-202

Job No: 1481166 File: N:\Projects\los_osos\Collect_Sys\PS\civ\C-C-202.dgn Plot Date: 09-FEB-2004 12:24

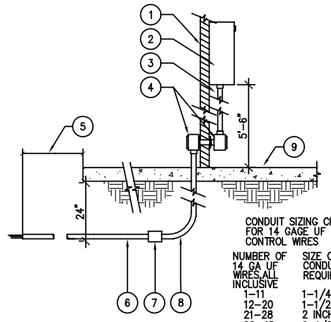

LEGEND:

1. EXTERIOR WALL OF BUILDING
2. CONTROLLER, PER IRRIGATION LEGEND. INSTALL PER MFG. INSTRUCTIONS.
3. 24V CONTROL WIRES IN RIGID STEEL CONDUIT, TYPICAL.
4. PAIRED METAL THREADED WEATHER PROOF CONDUITS CONNECTED THROUGH WALL WITH RIGID STEEL CONDUIT. SEAL AROUND CONDUIT INSIDE AND OUTSIDE WITH AN APPROVED SILICONE SEALANT.
5. 24" MIN. BEYOND FACE OF BLDG. OR EDGE OF PAVING.
6. SCH. 40 PVC CONDUIT
7. TxS PVC ADAPTER
8. PVC COATED GALV. LONG SWEEP ELL
9. FINISH FLOOR OF BLDG.

CONDUIT SIZING CHART FOR 14 GAGE UF CONTROL WIRES

NUMBER OF 14 GA UF WIRES, ALL INCLUSIVE	SIZE OF CONDUIT REQUIRED
1–11	1–1/4 INCH
12–20	1–1/2 INCH
21–28	2 INCH
29–45	2–1/2 INCH
46–60	3 INCH

NOTES:

1. CONDUIT DIAMETER SHALL BE PER SIZING CHART ABOVE. ENLARGE HOLE IN THE BOTTOM OF THE IRRIGATION CONTROLLER AS NECESSARY TO ACCOMODATE A LINE SIZED BUSHING. 120V POWER SOURCE SHALL BE AS SHOWN ON THE LANDSCAPE OR ELECTRICAL PLANS.

K WALL MOUNT CONTROLLER

NTS

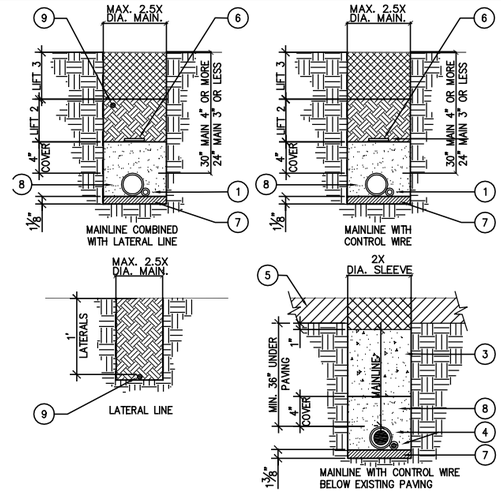

LEGEND:

1. POSITION CONTROL WIRES IN LOWER LEFT OR RIGHT HAND QUADRANT OF MAINLINE.
2. TAPE WIRE AT 10' INTERVALS; DO NOT SECURE TO MAINLINE.
3. MATCH TYPE AND GRADE OF EXISTING PAVING TO SACK SLURRY BACKFILL
4. MAINLINE AND CONTROL WIRES, EACH IN SCH. 40 P.V.C. SLEEVE
5. EXISTING PAVING
6. TRACER TAPE
7. SAND BED
8. SAND COVER
9. LATERAL LINE

NOTES:

1. PIPE BEDDING AND BACKFILL SHALL BE WATER JETTED TO ACHIEVE PROPER DENSIFICATION.
2. PIPE AND CONTROL WIRE CROSSING VECHICULAR ROADWAY SHALL BE SLEEVED AS INDICATED ABOVE.
3. IRRIGATION SLEEVE: TWO PIPE SIZES LARGER THAN WATER PIPE SIZE.

G TRENCHING DETAIL

NTS

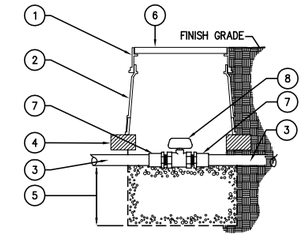

LEGEND:

1. 3–1/2" EXTENSION FOR 12" METER BOX.
2. 12" METER BOX.
3. PVC PRESSURE MAINLINE PIPE – 1–1/2" OR LESS USE SCHEDULE 40, 2" OR GREATER USE CLASS 315. SEE PLAN FOR SIZES.
4. COMMON BRICK, ONE AT EACH CORNER FOR SUPPORT.
5. 12" DEEP, 3/4" "FLOAT ROCK" UNDER VALVE.
6. COVER WITH PENT LOCK. SET FLUSH WITH FINISH GRADE.
7. SCHEDULE 40 PVC MALE ADAPTER.
8. PVC BALL VALVE, SEE PLAN FOR SIZE AND TYPE.

C BALL VALVE

NTS

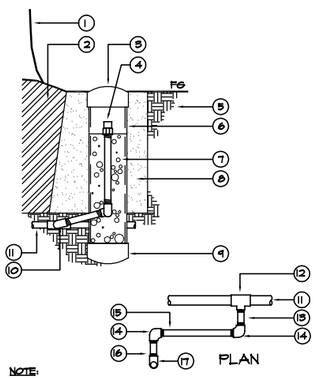

LEGEND:

1. TREE TRUNK
2. ROOTBALL
3. 6" P.V.C. DRAIN LINE CAP AT FINISH GRADE
4. BUBBLER NOZZLE (ABOVE ROCK) ON RISER
5. SITE SOIL
6. 6" PERFORATED P.V.C. DRAINLINE PIPE SEALED INSIDE SOIL SEPARATOR FABRIC
7. 1/2"–3/4" WASHED, CRUSHED ROCK
8. TREE BACKFILL, SEE PLANTING DETAILS
9. 6" P.V.C. DRAINLINE CAP AT BOTTOM OF PIPE
10. SWING JOINT, SEE PLAN BELOW
11. LATERAL LINE
12. SCH. 40 P.V.C TEE SxSxT
13. 3/4" DIA. x 3" SCH. 80 P.V.C THREADED NIPPLE
14. SCH. 80 P.V.C. ELL
15. 3/4" DIA. SCH. 80 PVC NIPPLE, 12" LONG
16. 3/4" DIA. x 3" SCH. 80 PVC NIPPLE
17. TREE BUBBLER

NOTE:

1. USE PIPE TEFLON TAPE ON ALL PIPE THREADS. TIGHTEN THEADS UNTIL MODERATELY SNUG (DO NOT OVERTIGHTEN).

J DEEP ROOT TREE BUBBLER

NTS

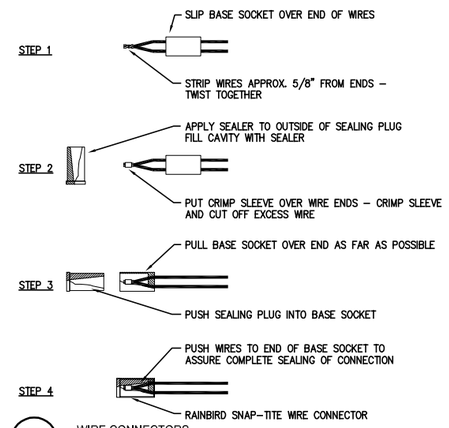

F WIRE CONNECTORS

NTS

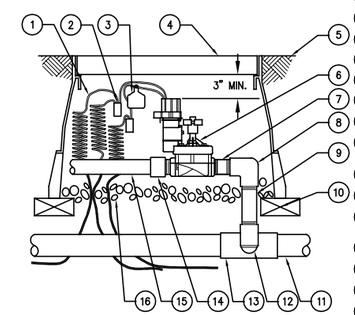

LEGEND

1. 30–INCH LINEAR LENGTH OF WIRE, COILED
2. WATER PROOF CONNECTION (1 OF 2)
3. ID TAG
4. VALVE BOX WITH COVER: 12" SIZE
5. FINISH GRADE/TOP OF MULCH
6. PVC REMOTE CONTROL VALVE
7. PVC SCH 80 NIPPLE (CLOSE)
8. PVC SCH 40 ELL
9. PVC SCH 80 NIPPLE (LENGTH AS REQUIRED)
10. BRICK (1 OF 4)
11. PVC MAINLINE PIPE
12. SCH 80 NIPPLE (2–INCH LENGTH, HIDDEN) AND SCH 40 ELL
13. PVC SCH 40 TEE OR ELL
14. PVC SCH 40 MALE ADAPTER
15. PVC LATERAL PIPE
16. 3–INCH MINIMUM DEPTH OF 3/4–INCH WASHED GRAVEL

E PRESSURE REGULATING REMOTE CONTROL VALVE

NTS

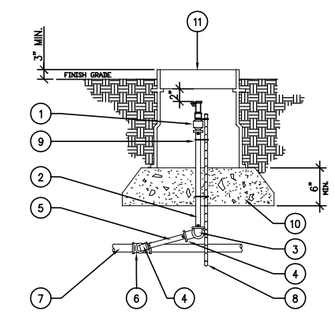

LEGEND

1. QUICK COUPLER VALVE
2. SCHEDULE 80 NIPPLE.
3. SCH. 40 PVC 90 ELL.
4. MARLEX 90 STREET ELL (2) PLACES.
5. SCHEDULE 80 NIPPLE 6" LONG.
6. PRESSURE SUPPLY LINE FITTING.
7. PRESSURE SUPPLY LINE.
8. #4 REBAR STAKE 24" LONG
9. STAINLESS STEEL SCREW CLAMP MIN. (3) PLACES.
10. 3/4" WASHED CRUSHED AGGREGATE BASE.
11. VALVE BOX W/ LOCKING COVER
12. COMPACT SOIL @ BOX TO 90% REL COMP.

NOTE:

1. PLACE AGGREGATE PRIOR TO INSTALLATION OF VALVE BOX.

B QUICK COUPLER

NTS

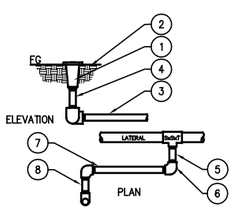

LEGEND:

1. POP–UP SPRAY HEAD
2. COMPACT SOIL @ EA. HEAD TO 90% REL. COMP.
3. 3" SCH. 80 PVC NIPPLE
4. SWING JOINT, SEE PLAN BELOW
5. 1/2" DIA. x 3" SCH. 80 P.V.C. THREADED NIPPLE
6. 1/2" THREADED SCH 40 ELL, 3 PLACES REQUIRED
7. 1/2" DIA. x 12" SCH. 80 PVC NIPPLE
8. 1/2" DIA. x 3" SCH. 80 PVC NIPPLE

NOTES:

1. PLACE ALL HEADS 1/4" ABOVE FINISH GRADE AT INITIAL INSTALLATION. SET HEADS 3" AWAY FROM WALKS, CURBS, OR MOW STRIPS.
2. ALL PIPE THREADS ON SWING JOINT SHALL BE COATED WITH RECTORSEAL T PLUS 2 TEFLON PIPE COMPOUND OR APPROVED EQUAL BEFORE ASSEMBLY.

H POP-UP SPRAY HEAD

NTS

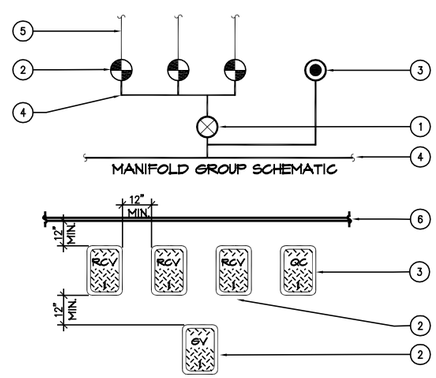

LEGEND:

1. BALL VALVE, LINE SIZED, TYPICAL, SEE DETAIL.
2. REMOTE CONTROL VALVE, LINE SIZED, TYPICAL, SEE DETAIL.
3. QUICK COUPLER, LINE TO QUICK COUPLER SHOULD BE 1 1/2", TYPICAL, SEE DETAIL.
4. MAIN LINE, SIZE OF MAIN LINE SHALL EQUAL VALVE SIZE, TYPICAL.
5. LATERAL LINE, SIZE OF LATERAL LINE SHALL EQUAL VALVE SIZE, TYPICAL.
6. EDGE OF WALK, CURB, WALL ETC.

NOTES:

1. ALL VALVES SHALL BE RUN OFF A MANIFOLD GROUP SIMILAR TO THAT SHOWN IN ABOVE SHEMATIC.
2. ALL BOXES SHALL BE SQUARE TO ONE ANOTHER, AND TO EDGES OF ADJACENT FIXED OBJECTS.
3. ALL VALVE BOXES SHALL BE SET FLUSH TO FINISH GRADE.
4. WHERE 2 VALVES ARE TO OPERATED SIMULTANEOUSLY, SIZE MAIN LINES WITHIN MANIFOLD GROUP TO 3", UNLESS LARGER SIZE IS REQUIRED FOR VALVE OPERATION.

D VALVE BOX LAYOUT

NTS

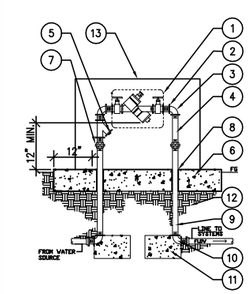

LEGEND

1. BACKFLOW PREVENTOR ASSEMBLY
2. BRASS NIPPLE – TYPICAL 3) PLACES
3. BRASS 90° ELL – TYPICAL (2) PLACES
4. BRASS NIPPLE
5. BRASS WYE STRAINER WITH 20 MESH STAINLESS STEEL SCREEN.
6. 12" THICK x 12" WIDE CONCRETE PAD (LENGTH VARIES PER MANUFACTURER) SLOPE TO DRAIN AT MINIMUM 2%.
7. BRASS UNION–TYP. (2) PLACES
8. SLEEVE THRU CONCRETE, 2 PLACES
9. BRASS NIPPLE – TYPICAL. (2) PLACES
10. BRASS 90 ELL – TYPICAL (2) PLACES
11. 1/3 CU YD CONCRETE THRUST BLOCKS – TYPICAL (2) PLACES
12. 90% COMPACTION REQUIRED
13. BACKFLOW PREVENTOR METAL ENCLOSURE PER CITY STANDARDS

NOTES:

1. EQUIPMENT TO BE INSTALLED AT A MINIMUM OF 24" FROM ANY STRUCTURES OR HARDSCAPING.
2. ALL ABOVE GROUND ASSEMBLY SHALL RECEIVE (2) COATS OR RED PRIMER AND (1) COAT EXTERIOR ENAMEL – COLOR AS SELECTED BY LANDSCAPE ARCHITECT.
3. WHEN UNIT IS NEXT TO A STRUCTURE (ie. WALL, BUILDING, ETC.) MOUNT TEST COCKS ON OPEN OR NON–STRUCTURE SIDE.

A BACKFLOW PREVENTOR ASSEMBLY WITH ENCLOSURE

NTS

LICENSED LANDSCAPE ARCHITECT
ANTHONY KEITH NO. 3823
10/31/04
Date
STATE OF CALIFORNIA

REV	DATE	BY	DESCRIPTION

SCALE: VARIES

WARNING: 0 1/2 1 — IF THIS BAR DOES NOT MEASURE 1" THEN DRAWING IS NOT TO SCALE

DESIGNED TK/CD
DRAWN C. DUFOUR
CHECKED T.KEITH

SUBMITTED BY
C31069 — LICENSE NO. — 2/16/2004 — DATE
C23892 — LICENSE NO. — 2/16/2004 — DATE

DIGALERT — DIAL TOLL FREE 1-800-642-2444 AT LEAST TWO DAYS BEFORE YOU DIG — UNDERGROUND SERVICE ALERT OF NORTHERN CALIFORNIA

LOS OSOS COMMUNITY SERVICES DISTRICT

MWH Walnut Creek, California

RRM DESIGN GROUP — Creating Environmental Profit Strategies — 3765 South Higuera Street, Suite 102 • San Luis Obispo, California 93401 • Phone 805/543-1351 • Fax 805/543-9397 • mail@rrmdesign.com

LOS OSOS WASTEWATER PROJECT
LANDSCAPING
IRRIGATION DETAILS

SHEET BC–GL–200

N:\2002\1002008 Los Osos WWTF\Planning\product\Pump Stations\autocad\100%submittal\irrigation\10202080_ps.dwg, BC-GL-200, Feb 06, 2004 4:34pm, CBDufour

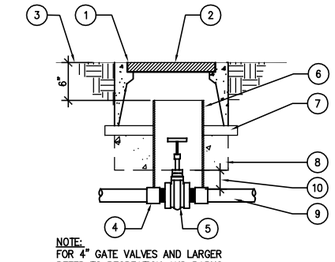

NOTE:
FOR 4" GATE VALVES AND LARGER REFER TO RECREATION AND PARKS DETAILS #130 AND #131.

LEGEND

1. SET VALVE BOX FLUSH WITH FINISH GRADE
2. CONCRETE VALVE BOX WITH CAST IRON LOCKING COVER EMBOSSED "G.V." PER NOTICE TO CONTRACTORS.
3. FINISH GRADE
4. SCHEDULE 40 P.V.C. MALE ADAPTER AT EACH SIDE OF GATE VALVE
5. LINE SIZED GATE VALVE
6. 8" ø P.V.C. SLEEVE 18" LONG
7. (2) 2"x4"x24" RECYCLED PLASTIC SUPPORT BLOCKS UNDER THE LONG AXIS OF THE VALVE BOX. AVAILABLE FROM EXP PROD., 800-775-2784.
8. 1-1/2 CUBIC FEET OF 3/4" GRAVEL
9. MAIN LINE
10. KEEP GRAVEL 3 INCHES CLEAR OF MAIN LINE

C GATE VALVE

NTS

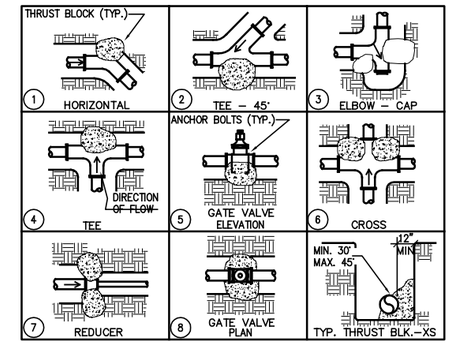

NOTES:
1. PLASTIC PIPE SHALL BE INSTALLED ACCORDING TO THESE DETAILS UNLESS OTHERWISE NOTED OR DETAILED.
2. THE PORTLAND CEMENT CONCRETE USED FOR THRUST BLOCKS SHALL BE MIN. 470-B-2000D CONC.
3. ALL ANCHOR RODS SHALL BE GALVANIZED STEEL MIN. 1/2" INCH IN DIAMETER.
4. SIZE OF THRUST BLK.: 4" PIPE = 4 CU. FT. CONC., 6" PIPE = 6 CU. FT., 8" PIPE = 8 CU. FT.
5. WRAP ALL EPOXY COATED FITTINGS WITH SIX MIL PLASTIC BEFORE POURING THRUST BLOCKS.
6. POOR SOIL CONDITIONS : USE THRUST BLOCKS FOR 3" PIPE AT SIZE SHOWN FOR 4" PIPE.
7. ALL THRUST BLOCKS SHALL BEAR AGAINST UNDISTURBED SOIL.

B THRUST BLOCK

NTS

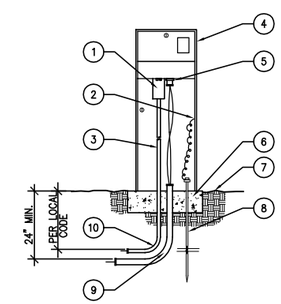

NOTE: ALL WIRING TO BE INSTALLED AS PER LOCAL CODE

LEGEND

1. 120V POWER AND GROUND CONNECTION DISCONNECT SWITCH, SURGE PROTECTOR, & CONVENIENCE OUTLET
2. CONNECT TO PROTECTIVE GROUNDING CIRCUIT
3. 3/4" PVC CONDUIT FOR ELECTRICAL SERVICE
4. CONTROLLER & ENCLOSURE
5. CONTROL & COMMON WIRE CONNECTIONS, OR PROVIDE TERMINATING STRIP, IN PEDESTAL
6. 6" THICK CONC. BASE PER MANUFACTURER'S RECOMMENDATION
7. FINISH GRADE CONC. SLAB
8. 3/4"x 8' LONG COPPER CLAD GROUND ROD W/ #6 BARE COPPER WIRE CONNECTED TO ROD BY ACORN-CLAMP
9. (2) 3" 90° SWEEP ELL FOR IRRIGATION CONTROL WIRES
10. 90° PVC SWEEP ELL

A PEDESTAL MOUNTED CONTROLLER

NTS

LICENSED LANDSCAPE ARCHITECT
ANTHONY KEITH NO. 3823
10/31/04
Date
STATE OF CALIFORNIA

REV	DATE	BY	DESCRIPTION

SCALE: VARIES

WARNING: 0 1/2 1 — IF THIS BAR DOES NOT MEASURE 1" THEN DRAWING IS NOT TO SCALE

DESIGNED TK/CD
DRAWN C. DUFOUR
CHECKED T.KEITH

SUBMITTED BY
C31069 LICENSE NO. 2/16/2004 DATE
C23892 LICENSE NO. 2/16/2004 DATE

DIGALERT — DIAL TOLL FREE 1-800-642-2444 AT LEAST TWO DAYS BEFORE YOU DIG — UNDERGROUND SERVICE ALERT OF NORTHERN CALIFORNIA

LOS OSOS COMMUNITY SERVICES DISTRICT

MWH Walnut Creek, California

RRM DESIGN GROUP — Creating Environmental Planning

LOS OSOS WASTEWATER PROJECT
LANDSCAPING
IRRIGATION DETAILS

SHEET BC-GL-201

N:\2002\1002008 Los Osos WWTP\Planning\product\Pump Stations\autocad\100%submittal\irrigation\1002008D_ps.dwg, BC-GL-201, Feb 06, 2004 4:34pm, CBDufour

REVEGETATIVE PLANT MIX 'A' (SEE BRODERSON EDS PLANTING PLANS FOR LOCATION)

SYMBOL	BOTANICAL NAME	COMMON NAME	SIZE	DISBURSEMENT /32'-6"X32'-6" PLOT	REMARKS
	CAREX PRAEGRACILIS	CLUSTERED FIELD SEDGE	1 GALLON	5	APPROXIMATE SPACING 18" O.C.
	ENCELIA CALIFORNICA	ENCELIA	1 GALLON	7	APPROXIMATE SPACING 4' O.C.
	HAPLOPAPPUS SQUAROSSUS	YELLOW SQUIRREL COVER	1 GALLON	5	APPROXIMATE SPACING 3' O.C.
	LESSINGIA FILAGINOFOLIA	CALIFONIA ASTER	1 GALLON	8	APPROXIMATE SPACING 2' O.C.
	LUPINUS CHAMISSONIS	SILVER DUNE LUPINE	1 GALLON	8	APPROXIMATE SPACING 4' O.C.
	MIMULUS AURANTIACUS	MONKEYFLOWER	1 GALLON	25	APPROXIMATE SPACING 3' O.C.
	RIBES SPECIOSUM	FUSCHIA-FLOWERED GOOSEBERRY	1 GALLON	5	APPROXIMATE SPACING 3' O.C.
	SALVIA APIANA	WHITE SAGE	1 GALLON	5	APPROXIMATE SPACING 4' O.C.
	SALVIA LEUCOPHYLLA	PURPLE SAGE	1 GALLON	7	APPROXIMATE SPACING 3' O.C.
	SALVIA MELLIFERA	BLACK SAGE	1 GALLON	25	APPROXIMATE SPACING 3' O.C.

REVEGETATIVE PLANT MIX 'B' (SEE BRODERSON EDS PLANTING PLANS FOR LOCATION)

SYMBOL	BOTANICAL NAME	COMMON NAME	SIZE	DISBURSEMENT /32'-6"X32'-6" PLOT	REMARKS
	ARTEMESIA CALIFORNICA	CALIFORNIA SAGEBRUSH	1 GALLON	10	APPROXIMATE SPACING 4' O.C.
	BACCHARIS PILULARIS	COYOTE BRUSH	1 GALLON	10	APPROXIMATE SPACING 4' O.C.
	CAREX PRAEGRACILIS	CLUSTERED FIELD SEDGE	1 GALLON	5	APPROXIMATE SPACING 18" O.C.
	ENCELIA CALIFORNICA	ENCELIA	1 GALLON	7	APPROXIMATE SPACING 4' O.C.
	ERIGONIUM PARVIFOLIUM	CLIFF BUCKWHEAT	1 GALLON	10	APPROXIMATE SPACING 2' O.C.
	HAPLOPAPPUS SQUAROSSUS	YELLOW SQUIRREL COVER	1 GALLON	5	APPROXIMATE SPACING 3' O.C.
	LESSINGIA FILAGINOFOLIA	CALIFONIA ASTER	1 GALLON	8	APPROXIMATE SPACING 2' O.C.
	LUPINUS CHAMISSONIS	SILVER DUNE LUPINE	1 GALLON	8	APPROXIMATE SPACING 4' O.C.
	MIMULUS AURANTIACUS	MONKEYFLOWER	1 GALLON	10	APPROXIMATE SPACING 3' O.C.
	RIBES SPECIOSUM	FUSCHIA-FLOWERED GOOSEBERRY	1 GALLON	5	APPROXIMATE SPACING 3' O.C.
	SALVIA APIANA	WHITE SAGE	1 GALLON	5	APPROXIMATE SPACING 4' O.C.
	SALVIA LEUCOPHYLLA	PURPLE SAGE	1 GALLON	7	APPROXIMATE SPACING 3' O.C.
	SALVIA MELLIFERA	BLACK SAGE	1 GALLON	10	APPROXIMATE SPACING 3' O.C.

D REVEGETATIVE PLANT MIX INSTALLATION

SCALE: 1"=20'-0"

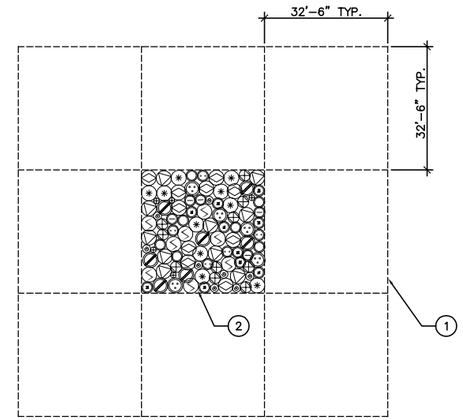

SAMPLE PLANT SPECIES DISBURSEMENT PLAN

LEGEND:

1. PROVIDE TEMPORARY 32'-6"X32'-6" GRID @ EFFLUENT DISPOSAL SITE FOR DISBURSEMENT OF PLANT SPECIES. SEE BRODERSON EDS PLANTING PLANS, SHEETS C-L-206 THRU C-L-209 FOR GRID LAYOUT
2. SAMPLE PLANT SPECIES DISBURSEMENT WITHIN 32'-6"X32'-6" PLOT

NOTES:

1. SAMPLE PLANT SPECIES DISBURSEMENT HAS BEEN PROVIDED FOR CONVENIENCE OF CONTRACTOR ONLY. CONTRACTOR SHALL BE RESPONSIBLE TO PROVIDE THE QUANTITY OF PLANTS SHOWN AT THE APPROXIMATE SPACING NOTED.
2. CONTRACTOR SHALL PROVIDE EVEN DISBURSEMENT OF PLANT SPECIES THROUGHOUT 32'-6"X32'-6" PLOTS.
3. CONTRACTOR SHALL PROVIDE ONE (1) 32'-6"X32'-6" MOCK-UP OF PLANT SPECIES DISBURSEMENT IN FIELD FOR APPROVAL OF THE LANDSCAPE ARCHITECT PRIOR TI THE INSTALLATION OF ALL PLANTS
4. PLANTS SHALL BE MADE AVAILABLE BY CONTRACT GROW, CONTACT LOS OSOS COMMUNITY SERVICES DISTRICT FOR INFORMATION

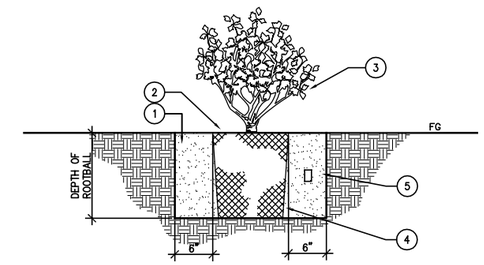

LEGEND:

1. PLANTING HOLES. 1, 5, AND 15 GALLON SHRUBS SHALL BE 6" WIDER THAN WIDTH OF CONTAINER AND THE SAME DEPTH. SET ROOT BALL ON NATURAL UNDISTURBED GRADE. BACKFILL WITH AMENDED SOIL.
2. TOP OF ROOT BALL SHALL BE SET FLUSH TO FINISH GRADE
3. SHRUB
4. CONTAINER ROOT BALL
5. FERTILIZER PACK, QUANTITY PER SPECIFICATIONS.

B SHRUB PLANTING

SCALE: 1"=1'-0"

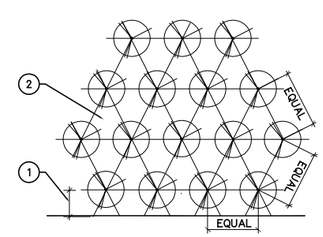

LEGEND:

1. 1/2 SPACING FROM EDGE OF WALK, BACK OF CURB, OR BUILDING FACE
2. GROUND COVER SHALL BE TRIANGULAR SPACED PER O.C. SPACING ON PLANTING LEGEND AND/OR PLANTING PLAN

C TRIANGULAR GROUNDCOVER PLANTING

SCALE: 1"=1'-0"

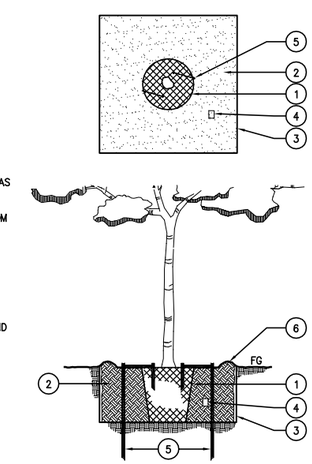

LEGEND:

1. TREE ROOTBALL
2. BACKFILL MIX, TAMP FIRMLY
3. PLANT PIT SHALL BE TWICE THE WIDTH OF THE TREE ROOTBALL, AS INDICATED. SET ROOTBALL ON NATURAL GRADE AT BOTTOM OF PIT, PLUMB TO GRADE AT BOTTOM OF PIT, AMENDED SOIL.
4. FERTILIZER PACK
5. 'TREE STAPLE' SYSTEM, TWO (2) PER TREE. INSTALL PER MANUFACTURER'S INSTRUCTIONS
6. PROVIDE CIRCULAR BASIN AROUND PLANT PIT, 3" HEIGHT MINIMUM

A TREE PLANTING

SCALE: 1/2"=1'-0"

LICENSED LANDSCAPE ARCHITECT
ANTHONY KEITH NO. 1872
10/31/04
Date
STATE OF CALIFORNIA

REV	DATE	BY	DESCRIPTION

SCALE: VARIES

WARNING: 0 1/2 1 — IF THIS BAR DOES NOT MEASURE 1" THEN DRAWING IS NOT TO SCALE

DESIGNED TK/BMO
DRAWN B.OSBORN
CHECKED T.KEITH

SUBMITTED BY
C31069 LICENSE NO. 2/16/2004 DATE
C23892 LICENSE NO. 2/16/2004 DATE

DIGALERT — DIAL TOLL FREE 1-800-642-2444 AT LEAST TWO DAYS BEFORE YOU DIG — UNDERGROUND SERVICE ALERT OF NORTHERN CALIFORNIA

LOS OSOS COMMUNITY SERVICES DISTRICT

MWH Walnut Creek, California

RRM DESIGN GROUP — Creating Environmental Physical Space

LOS OSOS WASTEWATER PROJECT
LANDSCAPING
PLANTING DETAILS

SHEET BC-GL-202

N:\2002\1002008 Los Osos WWTF\Planning\product\Pump Stations\autocad\100208submittal\planting\100208PD_ps.dwg, BC-GL-202, Feb 06, 2004 4:51pm, BMOsborn

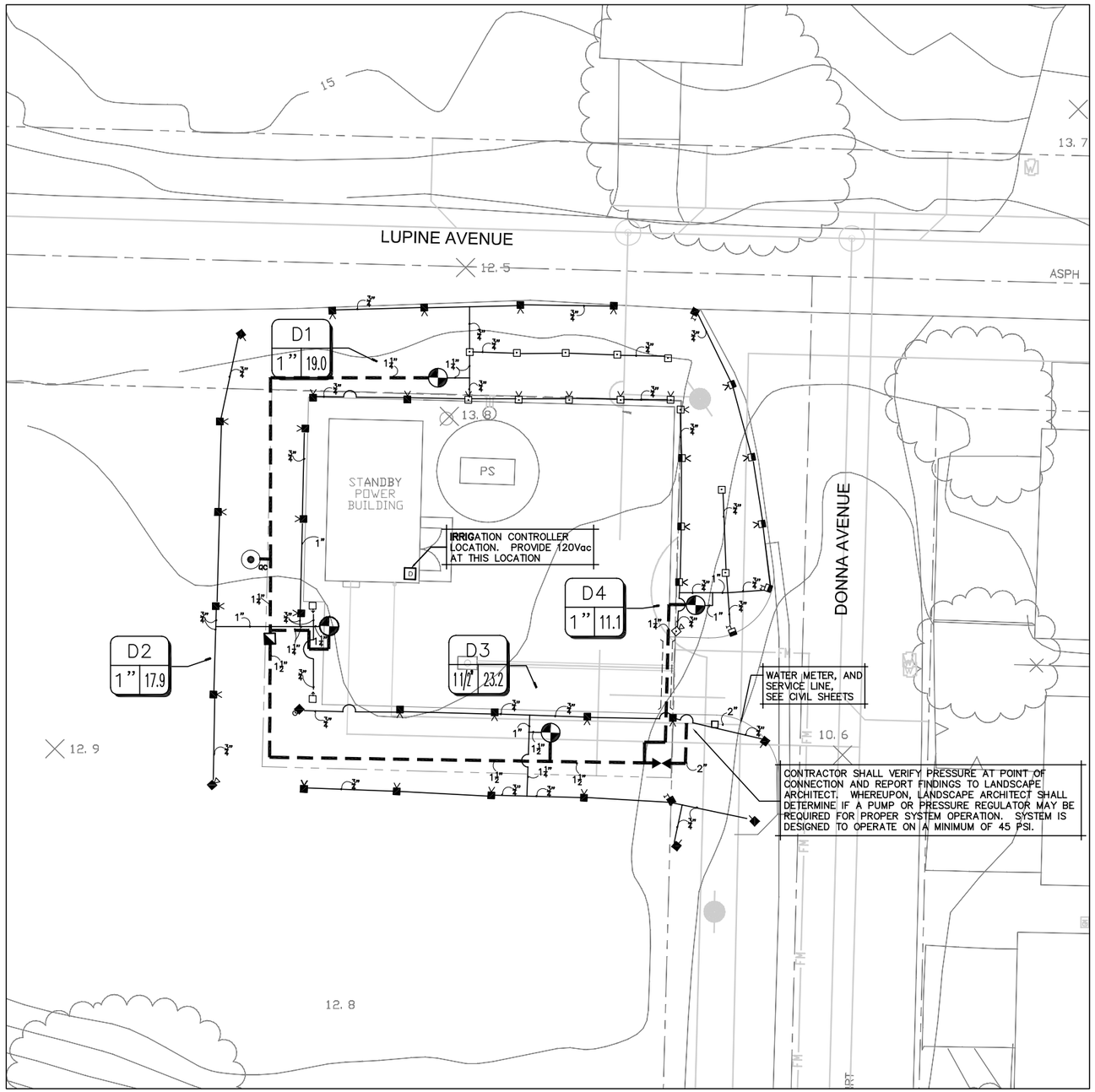

LUPINE PUMP STATION

SCALE: 1" = 10'

IRRIGATION LEGEND

SYMBOL	MANUF.	MODEL NO.	DESCRIPTION	NOZZLE	RAD.	G.P.M.	P.S.I.	REMARKS/ DETAIL
SPRAYS								
	RAINBIRD	1806-SAM	6" POP-UP SPRAY HEAD	15F	15'	3.7	30	SEE DETAIL H, SHEET BC-GL-200
TQ	RAINBIRD	1806-SAM	6" POP-UP SPRAY HEAD	15TQ	15'	2.78	30	SEE DETAIL H, SHEET BC-GL-200
TT	RAINBIRD	1806-SAM	6" POP-UP SPRAY HEAD	15TT	15'	2.48	30	SEE DETAIL H, SHEET BC-GL-200
H	RAINBIRD	1806-SAM	6" POP-UP SPRAY HEAD	15H	15'	1.85	30	SEE DETAIL H, SHEET BC-GL-200
T	RAINBIRD	1806-SAM	6" POP-UP SPRAY HEAD	15T	15'	1.23	30	SEE DETAIL H, SHEET BC-GL-200
Q	RAINBIRD	1806-SAM	6" POP-UP SPRAY HEAD	15Q	15'	.92	30	SEE DETAIL H, SHEET BC-GL-200
VAN	RAINBIRD	1806-SAM	6" POP-UP SPRAY HEAD	15 VAN	15'	VARIES	30	SEE DETAIL H, SHEET BC-GL-200
	RAINBIRD	1806-SAM	6" POP-UP SPRAY HEAD	12F	12'	2.6	30	SEE DETAIL H, SHEET BC-GL-200
TQ	RAINBIRD	1806-SAM	6" POP-UP SPRAY HEAD	12TQ	12'	1.95	30	SEE DETAIL H, SHEET BC-GL-200
TT	RAINBIRD	1806-SAM	6" POP-UP SPRAY HEAD	12TT	12'	1.74	30	SEE DETAIL H, SHEET BC-GL-200
H	RAINBIRD	1806-SAM	6" POP-UP SPRAY HEAD	12H	12'	1.3	30	SEE DETAIL H, SHEET BC-GL-200
T	RAINBIRD	1806-SAM	6" POP-UP SPRAY HEAD	12T	12'	.87	30	SEE DETAIL H, SHEET BC-GL-200
Q	RAINBIRD	1806-SAM	6" POP-UP SPRAY HEAD	12Q	12'	.65	30	SEE DETAIL H, SHEET BC-GL-200
VAN	RAINBIRD	1806-SAM	6" POP-UP SPRAY HEAD	12 VAN	12'	VARIES	30	SEE DETAIL H, SHEET BC-GL-200
	RAINBIRD	1806-SAM	6" POP-UP SPRAY HEAD	10 F	10'	1.58	30	SEE DETAIL H, SHEET BC-GL-200
H	RAINBIRD	1806-SAM	6" POP-UP SPRAY HEAD	10 H	10'	.79	30	SEE DETAIL H, SHEET BC-GL-200
T	RAINBIRD	1806-SAM	6" POP-UP SPRAY HEAD	10T	10'	.53	30	SEE DETAIL H, SHEET BC-GL-200
Q	RAINBIRD	1806-SAM	6" POP-UP SPRAY HEAD	10Q	10'	.39	30	SEE DETAIL H, SHEET BC-GL-200
VAN	RAINBIRD	1806-SAM	6" POP-UP SPRAY HEAD	10 VAN	10'	VARIES	30	SEE DETAIL H, SHEET BC-GL-200
	RAINBIRD	1806-SAM	6" POP-UP SPRAY HEAD	8F	8'	1.05	30	SEE DETAIL H, SHEET BC-GL-200
H	RAINBIRD	1806-SAM	6" POP-UP SPRAY HEAD	8H	8'	.52	30	SEE DETAIL H, SHEET BC-GL-200
T	RAINBIRD	1806-SAM	6" POP-UP SPRAY HEAD	8T	8'	.35	30	SEE DETAIL H, SHEET BC-GL-200
Q	RAINBIRD	1806-SAM	6" POP-UP SPRAY HEAD	8Q	8'	.26	30	SEE DETAIL H, SHEET BC-GL-200
VAN	RAINBIRD	1806-SAM	6" POP-UP SPRAY HEAD	8 VAN	8'	VARIES	30	SEE DETAIL H, SHEET BC-GL-200
	RAINBIRD	1806-SAM	6" POP-UP SPRAY HEAD	15-SST	4'x30'	1.21	30	SEE DETAIL H, SHEET BC-GL-200
	RAINBIRD	1806-SAM	6" POP-UP SPRAY HEAD	15-EST	4'x15'	0.61	30	SEE DETAIL H, SHEET BC-GL-200
BUBBLERS								
	RAINBIRD	RWS-B-G	TREE ROOT BUBBLER	1402	N/A	0.5	30	SEE DETAIL J, SHEET BC-GL-200
VALVES								
	RAINBIRD	PEB SERIES (INCLUDE PRS DIAL)	PRESSURE REGULATED R.C. VALVE					SEE DETAIL D & E, SHEET BC-GL-200
	RAINBIRD	44 LRC	1" QUICK COUPLING VALVE					SEE DETAIL B, SHEET BC-GL-200
	KBI	BTU SERIES	TRUE UNION BALL VALVE					SEE DETAIL C, SHEET BC-GL-200
BACKFLOW DEVICE								
	FEBCO	825YA	1 1/4" BACKFLOW PREVENTOR					SEE DETAIL A, SHEET BC-GL-200
MAIN LINE/ LATERALS & SLEEVES								
	SEE SPECS	SEE SPECS	SCH. 40 PVC MAIN LINE.					SEE PLAN FOR SIZING. SEE DETAIL G, SHEET BC-GL-200
	SEE SPECS	SEE SPECS	SCH 40 PVC SLEEVE					TWO TIMES THE SIZE THE PIPE DIAMETER. SEE DETAIL G, SHEET BC-GL-200
CONTROLLERS								
D	RAINBIRD	ESP-12-RK-LS	12 STA. WALL MOUNT SATELLITE CONTROLLER					SEE DETAIL K, SHEET BC-GL-200

IRRIGATION NOTES

1. SEE SPECIAL & STANDARD SPECIFICATIONS FOR INSTRUCTIONS, APPLICATION, PROCEDURES AND OTHER INFORMATION ON THE INSTALLATION OF THE IRRIGATION SYSTEM.
2. IRRIGATION PLAN IS DIAGRAMATIC. FINAL LOCATION OF PIPING WILL BE DETERMINED AT THE TIME OF INSTALLATION. MAINLINE AND LATERALS SHALL BE PLACED IN THE SAME TRENCH WHEN POSSIBLE. ALL Q.C. VALVES ARE TO BE LOCATED 12" FROM SIDEWALKS, CURBS, ASPHALT & CONCRETE SURFACES.
3. ALL EQUIPMENT REQUIRED BUT NOT SPECIFIED ON THE DRAWING, TO COMPLETE THE WORK, SHALL BE PROVIDED BY THE IRRIGATION CONTRACTOR.
4. INSTALL ALL EQUIPMENT IN ACCORDANCE WITH MANUFACTURER'S INSTRUCTIONS AND/OR SPECIFICATIONS.
5. TRENCH BACKFILL MATERIAL SHALL BE FREE OF ROCKS, GLASS, AND OTHER EXTRANEOUS MATERIALS. BACKFILL WILL BE COMPACTED TO 90% MAXIMUM DRY DENSITY.
6. IRRIGATION DESIGN IS BASED ON A MINIMUM 50 PSI STATIC WATER PRESSURE BEFORE BACKFLOW DEVICE. IF WATER PRESSURE IS LESS, CONTRACTOR IS TO CALL THE LANDSCAPE ARCHITECT BEFORE COMMENCING WITH THE WORK.
7. ALL VALVE CONTROL WIRE SHALL BE AWG 14 TYPE UF, 600 VOLT TEST, DIRECT BURIAL.
8. CONTROLLER POWER WIRE SHALL BE 120 VOLT WIRE AND PLACED IN 3/4" CONDUIT. POWER TO BE FROM ELECTRICAL PANEL. 120 VOLT SERVICE AND HOOK-UP TO THE CONTROLLER SHALL BE COMPLETED BY A LICENSED ELECTRICAL CONTRACTOR. THIS COST IS TO BE A PART OF THE LANDSCAPE CONTRACTOR'S BID.
9. CONNECT ALL DIRECT BURIAL WIRES USING 3M'S "DBY-DIRECT BURIAL SPLICE KIT"
10. CONTRACTOR SHALL PULL THREE (3) EXTRA WIRES AT EACH BANK OF REMOTE CONTROL VALVES OR MANIFOLD .
11. CONTRACTOR SHALL PROVIDE #10 COMMON WIRE TO ALL REMOTE CONTROL VALVES.
12. CONTRACTOR SHALL FAMILIARIZE HIMSELF WITH THE PLANS AND SITE CONDITIONS PRIOR TO BEGINNING WORK. SHOULD CONFLICTING INFORMATION BE FOUND ON THE PLANS, THE CONTRACTOR SHALL NOTIFY THE PROJECT LANDSCAPE ARCHITECT BEFORE PROCEEDING WITH THE WORK IN QUESTION.
13. DO NOT WILLFULLY INSTALL THE IRRIGATION SYSTEM AS SHOWN ON THE DRAWINGS WHEN IT IS OBVIOUS IN THE FIELD THAT OBSTRUCTIONS, GRADE DIFFERENCES OR DIFFERENCES IN THE AREA DIMENSIONS EXIST THAT MIGHT NOT HAVE BEEN CONSIDERED IN THE ENGINEERING. SUCH OBSTRUCTIONS OR DIFFERENCES SHOULD BE BROUGHT TO THE ATTENTION OF THE LANDSCAPE ARCHITECT. IN THE EVENT THIS NOTIFICATION IS NOT PERFORMED, THE CONTRACTOR SHALL ASSUME FULL RESPONSIBILITY FOR ANY REVISIONS NECESSARY AT NO EXPENSE TO THE OWNER.
14. CONTRACTOR SHALL COORDINATE POWER TO CONTROLLERS AND DEDICATE ONE (1) 20 AMP BREAKER FOR EACH CONTROLLER. THE AUTHORIZED REPRESENTATIVE SHALL REVIEW CONTROLLER LOCATIONS PRIOR TO INSTALLATION.
15. CONTRACTOR SHALL SLEEVE UNDER PAVING PER PLANS AND SPECIFICATIONS.
16. SPLICING OF 24 VOLT WIRES WILL NOT BE PERMITTED EXCEPT IN VALVE BOXES. LEAVE A 24" COIL OF EXCESS WIRE AT EACH SPLICE. LABEL ALL WIRES W/ WATERPROOF MARKERS AT ALL SPLICES AND VALVE MANIFOLDS.
17. CONTRACTOR SHALL BE RESPONSIBLE FOR THE INSTALLATION OF ALL MATERIAL APPEARING ON PLAN.
18. ALL EXISTING UTILITIES, WATER LINES AND FIRE HYDRANTS SHALL REMAIN CONNECTED AND IN FULL CONTINUOUS OPERATION DURING AND FOLLOWING ALL CONTRACT WORK EXCEPT AS SHOWN ON THIS SHEET.

LICENSED LANDSCAPE ARCHITECT
ANTHONY KEITH NO. 3823
10/31/04
DATE
STATE OF CALIFORNIA

REV	DATE	BY	DESCRIPTION

SCALE 1"=10'-0"

WARNING 0 1/2 1 — IF THIS BAR DOES NOT MEASURE 1" THEN DRAWING IS NOT TO SCALE

DESIGNED TK/CD
DRAWN C. DUFOUR
CHECKED T.KEITH

SUBMITTED BY
C31069 LICENSE NO. 2/16/2004 DATE
C23892 LICENSE NO. 2/16/2004 DATE

DIGALERT — DIAL TOLL FREE 1-800-642-2444 AT LEAST TWO DAYS BEFORE YOU DIG — UNDERGROUND SERVICE ALERT OF NORTHERN CALIFORNIA

LOS OSOS COMMUNITY SERVICES DISTRICT

MWH Walnut Creek, California

RRM DESIGN GROUP
Creating Environments People Enjoy
3765 South Higuera Street, Suite 102 • San Luis Obispo, California 93401
Phone 805/543-1794 • Fax 805/543-5274 • rrmdesigngroup.com
In Association with Mark Hess, PE, CWRE, CE 2001 of Hess, Kennedy Chartes Inc

LOS OSOS WASTEWATER PROJECT
LANDSCAPING
LUPINE PUMP STATION
IRRIGATION PLAN

SHEET B-L-200

N:\20021\10020008 Los Osos WWTP\Planning\product\Pump Stations\autocad\100%submittal\irrigation\10020008P_ps.dwg, B-L-200, Feb 06, 2004 4:26pm, CBDufour

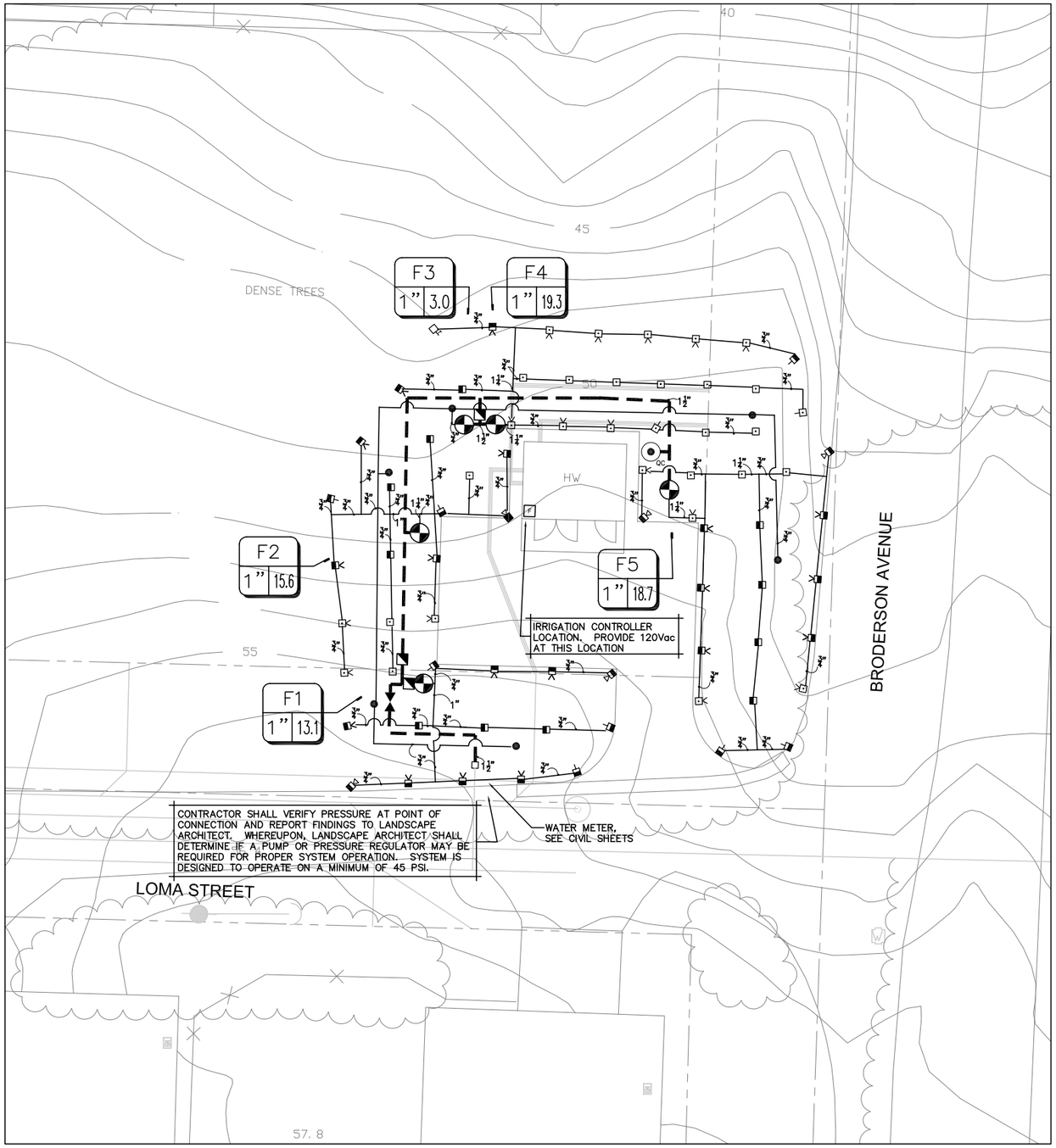

IRRIGATION LEGEND

SYMBOL	MANUF.	MODEL NO.	DESCRIPTION	NOZZLE	RAD.	G.P.M.	P.S.I.	REMARKS/ DETAIL
SPRAYS								
	RAINBIRD	1806-SAM	6" POP-UP SPRAY HEAD	15F	15'	3.7	30	SEE DETAIL H, SHEET BC-GL-200
TQ	RAINBIRD	1806-SAM	6" POP-UP SPRAY HEAD	15TQ	15'	2.78	30	SEE DETAIL H, SHEET BC-GL-200
TT	RAINBIRD	1806-SAM	6" POP-UP SPRAY HEAD	15TT	15'	2.48	30	SEE DETAIL H, SHEET BC-GL-200
H	RAINBIRD	1806-SAM	6" POP-UP SPRAY HEAD	15H	15'	1.85	30	SEE DETAIL H, SHEET BC-GL-200
T	RAINBIRD	1806-SAM	6" POP-UP SPRAY HEAD	15T	15'	1.23	30	SEE DETAIL H, SHEET BC-GL-200
Q	RAINBIRD	1806-SAM	6" POP-UP SPRAY HEAD	15Q	15'	.92	30	SEE DETAIL H, SHEET BC-GL-200
VAN	RAINBIRD	1806-SAM	6" POP-UP SPRAY HEAD	15 VAN	15'	VARIES	30	SEE DETAIL H, SHEET BC-GL-200
	RAINBIRD	1806-SAM	6" POP-UP SPRAY HEAD	12F	12'	2.6	30	SEE DETAIL H, SHEET BC-GL-200
TQ	RAINBIRD	1806-SAM	6" POP-UP SPRAY HEAD	12TQ	12'	1.95	30	SEE DETAIL H, SHEET BC-GL-200
TT	RAINBIRD	1806-SAM	6" POP-UP SPRAY HEAD	12TT	12'	1.74	30	SEE DETAIL H, SHEET BC-GL-200
H	RAINBIRD	1806-SAM	6" POP-UP SPRAY HEAD	12H	12'	1.3	30	SEE DETAIL H, SHEET BC-GL-200
T	RAINBIRD	1806-SAM	6" POP-UP SPRAY HEAD	12T	12'	.87	30	SEE DETAIL H, SHEET BC-GL-200
Q	RAINBIRD	1806-SAM	6" POP-UP SPRAY HEAD	12Q	12'	.65	30	SEE DETAIL H, SHEET BC-GL-200
VAN	RAINBIRD	1806-SAM	6" POP-UP SPRAY HEAD	12 VAN	12'	VARIES	30	SEE DETAIL H, SHEET BC-GL-200
	RAINBIRD	1806-SAM	6" POP-UP SPRAY HEAD	10 F	10'	1.58	30	SEE DETAIL H, SHEET BC-GL-200
H	RAINBIRD	1806-SAM	6" POP-UP SPRAY HEAD	10 H	10'	.79	30	SEE DETAIL H, SHEET BC-GL-200
T	RAINBIRD	1806-SAM	6" POP-UP SPRAY HEAD	10T	10'	.53	30	SEE DETAIL H, SHEET BC-GL-200
Q	RAINBIRD	1806-SAM	6" POP-UP SPRAY HEAD	10Q	10'	.39	30	SEE DETAIL H, SHEET BC-GL-200
VAN	RAINBIRD	1806-SAM	6" POP-UP SPRAY HEAD	10 VAN	10'	VARIES	30	SEE DETAIL H, SHEET BC-GL-200
	RAINBIRD	1806-SAM	6" POP-UP SPRAY HEAD	8F	8'	1.05	30	SEE DETAIL H, SHEET BC-GL-200
H	RAINBIRD	1806-SAM	6" POP-UP SPRAY HEAD	8H	8'	.52	30	SEE DETAIL H, SHEET BC-GL-200
T	RAINBIRD	1806-SAM	6" POP-UP SPRAY HEAD	8T	8'	.35	30	SEE DETAIL H, SHEET BC-GL-200
Q	RAINBIRD	1806-SAM	6" POP-UP SPRAY HEAD	8Q	8'	.26	30	SEE DETAIL H, SHEET BC-GL-200
VAN	RAINBIRD	1806-SAM	6" POP-UP SPRAY HEAD	8 VAN	8'	VARIES	30	SEE DETAIL H, SHEET BC-GL-200
	RAINBIRD	1806-SAM	6" POP-UP SPRAY HEAD	15-SST	4'x30'	1.21	30	SEE DETAIL H, SHEET BC-GL-200
	RAINBIRD	1806-SAM	6" POP-UP SPRAY HEAD	15-EST	4'x15'	0.61	30	SEE DETAIL H, SHEET BC-GL-200
BUBBLERS								
	RAINBIRD	RWS-B-G	TREE ROOT BUBBLER	1402	N/A	0.5	30	SEE DETAIL J, SHEET BC-GL-200
VALVES								
	RAINBIRD	PEB SERIES (INCLUDE PRS DIAL)	PRESSURE REGULATED R.C. VALVE					SEE DETAIL D & E, SHEET BC-GL-200
	RAINBIRD	44 LRC	1" QUICK COUPLING VALVE					SEE DETAIL B, SHEET BC-GL-200
	KBI	BTU SERIES	TRUE UNION BALL VALVE					SEE DETAIL C, SHEET BC-GL-200
BACKFLOW DEVICE								
	FEBCO	825YA	1 1/4" BACKFLOW PREVENTOR					SEE DETAIL A, SHEET BC-GL-200
MAIN LINE/ LATERALS & SLEEVES								
	SEE SPECS	SEE SPECS	SCH. 40 PVC MAIN LINE.					SEE PLAN FOR SIZING. SEE DETAIL G, SHEET BC-GL-200
	SEE SPECS	SEE SPECS	SCH 40 PVC SLEEVE					TWO TIMES THE SIZE THE PIPE DIAMETER. SEE DETAIL G, SHEET BC-GL-200
CONTROLLERS								
F	RAINBIRD	ESP-12-RK-LS	12 STA. WALL MOUNT SATELLITE CONTROLLER					SEE DETAIL K, SHEET BC-GL-200

IRRIGATION NOTES

1. SEE SPECIAL & STANDARD SPECIFICATIONS FOR INSTRUCTIONS, APPLICATION, PROCEDURES AND OTHER INFORMATION ON THE INSTALLATION OF THE IRRIGATION SYSTEM.
2. IRRIGATION PLAN IS DIAGRAMATIC. FINAL LOCATION OF PIPING WILL BE DETERMINED AT THE TIME OF INSTALLATION. MAINLINE AND LATERALS SHALL BE PLACED IN THE SAME TRENCH WHEN POSSIBLE. ALL Q.C. VALVES ARE TO BE LOCATED 12" FROM SIDEWALKS, CURBS, ASPHALT & CONCRETE SURFACES.
3. ALL EQUIPMENT REQUIRED BUT NOT SPECIFIED ON THE DRAWING, TO COMPLETE THE WORK, SHALL BE PROVIDED BY THE IRRIGATION CONTRACTOR.
4. INSTALL ALL EQUIPMENT IN ACCORDANCE WITH MANUFACTURER'S INSTRUCTIONS AND/OR SPECIFICATIONS.
5. TRENCH BACKFILL MATERIAL SHALL BE FREE OF ROCKS, GLASS, AND OTHER EXTRANEOUS MATERIALS. BACKFILL WILL BE COMPACTED TO 90% MAXIMUM DRY DENSITY.
6. IRRIGATION DESIGN IS BASED ON A MINIMUM 45 PSI STATIC WATER PRESSURE BEFORE BACKFLOW DEVICE. IF WATER PRESSURE IS LESS, CONTRACTOR IS TO CALL THE LANDSCAPE ARCHITECT BEFORE COMMENCING WITH THE WORK.
7. ALL VALVE CONTROL WIRE SHALL BE AWG 14 TYPE UF, 600 VOLT TEST, DIRECT BURIAL.
8. CONTROLLER POWER WIRE SHALL BE 120 VOLT WIRE AND PLACED IN 3/4" CONDUIT. POWER TO BE FROM ELECTRICAL PANEL. 120 VOLT SERVICE AND HOOK-UP TO THE CONTROLLER SHALL BE COMPLETED BY A LICENSED ELECTRICAL CONTRACTOR. THIS COST IS TO BE A PART OF THE LANDSCAPE CONTRACTOR'S BID.
9. CONNECT ALL DIRECT BURIAL WIRES USING 3M'S "DBY-DIRECT BURIAL SPLICE KIT"
10. CONTRACTOR SHALL PULL THREE (3) EXTRA WIRES AT EACH BANK OF REMOTE CONTROL VALVES OR MANIFOLD .
11. CONTRACTOR SHALL PROVIDE #10 COMMON WIRE TO ALL REMOTE CONTROL VALVES.
12. CONTRACTOR SHALL FAMILIARIZE HIMSELF WITH THE PLANS AND SITE CONDITIONS PRIOR TO BEGINNING WORK. SHOULD CONFLICTING INFORMATION BE FOUND ON THE PLANS, THE CONTRACTOR SHALL NOTIFY THE PROJECT LANDSCAPE ARCHITECT BEFORE PROCEEDING WITH THE WORK IN QUESTION.
13. DO NOT WILLFULLY INSTALL THE IRRIGATION SYSTEM AS SHOWN ON THE DRAWINGS WHEN IT IS OBVIOUS IN THE FIELD THAT OBSTRUCTIONS, GRADE DIFFERENCES OR DIFFERENCES IN THE AREA DIMENSIONS EXIST THAT MIGHT NOT HAVE BEEN CONSIDERED IN THE ENGINEERING. SUCH OBSTRUCTIONS OR DIFFERENCES SHOULD BE BROUGHT TO THE ATTENTION OF THE LANDSCAPE ARCHITECT. IN THE EVENT THIS NOTIFICATION IS NOT PERFORMED, THE CONTRACTOR SHALL ASSUME FULL RESPONSIBILITY FOR ANY REVISIONS NECESSARY AT NO EXPENSE TO THE OWNER.
14. CONTRACTOR SHALL COORDINATE POWER TO CONTROLLERS AND DEDICATE ONE (1) 20 AMP BREAKER FOR EACH CONTROLLER. THE AUTHORIZED REPRESENTATIVE SHALL REVIEW CONTROLLER LOCATIONS PRIOR TO INSTALLATION.
15. CONTRACTOR SHALL SLEEVE UNDER PAVING PER PLANS AND SPECIFICATIONS.
16. SPLICING OF 24 VOLT WIRES WILL NOT BE PERMITTED EXCEPT IN VALVE BOXES. LEAVE A 24" COIL OF EXCESS WIRE AT EACH SPLICE. LABEL ALL WIRES W/ WATERPROOF MARKERS AT ALL SPLICES AND VALVE MANIFOLDS.
17. CONTRACTOR SHALL BE RESPONSIBLE FOR THE INSTALLATION OF ALL MATERIAL APPEARING ON PLAN.
18. ALL EXISTING UTILITIES, WATER LINES AND FIRE HYDRANTS SHALL REMAIN CONNECTED AND IN FULL CONTINUOUS OPERATION DURING AND FOLLOWING ALL CONTRACT WORK EXCEPT AS SHOWN ON THIS SHEET.

LICENSED LANDSCAPE ARCHITECT
ANTHONY KEITH NO. 2613
10/31/04
Date
STATE OF CALIFORNIA

LOMA HARVEST WELL

north

SCALE: 1" = 10'

REV	DATE	BY	DESCRIPTION

SCALE: 1"=10'-0"

WARNING: 0 1/2 1 — IF THIS BAR DOES NOT MEASURE 1" THEN DRAWING IS NOT TO SCALE

DESIGNED TK/CD
DRAWN C. DUFOUR
CHECKED T.KEITH

SUBMITTED BY
C31069 LICENSE NO. 2/16/2004 DATE
C23892 LICENSE NO. 2/16/2004 DATE

DIGALERT — DIAL TOLL FREE 1-800-642-2444 AT LEAST TWO DAYS BEFORE YOU DIG — UNDERGROUND SERVICE ALERT OF NORTHERN CALIFORNIA

LOS OSOS COMMUNITY SERVICES DISTRICT

MWH Walnut Creek, California

RRM DESIGN GROUP — Creating Environments People Enjoy

LOS OSOS WASTEWATER PROJECT
LANDSCAPING
LOMA HARVEST WELL
IRRIGATION PLAN

SHEET B-L-201

N:\2002\1002008 Los Osos WWTF\Planning\product\Pump Stations\autocad\1003Submittal\Irrigation\1002008P_ps.dwg, B-L-201, Feb 06, 2004 4:25pm, CBDufour

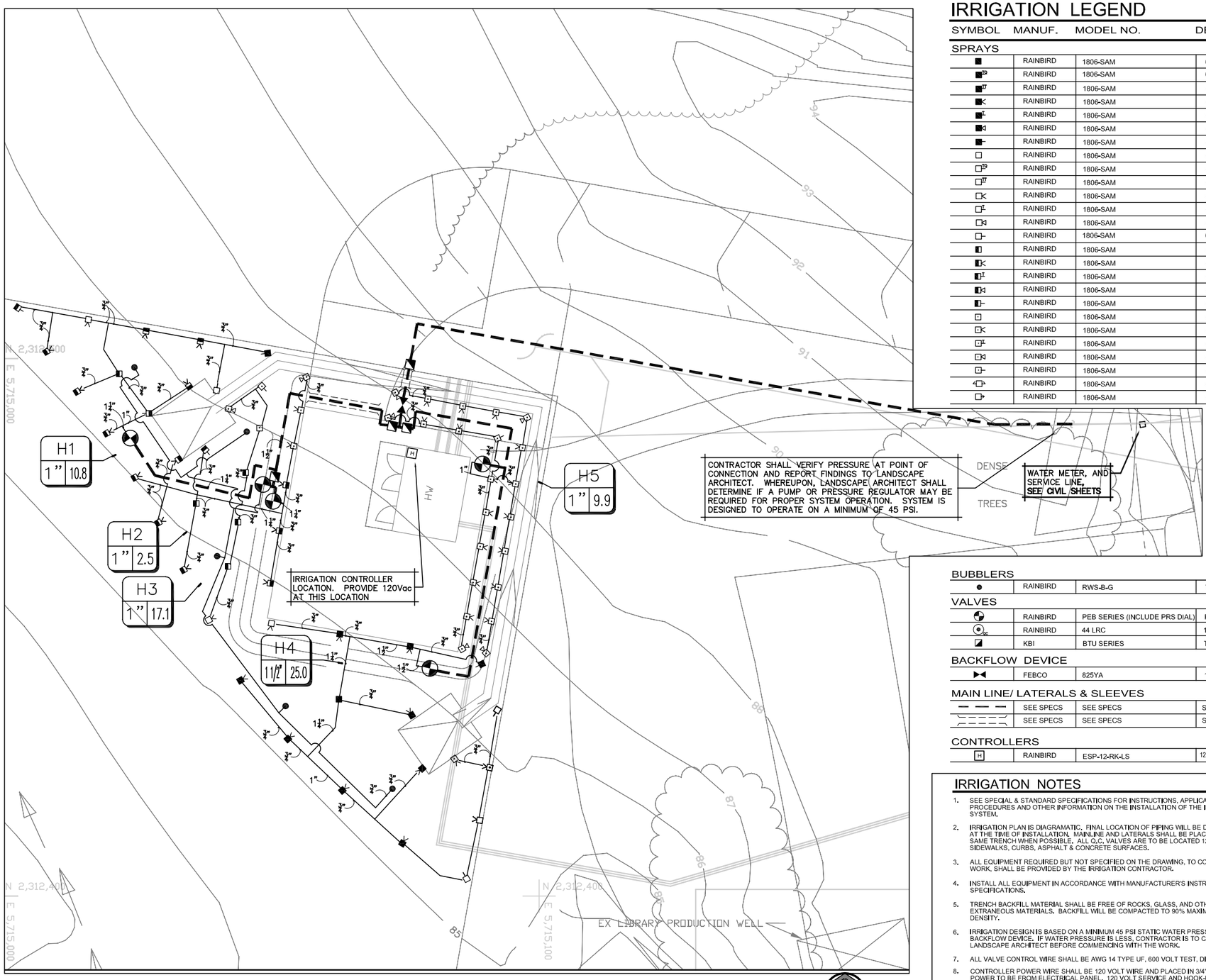

IRRIGATION LEGEND

SYMBOL	MANUF.	MODEL NO.	DESCRIPTION	NOZZLE	RAD.	G.P.M.	P.S.I.	REMARKS/ DETAIL
SPRAYS								
	RAINBIRD	1806-SAM	6" POP-UP SPRAY HEAD	15F	15'	3.7	30	SEE DETAIL H, SHEET BC-GL-200
	RAINBIRD	1806-SAM	6" POP-UP SPRAY HEAD	15TQ	15'	2.78	30	SEE DETAIL H, SHEET BC-GL-200
	RAINBIRD	1806-SAM	6" POP-UP SPRAY HEAD	15TT	15'	2.48	30	SEE DETAIL H, SHEET BC-GL-200
	RAINBIRD	1806-SAM	6" POP-UP SPRAY HEAD	15H	15'	1.85	30	SEE DETAIL H, SHEET BC-GL-200
	RAINBIRD	1806-SAM	6" POP-UP SPRAY HEAD	15T	15'	1.23	30	SEE DETAIL H, SHEET BC-GL-200
	RAINBIRD	1806-SAM	6" POP-UP SPRAY HEAD	15Q	15'	.92	30	SEE DETAIL H, SHEET BC-GL-200
	RAINBIRD	1806-SAM	6" POP-UP SPRAY HEAD	15 VAN	15'	VARIES	30	SEE DETAIL H, SHEET BC-GL-200
	RAINBIRD	1806-SAM	6" POP-UP SPRAY HEAD	12F	12'	2.6	30	SEE DETAIL H, SHEET BC-GL-200
	RAINBIRD	1806-SAM	6" POP-UP SPRAY HEAD	12TQ	12'	1.95	30	SEE DETAIL H, SHEET BC-GL-200
	RAINBIRD	1806-SAM	6" POP-UP SPRAY HEAD	12TT	12'	1.74	30	SEE DETAIL H, SHEET BC-GL-200
	RAINBIRD	1806-SAM	6" POP-UP SPRAY HEAD	12H	12'	1.3	30	SEE DETAIL H, SHEET BC-GL-200
	RAINBIRD	1806-SAM	6" POP-UP SPRAY HEAD	12T	12'	.87	30	SEE DETAIL H, SHEET BC-GL-200
	RAINBIRD	1806-SAM	6" POP-UP SPRAY HEAD	12Q	12'	.65	30	SEE DETAIL H, SHEET BC-GL-200
	RAINBIRD	1806-SAM	6" POP-UP SPRAY HEAD	12 VAN	12'	VARIES	30	SEE DETAIL H, SHEET BC-GL-200
	RAINBIRD	1806-SAM	6" POP-UP SPRAY HEAD	10 F	10'	1.58	30	SEE DETAIL H, SHEET BC-GL-200
	RAINBIRD	1806-SAM	6" POP-UP SPRAY HEAD	10 H	10'	.79	30	SEE DETAIL H, SHEET BC-GL-200
	RAINBIRD	1806-SAM	6" POP-UP SPRAY HEAD	10T	10'	.53	30	SEE DETAIL H, SHEET BC-GL-200
	RAINBIRD	1806-SAM	6" POP-UP SPRAY HEAD	10Q	10'	.39	30	SEE DETAIL H, SHEET BC-GL-200
	RAINBIRD	1806-SAM	6" POP-UP SPRAY HEAD	10 VAN	10'	VARIES	30	SEE DETAIL H, SHEET BC-GL-200
	RAINBIRD	1806-SAM	6" POP-UP SPRAY HEAD	8F	8'	1.05	30	SEE DETAIL H, SHEET BC-GL-200
	RAINBIRD	1806-SAM	6" POP-UP SPRAY HEAD	8H	8'	.52	30	SEE DETAIL H, SHEET BC-GL-200
	RAINBIRD	1806-SAM	6" POP-UP SPRAY HEAD	8T	8'	.35	30	SEE DETAIL H, SHEET BC-GL-200
	RAINBIRD	1806-SAM	6" POP-UP SPRAY HEAD	8Q	8'	.26	30	SEE DETAIL H, SHEET BC-GL-200
	RAINBIRD	1806-SAM	6" POP-UP SPRAY HEAD	8 VAN	8'	VARIES	30	SEE DETAIL H, SHEET BC-GL-200
	RAINBIRD	1806-SAM	6" POP-UP SPRAY HEAD	15-SST	4'x30'	1.21	30	SEE DETAIL H, SHEET BC-GL-200
	RAINBIRD	1806-SAM	6" POP-UP SPRAY HEAD	15-EST	4'x15'	0.61	30	SEE DETAIL H, SHEET BC-GL-200
BUBBLERS								
	RAINBIRD	RWS-B-G	TREE ROOT BUBBLER	1402	N/A	0.5	30	SEE DETAIL J, SHEET BC-GL-200
VALVES								
	RAINBIRD	PEB SERIES (INCLUDE PRS DIAL)	PRESSURE REGULATED R.C. VALVE					SEE DETAIL D & E, SHEET BC-GL-200
	RAINBIRD	44 LRC	1" QUICK COUPLING VALVE					SEE DETAIL B, SHEET BC-GL-200
	KBI	BTU SERIES	TRUE UNION BALL VALVE					SEE DETAIL C, SHEET BC-GL-200
BACKFLOW DEVICE								
	FEBCO	825YA	1 1/4" BACKFLOW PREVENTOR					SEE DETAIL A, SHEET BC-GL-200
MAIN LINE/ LATERALS & SLEEVES								
	SEE SPECS	SEE SPECS	SCH. 40 PVC MAIN LINE.					SEE PLAN FOR SIZING, SEE DETAIL G, SHEET BC-GL-200
	SEE SPECS	SEE SPECS	SCH 40 PVC SLEEVE					TWO TIMES THE SIZE THE PIPE DIAMETER, SEE DETAIL G, SHEET BC-GL-200
CONTROLLERS								
H	RAINBIRD	ESP-12-RK-LS	12 STA. WALL MOUNT SATELLITE CONTROLLER					SEE DETAIL K, SHEET BC-GL-200

IRRIGATION NOTES

1. SEE SPECIAL & STANDARD SPECIFICATIONS FOR INSTRUCTIONS, APPLICATION, PROCEDURES AND OTHER INFORMATION ON THE INSTALLATION OF THE IRRIGATION SYSTEM.
2. IRRIGATION PLAN IS DIAGRAMATIC. FINAL LOCATION OF PIPING WILL BE DETERMINED AT THE TIME OF INSTALLATION. MAINLINE AND LATERALS SHALL BE PLACED IN THE SAME TRENCH WHEN POSSIBLE. ALL Q.C. VALVES ARE TO BE LOCATED 12" FROM SIDEWALKS, CURBS, ASPHALT & CONCRETE SURFACES.
3. ALL EQUIPMENT REQUIRED BUT NOT SPECIFIED ON THE DRAWING, TO COMPLETE THE WORK, SHALL BE PROVIDED BY THE IRRIGATION CONTRACTOR.
4. INSTALL ALL EQUIPMENT IN ACCORDANCE WITH MANUFACTURER'S INSTRUCTIONS AND/OR SPECIFICATIONS.
5. TRENCH BACKFILL MATERIAL SHALL BE FREE OF ROCKS, GLASS, AND OTHER EXTRANEOUS MATERIALS. BACKFILL WILL BE COMPACTED TO 90% MAXIMUM DRY DENSITY.
6. IRRIGATION DESIGN IS BASED ON A MINIMUM 45 PSI STATIC WATER PRESSURE BEFORE BACKFLOW DEVICE. IF WATER PRESSURE IS LESS, CONTRACTOR IS TO CALL THE LANDSCAPE ARCHITECT BEFORE COMMENCING WITH THE WORK.
7. ALL VALVE CONTROL WIRE SHALL BE AWG 14 TYPE UF, 600 VOLT TEST, DIRECT BURIAL.
8. CONTROLLER POWER WIRE SHALL BE 120 VOLT WIRE AND PLACED IN 3/4" CONDUIT. POWER TO BE FROM ELECTRICAL PANEL. 120 VOLT SERVICE AND HOOK-UP TO THE CONTROLLER SHALL BE COMPLETED BY A LICENSED ELECTRICAL CONTRACTOR. THIS COST IS TO BE A PART OF THE LANDSCAPE CONTRACTOR'S BID.
9. CONNECT ALL DIRECT BURIAL WIRES USING 3M'S "DBY-DIRECT BURIAL SPLICE KIT"
10. CONTRACTOR SHALL PULL THREE (3) EXTRA WIRES AT EACH BANK OF REMOTE CONTROL VALVES OR MANIFOLD .
11. CONTRACTOR SHALL PROVIDE #10 COMMON WIRE TO ALL REMOTE CONTROL VALVES.
12. CONTRACTOR SHALL FAMILIARIZE HIMSELF WITH THE PLANS AND SITE CONDITIONS PRIOR TO BEGINNING WORK. SHOULD CONFLICTING INFORMATION BE FOUND ON THE PLANS, THE CONTRACTOR SHALL NOTIFY THE PROJECT LANDSCAPE ARCHITECT BEFORE PROCEEDING WITH THE WORK IN QUESTION.
13. DO NOT WILLFULLY INSTALL THE IRRIGATION SYSTEM AS SHOWN ON THE DRAWINGS WHEN IT IS OBVIOUS IN THE FIELD THAT OBSTRUCTIONS, GRADE DIFFERENCES OR DIFFERENCES IN THE AREA DIMENSIONS EXIST THAT MIGHT NOT HAVE BEEN CONSIDERED IN THE ENGINEERING. SUCH OBSTRUCTIONS OR DIFFERENCES SHOULD BE BROUGHT TO THE ATTENTION OF THE LANDSCAPE ARCHITECT. IN THE EVENT THIS NOTIFICATION IS NOT PERFORMED, THE CONTRACTOR SHALL ASSUME FULL RESPONSIBILITY FOR ANY REVISIONS NECESSARY AT NO EXPENSE TO THE OWNER.
14. CONTRACTOR SHALL COORDINATE POWER TO CONTROLLERS AND DEDICATE ONE (1) 20 AMP BREAKER FOR EACH CONTROLLER. THE AUTHORIZED REPRESENTATIVE SHALL REVIEW CONTROLLER LOCATIONS PRIOR TO INSTALLATION.
15. CONTRACTOR SHALL SLEEVE UNDER PAVING PER PLANS AND SPECIFICATIONS.
16. SPLICING OF 24 VOLT WIRES WILL NOT BE PERMITTED EXCEPT IN VALVE BOXES. LEAVE A 24" COIL OF EXCESS WIRE AT EACH SPLICE. LABEL ALL WIRES W/ WATERPROOF MARKERS AT ALL SPLICES AND VALVE MANIFOLDS.
17. CONTRACTOR SHALL BE RESPONSIBLE FOR THE INSTALLATION OF ALL MATERIAL APPEARING ON PLAN.
18. ALL EXISTING UTILITIES, WATER LINES AND FIRE HYDRANTS SHALL REMAIN CONNECTED AND IN FULL CONTINUOUS OPERATION DURING AND FOLLOWING ALL CONTRACT WORK EXCEPT AS SHOWN ON THIS SHEET.

LICENSED LANDSCAPE ARCHITECT
ANTHONY KEITH NO. 3823
10/31/04
STATE OF CALIFORNIA

PALISADES HARVEST WELL

SCALE: 1" = 10'

REV	DATE	BY	DESCRIPTION

SCALE 1"=10'-0"

WARNING 0 1/2 1 IF THIS BAR DOES NOT MEASURE 1" THEN DRAWING IS NOT TO SCALE

DESIGNED TK/CD
DRAWN C. DUFOUR
CHECKED T.KEITH

SUBMITTED BY
C31069 LICENSE NO. 2/16/2004 DATE
C23892 LICENSE NO. 2/16/2004 DATE

DIGALERT DIAL TOLL FREE 1-800-642-2444 AT LEAST TWO DAYS BEFORE YOU DIG UNDERGROUND SERVICE ALERT OF NORTHERN CALIFORNIA

LOS OSOS COMMUNITY SERVICES DISTRICT

MWH Walnut Creek, California

RRM DESIGN GROUP Landscape Architecture Planning Graphics

LOS OSOS WASTEWATER PROJECT LANDSCAPING
PALISADES HARVEST WELL IRRIGATION PLAN

SHEET B-L-202

N:\2002\1002008 Los Osos WWT\Planning\product\Pump Stations\autocad\100%submittal\irrigation\100200BP_ps.dwg, B-L-202, Feb 06, 2004 4:25pm, CBDufour

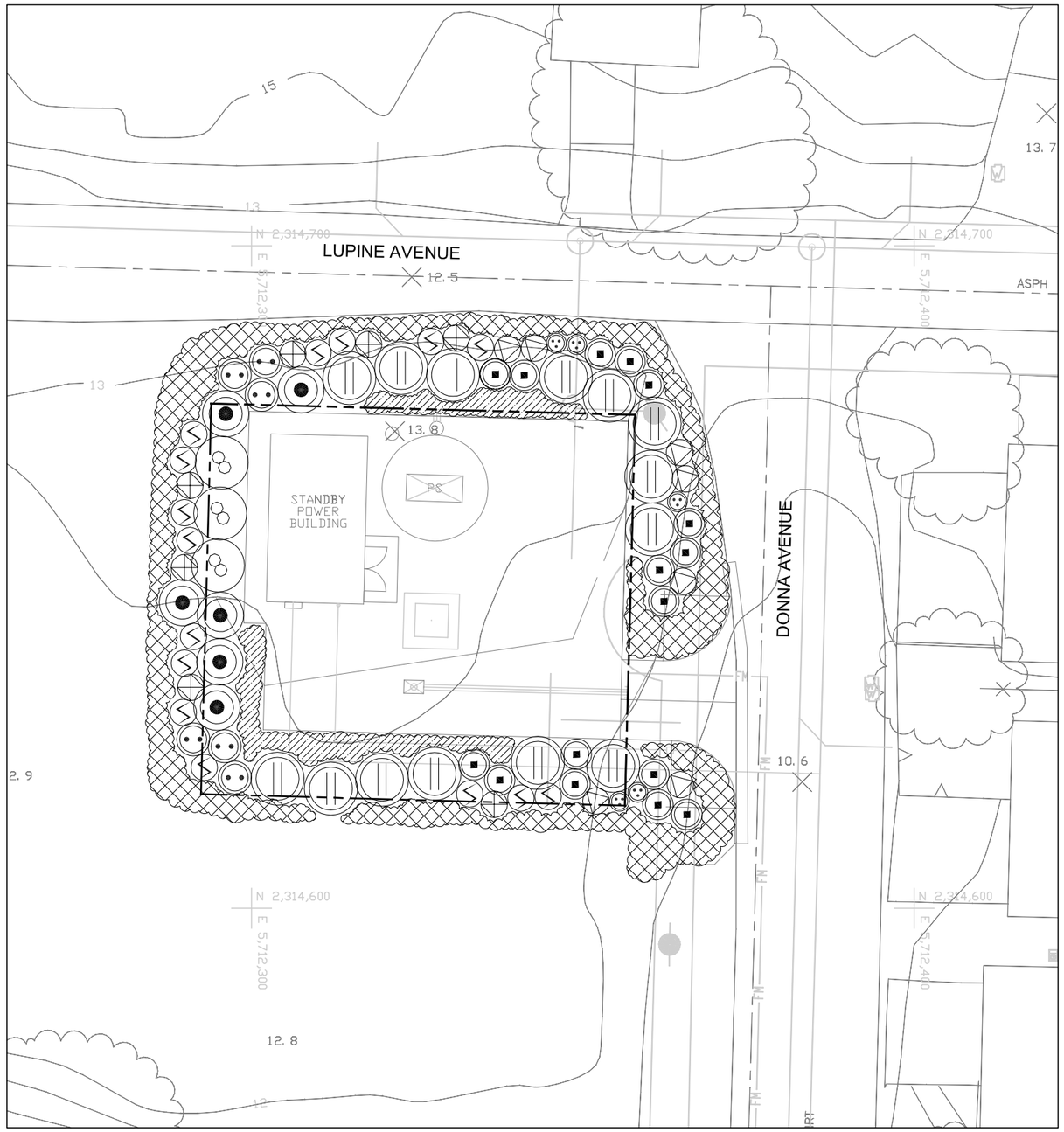

PLANT LEGEND

SYMBOL	BOTANICAL NAME	COMMON NAME	SIZE	QUANTITY	REMARKS
SHRUBS					
	CEANOTHUS CUNEATUS	BUCKBRUSH	5 GAL.	14	SEE DETAIL B, SHEET BC-GL-202
	COREOPSIS GIGANTEA	GIANT COREOPSIS	1 GAL.	7	SEE DETAIL B, SHEET BC-GL-202
	LUPINUS CHAMISSONIS	COASTAL SILVER LUPINE	1 GAL.	15	SEE DETAIL B, SHEET BC-GL-202
	MIMULUS AURANTIACUS	STICKY MONKEY FLOWER	1 GAL.	7	SEE DETAIL B, SHEET BC-GL-202
	PENSTEMON SPECTIBILIS	SHOWY PENSTEMON	1 GAL.	5	SEE DETAIL B, SHEET BC-GL-202
	RHAMNUS CALIFORNICA	CALIFORNIA COFFEEBERRY	15 GAL.	3	SEE DETAIL B, SHEET BC-GL-202
	RHAMNUS CROCEA	REDBERRY	15 GAL.	6	SEE DETAIL B, SHEET BC-GL-202
	RIBES SPECIOSUM	FUSCHIA-FLOWERED GOOSEBERRY	5 GAL.	6	SEE DETAIL B, SHEET BC-GL-202
	SALVIA MELLIFERA	BLACK SAGE	1 GAL.	16	SEE DETAIL B, SHEET BC-GL-202
GROUND COVER					
	BACCHARIS PILULARIS 'PIGEON POINT'	DWARF COYOTE BUSH	1 GAL.	9	6' O.C., SEE DETAIL C, SHEET BC-GL-202
	ERIGONIUM PARVIFOLIUM	CLIFF BUCKWHEAT	1 GAL.	311	24" O.C., SEE DETAIL C, SHEET BC-GL-202

PLANTING NOTES

1. PLANT LIST IS FOR CONVENIENCE OF CONTRACTOR ONLY. IN CASE OF DISCREPANCIES BETWEEN THE PLANS AND THE LIST, PLANS SHALL PREVAIL.
2. PLANT LOCATIONS SHOWN ON THE PLANS ARE DIAGRAMATIC. CONTRACTOR SHALL LOCATE ALL PLANT MATERIAL UNDER THE DIRECTION OF THE CITY ENGINEER OR AUTHORIZED REPRESENTATIVE PRIOR TO PLANTING HOLE EXCAVATION.
3. THE CITY ENGINEER OR AUTHORIZED REPRESENTATIVE RESERVES THE RIGHT TO MAKE SUBSTITUTIONS, ADDITIONS, AND DELETIONS TO THE PLANTING LAYOUT AS WORK PROGRESSES.
4. ALL GROUNDCOVER SHALL BE TRIANGULARLY SPACED UNLESS OTHERWISE NOTED.
5. CONTRACTOR SHALL INSTALL A 3" LAYER OF 'STRINGY CEDAR BARK' MULCH IN ALL PLANTING AREAS A MIN. 12" BEYOND EXTENT OF ALL PLANTS

LUPINE PUMP STATION

north

SCALE: 1" = 10'

LICENSED LANDSCAPE ARCHITECT
ANTHONY KEITH NO. 3872
10/31/04
DATE
STATE OF CALIFORNIA

REV	DATE	BY	DESCRIPTION

SCALE: 1"=10'-0"

WARNING: 0 1/2 1 — IF THIS BAR DOES NOT MEASURE 1" THEN DRAWING IS NOT TO SCALE

DESIGNED TK/BMO
DRAWN B.OSBORN
CHECKED T.KEITH

SUBMITTED BY
C31069 LICENSE NO. 2/16/2004 DATE
C23892 LICENSE NO. 2/16/2004 DATE

DIGALERT — DIAL TOLL FREE 1-800-642-2444 AT LEAST TWO DAYS BEFORE YOU DIG — UNDERGROUND SERVICE ALERT OF NORTHERN CALIFORNIA

LOS OSOS COMMUNITY SERVICES DISTRICT

MWH Walnut Creek, California

RRM DESIGN GROUP

LOS OSOS WASTEWATER PROJECT
LANDSCAPING
LUPINE PUMP STATION
PLANTING PLAN

SHEET B-L-203

N:\2002\10020308 Los Osos WWT\Planning\product\Pump Stations\autocad\100%submittal\planting\10020308PP_ps.dwg, B-L-203, Feb 06, 2004 5:12pm, BMOsborn

PLANT LEGEND

SYMBOL	BOTANICAL NAME	COMMON NAME	SIZE	QUANTITY	REMARKS
TREES					
	QUERCUS AGRIFOLIA	QUERCUS AGRIFOLIA	24" BOX	6	SEE DETAIL A, SHEET BC-GL-202
SHRUBS					
	ARCTOSTAPHYLOS MORROENSIS	PARK VIEW MANZANITA	5 GAL.	15	SEE DETAIL B, SHEET BC-GL-202
	ARTEMESIA CALIFORNICA	CALIFORNIA SAGEBRUSH	1 GAL.	9	SEE DETAIL B, SHEET BC-GL-202
	CEANOTHUS CUNEATUS	BUCKBRUSH	5 GAL.	14	SEE DETAIL B, SHEET BC-GL-202
	ERICAMERIA ERICOIDES	MOCK HEATHER	1 GAL.	9	SEE DETAIL B, SHEET BC-GL-202
	HETEROMELES ARBUTIFOLIA	TOYON	15 GAL.	27	SEE DETAIL B, SHEET BC-GL-202
	PRUNUS ILICIFOLIA	HOLLY LEAFED CHERRY	15 GAL.	1	SEE DETAIL B, SHEET BC-GL-202
	RHAMNUS CALIFORNICA	CALIFORNIA COFFEEBERRY	15 GAL.	3	SEE DETAIL B, SHEET BC-GL-202
	RHAMNUS CROCEA	REDBERRY	15 GAL.	12	SEE DETAIL B, SHEET BC-GL-202
GROUND COVER					
	BACCHARIS PILULARIS 'PIGEON POINT'	DWARF COYOTE BUSH	1 GAL.	10	6' O.C., SEE DETAIL C, SHEET BC-GL-202

PLANTING NOTES

1. PLANT LIST IS FOR CONVENIENCE OF CONTRACTOR ONLY. IN CASE OF DISCREPANCIES BETWEEN THE PLANS AND THE LIST, PLANS SHALL PREVAIL.
2. PLANT LOCATIONS SHOWN ON THE PLANS ARE DIAGRAMATIC. CONTRACTOR SHALL LOCATE ALL PLANT MATERIAL UNDER THE DIRECTION OF THE CITY ENGINEER OR AUTHORIZED REPRESENTATIVE PRIOR TO PLANTING HOLE EXCAVATION.
3. THE CITY ENGINEER OR AUTHORIZED REPRESENTATIVE RESERVES THE RIGHT TO MAKE SUBSTITUTIONS, ADDITIONS, AND DELETIONS TO THE PLANTING LAYOUT AS WORK PROGRESSES.
4. ALL GROUNDCOVER SHALL BE TRIANGULARLY SPACED UNLESS OTHERWISE NOTED.
5. CONTRACTOR SHALL INSTALL A 3" LAYER OF 'STRINGY CEDAR BARK' MULCH IN ALL PLANTING AREAS A MIN. 12" BEYOND EXTENT OF ALL PLANTS

LICENSED LANDSCAPE ARCHITECT
ANTHONY KEITH NO. 3823
10/31/04
STATE OF CALIFORNIA

LOMA HARVEST WELL

north

SCALE: 1" = 10'

REV	DATE	BY	DESCRIPTION

SCALE 1"=10'-0"

WARNING 0 1/2 1 IF THIS BAR DOES NOT MEASURE 1" THEN DRAWING IS NOT TO SCALE

DESIGNED TK/BMO
DRAWN B.OSBORN
CHECKED T.KEITH

SUBMITTED BY
C31069 LICENSE NO. 2/16/2004 DATE
C23892 LICENSE NO. 2/16/2004 DATE

DIGALERT DIAL TOLL FREE 1-800-642-2444 AT LEAST TWO DAYS BEFORE YOU DIG UNDERGROUND SERVICE ALERT OF NORTHERN CALIFORNIA

LOS OSOS COMMUNITY SERVICES DISTRICT

MWH Walnut Creek, California

RRM DESIGN GROUP Creating Environments People Enjoy

LOS OSOS WASTEWATER PROJECT LANDSCAPING
LOMA HARVEST WELL PLANTING PLAN

SHEET B-L-204

N:\2002\1002008 Los Osos WWTF\Planning\product\Pump Stations\autocad\100208submittal\planting\100200089P_ps.dwg, B-L-204, Feb 06, 2004 5:09pm, BMOsborn

PLANTING NOTES

1. PLANT LIST IS FOR CONVENIENCE OF CONTRACTOR ONLY. IN CASE OF DISCREPANCIES BETWEEN THE PLANS AND THE LIST, PLANS SHALL PREVAIL.
2. PLANT LOCATIONS SHOWN ON THE PLANS ARE DIAGRAMATIC. CONTRACTOR SHALL LOCATE ALL PLANT MATERIAL UNDER THE DIRECTION OF THE CITY ENGINEER OR AUTHORIZED REPRESENTATIVE PRIOR TO PLANTING HOLE EXCAVATION.
3. THE CITY ENGINEER OR AUTHORIZED REPRESENTATIVE RESERVES THE RIGHT TO MAKE SUBSTITUTIONS, ADDITIONS, AND DELETIONS TO THE PLANTING LAYOUT AS WORK PROGRESSES.
4. ALL GROUNDCOVER SHALL BE TRIANGULARLY SPACED UNLESS OTHERWISE NOTED.
5. CONTRACTOR SHALL INSTALL A 3" LAYER OF 'STRINGY CEDAR BARK' MULCH IN ALL PLANTING AREAS A MIN. 12" BEYOND EXTENT OF ALL PLANTS

north

SCALE: 1" = 10'

PALISADES HARVEST WELL

PLANT LEGEND

SYMBOL	BOTANICAL NAME	COMMON NAME	SIZE	QUANTITY	REMARKS
TREES					
	QUERCUS AGRIFOLIA	QUERCUS AGRIFOLIA	24" BOX	5	SEE DETAIL A, SHEET BC-GL-202

SYMBOL	BOTANICAL NAME	COMMON NAME	SIZE	QUANTITY	REMARKS
SHRUBS					
	ARCTOSTAPHYLOS MORROENSIS	PARK VIEW MANZANITA	5 GAL.	26	SEE DETAIL B, SHEET BC-GL-202
	ARTEMESIA CALIFORNICA	CALIFORNIA SAGEBRUSH	1 GAL.	26	SEE DETAIL B, SHEET BC-GL-202
	CEANOTHUS CUNEATUS	BUCKBRUSH	5 GAL.	15	SEE DETAIL B, SHEET BC-GL-202
	LUPINUS CHAMISSONIS	COASTAL SILVER LUPINE	1 GAL.	12	SEE DETAIL B, SHEET BC-GL-202
	SALVIA MELLIFERA	BLACK SAGE	1 GAL.	11	SEE DETAIL B, SHEET BC-GL-202
GROUND COVER					
	BACCHARIS PILULARIS 'PIGEON POINT'	DWARF COYOTE BUSH	1 GAL.	28	6' O.C., SEE DETAIL C, SHEET BC-GL-202

LICENSED LANDSCAPE ARCHITECT
ANTHONY KEITH NO. 3673
10/31/04
STATE OF CALIFORNIA

REV	DATE	BY	DESCRIPTION

SCALE 1"=10'-0"

WARNING 0 1/2 1 IF THIS BAR DOES NOT MEASURE 1" THEN DRAWING IS NOT TO SCALE

DESIGNED TK/BMO
DRAWN B.OSBORN
CHECKED T.KEITH

SUBMITTED BY
C31069 LICENSE NO. 2/16/2004 DATE
Steven J. Hyland C23892 LICENSE NO. 2/16/2004 DATE

DIGALERT DIAL TOLL FREE 1-800-642-2444 AT LEAST TWO DAYS BEFORE YOU DIG UNDERGROUND SERVICE ALERT OF NORTHERN CALIFORNIA

LOS OSOS COMMUNITY SERVICES DISTRICT

MWH Walnut Creek, California

RRM DESIGN GROUP Creating Environments People Enjoy

LOS OSOS WASTEWATER PROJECT LANDSCAPING
PALISADES HARVEST WELL PLANTING PLAN

SHEET B-L-205

N:\2002\1002008 Los Osos WWTF\Planning\product\Pump Stations\autocad\100%submittal\planting\1002008PP_ps.dwg, B-L-205, Feb 06, 2004 5:09pm, BMOsborn

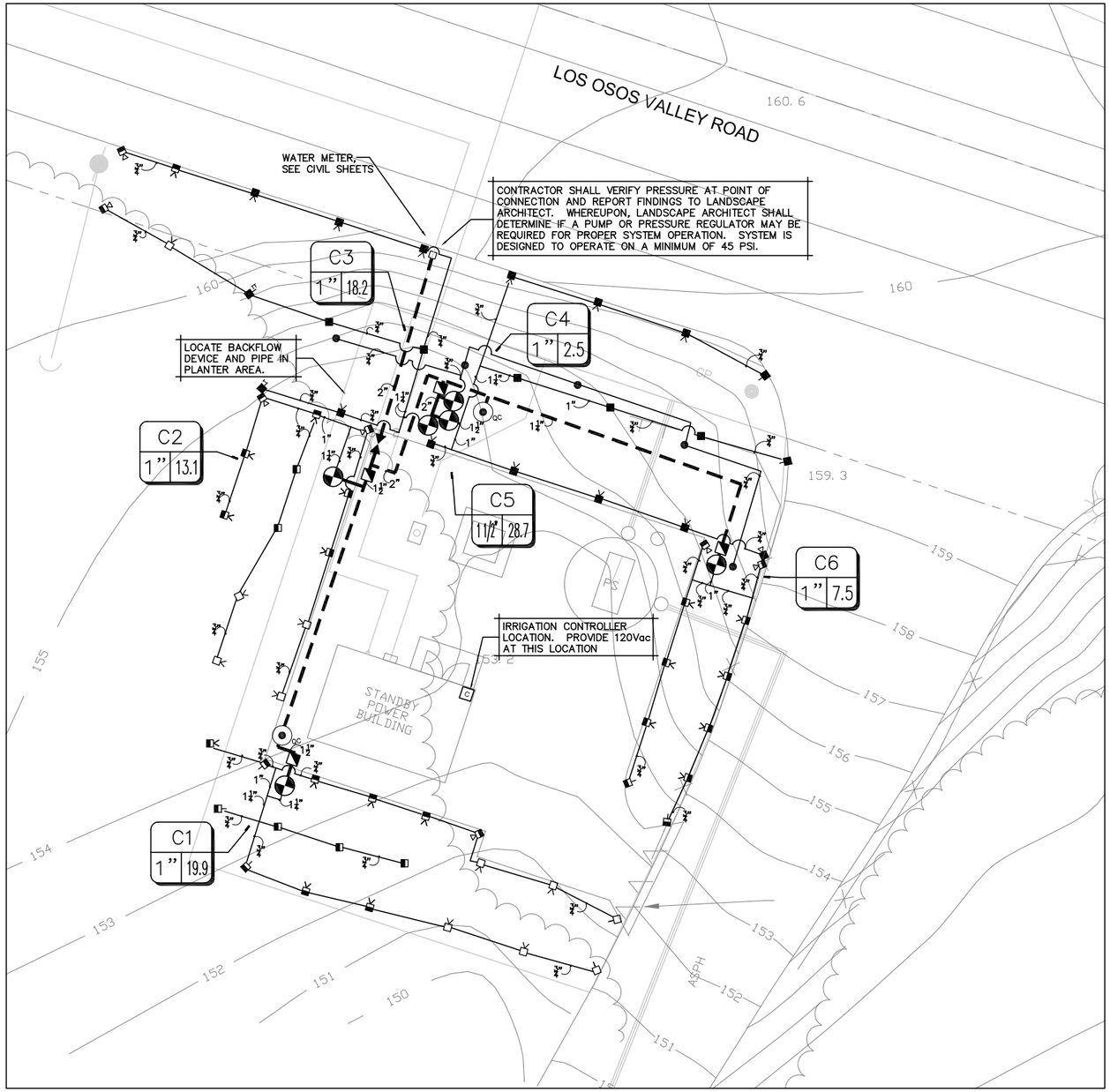

SUNNY OAKS PUMP STATION

north

SCALE: 1" = 10'

IRRIGATION LEGEND

SYMBOL	MANUF.	MODEL NO.	DESCRIPTION	NOZZLE	RAD.	G.P.M.	P.S.I.	REMARKS/ DETAIL
SPRAYS								
	RAINBIRD	1806-SAM	6" POP-UP SPRAY HEAD	15F	15'	3.7	30	SEE DETAIL H, SHEET BC-GL-200
TQ	RAINBIRD	1806-SAM	6" POP-UP SPRAY HEAD	15TQ	15'	2.78	30	SEE DETAIL H, SHEET BC-GL-200
TT	RAINBIRD	1806-SAM	6" POP-UP SPRAY HEAD	15TT	15'	2.48	30	SEE DETAIL H, SHEET BC-GL-200
H	RAINBIRD	1806-SAM	6" POP-UP SPRAY HEAD	15H	15'	1.85	30	SEE DETAIL H, SHEET BC-GL-200
T	RAINBIRD	1806-SAM	6" POP-UP SPRAY HEAD	15T	15'	1.23	30	SEE DETAIL H, SHEET BC-GL-200
Q	RAINBIRD	1806-SAM	6" POP-UP SPRAY HEAD	15Q	15'	.92	30	SEE DETAIL H, SHEET BC-GL-200
–	RAINBIRD	1806-SAM	6" POP-UP SPRAY HEAD	15 VAN	15'	VARIES	30	SEE DETAIL H, SHEET BC-GL-200
	RAINBIRD	1806-SAM	6" POP-UP SPRAY HEAD	12F	12'	2.6	30	SEE DETAIL H, SHEET BC-GL-200
TQ	RAINBIRD	1806-SAM	6" POP-UP SPRAY HEAD	12TQ	12'	1.95	30	SEE DETAIL H, SHEET BC-GL-200
TT	RAINBIRD	1806-SAM	6" POP-UP SPRAY HEAD	12TT	12'	1.74	30	SEE DETAIL H, SHEET BC-GL-200
H	RAINBIRD	1806-SAM	6" POP-UP SPRAY HEAD	12H	12'	1.3	30	SEE DETAIL H, SHEET BC-GL-200
T	RAINBIRD	1806-SAM	6" POP-UP SPRAY HEAD	12T	12'	.87	30	SEE DETAIL H, SHEET BC-GL-200
Q	RAINBIRD	1806-SAM	6" POP-UP SPRAY HEAD	12Q	12'	.65	30	SEE DETAIL H, SHEET BC-GL-200
–	RAINBIRD	1806-SAM	6" POP-UP SPRAY HEAD	12 VAN	12'	VARIES	30	SEE DETAIL H, SHEET BC-GL-200
	RAINBIRD	1806-SAM	6" POP-UP SPRAY HEAD	10 F	10'	1.58	30	SEE DETAIL H, SHEET BC-GL-200
H	RAINBIRD	1806-SAM	6" POP-UP SPRAY HEAD	10 H	10'	.79	30	SEE DETAIL H, SHEET BC-GL-200
T	RAINBIRD	1806-SAM	6" POP-UP SPRAY HEAD	10T	10'	.53	30	SEE DETAIL H, SHEET BC-GL-200
Q	RAINBIRD	1806-SAM	6" POP-UP SPRAY HEAD	10Q	10'	.39	30	SEE DETAIL H, SHEET BC-GL-200
–	RAINBIRD	1806-SAM	6" POP-UP SPRAY HEAD	10 VAN	10'	VARIES	30	SEE DETAIL H, SHEET BC-GL-200
	RAINBIRD	1806-SAM	6" POP-UP SPRAY HEAD	8F	8'	1.05	30	SEE DETAIL H, SHEET BC-GL-200
H	RAINBIRD	1806-SAM	6" POP-UP SPRAY HEAD	8H	8'	.52	30	SEE DETAIL H, SHEET BC-GL-200
T	RAINBIRD	1806-SAM	6" POP-UP SPRAY HEAD	8T	8'	.35	30	SEE DETAIL H, SHEET BC-GL-200
Q	RAINBIRD	1806-SAM	6" POP-UP SPRAY HEAD	8Q	8'	.26	30	SEE DETAIL H, SHEET BC-GL-200
–	RAINBIRD	1806-SAM	6" POP-UP SPRAY HEAD	8 VAN	8'	VARIES	30	SEE DETAIL H, SHEET BC-GL-200
	RAINBIRD	1806-SAM	6" POP-UP SPRAY HEAD	15-SST	4'x30'	1.21	30	SEE DETAIL H, SHEET BC-GL-200
	RAINBIRD	1806-SAM	6" POP-UP SPRAY HEAD	15-EST	4'x15'	0.61	30	SEE DETAIL H, SHEET BC-GL-200
BUBBLERS								
	RAINBIRD	RWS-B-G	TREE ROOT BUBBLER	1402	N/A	0.5	30	SEE DETAIL J, SHEET BC-GL-200
VALVES								
	RAINBIRD	PEB SERIES (INCLUDE PRS DIAL)	PRESSURE REGULATED R.C. VALVE					SEE DETAIL D & E, SHEET BC-GL-200
QC	RAINBIRD	44 LRC	1" QUICK COUPLING VALVE					SEE DETAIL B, SHEET BC-GL-200
	KBI	BTU SERIES	TRUE UNION BALL VALVE					SEE DETAIL C, SHEET BC-GL-200
BACKFLOW DEVICE								
	FEBCO	825YA	1 1/4" BACKFLOW PREVENTOR					SEE DETAIL A, SHEET BC-GL-200
MAIN LINE/ LATERALS & SLEEVES								
	SEE SPECS	SEE SPECS	SCH. 40 PVC MAIN LINE.					SEE PLAN FOR SIZING. SEE DETAIL G, SHEET BC-GL-200
	SEE SPECS	SEE SPECS	SCH 40 PVC SLEEVE					TWO TIMES THE SIZE THE PIPE DIAMETER. SEE DETAIL G, SHEET AD-GL-200
CONTROLLERS								
C	RAINBIRD	ESP-12-RK-LS	12 STA, WALL MOUNT SATELLITE CONTROLLER					SEE DETAIL K, SHEET BC-GL-200

IRRIGATION NOTES

1. SEE SPECIAL & STANDARD SPECIFICATIONS FOR INSTRUCTIONS, APPLICATION, PROCEDURES AND OTHER INFORMATION ON THE INSTALLATION OF THE IRRIGATION SYSTEM.
2. IRRIGATION PLAN IS DIAGRAMATIC. FINAL LOCATION OF PIPING WILL BE DETERMINED AT THE TIME OF INSTALLATION. MAINLINE AND LATERALS SHALL BE PLACED IN THE SAME TRENCH WHEN POSSIBLE. ALL Q.C. VALVES ARE TO BE LOCATED 12" FROM SIDEWALKS, CURBS, ASPHALT & CONCRETE SURFACES.
3. ALL EQUIPMENT REQUIRED BUT NOT SPECIFIED ON THE DRAWING, TO COMPLETE THE WORK, SHALL BE PROVIDED BY THE IRRIGATION CONTRACTOR.
4. INSTALL ALL EQUIPMENT IN ACCORDANCE WITH MANUFACTURER'S INSTRUCTIONS AND/OR SPECIFICATIONS.
5. TRENCH BACKFILL MATERIAL SHALL BE FREE OF ROCKS, GLASS, AND OTHER EXTRANEOUS MATERIALS. BACKFILL WILL BE COMPACTED TO 90% MAXIMUM DRY DENSITY.
6. IRRIGATION DESIGN IS BASED ON A MINIMUM 45 PSI STATIC WATER PRESSURE BEFORE BACKFLOW DEVICE. IF WATER PRESSURE IS LESS, CONTRACTOR IS TO CALL THE LANDSCAPE ARCHITECT BEFORE COMMENCING WITH THE WORK.
7. ALL VALVE CONTROL WIRE SHALL BE AWG 14 TYPE UF, 600 VOLT TEST, DIRECT BURIAL.
8. CONTROLLER POWER WIRE SHALL BE 120 VOLT WIRE AND PLACED IN 3/4" CONDUIT. POWER TO BE FROM ELECTRICAL PANEL. 120 VOLT SERVICE AND HOOK-UP TO THE CONTROLLER SHALL BE COMPLETED BY A LICENSED ELECTRICAL CONTRACTOR. THIS COST IS TO BE A PART OF THE LANDSCAPE CONTRACTOR'S BID.
9. CONNECT ALL DIRECT BURIAL WIRES USING 3M'S "DBY-DIRECT BURIAL SPLICE KIT"
10. CONTRACTOR SHALL PULL THREE (3) EXTRA WIRES AT EACH BANK OF REMOTE CONTROL VALVES OR MANIFOLD .
11. CONTRACTOR SHALL PROVIDE #10 COMMON WIRE TO ALL REMOTE CONTROL VALVES.
12. CONTRACTOR SHALL FAMILIARIZE HIMSELF WITH THE PLANS AND SITE CONDITIONS PRIOR TO BEGINNING WORK. SHOULD CONFLICTING INFORMATION BE FOUND ON THE PLANS, THE CONTRACTOR SHALL NOTIFY THE PROJECT LANDSCAPE ARCHITECT BEFORE PROCEEDING WITH THE WORK IN QUESTION.
13. DO NOT WILLFULLY INSTALL THE IRRIGATION SYSTEM AS SHOWN ON THE DRAWINGS WHEN IT IS OBVIOUS IN THE FIELD THAT OBSTRUCTIONS, GRADE DIFFERENCES OR DIFFERENCES IN THE AREA DIMENSIONS EXIST THAT MIGHT NOT HAVE BEEN CONSIDERED IN THE ENGINEERING. SUCH OBSTRUCTIONS OR DIFFERENCES SHOULD BE BROUGHT TO THE ATTENTION OF THE LANDSCAPE ARCHITECT. IN THE EVENT THIS NOTIFICATION IS NOT PERFORMED, THE CONTRACTOR SHALL ASSUME FULL RESPONSIBILITY FOR ANY REVISIONS NECESSARY AT NO EXPENSE TO THE OWNER.
14. CONTRACTOR SHALL COORDINATE POWER TO CONTROLLERS AND DEDICATE ONE (1) 20 AMP BREAKER FOR EACH CONTROLLER. THE AUTHORIZED REPRESENTATIVE SHALL REVIEW CONTROLLER LOCATIONS PRIOR TO INSTALLATION.
15. CONTRACTOR SHALL SLEEVE UNDER PAVING PER PLANS AND SPECIFICATIONS.
16. SPLICING OF 24 VOLT WIRES WILL NOT BE PERMITTED EXCEPT IN VALVE BOXES. LEAVE A 24" COIL OF EXCESS WIRE AT EACH SPLICE. LABEL ALL WIRES W/ WATERPROOF MARKERS AT ALL SPLICES AND VALVE MANIFOLDS.
17. CONTRACTOR SHALL BE RESPONSIBLE FOR THE INSTALLATION OF ALL MATERIAL APPEARING ON PLAN.
18. ALL EXISTING UTILITIES, WATER LINES AND FIRE HYDRANTS SHALL REMAIN CONNECTED AND IN FULL CONTINUOUS OPERATION DURING AND FOLLOWING ALL CONTRACT WORK EXCEPT AS SHOWN ON THIS SHEET.

LICENSED LANDSCAPE ARCHITECT
ANTHONY KEITH NO. 1872
10/31/04
Date
STATE OF CALIFORNIA

REV	DATE	BY	DESCRIPTION

SCALE: 1"=10'-0"

WARNING: 0 1/2 1 — IF THIS BAR DOES NOT MEASURE 1" THEN DRAWING IS NOT TO SCALE

DESIGNED TK/CD
DRAWN C. DUFOUR
CHECKED T.KEITH

SUBMITTED BY
C31069 LICENSE NO. 2/16/2004 DATE
C23892 LICENSE NO. 2/16/2004 DATE

DIGALERT — DIAL TOLL FREE 1-800-642-2444 AT LEAST TWO DAYS BEFORE YOU DIG — UNDERGROUND SERVICE ALERT OF NORTHERN CALIFORNIA

LOS OSOS COMMUNITY SERVICES DISTRICT

MWH Walnut Creek, California

RRM DESIGN GROUP — Creating Environments People Enjoy

LOS OSOS WASTEWATER PROJECT
LANDSCAPING
SUNNY OAKS PUMP STATION
IRRIGATION PLAN

SHEET C-L-200

N:\2002\1002008 Los Osos WWTF\Planning\product\Pump Stations\autocad\100%submittal\irrigation\1002008P_ps.dwg, C-L-200, Feb 06, 2004 4:24pm, CBDufour

IRRIGATION NOTES

1. SEE SPECIAL & STANDARD SPECIFICATIONS FOR INSTRUCTIONS, APPLICATION, PROCEDURES AND OTHER INFORMATION ON THE INSTALLATION OF THE IRRIGATION SYSTEM.
2. IRRIGATION PLAN IS DIAGRAMATIC. FINAL LOCATION OF PIPING WILL BE DETERMINED AT THE TIME OF INSTALLATION. MAINLINE AND LATERALS SHALL BE PLACED IN THE SAME TRENCH WHEN POSSIBLE. ALL Q.C. VALVES ARE TO BE LOCATED 12" FROM SIDEWALKS, CURBS, ASPHALT & CONCRETE SURFACES.
3. ALL EQUIPMENT REQUIRED BUT NOT SPECIFIED ON THE DRAWING, TO COMPLETE THE WORK, SHALL BE PROVIDED BY THE IRRIGATION CONTRACTOR.
4. INSTALL ALL EQUIPMENT IN ACCORDANCE WITH MANUFACTURER'S INSTRUCTIONS AND/OR SPECIFICATIONS.
5. TRENCH BACKFILL MATERIAL SHALL BE FREE OF ROCKS, GLASS, AND OTHER EXTRANEOUS MATERIALS. BACKFILL WILL BE COMPACTED TO 90% MAXIMUM DRY DENSITY.
6. IRRIGATION DESIGN IS BASED ON A MINIMUM OF 95 PSI STATIC WATER PRESSURE BEFORE BACKFLOW DEVICE. IF WATER PRESSURE IS LESS, CONTRACTOR IS TO CALL THE LANDSCAPE ARCHITECT BEFORE COMMENCING WITH THE WORK.
7. ALL VALVE CONTROL WIRE SHALL BE AWG 14 TYPE UF, 600 VOLT TEST, DIRECT BURIAL.
8. CONTROLLER POWER WIRE SHALL BE 120 VOLT WIRE AND PLACED IN 3/4" CONDUIT. POWER TO BE FROM ELECTRICAL PANEL. 120 VOLT SERVICE AND HOOK-UP TO THE CONTROLLER SHALL BE COMPLETED BY A LICENSED ELECTRICAL CONTRACTOR. THIS COST IS TO BE A PART OF THE LANDSCAPE CONTRACTOR'S BID.
9. CONNECT ALL DIRECT BURIAL WIRES USING 3M'S "DBY-DIRECT BURIAL SPLICE KIT"
10. CONTRACTOR SHALL PULL THREE (3) EXTRA WIRES AT EACH BANK OF REMOTE CONTROL VALVES OR MANIFOLD .
11. CONTRACTOR SHALL PROVIDE #10 COMMON WIRE TO ALL REMOTE CONTROL VALVES.
12. CONTRACTOR SHALL FAMILIARIZE HIMSELF WITH THE PLANS AND SITE CONDITIONS PRIOR TO BEGINNING WORK. SHOULD CONFLICTING INFORMATION BE FOUND ON THE PLANS, THE CONTRACTOR SHALL NOTIFY THE PROJECT LANDSCAPE ARCHITECT BEFORE PROCEEDING WITH THE WORK IN QUESTION.
13. DO NOT WILLFULLY INSTALL THE IRRIGATION SYSTEM AS SHOWN ON THE DRAWINGS WHEN IT IS OBVIOUS IN THE FIELD THAT OBSTRUCTIONS, GRADE DIFFERENCES OR DIFFERENCES IN THE AREA DIMENSIONS EXIST THAT MIGHT NOT HAVE BEEN CONSIDERED IN THE ENGINEERING. SUCH OBSTRUCTIONS OR DIFFERENCES SHOULD BE BROUGHT TO THE ATTENTION OF THE LANDSCAPE ARCHITECT. IN THE EVENT THIS NOTIFICATION IS NOT PERFORMED, THE CONTRACTOR SHALL ASSUME FULL RESPONSIBILITY FOR ANY REVISIONS NECESSARY AT NO EXPENSE TO THE OWNER.
14. CONTRACTOR SHALL COORDINATE POWER TO CONTROLLERS AND DEDICATE ONE (1) 20 AMP BREAKER FOR EACH CONTROLLER. THE AUTHORIZED REPRESENTATIVE SHALL REVIEW CONTROLLER LOCATIONS PRIOR TO INSTALLATION.
15. CONTRACTOR SHALL SLEEVE UNDER PAVING PER PLANS AND SPECIFICATIONS.
16. SPLICING OF 24 VOLT WIRES WILL NOT BE PERMITTED EXCEPT IN VALVE BOXES. LEAVE A 24" COIL OF EXCESS WIRE AT EACH SPLICE. LABEL ALL WIRES W/ WATERPROOF MARKERS AT ALL SPLICES AND VALVE MANIFOLDS.
17. CONTRACTOR SHALL BE RESPONSIBLE FOR THE INSTALLATION OF ALL MATERIAL APPEARING ON PLAN.
18. ALL EXISTING UTILITIES, WATER LINES AND FIRE HYDRANTS SHALL REMAIN CONNECTED AND IN FULL CONTINUOUS OPERATION DURING AND FOLLOWING ALL CONTRACT WORK EXCEPT AS SHOWN ON THIS SHEET.

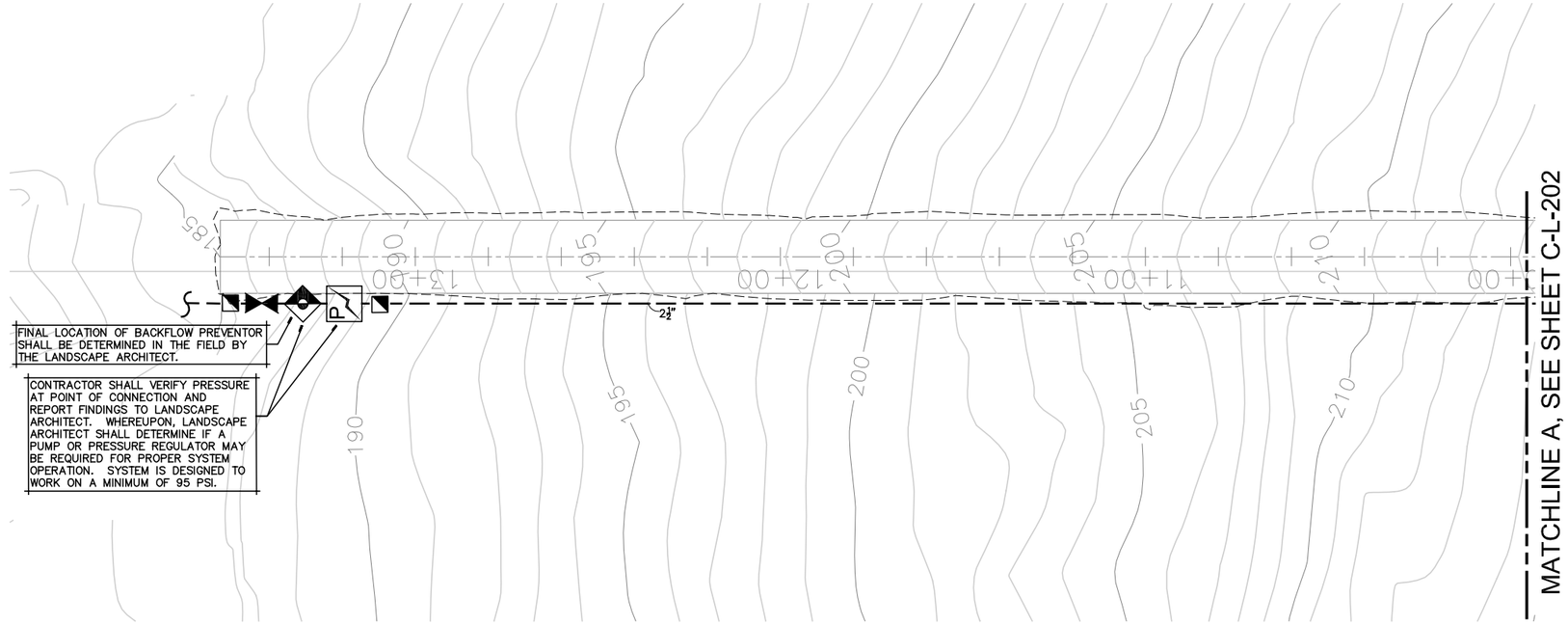

BRODERSON EFFLUENT DISPOSAL SITE

north

SCALE: 1" = 20'

IRRIGATION LEGEND

SYMBOL	MANUF.	MODEL NO.	DESCRIPTION					REMARKS/ DETAIL
ROTORS								
	HUNTER	I-20-HP-36V	POP-UP ROTOR	#8	44'	6.8	50	SEE DETAIL H, SHEET BC-GL-200
	HUNTER	I-20-HP-ADV	POP-UP ROTOR	#8	44'	6.8	50	SEE DETAIL H, SHEET BC-GL-200
	HUNTER	PGJ-12-V	POP-UP ROTOR	#1.5	22'	1.7	50	SEE DETAIL H, SHEET BC-GL-200
VALVES								
	RAINBIRD	PEB-PRS SERIES	PRESSURE REGULATING R.C. VALVES					SEE DETAIL D & E, SHEET BC-GL-200
QK	RAINBIRD	44 LRC	1" QUICK COUPLING VALVE					SEE DETAIL B, SHEET BC-GL-200
	NIBCO	T113 SERIES	RESILIENT WEDGE GATE VALVE					SEE DETAIL C, SHEET BC-GL-201
BACKFLOW DEVICE								
	FEBCO	825YA	1 1/2" BACKFLOW PREVENTOR					SEE DETAIL A, SHEET BC-GL-200
MAIN LINE/ LATERALS & SLEEVES								
	SEE SPECS	SEE SPECS	SCH. 40 PVC MAIN LINE. SEE PLAN FOR SIZING.					SEE PLAN FOR SIZING. SEE DETAIL G, SHEET BC-GL-200
	SEE SPECS	SEE SPECS	SCH 40 PVC SLEEVE					TWO TIMES THE SIZE THE PIPE DIAMETER. SEE DETAIL G, SHEET BC-GL-200
CONTROLLERS								
C	RAINBIRD	ESP-40-RK-LS	40 STA. PED. MOUNT SATELLITE CONTROLLER					SEE DETAIL A, SHEET BC-GL-201

VALVE KEY

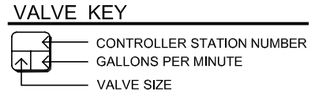

LICENSED LANDSCAPE ARCHITECT
ANTHONY KEITH NO. 3623
10/31/04
Date
STATE OF CALIFORNIA

REV	DATE	BY	DESCRIPTION

SCALE 1"=20'-0"

WARNING 0 1/2 1 — IF THIS BAR DOES NOT MEASURE 1" THEN DRAWING IS NOT TO SCALE

DESIGNED TK/CD
DRAWN C. DUFOUR
CHECKED T.KEITH

SUBMITTED BY
C31069 LICENSE NO. 2/16/2004 DATE
C23892 LICENSE NO. 2/16/2004 DATE

DIGALERT DIAL TOLL FREE 1-800-642-2444 AT LEAST TWO DAYS BEFORE YOU DIG UNDERGROUND SERVICE ALERT OF NORTHERN CALIFORNIA

LOS OSOS COMMUNITY SERVICES DISTRICT

MWH Walnut Creek, California

RRM DESIGN GROUP Creating Environments People Enjoy

LOS OSOS WASTEWATER PROJECT
LANDSCAPING
BRODERSON EDS
IRRIGATION PLAN

SHEET C-L-201

N:\2002\1002008 Los Osos WWTF\Planning\product\Pump Stations\autocad\100%submittal\irrigation\1002008P_eds.dwg, C-L-201, Feb 06, 2004 4:31pm, CBDufour

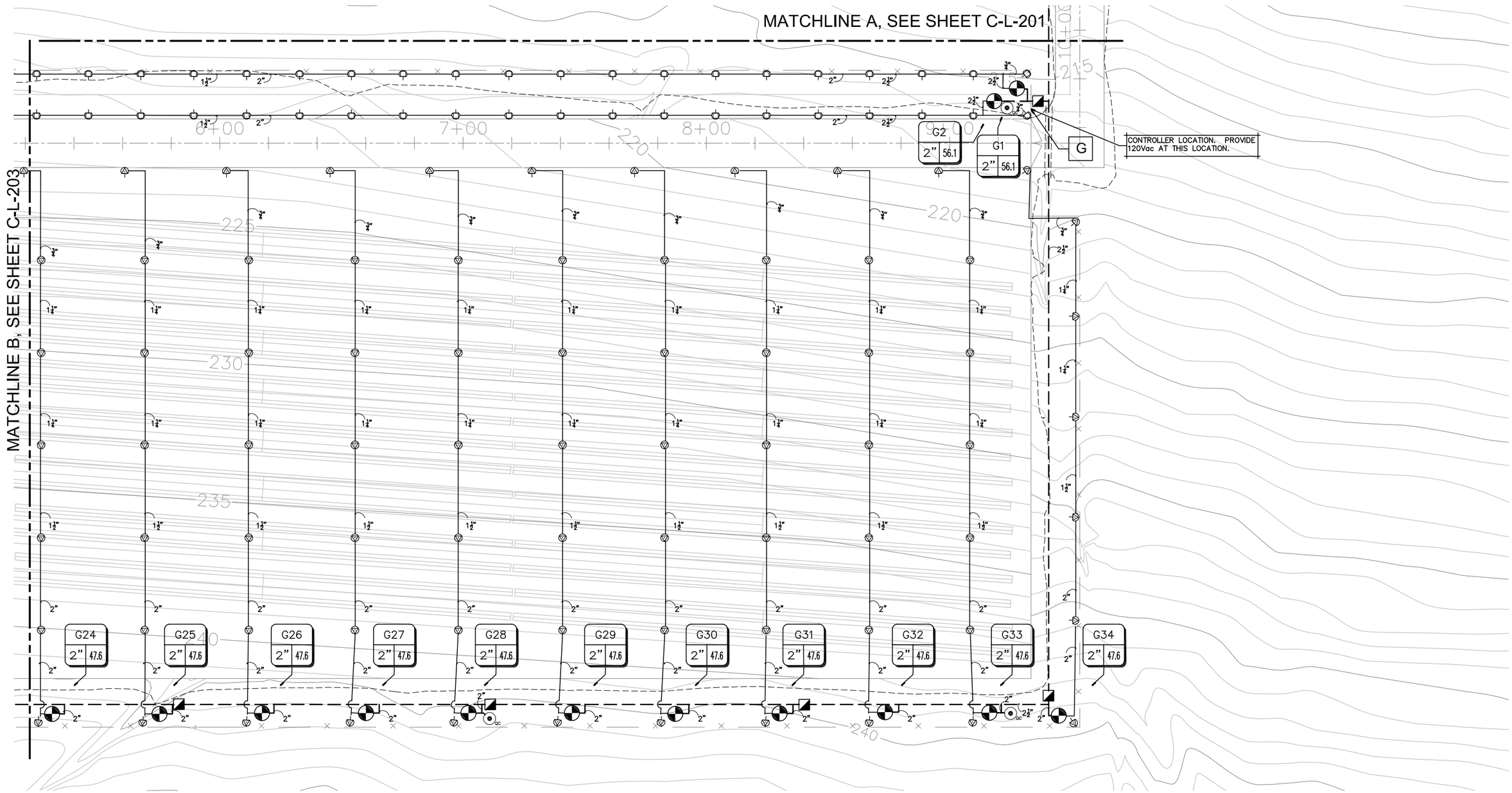

BRODERSON EFFLUENT DISPOSAL SITE

SCALE: 1" = 20'

LICENSED LANDSCAPE ARCHITECT
ANTHONY KEITH NO. 3673
10/31/04
STATE OF CALIFORNIA

REV	DATE	BY	DESCRIPTION

SCALE 1"=20'-0"

WARNING 0 1/2 1 IF THIS BAR DOES NOT MEASURE 1" THEN DRAWING IS NOT TO SCALE

DESIGNED TK/CD
DRAWN C. DUFOUR
CHECKED T.KEITH

SUBMITTED BY
C31069 LICENSE NO. 2/16/2004 DATE
Steven J. Hyland C23892 LICENSE NO. 2/16/2004 DATE

DIGALERT DIAL TOLL FREE 1-800-642-2444 AT LEAST TWO DAYS BEFORE YOU DIG UNDERGROUND SERVICE ALERT OF NORTHERN CALIFORNIA

LOS OSOS COMMUNITY SERVICES DISTRICT

MWH Walnut Creek, California

RRM DESIGN GROUP Creating Environments People Enjoy

LOS OSOS WASTEWATER PROJECT LANDSCAPING
BRODERSON EDS IRRIGATION PLAN

SHEET C-L-202

N:\2002\1002008 Los Osos WWTF\Planning\product\Pump Stations\autocad\100%submittal\irrigation\1002008IP_eds.dwg, C-L-202, Feb 06, 2004 4:31pm, CBDufour

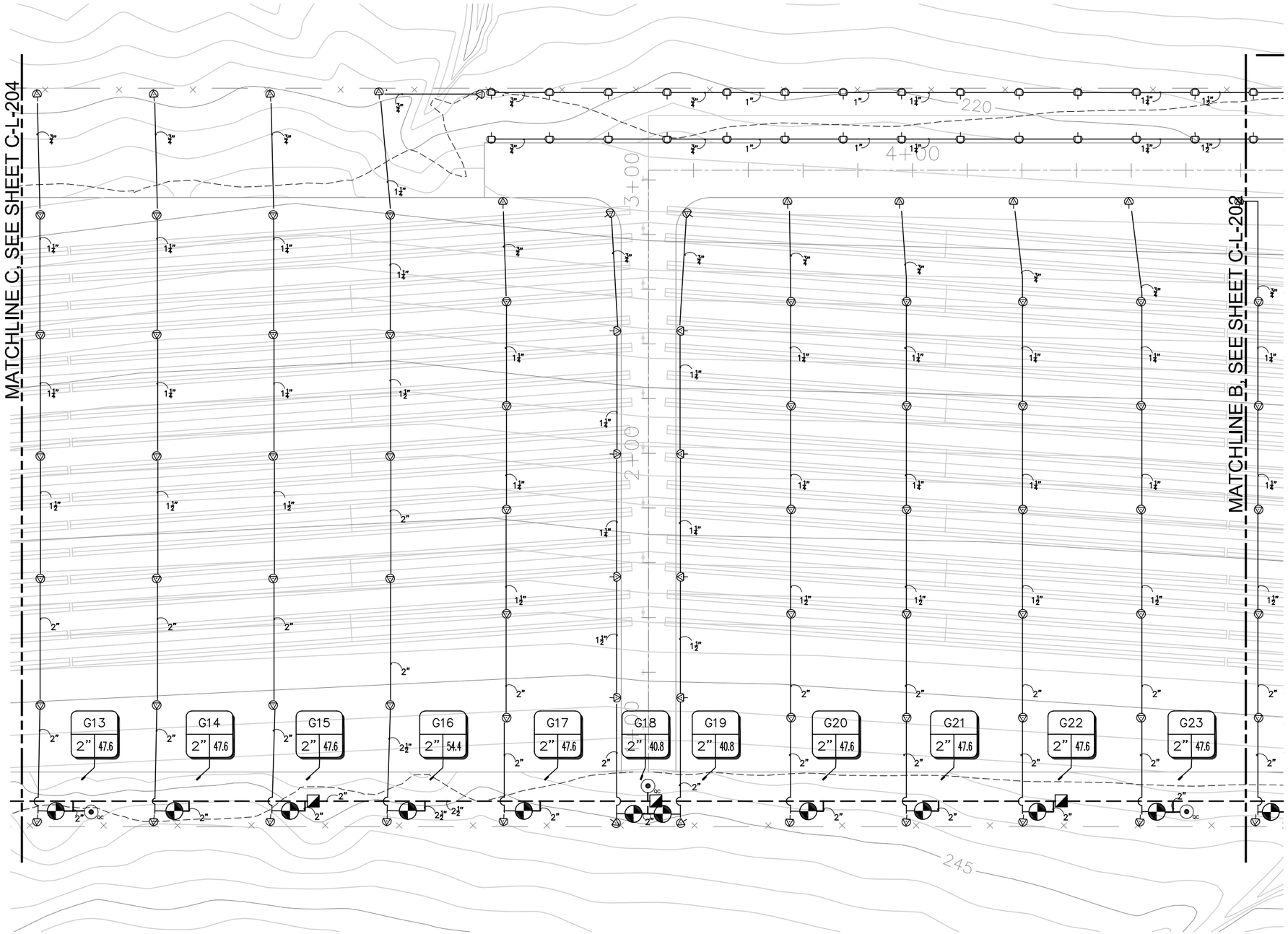

BRODERSON EFFLUENT DISPOSAL SITE

north

SCALE: 1" = 20'

LICENSED LANDSCAPE ARCHITECT
ANTHONY KEITH NO. 3823
10/31/04
Date
STATE OF CALIFORNIA

REV	DATE	BY	DESCRIPTION

SCALE
1"=20'-0"

WARNING
0 1/2 1
IF THIS BAR DOES NOT MEASURE 1" THEN DRAWING IS NOT TO SCALE

DESIGNED TK/CD
DRAWN C. DUFOUR
CHECKED T.KEITH

SUBMITTED BY
Steven J. Hyland
C31069 LICENSE NO. 2/16/2004 DATE
C23892 LICENSE NO. 2/16/2004 DATE

DIGALERT
DIAL TOLL FREE
1-800-642-2444
AT LEAST TWO DAYS BEFORE YOU DIG
UNDERGROUND SERVICE ALERT OF NORTHERN CALIFORNIA

LOS OSOS
COMMUNITY SERVICES DISTRICT

MWH
Walnut Creek, California

RRM DESIGN GROUP
Country Environment Park Style
3765 South Higuera Street, P.O. Box 1567 • San Luis Obispo, California 93406
Phone 805/543-1794 • Fax 805/543-3235 • rrmdesign@rrmdesign.com
In memoriam, Joshua M. Roth • Jack Rhoads, AIA, FAIA, CA 2005 • Jim Rhoads, Architect Emeritus

LOS OSOS WASTEWATER PROJECT
LANDSCAPING
BRODERSON EDS
IRRIGATION PLAN

SHEET
C-L-203

N:\2002\1002008 Los Osos WWT\Planning\product\Pump Stations\autocad\100%submittal\irrigation\1002008P_eds.dwg, C-L-203, Feb 06, 2004 4:31pm, CBDufour

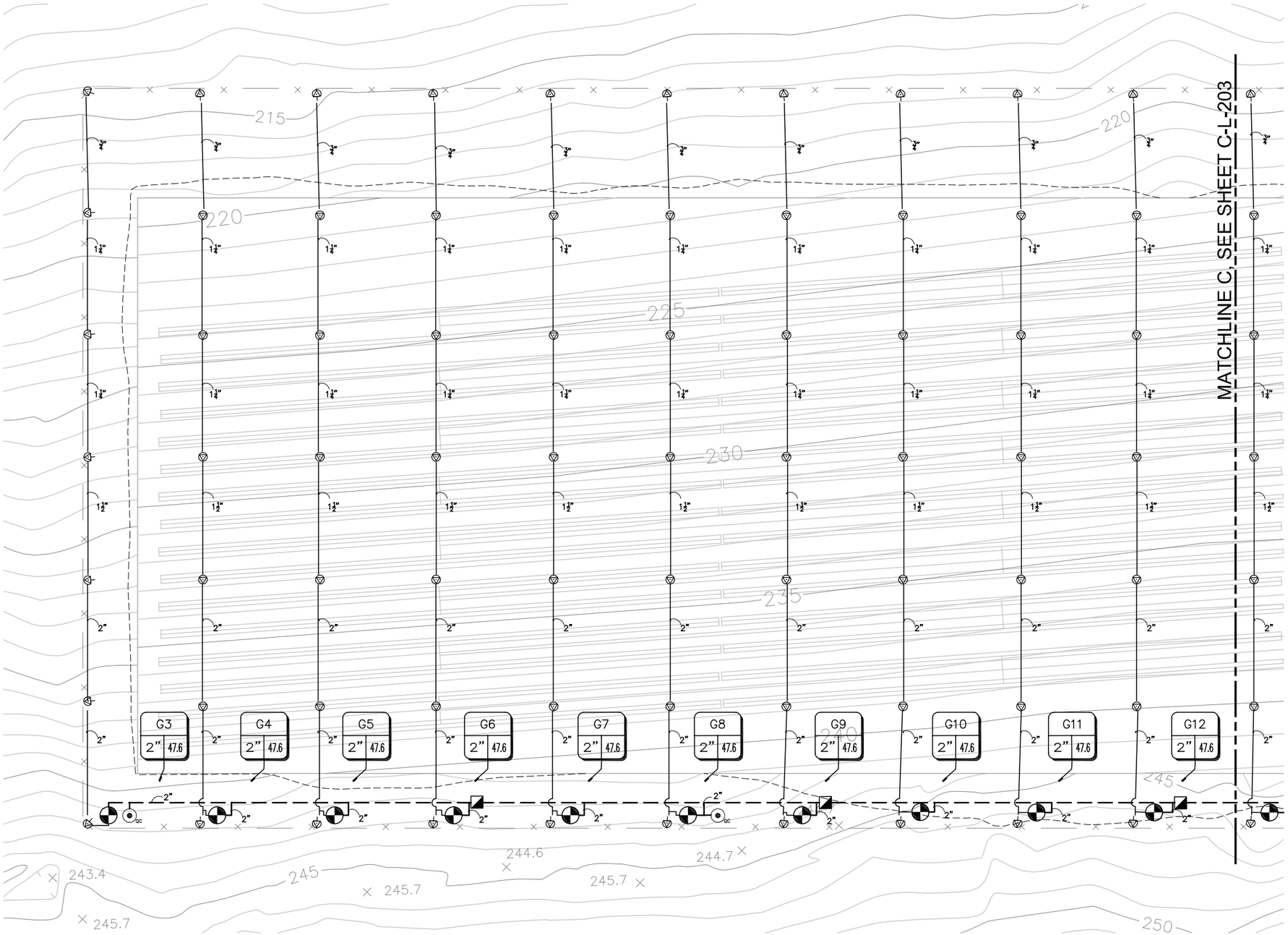

BRODERSON EFFLUENT DISPOSAL SITE

north

SCALE: 1" = 20'

LICENSED LANDSCAPE ARCHITECT
ANTHONY KEITH NO. 3673
10/31/04
2-6-04
STATE OF CALIFORNIA

REV	DATE	BY	DESCRIPTION

SCALE 1"=20'-0"

WARNING 0 1/2 1 IF THIS BAR DOES NOT MEASURE 1" THEN DRAWING IS NOT TO SCALE

DESIGNED TK/CD
DRAWN C. DUFOUR
CHECKED T.KEITH

SUBMITTED BY
C31069 LICENSE NO. 2/16/2004 DATE
Steven J. Hyland C23892 LICENSE NO. 2/16/2004 DATE

DIGALERT
DIAL TOLL FREE 1-800-642-2444 AT LEAST TWO DAYS BEFORE YOU DIG
UNDERGROUND SERVICE ALERT OF NORTHERN CALIFORNIA

LOS OSOS COMMUNITY SERVICES DISTRICT

MWH Walnut Creek, California

RRM DESIGN GROUP
Creating Environments People Enjoy

LOS OSOS WASTEWATER PROJECT LANDSCAPING
BRODERSON EDS IRRIGATION PLAN

SHEET C-L-204

N:\2002\1002008 Los Osos WWTF\Planning\product\Pump Stations\autocad\100%submittal\irrigation\1002008IP_eds.dwg, C-L-204, Feb 06, 2004 4:32pm, CBDufour

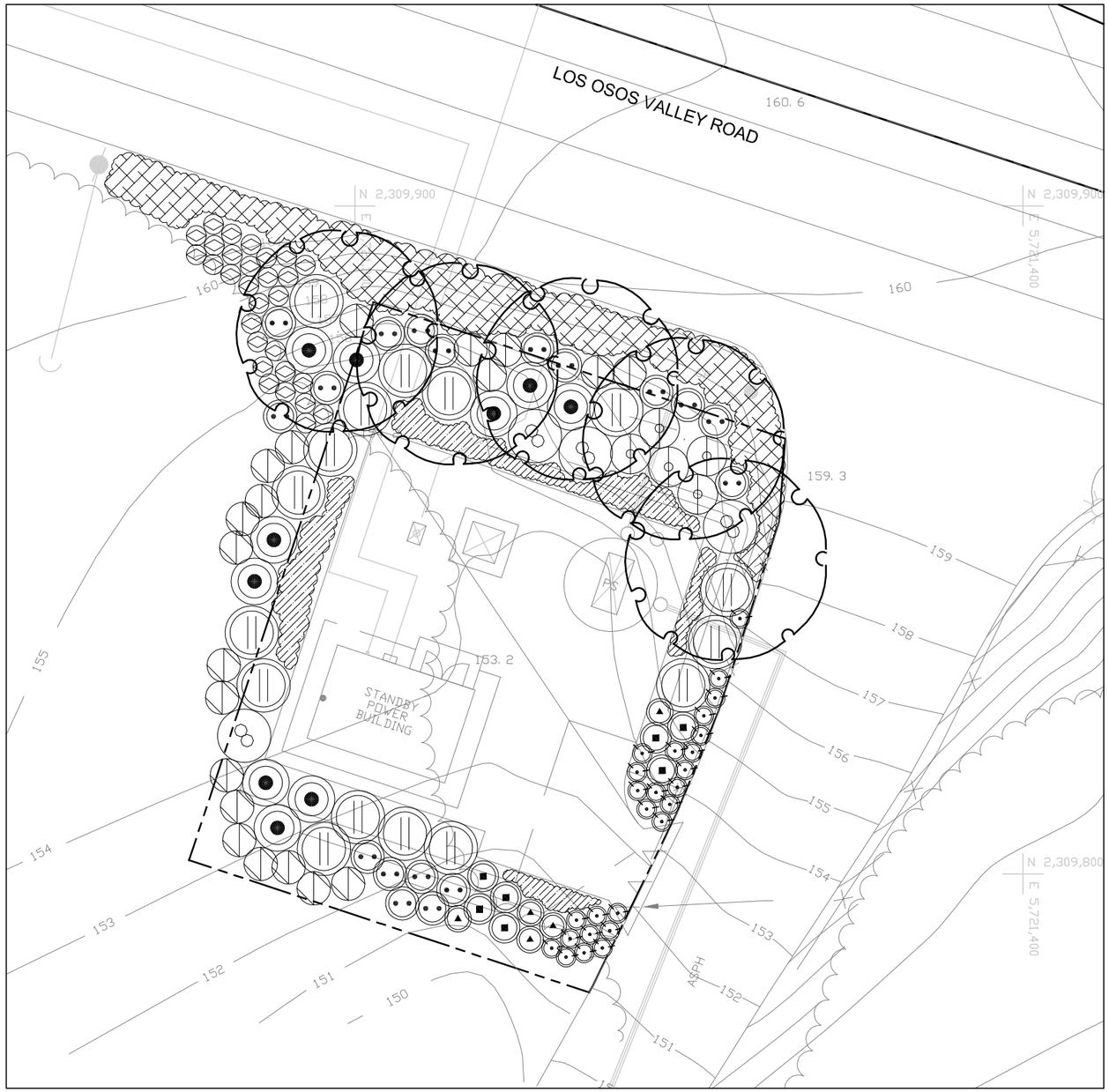

PLANT LEGEND

SYMBOL	BOTANICAL NAME	COMMON NAME	SIZE	QUANTITY	REMARKS
TREES					
	QUERCUS AGRIFOLIA	QUERCUS AGRIFOLIA	24" BOX	5	SEE DETAIL A, SHEET BC-GL-202
SHRUBS					
	ARCTOSTAPHYLOS MORROENSIS	PARK VIEW MANZANITA	5 GAL.	20	SEE DETAIL B, SHEET BC-GL-202
	CEANOTHUS CUNEATUS	BUCKBRUSH	5 GAL.	16	SEE DETAIL B, SHEET BC-GL-202
	HETEROMELES ARBUTIFOLIA	TOYON	15 GAL.	5	SEE DETAIL B, SHEET BC-GL-202
	LOTUS SCOPARIUS	DEER WEED	1 GAL.	29	SEE DETAIL B, SHEET BC-GL-202
	RHAMNUS CALIFORNICA	CALIFORNIA COFFEEBERRY	15 GAL.	4	SEE DETAIL B, SHEET BC-GL-202
	RHAMNUS CROCEA	REDBERRY	15 GAL.	10	SEE DETAIL B, SHEET BC-GL-202
	RIBES SPECIOSUM	FUSCHIA-FLOWERED GOOSEBERRY	5 GAL.	18	SEE DETAIL B, SHEET BC-GL-202
	SALVIA MELLIFERA	BLACK SAGE	1 GAL.	7	SEE DETAIL B, SHEET BC-GL-202
	SOLANUM DOUGLASII	WHITE NIGHTSHADE	1 GAL.	5	SEE DETAIL B, SHEET BC-GL-202
	SOLANUM XANTI	PURPLE NIGHTSHADE	1 GAL.	26	SEE DETAIL B, SHEET BC-GL-202
GROUND COVER					
	BACCHARIS PILULARIS 'PIGEON POINT'	DWARF COYOTE BUSH	1 GAL.	12	6' O.C., SEE DETAIL C, SHEET BC-GL-202
	SALVIA MELLIFERA 'REPENS'	CREEPING BLACK SAGE	1 GAL.	29	6' O.C., SEE DETAIL C, SHEET BC-GL-202

PLANTING NOTES

1. PLANT LIST IS FOR CONVENIENCE OF CONTRACTOR ONLY. IN CASE OF DISCREPANCIES BETWEEN THE PLANS AND THE LIST, PLANS SHALL PREVAIL.
2. PLANT LOCATIONS SHOWN ON THE PLANS ARE DIAGRAMATIC. CONTRACTOR SHALL LOCATE ALL PLANT MATERIAL UNDER THE DIRECTION OF THE CITY ENGINEER OR AUTHORIZED REPRESENTATIVE PRIOR TO PLANTING HOLE EXCAVATION.
3. THE CITY ENGINEER OR AUTHORIZED REPRESENTATIVE RESERVES THE RIGHT TO MAKE SUBSTITUTIONS, ADDITIONS, AND DELETIONS TO THE PLANTING LAYOUT AS WORK PROGRESSES.
4. ALL GROUNDCOVER SHALL BE TRIANGULARLY SPACED UNLESS OTHERWISE NOTED.
5. CONTRACTOR SHALL INSTALL A 3" LAYER OF 'STRINGY CEDAR BARK' MULCH IN ALL PLANTING AREAS A MIN. 12" BEYOND EXTENT OF ALL PLANTS

SUNNY OAKS PUMP STATION

north

SCALE: 1" = 10'

LICENSED LANDSCAPE ARCHITECT
ANTHONY KEITH NO. 3823
10/31/04
DATE
STATE OF CALIFORNIA

REV	DATE	BY	DESCRIPTION

SCALE 1"=10'-0"

WARNING 0 1/2 1 — IF THIS BAR DOES NOT MEASURE 1" THEN DRAWING IS NOT TO SCALE

DESIGNED TK/BMO
DRAWN B.OSBORN
CHECKED T.KEITH

SUBMITTED BY
C31069 LICENSE NO. 2/16/2004 DATE
C23892 LICENSE NO. 2/16/2004 DATE

DIGALERT DIAL TOLL FREE 1-800-642-2444 AT LEAST TWO DAYS BEFORE YOU DIG — UNDERGROUND SERVICE ALERT OF NORTHERN CALIFORNIA

LOS OSOS COMMUNITY SERVICES DISTRICT

MWH Walnut Creek, California

RRM DESIGN GROUP Creating Environments People Enjoy

LOS OSOS WASTEWATER PROJECT
LANDSCAPING
SUNNY OAKS PUMP STATION
PLANTING PLAN

SHEET C-L-205

N:\2002\10020008 Los Osos WWTP\Planning\product\Pump Stations\autocad\100%submittal\planting\100200BPP_ps.dwg, C-L-205, Feb 06, 2004 5:08pm, BMOsborn

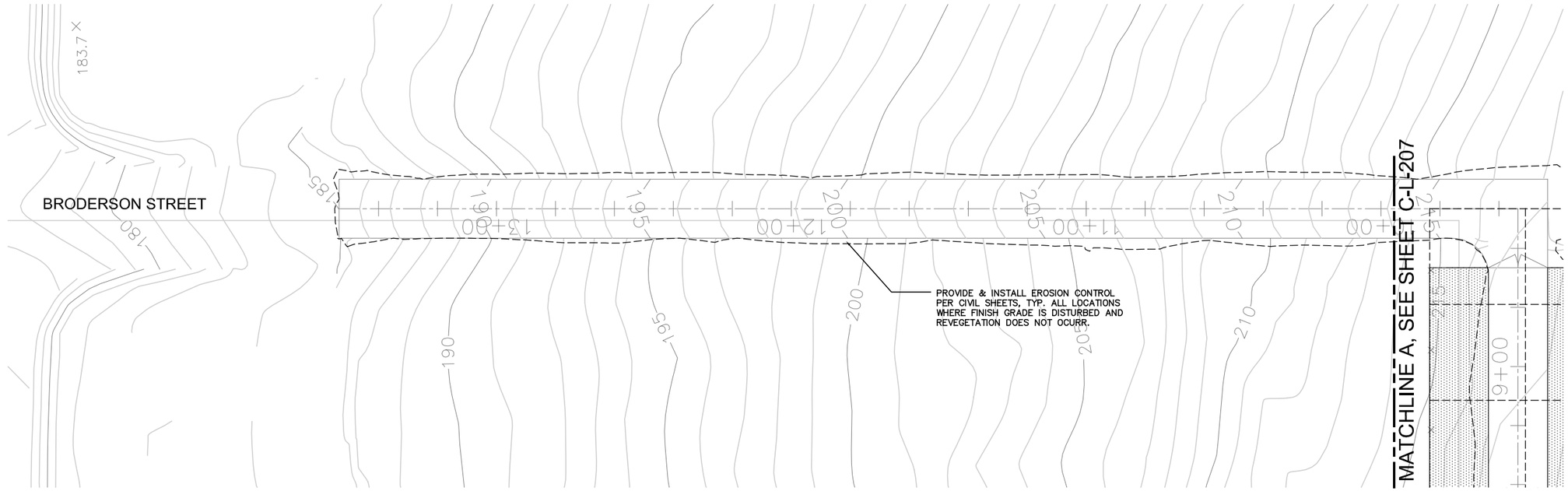

north

SCALE: 1" = 20'

BRODERSON EFFLUENT DISPOSAL SITE

PLANT LEGEND

SYMBOL	BOTANICAL NAME	COMMON NAME	SIZE	REMARKS
REVEGETATIVE PLANT MIX 'A'				
	CAREX PRAEGRACILIS	CLUSTERED FIELD SEDGE	1 GALLON	SEE DETAIL D, SHEET BC-GL-202
	ENCELIA CALIFORNICA	ENCELIA	1 GALLON	SEE DETAIL D, SHEET BC-GL-202
	HAPLOPAPPUS SQUAROSSUS	YELLOW SQUIRREL COVER	1 GALLON	SEE DETAIL D, SHEET BC-GL-202
	LESSINGIA FILAGINOFOLIA	CALIFONIA ASTER	1 GALLON	SEE DETAIL D, SHEET BC-GL-202
	LUPINUS CHAMISSONIS	SILVER DUNE LUPINE	1 GALLON	SEE DETAIL D, SHEET BC-GL-202
	MIMULUS AURANTIACUS	MONKEYFLOWER	1 GALLON	SEE DETAIL D, SHEET BC-GL-202
	RIBES SPECIOSUM	FUSCHIA-FLOWERED GOOSEBERRY	1 GALLON	SEE DETAIL D, SHEET BC-GL-202
	SALVIA APIANA	WHITE SAGE	1 GALLON	SEE DETAIL D, SHEET BC-GL-202
	SALVIA LEUCOPHYLLA	PURPLE SAGE	1 GALLON	SEE DETAIL D, SHEET BC-GL-202
	SALVIA MELLIFERA	BLACK SAGE	1 GALLON	SEE DETAIL D, SHEET BC-GL-202

SYMBOL	BOTANICAL NAME	COMMON NAME	SIZE	REMARKS
REVEGETATIVE PLANT MIX 'B'				
	ARTEMESIA CALIFORNICA	CALIFORNIA SAGEBRUSH	1 GALLON	SEE DETAIL D, SHEET BC-GL-202
	BACCHARIS PILULARIS	COYOTE BRUSH	1 GALLON	SEE DETAIL D, SHEET BC-GL-202
	CAREX PRAEGRACILIS	CLUSTERED FIELD SEDGE	1 GALLON	SEE DETAIL D, SHEET BC-GL-202
	ENCELIA CALIFORNICA	ENCELIA	1 GALLON	SEE DETAIL D, SHEET BC-GL-202
	ERIGONIUM PARVIFOLIUM	CLIFF BUCKWHEAT	1 GALLON	SEE DETAIL D, SHEET BC-GL-202
	HAPLOPAPPUS SQUAROSSUS	YELLOW SQUIRREL COVER	1 GALLON	SEE DETAIL D, SHEET BC-GL-202
	LESSINGIA FILAGINOFOLIA	CALIFONIA ASTER	1 GALLON	SEE DETAIL D, SHEET BC-GL-202
	LUPINUS CHAMISSONIS	SILVER DUNE LUPINE	1 GALLON	SEE DETAIL D, SHEET BC-GL-202
	MIMULUS AURANTIACUS	MONKEYFLOWER	1 GALLON	SEE DETAIL D, SHEET BC-GL-202
	RIBES SPECIOSUM	FUSCHIA-FLOWERED GOOSEBERRY	1 GALLON	SEE DETAIL D, SHEET BC-GL-202
	SALVIA APIANA	WHITE SAGE	1 GALLON	SEE DETAIL D, SHEET BC-GL-202
	SALVIA LEUCOPHYLLA	PURPLE SAGE	1 GALLON	SEE DETAIL D, SHEET BC-GL-202
	SALVIA MELLIFERA	BLACK SAGE	1 GALLON	SEE DETAIL D, SHEET BC-GL-202

PLANTING NOTES

1. PLANT LOCATIONS SHOWN ON THE PLANS ARE DIAGRAMATIC. CONTRACTOR SHALL LOCATE ALL PLANT MATERIAL UNDER THE DIRECTION OF THE COUNTY ENGINEER OR AUTHORIZED REPRESENTATIVE PRIOR TO PLANTING HOLE EXCAVATION.
2. THE CITY ENGINEER OR AUTHORIZED REPRESENTATIVE RESERVES THE RIGHT TO MAKE SUBSTITUTIONS, ADDITIONS, AND DELETIONS TO THE PLANTING LAYOUT AS WORK PROGRESSES.
3. CONTRACTOR SHALL INSTALL A 3" LAYER OF 'STRINGY CEDAR BARK' MULCH IN ALL PLANTING AREAS.

LICENSED LANDSCAPE ARCHITECT
ANTHONY KEITH NO. 4823
10/31/04
STATE OF CALIFORNIA

REV	DATE	BY	DESCRIPTION

SCALE 1"=20'-0"

WARNING 0 1/2 1 IF THIS BAR DOES NOT MEASURE 1" THEN DRAWING IS NOT TO SCALE

DESIGNED TK/BMO
DRAWN B.OSBORN
CHECKED T.KEITH

SUBMITTED BY
C31069 LICENSE NO. 2/16/2004 DATE
C23892 LICENSE NO. 2/16/2004 DATE

DIGALERT DIAL TOLL FREE 1-800-642-2444 AT LEAST TWO DAYS BEFORE YOU DIG UNDERGROUND SERVICE ALERT OF NORTHERN CALIFORNIA

LOS OSOS COMMUNITY SERVICES DISTRICT

MWH Walnut Creek, California

RRM DESIGN GROUP

LOS OSOS WASTEWATER PROJECT
LANDSCAPING
BRODERSON EDS
PLANTING PLAN

SHEET C-L-206

N:\2002\1002008 Los Osos WWTP\Planning\product\Pump Stations\autocad\100%submittal\planting\1002008P_eds.dwg, C-L-206, Feb 06, 2004 5:15pm, BMOsborn

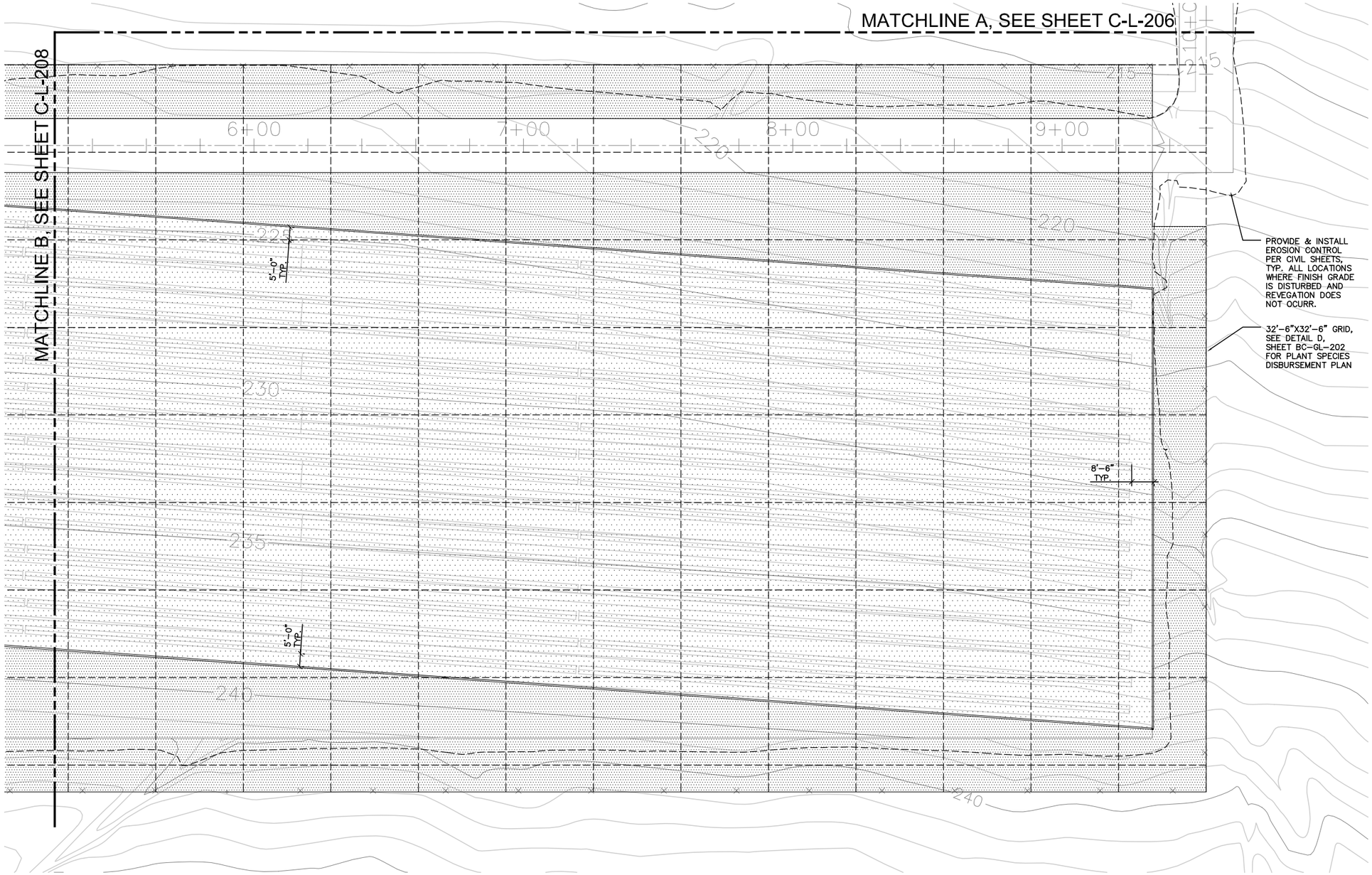

PLANT LEGEND*

SYMBOL	DESCRIPTION
	REVEGETATIVE PLANT MIX 'A'
	REVEGETATIVE PLANT MIX 'B'

*SEE SHEET C-L-206 FOR A MORE DETAILED PLANT LEGEND

north

BRODERSON EFFLUENT DISPOSAL SITE

SCALE: 1" = 20'

LICENSED LANDSCAPE ARCHITECT
ANTHONY KEITH NO. 4823
10/31/04
Date
STATE OF CALIFORNIA

REV	DATE	BY	DESCRIPTION

SCALE 1"=20'-0"

WARNING 0 1/2 1 — IF THIS BAR DOES NOT MEASURE 1" THEN DRAWING IS NOT TO SCALE

DESIGNED TK/BMO
DRAWN B.OSBORN
CHECKED T.KEITH

SUBMITTED BY
C31069 LICENSE NO. 2/16/2004 DATE
C23892 LICENSE NO. 2/16/2004 DATE

DIGALERT DIAL TOLL FREE 1-800-642-2444 AT LEAST TWO DAYS BEFORE YOU DIG UNDERGROUND SERVICE ALERT OF NORTHERN CALIFORNIA

LOS OSOS COMMUNITY SERVICES DISTRICT

MWH Walnut Creek, California

RRM DESIGN GROUP Creating Environments People Enjoy
3765 South Higuera Street, Suite 102 • San Luis Obispo, California 93401
Phone: 805/543-1794 • Fax: 805/543-0286 • rrmdesigngroup.com
An Employee Owned Co. 1981-Lic/Reg. AZ, CA, NV, OR, TX

LOS OSOS WASTEWATER PROJECT
LANDSCAPING
BRODERSON EDS
PLANTING PLAN

SHEET C-L-207

N:\2002\1002008 Los Osos WWTP\Planning\product\Pump Stations\autocad\1003Submittal\planting\1002008PP_eds.dwg, C-L-207, Feb 06, 2004 5:16pm, BMOsborn

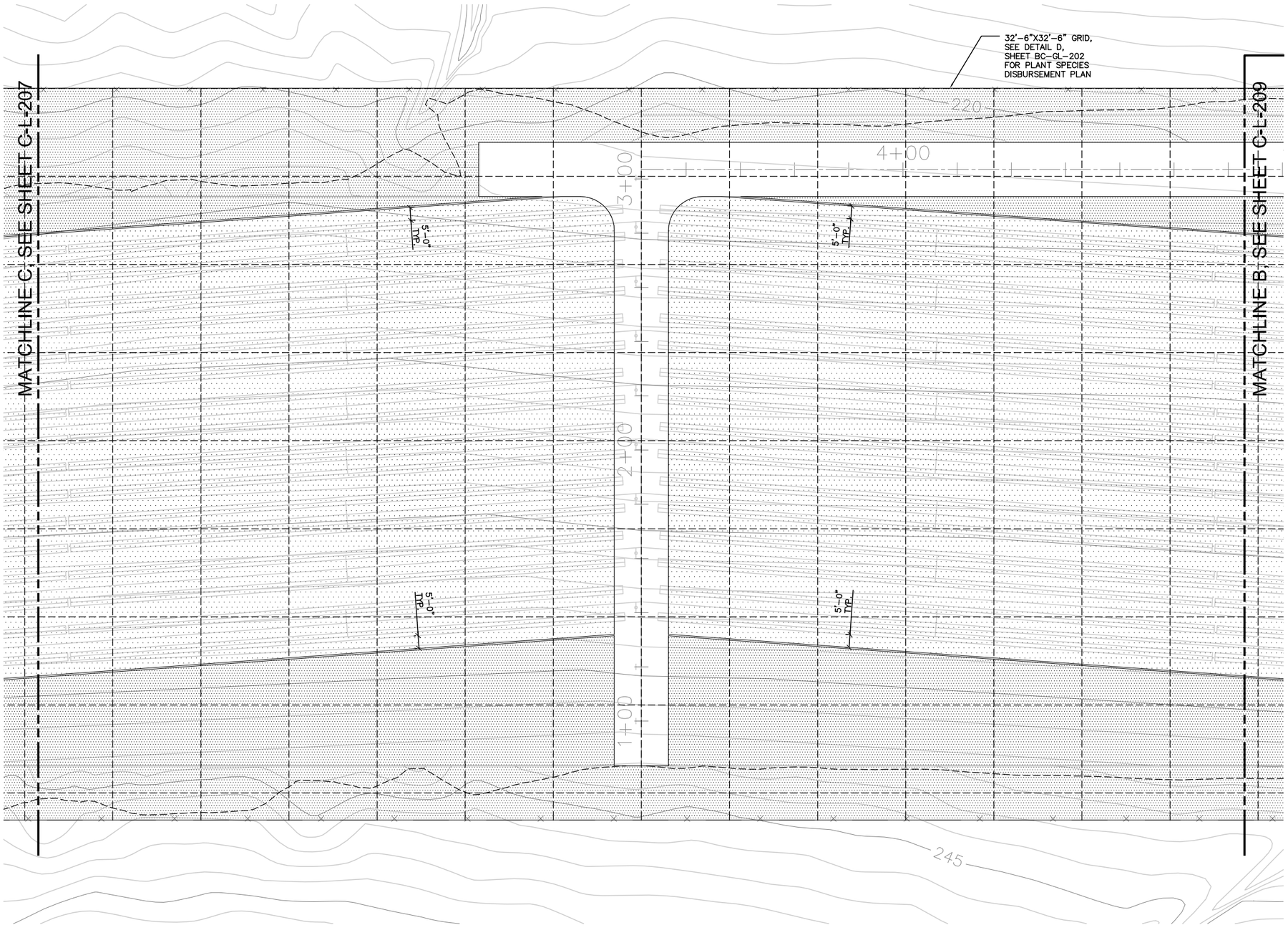

PLANT LEGEND*

SYMBOL	DESCRIPTION
	REVEGETATIVE PLANT MIX 'A'
	REVEGETATIVE PLANT MIX 'B'

*SEE SHEET C-L-206 FOR A MORE DETAILED PLANT LEGEND

BRODERSON EFFLUENT DISPOSAL SITE

SCALE: 1" = 20'

LICENSED LANDSCAPE ARCHITECT
ANTHONY KEITH NO. 3873
10/31/04
STATE OF CALIFORNIA

REV	DATE	BY	DESCRIPTION

SCALE 1"=20'-0"

WARNING 0 1/2 1 IF THIS BAR DOES NOT MEASURE 1" THEN DRAWING IS NOT TO SCALE

DESIGNED TK/BMO
DRAWN B.OSBORN
CHECKED T.KEITH

SUBMITTED BY
C31069 LICENSE NO. 2/16/2004 DATE
C23892 LICENSE NO. 2/16/2004 DATE

DIGALERT DIAL TOLL FREE 1-800-642-2444 AT LEAST TWO DAYS BEFORE YOU DIG
UNDERGROUND SERVICE ALERT OF NORTHERN CALIFORNIA

LOS OSOS COMMUNITY SERVICES DISTRICT

MWH Walnut Creek, California

RRM DESIGN GROUP Creating Environments People Enjoy

LOS OSOS WASTEWATER PROJECT LANDSCAPING
BRODERSON EDS PLANTING PLAN

SHEET C-L-208

N:\2002\1002008 Los Osos WWTF\Planning\product\Pump Stations\autocad\100%submittal\planting\1002008PP_eds.dwg, C-L-208, Feb 06, 2004 5:16pm, BMOsborn

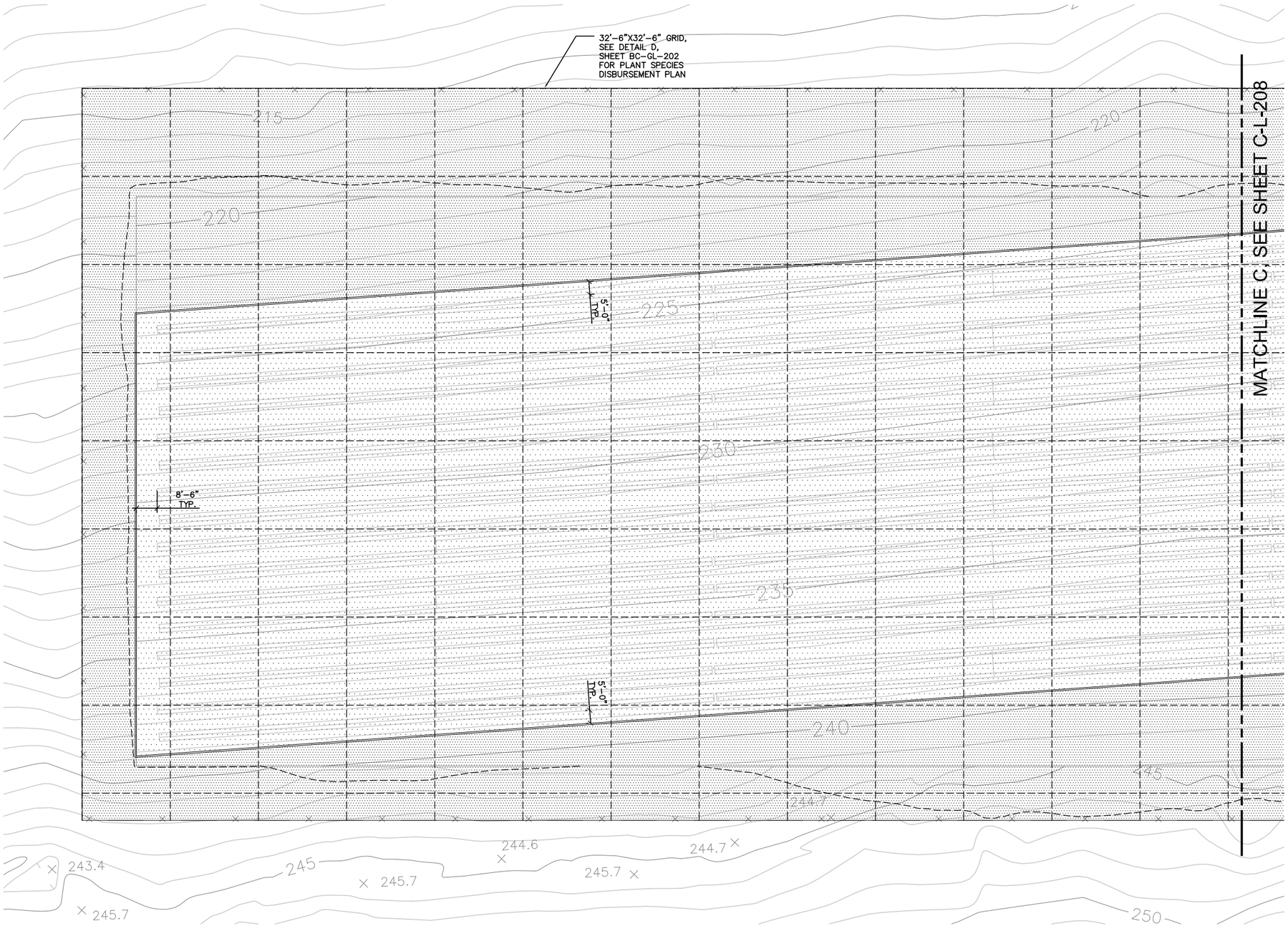

PLANT LEGEND*

SYMBOL	DESCRIPTION
	REVEGETATIVE PLANT MIX 'A'
	REVEGETATIVE PLANT MIX 'B'

*SEE SHEET C-L-206 FOR A MORE DETAILED PLANT LEGEND

BRODERSON EFFLUENT DISPOSAL SITE

north

SCALE: 1" = 20'

LICENSED LANDSCAPE ARCHITECT
ANTHONY KEITH NO. 3673
10/31/04
STATE OF CALIFORNIA

REV	DATE	BY	DESCRIPTION

SCALE 1"=20'-0"

WARNING 0 1/2 1 IF THIS BAR DOES NOT MEASURE 1" THEN DRAWING IS NOT TO SCALE

DESIGNED TK/BMO
DRAWN B.OSBORN
CHECKED T.KEITH

SUBMITTED BY
C31069 LICENSE NO. 2/16/2004 DATE
C23892 LICENSE NO. 2/16/2004 DATE

DIGALERT DIAL TOLL FREE 1-800-642-2444 AT LEAST TWO DAYS BEFORE YOU DIG
UNDERGROUND SERVICE ALERT OF NORTHERN CALIFORNIA

LOS OSOS COMMUNITY SERVICES DISTRICT

MWH Walnut Creek, California

RRM DESIGN GROUP

LOS OSOS WASTEWATER PROJECT LANDSCAPING
BRODERSON EDS PLANTING PLAN

SHEET C-L-209

N:\2002\1002008 Los Osos WWTF\Planning\product\Pump Stations\autocad\100%submittal\planting\1002008PP_eds.dwg, C-L-209, Feb 06, 2004 5:17pm, BMOsborn

GENERAL NOTES

GENERAL

THESE NOTES ARE GENERAL AND APPLY TO THE ENTIRE PROJECT EXCEPT WHERE SPECIFICALLY INDICATED OTHERWISE.

STRUCTURAL DIMENSIONS CONTROLLED BY OR RELATED TO MECHANICAL OR ELECTRICAL EQUIPMENT SHALL BE COORDINATED BY THE CONTRACTOR PRIOR TO CONSTRUCTION. BOLT SIZES, TYPES, AND PATTERNS SHALL BE VERIFIED WITH THE MANUFACTURER. ALL BOLT PATTERNS SHALL BE TEMPLATED TO INSURE ACCURACY OF PLACEMENT.

MECHANICAL AND ELECTRICAL EQUIPMENT SUPPORTS, ANCHORAGES, OPENINGS, RECESSES AND REVEALS NOT SHOWN ON THE STRUCTURAL DRAWINGS BUT REQUIRED BY OTHER CONTRACT DRAWINGS, SHALL BE PROVIDED FOR PRIOR TO PLACING CONCRETE.

STRUCTURAL DRAWINGS SHALL BE USED IN COORDINATION WITH MECHANICAL, ELECTRICAL, ARCHITECTURAL, CIVIL DRAWINGS AND SHOP DRAWINGS PROVIDED BY MANUFACTURES OF EQUIPMENT.

STRUCTURES HAVE BEEN DESIGNED FOR OPERATIONAL LOADS ON THE COMPLETED STRUCTURES. DURING CONSTRUCTION, THE STRUCTURES SHALL BE PROTECTED BY BRACING AND BALANCING WHEREVER EXCESSIVE CONSTRUCTION LOADS MAY OCCUR. OVERSTRESSING OF ANY STRUCTURAL ELEMENT IS PROHIBITED.

UNLESS OTHERWISE SHOWN, ON ALL STRUCTURAL DRAWINGS THE FINISH GRADE AROUND STRUCTURES IS SHOWN THUS, INDICATING EITHER GROUND SURFACE, TOP OF CONCRETE SLAB OR AC PAVEMENT. FOR DETAILS OF FINISH SURFACES SEE CIVIL AND ARCHITECTURAL DRAWINGS.

STRUCTURAL

DESIGN IN ACCORDANCE WITH THE 2001 EDITION OF THE UNIFORM BUILDING CODE, EXCEPT WHERE OTHER APPLICABLE CODES OR THE FOLLOWING NOTES ARE MORE RESTRICTIVE.

LOADINGS:

FOUNDATION --- 2000+1/3rd INCREASE FOR WIND AND SEISMIC
ROOF ---------- 35 PSF
WIND ---------- 80 MPH, EXPC
SEISMIC ------- ZONE= 4, Na= 1.3, Nv= 1.6, Ca= 0.44Na, Cv= 0.64Nv, SOILTYPE= Sd

LOCATION OF ALL CONSTRUCTION JOINTS SHALL BE AS SHOWN ON THE DRAWINGS OR APPROVED BY THE ENGINEER. ALL CONSTRUCTION JOINTS LOCATED ON THE DRAWINGS OR REQUIRED FOR CONSTRUCTION, BUT NOT SHOWN ON THE DRAWINGS, SHALL HAVE A 6" FLATSTRIP WATERSTOP, IF IN MEMBERS IN CONTACT WITH WATER. IN ADDITION, JOINTS IN ALL SLABS COVERED WITH WATER, SHALL HAVE BOTH A 6" FLATSTRIP WATERSTOP AND A SEALANT GROOVE.

STRUCTURAL STEEL

STEEL CONSTRUCTION SHALL CONFORM TO THE SPECIFICATIONS AND STANDARDS AS CONTAINED IN THE LATEST EDITION OF THE AISC STEEL CONSTRUCTION MANUAL.

ALL STRUCTURAL SHAPES, BARS, PLATES AND SHEETS SHALL BE OF STEEL MEETING ASTM A-36 SPECIFICATIONS.

ALL WELDING SHALL BE BY THE SHIELDED ARC METHOD AND SHALL CONFORM TO AWS CODE FOR ARC AND GAS WELDING IN BUILDING CONSTRUCTION. QUALIFICATIONS OF WELDERS SHALL BE IN ACCORDANCE WITH THE SPECIFICATIONS FOR STANDARD QUALIFICATION PROCEDURE OF THE AWS.

CONCRETE (EXCEPT PRECAST CONCRETE)

UNLESS OTHERWISE NOTED OR SPECIFIED, ALL STRUCTURAL CONCRETE SHALL DEVELOP A MINIMUM COMPRESSIVE STRENGTH OF 4000 PSI IN 28 DAYS.

REINFORCEMENT STEEL SHALL BE DEFORMED BARS CONFORMING IN QUALITY TO THE REQUIREMENTS OF ASTM A-615, "SPECIFICATIONS FOR DEFORMED BILLET-STEEL BARS FOR CONCRETE REINFORCEMENT", GRADE 60

COLUMN SPIRALS SHALL CONFORM TO ASTM A-82, "SPECIFICATION FOR COLD-DRAWN STEEL WIRE FOR CONCRETE REINFORCEMENT".

ALL DETAILING, FABRICATION AND PLACING OF REINFORCING BARS, UNLESS OTHERWISE INDICATED, SHALL BE IN ACCORDANCE WITH ACI-315, "MANUAL OF STANDARD PRACTICE FOR DETAILING REINFORCED CONCRETE STRUCTURES", LATEST EDITION.

TOLERANCES IN PLACING REINFORCEMENT SHALL BE:

± 3/8 INCH FOR MEMBERS WITH D <= 8 INCHES
± 1/2 INCH FOR MEMBERS WITH D > 8 INCHES

ALL CONSTRUCTION JOINTS, SHALL BE ROUGH AND THOROUGHLY CLEANED FOR BOND.

DOWELS, PIPE, WATERSTOPS AND OTHER INSTALLED MATERIALS AND ACCESSORIES SHALL BE HELD SECURELY IN POSITION WHILE CONCRETE IS BEING PLACED.

UNLESS OTHERWISE INDICATED, ASIDE FROM NORMAL ACCESSORIES USED TO HOLD REINFORCING BARS FIRMLY IN POSITION, THE FOLLOWING SHALL BE ADDED:

A) IN SLABS #5 RISER BARS AT 36 INCHES OC MAXIMUM TO SUPPORT TOP REINFORCING BARS.

B) IN WALLS WITH 2 CURTAINS #3 U OR Z SHAPE SPACERS AT 6 FEET OC EACH WAY.

VERTICAL REINFORCEMENT FOR CONCRETE OR MASONRY SHALL BE SPLICED WITH DOWEL BARS OF THE SAME SIZE AND SPACING FROM THE FOUNDATION USING A STANDARD SPLICE LENGTH UNLESS INDICATED OTHERWISE.

SEALANT SHALL BE PLACED AT THE TOP OF ALL JOINTS RECEIVING EXPANSION JOINT FILLER. SEALANT DEPTH SHALL BE THE JOINT FILL THICKNESS OR 5/64", WHICHEVER IS LESS.

ALL GROUT SHALL BE NON-SHRINK GROUT, UNLESS INDICATED OTHERWISE.

METAL CLIPS OR SUPPORTS SHALL NOT BE PLACED IN CONTACT WITH THE FORMS OR THE SUBGRADE. CONCRETE BLOCKS (OR DOBIES) SUPPORTING BARS ON SUBGRADE SHALL BE IN SUFFICIENT NUMBERS TO SUPPORT THE BARS WITHOUT SETTLEMENT, BUT IN NO CASE SHALL SUCH SUPPORT BE CONTINUOUS.

DOWELS SHALL BE WIRED OR OTHERWISE HELD IN POSITION. THEY SHALL NOT BE SHOVED INTO FRESHLY PLACED CONCRETE.

UNLESS OTHERWISE INDICATED ON THE DRAWINGS, LAPS OF REINFORCEMENT SHALL BE AS SHOWN ON DETAIL S-143.

LOCATE TWO 3/4 INCH GALVANIZED RICHMOND ROCKET INSERTS, HOHMANN & BARNARD OR EQUAL, STRADDLING CENTERLINE OF EQUIPMENT OVER ALL PUMPS, METERS OR OTHER MECHANICAL UNITS OF MORE THAN 100 LBS, FOR INSERTING LIFTING EYES IF NOT OTHERWISE INDICATED.

REINFORCING BARS AND ACCESSORIES SHALL NOT BE IN CONTACT WITH AND PIPE, PIPE FLANGE OR METAL PARTS EMBEDDED IN CONCRETE, A MINIMUM OF 2 INCHES CLEARANCE SHALL BE PROVIDED AT ALL TIMES.

ALL ITEMS EMBEDDED IN CONCRETE SHALL BE SPACED ON CENTER AT LEAST 4 TIMES THEIR OUTSIDE DIMENSION. THE OUTSIDE DIMENSION SHALL NOT EXCEED ONE THIRD OF THE MEMBER THICKNESS

UNLESS OTHERWISE SHOWN ON THE DRAWINGS CONCRETE COVER FOR REINFORCING BARS SHALL BE AS FOLLOWS:

FOR CONCRETE PLACED AGAINST EARTH ---------- 3"

FOR SURFACES IN CONTACT WITH WATER OR WEATHER AND FORMED SURFACES IN CONTACT WITH EARTH -------- 2"

FOR CONCRETE NOT EXPOSED TO WEATHER, OR IN CONTACT WITH WATER OR EARTH ---------- 1 1/2"

UNLESS OTHERWISE NOTED, WALLS AND SLABS SHOWN WITH A SINGLE LAYER OF REINFORCEMENT SHALL HAVE THAT REINFORCEMENT CENTERED

SLABS WITH SLOPING SURFACES SHALL HAVE THE INDICATED SLAB THICKNESS MAINTAINED AS THE MINIMUM. SLAB BOTTOMS MAY EITHER SLOPE WITH THE TOP SURFACE OR BE LEVEL. REINFORCING IN SLABS WITH SLOPING SURFACES SHALL BE PLACED AT THE REQUIRED CLEARANCE FROM THE SLAB SURFACES.

TESTING HYDRAULIC STRUCTURES

WHEN FILLING THE STRUCTURES WITH WATER FOR THE TEST REQUIRED IN THE SPECIFICATIONS, ALL VARIOUS BASINS LOCATED IN THE SAME STRUCTURE SHALL BE FILLED SIMULTANEOUSLY AT THE SAME RATE IN ORDER TO KEEP THE SAME LEVEL IN EACH BASIN.

STRUCTURAL STANDARD DETAILS

DETAILS ON SHEETS NUMBERED GS-# ARE PART OF MONTGOMERY WATSON'S STRUCTURAL STANDARD DETAILS.

THESE DETAILS ARE TO BE USED WHEN REFERRED TO OR WHEN NO OTHER MORE RESTRICTIVE OR DIFFERENT DETAILS ARE SHOWN ON THE DRAWINGS.

DETAILS NOT PERTAINING TO THE PROJECT ARE MARKED THUS

STRUCTURAL STANDARD DETAIL CALLOUT

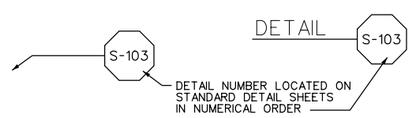

SECTION CALLOUT

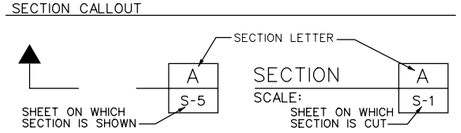

DETAIL CALLOUT

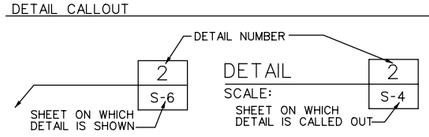

MASONRY

CONCRETE BLOCK MASONRY SHALL BE MEDIUM, HOLLOW UNITS CONFORMING TO ASTM C 90, TYPE 1 SIZE OF UNITS, COLOR AND TEXTURE SHALL BE PER THE SPECIFICATIONS.

GROUT ALL CELLS OF CONCRETE BLOCK MASONRY UNLESS OTHERWISE NOTED ON DRAWINGS.

BAR LAPS SHALL BE 48 BAR DIAMETERS UNLESS OTHERWISE NOTED.

MORTAR SHALL BE IN ACCORDANCE WITH TABLE 21-A OF UBC TYPE S, AND SHALL HAVE A MINIMUM COMPRESSIVE STRENGTH AT 28 DAYS OF 1800 PSI.

GROUT SHALL BE IN ACCORDANCE WITH PARAGRAPH 2103(S) OF THE UBC AND SHALL HAVE A MINIMUM COMPRESSIVE STRENGTH OF 2000 PSI.

UNLESS OTHERWISE SPECIFIED, SPECIAL INSPECTION SHALL BE PROVIDED FOR ALL MASONRY WORK.

THE COMBINED MASONRY ASSEMBLAGE COMPRESSIVE STRENGTH AT 28 DAYS SHALL BE A MINIMUM OF f'm = 1500 PSI.

REINFORCEMENT SHALL BE TIED OR OTHERWISE SECURED IN POSITION PRIOR TO GROUTING.

ALL HORIZONTAL AND VERTICAL REINFORCEMENT SHALL BE CONTINUOUS OVER THE FULL EXTENT OF THE WALL WITH STANDARD SPLICES LOCATED AS NEEDED. WHERE IT IS NECESSARY TO INTERRUPT AN INDIVIDUAL BAR, AN EQUAL SIZED BAR SHALL BE LOCATED AS CLOSE AS POSSIBLE AND SHALL EXTEND A MINIMUM OF ONE SPLICE LENGTH BEYOND EACH SIDE OF THE INTERRUPTION.

ROOFS

THE CONTRACTOR SHALL COORDINATE THE LOCATION AND SIZES OF ROOF OPENINGS WITH THE MECHANICAL, HVAC AND ARCHITECTURAL DRAWINGS. STANDARD DETAIL S-606 AND S-607 SHALL BE USED AT ALL OPENINGS. ROOF BEAMS AND GIRDERS SHALL NOT BE RELOCATED WITHOUT APPROVAL BY THE ENGINEER.

UNLESS INDICATED OTHERWISE, SEE THE DRAWINGS FOR THE NAILING REQUIREMENTS FOR PLYWOOD DECKING.

SPECIAL INSPECTION

THE FOLLOWING REQUIRE SPECIAL INSPECTION:

CONCRETE AND REINFORCING PLACEMENT
SHOP WELDING (IF NOT DONE IN A UBC 306f APPROVED SHOP)
FIELD WELDING
WELDING OF REBAR SPLICES
WELDING OF METAL DECK
WELDING OF METAL STUD AND JOIST FRAMING
HIGH STRENGTH BOLTED CONNECTIONS
MASONRY CONSTRUCTION
INSTALLATION OF ADHESIVE ANCHORS

PRECAST CONCRETE

THE SUPPLIER OF THE PRECAST SHALL DESIGN AND PROVIDE DRAWINGS AND CALCULATIONS STAMPED BY A PROFESSIONAL ENGINEER REGISTERED IN THE STATE OF CALIFORNIA AND SUBMITTED TO THE ENGINEER FOR REVIEW. THE DESIGN SHALL BE PER THE SPECIFICATIONS

THE SUPPLIER SHALL COORDINATE WITH THE CONTRACTOR FOR THE SIZE AND LOCATION OF ALL ROOF PENETRATIONS PRIOR TO FABRICATION.

SUGGESTED CAISSON CONSTRUCTION SEQUENCE

1. PLACE THE PRECAST CONCRETE CAISSON.
2. EXCAVATE THE IN-SITU SOILS FROM THE CENTER OF LIFT STATION IN A CAREFUL CONTROLLED MANNER TO ALLOW UNIFORM VERTICAL DISPLACEMENT OF THE NEW LIFT STATION TO THE DESIRED ELEVATION.
3. CLEANOUT THE KEYS AND BASE OF THE EXCAVATION AND PLACE THE SEAL SLAB REINFORCING STEEL IN THE EXCAVATION.
4. TREMIE PUMP THE 4000 PSI SEAL SLAB MIX CONCRETE INTO PLACE.
5. MAINTAIN THE FULL WET CONDITION WITHIN THE LIFT STATION UNTIL THE SEAL SLAB ACHIEVES 4000 PSI.
6. UPON ACHIEVING 4000 PSI CYLINDER BREAK RESULTS FOR THE SEAL SLAB PUMP OUT WATER FROM THE LIFT STATION. CLEAN OUT KEYS AND THREADED INSERTS AND PLACE BOTTOM SLAB REINFORCING STEEL AND CONCRETE.
7. CLEAN OUT KEYS AND THREADED INSERTS AND PLACE BOTTOM SLAB REINFORCING STEEL AND CONCRETE.
8. INSTALL TOP AND ROOF REINFORCING STEEL AND CAST-IN-PLACE CONCRETE.
9. COMPLETE CONSTRUCTION.

REGISTERED PROFESSIONAL ENGINEER JOHN W. BERGEN No. S-3195 Exp. 12-31-05 STRUCTURAL STATE OF CALIFORNIA

REV	DATE	BY	DESCRIPTION

SCALE

WARNING
0 1/2 1
IF THIS BAR DOES NOT MEASURE 1" THEN DRAWING IS NOT TO SCALE

DESIGNED MWH
DRAWN MWH
CHECKED C.WILCOX

SUBMITTED BY
JOHN A. BERGEN — C31069 LICENSE NO. — 2/16/2004 DATE
STEVE J. HYLAND — C23892 LICENSE NO. — 2/16/2004 DATE

DIGALERT DIAL TOLL FREE 1-800-642-2444 AT LEAST TWO DAYS BEFORE YOU DIG UNDERGROUND SERVICE ALERT OF NORTHERN CALIFORNIA

LOS OSOS COMMUNITY SERVICES DISTRICT

MWH Walnut Creek, California

LOS OSOS WASTEWATER PROJECT
STRUCTURAL GENERAL NOTES

SHEET BC-GS-200

Job No: 1481166 File: N:\Projects\los_osos\Collect_Sys\PS\str\BC-GS-200.dgn Plot Date: 09-FEB-2004 15:25

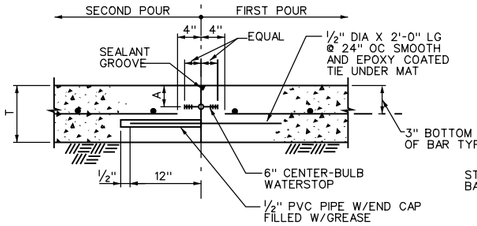

SINGLE MAT REINF - SLEEVE - TYPE JOINT

(TYP CONSTRUCTION JOINT UNLESS OTHERWISE NOTED)

WITH WATERSTOP AND SEALANT GROOVE — S-110

NO WATERSTOP OR SEALANT GROOVE — S-111

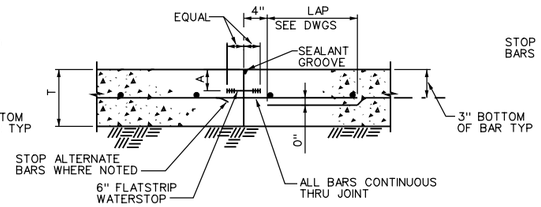

SINGLE MAT REINF - CONTINUOUS THRU JOINT

(ONLY WHEN SPECIFIED ON DRAWINGS)

WITH WATERSTOP AND SEALANT GROOVE — S-112

NO WATERSTOP OR SEALANT GROOVE — S-113

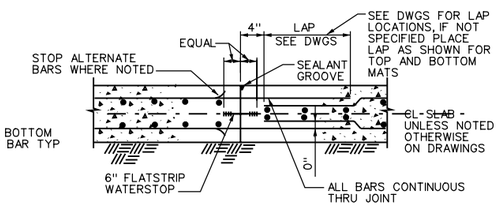

DOUBLE MAT REINF

WITH WATERSTOP AND SEALANT GROOVE — S-114

NO WATERSTOP OR SEALANT GROOVE — S-115

T	A
6"	2"
7"	2½"
8"	2½"

NOTES:

1. IN ALL CONSTRUCTION JOINTS WITH WATERSTOPS, APPLY 2 COATS OF BOND BREAKER TO FACE OF JOINT, AVOID COATING WATERSTOP (AND SEALANT GROOVE WHERE USED).
2. WATERSTOPS AND SEALANT GROOVES TO BE PROVIDED IN ALL WATER RETAINING SLABS, SEE DRAWINGS, FOR OTHER LOCATIONS WHERE THEY MAY BE REQUIRED.
3. STAGGER SPLICES UNLESS NOTED OTHERWISE.

SLAB-ON-GRADE CONSTRUCTION JOINTS — REV 080999

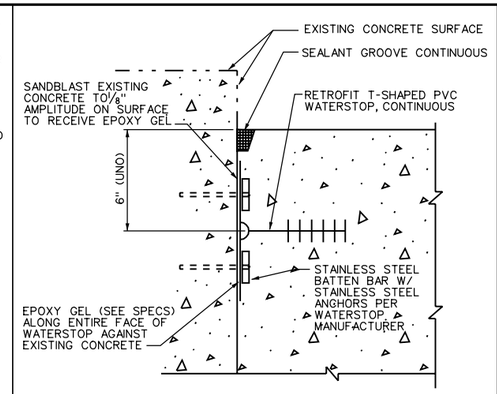

WATERSTOP AT EXISTING SURFACE — REV 120699 — S-130

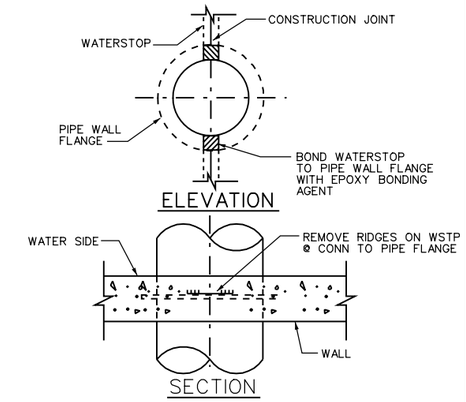

CONSTRUCTION JOINT DETAILS AT PIPE OPENINGS — REV 042399 — S-133

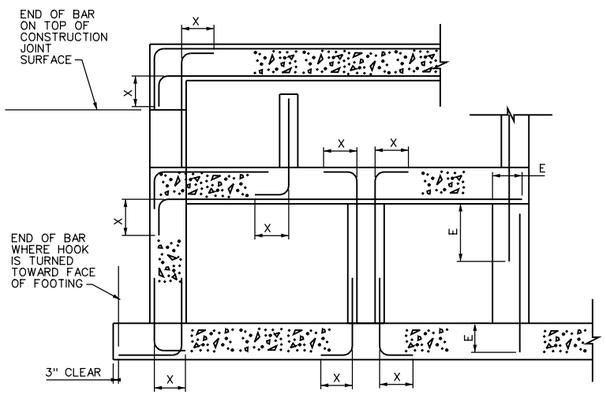

SECTION

LENGTH (INCHES)			
BAR SIZE	HOOK X	LAP	EMBEDMENT E
#3	6"	18"	12"
#4	8"	18"	14"
#5	10"	23"	18"
#6	12"	28"	22"
#7	14"	33"	25"
#8	16"	SEE TABLE BELOW	SEE TABLE BELOW
#9	19"		
#10	22"		
#11	24"		

LENGTH (INCHES)						
REBAR SIZE	FOR 1" TO < 2" CONCRETE COVER		FOR 2" TO < 3" CONCRETE COVER		FOR 3" AND LARGER CONCRETE COVER	
	REBAR SPACING (CENTER TO CENTER)		REBAR SPACING (CENTER TO CENTER)		REBAR SPACING (CENTER TO CENTER)	
	< 8"	≥ 8"	< 8"	≥ 8"	< 8"	≥ 8"
LAP						
#8	62"	62"	37"	37"	37"	37"
#9	99"	79"	69"	55"	49"	42"
#10	125"	100"	88"	70"	63"	50"
#11	154"	123"	108"	86"	77"	62"
EMBEDMENT E						
#8	48"	48"	29"	29"	29"	29"
#9	77"	61"	54"	43"	38"	33"
#10	97"	77"	68"	54"	49"	39"
#11	119"	95"	84"	67"	60"	48"

NOTES:

1. USE LAP LENGTHS AS DETERMINED FROM THESE TABLES UNLESS SHOWN OTHERWISE
2. THE TABLES SHOWN ARE FOR f'c=4000psi AND fy=60,000psi
3. MULTIPLY THE LAP AND E SHOWN IN THESE TABLES BY 1.3 FOR WALL HORIZONTAL REBARS AND SLAB BARS WITH 12" OR MORE FRESH CONCRETE UNDERNEATH
4. MULTIPLY THE LAP AND E SHOWN IN THESE TABLES BY 1.5 FOR EPOXY COATED REINFORCING
5. MULTIPLY THE LAP AND E SHOWN IN THESE TABLES BY 1.7 FOR EPOXY COATED REBARS THAT ARE WALL HORIZONTALS OR SLAB BARS WITH 12" OR MORE FRESH CONCRETE UNDERNEATH
6. WHEN BARS OF DIFFERENT SIZES ARE LAP SPLICED, LAP LENGTH SHALL BE THE LARGER OF:

   EMBEDMENT LENGTH OF LARGER BAR
   LAP LENGTH OF SMALLER BAR
7. UNLESS NOTED OTHERWISE USE REBAR COUPLERS FOR SPLICES OF #11 AND LARGER BARS
8. ALL DOWEL BARS SHALL EXTEND AN EMBEDMENT LENGTH E INTO ANOTHER MEMBER OR ACROSS A CONSTRUCTION JOINT UNLESS SHOWN TO SPLICE WITH OTHER BARS OR TO EXTEND TO THE FAR FACE OF THE MEMBER AND END WITH A STANDARD HOOK

STANDARD 90° BAR HOOKS, EMBEDMENT LENGTHS AND LAP LENGTHS UNLESS OTHERWISE NOTED ON DRAWINGS — REV 082699 — S-143

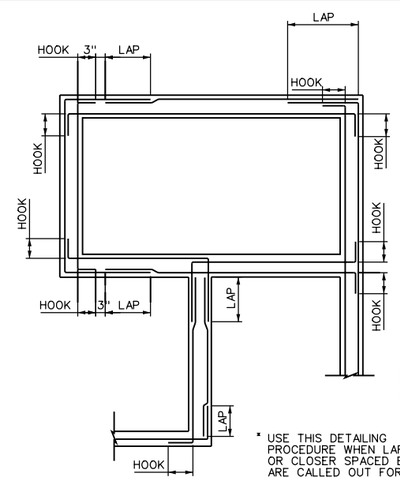

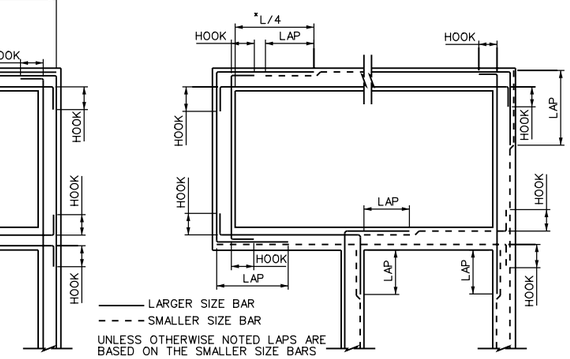

LARGER SIZE BAR
SMALLER SIZE BAR

UNLESS OTHERWISE NOTED LAPS ARE BASED ON THE SMALLER SIZE BARS

L = CLEAR SPAN

* USE THIS DETAILING PROCEDURE WHEN LARGER OR CLOSER SPACED BARS ARE CALLED OUT FOR CORNERS

HORIZONTAL REINFORCEMENT AT WALL INTERSECTIONS — REV 051899 — S-141

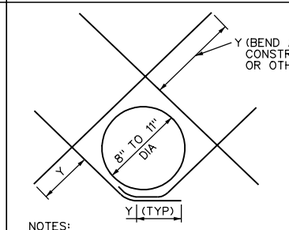

BAR SIZE	Y GRADE 60
#4	15"
#5	21"
#6	24"
#7	27"
#8	36"
#9	42"

NOTES:

1. CUT NORMAL REINFORCEMENT 2" CLEAR OF OPENING
2. DIAGONAL BARS TO BE PLACED:
   A) AT CENTERLINE OF WALL OR SLAB WHERE ONE LAYER OF REINFORCEMENT IS PROVIDED
   B) AT EACH FACE OF WALL OR SLAB WHERE TWO LAYERS OF REINFORCEMENT ARE PROVIDED
3. UNLESS OTHERWISE NOTED, SIZE OF DIAGONAL BARS SHALL BE THE SIZE OF THE LARGEST NORMAL REINFORCING BAR CUT
4. THIS DETAIL TO BE USED ONLY WHEN CALLED FOR ON THE DRAWINGS OR WHEN NO OTHER DETAIL IS SPECIFIED

DIAGONAL REINFORCEMENT AT CIRCULAR OPENINGS (8" - 11" DIA) — REV 080599 — S-142

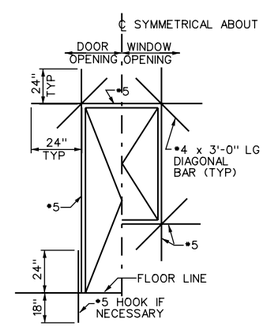

ELEVATION

NOTES:

1. CUT NORMAL REINFORCING AT OPENING
2. FOR WALLS WITH TWO LAYERS OF REINFORCING PROVIDE 1 BAR EACH FACE
3. FOR WALLS WITH ONE LAYER OF REINFORCING PROVIDE 1 BAR ON WALL CENTERLINE
4. BAR LENGTHS FOR GRADE 60

TYPICAL REINFORCEMENT AROUND RECTANGULAR WALL OPENING — REV 081899 — S-147

REGISTERED PROFESSIONAL ENGINEER — CRAIG JOHN WILSON — No. S-3193 — Exp. 12-31-05 — STRUCTURAL — STATE OF CALIFORNIA

REV	DATE	BY	DESCRIPTION

SCALE

WARNING: 0 1/2 1 — IF THIS BAR DOES NOT MEASURE 1" THEN DRAWING IS NOT TO SCALE

DESIGNED MWH
DRAWN MWH
CHECKED C.WILCOX

SUBMITTED BY
JOHN A. BERGEN — C31069 LICENSE NO. — 2/16/2004 DATE
STEVE J. HYLAND — C23892 LICENSE NO. — 2/16/2004 DATE

DIGALERT — DIAL TOLL FREE 1-800-642-2444 — AT LEAST TWO DAYS BEFORE YOU DIG — UNDERGROUND SERVICE ALERT OF NORTHERN CALIFORNIA

LOS OSOS COMMUNITY SERVICES DISTRICT

MWH Walnut Creek, California

LOS OSOS WASTEWATER PROJECT

STRUCTURAL STANDARD STRUCTURAL DETAILS-1

SHEET BC-GS-201

Plot Date: 09-FEB-2004 15:33
File: N:\Projects\los_osos\Collect_Sys\PS\str\BC-GS-201.dgn
Job No: 1481166

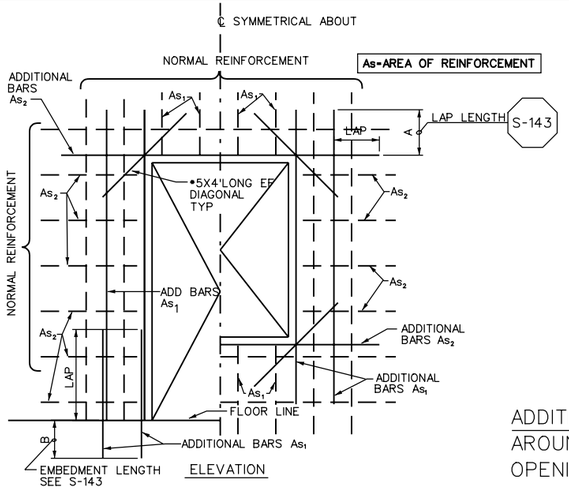

NOTES:

1. CUT NORMAL REINFORCEMENT AT OPENING:

   As_1 AND As_2 = ½ AREA OF CUT BARS TO BE ADDED ON EACH SIDE OF OPENING @ EA FACE 2-•5 MIN.
2. ADDITIONAL BARS As_1 AND As_2 TO BE PLACED:

   A) AT CENTERLINE OF WALLS OR SLABS WHERE ONE LAYER OF REINFORCEMENT IS PROVIDED

   B) AT EACH FACE OF WALLS OR SLABS WHERE TWO LAYERS OF REINFORCEMENT ARE PROVIDED
3. INCREASE SIZE OF ADDITIONAL BARS AS NEEDED TO FIT WITHIN A DISTANCE OF 2 X WALL/SLAB THICKNESS FROM OPENING. PROVIDE 2" MIN CLEAR BETWEEN BARS
4. THIS DETAIL TO BE USED ONLY WHEN NO OTHER DETAIL IS INDICATED ON THE DRAWINGS
5. WHERE A SLAB OR INTERSECTING WALL CONNECTS WITHIN ONE WALL THICKNESS OF THE OPENINGS, ADDITIONAL BARS ON THAT SIDE MAY BE OMITTED

ADDITIONAL REINFORCEMENT AROUND RECTANGULAR OPENINGS

REV 080599 — S-148

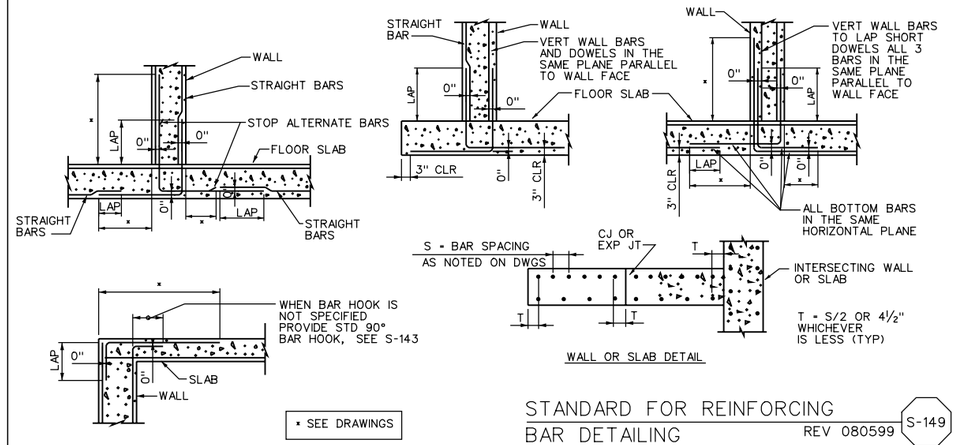

STANDARD FOR REINFORCING BAR DETAILING

REV 080599 — S-149

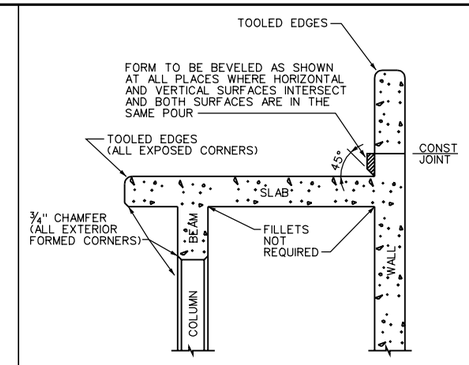

FORMING DETAILS

REV 052499 — S-152

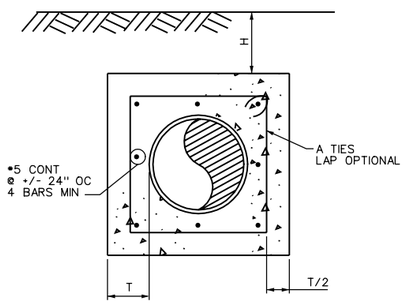

T= 6" OR 8" ENCASEMENT

COVER H	PIPE DIAMETER 8" - 32" A	8" - 32" T	36" A	36" T	42" - 48" A	42" - 48" T	54" - 60" A	54" - 60" T	66"-72" A	66"-72" T
2'	•4@12"	6"	•4@9"	6"	•4@9"	8"	•5@10"	8"	•4@9"	12"
3'			•4@12"		•4@12"		•4@9"		•5@10"	8"
4'									•5@12"	
5'									•5@12"	
6'									•5@12"	
7'									•5@10"	
8'									•5@10"	
9'							•4@9"		•5@10"	
10'							•5@12"		•6@12"	
12'							•5@10"		•6@12"	
14'					•4@12"		•5@10"		•6@10"	8"
16'					•4@9"		•5@10"		•4@9"	12"
18'					•4@9"		•6@12"	8"	•5@12"	12"
20'	•4@12"	6"	•4@12"	6"	•4@9"	8"	•4@9"	12"	•5@12"	12"

NOTES:

1. PIPE ENCASEMENT DESIGNED FOR TRENCH CONDITION
2. WHERE ENCASEMENT PASSES UNDER SPREAD FOOTING OR MAT FOUNDATION, USE H=20' UNO
3. ALL ENCASEMENTS UNDER STRUCTURES SHALL BE SEPARATED FROM THE STRUCTURE FOUNDATIONS BY BACKFILL OR 2 LAYERS OF 40• FELT UNO
4. WHEN ENCASEMENTS TERMINATE @ STRUCTURE, ENCASEMENT REINFORCING SHALL BE DOWELED INTO THE STRUCTURE

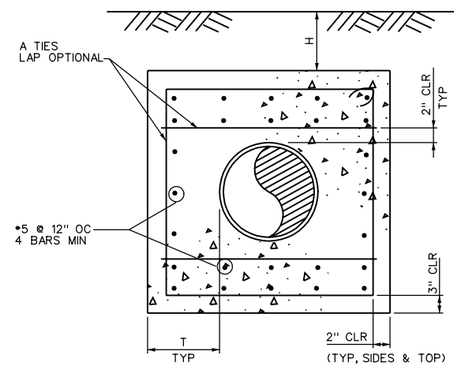

T= 12" ENCASEMENT

ENCASEMENT DETAIL

TRENCH CONDITION

REV 083099 — S-172

ANCHOR BOLT DIAMETER (inches)	MINIMUM EMBEDMENT TOP OF COLUMNS	MINIMUM EMBEDMENT OTHER APPLICATIONS
¼	5	3
⅜	5	3
½	6	4
⅝	6	4.5
¾	7	5
⅞	8	6
1	9	7
1⅛	10	8
1¼	11	9

NOTES

1. USE ONLY HEADED ANCHORS, J-BOLTS ARE NOT ALLOWED
2. THIS DETAIL APPLIES TO BOTH CONCRETE AND MASONRY
3. IN MASONRY PROVIDE A 1" ANNULAR SPACE IN BLOCK SHELL AROUND ANCHOR. GROUT TO SURFACE
4. FOR ADHESIVE ANCHORS USE THE TOP OF COLUMN EMBEDMENTS UNLESS THE MANUFACTURER'S LITERATURE CALLS OUT LONGER LENGTHS

TYPICAL ANCHOR BOLT EMBEDMENT

REV 083099 — S-175

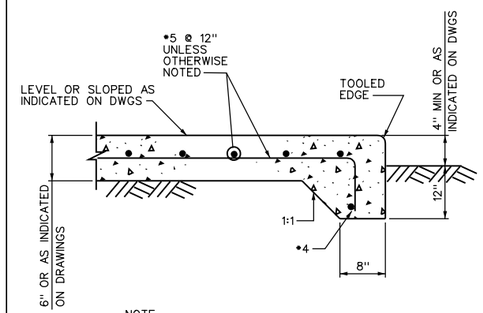

NOTE

USE 2 MATS OF •5 @ 12" EW EF FOR SLABS 10" AND THICKER

SLAB ON GRADE

REV 081899 — S-190

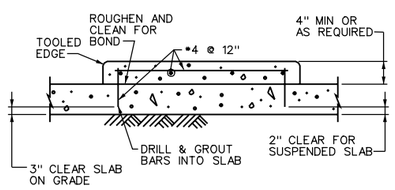

HOUSEKEEPING PAD

REV 080699 — S-191

NOTE:

WHERE NO DIMENSION IS INDICATED ON THE DRAWINGS, BASE DEPTH SHALL BE SET SO THAT THE BASE WEIGHS AT LEAST TWICE THE WEIGHT OF THE EQUIPMENT SUPPORTED

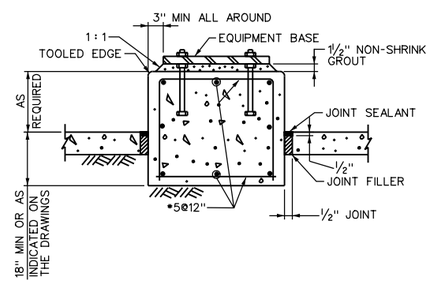

EQUIPMENT BASE ON GRADE WITH SEPARATING JOINT

REV 080999 — S-193

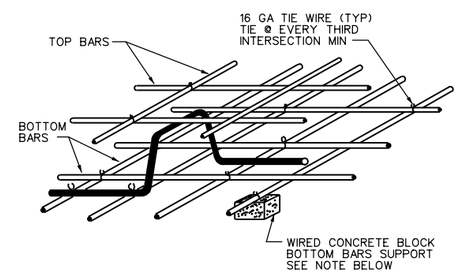

NOTE:
METAL BAR SUPPORTS, IF USED IN SLABS NOT ON GROUND, SHALL NOT MAKE CONTACT WITH FORMS

REINFORCEMENT SUPPORT

REV 060199 — S-204

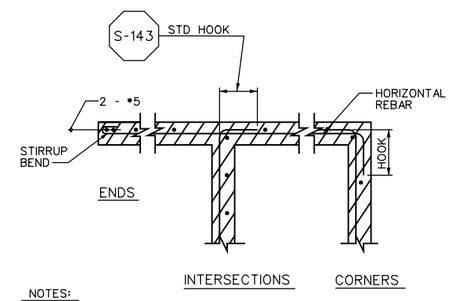

NOTES:

1. DEEP CUT BOND BEAM BLOCKS SHALL BE USED WHERE HORIZONTAL REINFORCING STEEL IS EMBEDDED, AND ABOVE ALL OPENINGS.
2. H-BLOCK BOND BEAMS MAY BE USED AT LOCATIONS OTHER THAN OPENINGS.

TYPICAL 8" & 10" BLOCK WALL SECTIONS

REV 092299 — S-401

REGISTERED PROFESSIONAL ENGINEER CRAIG JOHN WILCOX No. S-3165 Exp. 12-31-05 STRUCTURAL STATE OF CALIFORNIA

REV	DATE	BY	DESCRIPTION

SCALE

WARNING 0 1/2 1 — IF THIS BAR DOES NOT MEASURE 1" THEN DRAWING IS NOT TO SCALE

DESIGNED MWH
DRAWN MWH
CHECKED C.WILCOX

SUBMITTED BY
JOHN A. BERGEN — C31069 LICENSE NO. — 2/16/2004 DATE
STEVE J. HYLAND — C23892 LICENSE NO. — 2/16/2004 DATE

DIGALERT — DIAL TOLL FREE 1-800-642-2444 AT LEAST TWO DAYS BEFORE YOU DIG — UNDERGROUND SERVICE ALERT OF NORTHERN CALIFORNIA

LOS OSOS COMMUNITY SERVICES DISTRICT

MWH Walnut Creek, California

LOS OSOS WASTEWATER PROJECT
STRUCTURAL
STANDARD STRUCTURAL DETAILS -2

SHEET BC-GS-202

Plot Date: 09-FEB-2004 15:25
File: N:\Projects\los_osos\Collect_Sys\PS\str\BC-GS-202.dgn
Job No: 1481166

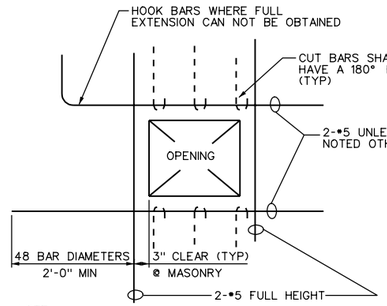

NOTE:

REINFORCING SHOWN IS IN ADDITION TO NORMAL REINFORCING AND SHALL BE PLACED WITH EACH LAYER OF BARS PROVIDED

TYPICAL REINFORCEMENT AT MASONRY WALL OPENING

REV 092299 — S-410

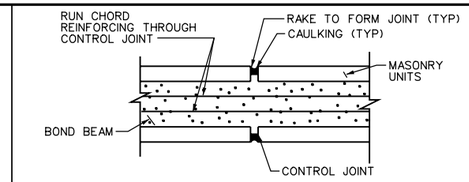

CONTROL JOINT AT BOND BEAM

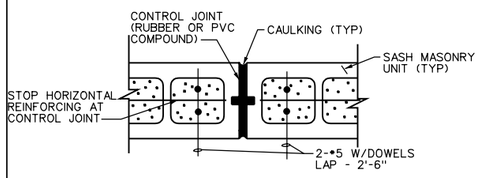

CONTROL JOINT AT WALL

MASONRY CONTROL JOINTS

REV 061599 — S-430

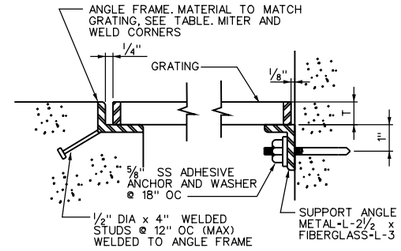

GRATING FRAME TABLE SIZED TO MATCH GRATING (FOR FIBERGLASS USE CONTINUOUS PULTRUDED FIBERGLASS SEAT & ANCHOR)				
GRATING DEPTH T	FRAME ANGLE (STEEL)		GRATING DEPTH T	FRAME ANGLE
1"	1 3/4 x 1 1/4 x 1/4 (1 1/4X 1 1/4X 1/4)		2"	*2 1/2 x 2 1/2 x 1/2
1 1/4"	2 x 1 1/2 x 1/4 (1 1/2X 1 1/2X 1/4)		2 1/4"	2 1/2 x 2 1/2 x 1/4
1 1/2"	1 3/4 x 1 3/4 x 1/4		2 1/2"	3 x 3 x 1/2
1 3/4"	2 x 2 x 1/4			

* OR USE 2 1/2 x 2 1/2 x 1/4 W/1/4" SHIM PLATE WELDED TO BOTTOM

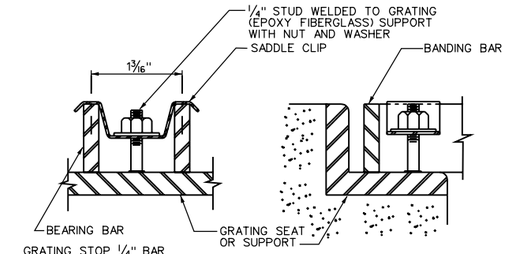

GRATING CLIP DETAIL

GRATING STOP 1/4" BAR WELD TO SUPPORT BEAM AT ALL INTERMEDIATE AND END SUPPORTS (SEAL WELD GALVANIZED STEEL, BOND FIBERGLASS BAR TO SUPPORT BEAM). OMIT WHERE GRATING IS CONT OVER SUPPORT BEAM.

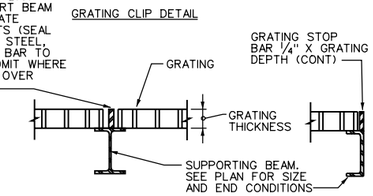

GRATING STOP DETAIL

NOTES:

1. UNLESS INDICATED OTHERWISE, ALL GRATING SHALL BE ALUMINUM
2. GRATING DEPTH TO BE DETERMINED BY MANUFACTURER AND APPROVED BY ENGINEER (UNO)
3. ALL ENDS AND OPENINGS SHALL BE BANDED
4. WEIGHT OF GRATING SECTION SHALL NOT EXCEED 80 LBS
5. METAL BEARING BARS SHALL BE DEPTH T x 3/16" @ 1 3/16" OC CROSS BARS SHALL BE @ 4" OC
6. PROVIDE A MINIMUM OF 4 CLIPS PER GRATING PANEL, APPROX 4" FROM PANEL CORNERS. MAXIMUM CLIP SPACING AT 36" OC
7. MATERIALS:
   a. ALUMINUM GRATING - USE ALUMINUM ANGLE SUPPORTS AND STAINLESS STEEL BOLTS AND CLIPS
   b. GALVANIZED STEEL GRATING - USE STEEL ANGLE SUPPORTS, BOLTS AND CLIPS. GALVANIZE AFTER FABRICATION
   c. STAINLESS STEEL GRATING - USE STAINLESS STEEL ANGLE SUPPORTS, BOLTS AND CLIPS
   d. FIBERGLASS GRATING - USE FIBERGLASS FOR ALL COMPONENTS EXCEPT DRILLED ANCHORS: ALL CUT EDGES SHALL BE SEALED WITH RESIN: BONDING: USE EPOXY ADHESIVE BONDING AGENT

GRATING

REV 081999 — S-501

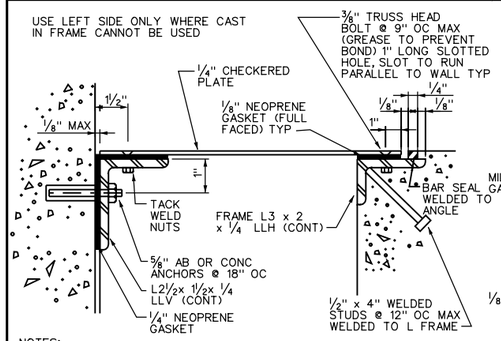

NOTES:

1. CHECKERED PLATE COVERS SHALL BE ALUMINUM UNLESS INDICATED OTHERWISE
2. ALUM CHK'D PLATE -- ALUM FRAME AND STUDS, AND SS ANCHORS AND FASTENERS INSTEAD OF TACK WELDING SS NUTS, USE BACKER PLATE 1/4 X 1 1/2 X 3/8 AND DRILL AND TAP
3. STEEL CHK'D PLATE -- STEEL FRAME AND ANCHORS, SEAL ALL WELDS (GALV AFTER FABRICATION)
4. SS CHK'D PLATE -- SS FRAME AND ANCHORS
5. MAX WEIGHT OF PLATES = 80 LBS

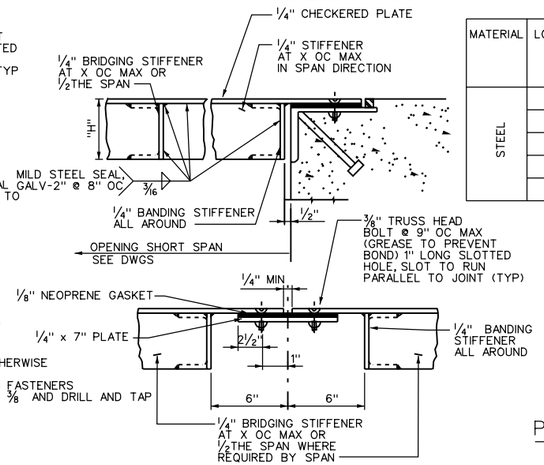

PLATE JOINT DETAIL

MATERIAL	LOADING (psf)	X MAX (in)	MAXIMUM SPAN OF OPENING (ft)						
			STIFFENER SIZE 1/4" X H						
			2"	3"	4"	5"	C6X8.2	C7X9.8	C8X11.5
STEEL	100	40	4.5	6	7	8.5	12	14	15.5
	150	35	4	5	6	7.5	11.5	13	14.5
	200	30	3.5	4.5	5.5	7	11	12.5	14
	250	30	3	4	5	6	10.5	12	13
	300	30	3	4	4.5	5.5	10	11.5	12.5

MATERIAL	X MAX (in)	MAXIMUM SPAN OF OPENING (ft)				
		STIFFENER SIZE 1/4" X H				
		2"	3"	C4X2.331	C5X3.089	C6X4.030
ALUMINUM	25	4.5	5.5	6	7	8
	25	3.5	4.5	5.5	6.5	7.5
	20	3.5	4.5	5.5	6.5	7
	20	3	4	5	6	7
	20	3	3.5	5.0	5.5	6.5

NOTE: "X" = MAXIMUM SPAN OF UNSTIFFENED PLATE COVER

PLATE COVERED OPENING

REV 081999 — S-502

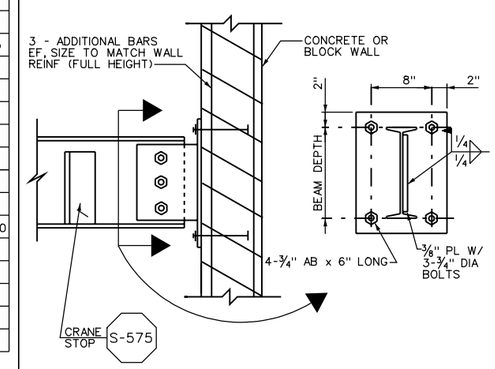

MONORAIL BEAM SUPPORT AT END WALL

REV 082699 — S-572

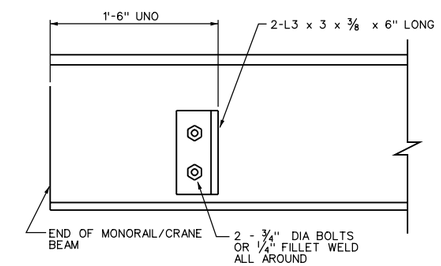

NOTES:

1. FOR 8" BEAMS USE A 4" LONG L AND WELD TO BEAM.
2. LOCATE STOP TO MATCH TROLLEY BUMPER LOCATION.

TROLLEY STOP DETAIL

REV 083099 — S-575

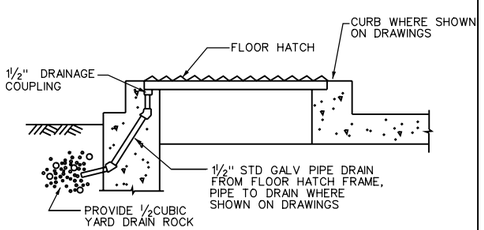

ACCESS HATCH DETAIL

REV 081899 — S-591

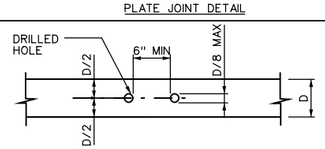

NOTCHING OF JOISTS, RAFTERS & BEAMS IS NOT ALLOWED

JOIST, RAFTER & BEAM

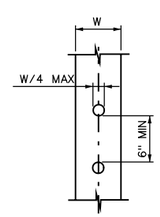

WOOD STUD

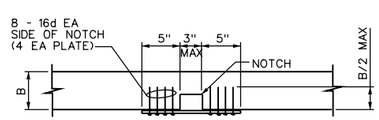

WHERE NOTCH IS GREATER THAN 1" PROVIDE 12 GA STRAP WITH WIDTH SAME AS DOUBLE TOP PL

DOUBLE TOP PLATE

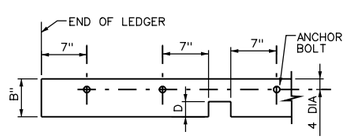

WHERE DEPTH OF NOTCH D IS GREATER THAN B/5 PROVIDE ANCHOR BOLT EACH SIDE OF NOTCH AS SHOWN

LEDGER

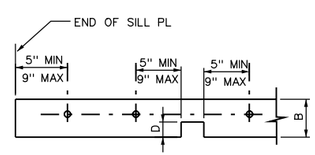

WHERE DEPTH OF NOTCH D IS GREATER THAN B/5 PROVIDE ANCHOR BOLT EACH SIDE OF NOTCH AS PER END REQUIREMENT

SILL PLATE

WOOD FRAMING: HOLES AND NOTCHING

REV 081899 — S-603

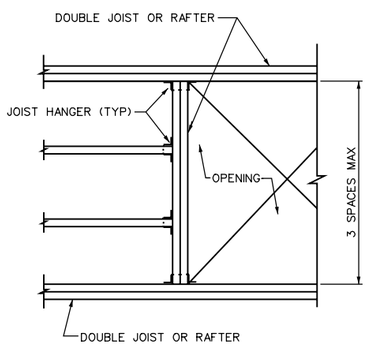

OPENING IN HORIZONTAL WOOD FRAMING

REV 081899 — S-606

REGISTERED PROFESSIONAL ENGINEER — JOHN W. WILCOX — No. S-3395 — Exp. 12-31-05 — STRUCTURAL — STATE OF CALIFORNIA

REV	DATE	BY	DESCRIPTION

SCALE

WARNING: 0 1/2 1 — IF THIS BAR DOES NOT MEASURE 1" THEN DRAWING IS NOT TO SCALE

DESIGNED MWH
DRAWN MWH
CHECKED C.WILCOX

SUBMITTED BY
JOHN A. BERGEN — C31069 LICENSE NO. — 2/16/2004 DATE
STEVE J. HYLAND — C23892 LICENSE NO. — 2/16/2004 DATE

DIGALERT — DIAL TOLL FREE 1-800-642-2444 — AT LEAST TWO DAYS BEFORE YOU DIG — UNDERGROUND SERVICE ALERT OF NORTHERN CALIFORNIA

LOS OSOS COMMUNITY SERVICES DISTRICT

MWH Walnut Creek, California

LOS OSOS WASTEWATER PROJECT
STRUCTRUAL
STANDARD STRUCTURAL DETAILS-3

SHEET BC-GS-203

Plot Date: 09-FEB-2004 15:26
File: N:\Projects\los_osos\Collect_Sys\PS\str\BC-GS-203.dgn
Job No: 1481166

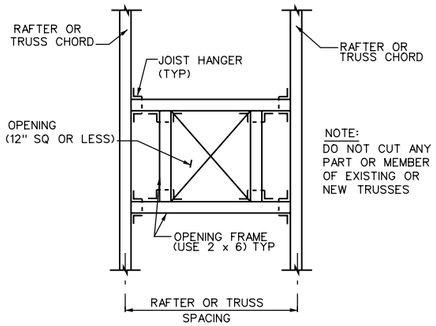

ROOF OPENING FRAMING — S-607

REV 081899

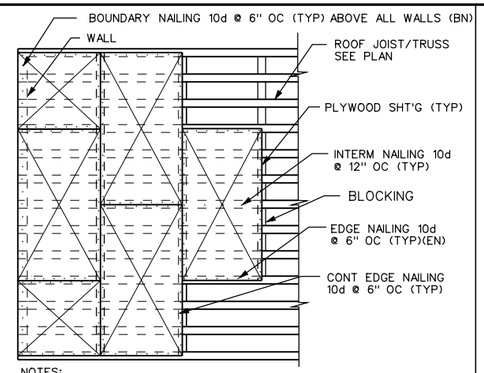

NOTES:

1. EDGE OF PLYWOOD ROOF OPENINGS SHALL BE BOUNDRY NAILED.
2. EACH PLYWOOD SHEET SHALL SPAN THREE BEARINGS MIN.
3. ALL EDGES OF PLYWOOD SHEET SHALL BE BLOCKED.

TYPICAL ROOF DIAPHRAGM — S-901

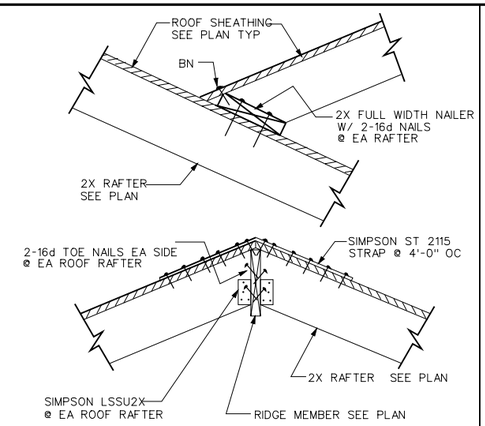

ROOF VALLEY AND RIDGE DETAIL — S-902

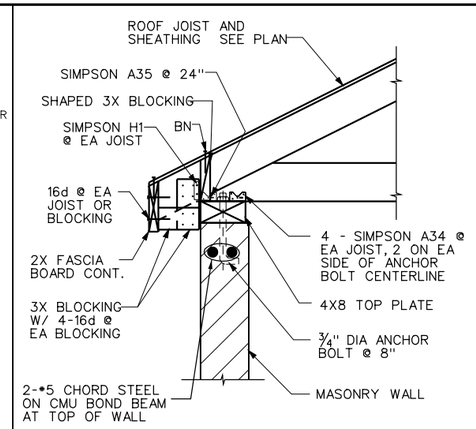

JOIST TO WALL CONNECTION — S-903

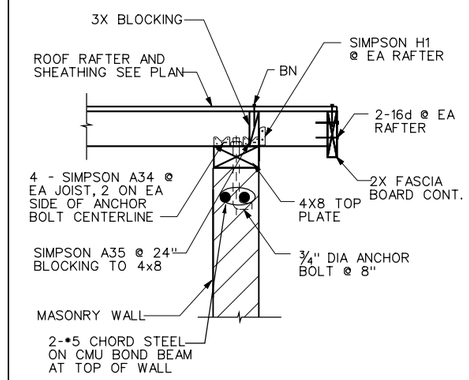

RAFTER TO WALL CONNECTION — S-904

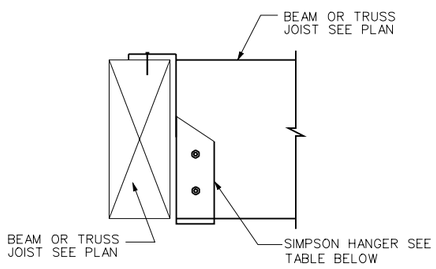

MEMBER SIZE	HANGER	MEMBER SIZE	HANGER
2X	U2X	3 1/8" LAM	HU/12
4X	HUTF	5 1/8" LAM	HU/13.5
6X	HUTF	3X	U3X

JOIST OR BEAM TO BEAM CONNECTION DETAIL — S-905

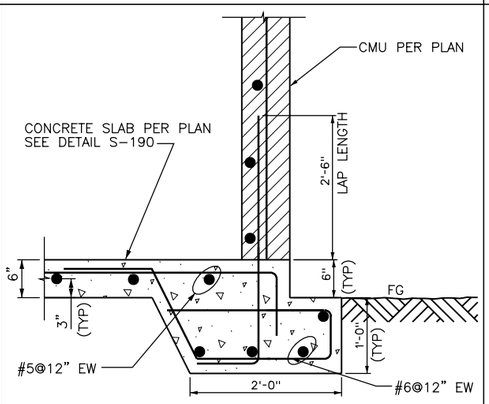

FOUNDATION DETAIL — S-906

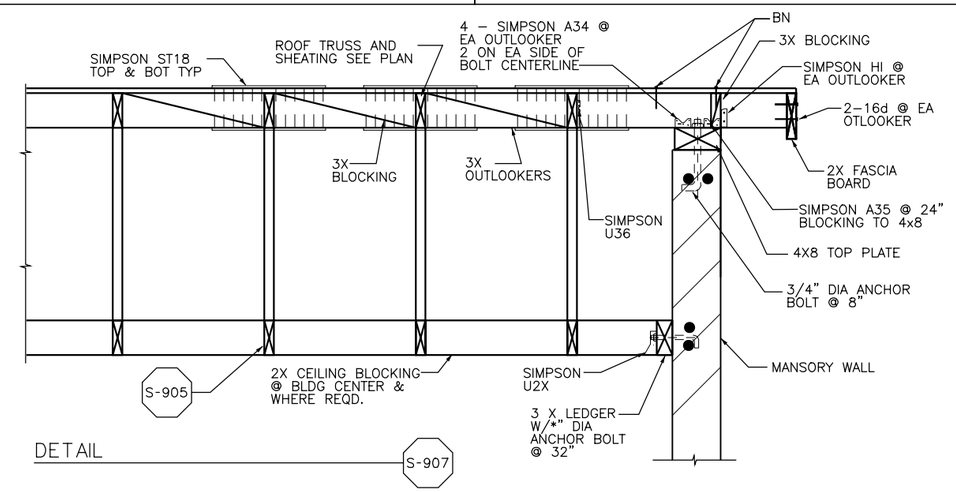

S-905

DETAIL — S-907

REGISTERED PROFESSIONAL ENGINEER — JOHN W. WILCOX — No. S-3195 — Exp. 12-31-05 — STRUCTURAL — STATE OF CALIFORNIA

REV	DATE	BY	DESCRIPTION

SCALE

WARNING: 0 1/2 1 — IF THIS BAR DOES NOT MEASURE 1" THEN DRAWING IS NOT TO SCALE

DESIGNED MWH
DRAWN MWH
CHECKED C.WILCOX

SUBMITTED BY
JOHN A. BERGEN — C31069 LICENSE NO. — 2/16/2004 DATE
STEVE J. HYLAND — C23892 LICENSE NO. — 2/16/2004 DATE

DIGALERT — DIAL TOLL FREE 1-800-642-2444 — AT LEAST TWO DAYS BEFORE YOU DIG — UNDERGROUND SERVICE ALERT OF NORTHERN CALIFORNIA

LOS OSOS COMMUNITY SERVICES DISTRICT

MWH Walnut Creek, California

LOS OSOS WASTEWATER PROJECT
STRUCTURAL
STANDARD STRUCTURAL DETAILS -4

SHEET BC-GS-204

Job No: 1481166 File: N:\Projects\los_osos\Collect_Sys\PS\str\BC-GS-204.dgn Plot Date: 09-FEB-2004 15:33

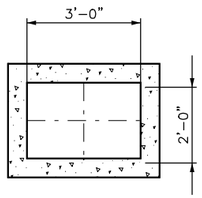

PRECAST CLEANOUT VAULT FOUNDATION PLAN

SCALE 1/2"= 1'-0"

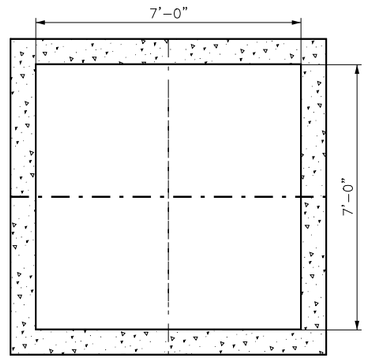

PRECAST VALVE VAULT FOUNDATION PLAN

SCALE 1/2"= 1'-0"

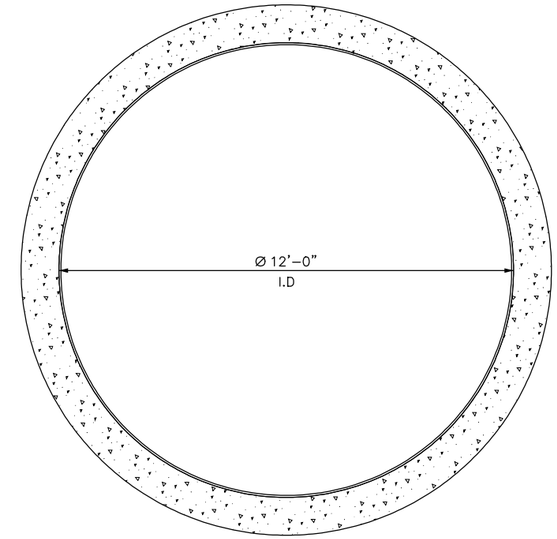

FOUNDATION PLAN

SCALE 1/2"= 1'-0"

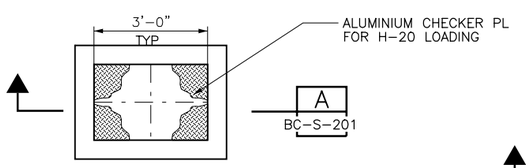

PRECAST CLEANOUT VAULT TOP PLAN

SCALE 1/2"= 1'-0"

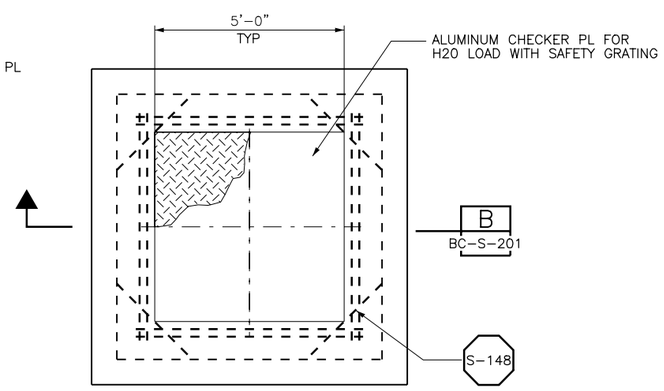

PRECAST VALVE VAULT TOP PLAN

SCALE 1/2"= 1'-0"

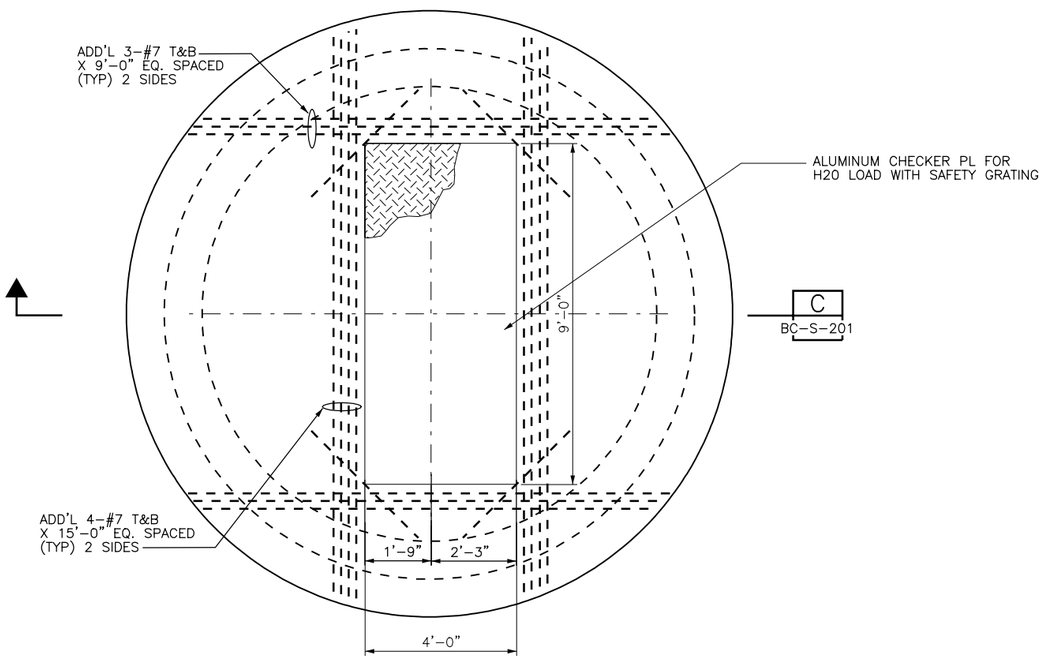

TOP PLAN

SCALE 1/2"= 1'-0"

REGISTERED PROFESSIONAL ENGINEER
JOHN W. BERGEN
No. S-3195
Exp. 12-31-05
STRUCTURAL
STATE OF CALIFORNIA

REV	DATE	BY	DESCRIPTION

SCALE: AS SHOWN

WARNING: 0 1/2 1 — IF THIS BAR DOES NOT MEASURE 1" THEN DRAWING IS NOT TO SCALE

DESIGNED S.BATRA
DRAWN S.BATRA
CHECKED C.WILCOX

SUBMITTED BY
JOHN A. BERGEN — C31069 LICENSE NO. — 2/16/2004 DATE
STEVE J. HYLAND — C23892 LICENSE NO. — 2/16/2004 DATE

DIGALERT — DIAL TOLL FREE 1-800-642-2444 AT LEAST TWO DAYS BEFORE YOU DIG — UNDERGROUND SERVICE ALERT OF NORTHERN CALIFORNIA

LOS OSOS COMMUNITY SERVICES DISTRICT

MWH Walnut Creek, California

LOS OSOS WASTEWATER PROJECT
STRUCTURAL
SUBMERSIBLE PUMP STATIONS & VALVE VAULTS- FOUNDATION AND TOP PLAN

SHEET BC-S-200

Job No: 1481166 File: N:\Projects\los_osos\Collect_Sys\PS\str\BC-S-200.dgn Plot Date: 09-FEB-2004 15:26

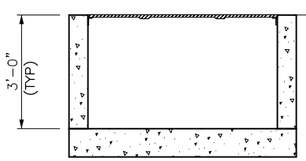

SECTION A
SCALE1/2"=1'
BC-S-200

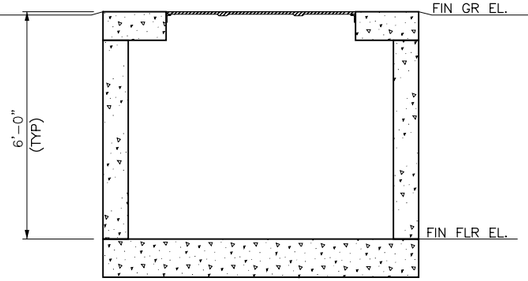

SECTION B
SCALE1/2"=1'
BC-S-200

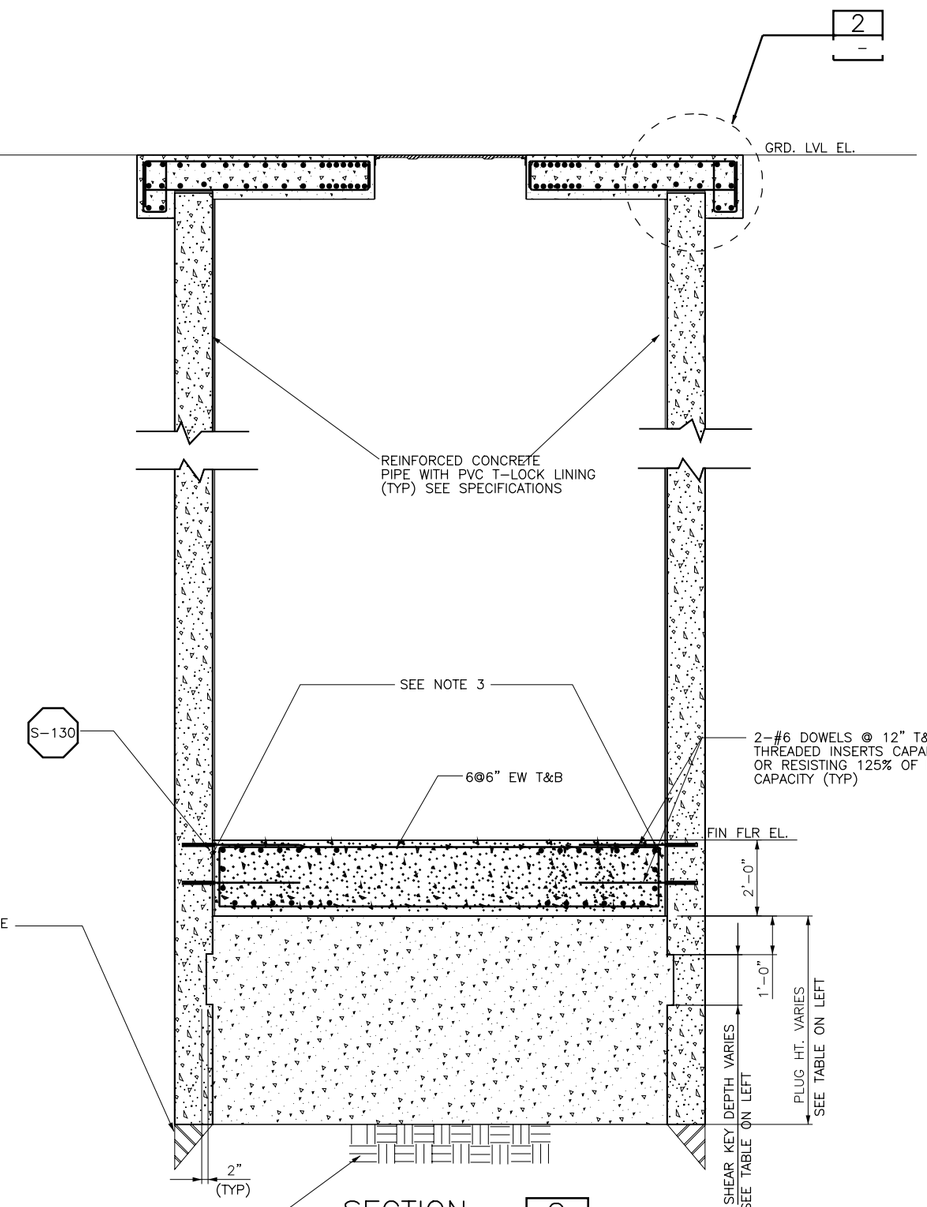

SECTION C
SCALE1/2"=1'
BC-S-200

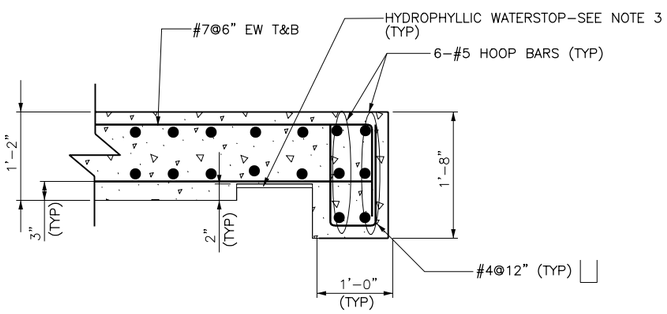

DETAIL 2
SCALE 1"=1'

PUMPS	TRIPLEX	DUPLEX
SITE LOCATION	LUPINE	SUNNY OAKS
SUBMERSIBLE PS GRD ELE.	13.60'	154.85'
SUBMERSIBLE PS FIN FLR ELE.	-4.90'	141.85'
MIN SHEAR KEY DEPTH	1'-5"	1'-2"
MIN PLUG DEPTH	9'-5"	7'-0"
VALVE VAULT FIN GR ELE.	13.35'	154.62'
CLEANOUT VAULT FIN GR ELE.	12.90'	154.70'

NOTES:

1. REFER THE ATTACHED TABLE FOR THE GROUND ELEVATIONS AND FINISHED FLOOR ELEVATIONS OF THE WET WELL, PRECAST VALVE VAULT AND CLEAN UP VAULT AT VARIOUS SITES.
2. 12' INTERNAL DIA PRECAST CONCRETE SECTIONS USED FOR THE SUBMERSIBLE PUMP STATIONS SHALL BE REINFORCED CONCRETE PIPE PER ASTM C-76, CLASS III. REINFORCEMT SHALL BE CIRCULAR. JOINTS SHALL BE STEEL FLUSH BELL WITH O-RING GASKET, CONFORMING TO ASTM C-361.
3. HYDROPHILLIC WATERSTOP-ADEKA ULTRASEAL P-201 CONTINUOUS 1/4" BEAD TO BE CURED PRIOR TO CONCRETE TOP PLACEMENT. PLACE AT FLOOR/WALL CENTERLINE.

REGISTERED PROFESSIONAL ENGINEER
RICHARD JOHN WILCOX
No. S-3195
Exp. 12-31-05
STRUCTURAL
STATE OF CALIFORNIA

REV	DATE	BY	DESCRIPTION

SCALE: AS SHOWN

WARNING: 0 1/2 1 — IF THIS BAR DOES NOT MEASURE 1" THEN DRAWING IS NOT TO SCALE

DESIGNED S.BATRA
DRAWN S.BATRA
CHECKED C.WILCOX

SUBMITTED BY
JOHN A. BERGEN — C31069 LICENSE NO. — 2/16/2004 DATE
STEVE J. HYLAND — C23892 LICENSE NO. — 2/16/2004 DATE

DIGALERT — DIAL TOLL FREE 1-800-642-2444 AT LEAST TWO DAYS BEFORE YOU DIG — UNDERGROUND SERVICE ALERT OF NORTHERN CALIFORNIA

LOS OSOS COMMUNITY SERVICES DISTRICT

MWH Walnut Creek, California

LOS OSOS WASTEWATER PROJECT
STRUCTURAL
SUBMERSIBLE PUMP STATIONS & VALVE VAULTS- SECTION AND DETAILS

SHEET BC-S-201

Job No: 1481166 File: N:\Projects\los_osos\Collect_Sys\PS\str\BC-S-201.dgn Plot Date: 09-FEB-2004 15:27

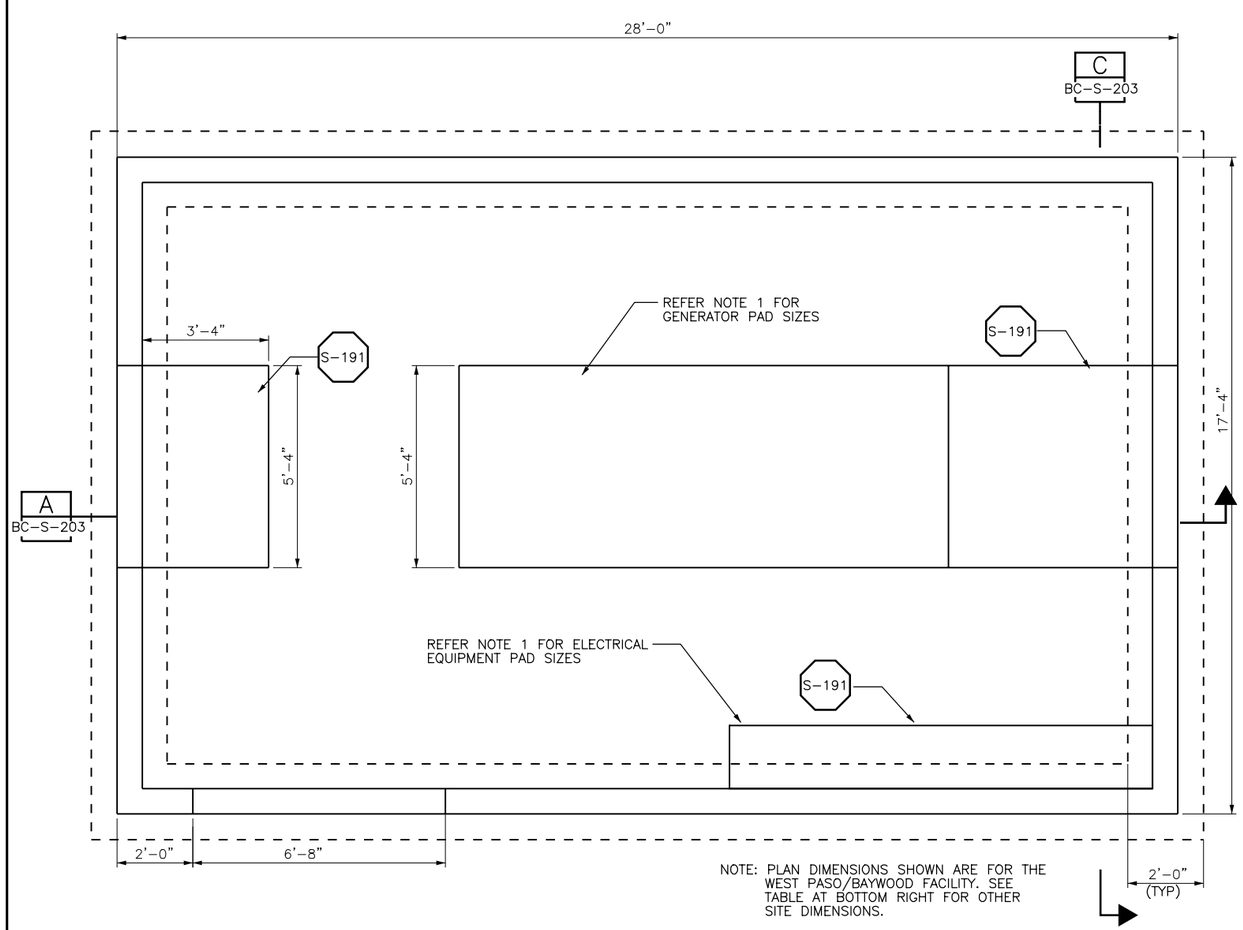

NOTE: PLAN DIMENSIONS SHOWN ARE FOR THE WEST PASO/BAYWOOD FACILITY. SEE TABLE AT BOTTOM RIGHT FOR OTHER SITE DIMENSIONS.

FOUNDATION PLAN

SCALE: 1/2"=1'-0"

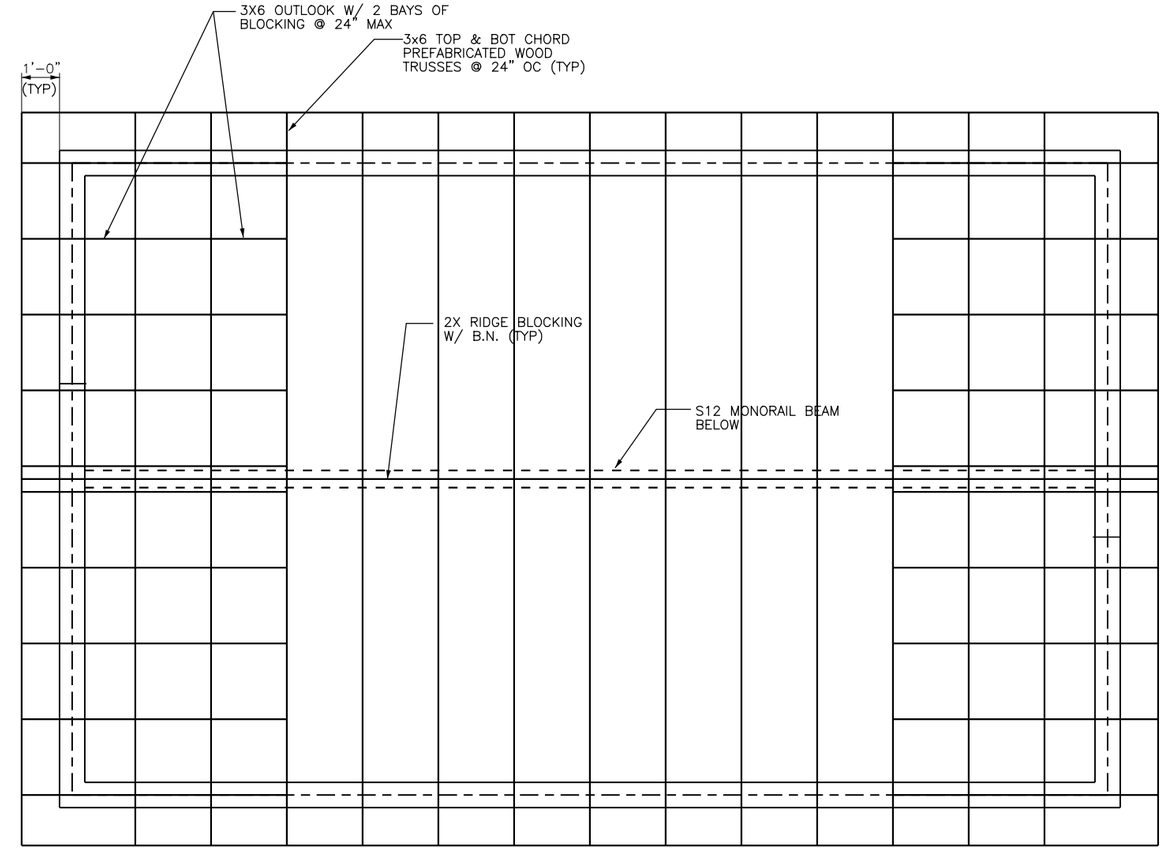

ROOF PLAN

SCALE: 1/2"=1'-0"

NOTES:

1. CONTRACTOR SHALL VERIFY ALL THE SIZES LOCATIONS AND DETAILS OF EQUIPMENT, LOUVERED VENTS, DOORS PUMP AND TANK PADS. SEE MECH AND ELECTRICAL DRAWINGS.
2. FINISH GRADE AROUND THE BUILDING PERIMETER SHALL BE SLOPED AWAY FROM THE BUILDING LINE.
3. WOOD FRAMING :
   A. FOR FRAMING AROUND OPENINGS IN WOOD ROOF SEE DETAIL S-606 AND S-607.
   B. NAILNG SHALL BE PER UBC 97 TABLE 23-11-B-1 UNLESS INDICATED OTHERWISE.
   C. PLYWOOD FOR ROOFS SHALL BE 5/8" CD-X (INDEX 24/16) W/ EXPOSURE "C" SIDE UP & EXP. 1 GLUE, BLOCKED ON ALL SIDES, NAILED W/ 10d COMMON NAILS,
      4" OC BN
      6" OC EN
      12" OC FIELD, SEE S-901
   E. METAL FRAMING DEVICES SHOWN ON THE DWGS CAN BE REPLACED W/ EQUIVALENT DESIGNED DEVICES SUBJECT TO THE APPROVAL OF THE ENGINEER.
4. WOOD TRUSS NOTES:
   A. TRUSS MANUFACTURER'S ENGINEER SHALL DESIGN ALL TRUSS CONNECTIONS. TRUSS SHOWN IS ONLY REPRESENTATIVE.
   B. TRUSS SHALL BE DOUGLAS FIR AND DESIGNED BY THE MFR FOR THE FOLLOWING LOADS:

DEAD LOAD

TOP CHORD------26 PSF
BOTTOM CHORD----28 PSF
ACTUAL TRUSS WEIGHT
VENTILATION/ MECHANICAL UNITS ON THE ROOF IF REQD AS PER MECH'L-(CONTRACTOR IS TO PROVIDE THIS LOADING TO TRUSS ENGINEER)

LIVE LOAD

20 PSF BASIC

WIND LOAD

80 MPH WIND LOAD EXPOSURE C (PER UBC 97).

WIND PERPENDICULAR TO RIDGE

LEEWARD ROOF = 14 PSF (OUTWARD)
WINDWARD ROOF = 6 PSF (INWARD)
WIND PARALLEL TO ROOF = 18 PSF (UPWARD)

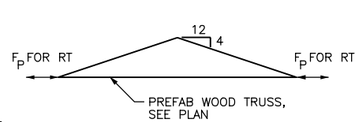

C. TOP CHORD (TC) AXIAL LOAD MAY BE EITHER COMPRESSION OR TENSION. FOR SEISMIC LOADS IN TOP CHORD A 1/3RD INCREASE IN ALLOWABLE STRESSES MAY BE USED.

TRUSS	(TC) AXIAL LOAD F_P
RT-1	1.5 K

D. WALL TIE LOAD ACTS AT BASE OF SHOE AT WALL BEARING LOCATIONS. TRUSS DESIGN SHALL ACCOUNT FOR ADDED MOMENT DUE TO ECCENTRICITY FROM WALL TIE LOADS.

E. BOTTOM CHORD SHALL BE DESIGNED FOR A 250 LB CONCENTRATED LOAD AT ANY LOCATION BETWEEN PANEL POINTS. SEE MECHANICAL DRAWINGS.

F. LOADS GIVEN ARE FOR ALLOWABLE STRESS DESIGN UNO

STANDBY POWER FACILITY	BUILDING DIMENSIONS
LUPINE	25'-4" X 14'-8"
WEST PASO/BAYWOOD	28' X 17'-4"
EAST YSABEL	25'-4" X 14'-8"
EAST PASO	25'-4" X 14'-8"
MOUNTAIN VIEW	25'-4" X 14'-8"
SUNNY OAKS	21'-8" X 14'-8"

REGISTERED PROFESSIONAL ENGINEER JOHN W. WILCOX No. S-3195 Exp. 12-31-05 STRUCTURAL STATE OF CALIFORNIA

REV	DATE	BY	DESCRIPTION

SCALE: AS SHOWN

WARNING: 0 1/2 1 — IF THIS BAR DOES NOT MEASURE 1" THEN DRAWING IS NOT TO SCALE

DESIGNED S.BATRA
DRAWN S.BATRA
CHECKED C.WILCOX

SUBMITTED BY
JOHN A. BERGEN — C31069 LICENSE NO. — 2/16/2004 DATE
STEVE J. HYLAND — C23892 LICENSE NO. — 2/16/2004 DATE

DIGALERT — DIAL TOLL FREE 1-800-642-2444 AT LEAST TWO DAYS BEFORE YOU DIG — UNDERGROUND SERVICE ALERT OF NORTHERN CALIFORNIA

LOS OSOS COMMUNITY SERVICES DISTRICT

MWH Walnut Creek, California

LOS OSOS WASTEWATER PROJECT
STRUCTURAL
STANDBY POWER BUILDING
FOUNDATION AND ROOF PLAN

SHEET BC-S-202

Plot Date: 09-FEB-2004 15:27
File: N:\Projects\los_osos\Collect_Sys\PS\str\BC-S-202.dgn
Job No: 1481166

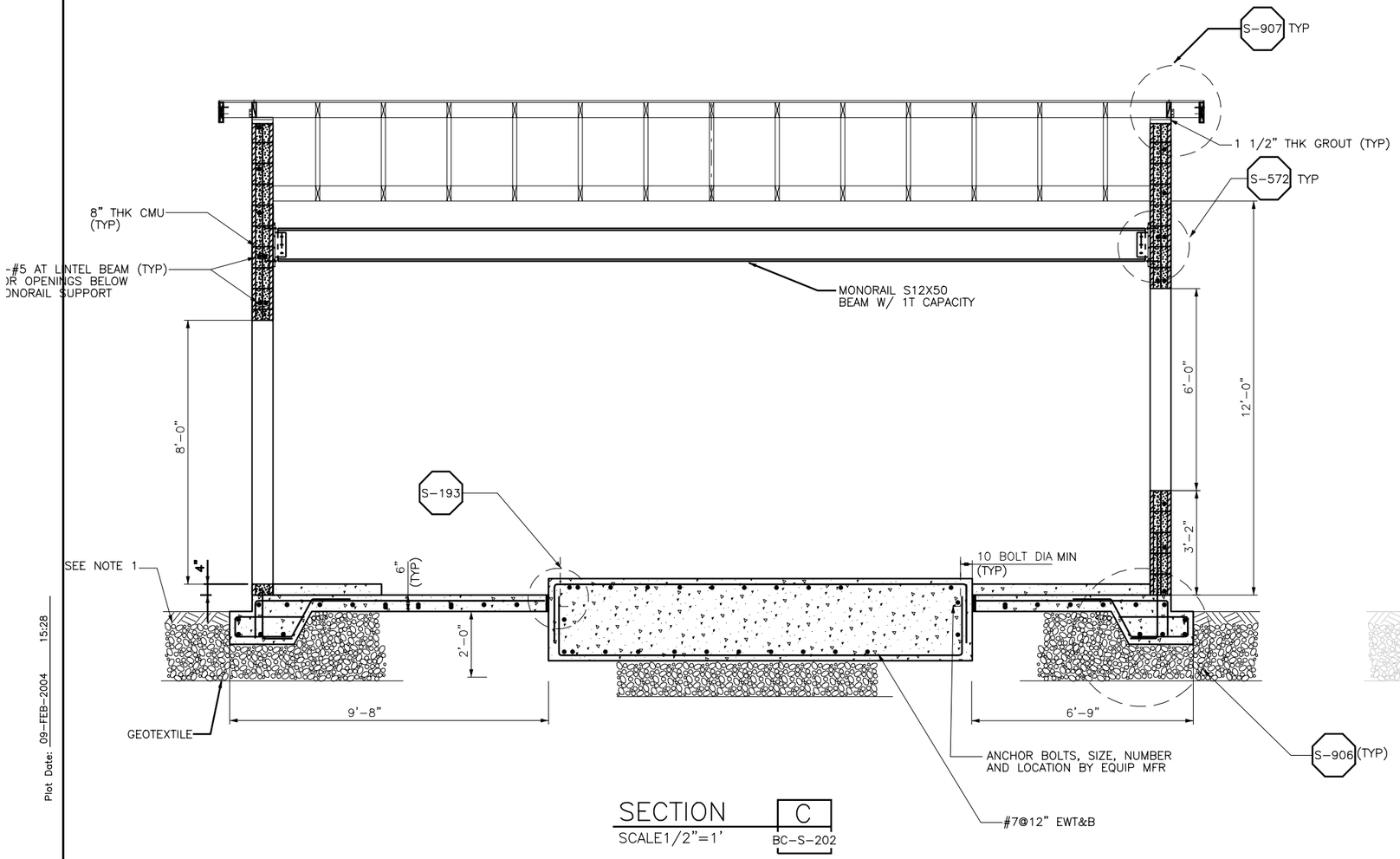

SECTION C
SCALE1/2"=1'
BC-S-202

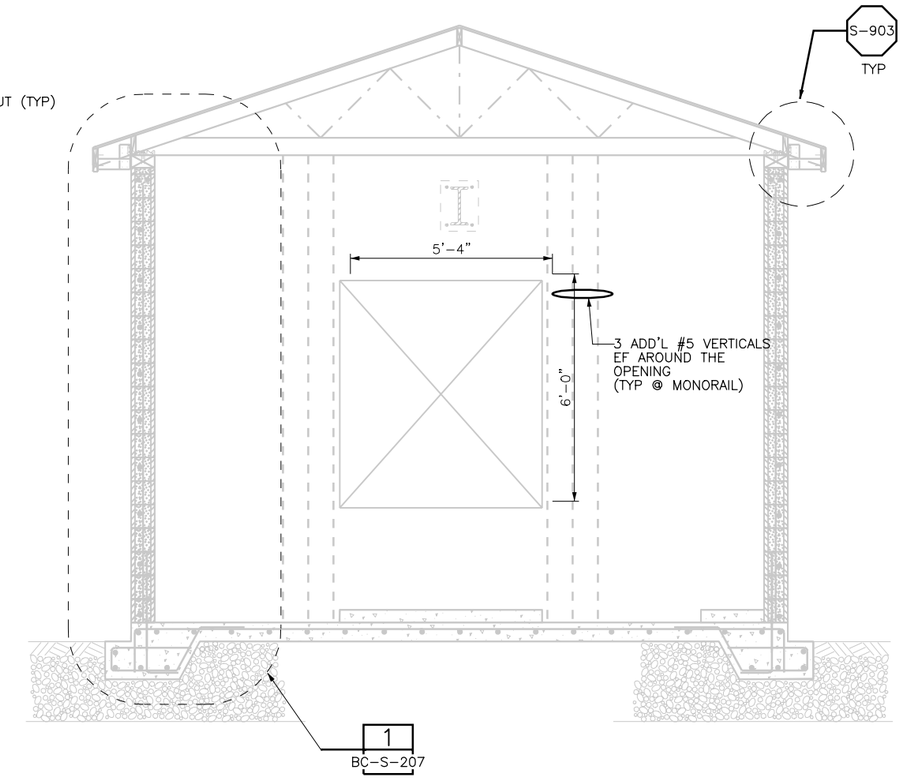

SECTION C
SCALE1/2"=1'
BC-S-202

NOTE:

1. 1' - 95 % COMPACTED GRANULAR FILL BELOW FOOTING TO EXTEND 5' BEYOND THE EXTERIOR WALL ON ALL SIDES OF BUILDING . PROVIDE GEOTEXTILE BELOW THE GRANULAR FILL. REFER SPECIFICATION

REGISTERED PROFESSIONAL ENGINEER
CRAIG JOHN WILCOX
No. S-3195
Exp. 12-31-05
STRUCTURAL
STATE OF CALIFORNIA

REV	DATE	BY	DESCRIPTION

SCALE: AS SHOWN

WARNING: 0 1/2 1 — IF THIS BAR DOES NOT MEASURE 1" THEN DRAWING IS NOT TO SCALE

DESIGNED S.BATRA
DRAWN S.BATRA
CHECKED C.WILCOX

SUBMITTED BY
JOHN A. BERGEN — C31069 LICENSE NO. — 2/16/2004 DATE
STEVE J. HYLAND — C23892 LICENSE NO. — 2/16/2004 DATE

DIGALERT — DIAL TOLL FREE 1-800-642-2444 AT LEAST TWO DAYS BEFORE YOU DIG — UNDERGROUND SERVICE ALERT OF NORTHERN CALIFORNIA

LOS OSOS COMMUNITY SERVICES DISTRICT

MWH Walnut Creek, California

LOS OSOS WASTEWATER PROJECT
STRUCTURAL
STANDBY POWER BUILDING
SECTION AND DETAILS

SHEET BC-S-203

Job No: 1481166 File: N:\Projects\los_osos\Collect_Sys\PS\str\BC-S-203.dgn Plot Date: 09-FEB-2004 15:28

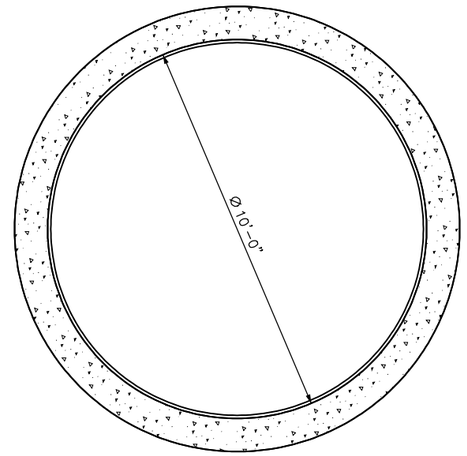

FOUNDATION PLAN

SCALE: 1/2"=1'-0"

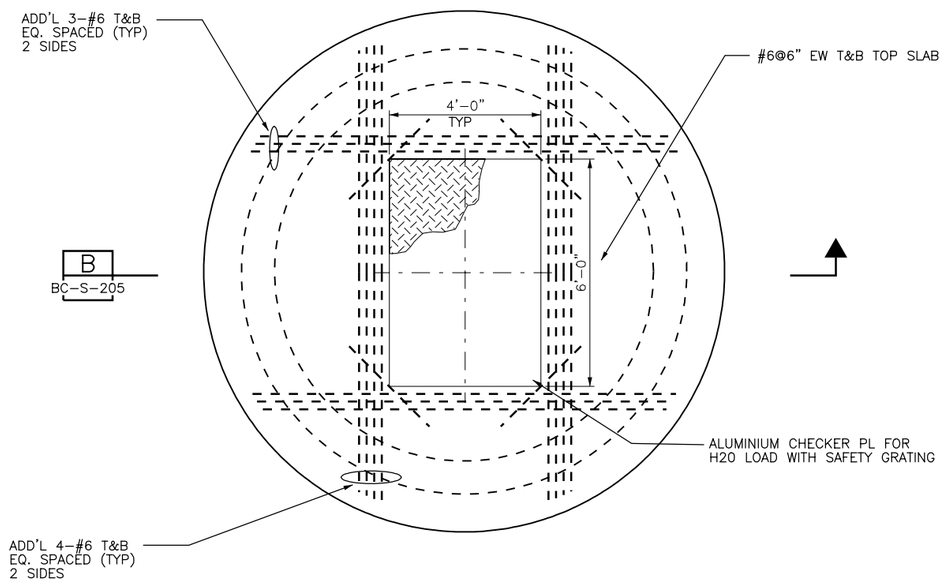

TOP PLAN

SCALE: 1/2"=1'-0"

REGISTERED PROFESSIONAL ENGINEER
GREGORY JOHN WILCOX
No. S-3195
Exp. 12-31-05
STRUCTURAL
STATE OF CALIFORNIA

REV	DATE	BY	DESCRIPTION

SCALE: AS SHOWN

WARNING: 0 1/2 1 — IF THIS BAR DOES NOT MEASURE 1" THEN DRAWING IS NOT TO SCALE

DESIGNED S.BATRA
DRAWN S.BATRA
CHECKED C.WILCOX

SUBMITTED BY
JOHN A. BERGEN — C31069 LICENSE NO. — 2/16/2004 DATE
STEVE J. HYLAND — C23892 LICENSE NO. — 2/16/2004 DATE

DIGALERT — DIAL TOLL FREE 1-800-642-2444 AT LEAST TWO DAYS BEFORE YOU DIG — UNDERGROUND SERVICE ALERT OF NORTHERN CALIFORNIA

LOS OSOS COMMUNITY SERVICES DISTRICT

MWH Walnut Creek, California

LOS OSOS WASTEWATER PROJECT
STRUCTURAL
POCKET PUMP STATION
FOUNDATION AND ROOF PLAN

SHEET BC-S-204

Job No: 1481166 File: N:\Projects\los_osos\Collect_Sys\PS\str\BC-S-204.dgn Plot Date: 09-FEB-2004 15:28

NOTES:

1. REFER TO THE ATTACHED TABLE FOR THE GROUND ELEVATIONS AND FINISHED FLOOR ELEVATIONS OF THE POCKET PUMP STATION AND THE PRECAST VALVE VAULT
2. 10' INTERNAL DIA PRECAST CONCRETE SECTIONS USED FOR THE POCKET PUMP STATION SHALL BE REINFORCED CONCRETE PIPE PER ASTM C-76, CLASS III . REINFORCEMENT SHALL BE CIRCULAR. JOINTS SHALL BE STEEL FLUSH BELL JOINT WITH O-RING GASKET, CONFORMING TO ASTM C-361.
3. HYDROPHYLLIC WATERSTOP - ADEKA ULTRASEAL P-201, CONTINUOUS 1/4" BEAD TO BE CURED PRIOR TO CONCRETE TOP PLACEMENT (PLACE AT FLOOR/WALL CENTERLINE.

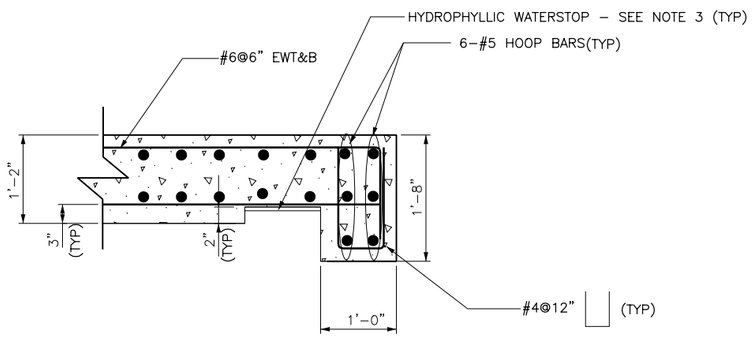

DETAIL 2
SCALE 1"=1'

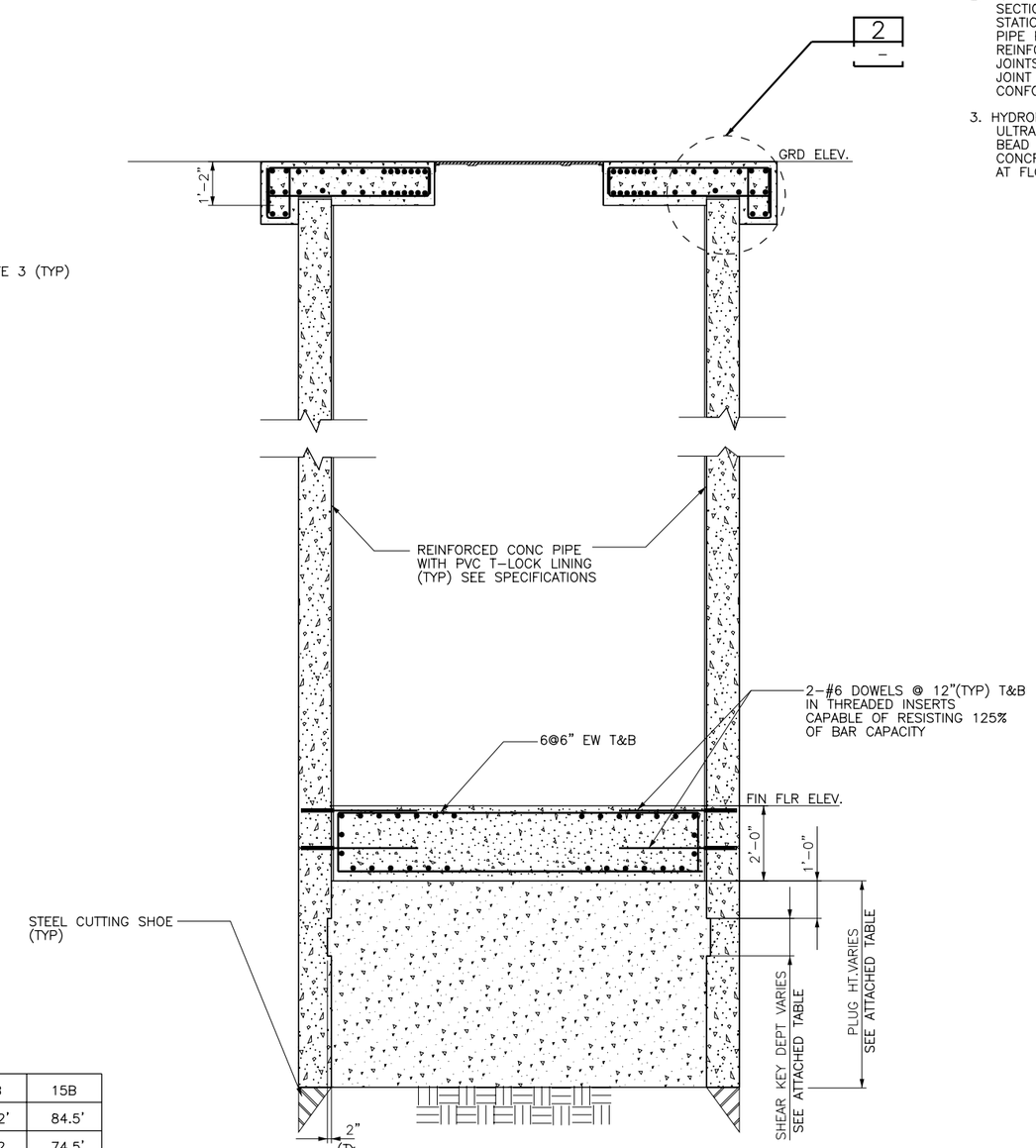

SECTION B
SCALE1/2"=1'
BC-S-204

SITE LOCATION →	04A	07A	08A	09A	09B	09C	10A	11A	12A	13A	13B	15B
POCKET PS GRD ELE.	8.1'	19.6'	13.7'	19.0'	62.4'	82.7'	32.6'	44.1'	58.0'	67.4'	87.2'	84.5'
POCKET PS FIN FLR ELE.	2.9'	9.6'	2.7'	5.0'	51.4'	72.7'	19.6'	35.1'	48.0'	57.4'	76.2	74.5'
MIN SHEAR KEY DEPTH	0'-10"	1'-0"	1'-2"	1'-3"	1'-2"	1'-0"	1'-3"	1'-0"	1'-0"	1'-0"	1'-2"	1'-0"
MIN PLUG DEPT	3'-6"	5'-6"	6'-0"	7'-0"	6'-0"	5'-6"	7'-0"	5'-6"	5'-6"	5'-6"	6'-0"	5'-6"

REGISTERED PROFESSIONAL ENGINEER JOHN W. WILCOX No. S-3195 Exp. 12-31-05 STRUCTURAL STATE OF CALIFORNIA

REV	DATE	BY	DESCRIPTION

SCALE: AS SHOWN

WARNING: 0 1/2 1 — IF THIS BAR DOES NOT MEASURE 1" THEN DRAWING IS NOT TO SCALE

DESIGNED S.BATRA
DRAWN S.BATRA
CHECKED C.WILCOX

SUBMITTED BY
JOHN A. BERGEN — C31069 LICENSE NO. — 2/16/2004 DATE
STEVE J. HYLAND — C23892 LICENSE NO. — 2/16/2004 DATE

DIGALERT — DIAL TOLL FREE 1-800-642-2444 AT LEAST TWO DAYS BEFORE YOU DIG — UNDERGROUND SERVICE ALERT OF NORTHERN CALIFORNIA

LOS OSOS COMMUNITY SERVICES DISTRICT

MWH Walnut Creek, California

LOS OSOS WASTEWATER PROJECT
STRUCTURAL
POCKET PUMP STATION
SECTION AND DETAILS

SHEET BC-S-205

Job No: 1481166 File: N:\Projects\los_osos\Collect_Sys\PS\str\BC-S-205.dgn Plot Date: 09-FEB-2004 15:28

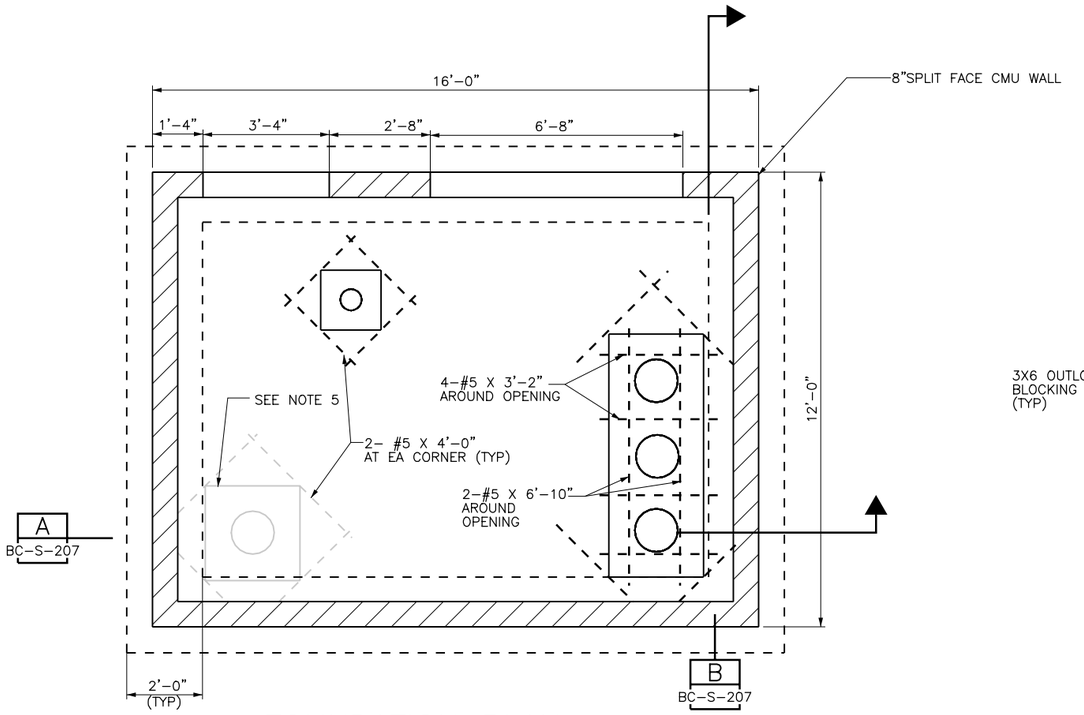

FOUNDATION PLAN

SCALE: 1/2"= 1'-0"

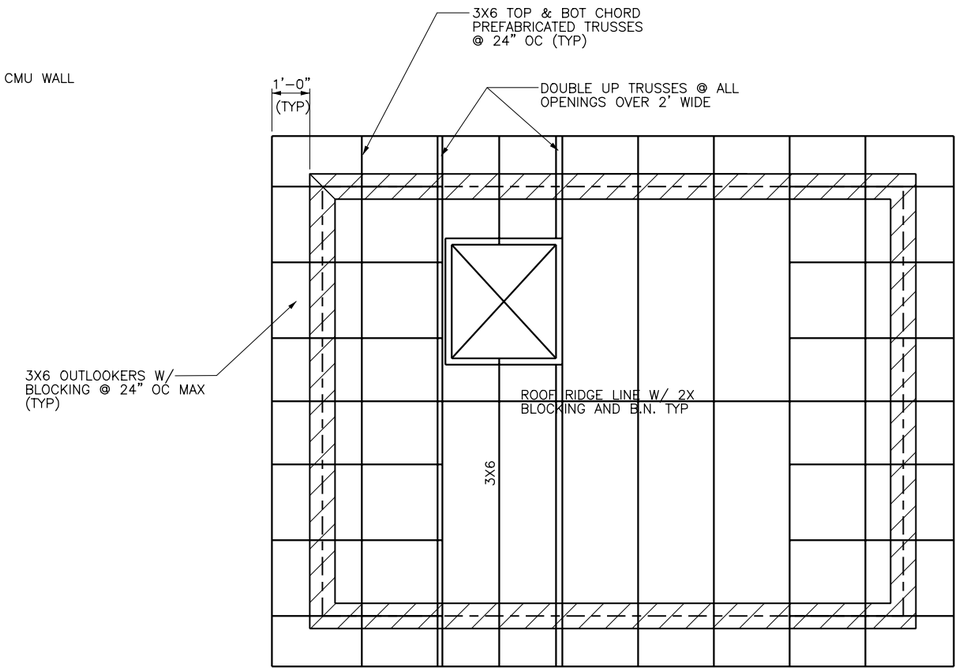

ROOF PLAN

SCALE: 1/2"= 1'-0"

NOTES:

1. CONTRACTOR SHALL VERIFY ALL THE SIZE LOCATION AND DETAIL OF EQUIPMENT, VENTS, DOORS, PUMP AND TANK PADS. SEE MECH AND ELECTRICAL DRAWINGS.

2. FINISH GRADE AROUND THE BUILDING PERIMETER SHALL BE SLOPED AWAY FROM THE BUILDING LINE.

3. WOOD FRAMING :

   A. FOR FRAMING AROUND OPENINGS IN WOOD ROOF SEE DETAIL S-606 AND S-607.

   B. NAILILNG SHALL BE PER UBC 97 ABLE 23-11-B-1 UNLESS INDICATED OTHERWISE.

   C. PLYWOOD FOR ROOFS SHALL BE 5/8" CD-X (INDEX 24/16) W/ EXPOSURE "C" SIDE UP & EXP.
   1 GLUE, BLOCKED ON ALL SIDES, NAILED W/ 10d COMMON NAILS,
   4" OC @ BN
   6" OC @ EN
   12" OC FIELD, SEE S-901/GS-3.

   E. METAL FRAMING DEVICES SHOWN ON THE DWGS CAN BE REPLACED W/ EQUIVALENT DESIGNED DEVICES SUBJECT TO THE APPROVAL OF THE ENGINEER.

4. WOOD TRUSS NOTES:

   A. TRUSS MANUFACTURER'S ENGINEER SHALL DESIGN ALL TRUSS CONNECTIONS. TRUSS SHOWN IS ONLY REPRESENTATIVE.

   B. TRUSS SHALL BE DOUGLAS FIR AND DESIGNED BY THE MFR FOR THE FOLLOWING LOADS:

   DEAD LOAD

   TOP CHORD------26 PSF
   BOTTOM CHORD-----28 PSF
   ACTUAL TRUSS WEIGHT
   VENTILATION/ MECHANICAL UNITS ON THE ROOF IF REQD AS PER MECH'L.- (CONTRACTOR IS TO PROVIDE THIS LOADING TO TRUSS ENGINEER)

   LIVE LOAD

   20 PSF BASIC

   WIND LOAD

   80 MPH WIND LOAD EXPOSURE C (PER UBC 97).

   WIND PERPENDICULAR TO RIDGE

   LEEWARD ROOF = 14 PSF (OUTWARD)
   WINDWARD ROOF = 6 PSF (INWARD)
   WIND PARALLEL TO ROOF = 18 PSF (UPWARD)

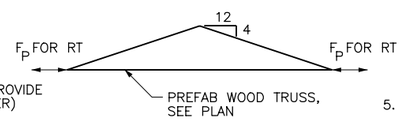

   C. TOP CHORD (TC) AXIAL LOAD MAY BE EITHER COMPRESSION OR TENSION. IT DENOTES SEISMIC LOADS IN TOP CHORD, THUS 1/3RD INCREASE MAY BE USED.

TRUSS	(TC) AXIAL LOAD F_P
RT-1	1.5 K

   D. WALL TIE LOAD ACTS AT BASE OF SHOE AT WALL BEARING LOCATIONS. TRUSS DESIGN SHALL ACCOUNT FOR ADDED MOMENT DUE TO ECCENTRICITY FROM WALL TIE LOADS.

   E. BOTTOM CHORD SHALL BE DESIGNED FOR A 250 LBS CONCENTRATED LOAD AT ANY LOCATION BETWEEN PANEL POINTS. SEE MECHANICAL DRAWINGS.

   F. LOADS GIVEN ARE FOR ALLOWABLE STRESS DESIGN U.N.O

5. REFER MECH DWGS FOR ALTERNATE LOCATIONS OF HARVEST WELLS AT DIFFERENT SITES.

REGISTERED PROFESSIONAL ENGINEER JOHN W. BERGEN No. S-3185 Exp. 12-31-05 STRUCTURAL STATE OF CALIFORNIA

REV	DATE	BY	DESCRIPTION

SCALE: AS SHOWN

WARNING: 0 1/2 1 — IF THIS BAR DOES NOT MEASURE 1" THEN DRAWING IS NOT TO SCALE

DESIGNED S.BATRA
DRAWN S.BATRA
CHECKED C.WILCOX

SUBMITTED BY

JOHN A. BERGEN	C31069 LICENSE NO.	2/16/2004 DATE
STEVE J. HYLAND	C23892 LICENSE NO.	2/16/2004 DATE

DIGALERT — DIAL TOLL FREE 1-800-642-2444 AT LEAST TWO DAYS BEFORE YOU DIG — UNDERGROUND SERVICE ALERT OF NORTHERN CALIFORNIA

LOS OSOS COMMUNITY SERVICES DISTRICT

MWH Walnut Creek, California

LOS OSOS WASTEWATER PROJECT

STRUCTURAL
HARVEST WELL BUILDING
FOUNDATION AND ROOF PLAN

SHEET BC-S-206

Plot Date: 09-FEB-2004 15:29
File: N:\Projects\los_osos\Collect_Sys\PS\str\BC-S-206.dgn
Job No: 1481166

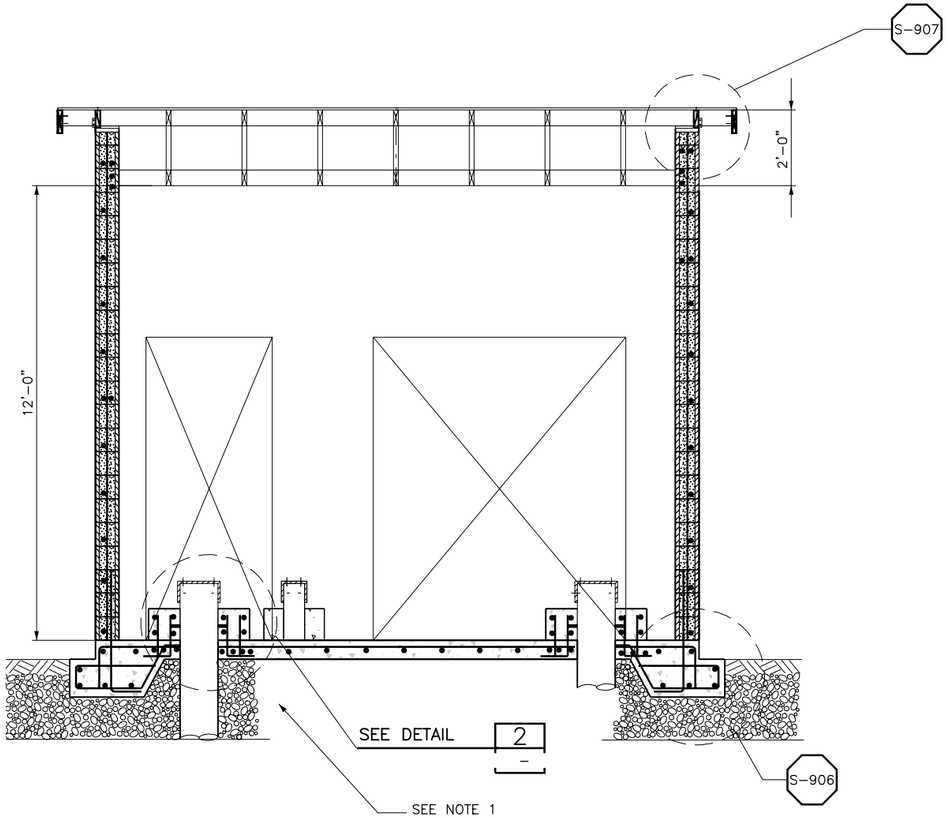

SECTION A
SCALE: 1/2"=1'-0" BC-S-206

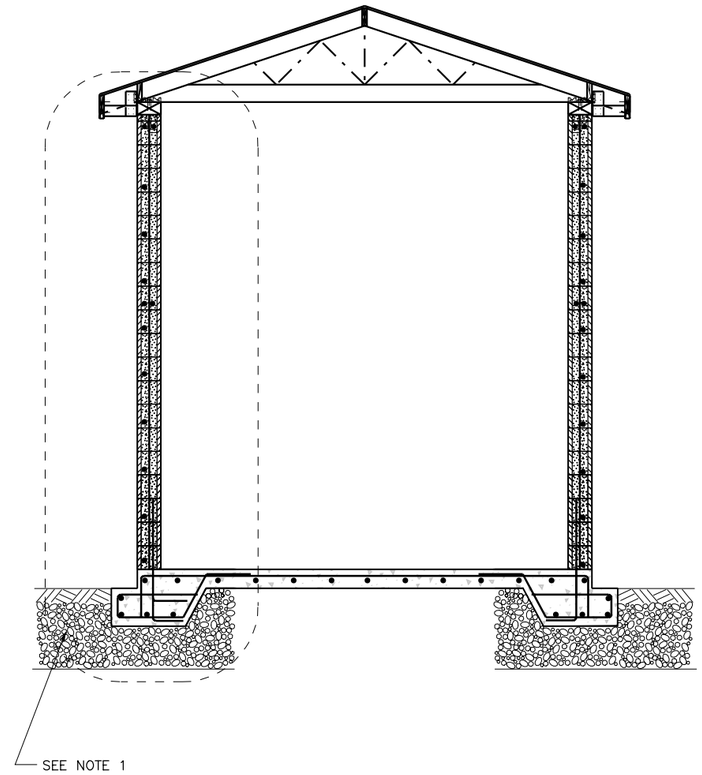

SECTION B
SCALE: 1/2"=1'-0" BC-S-206

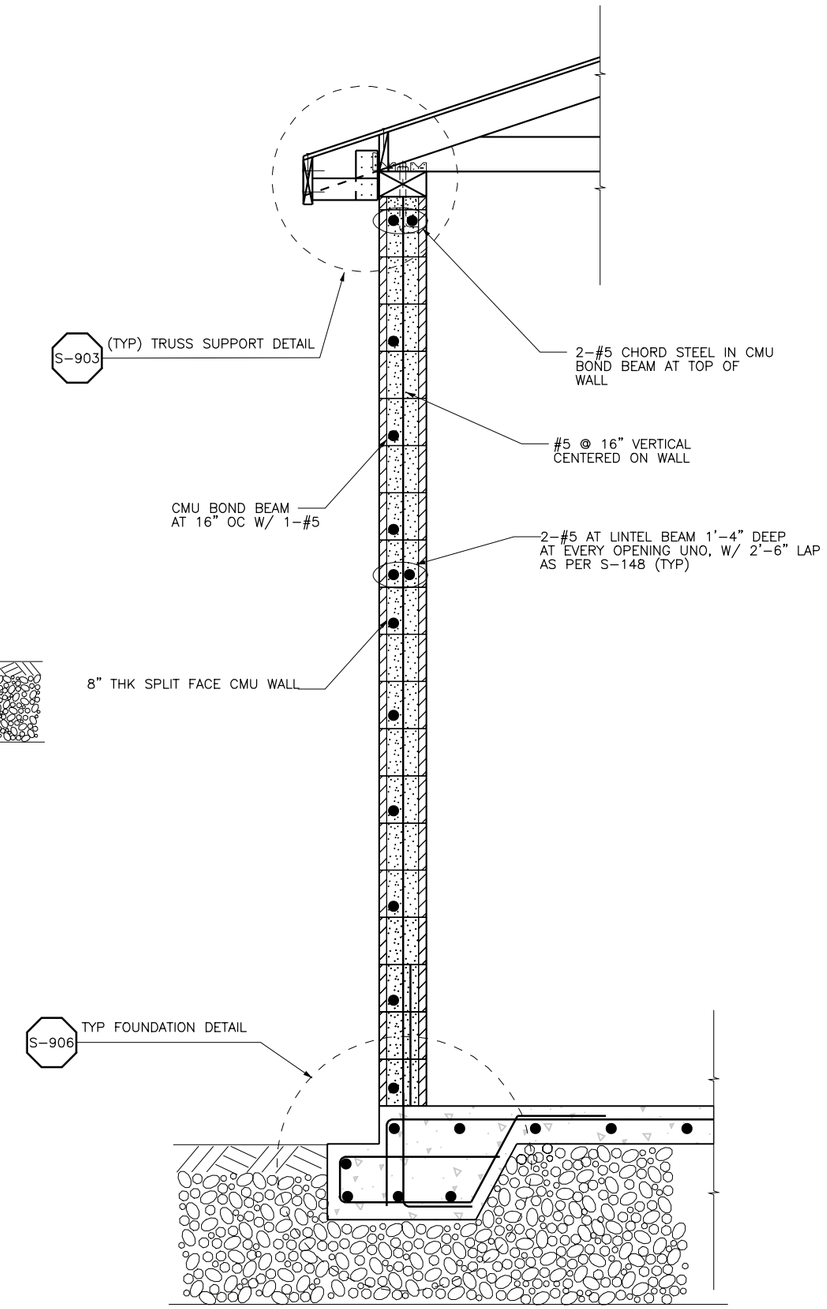

DETAIL 1
SCALE: 1"=1'-0"

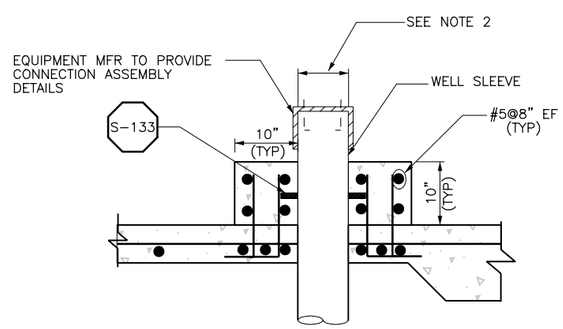

DETAIL 2
SCALE: 1"=1'-0"

NOTE:

1. 1' – 95 % COMPACTED GRANULAR FILL BELOW FOOTING TO EXTEND 5' BEYOND THE EXTERIOR WALL ON ALL SIDES OF BUILDING. PROVIDE GEOTEXTILE PRIOR TO PLACING THE GRANULAR FILL. REFER SPECIFICATIONS.
2. COORDINATE DIMENSION WITH MFR'S SHOP DWGS PRIOR TO ANY FABRICATION AND/OR CONSTRUCTION.

REGISTERED PROFESSIONAL ENGINEER
CRAIG JOHN WILCOX
No. S-3195
Exp. 12-31-05
STRUCTURAL
STATE OF CALIFORNIA

Job No: 1481166 File: N:\Projects\los_osos\Collect_Sys\PS\str\BC-S-207.dgn Plot Date: 09-FEB-2004 15:29

REV	DATE	BY	DESCRIPTION

SCALE: AS SHOWN

WARNING: 0 1/2 1 — IF THIS BAR DOES NOT MEASURE 1" THEN DRAWING IS NOT TO SCALE

DESIGNED S.BATRA
DRAWN S.BATRA
CHECKED C.WILCOX

SUBMITTED BY
JOHN A. BERGEN — C31069 LICENSE NO. — 2/16/2004 DATE
STEVE J. HYLAND — C23892 LICENSE NO. — 2/16/2004 DATE

DIGALERT — DIAL TOLL FREE 1-800-642-2444 AT LEAST TWO DAYS BEFORE YOU DIG — UNDERGROUND SERVICE ALERT OF NORTHERN CALIFORNIA

LOS OSOS COMMUNITY SERVICES DISTRICT

MWH Walnut Creek, California

LOS OSOS WASTEWATER PROJECT
STRUCTURAL
HARVEST WELL BUILDING
SECTION AND DETAILS

SHEET BC-S-207

GENERAL NOTES

A. All dimensions are to the face of framing unless otherwise noted.
B. Contractor to provide sheathing on the interior side of all walls where structural sheathing occurs, to provide a continuous and flush wall surface for the entire wall.
C. All door thresholds to be level from jamb to jamb.
D. All door jambs on hinge side to be 6" from corner of wall unless otherwise noted.
E. Refer to Plumbing Plans for further information.
F. Refer to Civil Plans for further information on adjacent site improvements.
G. Refer to Structural Plans for further information and coordination.
H. Refer to Mechanical Plans for further information on equipment locations and penetrations.

DOOR TYPES

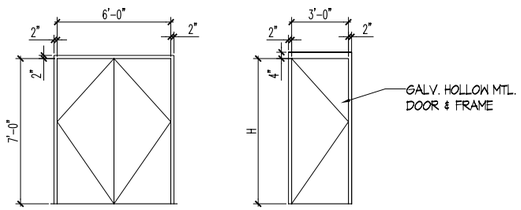

A
HOLLOW METAL

B
HOLLOW METAL

DOOR SCHEDULE

DOOR NO.	DOOR TYPE	RATING	FRAME TYPE	SIZE (WxH)	HDWR GROUP	NOTES
STANDBY POWER BUILDINGS						
P1	A	–	MTL.	(2)3'-0"X8'-0"	HD_GR	–
HARVEST WELLS						
H1	A	–	MTL.	(2)3'-0"X8'-0"	HD_GR	–
H2	B	–	MTL.	3'-0"X8'-0"	HD_GR	–

NOTES:
(1) VERIFY ROUGH OPENING SIZE WITH DOOR MANUFACTURER SPEC. PRIOR TO CONSTRUCTION
(2) DOOR SIZE REFERS TO FINISH OPENING. CONTRACTOR TO VERIFY ACTUAL DOOR SIZE TO FIT FINISH OPENING PRIOR TO FABRICATION OF DOOR & FINISH OPENING

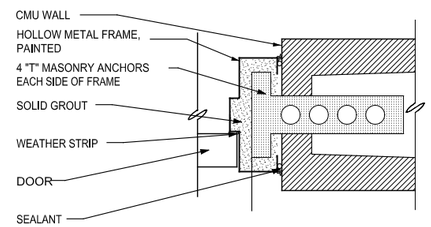

EXTERIOR HOLLOW METAL DOOR – JAMB | 3" | 3

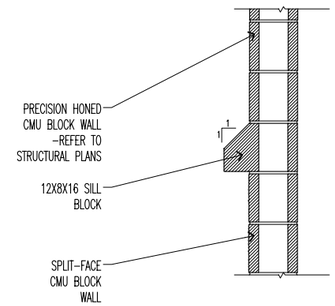

BLOCK DETAIL | 1" | 2

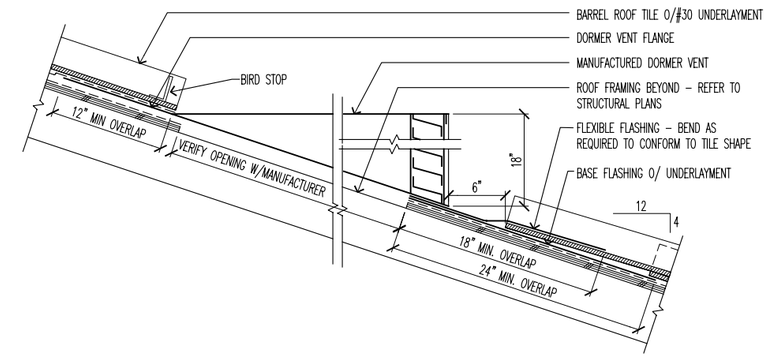

ROOF VENT | 1 1/2" | 1

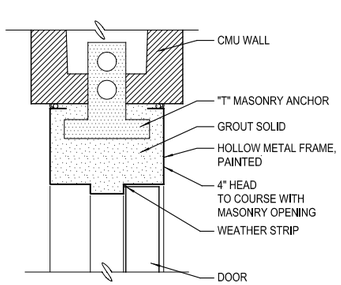

EXTERIOR HOLLOW METAL DOOR – HEAD | 3" | 7

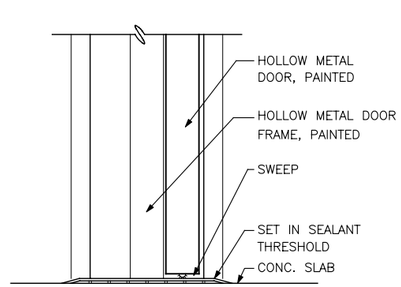

EXTERIOR HOLLOW METAL DOOR | 3" | 6

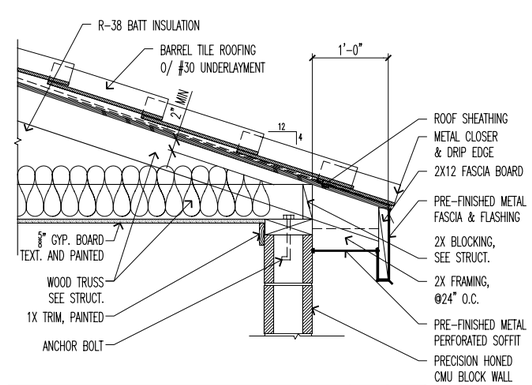

EAVE DETAIL | 1" | 5

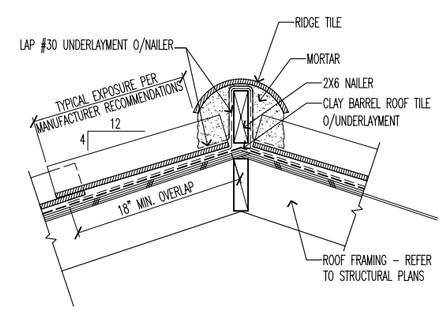

NOTE: FASTEN TILES PER MANUFACTURER RECOMMENDATIONS

RIDGE FLASHING DETAIL | 1 1/2" | 4

Licensed Architect
Kyle L. Harris
License #C-29272
Expires 7/05
State of California

REV	DATE	BY	DESCRIPTION

SCALE: AS LABELED

WARNING: 0 1/2 1 — IF THIS BAR DOES NOT MEASURE 1" THEN DRAWING IS NOT TO SCALE

DESIGNED Kyle Harris
DRAWN Ryan Brockett
CHECKED Kyle Harris

SUBMITTED BY
JOHN A. BERGEN — C31069 LICENSE NO. — 2/16/2004 DATE
STEVE J. HYLAND — C23892 LICENSE NO. — 2/16/2004 DATE

DIGALERT — DIAL TOLL FREE 1-800-642-2444 AT LEAST TWO DAYS BEFORE YOU DIG — UNDERGROUND SERVICE ALERT OF NORTHERN CALIFORNIA

LOS OSOS COMMUNITY SERVICES DISTRICT

MWH Walnut Creek, California

RRM DESIGN GROUP — Creating Environmental Psych Spy — 3765 South Higuera Street, P.O. Box 112 • San Luis Obispo, California 93406 • Phone: (805)781-1011 • Fax: (805)781-1019 • www.rrmdesigngroup.com

LOS OSOS WASTEWATER PROJECT
ARCHITECTURAL
STANDARD ARCHITECTURAL DETAILS

SHEET BC-GA-200 OF

N:\2002\1002008 Los Osos WWTF\Arch\Product\CAD files\PumpStations\100%.dwg, DETAILS BC, Feb 06, 2004 10:18am, SAMartin

DIMENSION TABLE

STANDBY POWER FACILITY	BUILDING DIMENSIONS
LUPINE	25'-4" X 14'-8"
WEST PASO/BAYWOOD	28'-0" X 17'-4"
EAST YSABEL	24'-8" X 14'-8"
EAST PASO	25'-4" X 14'-8"
MOUNTAIN VIEW	25'-4" X 14'-8"
SUNNY OAKS	24'-8" X 14'-8"

SYMBOLS AND LEGENDS

5 / A-8.0 — DETAIL NUMBER / SHEET NUMBER

5 / A-6.1 — SECTION NUMBER / SHEET NUMBER

ROOF VENT 07120 — ITEM DESCRIPTION / SPEC SECTION(S)

GENERAL NOTES

1 Applicable Codes and Standards:

Part 1 2001 California Building Standards Administrative Code, Title 24 C.C.R.
Part 2 2001 California Building Code, Title C.C.R.
(1997 Uniform Building Code Volumes 1-3 of the International Conference of Building Officials, with California Amendments)
Part 3 2001 California Electrical Code, Title 24 C.C.R.
(1999 National Electrical Code of the National Fire Protection Association, NFPA)
Part 4 2001 California Mechanical Code, Title 24 C.C.R.
(2000 Uniform Mechanical Code of the International Association of Plumbing and Mechanical Officials, IAPMO)
Part 5 2001 California Plumbing Code, Title 24 C.C.R.
(2000 Uniform Plumbing Code of the International Association of Plumbing and Mechanical Officials, IAPMO)
Part 6 2001 California Energy Code, Title 24 C.C.R.
Part 7 2001 California Elevator Safety Construction Code, Title 24 C.C.R.
Part 8 2001 California Fire Code, Title 24 C.C.R.
(2000 Uniform Fire Code of the Western Fire Chiefs Association)
Part 10 2001 California Code for Building Conservation, Title 24 C.C.R.
(1997 Uniform Code for Building Conservation of the International Conference of Building Officials, with amendments)
Part 12 2001 California Reference Standards Code, Title 24 C.C.R.

2 All work described in the drawings shall be verified for dimension, grade, extent and compatibility with existing site/building conditions. Any discrepancies and unexpected conditions that affect or change the work described in the contract documents shall be brought to the Architect's attention immediately. Do not proceed with the work in the area of discrepancies until all such discrepancies are resolved. If the contractor chooses to do so, he/she shall be proceeding at his/her own risk.

3 Omissions made in these drawings and specifications or the mis-description of the work which is manifestly necessary to carry out the intent of the drawings and specifications, or which is customarily performed shall not relieve the Contractor from performing such omitted or described details of the work as if fully and completely set forth and described in the drawings and specifications.

4 Dimensions shown shall take precedence over drawing scale or proportion. Larger scale drawings shall take precedence over smaller scale drawings.

5 In the event of the unforeseen encounter of materials suspected to be of an archaeological or paleontological nature, all grading and excavation shall cease in the immediate area and the appropriate authorities are to be notified by the Contractor. The find shall be left untouched until an evaluation by a qualified Archaeologist or Paleontologist is made.

6 Contractor is to be responsible for being familiar with these documents including all contract requirements.

7 Grading plans, drainage improvements, road and access requirements and environmental health considerations shall comply with all local ordinances.

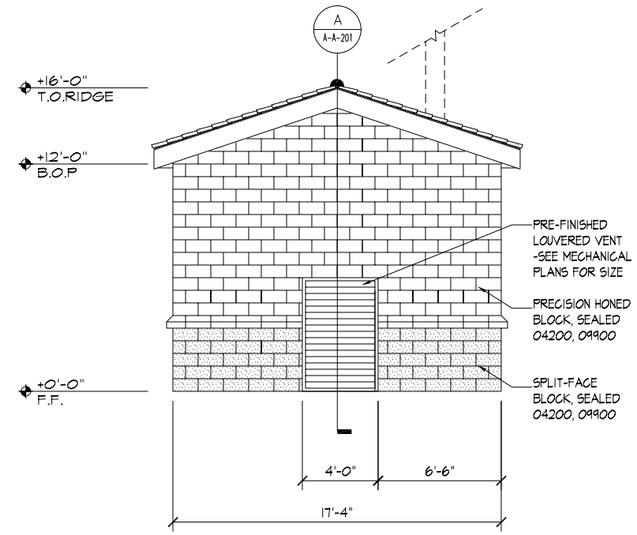

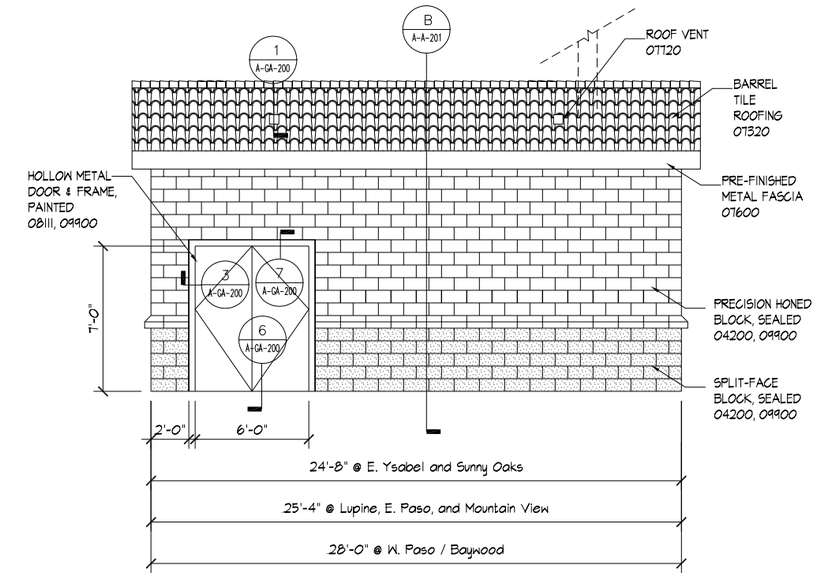

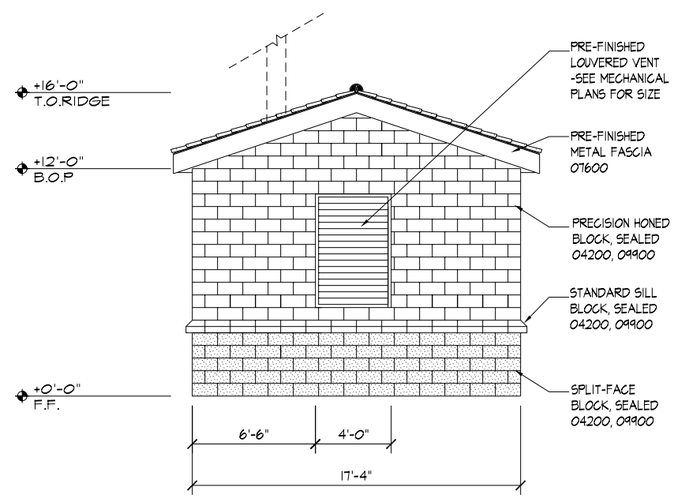

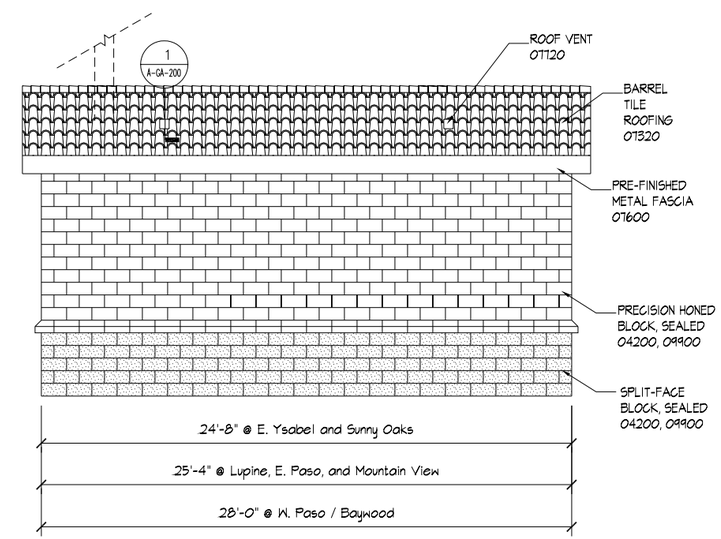

ELEVATIONS

Licensed Architect
Kyle L. Harris
License #C-29272
Expires 7/05
State of California

REV	DATE	BY	DESCRIPTION

SCALE: 1/4" = 1'-0"

WARNING: 0 1/2 1 — IF THIS BAR DOES NOT MEASURE 1" THEN DRAWING IS NOT TO SCALE

DESIGNED Kyle Harris
DRAWN Ryan Brockett
CHECKED Kyle Harris

SUBMITTED BY
JOHN A. BERGEN — C31069 LICENSE NO. — 2/16/2004 DATE
STEVE J. HYLAND — C23892 LICENSE NO. — 2/16/2004 DATE

DIGALERT — DIAL TOLL FREE 1-800-642-2444 AT LEAST TWO DAYS BEFORE YOU DIG — UNDERGROUND SERVICE ALERT OF NORTHERN CALIFORNIA

LOS OSOS COMMUNITY SERVICES DISTRICT

MWH Walnut Creek, California

RRM DESIGN GROUP — Creating Environments People Enjoy — 3765 South Higuera Street, Suite 102 • San Luis Obispo, California 93401 — Phone: 805/543-1794 • Fax: 805/543-4609 • email@rrmdesign.com — An Employee Owned Firm Since 1979. 25% of RRM's Profits Are Donated to Charity

LOS OSOS WASTEWATER PROJECT
ARCHITECTURAL
STANDBY POWER BUILDINGS
ELEVATIONS

SHEET B-A-200 OF

N:\2002\1002008 Los Osos WWTF\Arch\Product\CAD files\PumpStations\100%.dwg, ELEVATIONS B - SP, Feb 06, 2004 10:18am, SAMartin

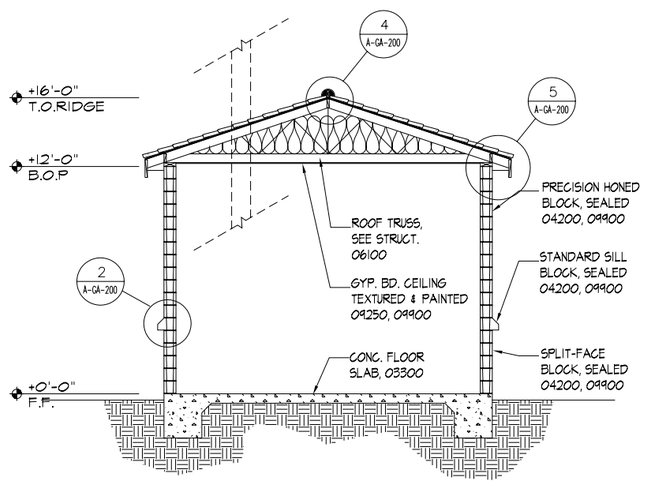

SECTION A

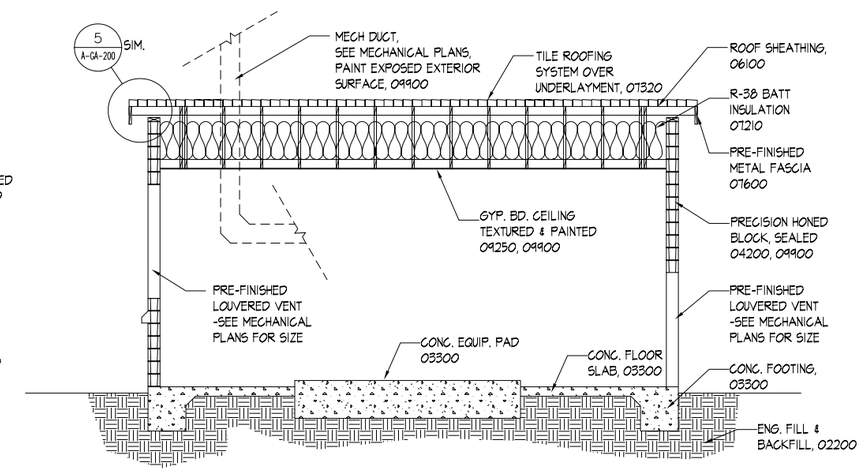

SECTION B

Licensed Architect
Kyle L. Harris
License #C-29272
Expires 7/05
State of California

N:\2002\1002008 Los Osos WWTF\Arch\Product\CAD files\PumpStations\100%.dwg, SECTIONS B - SP, Feb 06, 2004 10:19am, SAMartin

REV	DATE	BY	DESCRIPTION

SCALE: 1/4" = 1'-0"

WARNING: 0 1/2 1 — IF THIS BAR DOES NOT MEASURE 1" THEN DRAWING IS NOT TO SCALE

DESIGNED Kyle Harris
DRAWN Ryan Brockett
CHECKED Kyle Harris

SUBMITTED BY
JOHN A. BERGEN — C31069 LICENSE NO. — 2/16/2004 DATE
STEVE J. HYLAND — C23892 LICENSE NO. — 2/16/2004 DATE

DIGALERT — DIAL TOLL FREE 1-800-642-2444 AT LEAST TWO DAYS BEFORE YOU DIG — UNDERGROUND SERVICE ALERT OF NORTHERN CALIFORNIA

LOS OSOS COMMUNITY SERVICES DISTRICT

MWH Walnut Creek, California

RRM DESIGN GROUP — Creating Environments People Enjoy — 3765 South Higuera Street, Suite 102 • San Luis Obispo, California 93401 — Phone: 805/543-1794 • Fax: 805/543-1803 • eml: rrm@rrmdg.com — An Employee Owned Corporation Also in Denver, CO (303) 21-0191 • San Francisco, California (415) 956-1220

LOS OSOS WASTEWATER PROJECT
ARCHITECTURAL
STANDBY POWER BUILDINGS
SECTIONS

SHEET B-A-201 OF

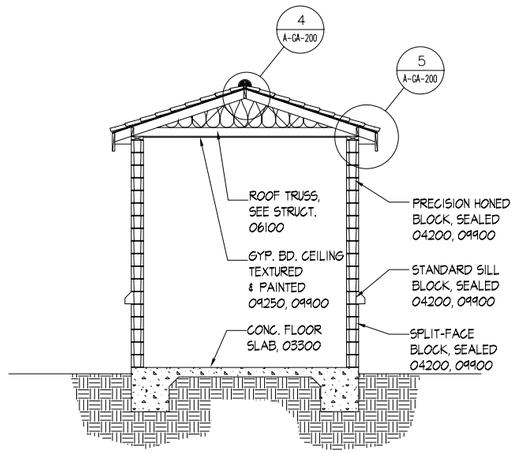

SECTION A

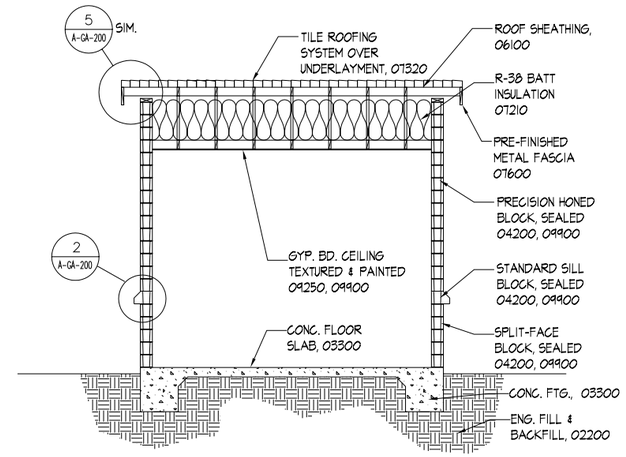

SECTION B

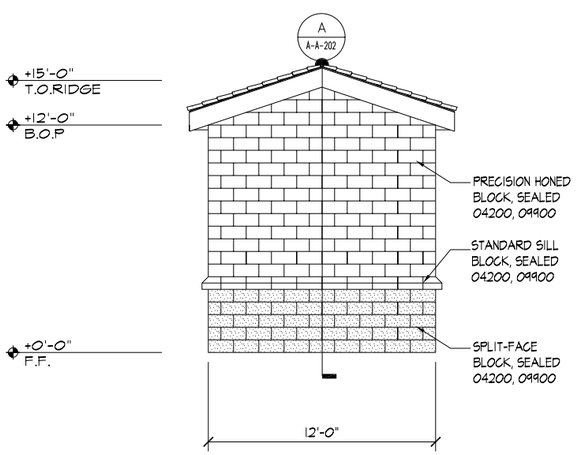

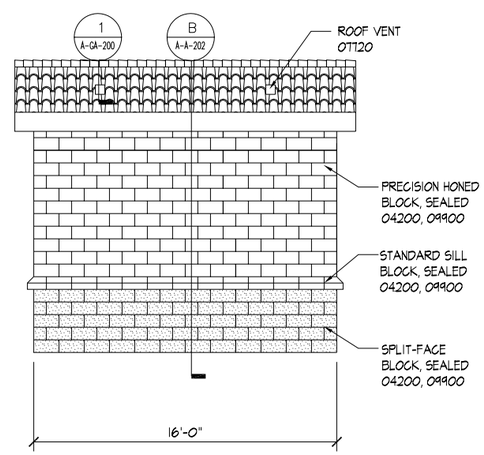

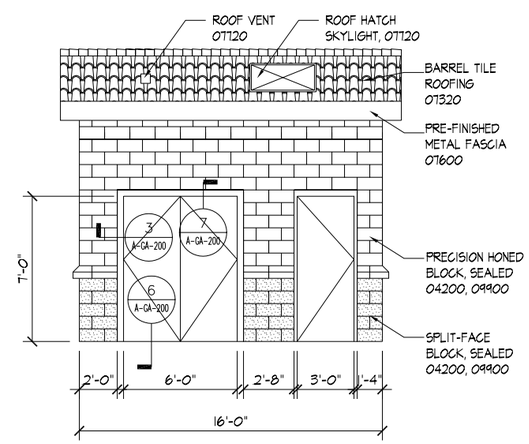

ELEVATIONS

Licensed Architect
Kyle L. Harris
License #C-29272
Expires 7/05
State of California

REV	DATE	BY	DESCRIPTION

SCALE: 1/4" = 1'-0"

WARNING: 0 1/2 1 — IF THIS BAR DOES NOT MEASURE 1" THEN DRAWING IS NOT TO SCALE

DESIGNED Kyle Harris
DRAWN Ryan Brockett
CHECKED Kyle Harris

SUBMITTED BY
JOHN A. BERGEN — C31069 LICENSE NO. — 2/16/2004 DATE
STEVE J. HYLAND — C23892 LICENSE NO. — 2/16/2004 DATE

DIGALERT — DIAL TOLL FREE 1-800-642-2444 AT LEAST TWO DAYS BEFORE YOU DIG — UNDERGROUND SERVICE ALERT OF NORTHERN CALIFORNIA

LOS OSOS COMMUNITY SERVICES DISTRICT

MWH Walnut Creek, California

RRM DESIGN GROUP — Creating Environmental Physical Design — 3765 South Higuera Street, Suite 102 • San Luis Obispo, California 93401 — Phone: 805/543-1794 • Fax: 805/543-467 • www.rrmdesign.com — In Company, Inc. of 1980 • Inc. Illinois, 1981 (800) 25 1979 • of Texas, Louisiana, Nevada, Ohio

LOS OSOS WASTEWATER PROJECT
ARCHITECTURAL
HARVEST WELLS
ELEVATIONS AND SECTIONS

SHEET B-A-202 OF

N:\2002\1002008 Los Osos WWTF\Arch\Product\CAD files\PumpStations\100%.dwg, ELEVATIONS B -HW, Feb 06, 2004 10:18am, SAMartin

DIMENSION TABLE

STANDBY POWER FACILITY	BUILDING DIMENSIONS
LUPINE	25'-4" X 14'-8"
WEST PASO/BAYWOOD	28'-0" X 17'-4"
EAST YSABEL	24'-8" X 14'-8"
EAST PASO	25'-4" X 14'-8"
MOUNTAIN VIEW	25'-4" X 14'-8"
SUNNY OAKS	24'-8" X 14'-8"

SYMBOLS AND LEGENDS

5 / A-8.0 — DETAIL NUMBER / SHEET NUMBER

5 / A-6.1 — SECTION NUMBER / SHEET NUMBER

ROOF VENT 07120 — ITEM DESCRIPTION / SPEC SECTION(S)

GENERAL NOTES

1 Applicable Codes and Standards:

Part 1 2001 California Building Standards Administrative Code, Title 24 C.C.R.
Part 2 2001 California Building Code, Title C.C.R.
(1997 Uniform Building Code Volumes 1-3 of the International Conference of Building Officials, with California Amendments)
Part 3 2001 California Electrical Code, Title 24 C.C.R.
(1999 National Electrical Code of the National Fire Protection Association, NFPA)
Part 4 2001 California Mechanical Code, Title 24 C.C.R.
(2000 Uniform Mechanical Code of the International Association of Plumbing and Mechanical Officials, IAPMO)
Part 5 2001 California Plumbing Code, Title 24 C.C.R.
(2000 Uniform Plumbing Code of the International Association of Plumbing and Mechanical Officials, IAPMO)
Part 6 2001 California Energy Code, Title 24 C.C.R.
Part 7 2001 California Elevator Safety Construction Code, Title 24 C.C.R.
Part 8 2001 California Fire Code, Title 24 C.C.R.
(2000 Uniform Fire Code of the Western Fire Chiefs Association)
Part 10 2001 California Code for Building Conservation, Title 24 C.C.R.
(1997 Uniform Code for Building Conservation of the International Conference of Building Officials, with amendments)
Part 12 2001 California Reference Standards Code, Title 24 C.C.R.

2 All work described in the drawings shall be verified for dimension, grade, extent and compatibility with existing site/building conditions. Any discrepancies and unexpected conditions that affect or change the work described in the contract documents shall be brought to the Architect's attention immediately. Do not proceed with the work in the area of discrepancies until all such discrepancies are resolved. If the contractor chooses to do so, he/she shall be proceeding at his/her own risk.

3 Omissions made in these drawings and specifications or the mis-description of the work which is manifestly necessary to carry out the intent of the drawings and specifications, or which is customarily performed shall not relieve the Contractor from performing such omitted or described details of the work as if fully and completely set forth and described in the drawings and specifications.

4 Dimensions shown shall take precedence over drawing scale or proportion. Larger scale drawings shall take precedence over smaller scale drawings.

5 In the event of the unforeseen encounter of materials suspected to be of an archaeological or paleontological nature, all grading and excavation shall cease in the immediate area and the appropriate authorities are to be notified by the Contractor. The find shall be left untouched until an evaluation by a qualified Archaeologist or Paleontologist is made.

6 Contractor is to be responsible for being familiar with these documents including all contract requirements.

7 Grading plans, drainage improvements, road and access requirements and environmental health considerations shall comply with all local ordinances.

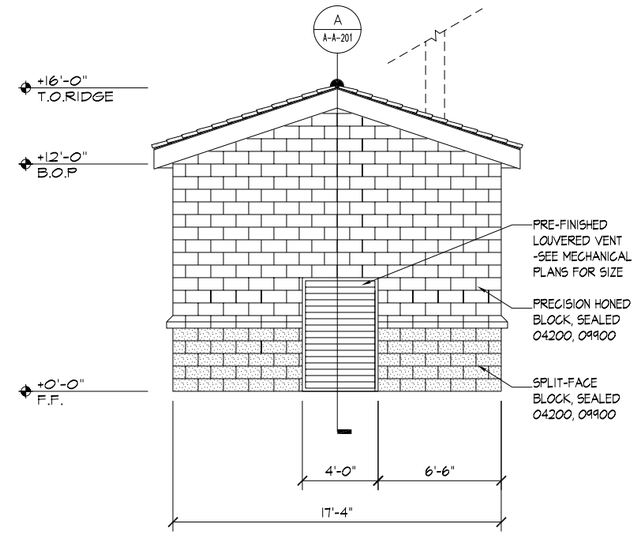

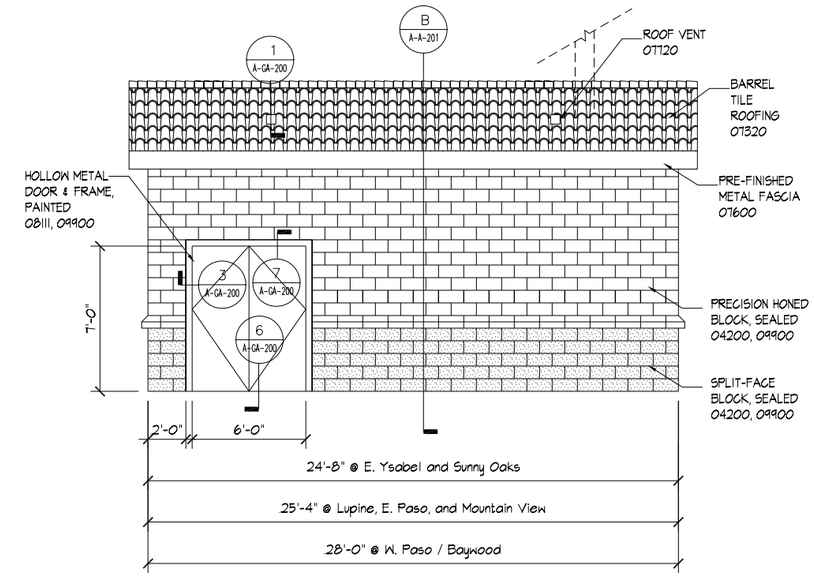

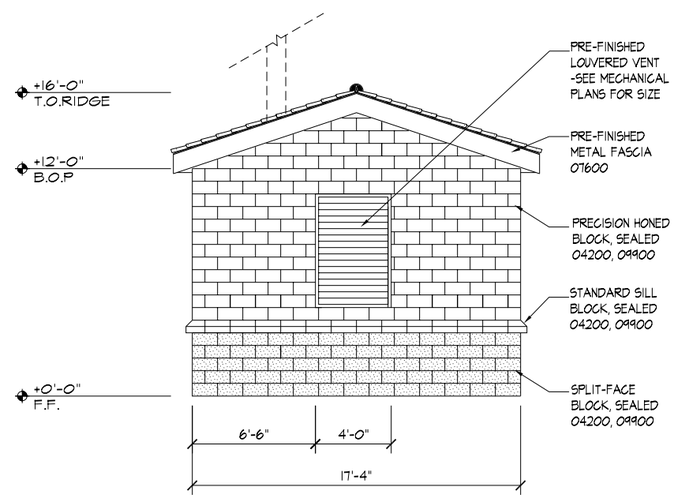

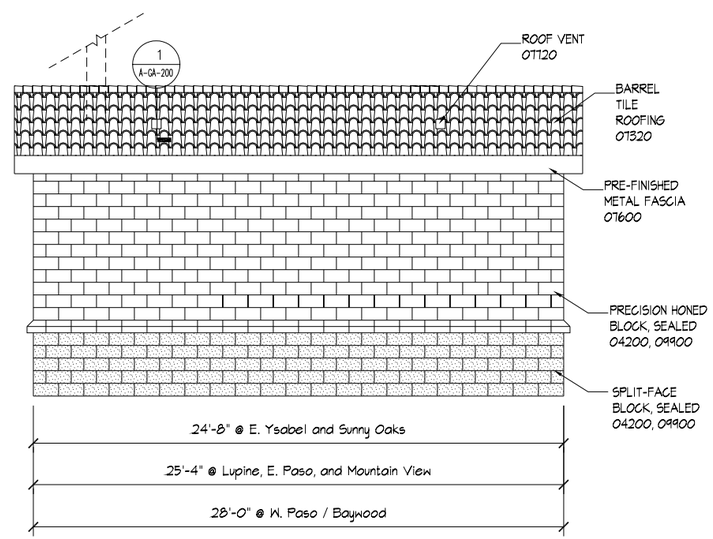

ELEVATIONS

Licensed Architect
Kyle L. Harris
License #C-29272
Expires 7/05
State of California

REV	DATE	BY	DESCRIPTION

SCALE: 1/4" = 1'-0"

WARNING: 0 1/2 1 — IF THIS BAR DOES NOT MEASURE 1" THEN DRAWING IS NOT TO SCALE

DESIGNED Kyle Harris
DRAWN Ryan Brocket
CHECKED Kyle Harris

SUBMITTED BY
JOHN A. BERGEN — C31069 LICENSE NO. — 2/16/2004 DATE
STEVE J. HYLAND — C23892 LICENSE NO. — 2/16/2004 DATE

DIGALERT — DIAL TOLL FREE 1-800-642-2444 AT LEAST TWO DAYS BEFORE YOU DIG — UNDERGROUND SERVICE ALERT OF NORTHERN CALIFORNIA

LOS OSOS COMMUNITY SERVICES DISTRICT

MWH Walnut Creek, California

RRM DESIGN GROUP — Creating Environments People Enjoy — 3765 South Higuera Street, Suite 102 • San Luis Obispo, California 93401 — Phone: 805/543-1794 • Fax: 805/543-4609 • email@rrmdesign.com — All Religious Institut Of 1984 ccc Blanc, Inc. 2000, a DBA of Jones, Jackson Arthur Inc

LOS OSOS WASTEWATER PROJECT
ARCHITECTURAL
STANDBY POWER BUILDINGS
ELEVATIONS

SHEET C-A-200 OF

N:\2002\1002008 Los Osos WWTF\Arch\Product\CAD files\PumpStations\100%.dwg, ELEVATIONS C - SP, Feb 06, 2004 10:18am, SAMartin

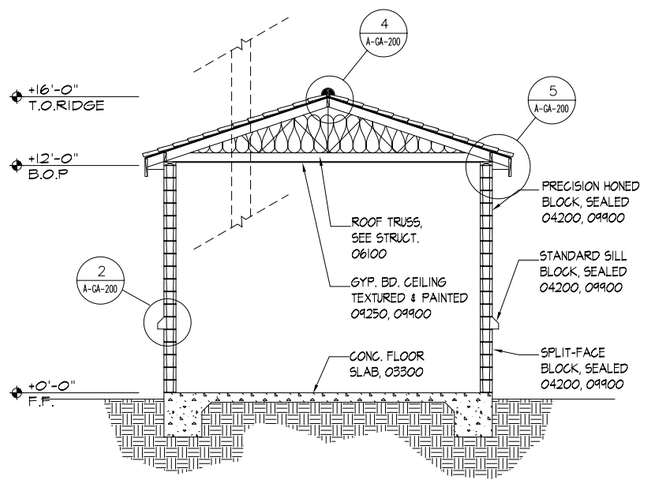

SECTION A

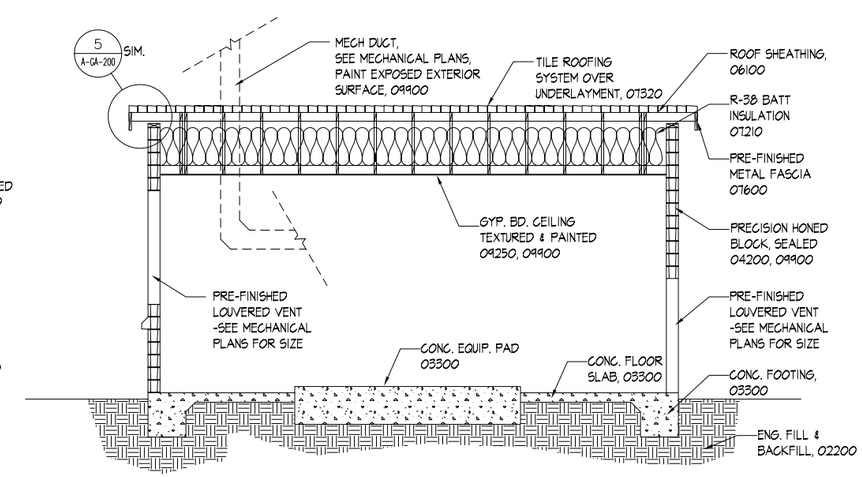

SECTION B

Licensed Architect
Kyle L. Harris
License #C-29272
Expires 7/05
State of California

N:\2002\1002008 Los Osos WWTF\Arch\Product\CAD files\PumpStations\100%.dwg, SECTIONS C - SP, Feb 06, 2004 10:19am, SAMartin

REV	DATE	BY	DESCRIPTION

SCALE: 1/4" = 1'-0"

WARNING: 0 1/2 1 — IF THIS BAR DOES NOT MEASURE 1" THEN DRAWING IS NOT TO SCALE

DESIGNED Kyle Harris
DRAWN Ryan Brockett
CHECKED Kyle Harris

SUBMITTED BY
JOHN A. BERGEN — C31069 LICENSE NO. — 2/16/2004 DATE
STEVE J. HYLAND — C23892 LICENSE NO. — 2/16/2004 DATE

DIGALERT — DIAL TOLL FREE 1-800-642-2444 AT LEAST TWO DAYS BEFORE YOU DIG — UNDERGROUND SERVICE ALERT OF NORTHERN CALIFORNIA

LOS OSOS COMMUNITY SERVICES DISTRICT

MWH Walnut Creek, California

RRM DESIGN GROUP — Creating Environments People Enjoy — 3765 South Higuera Street, Suite 102 • San Luis Obispo, California 93401 — Phone: 805/543-1794 • Fax: 805/543-1803 • eMail: rrm@rrmdesign.com — An Employee Owned Corporation • Offices in San Diego, Palm Desert, and Lake Tahoe, California, Portland, Oregon

LOS OSOS WASTEWATER PROJECT
ARCHITECTURAL
STANDBY POWER BUILDINGS
SECTIONS

SHEET C-A-201 OF

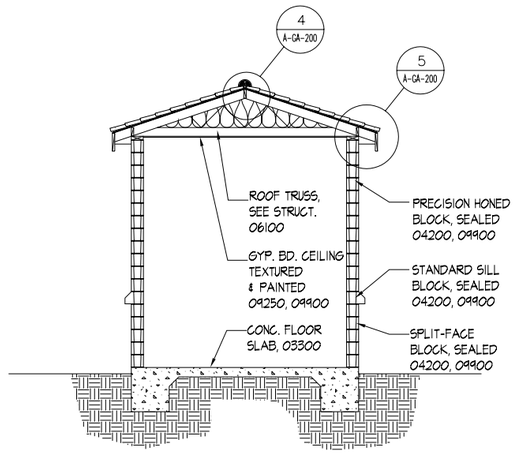

SECTION A

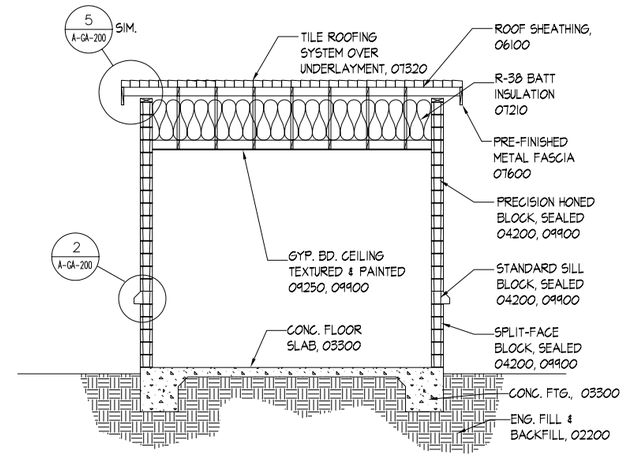

SECTION B

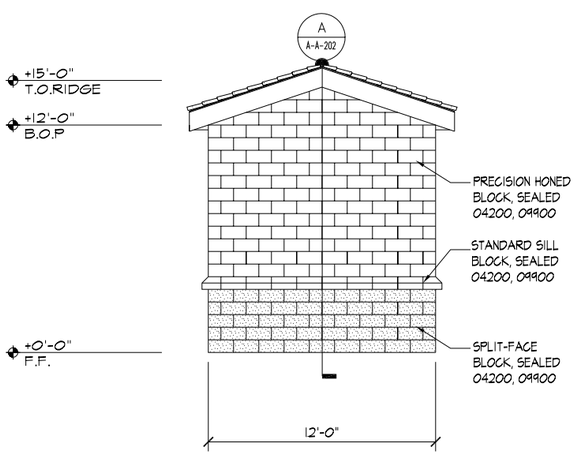

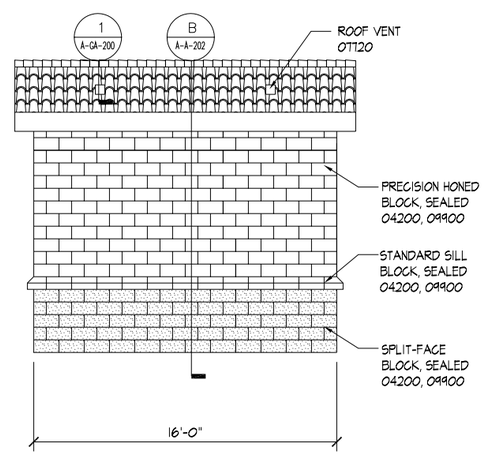

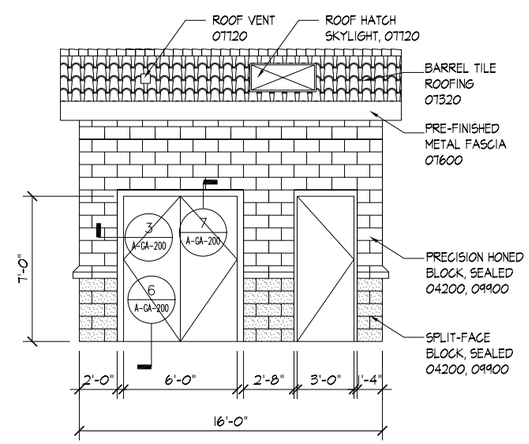

ELEVATIONS

Licensed Architect
Kyle L. Harris
License #C-29272
Expires 7/05
State of California

REV	DATE	BY	DESCRIPTION

SCALE: 1/4" = 1'-0"

WARNING: 0 1/2 1 — IF THIS BAR DOES NOT MEASURE 1" THEN DRAWING IS NOT TO SCALE

DESIGNED Kyle Harris
DRAWN Ryan Brockett
CHECKED Kyle Harris

SUBMITTED BY
JOHN A. BERGEN — C31069 LICENSE NO. — 2/16/2004 DATE
STEVE J. HYLAND — C23892 LICENSE NO. — 2/16/2004 DATE

DIGALERT — DIAL TOLL FREE 1-800-642-2444 AT LEAST TWO DAYS BEFORE YOU DIG — UNDERGROUND SERVICE ALERT OF NORTHERN CALIFORNIA

LOS OSOS COMMUNITY SERVICES DISTRICT

MWH Walnut Creek, California

RRM DESIGN GROUP — Creating Environmental Physical Design — 3765 South Higuera Street, Suite 102 • San Luis Obispo, California 93401 — Phone: 805/543-1794 • Fax: 805/543-4609 • www.rrmdesign.com — In Company, Inc. of 1980 • Inc. Illinois, 1st 2000, in 1977 • of Tulsa, Lombard, Hartford, Del.

LOS OSOS WASTEWATER PROJECT
ARCHITECTURAL
HARVEST WELLS
ELEVATIONS AND SECTIONS

SHEET C-A-202 OF

N:\2002\1002008 Los Osos WWTF\Arch\Product\CAD files\PumpStations\100%.dwg, ELEVATIONS C -HW, Feb 06, 2004 10:19am, SAMartin

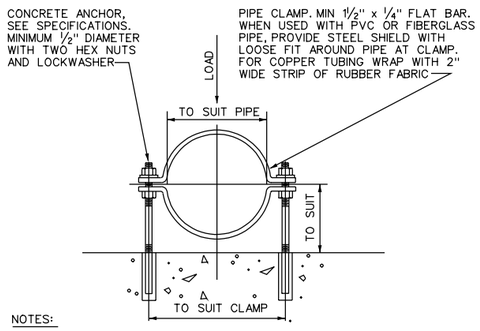

NOTES:

1. GALVANIZE ALL PARTS AFTER FABRICATION. WHERE SUBMERGED, PIPE CLAMP, NUTS, LOCKWASHERS, ANCHORS AND SHIELDS TO BE TYPE 316 STAINLESS STEEL
2. THIS PIPE CLAMP IS LIMITED TO PIPES UP TO 4" DIAMETER INCLUSIVE
3. FOR ADDITIONAL REQUIREMENTS SEE SPECIFICATIONS SECTION 'PIPE SUPPORTS'

PIPE CLAMP

(FOR PIPE 4" DIAMETER AND SMALLER) REV 042202 M-101

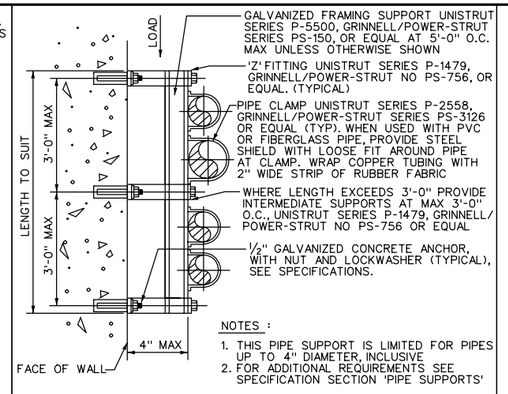

NOTES :

1. THIS PIPE SUPPORT IS LIMITED FOR PIPES UP TO 4" DIAMETER, INCLUSIVE
2. FOR ADDITIONAL REQUIREMENTS SEE SPECIFICATION SECTION 'PIPE SUPPORTS'

EXTENDED PIPE SUPPORT

(FOR PIPE 4" DIAMETER AND SMALLER) REV 042202 M-103

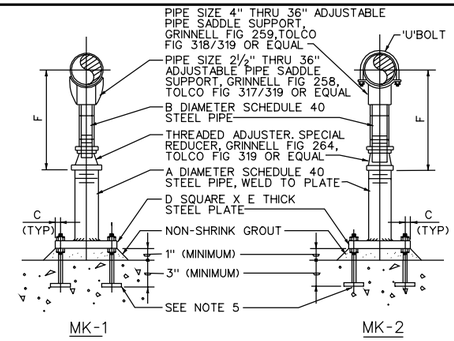

NOTES:

1. FOR ADDITIONAL REQUIREMENTS SEE SPEC SECTION 'PIPE SUPPORTS'.
2. GALVANIZE ALL PARTS AFTER FABRICATION.
3. WHERE PIPE SUPPORT OCCURS ON GRADE REFER TO STRUCTURAL DRAWINGS FOR DETAILS.
4. THIS PIPE SUPPORT IS LIMITED TO PIPE FROM 2 1/2" DIAMETER TO 36" DIAMETER INCLUSIVE.
5. GALVANIZED ANCHOR BOLT OR CONCRETE ANCHOR WITH TWO NUTS AND ONE LOCKWASHER. PROVIDE BAR 4 X 1/2 X 4" WELDED TO BOLT. (TYP OF 4) SEE SPECIFICATIONS.

DIMENSIONS IN INCHES							
NOMINAL PIPE SIZE	A	B	C	D	E	F (APPROX) (MINIMUM)	F (APPROX) (MAXIMUM)
2 1/2	2	1 1/2	1	6	3/8	7	11 1/2
3	2	1 1/2	1	6	3/8	7 5/16	11 13/16
3 1/2	2	1 1/2	1	6	3/8	7 9/16	12 1/16
4	3	*2 1/2/3	1 1/8	7 1/2	1/2	10 1/4	14 3/4
6	3	*2 1/2/3	1 1/8	7 1/2	1/2	11 9/16	16 1/16
8	3	*2 1/2/3	1 1/8	7 1/2	1/2	13 9/16	18 1/16
10	3	*2 1/2/3	1 1/8	7 1/2	1/2	14 5/8	19 1/8
12	3	*2 1/2/3	1 1/8	7 1/2	1/2	15 5/8	20 1/8
14	4	3	1 1/4	9	5/8	18 7/8	23 3/8
16	4	3	1 1/4	9	5/8	19 7/8	24 3/8
18	6	4	1 1/2	11	3/4	22 1/4	26 3/4
20	6	4	1 1/2	11	3/4	23 1/4	27 3/4
24	6	4	1 1/2	11	3/4	26 1/2	31
30	6	4	1 1/2	11	3/4	29 5/8	34 1/8
32	6	4	1 1/2	11	3/4	30 5/8	35 1/8
36	6	4	1 1/2	11	3/4	32 5/8	37 1/8

* SEE MANUFACTURER

ADJUSTABLE PIPE SUPPORT WITH OR WITHOUT 'U' BOLT

(FOR PIPE 36" DIAMETER AND SMALLER) REV 011402 M-108

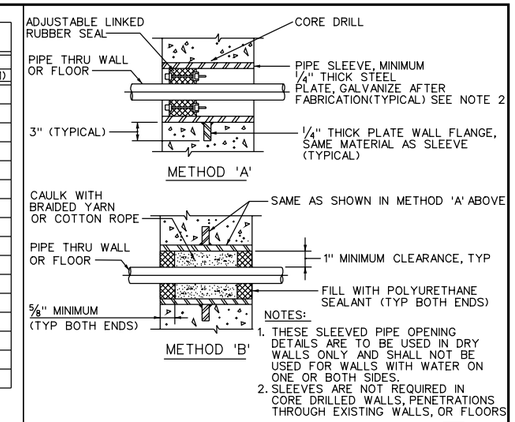

NOTES:

1. THESE SLEEVED PIPE OPENING DETAILS ARE TO BE USED IN DRY WALLS ONLY AND SHALL NOT BE USED FOR WALLS WITH WATER ON ONE OR BOTH SIDES.
2. SLEEVES ARE NOT REQUIRED IN CORE DRILLED WALLS, PENETRATIONS THROUGH EXISTING WALLS, OR FLOORS

SLEEVED PIPE OPENING

M-111

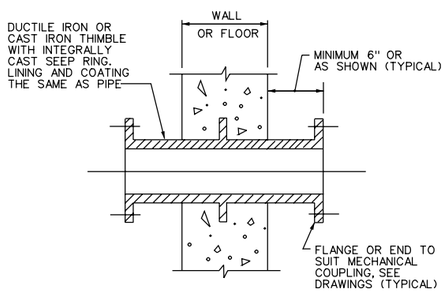

FLANGED OR GROOVED DUCTILE IRON OR CAST IRON PIPE THIMBLE

REV 061101 M-116

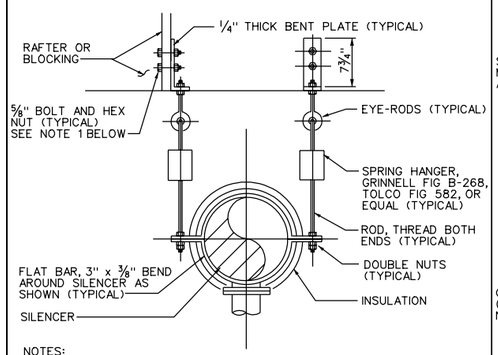

NOTES:

1. EXPANSION TYPE BOLTS ARE NOT ALLOWED
2. FOR ADDITIONAL REQUIREMENTS SEE SPECIFICATION 'PIPE SUPPORTS'

SILENCER SUPPORT

REV 061401 M-149

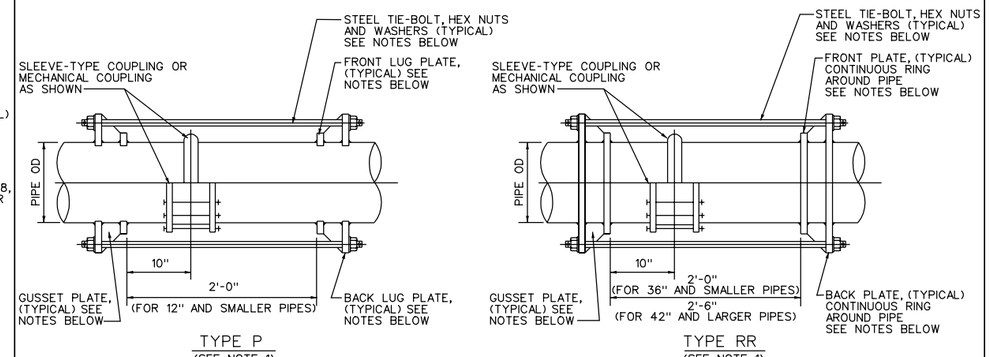

NOTES:

1. SEE AWWA MANUAL M-11 FOR HARNESS SET SIZE, TYPE AND DESIGN REQUIREMENTS.
2. WHERE BURIED TIE-BOLTS, HEX NUTS AND WASHERS SHALL BE TYPE 316 STAINLESS STEEL.

HARNESSED JOINT

REV 042502 M-156

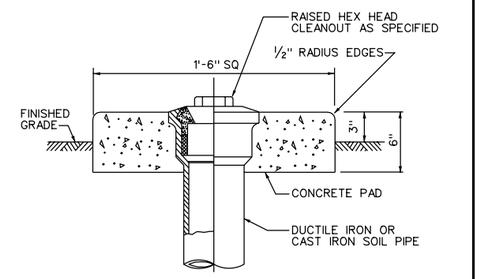

NOTE:

IN TRAFFIC AREAS PROVIDE FLUSH FINISH WITH 10" ID CAST IRON COVER AND FRAME AS SPECIFIED.

CLEANOUT TO GRADE

REV 011602 M-306

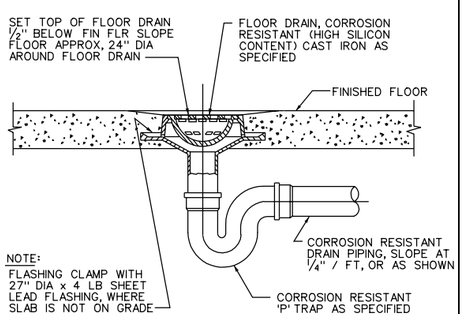

NOTE:

FLASHING CLAMP WITH 27" DIA x 4 LB SHEET LEAD FLASHING, WHERE SLAB IS NOT ON GRADE

CORROSION RESISTANT FLOOR DRAIN

REV 061101 M-310

REGISTERED PROFESSIONAL ENGINEER JACK OSBORN No. M3117 Exp. 12-31-05 MECHANICAL STATE OF CALIFORNIA

REV	DATE	BY	DESCRIPTION

SCALE: NTS

WARNING: 0 1/2 1 — IF THIS BAR DOES NOT MEASURE 1" THEN DRAWING IS NOT TO SCALE

DESIGNED J. OSBORN
DRAWN B. STOLL
CHECKED R. GONZALEZ

SUBMITTED BY
JOHN A. BERGEN — C31069 LICENSE NO. — 2/16/2004 DATE
STEVE J. HYLAND — C23892 LICENSE NO. — 2/16/2004 DATE

DIGALERT — DIAL TOLL FREE 1-800-642-2444 AT LEAST TWO DAYS BEFORE YOU DIG — UNDERGROUND SERVICE ALERT OF NORTHERN CALIFORNIA

LOS OSOS COMMUNITY SERVICES DISTRICT

MWH Walnut Creek, California

LOS OSOS WASTEWATER PROJECT
MECHANICAL
STANDARD DETAILS – 1

SHEET BC-GM-200

Plot Date: 09-FEB-2004 17:20
File: N:\Projects\los_osos\Collect_Sys\PS\mec\BC-GM-200.dgn
Job No: 1481166

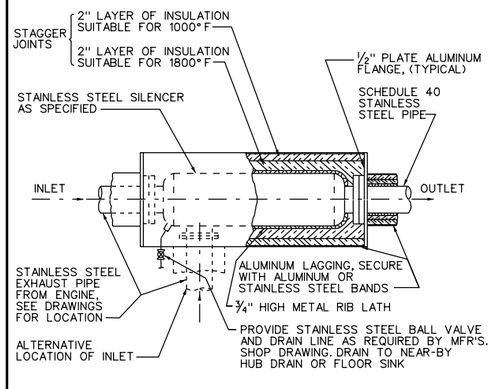

ENGINE SILENCER ASSEMBLY

REV 061401 M-401

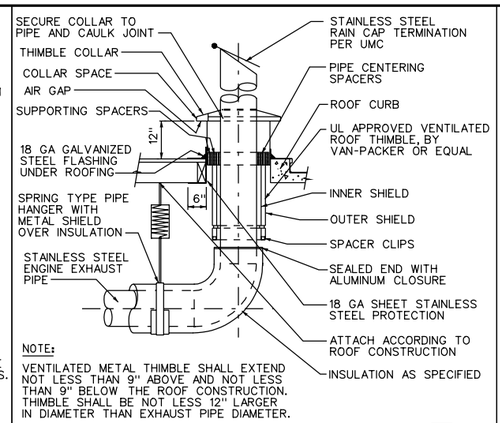

NOTE:

VENTILATED METAL THIMBLE SHALL EXTEND NOT LESS THAN 9" ABOVE AND NOT LESS THAN 9" BELOW THE ROOF CONSTRUCTION. THIMBLE SHALL BE NOT LESS 12" LARGER IN DIAMETER THAN EXHAUST PIPE DIAMETER.

ENGINE EXHAUST THROUGH ROOF

REV 061401 M-414

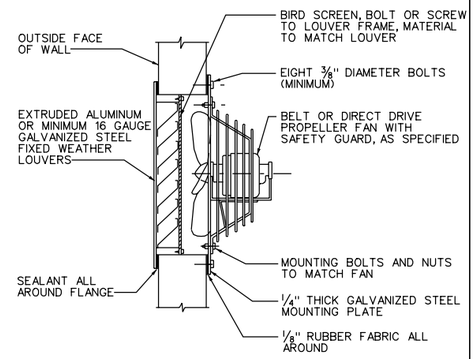

FAN WITH FIXED LOUVER

REV 061101 M-505

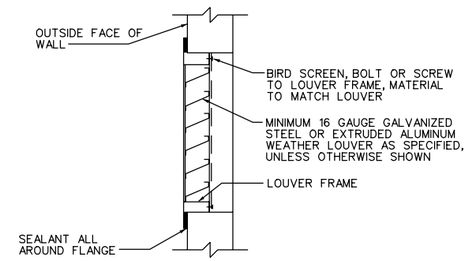

FIXED WEATHER LOUVER

REV 061101 M-507

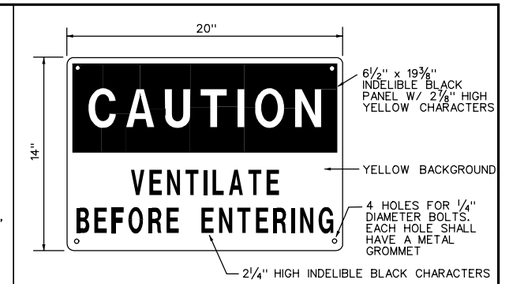

NOTES:

1. WARNING SIGN TO BE ABLE TO BEND TO A 9" RADIUS.
2. MATERIAL TO BE 0.060" THICK BUTYRATE OR EQUAL.
3. SIGN TO BE ATTACHED IN CONSPICUOUS LOCATION AT ENTRY OF STRUCTURE.

VENTILATION WARNING SIGN

REV 062801 M-509

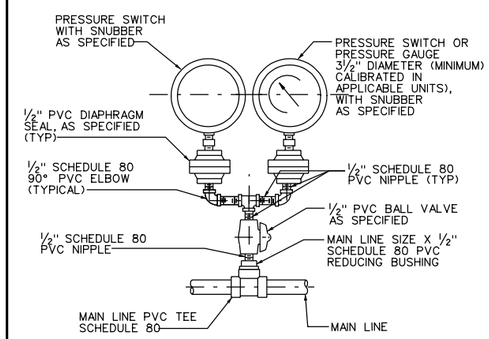

PRESSURE GAUGE OR PRESSURE SWITCH WITH PVC DIAPHRAGM SEAL ON PVC PIPE

REV 061801 M-618

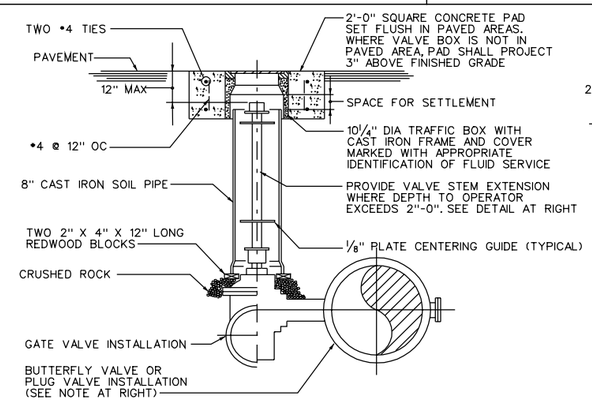

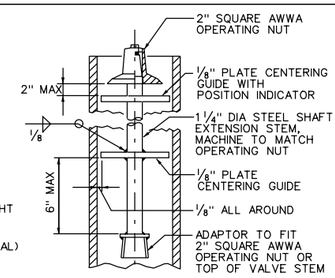

VALVE STEM EXTENSION

NOTE :

FOR LUBRICATED PLUG VALVE, EXTEND LUBRICATION LINE TO GRADE PER MANUFACTURERS INSTRUCTIONS

BURIED VALVE

REV 061801 M-803

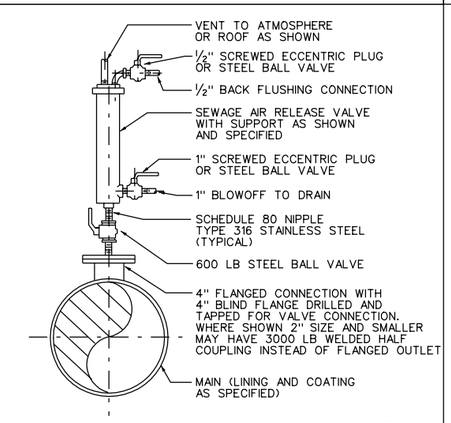

SEWAGE AIR RELEASE VALVE

REV 061101 M-806

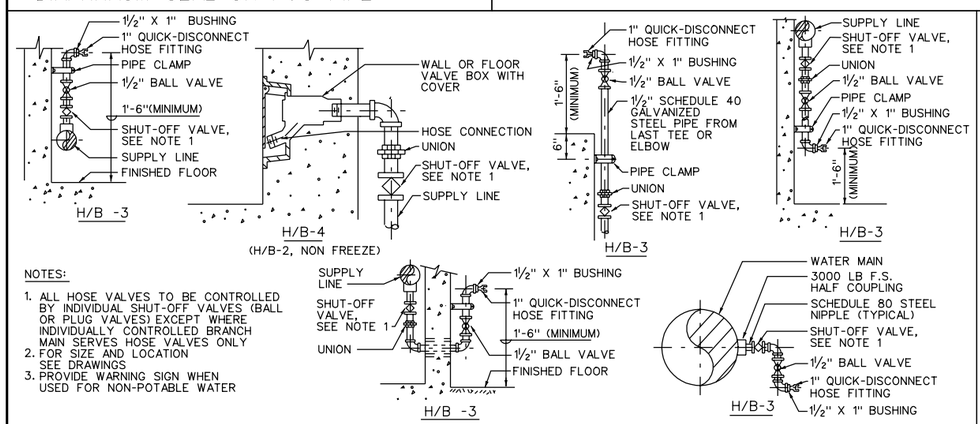

NOTES:

1. ALL HOSE VALVES TO BE CONTROLLED BY INDIVIDUAL SHUT-OFF VALVES (BALL OR PLUG VALVES) EXCEPT WHERE INDIVIDUALLY CONTROLLED BRANCH MAIN SERVES HOSE VALVES ONLY
2. FOR SIZE AND LOCATION SEE DRAWINGS
3. PROVIDE WARNING SIGN WHEN USED FOR NON-POTABLE WATER

HOSE VALVES WITH QUICK-DISCONNECT

REV 062001 M-839

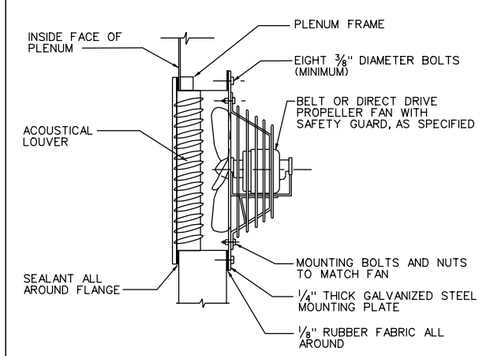

FAN WITH ACOUSTICAL LOUVER

M-906

REGISTERED PROFESSIONAL ENGINEER JACK OSBORN M.S. Exp. 12-31-05 MECHANICAL STATE OF CALIFORNIA

REV	DATE	BY	DESCRIPTION

SCALE: NTS

WARNING: 0 1/2 1 — IF THIS BAR DOES NOT MEASURE 1" THEN DRAWING IS NOT TO SCALE

DESIGNED J. OSBORN
DRAWN B. STOLL
CHECKED R. GONZALEZ

SUBMITTED BY
JOHN A. BERGEN — C31069 — LICENSE NO. — 2/16/2004 — DATE
STEVE J. HYLAND — C23892 — LICENSE NO. — 2/16/2004 — DATE

DIGALERT — DIAL TOLL FREE 1-800-642-2444 AT LEAST TWO DAYS BEFORE YOU DIG — UNDERGROUND SERVICE ALERT OF NORTHERN CALIFORNIA

LOS OSOS COMMUNITY SERVICES DISTRICT

MWH Walnut Creek, California

LOS OSOS WASTEWATER PROJECT

MECHANICAL STANDARD DETAILS – 2

SHEET BC-GM-201

Plot Date: 09-FEB-2004 17:21 File: N:\Projects\los_osos\Collect_Sys\PS\mec\BC-GM-201.dgn Job No: 1481166

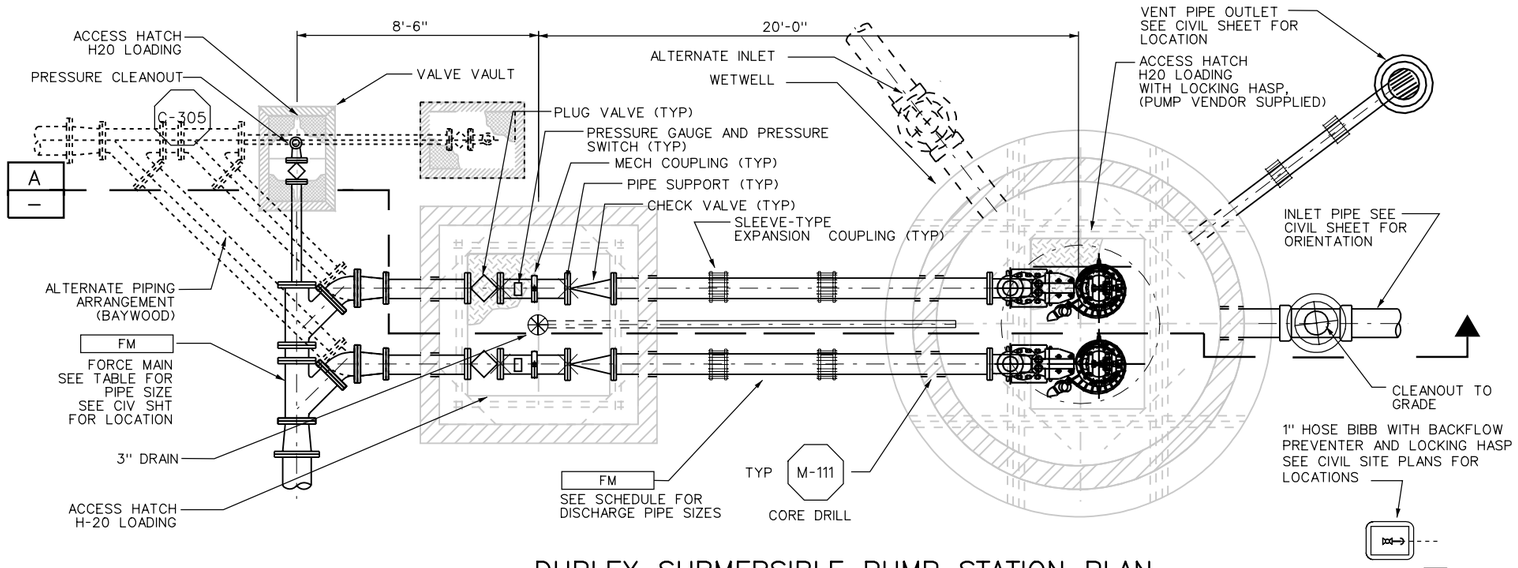

DUPLEX SUBMERSIBLE PUMP STATION PLAN

DUPLEX PUMP STATION SCHEDULE	
DESCRIPTION	SUNNY OAKS
AREA	C
PUMP NO.	SO-P-01 & 02
NUMBER OF PUMPS	2
DESIGN FLOW EACH PUMP (GPM)	120
DESIGN TDH (FT)	50.0
PUMP HP (HP)	3
TOP WETWELL SLAB ELEVATION (FT)	154.85
WETWELL FLOOR ELEVATION (FT)	141.85
WETWELL DEPTH (FT)	13
WETWELL DIAMETER (FT)	10
INLET PIPING SIZE (IN)	8
NUMBER OF INLETS	2
INLET PIPING INVERT ELEVATION (FT)	151.35
DISCHARGE PIPING SIZE (IN)	4
FORCE MAIN SIZE (IN)	4
FORCE MAIN CENTERLINE ELEVATION (FT)	147.85
HIGH HIGH ALARM ELEVATION (FT)	11
HIGH ALARM ELEVATION (FT)	7
PUMP ON ELEVATION (FT)	2
PUMP OFF ELEVATION (FT)	1

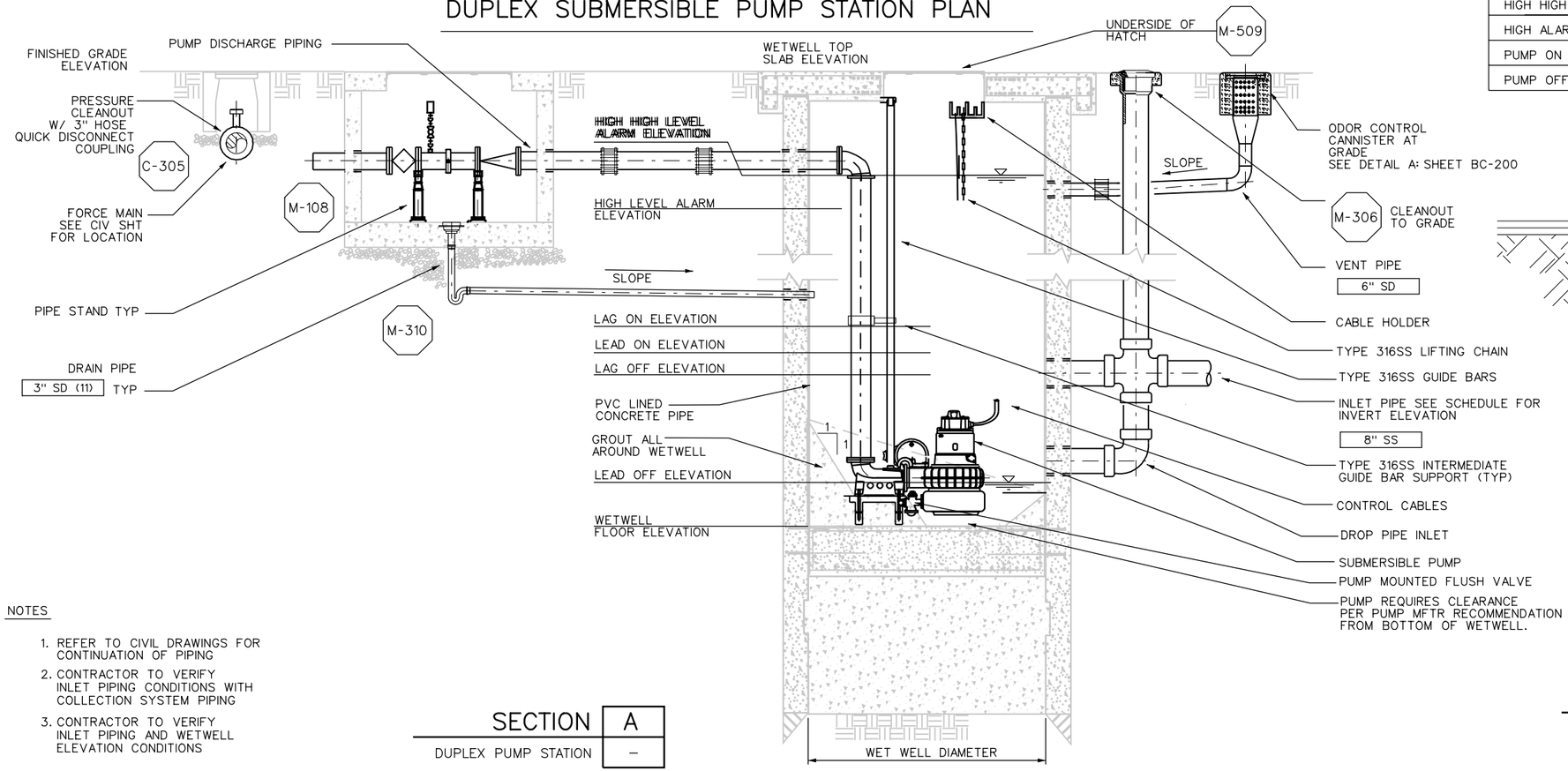

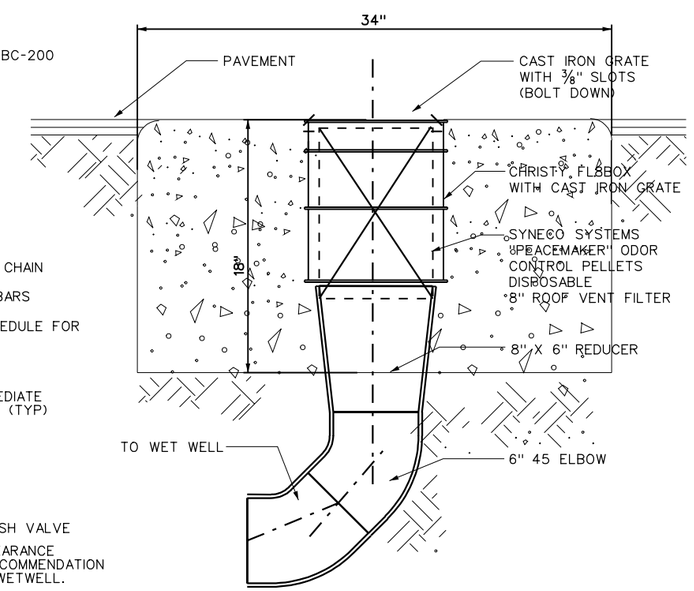

NOTES

1. REFER TO CIVIL DRAWINGS FOR CONTINUATION OF PIPING
2. CONTRACTOR TO VERIFY INLET PIPING CONDITIONS WITH COLLECTION SYSTEM PIPING
3. CONTRACTOR TO VERIFY INLET PIPING AND WETWELL ELEVATION CONDITIONS

SECTION A
DUPLEX PUMP STATION –

ODOR CONTROL A
CANNISTER DETAIL –

REGISTERED PROFESSIONAL ENGINEER JACK OSBORN C.E. No. M31171 Exp. 12-31-05 MECHANICAL STATE OF CALIFORNIA

REV	DATE	BY	DESCRIPTION

SCALE 3/8" = 1'-0"

WARNING 0 1/2 1 IF THIS BAR DOES NOT MEASURE 1" THEN DRAWING IS NOT TO SCALE

DESIGNED J. OSBORN
DRAWN J. OSBORN
CHECKED R. GONZALEZ

SUBMITTED BY
JOHN A. BERGEN — C31069 LICENSE NO. — 2/16/2004 DATE
STEVE J. HYLAND — C23892 LICENSE NO. — 2/16/2004 DATE

DIGALERT DIAL TOLL FREE 1-800-642-2444 AT LEAST TWO DAYS BEFORE YOU DIG UNDERGROUND SERVICE ALERT OF NORTHERN CALIFORNIA

LOS OSOS COMMUNITY SERVICES DISTRICT

MWH Walnut Creek, California

LOS OSOS WASTEWATER PROJECT
MECHANICAL
SUBMERSIBLE PUMP STATIONS
DUPLEX LAYOUT – PLAN & SECTION

SHEET BC-M-200

Job No: 1481166 File: N:\Projects\los_osos\Collect_Sys\PS\mec\BC-M-200.dgn Plot Date: 09-FEB-2004 17:21

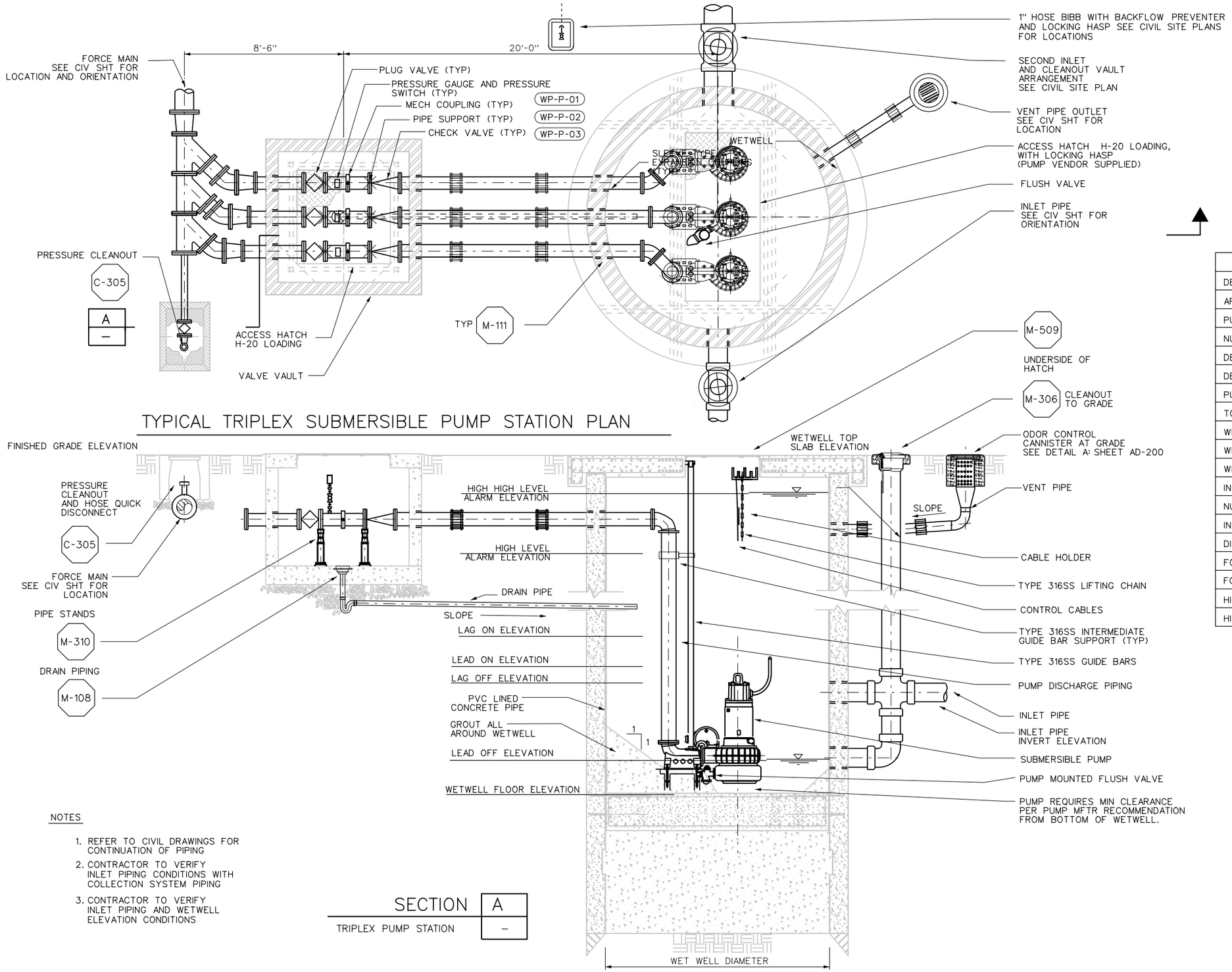

TYPICAL TRIPLEX SUBMERSIBLE PUMP STATION PLAN

TRIPLEX PUMP STATION SCHEDULE	
DESCRIPTION	LUPINE
AREA	B
PUMP NO.	LP-P-01, 02 & 03
NUMBER OF PUMPS	3
DESIGN FLOW EACH PUMP (GPM)	500
DESIGN TDH (FT)	139.0
PUMP HP (HP)	30
TOP WETWELL SLAB ELEVATION (FT)	13.6
WETWELL FLOOR ELEVATION (FT)	-4.9
WETWELL DEPTH (FT)	18.50
WETWELL DIAMETER (FT)	12.00
INLET PIPING SIZE (IN)	15
NUMBER OF INLETS	1
INLET PIPING INVERT ELEVATION (FT)	0.12
DISCHARGE PIPING SIZE (IN)	6
FORCE MAIN SIZE (IN)	10
FORCE MAIN CENTERLINE ELEVATION (FT)	-10.10
HIGH HIGH ALARM HEIGHT (FT)	11
HIGH ALARM HEIGHT (FT)	7

NOTES

1. REFER TO CIVIL DRAWINGS FOR CONTINUATION OF PIPING
2. CONTRACTOR TO VERIFY INLET PIPING CONDITIONS WITH COLLECTION SYSTEM PIPING
3. CONTRACTOR TO VERIFY INLET PIPING AND WETWELL ELEVATION CONDITIONS

SECTION A –
TRIPLEX PUMP STATION

REGISTERED PROFESSIONAL ENGINEER JACK OSBORN No. M31171 Exp. 12-31-05 MECHANICAL STATE OF CALIFORNIA

REV	DATE	BY	DESCRIPTION

SCALE: 3/8" = 1'-0"

WARNING: 0 1/2 1 — IF THIS BAR DOES NOT MEASURE 1" THEN DRAWING IS NOT TO SCALE

DESIGNED J. OSBORN
DRAWN J. OSBORN
CHECKED R. GONZALEZ

SUBMITTED BY
JOHN A. BERGEN — C31069 LICENSE NO. — 2/16/2004 DATE
STEVE J. HYLAND — C23892 LICENSE NO. — 2/16/2004 DATE

DIGALERT — DIAL TOLL FREE 1-800-642-2444 AT LEAST TWO DAYS BEFORE YOU DIG — UNDERGROUND SERVICE ALERT OF NORTHERN CALIFORNIA

LOS OSOS COMMUNITY SERVICES DISTRICT

MWH Walnut Creek, California

LOS OSOS WASTEWATER PROJECT
MECHANICAL
SUBMERSIBLE PUMP STATIONS
TRIPLEX LAYOUT – PLAN & SECTION

SHEET BC-M-201

Plot Date: 09-FEB-2004 17:21
File: N:\Projects\los_osos\Collect_Sys\PS\mec\BC-M-201.dgn
Job No: 1481166

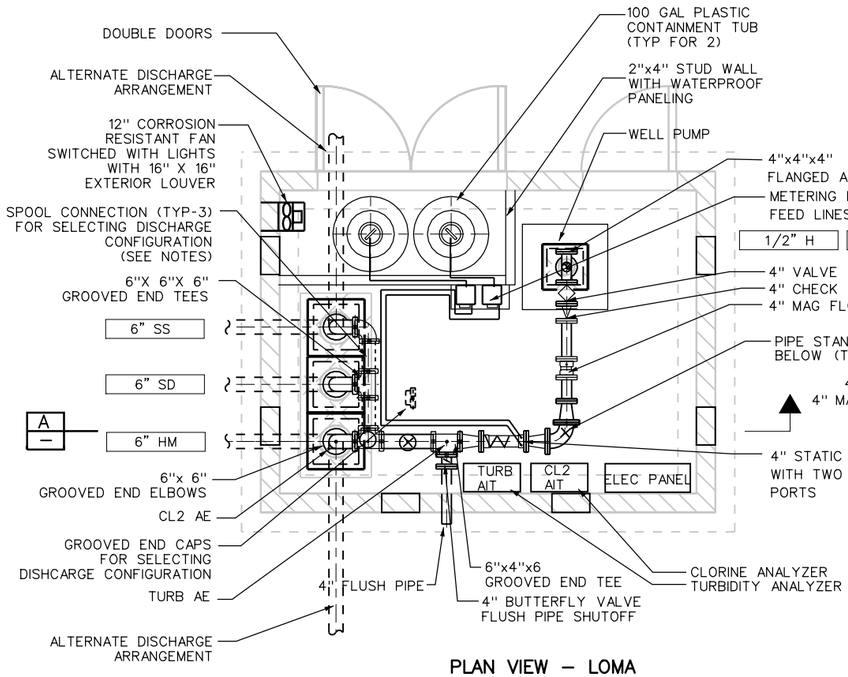

PLAN VIEW – LOMA

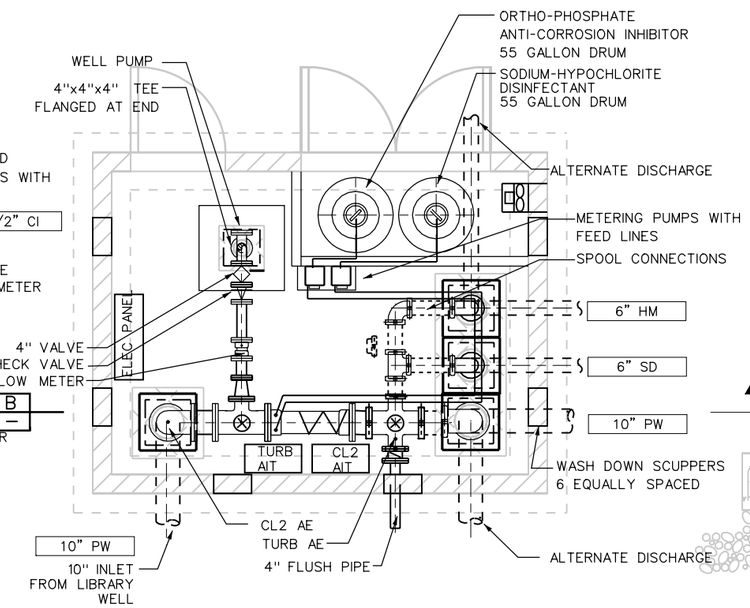

PLAN VIEW – PALISADES

HARVEST WELL SCHEDULE		
DESCRIPTION	LOMA	PALISADES
WELL TYPE	HARVEST	HARVEST
NUMBER OF PUMPS	1	1
DESIGN FLOW EACH PUMP (GPM)	140	69
PUMP TDH (FT)	160	185
PUMP HP (HP)	7.5	5.0
TOTAL WELL DEPTH (FT)	220	220

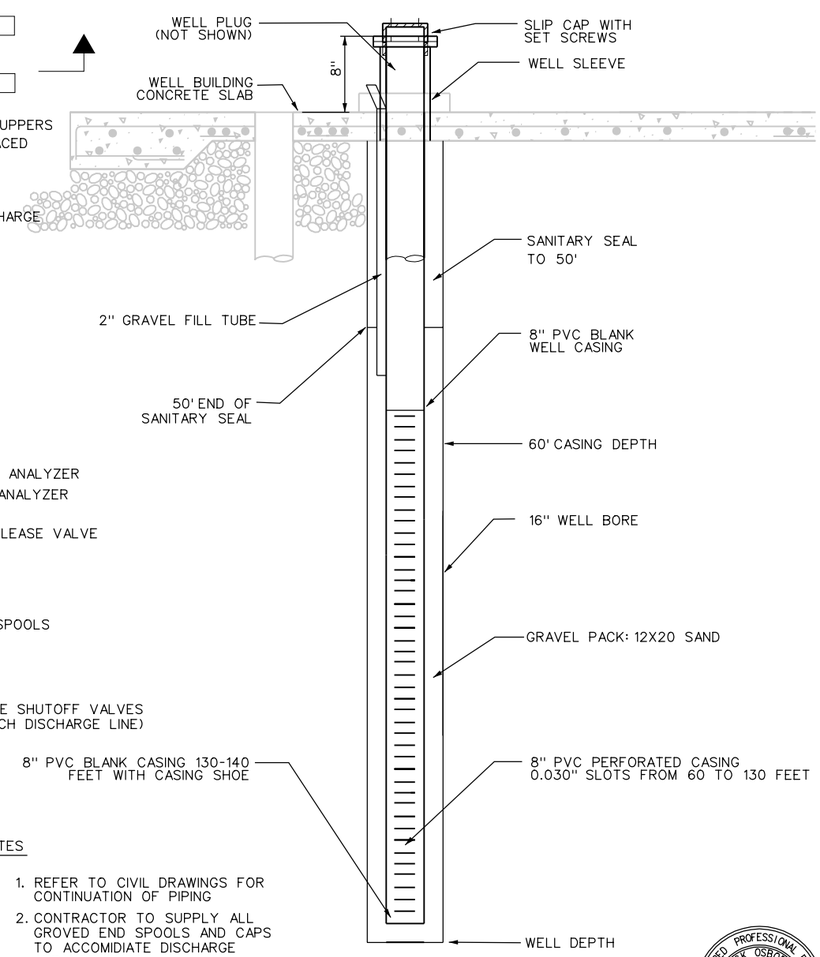

WELL SECTION

NTS

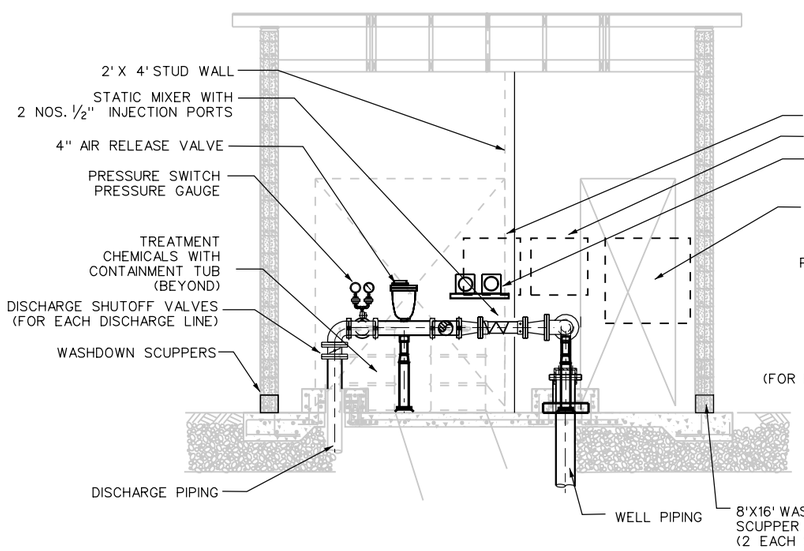

SECTION A

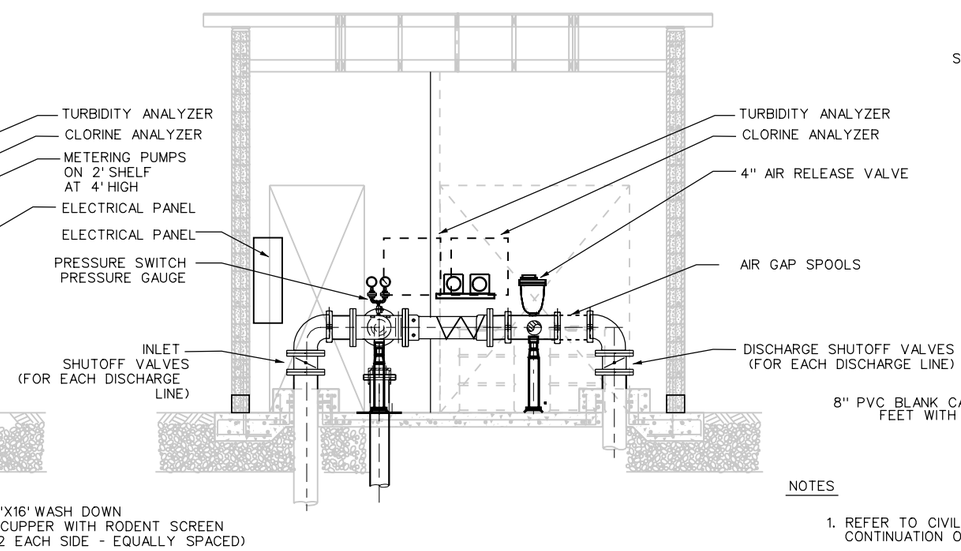

SECTION B

NOTES

1. REFER TO CIVIL DRAWINGS FOR CONTINUATION OF PIPING
2. CONTRACTOR TO SUPPLY ALL GROVED END SPOOLS AND CAPS TO ACCOMIDIATE DISCHARGE ARRANGEMENTS
3. CONTRACTOR TO COORDINATE PIPING CONNECTIONS WITH EFFLUENT DISPOSAL SYSTEM AND COLLECTION SYSTEM PIPING

REGISTERED PROFESSIONAL ENGINEER JACK OSBORN C.E. No. M3171 Exp. 12-31-05 MECHANICAL STATE OF CALIFORNIA

REV	DATE	BY	DESCRIPTION

SCALE

WARNING: 0 1/2 1 — IF THIS BAR DOES NOT MEASURE 1" THEN DRAWING IS NOT TO SCALE

DESIGNED J. OSBORN
DRAWN J. OSBORN
CHECKED R. GONZALEZ

SUBMITTED BY
JOHN A. BERGEN — C31069 LICENSE NO. — 2/16/2004 DATE
STEVE J. HYLAND — C23892 LICENSE NO. — 2/16/2004 DATE

DIGALERT — DIAL TOLL FREE 1-800-642-2444 AT LEAST TWO DAYS BEFORE YOU DIG — UNDERGROUND SERVICE ALERT OF NORTHERN CALIFORNIA

LOS OSOS COMMUNITY SERVICES DISTRICT

MWH Walnut Creek, California

LOS OSOS WASTEWATER PROJECT
MECHANICAL
HARVEST WELLS
PLAN & SECTION

SHEET BC-M-202

Job No: 1481166 File: N:\Projects\los_osos\Collect_Sys\PS\mec\BC-M-202.dgn Plot Date: 10-FEB-2004 11:42

ACOUSTICAL SILENCERS	DIMENSION (WXH) (IN)	LENGTH (IN)	PRESS DROP (IN WG)	OCTAVE BAND INSERTION LOSS AT 1000 FPM							
				1	2	3	4	5	6	7	8
INTAKE	24 X 24	36	.034	5	7	17	27	35	32	20	13
EXHAUST	24 X 24	36	.094	5	7	17	27	35	32	20	13

STANDBY POWER FACILITY	GENERATOR	FUEL TYPE
SUNNY OAKS	15 KW	NATURAL GAS

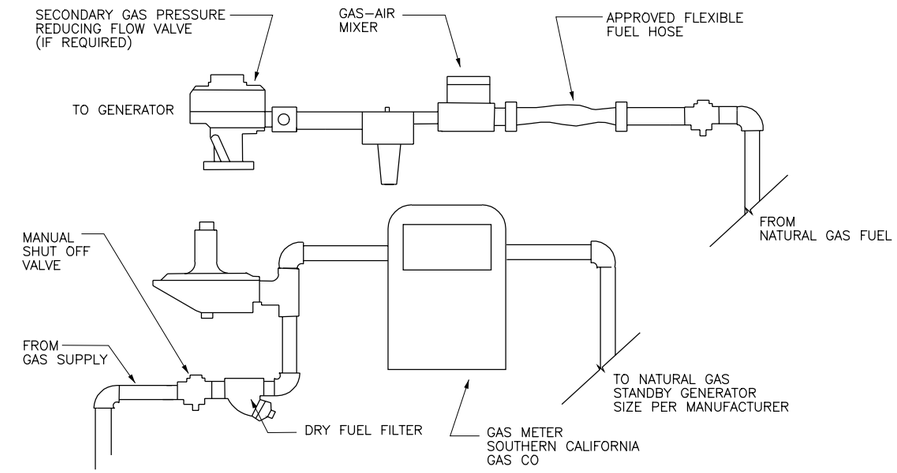

TYPICAL NATURAL GAS PIPING — A

N.T.S.

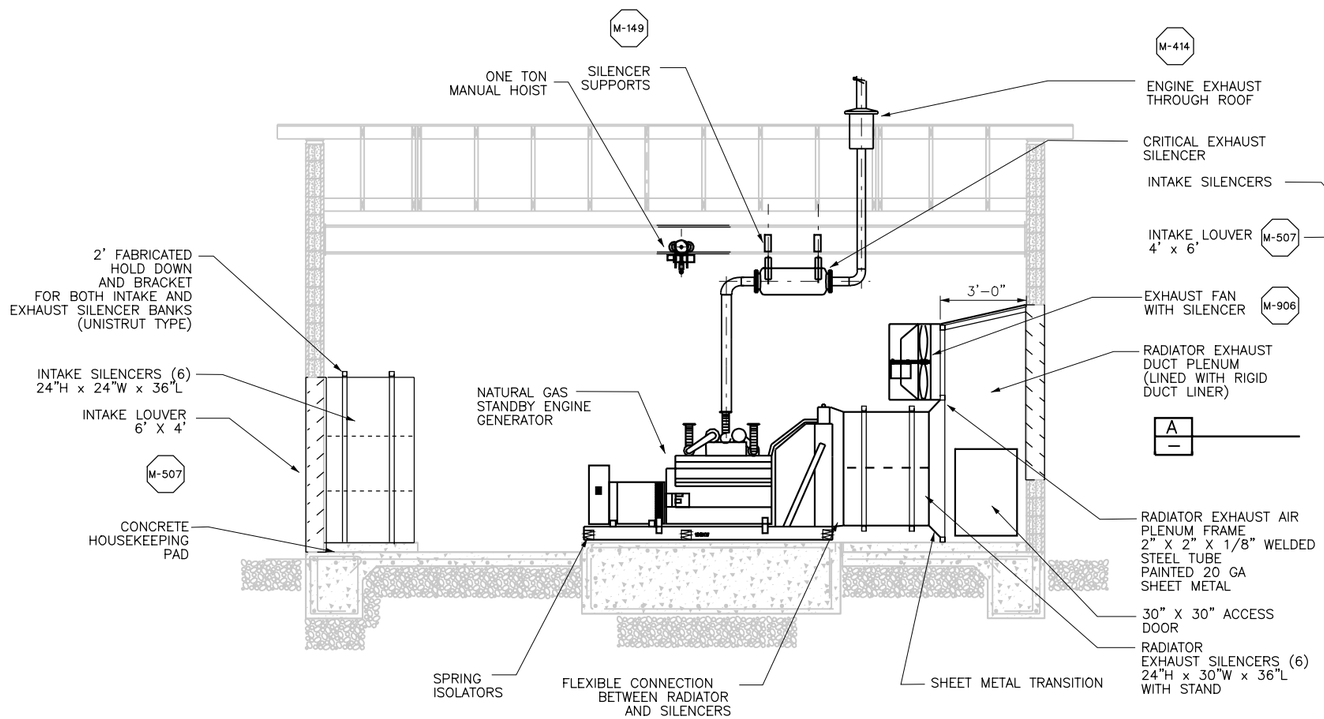

SECTION — A

STANDBY ENGINE GENERATOR —

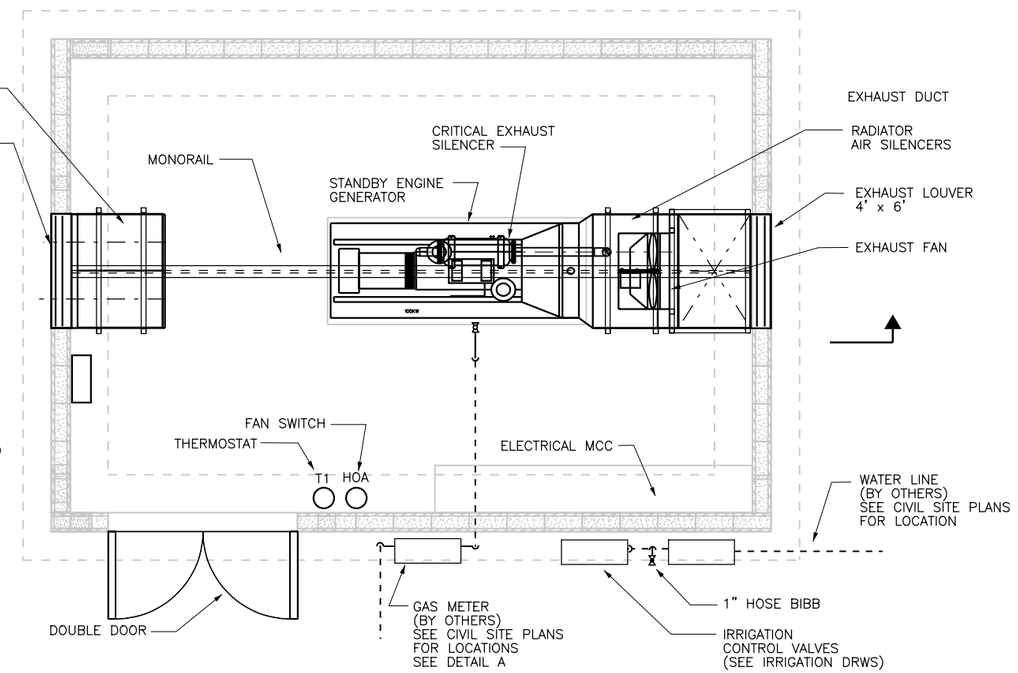

PLAN VIEW

REGISTERED PROFESSIONAL ENGINEER JACK OSBORN No. M31171 Exp. 12-31-05 MECHANICAL STATE OF CALIFORNIA

REV	DATE	BY	DESCRIPTION

SCALE: 3/8" = 1'–0"

WARNING: 0 1/2 1 — IF THIS BAR DOES NOT MEASURE 1" THEN DRAWING IS NOT TO SCALE

DESIGNED J. OSBORN
DRAWN J. OSBORN
CHECKED R. GONZALEZ

SUBMITTED BY
JOHN A. BERGEN — C31069 LICENSE NO. — 2/16/2004 DATE
STEVE J. HYLAND — C23892 LICENSE NO. — 2/16/2004 DATE

DIGALERT — DIAL TOLL FREE 1-800-642-2444 AT LEAST TWO DAYS BEFORE YOU DIG — UNDERGROUND SERVICE ALERT OF NORTHERN CALIFORNIA

LOS OSOS COMMUNITY SERVICES DISTRICT

MWH Walnut Creek, California

LOS OSOS WASTEWATER PROJECT
MECHANICAL
STANDBY POWER BUILDING
PLAN & SECTION
NATURAL GAS ENGINE

SHEET BC–M–203

Job No: 1481166 File: N:\Projects\los_osos\Collect_Sys\PS\mec\BC-M-203.dgn Plot Date: 09-FEB-2004 17:22

ELECTRICAL SYMBOLS

PLAN

- EXPOSED OR CONCEALED CONDUIT
- CONDUIT RUN UNDERGROUND OR IN CONCRETE
- CONDUIT RUN – CHANGE IN ELEVATION
- CONDUIT TURNING UP
- CONDUIT TURNING DOWN
- CONDUITS GROUPED TOGETHER BUT SHOWN AS A SINGLE LINE FOR CLARITY
- FROM FLOOR ABOVE TO FLOOR BELOW
- CONDUIT CAPPED, OR SEALED
- HOMERUN TO EQUIPMENT INDICATED (1" CONDUIT, 3 #10, 1 #10 GND UNLESS OTHERWISE INDICATED)
- RACEWAY BOX
  - * – BOX TYPE
    - MH---- MANHOLE
    - HH---- HANDHOLE
    - PB---- PULLBOX
- JUNCTION BOX OR FITTING
- CONDUIT X – CONDUIT NUMBER (SEE CONDUIT SCHEDULE FOR DETAILS)
- X–#a INCANDESCENT, HPS OR MH FIXTURE
  - X – LIGHTING PANEL DESIGNATION
  - # – CIRCUIT NUMBER, a – SWITCH DESIGNATION
- UNSWITCHED FIXTURE (NIGHT LIGHT)
- WALL MOUNTED FIXTURE
- POLE, BRACKET, ARM AND STREETLIGHT
- FLUORESCENT LIGHTING FIXTURE
- FLUORESCENT LIGHT FIXTURE, UNSWITCHED
- EMERGENCY LIGHT FIXTURE, BATTERY OPERATED
- EXIT LIGHT, SHOWN WITH TWO ILLUMINATED SIDES, ARROWS INDICATE DIRECTION OF EXIT
- A / # – FIXTURE TYPE (SEE LIGHTING FIXTURE SCHEDULE FOR DETAILS)
  - # INDICATES APPROX. MOUNTING HEIGHT ABOVE FINISHED FLOOR.
  - CLG INDICATES CEILING MOUNT
- $*X–#a LIGHT SWITCH
  - X – LIGHITING PANEL DESIGNATION
  - # – CIRCUIT DESIGNATION
  - a – SWITCH DESIGNATION
  - * – SWITCH TYPE
    - 3----- 3 WAY
    - 4----- 4 WAY
    - D----- DIMMER
    - M----- MANUAL MOTOR STARTER
- X–#* 120V DUPLEX RECEPTACLE, NEMA CONFIGURATION 5–20R (WALL MOUNT)
  - X – LIGHTING PANEL DESIGNATION
  - # – CIRCUIT DESIGNATION
  - * –TYPE
    - WP---- WEATHERPROOF
    - XP---- EXPLOSION PROOF
    - GFCI-- GROUND FAULT CIRCUIT INTERRUPTER
- 120V DUPLEX RECEPTACLE, NEMA CONFIGURATION 5–20R (FLOOR MOUNT)
- * SINGLE SPECIAL PURPOSE RECEPTACLE 240V 1 PHASE, ASTRISK INDICATES AMPERAGE
- * WELDING RECEPTACLE ASTRISK INDICATES AMPERAGE
- * SPECIAL PURPOSE RECEPTACLE 480 VAC, ASTRISK INDICATES AMPERAGE
- FLOOR TYPE TELEPHONE OUTLET
- WALL TYPE TELEPHONE SYSTEM OUTLET
- WALL TYPE COMPUTER OUTLET
- LIGHTING PANEL
- POWER PANEL
- DISCONNECT SWITCH
- M MOTOR
- T THERMOSTAT
- HORN
- GROUND ROD AND GROUND WELL
- GROUND ROD 3/4 " x 10' – 0" (UNLESS OTHERWISE NOTED)
- GROUND CONNECTION BOLTED TYPE
- GROUND CONNECTION – EXOTHERMIC TYPE
- BARE COPPER GROUND TO GROUND WIRE IN SLAB, OR UNDERGROUND GROUND GRID, SIZE AS NOTED
- F ALARM HORN WITH STROBE
- A F AMPLIFIER/LOUDSPEAKER
- * DETECTOR, * INDICATES TYPE
  - SD----SMOKE DETECTOR
  - HD----HEAT DETECTOR
  - CD----COMBINATION DETECTOR
- FA FIRE ALARM PULL STATION
- F SEPARATE OR ACCESSORY STROBE LIGHT
- F FIRE BELL WITH STROBE LIGHT
- FS FIRE SUPRESSION SWITCH
- ER END–OF–LINE TERMINATOR
- I* INTERCOM SPEAKER
  - * INDICATES TYPE, REFER TO SPECIFICATIONS
- I* INTERCOM SPEAKER WITH STROBE LIGHT
  - * INDICATES TYPE, REFER TO SPECIFICATIONS
- I INTERCOM WALL JACK
- HS I INTERCOM HANDSET, WALL MOUNTED
- VC* VIDEO CAMERA
  - * INDICATES TYPE
    - F----- FIXED
    - PTZ--- PAN–TILT–ZOOM
- * SECURITY ACCESS DEVICE, * INDICATES TYPE
  - CR---- CARD READER
  - KS---- KEY SWITCH
  - PS---- DIGITAL KEYPAD

SINGLE LINE DIAGRAM

- MEDIUM VOLTAGE VACUUM DRAW–OUT STARTER
- 52 MEDIUM VOLTAGE DRAWOUT BREAKER
- * (#) ANSI RELAY DEVICE
  - * INDICATES ANSI DEVICE
  - (#) INDICATES QUANTITY
    - 25------ SYNCHRONISM CHECK RELAY
    - 27------ UNDERVOLTAGE
    - 27/47--- UNDERVOLTAGE, PHASE SEQUENCE, UNBALANCED VOLTAGE
    - 32------ DIRECTIONAL POWER RELAY
    - 41------ FIELD CONTACTOR
    - 43------ SELECTOR SWITCH
    - 49------ HIGH OIL TEMPERATURE
    - 50/51--- INSTANTANEOUS AND TIME OVERCURRENT
    - 50/51N-- INSTANTANEOUS AND TIME RESIDUALLY CONNECTED GROUND OVERCURRENT
    - 51G----- GROUND FAULT
    - 60------ VOLTAGE BALANCE
    - 62------ TIME DELAY
    - 63------ SUDDEN PRESSURE
    - 67------ AC DIRECTIONAL CURRENT RELAY
    - 71L----- LOW OIL LEVEL
    - 81------ FREQUENCY RELAY
    - 83------ CONTROL POWER TRANSFORMER
    - 86------ LOCKOUT
    - 87TL---- TRANSFORMER DIFFERENTIAL
    - 87M----- MOTOR DIFFERENTIAL

THERMAL MAGNETIC

- 100 / 20 – FRAME (AMPS) / TRIP (AMPS)
- 100 / 20 LOW VOLTAGE DRAWOUT CIRCUIT BREAKER

MCP

- 150 / MCP – CONTINUOUS AMPS / TRIP SETTING BASED ON MOTOR HORSEPOWER
- 40 / MCP COMBINATION NEMA RATED STARTER WITH MCP DISCONNECT AND CONTROL POWER TRANSFORMER
  - ROMAN NUMERIAL – NEMA SIZE
  - * – STARTER TYPE
    - NO SUBSCRIPT ---- FULL VOLTAGE NON–REVERSING
    - RVAT ---------- REDUCED VOLTAGE AUTO TRANSFORMER
    - FVR ---------- FULL VOLTAGE REVERSING
    - 2S2W ---------- TWO SPEED TWO WINDING
    - 2S1W ---------- TWO SPEED ONE WINDING
- * VFD VARIABLE FREQUENCY DRIVE
  - * INDICATES AMPERE RATING
- * RVSS REDUCED VOLTAGE SOLID STATE STARTER
  - * INDICATES AMPERE RATING
- * * PACKAGED EQUIPMENT
  - * INDICATES KW, KVA OR HP RATING AS INDICATED
- K KEY INTERLOCK
- GENERATOR, RATINGS AS INDICATED
- MANUAL OR AUTOMATIC TRANSFER SWITCH RATINGS AS INDICATED
- * METERING DEVICE
  - * INDICATES METER TYPE
    - WHM------- WATT HOUR METER
    - WM-------- WATT METER
    - AM-------- AMMETER
    - VM-------- VOLTMETER
    - PFM------- POWER FACTOR METER
- AS AMMETER SWITCH
- VS VOLTMETER SWITCH
- 480/120 (3) POTENTIAL TRANSFORMER, RATIO AND NUMBER OF PT'S AS NOTED
- 100/5 (3) CURRENT TRANSFORMER, RATIO AND NUMBER OF CT'S AS NOTED
- 5A FUSE, SIZED AS NOTED
- 5* MOTOR, HORSEPOWER AS NOTED
  - * INDICATES FULL LOAD AMPS
- TRANSFORMER WITH GROUNDED SECONDARY, KVA SIZE & VOLTAGE RATIO AS INDICATED
- FUSED CONTROL POWER TRANSFORMER
- MOV ELECTRICAL MOTOR OPERATED VALVE, WITH INTEGRAL REVERSING STARTER
- 30A DISCONNECT SWITCH, SIZE AS NOTED
- 30 / 30 FUSED DISCONNECT SWITCH, SIZED AS NOTED
- CAPACITOR
- TVSS TRANSIENT VOLTAGE SURGE SUPRESSOR
- SSM SOLID STATE METERING DEVICE
- SSMP SOLID STATE MOTOR PROTECTIVE DEVICE
- LIGHTNING ARRESTOR AND SURGE CAPACITOR
- CROSSING OF CONDUCTORS–NOT CONNECTED
- CONDUCTORS CONNECTED

REGISTERED PROFESSIONAL ENGINEER CHARLES M. REYNOLDS No. E011791 Exp. 9-30-04 ELECTRICAL STATE OF CALIFORNIA

05 FEB 2004

REV	DATE	BY	DESCRIPTION

SCALE: NONE

WARNING: 0 1/2 1 — IF THIS BAR DOES NOT MEASURE 1" THEN DRAWING IS NOT TO SCALE

DESIGNED A. P. SORLEY
DRAWN A. P. SORLEY
CHECKED K. A. CREAGER

SUBMITTED BY
JOHN A. BERGEN — C31069 LICENSE NO. — 2/16/2004 DATE
STEVEN J. HYLAND — C23892 LICENSE NO. — 2/16/2004 DATE

DIGALERT — DIAL TOLL FREE 1-800-642-2444 AT LEAST TWO DAYS BEFORE YOU DIG — UNDERGROUND SERVICE ALERT OF NORTHERN CALIFORNIA

LOS OSOS COMMUNITY SERVICES DISTRICT

MWH Walnut Creek, California

LOS OSOS WASTEWATER PROJECT

ELECTRICAL
STANDARD ELECTRICAL SYMBOLS – 1

SHEET BC–GE–000

Job No: 1481166 File: N:\Projects\los_osos\Collect_Sys\PS\ele\BC–GE–000.dgn Plot Date: 08–FEB–2004 11:01

ELECTRICAL SYMBOLS

SCHEMATIC DIAGRAM

CONTROL RELAY OR COIL
* INDICATES DEVICE
CR ---- CONTROL RELAY
TD ---- TIME DELAY RELAY (TIMING RANGE AS INDICATED)
M ---- MOTOR STARTER
PC ---- PHOTOCLELL

NORMALLY OPEN CONTACT

NORMALLY CLOSED CONTACT

TIMED CONTACTS – CONTACT ACTION DELAYED AFTER COIL IS:

ENERGIZED

NORMALLY OPEN WITH TIME DELAY CLOSING

NORMALLY CLOSED WITH TIME DELAY OPENING

DE–ENERGIZED

NORMALLY OPEN WITH INSTANT CLOSING AND TIME DELAY OPENING

NORMALLY CLOSED WITH INSTANT OPENING AND TIME DELAY CLOSING

NORMALLY OPEN PUSHBUTTON

NORMALLY CLOSED PUSHBUTTON,

NO/NC MAINTAINED PUSHBUTTON

THREE–POSITION SELECTOR SWITCH.
H---- HAND
M---- MANUAL
R---- REMOTE
L---- LOCAL
A---- AUTOMATIC
O---- OFF

TWO–POSITION SELECTOR SWITCH:

THREE POSITION SPRING RETURN–TO–CENTER MOMENTARY CONTACT SWITCH

SINGLE POLE TOGGLE SWITCH

VACUUM OR PRESSURE SWITCH, CLOSE ON RISING PRESSURE

VACUUM OR PRESSURE SWITCH, OPEN ON RISING PRESSURE

FLOAT LEVEL SWITCH, CLOSE ON RISING LEVEL

FLOAT LEVEL SWITCH, OPEN ON RISING LEVEL

NORMALLY OPEN

NORMALLY CLOSED

NORMALLY OPEN HELD CLOSED

NORMALLY CLOSED HELD OPEN

MAINTAINED POSITION

TEMPERATURE SWITCH, CLOSE ON RISING TEMPERATURE

TEMPERATURE SWITCH, OPEN ON RISING TEMPERATURE

FLOW SWITCH, CLOSE ON INCREASING FLOW

FLOW SWITCH, OPEN ON INCREASING FLOW

TORQUE SWITCH OPENS ON INCREASING TORQUE

LOCATION LEGEND
ALL DEVICES ARE LOCATED IN THE MOTOR CONTROLLER UNLESS INDICATED OTHERWISE

1 FIELD
2 LCS
3 LCP
4 MCC
5 PLC

DI — DIGITAL INPUT TO PLC/RTU/DCS

DIGITAL OUTPUT FROM PLC/RTU/DCS NORMALLY OPEN

DIGITAL OUTPUT FROM PLC/RTU/DCS NORMALLY CLOSED

AI — ANALOG INPUT TO PLC/RTU/DCS 4–20 mA UNLESS OTHER OTHERWISE NOTED

AO — ANALOG OUTPUT FROM PLC/RTU/DCS 4–20 mA UNLESS OTHER OTHERWISE NOTED

SV — SOLENOID VALVE

PILOT LIGHT
* INDICATES LENS COLOR
R---- RED
G---- GREEN
A---- AMBER
W---- WHITE

PILOT LIGHT PUSH–TO–TEST SEE ABOVE FOR LENS COLORS

HORN

ETM — ELAPSED TIME METER

HEATER

GROUND CONNECTION

CROSSING OF CONDUCTORS–NOT CONNECTED

CONDUCTORS CONNECTED

FUSE

VOLTAGE SURGE SUPPRESSOR

LIGHTING FIXTURE SCHEDULE

TYPE	LAMPS NO/WATTS	VOLTS	DESCRIPTION
A	2 /32	120	4' FLUORESCENT FIXTURE ENCLOSED AND GASKETED FIBER GLASS HOUSING, ACRYLIC LENS STEEL CHANNEL, ANIODIZED ALUMINUM REFLECTOR. ELECTRONIC BALLAST. HOLPHANE ES CATALOG NUMBER ES-S-4-A-NNN-N-4-1-1.
B	LED	120	EXIT SIGN WITH 20 GAUGE COLD ROLLED STEEL. WHITE POWDER COAT FINISH. SIGN CONSUMES 4.1 WATTS WITH BATTERY BACKUP. RUUD EXS SERIES CATALOG NUMBER EXSB1R
C	1/175	120	METAL HALIDE CEILING MOUNTED FIXTURE. CORROSION RESISTANT FIBERGLASS REINFORCED POLYESTER ENCLOSURE REFLECTOR AND GUARD. APPLETON LPAH1710-MT-G OR EQUAL.
D	1/70	120	WALL MOUNTED FIXTURE. DIE-CAST ALUMINUM HOUSING WITH BROZNE FINISH. HPS LAMP, SPECULAR ANODIZED ALUMINUM REFELECTOR. LISTED FOR WET LOCATIONS. RUUD SE SERIES CATALOG NUMBER SE4507-1-P
E	18	120	EMERGENCY FIXTURE, TWO 12 VOLT 50 WATT HALOGEN LAMPS. LEAD CALCUIM BATTERIES WITH SOLID STATE CHARGER, TIME DELAY, BROWNOUT PROTECTION AND TEST SWITCH, NEMA RATED CORROSION AND IMPACT RESISTANT FIBERGLASS HOUSING. HOLOPHANE DESOTO CATALOG NUMBER DM5-C-50-T-2-WL

REGISTERED PROFESSIONAL ENGINEER CHARLES M. REYNOLDS No.E011791 Exp. 9-30-04 ELECTRICAL STATE OF CALIFORNIA
05 FEB 2004

REV	DATE	BY	DESCRIPTION

SCALE: NONE

WARNING: 0 1/2 1 — IF THIS BAR DOES NOT MEASURE 1" THEN DRAWING IS NOT TO SCALE

DESIGNED A. P. SORLEY
DRAWN A. P. SORLEY
CHECKED K. A. CREAGER

SUBMITTED BY
JOHN A. BERGEN — C31069 LICENSE NO. — 2/16/2004 DATE
STEVE J. HYLAND — C23892 LICENSE NO. — 2/16/2004 DATE

DIGALERT — DIAL TOLL FREE 1-800-642-2444 AT LEAST TWO DAYS BEFORE YOU DIG — UNDERGROUND SERVICE ALERT OF NORTHERN CALIFORNIA

LOS OSOS COMMUNITY SERVICES DISTRICT

MWH Walnut Creek, California

LOS OSOS WASTEWATER PROJECT
ELECTRICAL
STANDARD ELECTRICAL SYMBOLS – 2 & LIGHTING FIXTURE SCHEDULE

SHEET BC–GE–001

Job No: 1481166 File: N:\Projects\los_osos\Collect_Sys\PS\ele\BC-GE-001.dgn Plot Date: 08-FEB-2004 11:01

ABBREVIATIONS

A	AMPERE, AUTOMATIC
AC	ALTERNATING CURRENT
AF	CIRCUIT BREAKER FRAME SIZE
AM	AMMETER
ANN	ANNUNCIATOR
AS	ADJUSTABLE SPEED
AT	AMPERE TRIP
ATS	AUTOMATIC TRANSFER SWITCH
AUTO	AUTOMATIC
AWG	AMERICAN WIRE GAUGE
BATT	BATTERY
BC	BARE COPPER
BKR	BREAKER
C	CONDUIT, CLOSED
CAP	CAPACITOR
CB	CIRCUIT BREAKER
CKT	CIRCUIT
CLF	CURRENT LIMITING FUSE
COM	COMMON
COMP	COMPARTMENT
CP	CONTROL PANEL
CPT	CONTROL POWER TRANSFORMER
CR	CONTROL RELAY, CARD READER
CT	CURRENT TRANSFORMER
DCS	DISTRIBUTED CONTROL SYSTEM
DISC	DISCONNECT
DISTR	DISTRIBUTION
DPDP	DOUBLE POLE DOUBLE THROW
DPST	DOUBLE POLE SINGLE THROW
E	EMERGENCY
EMT	ELECTRICAL METALLIC TUBING
ENCL	ENCLOSURE
ETM	ELAPSED TIME METER
F	FREQUENCY, FUSE, FIXED
FDR	FEEDER
FLA	FULL LOAD AMPS
FLUOR	FLUORESCENT
FM	FREQUENCY METER
FO	FIBER OPTIC
FVR	FULL VOLTAGE REVERSING
FVNR	FULL VOLTAGE NON-REVERSING
GEN	GENERATOR
GFCI	GROUND FAULT CIRCUIT INTERRUPTER
GND	GROUND
H	HAND
HD	HEAT DETECTOR
HH	HAND HOLE

HID	HIGH INTENSITY DISCHARGE
HOA	HAND-OFF-AUTOMATIC
HPS	HIGH PRESSURE SODIUM
HS	HAND SWITCH
HZ	HERTZ
IMC	INTERMEDIATE METALLIC CONDUIT
INCAND	INCANDESCENT
IND	INDICATION
INST	INSTANTANEOUS
I/O	INPUT/OUTPUT
Isc	SHORT CIRCUIT CURRENT, AMPS
ISO	ISOLATION
J	JUNCTION BOX
KA	THOUSAND AMPERES
KAIC	THOUSAND AMP INTERRUPTING CURRENT
KCMIL	THOUSAND CIRCULAR MILS
KVA	KILOVOLT AMPERE
L	LOCAL
LCP	LOCAL CONTROL PANEL
LCS	LOCAL CONTROL STATION
LOC	LOCAL
LOR	LOCAL-OFF-REMOTE
LOS	STOP LOCKOUT PUSHBUTTON
LP	LIGHTING PANEL
LRA	LOCKED ROTOR AMPS
LS	LEVEL SWITCH
LTG	LIGHTING
LTS	LIGHTS
M	MOTOR CONTACTOR COIL
mA	MILLIAMPERE
MCP	MOTOR CIRCUIT PROTECTOR
MLO	MAIN LUGS ONLY
MOV	MOTOR OPERATED VALVE
MS	MANUAL MOTOR STARTER
MTS	MANUAL TRANSFER SWITCH
NEUT	NEUTRAL
NP	NAMEPLATE
O	OPEN, OFF
OL	OVERLOAD
PA	PUBLIC ADDRESS
PB	PUSHBUTTON, PULLBOX
PC	PHOTOCELL
PCM	PROCESS CONTROL MODULE
PF	POWER FACTOR
PFM	POWER FACTOR METER
PH	PHASE

PL	PILOT LIGHT
PNBLD	PANELBOARD
PP	POWER PANELBOARD
POS	POSITION
POT	POTENTIOMETER
PRI	PRIMARY
PT	POTENTIAL TRANSFORMER
PTZ	PAN-TILT-ZOOM
PWR	POWER
R	REMOTE
RECPT	RECEPTACLE
RGS	RIGID GALVANIZED STEEL
RMS	ROOT MEAN SQUARE
RTU	REMOTE TERMINAL UNIT
RVSS	REDUCED VOLTAGE SOLID STATE
SEL SW	SELECTOR SWITCH
SEQ	SEQUENCE
SHLD	SHIELDED
SIG	SIGNAL
SP	SPARE
SPDT	SINGLE POLE DOUBLE THROW
SSM	SOLID STATE METER
SSMP	SOLID STATE MOTOR PROTECTOR
SP HTR	SPACE HEATER
SPST	SINGLE POLE SINGLE THROW
ST, SH	SHUNT TRIP
STR	STARTER
SW	SWITCH
SWBD	SWITCHBOARD
SWGR	SWITCHGEAR
TACH	TACHOMETER
TB	TERMINAL BOX
TERM	TERMINAL
TM	REPEAT CYCLE TIMER
TD	TIME DELAY RELAY
TS	TEMPERATURE SWITCH
UPS	UNINTERRUPTABLE POWER SUPPLY
UON	UNLESS OTHERWISE NOTED, SHOWN, INDICATED OR DESCRIBED
V	VOLTAGE, VOLTS
VA	VOLT AMPERE
VAR	VOLT AMPERE REACTIVE
VFD	VARIABLE FREQUENCY DRIVE
VM	VOLTMETER
VP	VAPOR PROOF
W	WATTS, WIRE
WM	WATT METER
WP	WEATHERPROOF
XFMR	TRANSFORMER
XMTR	TRANSMITTER
XP	EXPLOSION PROOF

GENERAL NOTES

1. ALL RACEWAYS AND EQUIPMENT SHALL BE INSTALLED AND GROUNDED IN ACCORDANCE WITH THE LATEST EDITION OF THE NATIONAL ELECTRICAL CODE AND APPLICABLE LOCAL CODES.
2. THE CONTRACTOR SHALL VERIFY THE EXACT LOCATION OF TERMINAL BOXES AND CONDUIT ENTRANCES OF ALL EQUIPMENT AGAINST APPROVED SHOP DRAWINGS BEFORE STUBBING UP CONDUITS.
3. REFER TO SPECIFICATION SECTION 16110 FOR REQUIREMENTS RELATED TO FLEXIBLE CONDUIT INSTALLATION
4. CONDUIT RUNS ARE SHOWN DIAGRAMMATICALLY ONLY AND SHALL BE INSTALLED IN A MANNER TO PREVENT CONFLICTS WITH EQUIPMENT OR STRUCTURAL CONDITIONS. EXPOSED CONDUIT SHALL BE INSTALLED PARALLEL OR PERPENDICULAR TO BEAMS AND WALLS. REFER TO SPECIFICATION 16110.
5. CONDUIT STUB-UPS SHALL NOT BE MORE THEN 6" FROM THE CENTER LINE OF TERMINAL BOXES.
6. IN THE EVENT OF INTERFERENCE BETWEEN ELECTRICAL EQUIPMENT SHOWN ON THE DRAWINGS AND OTHER EQUIPMENT, THE CONTRACTOR SHALL NOTIFY THE ENGINEER IN WRITING AND THE ENGINEER SHALL APPROVE PROPOSED CHANGES BEFORE THEY ARE MADE.
7. ALL SURFACE MOUNTED PANELS AND PANELBOARDS ON THE INTERIOR OF EXTERIOR WALLS ABOVE GRADE OR IN OTHER LOCATIONS CONSIDERED DAMP OR WET SHALL BE MOUNTED SO AS TO MAINTAIN A 1/4 " (MINIMUM) AIR SPACE BETWEEN THE ENCLOSURE AND THE WALL.
8. LOCATION OF PULLBOXES ARE APPROXIMATE. THE CONTRACTOR SHALL COORDINATE EXACT LOCATION OF PULLBOXES WITH MECHANICAL PIPING AND SHALL BE 6" (MINIMUM) AWAY FROM MECHANICAL PIPING FLOW LINES.
9. ONLY MAJOR PULLBOXES ARE SHOWN. THE CONTRACTOR SHALL PROVIDE ADDITIONAL PULLBOXES WHERE REQUIRED TO MAKE A WORKABLE INSTALLATION.
10. THE WORK SHALL BE PERFORMED IN ACCORDANCE WITH THE DETAILS WHETHER OR NOT THEY ARE REFERENCED ON THE DRAWINGS.
11. ALL CONDUIT RUNS CROSSING EXPANSION JOINTS SHALL HAVE EXPANSION OR EXPANSION AND DEFLECTION TYPE FITTINGS. FOR LOCATIONS OF EXPANSION JOINTS, REFER TO THE STRUCTURAL DRAWINGS.
12. LIGHTING FIXTURES SHALL BE MOUNTED ACCORDING TO THE MOUNTING HEIGHT GIVEN ON THE DRAWINGS, WITH THE DISTANCE BEING MEASURED FROM THE BOTTOM OF THE FIXTURE TO THE FINISHED FLOOR. THE APPROPRIATE MOUNTING BRACKETS AND HARDWARE SHALL BE SUPPLIED.
13. ALL PANELBOARDS SHALL BE MOUNTED SO THAT THE DISTANCE FROM THE TOP CIRCUIT BREAKER OPERATING HANDLE TO THE FINISHED FLOOR SHALL NOT EXCEED 6'-7".
14. THE WIRING DIAGRAMS, QUANTITY AND SIZE OF WIRES AND CONDUIT REPRESENT A SUGGESTED ARRANGEMENT BASED UPON SELECTED STANDARD COMPONENTS OF ELECTRICAL EQUIPMENT. MODIFICATIONS ACCEPTABLE TO THE ENGINEER MAY BE MADE BY THE CONTRACTOR TO ACCOMMODATE EQUIPMENT ACTUALLY PURCHASED. THE BASIC SEQUENCE AND METHOD OF CONTROL MUST BE MAINTAINED AS INDICATED ON THE DRAWINGS AND/OR SPECIFICATIONS.
15. CONNECTIONS BETWEEN RIGID CONDUIT AND MOTOR TERMINAL BOXES OR SIMILAR EQUIPMENT SUBJECT TO VIBRATION SHALL BE FLEXIBLE LIQUID-TIGHT CONDUIT.
16. CONDUITS SHALL BE TERMINATED SO AS TO PERMIT NEAT CONNECTION TO MOTORS AND OTHER EQUIPMENT.
17. CONDUITS FOR FUTURE EQUIPMENT OR EXTENSION SHALL BE TERMINATED AS SHOWN IN DETAIL OR AS SPECIFIED.
18. MCC AND SWITCHGEAR COMPARTMENT DESIGNATIONS SHALL BE AS INDICATED BELOW:

    BLANK/SPACE: CONTAINS NECESSARY BUS AND HARDWARE FOR FUTURE ADDITION OF BREAKERS OR STARTERS.

    SPARE: CONTAINS A COMPLETE INSTALLED BREAKER OR STARTER AVAILABLE FOR FUTURE USE.
19. ALL MOTOR STARTER CONTROL POWER TRANSFORMERS SHALL BE SIZED TO PROVIDE SUFFICIENT VOLT-AMPERE CAPACITY FOR OPERATING ALL LOCAL AND REMOTE ELECTRICAL DEVICES ASSOCIATED WITH CONTROL OF THE MOTOR IN ADDITION TO THE STARTER COIL.
20. MOTOR CONTROL CENTERS AND ALL FREE STANDING PANELS SHALL BE SET ON CONCRETE HOUSEKEEPING PADS WITH LEVELING CHANNELS EMBEDDED IN THE PAD.
21. ALL RECEPTACLES IN OUTDOOR AND ANTICIPATED WET AREAS SHALL BE GROUND FAULT CIRCUIT INTERRPUTER RECEPTACLES WITH WEATHERPROOF COVERS.
22. ELECTRICAL CONTRACTOR SHALL VISIT THE SITE PRIOR TO BIDDING THE PROJECT TO VERIFY THE SCOPE OF WORK WITH FIELD CONDITIONS. PARTICULAR ATTENTION SHOULD BE GIVEN TO NEW CONDUIT RUNS IN EXISTING BUILDING.
23. EQUIPMENT LOCKOUTS SHALL BE IN STRICT ACCORDANCE WITH OWNER'S REQUIREMENTS.
24. CONTRACTOR SHALL COORDINATE ALL UTILITY WORK. CONTRACTOR SHALL OBTAIN PG&E APPROVAL FOR ALL WORK AND EQUIPMENT PRIOR TO COMMENCING OR PURCHASING. CONTRACTOR SHALL FURNISH INSTALL AND CONNECT ALL SUBSTRUCTURES, CONDUITS, PULL ROPES, POLES AND CONCRETE PADS NECESSARY TO INSTALL PG&E EQUIPMENT. PG&E SHALL PULL AND TERMINATE NECESSARY CONDUCTORS.

REGISTERED PROFESSIONAL ENGINEER CHARLES M. REYNOLDS No. E011791 Exp. 9-30-04 ELECTRICAL STATE OF CALIFORNIA
05 FEB 2004

REV	DATE	BY	DESCRIPTION

SCALE: NONE

WARNING: 0 1/2 1 — IF THIS BAR DOES NOT MEASURE 1" THEN DRAWING IS NOT TO SCALE

DESIGNED A. P. SORLEY
DRAWN A. P. SORLEY
CHECKED K. A. CREAGER

SUBMITTED BY
JOHN A. BERGEN — C31069 LICENSE NO. — 2/16/2004 DATE
STEVE J. HYLAND — C23892 LICENSE NO. — 2/16/2004 DATE

DIGALERT — DIAL TOLL FREE 1-800-642-2444 AT LEAST TWO DAYS BEFORE YOU DIG — UNDERGROUND SERVICE ALERT OF NORTHERN CALIFORNIA

LOS OSOS COMMUNITY SERVICES DISTRICT

MWH Walnut Creek, California

LOS OSOS WASTEWATER PROJECT
ELECTRICAL
STANDARD ELECTRICAL ABBREVIATIONS & GENERAL NOTES

SHEET BC-GE-002

Job No: 1481166 File: N:\Projects\los_osos\Collect_Sys\PS\ele\BC-GE-002.dgn Plot Date: 08-FEB-2004 11:02

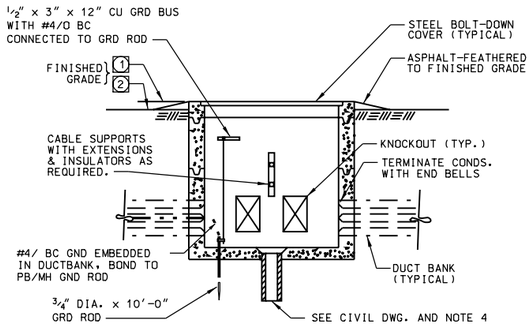

NOTES:

1. AT PAVED AREAS
2. UNPAVED AREAS.
3. PULL BOX INSTALLATION TO BE WATERTIGHT AFTER CONDUITS HAVE BEEN INSTALLED BY USING RAYCHEM RAYFLATE DUCT SEALING SYSTEM RDSS OR EQUAL.
4. FOR MANHOLE/PULL BOX NOT SHOWN WITH DRAINAGE PIPING ON CIVIL DRAWINGS, PROVIDE A MINIMUM OF 5FT OF 4" PD TO A 5FT CUBED TYPE DRAIN ROCK WITH FILTER FABRIC AROUND.

TYPICAL PULLBOX/MANHOLE — E-102

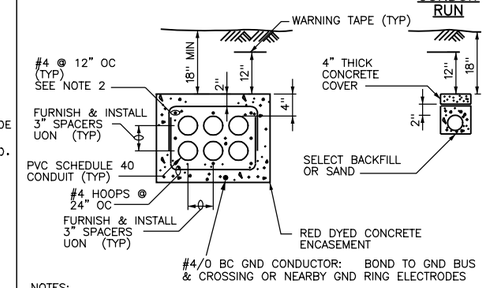

NOTES:

1. REFER TO DRAWINGS FOR ACTUAL CONDUIT SIZE AND NUMBER.
2. AT INTERSECTIONS WITH STRUCTURES HOOK #4'S INTO THE FOOTING OR WALL (TYP)

TYPICAL DUCTBANK ENCASEMENT/REINFORCEMENT — E-103

REV 030730

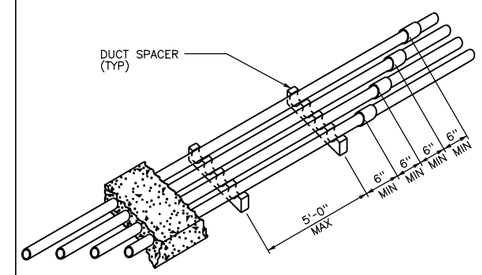

TYPICAL DUCTBANK JOINT/SUPPORT SPACING — E-108

REV 042999

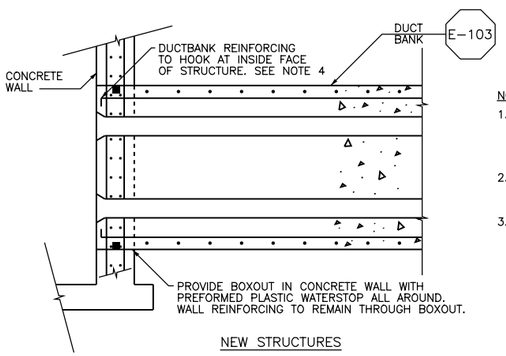

NOTES:

1. NO DUCTBANKS OR CONDUIT SHALL PENETRATE THROUGH ANY WALL FOOTINGS OR GRADE BEAMS WHEN ENTERING OR LEAVING STRUCTURES.
2. ALL DUCTBANKS SHALL BE DOWELED INTO STRUCTURES USING THE DETAILS SHOWN ON THIS SHEET.
3. WHERE DUCTBANKS PASS BENEATH FOOTINGS OF EXISTING BUILDING, THE FOOTING SHALL BE UNDERPINNED OR OTHERWISE PROTECTED FROM SETTLEMENT OR OTHER DAMAGE. OVER EXCAVATION BENEATH FOOTINGS DURING DUCTBANK INSTALLATION SHALL BE REPLACED WITH LEAN CONCRETE. LEAN CONCRETE SHALL BE SEPARATED FROM THE DUCTBANK CONCRETE WITH 3/4 " EXPANSION JOINT FILLER.
4. IN SEISMIC ZONES 0, 1 AND 2, DUCTBANK REINFORCING CAN BE DRILLED AND GROUTED PER THE "EXISTING STRUCTURES" DETAIL.

DUCTBANK TIE IN

REV 010901 — E-109

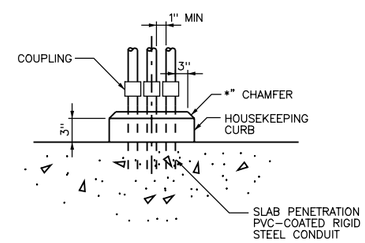

NOTE:

HOUSEKEEPING CURB REQUIRED AT ALL INTERIOR WALL LOCATIONS FOR SINGLE AND MULTIPLE RISERS.

CONCRETE HOUSEKEEPING CURB NON-HAZARDOUS LOCATIONS — E-203

REV 063099

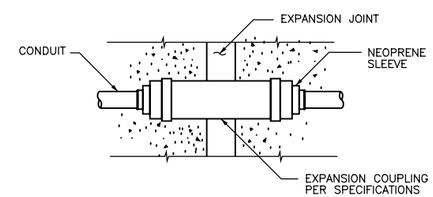

NOTE:

PROVIDE EXTERNAL BONDING JUMPER WITH METALLIC CONDUIT AND WHEN COUPLING HAS NO INTERNAL JUMPER.

EXPANSION COUPLING — E-204

REV 042999

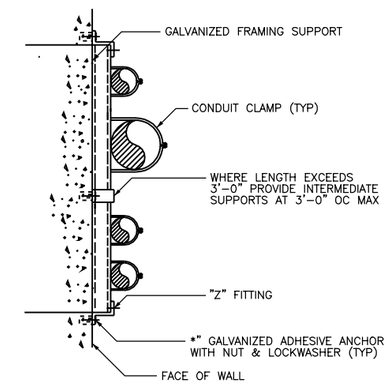

CONDUIT SUPPORT FLUSH MOUNT — E-212

REV 042599

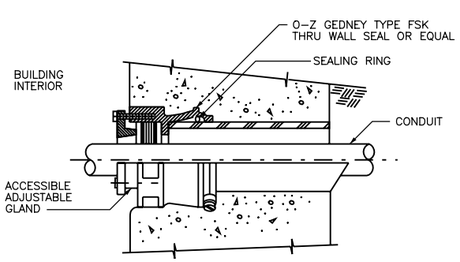

NOTE:

USE WATERTIGHT CONDUIT SEAL WHERE CONDUIT PENTRATIONS OF EXTERIOR WALLS ARE BELOW GRADE.

WATERTIGHT CONDUIT SEAL BELOW GRADE EXTERIOR WALLS — E-213

REV 042599

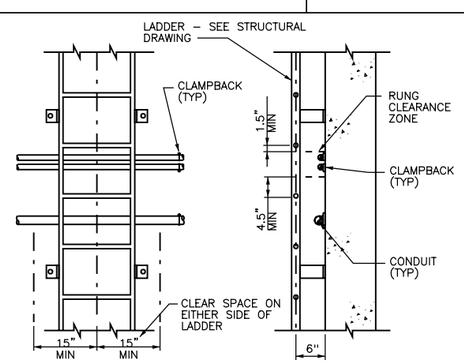

NOTE:

0.50" CLAMPBACK - DAMP OR BELOW GRADE
0.25" CLAMPBACK - DRY AND ABOVE GRADE

MINIMUM LADDER CLEARANCES — E-220

REV 072301

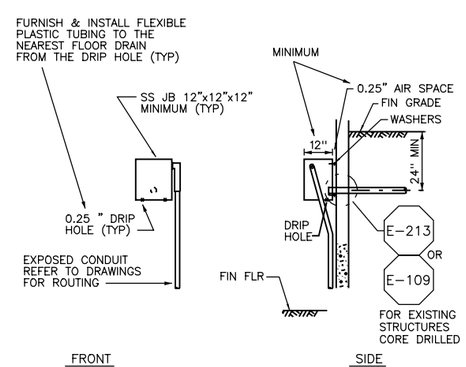

CONDUIT ENTRANCE PULLBOX — E-226

REV 030725

REQUIRED FOR BELOW GRADE CONDUIT WALL ENTRY

REGISTERED PROFESSIONAL ENGINEER CHARLES M. REYNOLDS No. E011791 Exp. 9-30-04 ELECTRICAL STATE OF CALIFORNIA

05 FEB 2004

REV	DATE	BY	DESCRIPTION

SCALE: NONE

WARNING: 0 1/2 1 — IF THIS BAR DOES NOT MEASURE 1" THEN DRAWING IS NOT TO SCALE

DESIGNED A. P. SORLEY
DRAWN A. P. SORLEY
CHECKED K. A. CREAGER

SUBMITTED BY
JOHN A. BERGEN — C31069 — LICENSE NO. — 2/16/2004 — DATE
STEVE J. HYLAND — C23892 — LICENSE NO. — 2/16/2004 — DATE

DIGALERT — DIAL TOLL FREE 1-800-642-2444 AT LEAST TWO DAYS BEFORE YOU DIG — UNDERGROUND SERVICE ALERT OF NORTHERN CALIFORNIA

LOS OSOS COMMUNITY SERVICES DISTRICT

MWH Walnut Creek, California

LOS OSOS WASTEWATER PROJECT

ELECTRICAL
STANDARD ELECTRICAL DETAILS - 1

SHEET BC-GE-003

Plot Date: 08-FEB-2004 11:03
File: N:\Projects\los_osos\Collect_Sys\PS\ele\BC-GE-003.dgn
Job No: 1481166

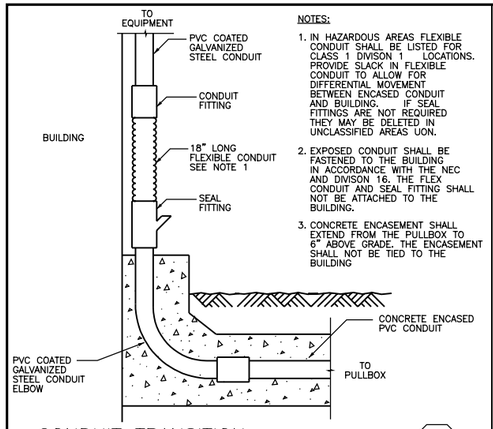

NOTES:

1. IN HAZARDOUS AREAS FLEXIBLE CONDUIT SHALL BE LISTED FOR CLASS 1 DIVISON 1 LOCATIONS. PROVIDE SLACK IN FLEXIBLE CONDUIT TO ALLOW FOR DIFFERENTIAL MOVEMENT BETWEEN ENCASED CONDUIT AND BUILDING. IF SEAL FITTINGS ARE NOT REQUIRED THEY MAY BE DELETED IN UNCLASSIFIED AREAS UON.
2. EXPOSED CONDUIT SHALL BE FASTENED TO THE BUILDING IN ACCORDANCE WITH THE NEC AND DIVISON 16. THE FLEX CONDUIT AND SEAL FITTING SHALL NOT BE ATTACHED TO THE BUILDING.
3. CONCRETE ENCASEMENT SHALL EXTEND FROM THE PULLBOX TO 6" ABOVE GRADE. THE ENCASEMENT SHALL NOT BE TIED TO THE BUILDING

CONDUIT TRANSITION

REV 072301 — E-230

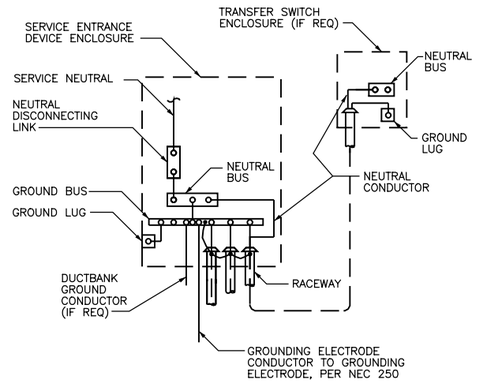

SERVICE GROUNDING

NON-SEPARATELY DERIVED SOURCE

REV 061799 — E-300

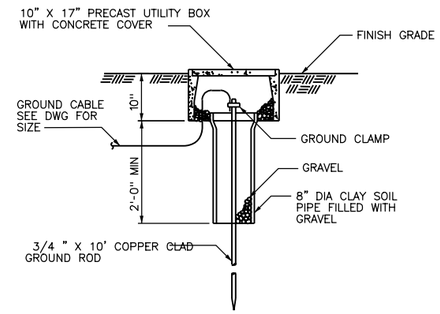

GROUND ROD AND WELL

REV 041099 — E-303

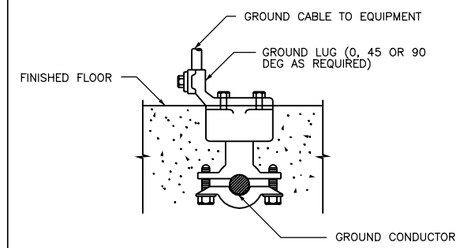

NOTE:

ALL BOLTS SHALL BE INSERTED IN BOLT HOLES BEFORE THE INSERT IS EMBEDDED.

GROUNDING INSERT

REV 050199 — E-308

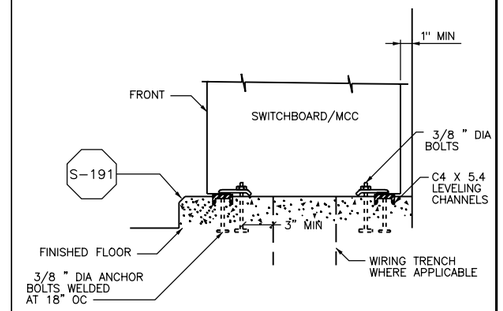

SWITCHBOARD/MCC MOUNTING

REV 072301 — E-400

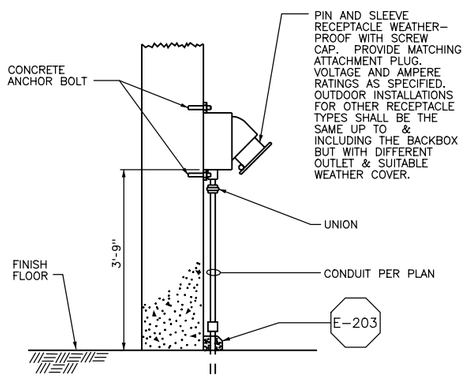

RECEPTACLE INSTALLATION

NON-HAZARDOUS LOCATIONS

REV 030725 — E-419

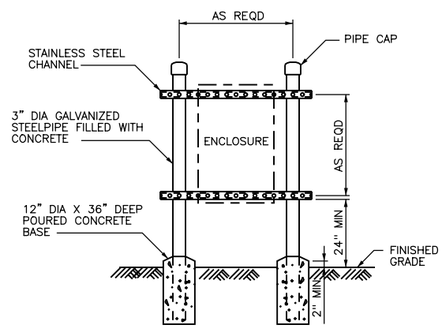

ENCLOSURE MOUNTING STAND

REV 041399 — E-420

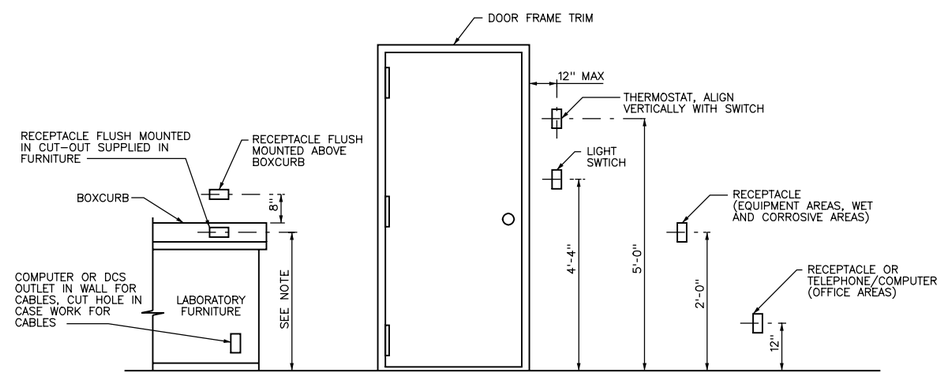

NOTE:

CONTRACTOR SHALL DETERMINE OUTLET BOX MOUNTING HEIGHT TO SUIT LABORATORY EQUIPMENT FURNISHED FOR INSTALLATION

OUTLET BOX MOUNTING

REV 072301 — E-450

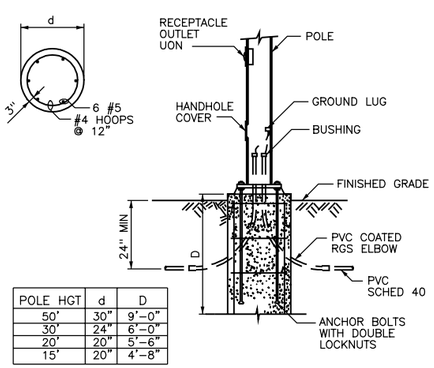

POLE HGT	d	D
50'	30"	9'-0"
30'	24"	6'-0"
20'	20"	5'-6"
15'	20"	4'-8"

POLE FOUNDATION

REV 072301 — E-600

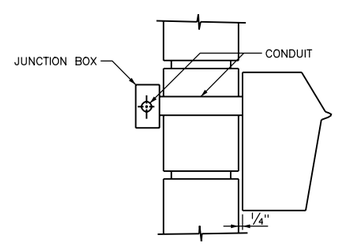

NOTES:

PROVIDE GASKET BETWEEN FIXTURE AND CONDUIT. INSTALLATION SHALL BE WATERTIGHT.

WALL MOUNT FIXTURE

EXTERIOR WALL

REV 050199 — E-605

REGISTERED PROFESSIONAL ENGINEER CHARLES M. REYNOLDS No. E011791 Exp. 9-30-04 ELECTRICAL STATE OF CALIFORNIA

05 FEB 2004

REV	DATE	BY	DESCRIPTION

SCALE: NONE

WARNING: 0 1/2 1 — IF THIS BAR DOES NOT MEASURE 1" THEN DRAWING IS NOT TO SCALE

DESIGNED A. P. SORLEY
DRAWN A. P. SORLEY
CHECKED K. A. CREAGER

SUBMITTED BY
JOHN A. BERGEN — C31069 LICENSE NO. — 2/16/2004 DATE
STEVE J. HYLAND — C23892 LICENSE NO. — 2/16/2004 DATE

DIGALERT — DIAL TOLL FREE 1-800-642-2444 AT LEAST TWO DAYS BEFORE YOU DIG — UNDERGROUND SERVICE ALERT OF NORTHERN CALIFORNIA

LOS OSOS COMMUNITY SERVICES DISTRICT

MWH Walnut Creek, California

LOS OSOS WASTEWATER PROJECT

ELECTRICAL
STANDARD ELECTRICAL DETAILS – 2

SHEET BC-GE-004

Plot Date: 08-FEB-2004 11:04
File: N:\Projects\los_osos\Collect_Sys\PS\ele\BC-GE-004.dgn
Job No: 1481166

1. DETAIL IS TYPICAL FOR PUMP STATIONS AND FOR POCKET PUMP STATIONS.
2. DETAIL ALSO USED FOR INSTRUMENTS IN BOTH THE WET WELL AND THE VALVE VAULT.

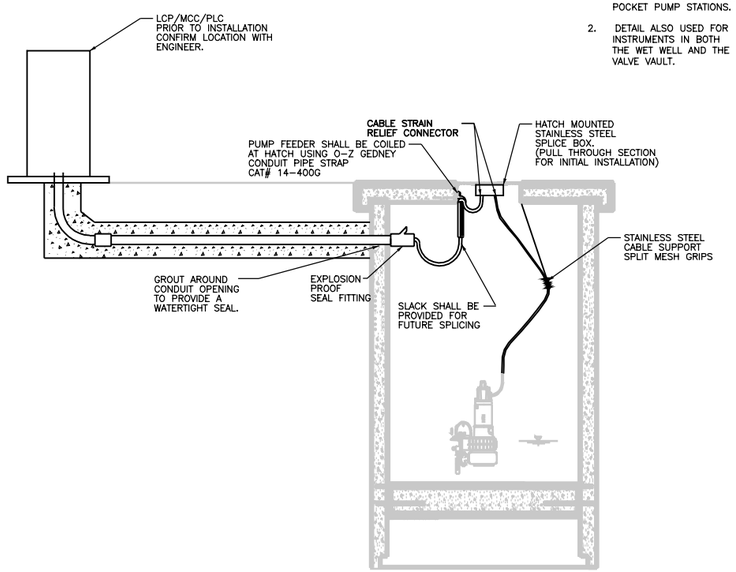

WET WELL DETAIL
TRANSITION FROM HAZARDOUS TO NON-HAZARDOUS LOCATIONS

E-650

MINI POWER CENTER SCHEDULE (TYP)

120/240 VOLTS — 1 PH
70 A MAIN BREAKER — 3 W, 125 A
PANELBOARD: MPC — LOCATION: TYPICAL
FEED: BOTTOM — MOUNTING: SURFACE

LOAD DESCRIPTION	KVA PH A	KVA PH B	LTG	REC	MIS	CIR	BKR		BKR	CIR	MIS	REC	LTG	KVA PH A	KVA PH B	LOAD DESCRIPTION
LIGHTING	0.512		X			1	20		20	2		X		0.720		RECEPTACLE
LIGHTING		0.512	X			3	20		20	4	X				1.5	EXHAUST FAN SYSTEM
PLC	1.0				X	5	20		20	6		X		0.180		IRRIGATION CONTROLLER
LIT		0.5			X	7	20		20	8					1.92	BATTERY CHARGER
SPARE						9	20		20	10						SPARE
SPARE						11	20		20	12						SPARE
WATER HEATER	1.92					13	20		20	14						SPARE
		1.92				15	2P		2P	16						
SPARE						17	20		20	18						SPARE
						19	2P		2P	20						
	3.432	2.932				TOTAL			TOTAL					0.900	3.42	
	PHASE LOAD								TOTAL LOAD							
	4.332	6.352							10.684 KVA							

SEE NOTE 1.

MINI POWER CENTER SCHEDULE (WEST PASO PS)

120/240 VOLTS — 1 PH
70 A MAIN BREAKER — 3 W, 125 A
PANELBOARD: MPC — LOCATION: WEST PASO PS
FEED: BOTTOM — MOUNTING: SURFACE

LOAD DESCRIPTION	KVA PH A	KVA PH B	LTG	REC	MIS	CIR	BKR		BKR	CIR	MIS	REC	LTG	KVA PH A	KVA PH B	LOAD DESCRIPTION
LIGHTING	0.128		X			1	20		20	2		X		0.180		RECEPTACLE
EXHAUST FAN SYSTEM		1.738			X	3	20		20	4	X				1.738	EXHAUST FAN SYSTEM
EXHAUST FAN SYSTEM	1.738				X	5	20		20	6	X			1.738		EXHAUST FAN SYSTEM
EXHAUST FAN SYSTEM		1.738			X	7	20		20	8	X				1.738	EXHAUST FAN SYSTEM
PLC	1.0				X	9	20		20	10		X		0.180		IRRIGATION CONTROLLER
LIT		0.5			X	11	20		20	12					1.0	SPACE HEATER ENCLOSURE
SPACE HEATER VFD	1.0					13	20		20	14						SPARE
SPARE						15	20		20	16						SPARE
SPARE						17	20		20	18						SPARE
						19	2P		2P	20						
	3.866	3.976				TOTAL			TOTAL					2.098	4.476	
	PHASE LOAD								TOTAL LOAD							
	5.964	8.452							14.42 KVA							

NOTES:

1. EAST PASO HARVEST WELL SHALL HAVE ALL 120V EQUIPMENT POWERED FROM THE EAST PASO MPC LOCATED IN THE STANDBY POWER FACILITY. BREAKERS MUST BE ALLOCATED FOR THIS LOAD.
2. THE PANEL SCHEDULES ARE SHOWING TYPICAL LOADS FOR DIFFERENT LOCATIONS. IF A UNIT REQUIRING 120V IS NOT SHOWN ON THESE PANELS USE A SPARE BREAKER. 3/4"C; (2)#12 & 1#12 GND MIN CONDUIT & WIRE SHALL BE USED TO CONNECT THE DEVICE. IF A DEVICE IS SHOWN THAT IS NOT NEEDED MAKE THE DESIGNATED BREAKER SPARE.

REGISTERED PROFESSIONAL ENGINEER — CHARLES M. REYNOLDS — No. E011791 — Exp. 9-30-04 — ELECTRICAL — STATE OF CALIFORNIA
05 FEB 2004

Job No: 1481166 File: N:\Projects\los_osos\Collect_Sys\PS\ele\BC-GE-005.dgn Plot Date: 08-FEB-2004 11:05

REV	DATE	BY	DESCRIPTION

SCALE: NONE
WARNING: 0 1/2 1 — IF THIS BAR DOES NOT MEASURE 1" THEN DRAWING IS NOT TO SCALE

DESIGNED A. P. SORLEY
DRAWN A. P. SORLEY
CHECKED K. A. CREAGER

SUBMITTED BY
JOHN A. BERGEN — C31069 — LICENSE NO. — 2/16/2004 — DATE
STEVE J. HYLAND — C23892 — LICENSE NO. — 2/16/2004 — DATE

DIGALERT — DIAL TOLL FREE 1-800-642-2444 AT LEAST TWO DAYS BEFORE YOU DIG — UNDERGROUND SERVICE ALERT OF NORTHERN CALIFORNIA

LOS OSOS COMMUNITY SERVICES DISTRICT

MWH Walnut Creek, California

LOS OSOS WASTEWATER PROJECT
ELECTRICAL
STANDARD ELECTRICAL DETAILS & PANEL SCHEDULES

SHEET BC-GE-005

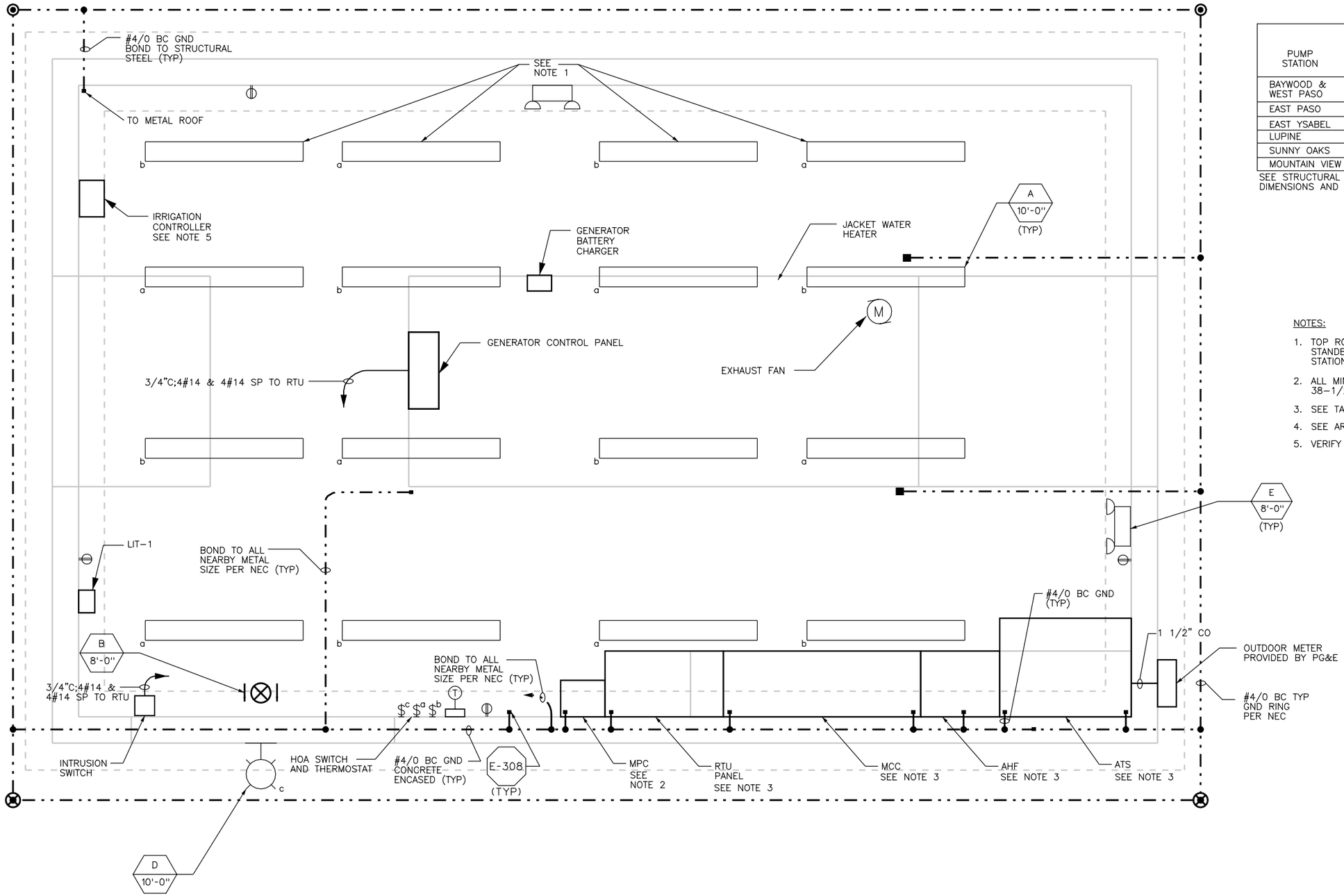

TABLE 2

STANDBY POWER FACILITIES

PUMP STATION	MCC DIMENSIONS (H,W,D)	ATS DIMENSIONS (H,W,D)	ACTIVE HARMONIC FILTER DIMENSIONS (H,W,D)	RTU UNIT DIMENSIONS (H,W,D)
BAYWOOD & WEST PASO	90",60",20"	90",46",30"	86",24",20"	36",36",20"
EAST PASO	90",60",20"	90",48",20"		36",36",20"
EAST YSABEL	90",40",20"	90",40",20"		36",36",20"
LUPINE	90",60",20"	90",48",20"	49",16",14"	36",36",20"
SUNNY OAKS	90",40",20"	90",40",20"		36",36",20"
MOUNTAIN VIEW	90",40",20"	90",40",20"		36",36",20"

SEE STRUCTURAL DRAWINGS FOR BUILDING DIMENSIONS AND GENERATOR LOCATIONS

NOTES:

1. TOP ROW OF LIGHTS ONLY EXIST IN WEST PASO/BAYWOOD STANDBY POWER STATION. ALL OTHER STANDBY POWER STATIONS WILL HAVE 3 ROWS OF 4 FLUORESCENT LIGHTS.
2. ALL MINI POWER CENTERS (MPC) WILL BE 38–1/2"H,13–1/2"W,11–7/8"D
3. SEE TABLE 2 FOR EQUIPMENT DIMENSIONS
4. SEE AREA SINGLE LINE FOR CONDUIT AND CABLE SIZES.
5. VERIFY LOCATION OF CONTROLLER WITH IRRIGATION DWGS.

REGISTERED PROFESSIONAL ENGINEER
CHARLES M. REYNOLDS
No. E011791
Exp. 9-30-04
ELECTRICAL
STATE OF CALIFORNIA
05 FEB 2004

REV	DATE	BY	DESCRIPTION

SCALE: 3/4" = 1' 0"

WARNING: 0 1/2 1 — IF THIS BAR DOES NOT MEASURE 1" THEN DRAWING IS NOT TO SCALE

DESIGNED A. P. SORLEY
DRAWN A. P. SORLEY
CHECKED K. A. CREAGER

SUBMITTED BY
JOHN A. BERGEN — C31069 LICENSE NO. — 2/16/2004 DATE
STEVE J. HYLAND — C23892 LICENSE NO. — 2/16/2004 DATE

DIGALERT — DIAL TOLL FREE 1-800-642-2444 AT LEAST TWO DAYS BEFORE YOU DIG — UNDERGROUND SERVICE ALERT OF NORTHERN CALIFORNIA

LOS OSOS COMMUNITY SERVICES DISTRICT

MWH Walnut Creek, California

LOS OSOS WASTEWATER PROJECT
ELECTRICAL
STANDBY POWER BUILDING – TYPICAL
ELECTRICAL POWER, LIGHTING & GROUNDING PLAN

SHEET BC–E–200

Job No: 1481166 File: N:\Projects\los_osos\Collect_Sys\PS\ele\BC-E-200.dgn Plot Date: 08-FEB-2004 11:05

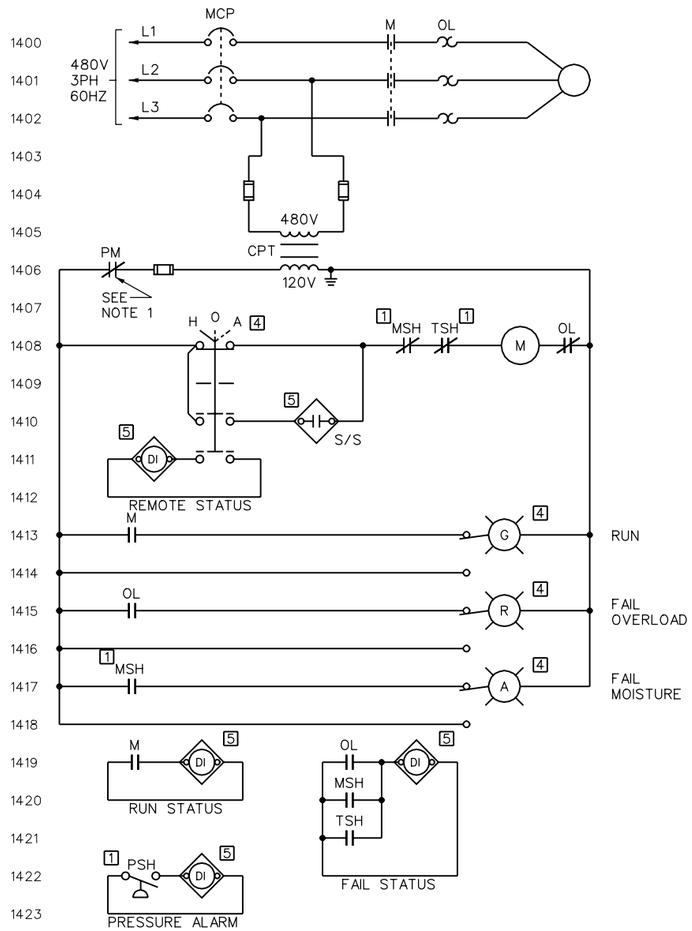

SUBMERSIBLE PUMP STATIONS

BAYWOOD, EAST PASO, EAST YSABEL & SUNNY OAKS PS

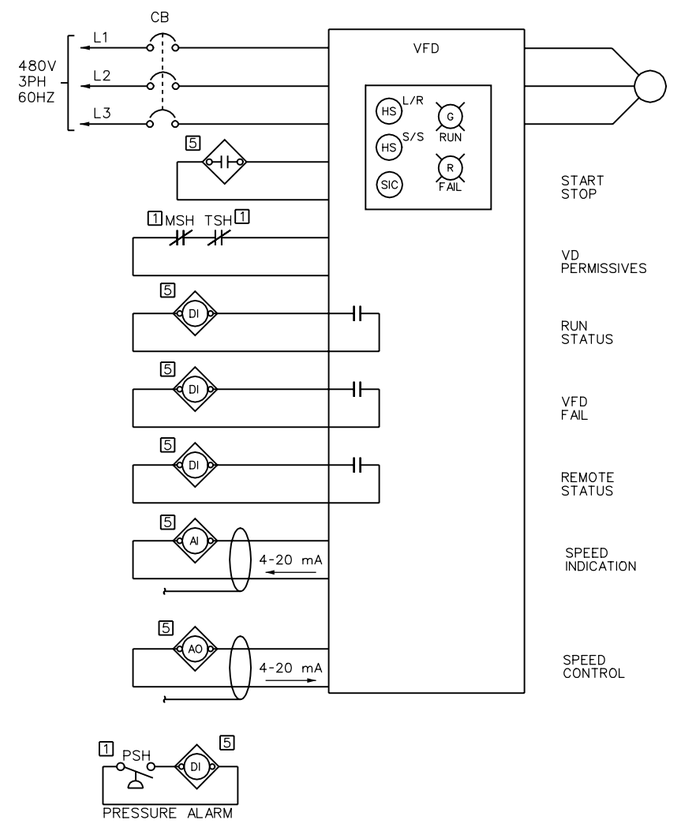

SUBMERSIBLE PUMP STATIONS

LUPINE PS AND WEST PASO PS

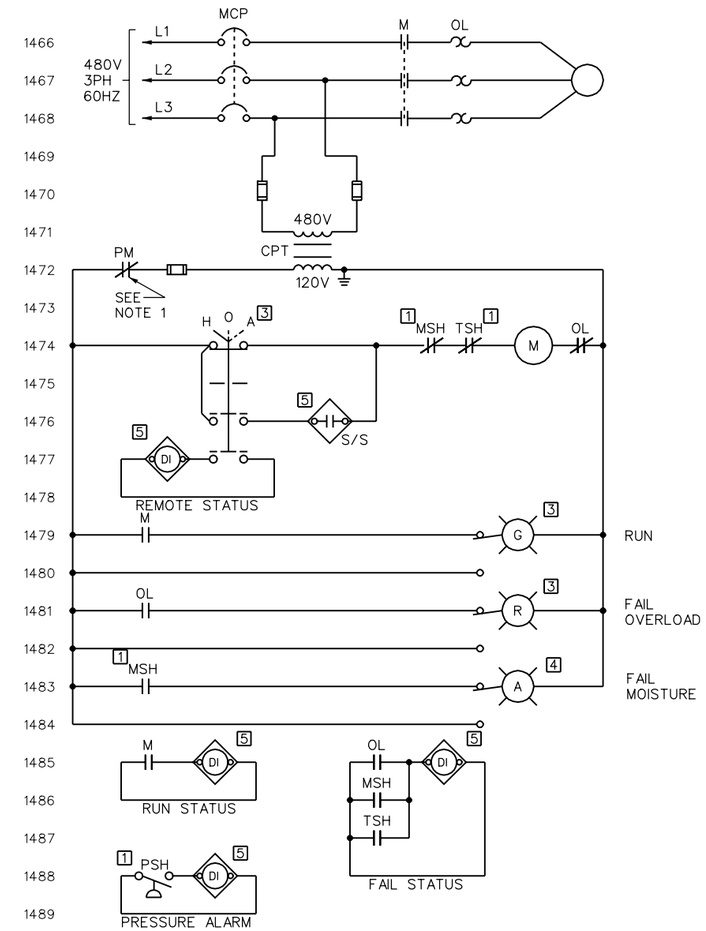

SUBMERSIBLE PUMP STATIONS

MOUTAIN VIEW PS

NOTES:

1. EACH SUBMERSIBLE PUMP STATION SHALL CONTAIN A THREE PHASE MONITOR. A NORMALLY CLOSED CONTACT SHALL BE PLACED IN EVERY PUMP MOTOR CONTROLLER.

LOCATION LEGEND

1 FIELD
2 LCS
3 LCP
4 MCC
5 PLC

REGISTERED PROFESSIONAL ENGINEER CHARLES M. REYNOLDS No. E011791 Exp. 9-30-04 ELECTRICAL STATE OF CALIFORNIA

05 FEB 2004

REV	DATE	BY	DESCRIPTION

SCALE: NO SCALE

WARNING: 0 1/2 1 — IF THIS BAR DOES NOT MEASURE 1" THEN DRAWING IS NOT TO SCALE

DESIGNED A. P. SORLEY
DRAWN A. P. SORLEY
CHECKED K. A. CREAGER

SUBMITTED BY
JOHN A. BERGEN — C31069 LICENSE NO. — 2/16/2004 DATE
STEVE J. HYLAND — C23892 LICENSE NO. — 2/16/2004 DATE

DIGALERT — DIAL TOLL FREE 1-800-642-2444 AT LEAST TWO DAYS BEFORE YOU DIG — UNDERGROUND SERVICE ALERT OF NORTHERN CALIFORNIA

LOS OSOS COMMUNITY SERVICES DISTRICT

MWH Walnut Creek, California

LOS OSOS WASTEWATER PROJECT

ELECTRICAL
PS & STANDBY POWER
TYPICAL CONTROL DIAGRAM 1

SHEET BC-E-201

Job No: 1481166 File: N:\Projects\los_osos\Collect_Sys\PS\ele\BC-E-201.dgn Plot Date: 08-FEB-2004 11:05

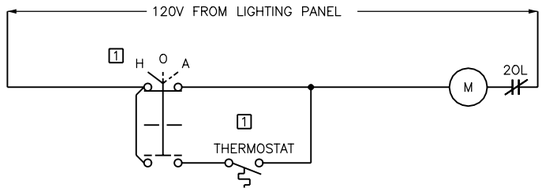

STANDBY POWER BLDG EXHAUST FAN

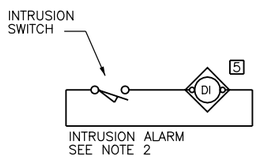

INTRUSION ALARM SYSTEM

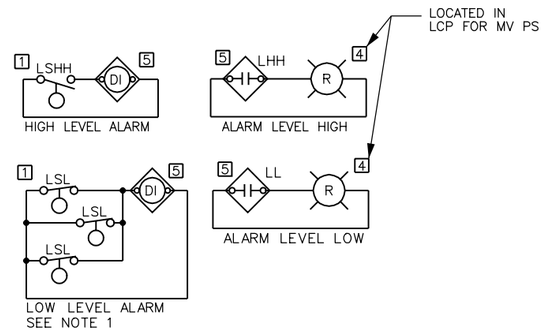

SUBMERSIBLE PUMP STATIONS

(TYP FOR EACH WET WELL)

1. LOW LEVEL SWITCHES ARE LOCATED ON EACH SUBMERSIBLE PUMP. FOR DUPLEX SUBMERSIBLE PUMP STATIONS THE 3RD LSL SHOWN SHALL BE DISREGARDED.

2. A INTRUSION ALARM SHALL BE INSTALLED AT THE WET WELL, VALVE VAULT, LCP DOOR AND STANDBY POWER FACILTITY DOOR FOR EACH SUBMERSIBLE PUMP STATION. IF MORE THAN ONE SWITCH EXISTS AN AREA COMBINE SWITCHES IN PARALLEL FOR ONE INPUT BACK TO PLC.

LOCATION LEGEND

1 FIELD
2 LCS
3 LCP
4 MCC
5 PLC

REGISTERED PROFESSIONAL ENGINEER CHARLES M. REYNOLDS No. E011791 Exp. 9-30-04 ELECTRICAL STATE OF CALIFORNIA
05 FEB 2004

REV	DATE	BY	DESCRIPTION

SCALE: NO SCALE

WARNING: 0 1/2 1 — IF THIS BAR DOES NOT MEASURE 1" THEN DRAWING IS NOT TO SCALE

DESIGNED A. P. SORLEY
DRAWN A. P. SORLEY
CHECKED K. A. CREAGER

SUBMITTED BY
JOHN A. BERGEN — C31069 LICENSE NO. — 2/16/2004 DATE
STEVE J. HYLAND — C23892 LICENSE NO. — 2/16/2004 DATE

DIGALERT — DIAL TOLL FREE 1-800-642-2444 AT LEAST TWO DAYS BEFORE YOU DIG — UNDERGROUND SERVICE ALERT OF NORTHERN CALIFORNIA

LOS OSOS COMMUNITY SERVICES DISTRICT

MWH Walnut Creek, California

LOS OSOS WASTEWATER PROJECT
ELECTRICAL
PS & STANDBY POWER
TYPICAL CONTROL DIAGRAM 2

SHEET BC-E-202

Job No: 1481166 File: N:\Projects\los_osos\Collect_Sys\PS\ele\BC-E-202.dgn Plot Date: 08-FEB-2004 11:06

NOTES:

1. CONTRACTOR SHALL PROVIDE ONE (1) 4"C WITH PULL ROPE BETWEEN EACH MANHOLE. CONDUIT SHALL BE PLACED IN SAME TRENCH AS THE SITE PIPING. CONTRACTOR SHALL COORDINATE WITH CIVIL FOR DUCTBANK LAYOUT. SEE CIVIL DRAWINGS FOR TRENCH LOCATIONS.
2. EACH MANHOLE SHALL HAVE MINIMUM INSIDE DIMENSIONS OF 3'0"L x 5'0"W x 6'0"D.
3. CONTRACTOR PROVIDE CONDUIT AND MANHOLES AS SHOWN FROM AREA A TO MH-12 AT NORTHERN PROPERTY LINE OF THE WWTP. CONTACTOR SHALL PROVIDE CONDUIT AND MANHOLES FROM LOCSD BLDG TO MH-13. WWTP CONTRACTOR WILL INSTALL CONDUIT FROM MH-12 TO WWTP AND FROM MH-13 TO WWTP.

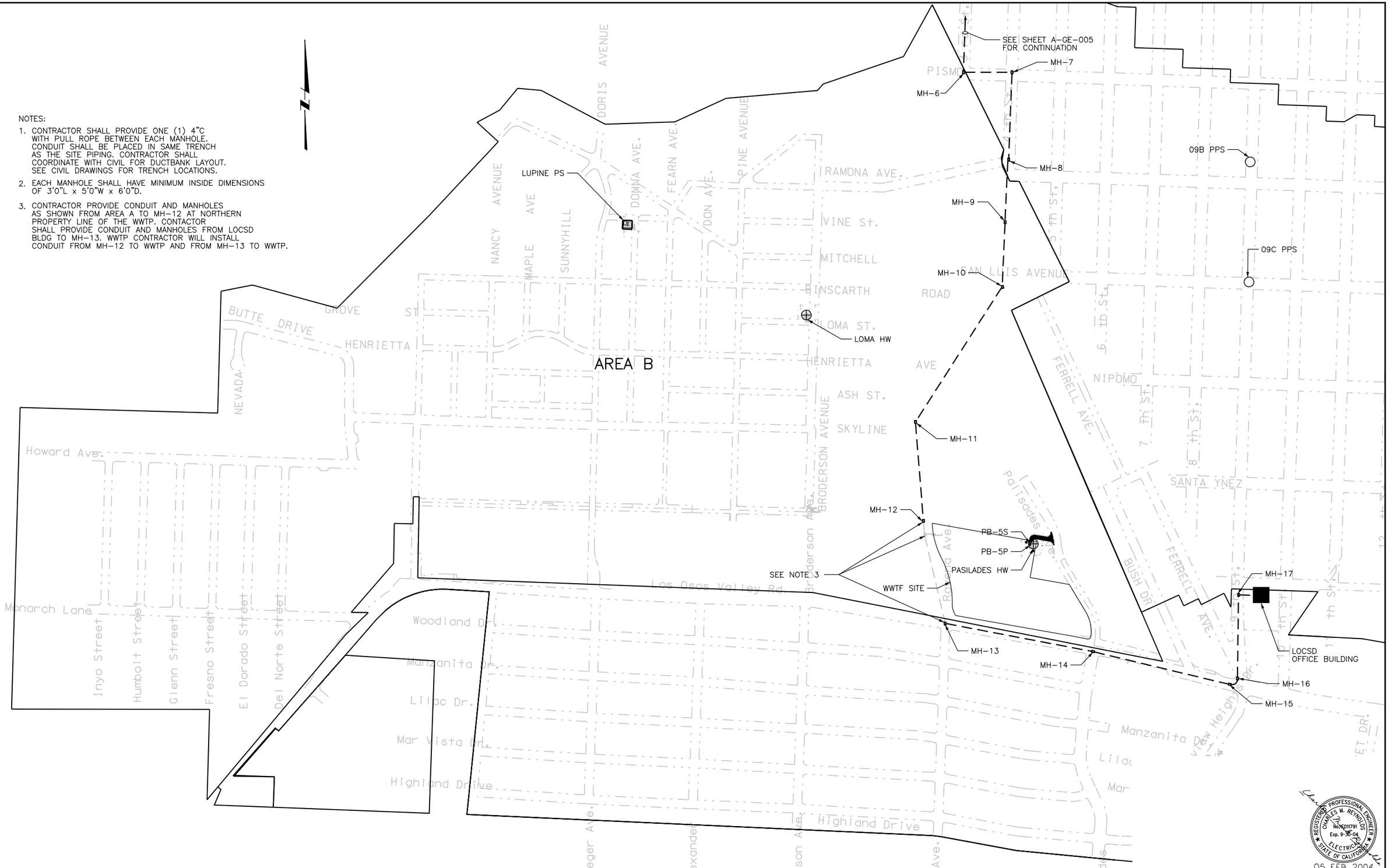

05 FEB 2004

REV	DATE	BY	DESCRIPTION

SCALE: 1' = 300'

WARNING: 0 1/2 1 — IF THIS BAR DOES NOT MEASURE 1" THEN DRAWING IS NOT TO SCALE

DESIGNED A. P. SORLEY
DRAWN A. P. SORLEY
CHECKED K. A. CREAGER

SUBMITTED BY
JOHN A. BERGEN — C31069 LICENSE NO. — 2/16/2004 DATE
STEVE J. HYLAND — C23892 LICENSE NO. — 2/16/2004 DATE

DIGALERT — DIAL TOLL FREE 1-800-642-2444 AT LEAST TWO DAYS BEFORE YOU DIG — UNDERGROUND SERVICE ALERT OF NORTHERN CALIFORNIA

LOS OSOS COMMUNITY SERVICES DISTRICT

MWH Walnut Creek, California

LOS OSOS WASTEWATER PROJECT

ELECTRICAL
GENERAL AREA PLAN
AREA B

SHEET B-E-200

Job No: 1481166 File: \\uswck1s02\nwdd\projects\los_osos\collect_sys\PS\ele\B-E-200.dgn Plot Date: 08-FEB-2004 11:34

NOTES:

1. CONTRACTOR SHALL PROVIDE 4"C FROM PG&E PROVIDED POLE MOUNTED XFMR TO THE MAIN SERVICE ENTRANCE. PG&E SHALL PROVIDE CONDUCTOR PER PG&E SPECIFICATIONS. CONTRACTOR MUST RECEIVE PG&E APPROVAL PRIOR TO CONSTRUCTION
2. POWER/CONTROL DUCTBANK SHALL CONTAIN (3)[2"CO; FEEDER SHALL BE PROVIDED BY PUMP VENDOR], [1"C; (16)#14 & (16)#14 SP], [1"C; (2)#10 & (1)#10 GND] & (1)1"CO SIGNAL DUCTBANK SHALL CONTAIN [1"CO; CABLE PROVIDED BY MANUFACTURER]. CONTRACTOR SHALL MAINTAIN 12" SEPARATION BETWEEN DUCTBANKS.
3. CONTROL DUCTBANK SHALL CONTAIN: 1"C; (8)#14, (8)#14 SP & (1)#12 GND

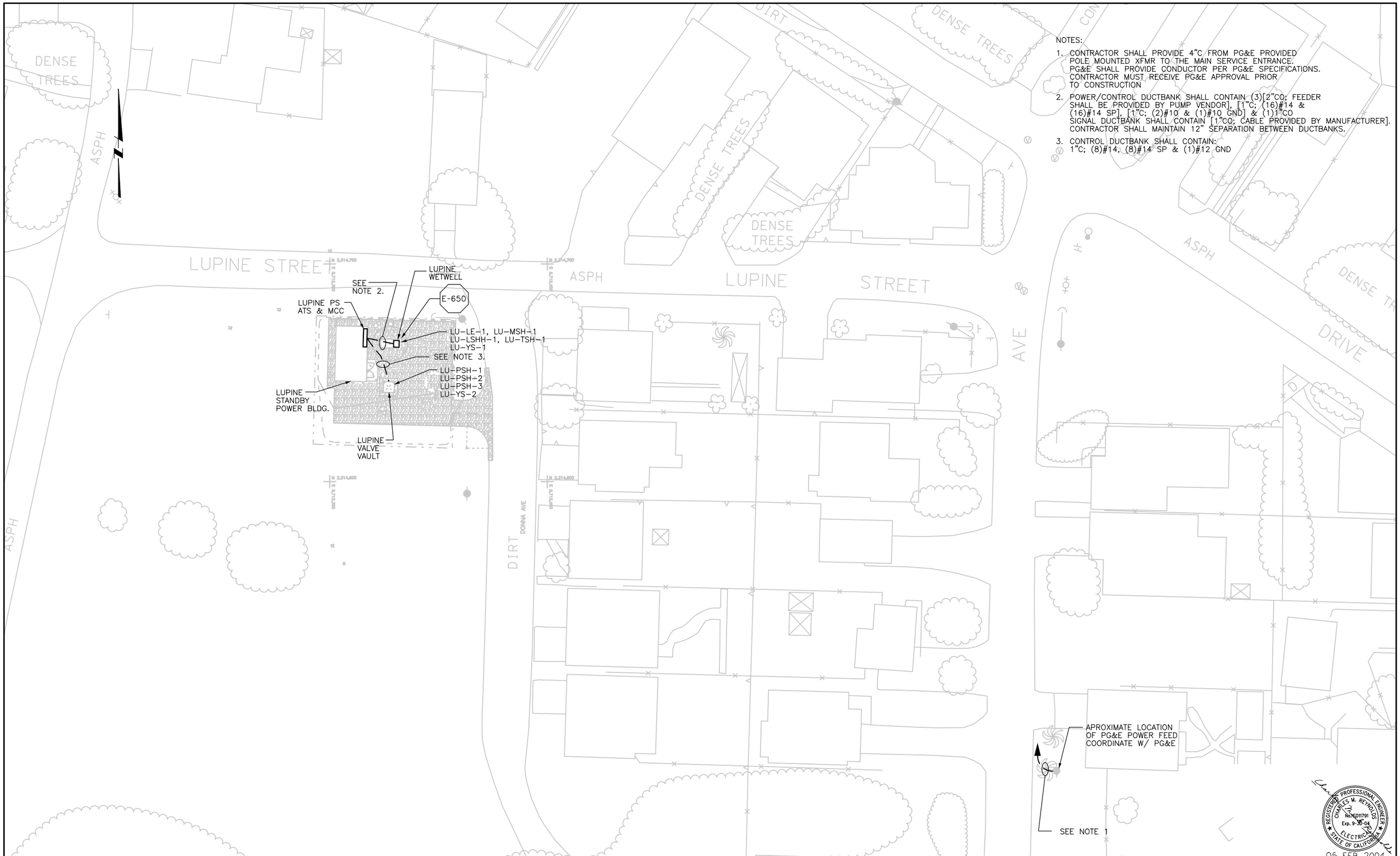

REGISTERED PROFESSIONAL ENGINEER CHARLES M. REYNOLDS No. E011791 Exp. 9-30-04 ELECTRICAL STATE OF CALIFORNIA

05 FEB 2004

REV	DATE	BY	DESCRIPTION

SCALE: 1" = 20'

WARNING: 0 1/2 1 — IF THIS BAR DOES NOT MEASURE 1" THEN DRAWING IS NOT TO SCALE

DESIGNED A. P. SORLEY
DRAWN A. P. SORLEY
CHECKED K. A. CREAGER

SUBMITTED BY
JOHN A. BERGEN — C31069 LICENSE NO. — 2/16/2004 DATE
STEVE J. HYLAND — C23892 LICENSE NO. — 2/16/2004 DATE

DIGALERT — DIAL TOLL FREE 1-800-642-2444 AT LEAST TWO DAYS BEFORE YOU DIG — UNDERGROUND SERVICE ALERT OF NORTHERN CALIFORNIA

LOS OSOS COMMUNITY SERVICES DISTRICT

MWH Walnut Creek, California

LOS OSOS WASTEWATER PROJECT
ELECTRICAL
LUPINE SUBMERSIBLE PUMP STATION SITE
ELECTRICAL POWER, LIGHTING & GROUNDING PLAN

SHEET B-E-201

Job No: 1481166 File: N:\Projects\los_osos\Collect_Sys\PS\ele\B-E-201.dgn Plot Date: 08-FEB-2004 11:07

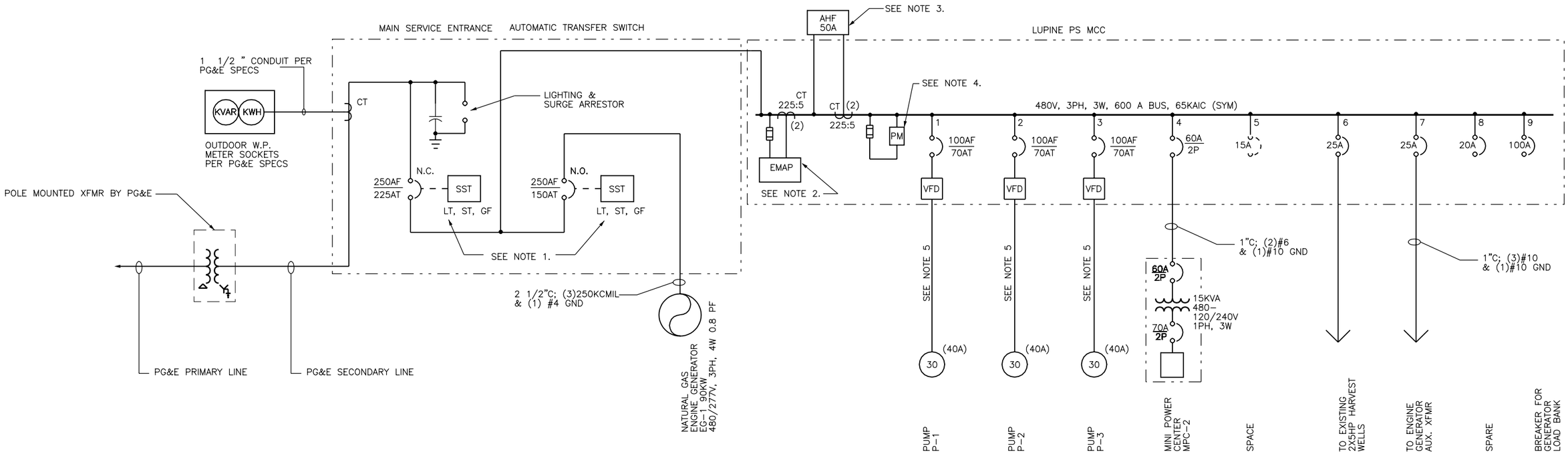

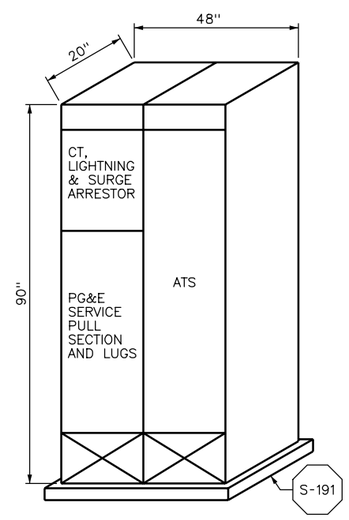

ATS

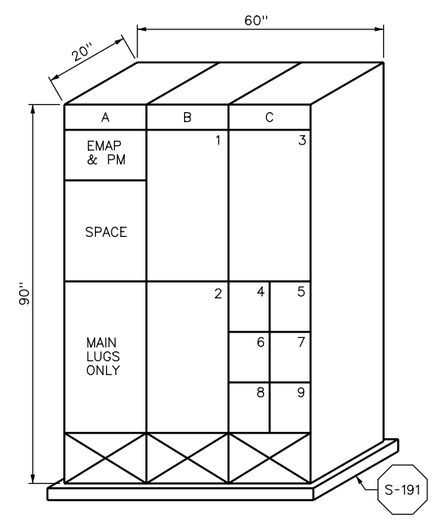

MCC

480VAC LOADS						
			FLA (PRESENT)		FLA (FUTURE)	
ITEM	KVA	HP	CONNECTED	DEMAND	CONNECTED	DEMAND
LU P-1		30	40	28	40	28
LU P-2		30	40	28	40	28
LU P-3		30	40	28	40	28
EXIST HW #1		5	7.6	5.32	7.6	5.32
EXIST HW #2		5	7.6	5.32	7.6	5.32
MPC	15		31.25	21.875	31.25	21.875
MISC			50	35	50	35
		TOTALS	216.45	151.515	216.45	151.515

NOTES:

1. SST — SOLID STATE TRIP DEVICE
   LT – LONG TIME
   ST – SHORT TIME
   GF – GROUND FAULT
2. EMAP — ELECTRONIC METERING ANALYZER AND MONITORING PANEL
3. AHF 50A — ACTIVE HARMONIC FILTER –HARMONIC RMS CURRENT CANCELLATION
4. PM — MICROPROCESSOR CONTROLLED THREE PHASE MONITOR
5. SEE SHEET B-E-201 FOR CONDUIT AND WIRE SIZE

REGISTERED PROFESSIONAL ENGINEER CHARLES M. REYNOLDS No. E011791 Exp. 9-30-04 ELECTRICAL STATE OF CALIFORNIA
05 FEB 2004

REV	DATE	BY	DESCRIPTION

SCALE

WARNING: 0 1/2 1 — IF THIS BAR DOES NOT MEASURE 1" THEN DRAWING IS NOT TO SCALE

DESIGNED A. P. SORLEY
DRAWN A. P. SORLEY
CHECKED K. A. CREAGER

SUBMITTED BY
JOHN A. BERGEN — C31069 LICENSE NO. — 2/16/2004 DATE
STEVE J. HYLAND — C23892 LICENSE NO. — 2/16/2004 DATE

DIGALERT — DIAL TOLL FREE 1-800-642-2444 AT LEAST TWO DAYS BEFORE YOU DIG — UNDERGROUND SERVICE ALERT OF NORTHERN CALIFORNIA

LOS OSOS COMMUNITY SERVICES DISTRICT

MWH Walnut Creek, California

LOS OSOS WASTEWATER PROJECT
ELECTRICAL
LUPINE PS & STANDBY POWER
SINGLE LINE

SHEET B-E-202

Job No: 1481166 File: N:\Projects\los_osos\Collect_Sys\PS\ele\B-E-202.dgn Plot Date: 08-FEB-2004 11:07

NOTE:

1. CONTRACTROR SHALL PROVIDE 3"CO FROM PG&E PROVIDED POLE MOUNTED XFMR TO SERVICE PEDESTAL. CONTRACTOR MUST RECEIVE APPROVAL FROM PG&E PRIOR TO CONSTRUCTION. PG&E SHALL PROVIDE CONDUCTOR.

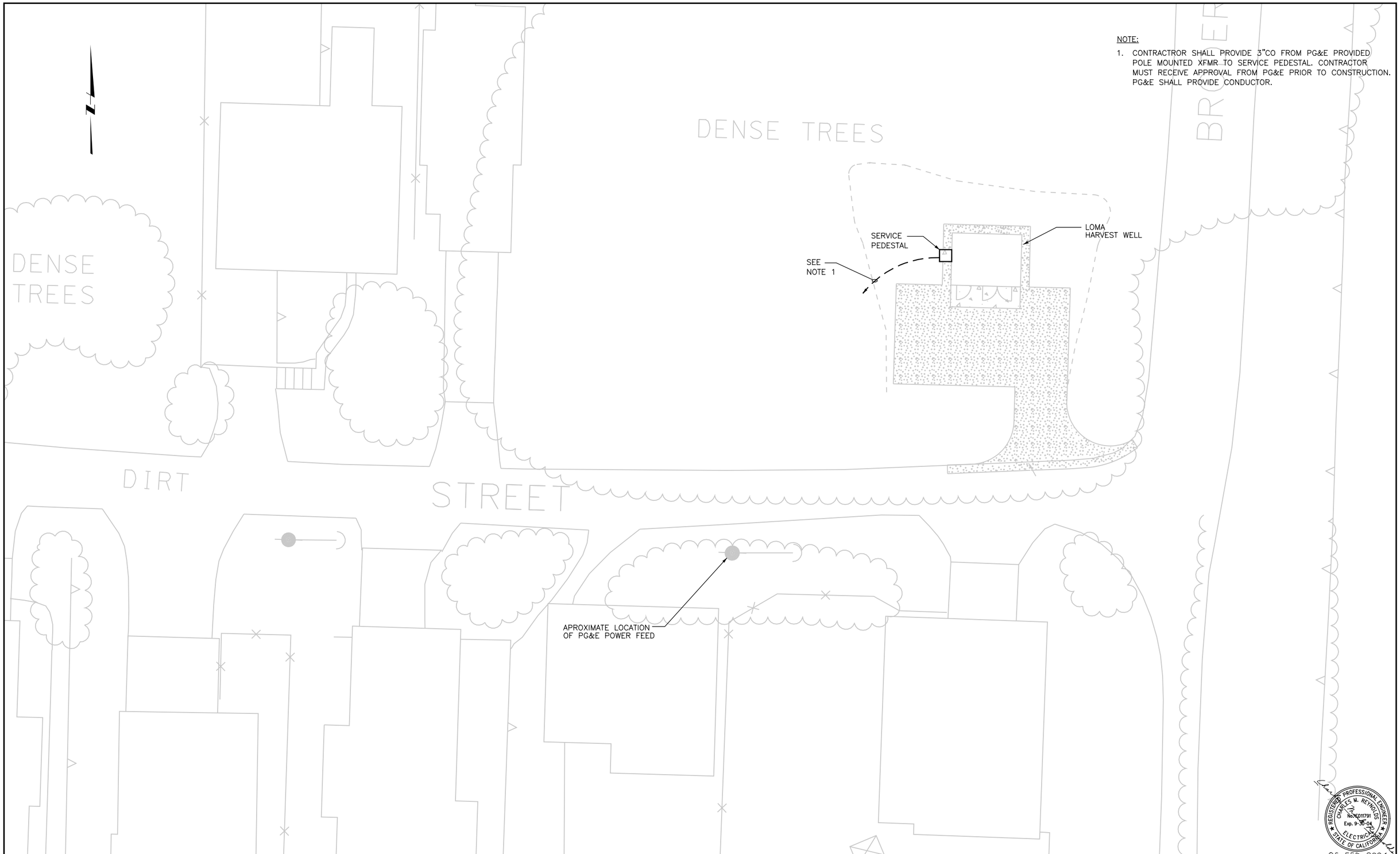

REGISTERED PROFESSIONAL ENGINEER CHARLES M. REYNOLDS No. E011791 Exp. 9-30-04 ELECTRICAL STATE OF CALIFORNIA

05 FEB 2004

REV	DATE	BY	DESCRIPTION

SCALE: 1" = 10'

WARNING: 0 1/2 1 — IF THIS BAR DOES NOT MEASURE 1" THEN DRAWING IS NOT TO SCALE

DESIGNED J.ASHIZAWA
DRAWN J.ASHIZAWA
CHECKED

SUBMITTED BY
JOHN A. BERGEN — C31069 LICENSE NO. — 2/16/2004 DATE
STEVEN J. HYLAND — C23892 LICENSE NO. — 2/16/2004 DATE

DIGALERT — DIAL TOLL FREE 1-800-642-2444 AT LEAST TWO DAYS BEFORE YOU DIG — UNDERGROUND SERVICE ALERT OF NORTHERN CALIFORNIA

LOS OSOS COMMUNITY SERVICES DISTRICT

MWH Walnut Creek, California

LOS OSOS WASTEWATER PROJECT

LOMA HARVEST WELL BUILDING ELECTRICAL SITE PLAN

SHEET B-E-203

Job No: 1481166 File: N:\Projects\los_osos\Collect_Sys\PS\ele\B-E-203.dgn Plot Date: 08-FEB-2004 11:08

NOTES:

1. VERIFY LOCATION OF CONTROLLER WITH IRRIGATION DRAWINGS
2. CONTRACTOR SHALL PROVIDE 1"C, 2#14 2#14 SP FROM PSH AND INTRUSION SWITCHES TO THE CONTROL PANEL. CONTRACTOR SHALL PROVIDE 2"C; (3)2/C #16 SHLD FROM AIT-1, AIT-2 & FIT-1 TO CONTROL PANEL. SEE SHEET B-E-205 FOR POWER CONDUIT AND WIRE INFORMATION.
3. CONTROL PANEL SHALL CONTAIN RTU UNIT WITH MODEM AND TELEPHONE JACK TO COMMUNICATE WITH SCADA SYSTEM.

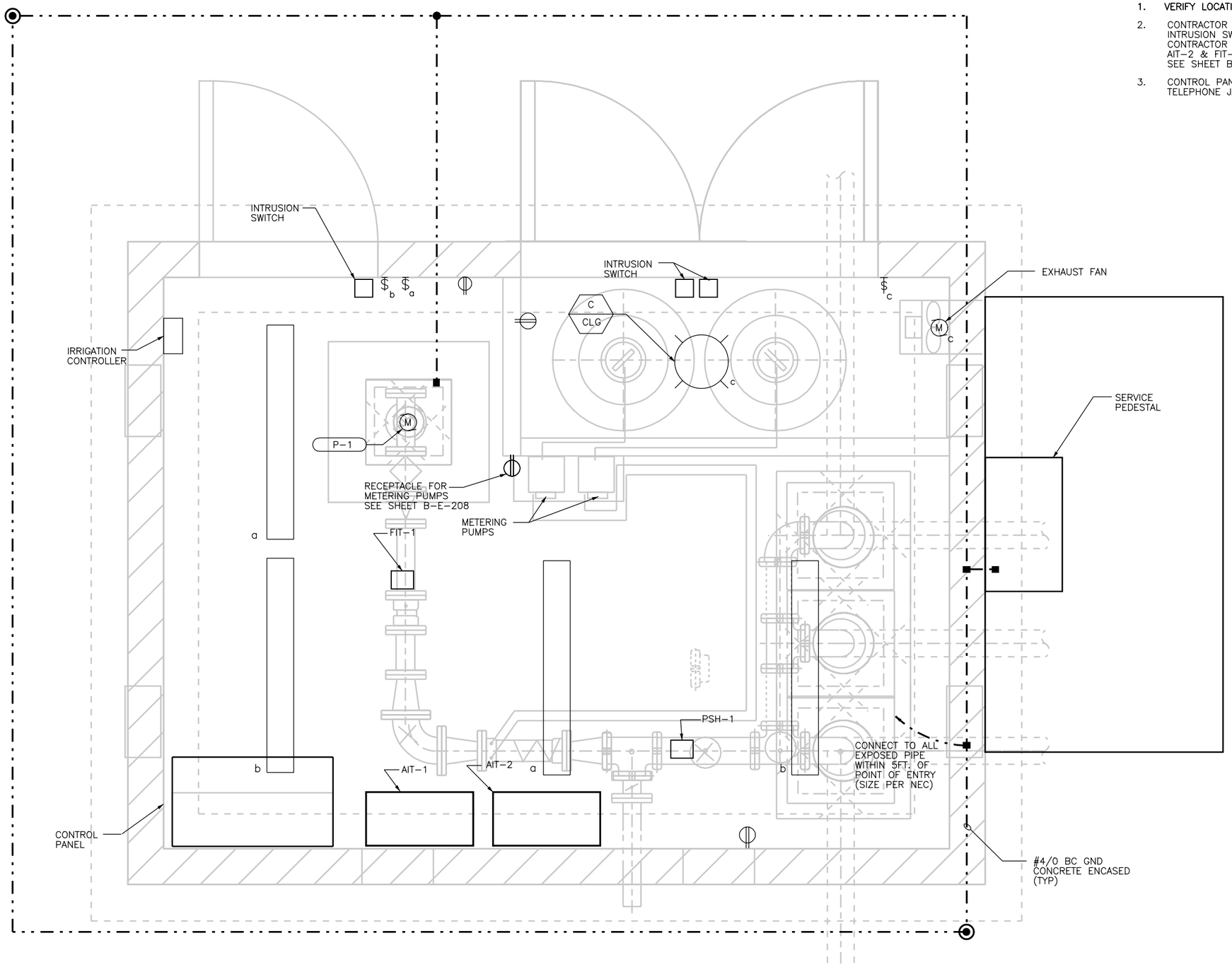

REGISTERED PROFESSIONAL ENGINEER CHARLES M. REYNOLDS No. E011791 Exp. 9-30-04 ELECTRICAL STATE OF CALIFORNIA

05 FEB 2004

REV	DATE	BY	DESCRIPTION

SCALE: 1' = 1' 0"

WARNING: 0 1/2 1 — IF THIS BAR DOES NOT MEASURE 1" THEN DRAWING IS NOT TO SCALE

DESIGNED A. P. SORLEY
DRAWN A. P. SORLEY
CHECKED K. A. CREAGER

SUBMITTED BY
JOHN A. BERGEN — C31069 LICENSE NO. — 2/16/2004 DATE
STEVE J. HYLAND — C23892 LICENSE NO. — 2/16/2004 DATE

DIGALERT — DIAL TOLL FREE 1-800-642-2444 AT LEAST TWO DAYS BEFORE YOU DIG — UNDERGROUND SERVICE ALERT OF NORTHERN CALIFORNIA

LOS OSOS COMMUNITY SERVICES DISTRICT

MWH Walnut Creek, California

LOS OSOS WASTEWATER PROJECT
ELECTRICAL
LOMA HARVEST WELL BUILDING
ELECTRICAL POWER, LIGHTING, & GROUNDING PLAN

SHEET B-E-204

Job No: 1481166 File: N:\Projects\los_osos\Collect_Sys\PS\ele\B-E-204.dgn Plot Date: 08-FEB-2004 11:09

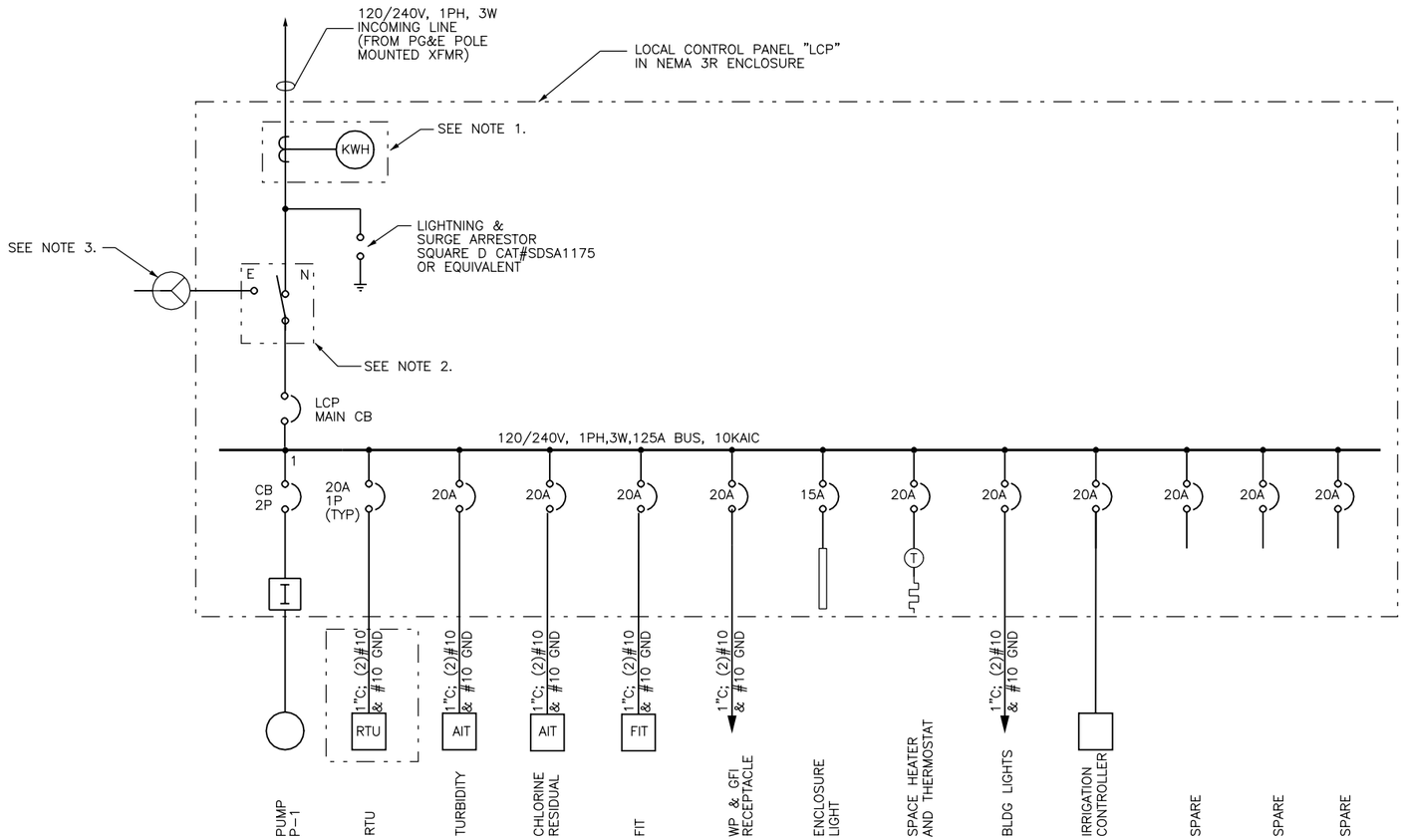

TYPICAL HARVEST WELLS
LOCAL CONTROL PANEL SINGLE LINE DIAGRAM

LOCAL CONTROL PANEL (ELEC)	PUMP NUMBERS	HARVEST WELLS NAMES	MOTOR HP	CB	LCP MAIN CB	MOTOR FEEDER FROM LCP	RTU
LCP-2	P1	LOMA	7.5	60A	100A	1*C, 2#6 & 1#10 GND	RTU 2

SEE NOTE 4.

120/240VAC LOADS						
			FLA (PRESENT)		FLA (FUTURE)	
ITEM	KVA	HP	CONNECTED	DEMAND	CONNECTED	DEMAND
LOMA P-1		7.5	40	28	40	28
PLC	1.92		16	11.2	16	11.2
MISC			20	14	20	14
		TOTAL	76	53.2	76	53.2

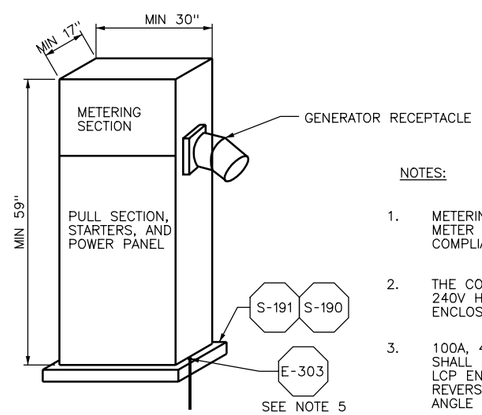

HARVEST WELL PEDESTAL ELEVATION

NOTES:

1. METERING DEVICE MOUNTED IN ENCLOSURE, COMPLETE WITH METER, METER SOCKET, AND TEST BY-PASS SWITCHES SHALL BE IN COMPLIANCE WITH PG&E.
2. THE CONTRACTOR SHALL PROVIDE A DOUBLE THROW 2 POLE, 100A, 240V HEAVY DUTY MANUAL TRANSFER SWITCH IN A NEMA 4X ENCLOSURE ADJACENT TO THE LCP.
3. 100A, 4 POLE, 600V, HEAVY DUTY WEATHERPROOF RECEPTACLE SHALL BE PROVIDED AND INSTALLED ON THE EXTERIOR OF THE LCP ENCLOSURE. RECEPTACLE SHALL BE APPLETON STYLE 2 REVERSE SERVICE CAT. NO. ADJA1034-200-RS WITH BACK BOX, ANGLE ADAPTER, SPRING COVER, AND MATCHING PLUGS.
4. PALISADES HARVEST WELL SHALL BE POWERED 480VAC FROM THE WWTP. EAST PASO HARVEST WELL SHALL BE POWERED 480VAC FROM THE EAST PASO STANDBY POWER FACILITY (SEE DWG A-E-208)
5. ACCESSIBLE GROUND ROD FOR GENERATOR

REGISTERED PROFESSIONAL ENGINEER
CHARLES M. REYNOLDS
No. E011791
Exp. 9-30-04
ELECTRICAL
STATE OF CALIFORNIA
05 FEB 2004

REV	DATE	BY	DESCRIPTION

SCALE

WARNING
0 1/2 1
IF THIS BAR DOES NOT MEASURE 1" THEN DRAWING IS NOT TO SCALE

DESIGNED A. P. SORLEY
DRAWN A. P. SORLEY
CHECKED K. A. CREAGER

SUBMITTED BY
JOHN A. BERGEN — C31069 LICENSE NO. — 2/16/2004 DATE
STEVE J. HYLAND — C23892 LICENSE NO. — 2/16/2004 DATE

DIGALERT
DIAL TOLL FREE
1-800-642-2444
AT LEAST TWO DAYS BEFORE YOU DIG
UNDERGROUND SERVICE ALERT OF NORTHERN CALIFORNIA

LOS OSOS
COMMUNITY SERVICES DISTRICT

MWH
Walnut Creek, California

LOS OSOS WASTEWATER PROJECT
ELECTRICAL
HARVEST WELL BUILDING
SINGLE LINE

SHEET
B-E-205

Job No: 1481166 File: N:\Projects\los_osos\Collect_Sys\PS\ele\B-E-205.dgn Plot Date: 08-FEB-2004 11:09

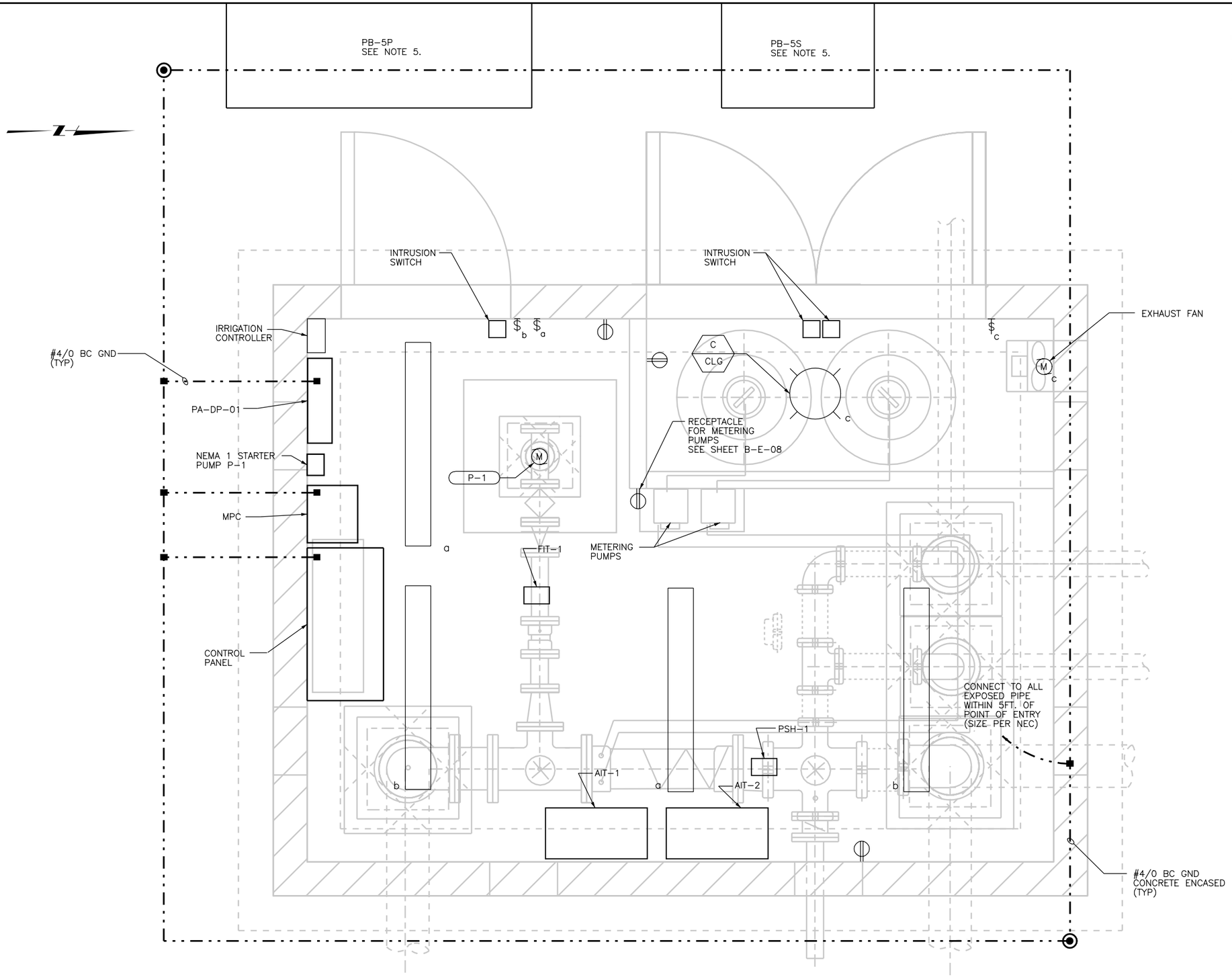

NOTES:

1. VERIFY LOCATION OF CONTROLLER WITH IRRIGATION DRAWINGS
2. SEE SHEET B-E-207 FOR CONDUIT AND WIRE DETAILS.
3. THE EXHAUST FAN, LIGHTS AND RECEPTALES AITS AND FITS SHALL BE 120V AND POWERED FROM MPC. PROVIDE MIN 3/4"C;[(2)#10 & (1)#10 GND] FOR EACH AND WIRE COMPLETE.
4. CONTRACTOR SHALL PROVIDE 1"C, 2#14 2#14 SP FROM PSH AND INSTRUSION SWITCHES TO THE CONTROL CABINET. CONTRACTOR SHALL PROVIDE 2"C; (3)2/C #16 SHLD FROM AIT-1, AIT-2 & FIT-1 TO CONTROL CABINET.
5. CONTRACTOR SHALL FURNISH AND INSTALL TWO PULLBOXES TO THE WEST OF THE HARVEST WELL. ONE SHALL BE LABELED AS PB-5P WITH MIN. INSIDE DIMENSIONS OF 6'x6'x8"DEEP WITH TRAFFIC TYPE COVER. ONE SHALL BE LABELED PB-5S WITH MIN INSIDE DIMENSIONS OF 3'x3'x5'DEEP WITH TRAFFIC TYPE COVER. SEE SHEET B-E-200 FOR APPROX. LAYOUT.

REGISTERED PROFESSIONAL ENGINEER CHARLES M. REYNOLDS No. E011791 Exp. 9-30-04 ELECTRICAL STATE OF CALIFORNIA
05 FEB 2004

REV	DATE	BY	DESCRIPTION

SCALE: 1' = 1' 0"

WARNING: 0 1/2 1 — IF THIS BAR DOES NOT MEASURE 1" THEN DRAWING IS NOT TO SCALE

DESIGNED A. P. SORLEY
DRAWN A. P. SORLEY
CHECKED K. A. CREAGER

SUBMITTED BY
JOHN A. BERGEN — C31069 LICENSE NO. — 2/16/2004 DATE
STEVE J. HYLAND — C23892 LICENSE NO. — 2/16/2004 DATE

DIGALERT — DIAL TOLL FREE 1-800-642-2444 AT LEAST TWO DAYS BEFORE YOU DIG — UNDERGROUND SERVICE ALERT OF NORTHERN CALIFORNIA

LOS OSOS COMMUNITY SERVICES DISTRICT

MWH Walnut Creek, California

LOS OSOS WASTEWATER PROJECT
ELECTRICAL
PALISADES HARVEST WELL BUILDING
ELECTRICAL POWER, LIGHTING, & GROUNDING PLAN

SHEET B-E-206

Job No: 1481166 File: N:\Projects\los_osos\Collect_Sys\PS\ele\B-E-206.dgn Plot Date: 08-FEB-2004 11:10

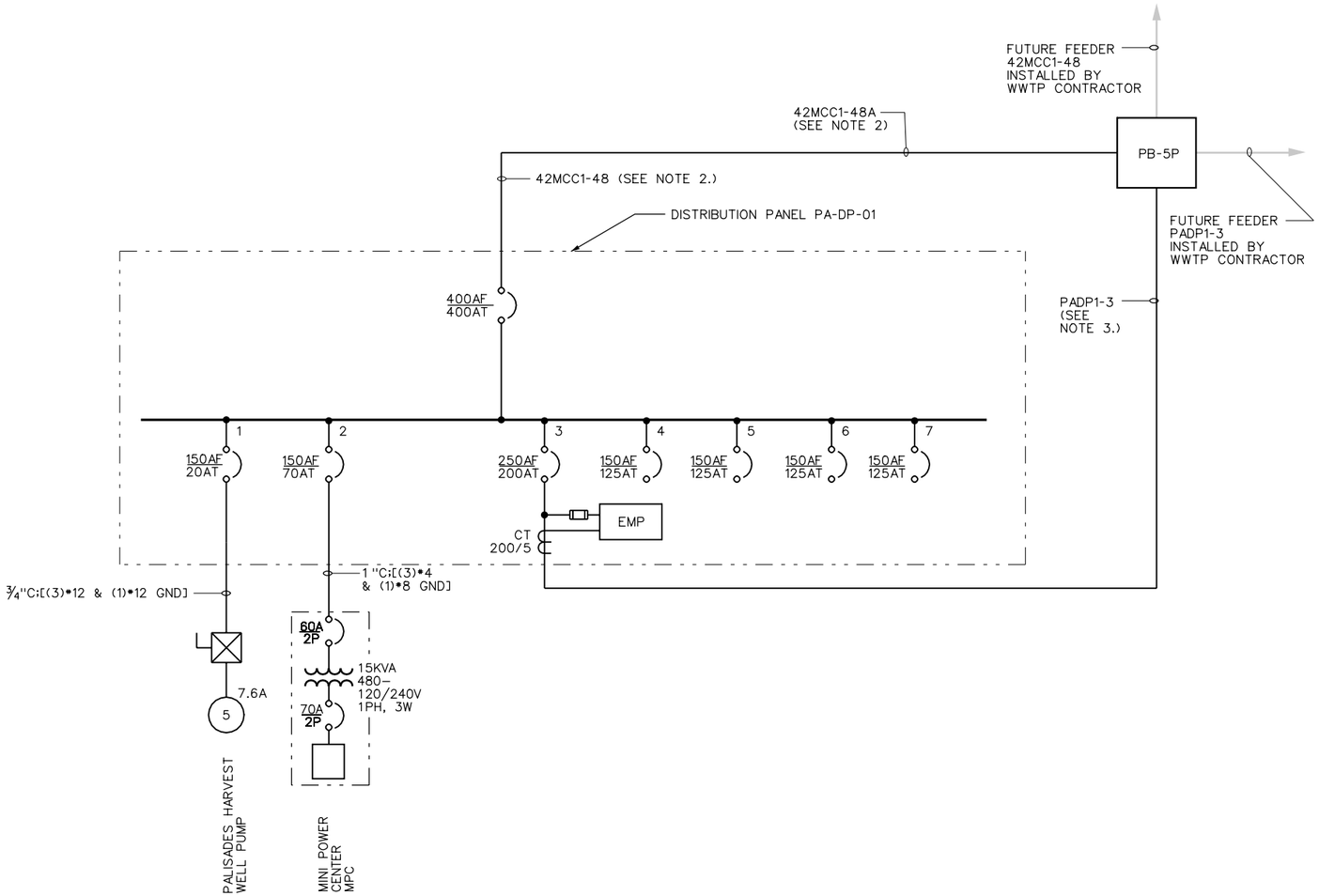

NOTES:

1. CONTRACTOR MUST PROVIDE A TEMPORARY PORTABLE GENERATOR TO PROVIDE POWER TO DISTRIBUTION PANEL TEMPORARY POWER SHALL BE USED FOR TESTING PURPOSES FOR THE PALISADES HW.
2. CONTRACTOR SHALL INSTALL (2)4"CO LABELED 42MCC1-48A. FEEDER WILL BE PROVIDED BY WWTP CONTRACTOR TO PROVIDE PERMANENT POWER FROM WWTP.
3. CONTRACTOR SHALL INSTALL (1)4"CO LABELED PADP1-3. FEEDER WILL BE PROVIDED BY WWTP CONTRACTOR TO PROVIDE PERMANENT POWER TO EXISTING PRODUCTION WELLS.

LEGEND

EMP ELECTRONIC METERING PANEL
CUTLER HAMMER IQ 200 OR EQUAL

REGISTERED PROFESSIONAL ENGINEER
CHARLES M. REYNOLDS
No. E011791
Exp. 9-30-04
ELECTRICAL
STATE OF CALIFORNIA
05 FEB 2004

REV	DATE	BY	DESCRIPTION

SCALE: NONE

WARNING: 0 1/2 1 — IF THIS BAR DOES NOT MEASURE 1" THEN DRAWING IS NOT TO SCALE

DESIGNED A. P. SORLEY
DRAWN A. P. SORLEY
CHECKED K. A. CREAGER

SUBMITTED BY
JOHN A. BERGEN — C31069 LICENSE NO. — 2/16/2004 DATE
STEVE J. HYLAND — C23892 LICENSE NO. — 2/16/2004 DATE

DIGALERT — DIAL TOLL FREE 1-800-642-2444 AT LEAST TWO DAYS BEFORE YOU DIG — UNDERGROUND SERVICE ALERT OF NORTHERN CALIFORNIA

LOS OSOS COMMUNITY SERVICES DISTRICT

MWH Walnut Creek, California

LOS OSOS WASTEWATER PROJECT
PA-DP-01
SINGLE LINE DIAGRAM

SHEET B-E-207

Job No: 1481166 File: N:\Projects\los_osos\Collect_Sys\PS\ele\B-E-207.dgn Plot Date: 08-FEB-2004 11:10

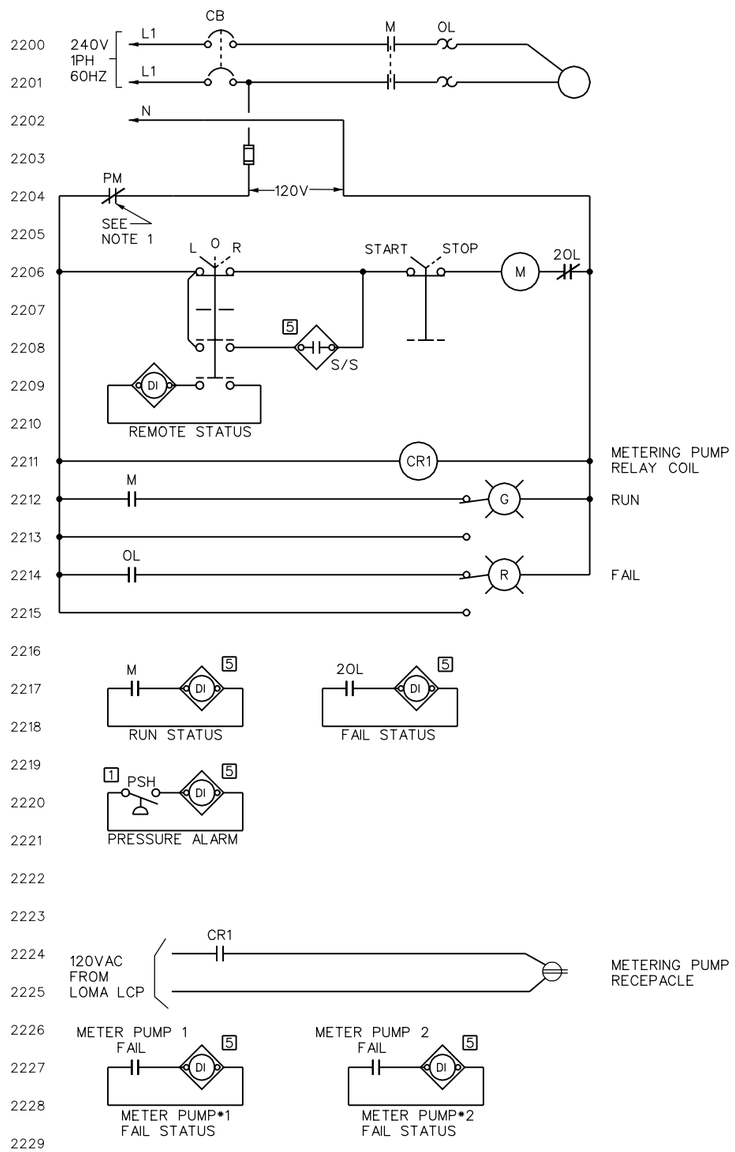

LOMA HARVEST WELL PUMP

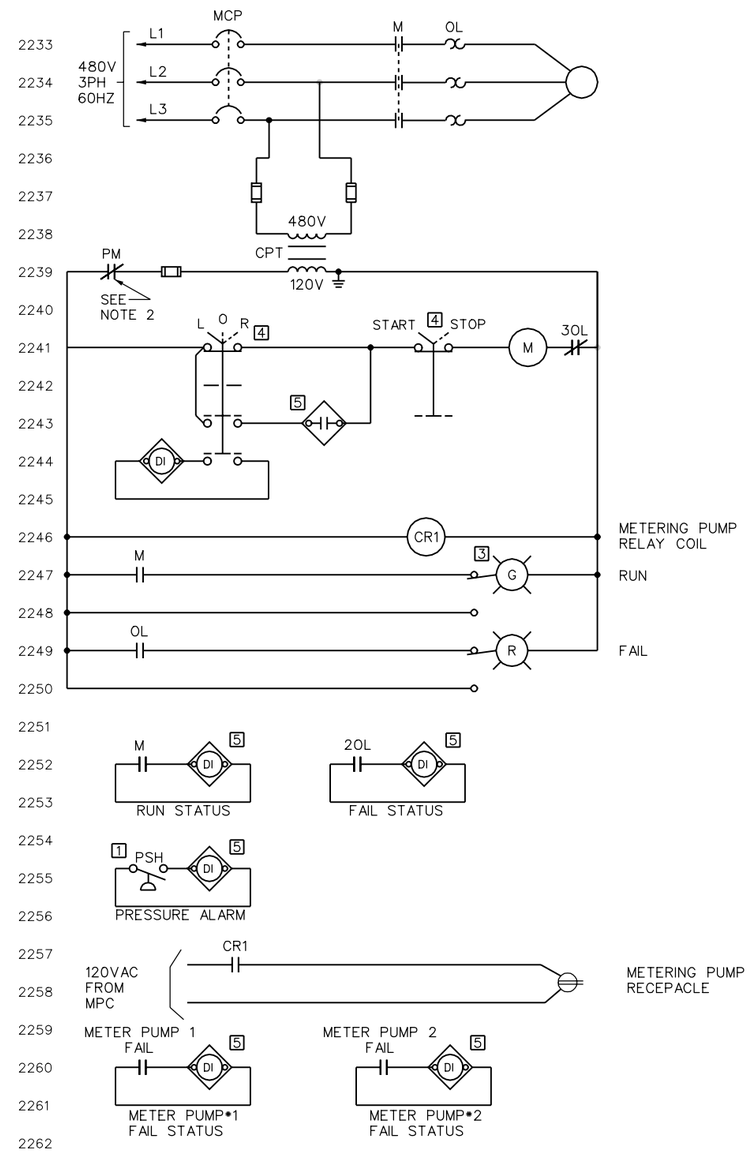

EAST PASO & PALISADE HARVEST WELL PUMP

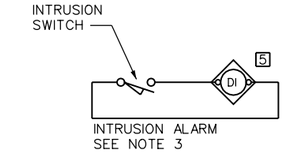

INTRUSION ALARM SYSTEM

NOTES:

1. LOMA HARVEST WELL SHALL CONTAIN A SINGLE PHASE MONITOR. A NORMALLY CLOSED CONTACT SHALL BE PLACED IN EVERY PUMP MOTOR CONTROLLER.
2. HARVEST WELLS PALISADES & EAST PASO SHALL CONTAIN A THREE PHASE MONITOR. A NORMALLY CLOSED CONTACT SHALL BE PLACED IN EVERY PUMP MOTOR CONTROLLER.
3. A INTRUSION ALARM SHALL BE INSTALLED AT EACH HARVEST WELL ENTRANCE AND SERVICE PEDESTAL DOOR. IF MORE THAN ONE INTRUSION ALARM EXISTS CONTRACTOR SHALL CONNECT SWITCHES IN PARALLEL FOR ONLY ONE INPUT TO THE PLC.

1 FIELD
2 LCS
3 LCP
4 MCC
5 PLC

REGISTERED PROFESSIONAL ENGINEER CHARLES M. REYNOLDS No. E011791 Exp. 9-30-04 ELECTRICAL STATE OF CALIFORNIA
05 FEB 2004

REV	DATE	BY	DESCRIPTION

SCALE: NO SCALE

WARNING: 0 1/2 1 — IF THIS BAR DOES NOT MEASURE 1" THEN DRAWING IS NOT TO SCALE

DESIGNED A. P. SORLEY
DRAWN A. P. SORLEY
CHECKED K. A. CREAGER

SUBMITTED BY
JOHN A. BERGEN — C31069 LICENSE NO. — 2/16/2004 DATE
STEVE J. HYLAND — C23892 LICENSE NO. — 2/16/2004 DATE

DIGALERT — DIAL TOLL FREE 1-800-642-2444 AT LEAST TWO DAYS BEFORE YOU DIG — UNDERGROUND SERVICE ALERT OF NORTHERN CALIFORNIA

LOS OSOS COMMUNITY SERVICES DISTRICT

MWH Walnut Creek, California

LOS OSOS WASTEWATER PROJECT
ELECTRICAL
HARVEST WELL BUILDING
CONTROL DIAGRAM

SHEET B-E-208

Job No: 1481166 File: N:\Projects\los_osos\Collect_Sys\PS\ele\B-E-208.dgn Plot Date: 08-FEB-2004 11:11

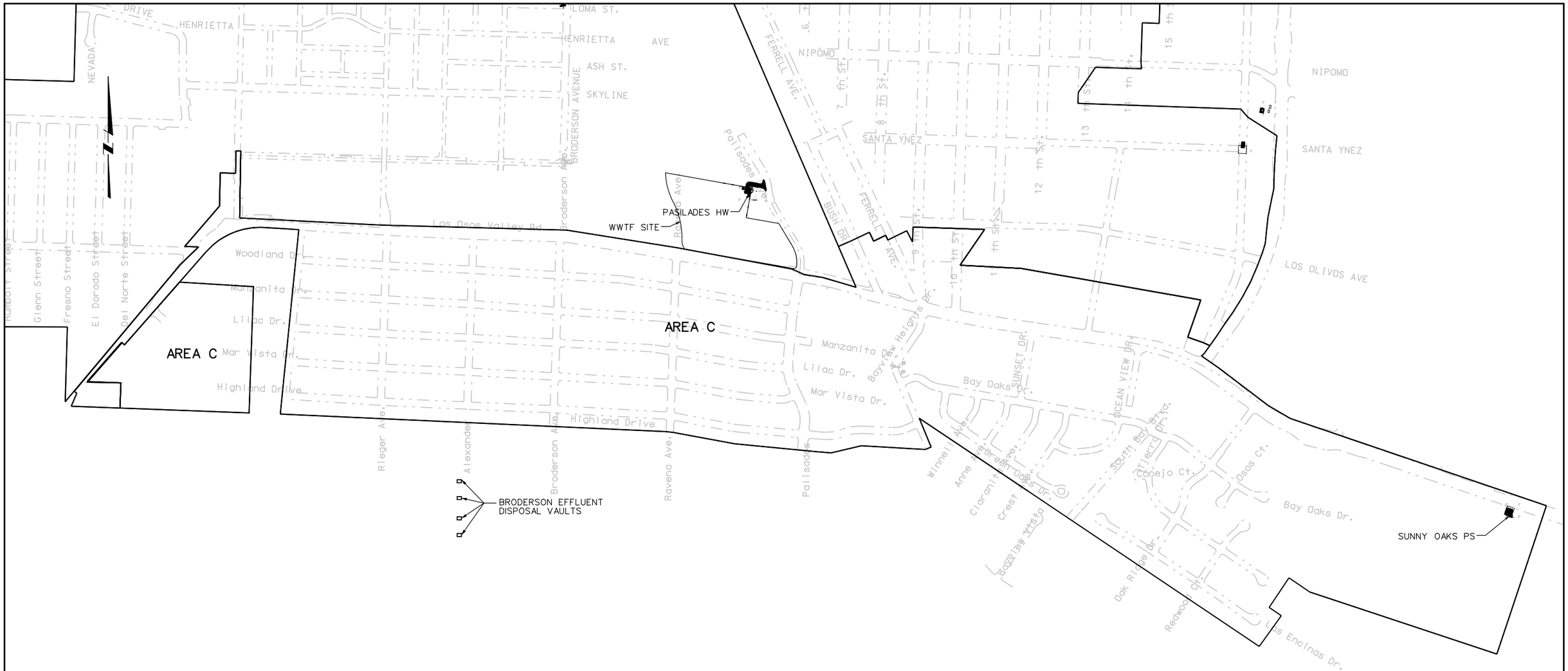

REGISTERED PROFESSIONAL ENGINEER
CHARLES M. REYNOLDS
No. E011791
Exp. 9-30-04
ELECTRICAL
STATE OF CALIFORNIA

05 FEB 2004

REV	DATE	BY	DESCRIPTION

SCALE: 1" = 400'

WARNING: 0 1/2 1 — IF THIS BAR DOES NOT MEASURE 1" THEN DRAWING IS NOT TO SCALE

DESIGNED A. P. SORLEY
DRAWN A. P. SORLEY
CHECKED K. A. CREAGER

SUBMITTED BY
JOHN A. BERGEN — C31069 LICENSE NO. — 2/16/2004 DATE
STEVE J. HYLAND — C23892 LICENSE NO. — 2/16/2004 DATE

DIGALERT — DIAL TOLL FREE 1-800-642-2444 AT LEAST TWO DAYS BEFORE YOU DIG — UNDERGROUND SERVICE ALERT OF NORTHERN CALIFORNIA

LOS OSOS COMMUNITY SERVICES DISTRICT

MWH Walnut Creek, California

LOS OSOS WASTEWATER PROJECT

ELECTRICAL
GENERAL AREA PLAN
AREA C

SHEET C-E-200

Job No: 1481166 File: \\uswck1s02\nwdd\projects\los_osos\collect_sys\PS\ele\C-E-200.dgn Plot Date: 08-FEB-2004 11:30

NOTES:

1. CONTRACTOR SHALL PROVIDE 4"C FROM PG&E PROVIDED POLE MOUNTED XFMR TO THE MAIN SERVICE ENTRANCE. PG&E SHALL PROVIDE CONDUCTOR PER PG&E SPECIFICATIONS. CONTRACTOR MUST RECEIVE PG&E APPROVAL PRIOR TO CONSTRUCTION
2. CONTROL DUCTBANK SHALL CONTAIN: 1"C; (6)#14, (6)#14 SP & (1)#12 GND
3. POWER/CONTROL DUCTBANK SHALL CONTAIN (2)[2"CO; FEEDER SHALL BE PROVIDED BY PUMP VENDOR], [1"C; (16)#14 & (12)#14 SP] AND [1"C; (2)#10 & (1)#10 GND] SIGNAL DUCTBANK SHALL CONTAIN [1"CO; CABLE INSTALLED BY MANUFACTURER]. CONTRACTOR SHALL MAINTAIN 12" SEPARATION BETWEEN DUCTBANKS.

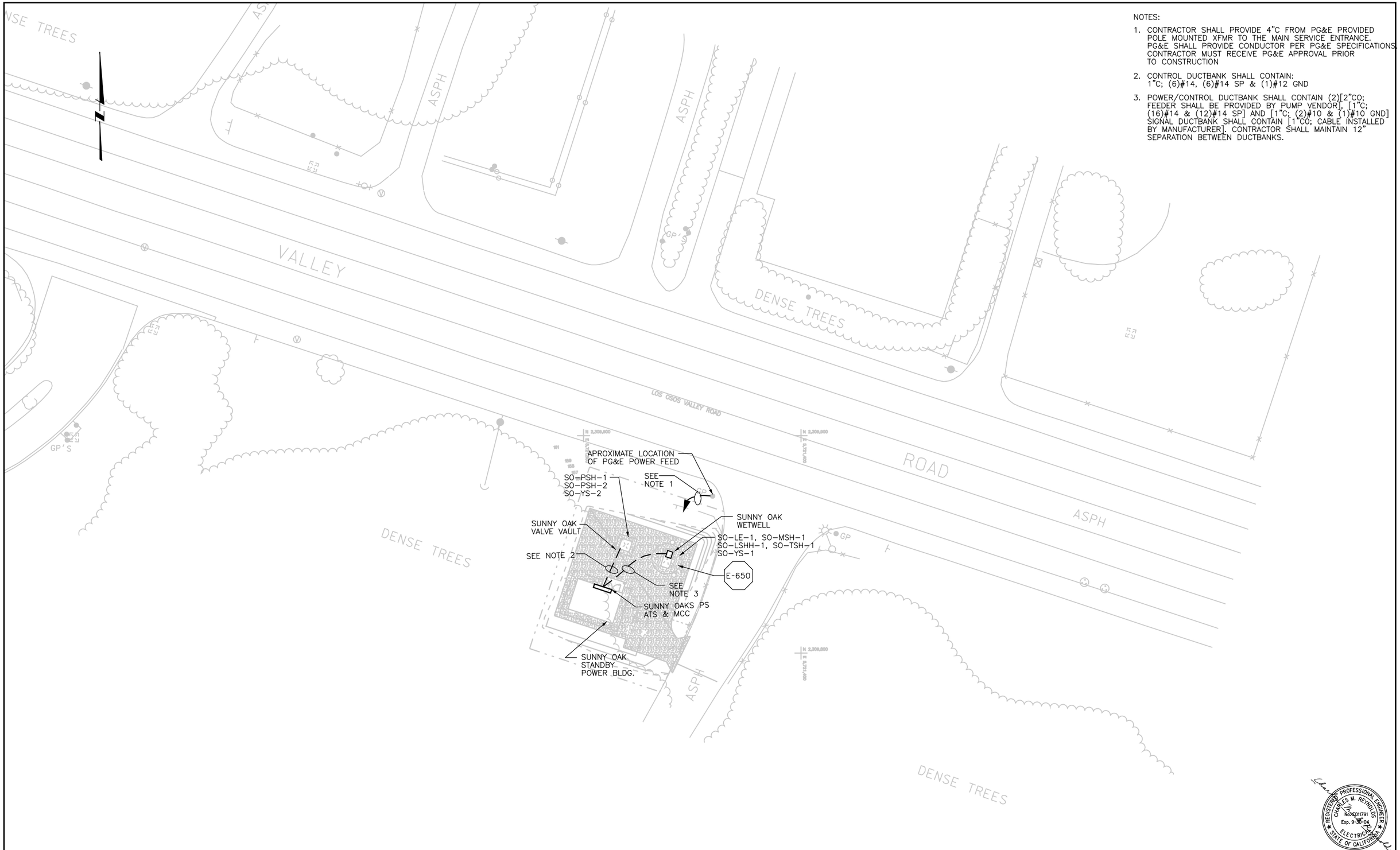

REGISTERED PROFESSIONAL ENGINEER CHARLES M. REYNOLDS No. E011791 Exp. 9-30-04 ELECTRICAL STATE OF CALIFORNIA

05 FEB 2004

REV	DATE	BY	DESCRIPTION

SCALE: 1" = 20'

WARNING: 0 1/2 1 — IF THIS BAR DOES NOT MEASURE 1" THEN DRAWING IS NOT TO SCALE

DESIGNED A. P. SORLEY
DRAWN A. P. SORLEY
CHECKED K. A. CREAGER

SUBMITTED BY
JOHN A. BERGEN — C31069 LICENSE NO. — 2/16/2004 DATE
STEVE J. HYLAND — C23892 LICENSE NO. — 2/16/2004 DATE

DIGALERT — DIAL TOLL FREE 1-800-642-2444 AT LEAST TWO DAYS BEFORE YOU DIG — UNDERGROUND SERVICE ALERT OF NORTHERN CALIFORNIA

LOS OSOS COMMUNITY SERVICES DISTRICT

MWH Walnut Creek, California

LOS OSOS WASTEWATER PROJECT
ELECTRICAL
SUNNY OAKS SUBMERSIBLE PUMP STATION SITE – ELECTRICAL POWER, LIGHTING & GROUNDING PLAN

SHEET C-E-201

Job No: 1481166 File: N:\Projects\los_osos\Collect_Sys\PS\ele\C-E-201.dgn Plot Date: 08-FEB-2004 11:12

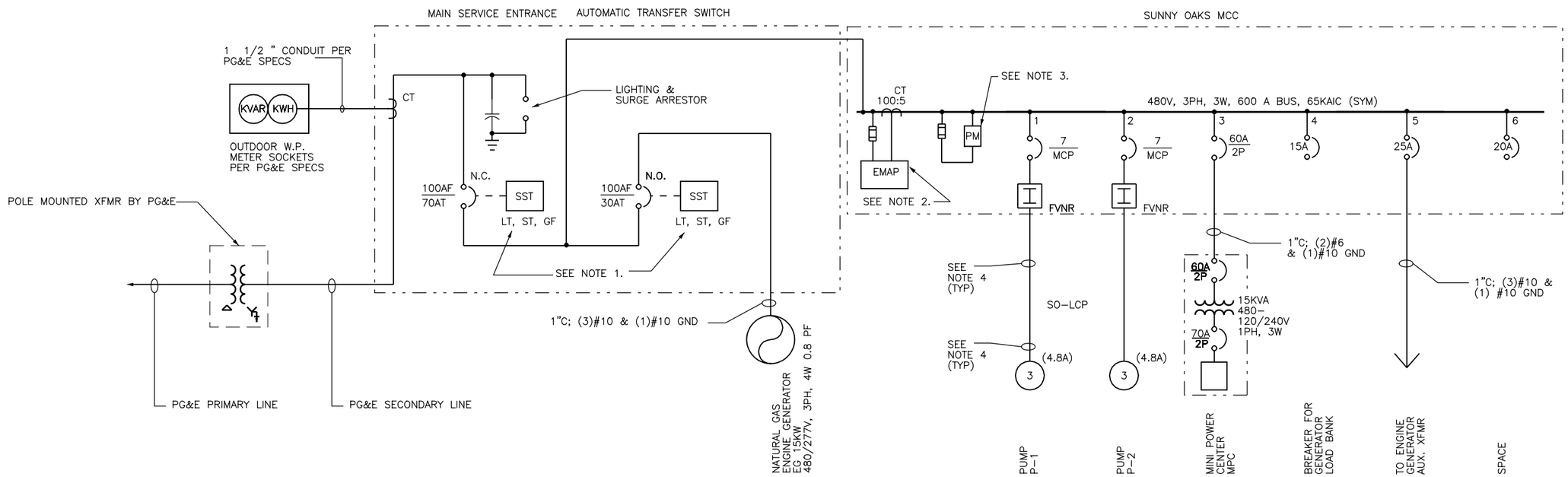

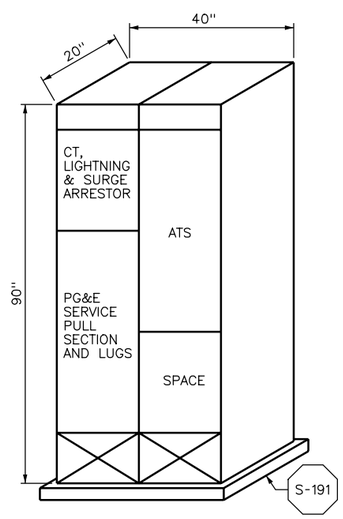

ATS

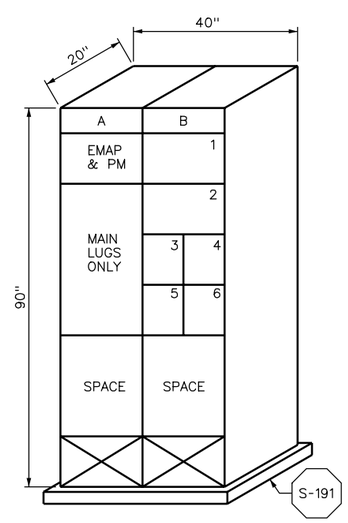

MCC

480VAC LOADS						
			FLA (PRESENT)		FLA (FUTURE)	
ITEM	KVA	HP	CONNECTED	DEMAND	CONNECTED	DEMAND
SO P-1		3	4.8	3.36	4.8	3.36
SO P-2		3	4.8	3.36	4.8	3.36
MPC	15		31.25	21.875	31.25	21.875
MISC			30	21	30	21
		TOTAL	70.85	49.595	70.85	49.595

NOTES:

1. SST — SOLID STATE TRIP DEVICE
   LT – LONG TIME
   ST – SHORT TIME
   GF – GROUND FAULT
2. EMAP — ELECTRONIC METERING ANALYZER AND MONITORING PANEL
3. PM — MICROPROCESSOR CONTROLLED THREE PHASE MONITOR
4. SEE SHEET C-E-202 FOR CONDUIT AND WIRE SIZES

REGISTERED PROFESSIONAL ENGINEER CHARLES M. REYNOLDS No. E011791 Exp. 9-30-04 ELECTRICAL STATE OF CALIFORNIA
05 FEB 2004

REV	DATE	BY	DESCRIPTION

SCALE

WARNING 0 1/2 1 — IF THIS BAR DOES NOT MEASURE 1" THEN DRAWING IS NOT TO SCALE

DESIGNED A. P. SORLEY
DRAWN A. P. SORLEY
CHECKED K. A. CREAGER

SUBMITTED BY
JOHN A. BERGEN — C31069 LICENSE NO. — 2/16/2004 DATE
STEVE J. HYLAND — C23892 LICENSE NO. — 2/16/2004 DATE

DIGALERT — DIAL TOLL FREE 1-800-642-2444 AT LEAST TWO DAYS BEFORE YOU DIG — UNDERGROUND SERVICE ALERT OF NORTHERN CALIFORNIA

LOS OSOS COMMUNITY SERVICES DISTRICT

MWH Walnut Creek, California

LOS OSOS WASTEWATER PROJECT
ELECTRICAL
SUNNY OAKS PS & STANDBY POWER
SINGLE LINE

SHEET C-E-202

Job No: 1481166 File: N:\Projects\los_osos\Collect_Sys\PS\ele\C-E-202.dgn Plot Date: 08-FEB-2004 11:12

NOTES:

1. CONTRACTOR SHALL PROVIDE 3"CO FROM PG&E PROVIDED POLE MOUNTED XFMR TO SERVICE PEDESTAL. CONTRACTOR MUST RECEIVE APPROVAL FROM PG&E PRIOR TO CONSTRUCTION. PG&E SHALL PROVIDE CONDUCTOR.

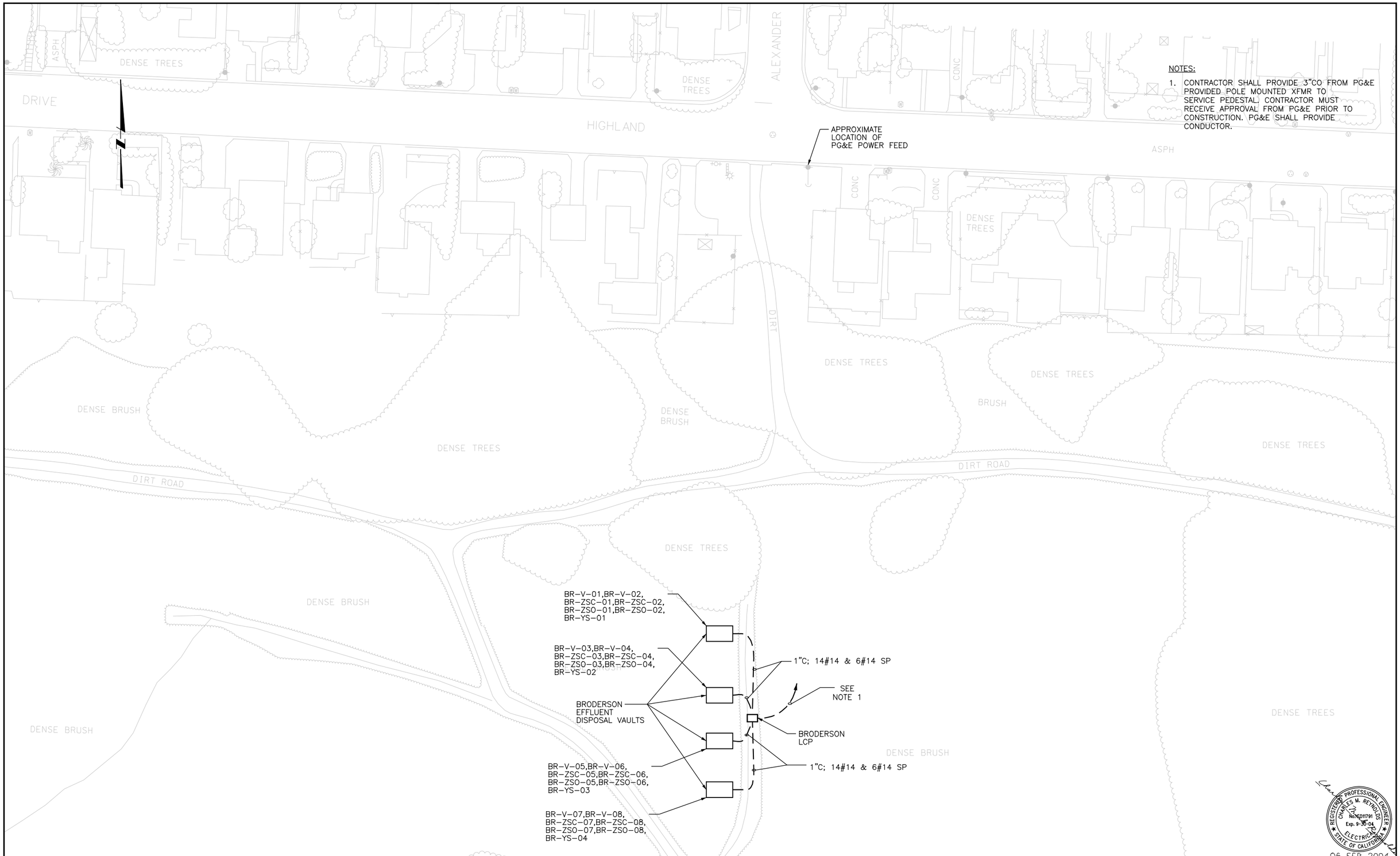

REGISTERED PROFESSIONAL ENGINEER CHARLES M. REYNOLDS No.E011791 Exp. 9-30-04 ELECTRICAL STATE OF CALIFORNIA

05 FEB 2004

REV	DATE	BY	DESCRIPTION

SCALE: 1" = 30'

WARNING: 0 1/2 1 — IF THIS BAR DOES NOT MEASURE 1" THEN DRAWING IS NOT TO SCALE

DESIGNED J.ASHIZAWA
DRAWN J.ASHIZAWA
CHECKED

SUBMITTED BY
JOHN A. BERGEN — C31069 LICENSE NO. — 2/16/2004 DATE
STEVE J. HYLAND — C23892 LICENSE NO. — 2/16/2004 DATE

DIGALERT — DIAL TOLL FREE 1-800-642-2444 AT LEAST TWO DAYS BEFORE YOU DIG — UNDERGROUND SERVICE ALERT OF NORTHERN CALIFORNIA

LOS OSOS COMMUNITY SERVICES DISTRICT

MWH Walnut Creek, California

LOS OSOS WASTEWATER PROJECT
ELECTRICAL
BRODERSON EFFLUENT DISPOSAL VAULTS

SHEET C-E-300

Job No: 1481166 File: N:\Projects\los_osos\Collect_Sys\PS\ele\C-E-300.dgn Plot Date: 08-FEB-2004 11:13

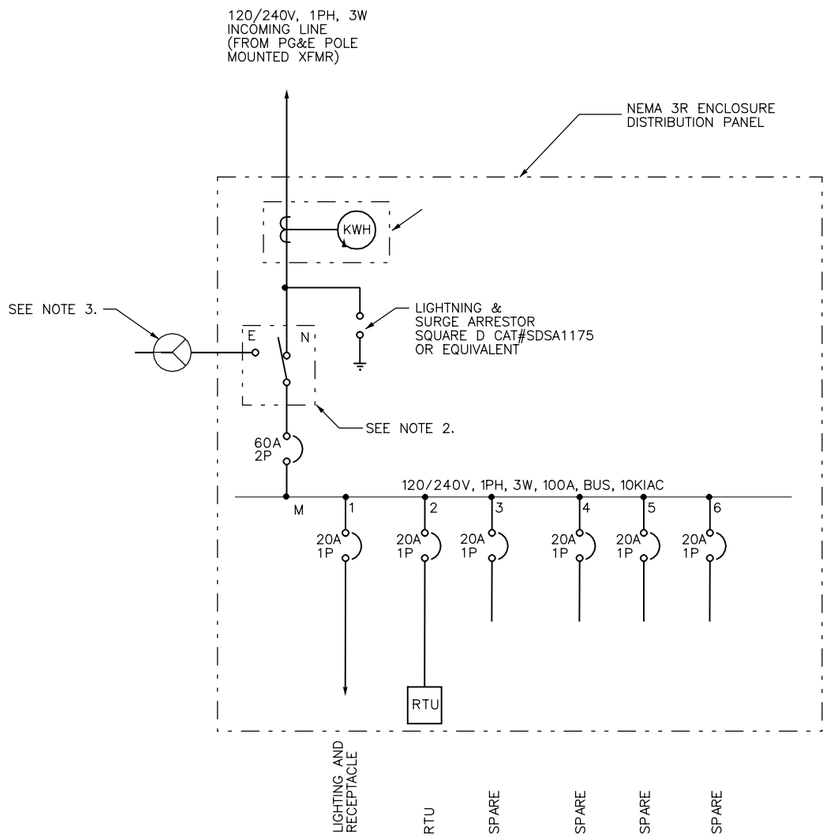

TYPICAL EFFLUENT DISPOSAL AND RECLAIM WATER SINGLE LINE DIAGRAM

EFFLUENT DISPOSAL	ENCLOSURE	RTU	AREA
SANTA MARIA	SM–LCP	RTU–23	A
PISMO	PI–LCP	RTU–24	A
BRODERSON	BR–LCP	RTU–25	C

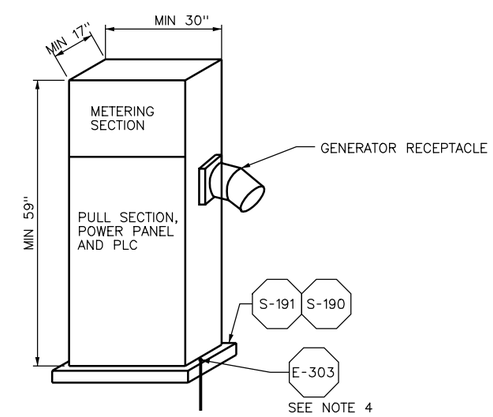

EFFLUENT DISPOSAL VAULT LCP ELEVATION

NOTES:

1. METERING DEVICE MOUNTED IN ENCLOSURE, COMPLETE WITH METER, METER SOCKET, AND TEST BY–PASS SWITCHES SHALL BE IN COMPLIANCE WITH PG&E.
2. THE CONTRACTOR SHALL PROVIDE A DOUBLE THROW 2 POLE, 100A, 240V HEAVY DUTY MANUAL TRANSFER SWITCH IN A NEMA 4X ENCLOSURE ADJACENT TO THE LCP.
3. 100A, 4 POLE, 600V, HEAVY DUTY WEATHERPROOF RECEPTACLE SHALL BE PROVIDED AND INSTALLED ON THE EXTERIOR OF THE LCP ENCLOSURE. RECEPTACLE SHALL BE APPLETON STYLE 2 REVERSE SERVICE CAT. NO. ADJA1034–200–RS WITH BACK BOX, ANGLE ADAPTER, SPRING COVER, AND MATCHING PLUGS.
4. ACCESSIBLE GROUND ROD FOR GENERATOR
5. LCP SHALL CONTAIN MODEM AND TELEPHONE JACK FOR PISMO AND SANTA MARIA EFFLUENT SITES, BRODERSON SHALL HAVE A RADIO TRANSMITTER. SEE INSTRUMENTATION DRAWINGS FOR DETAILS.

REGISTERED PROFESSIONAL ENGINEER
CHARLES M. REYNOLDS
No. E011791
Exp. 9-30-04
ELECTRICAL
STATE OF CALIFORNIA
05 FEB 2004

REV	DATE	BY	DESCRIPTION

SCALE

WARNING
0 1/2 1
IF THIS BAR DOES NOT MEASURE 1" THEN DRAWING IS NOT TO SCALE

DESIGNED A. P. SORLEY
DRAWN A. P. SORLEY
CHECKED K. A. CREAGER

SUBMITTED BY
JOHN A. BERGEN — C31069 LICENSE NO. — 2/16/2004 DATE
STEVE J. HYLAND — C23892 LICENSE NO. — 2/16/2004 DATE

DIGALERT
DIAL TOLL FREE
1-800-642-2444
AT LEAST TWO DAYS BEFORE YOU DIG
UNDERGROUND SERVICE ALERT OF NORTHERN CALIFORNIA

LOS OSOS
COMMUNITY SERVICES DISTRICT

MWH
Walnut Creek, California

LOS OSOS WASTEWATER PROJECT
ELECTRICAL
EFFLUENT DISPOSAL VAULTS
TYPICAL SINGLE LINE

SHEET
C–E–301

Job No: 1481166 File: N:\Projects\los_osos\Collect_Sys\PS\ele\C-E-301.dgn Plot Date: 08-FEB-2004 11:13

INSTRUMENTATION SYMBOLS

LIT	INSTRUMENT OR OTHER COMPONENT TO BE MOUNTED IN THE FIELD
TSL	INSTRUMENT OR OTHER COMPONENT TO BE MOUNTED INSIDE MAIN CONTROL BOARD (LCB) OR OTHER PANEL AS MARKED
FIC	INSTRUMENT OR OTHER COMPONENT TO BE MOUNTED ON LCB FRONT PANEL OR OTHER PANEL AS MARKED
PIR PSH	SINGLE INSTRUMENT OR OTHER COMPONENT HAVING MULTIPLE FUNCTIONS
	INSTRUMENT OR OTHER COMPONENT TO BE FURNISHED AND INSTALLED BY OTHERS IN THE FUTURE
TIC	INSTRUMENT OR OTHER COMPONENT TO BE MOUNTED ON FRONT OF LOCAL CONTROL PANEL (LCP)
FSL	INSTRUMENT OR OTHER COMPONENT TO BE MOUNTED INSIDE LOCAL CONTROL PANEL (LCP)
> <	HIGH/LOW SELECTOR
√	RELATED DEVICE PERFORMS LINEARIZING OR SQUARE ROOT FUNCTION
X Σ ÷	RELATED DEVICE PERFORMS MULTIPLYING, SUMMATION, OR DIVISION FUNCTION
1	GENERALIZED FOR COMPLEX INTERLOCK LOGIC-SEE SCHEMATICS OR SPECIFICATIIONS
// //	PNEUMATIC PRESSURE (P) SIGNAL
(3)	INDICATES QUANTITY OF SIGNALS (THREE)
— — —	ELECTRIC SIGNAL
	HYDRAULIC LINE
	MAIN PROCESS PIPING
	SONIC SIGNAL
	CAPILLIARY TUBING (FILLED SYSTEM)
E.S. 24VDC	POWER SUPPLY AS NOTED (24VDC; ETC)
A.S.	AIR SUPPLY (20 PSIG-EXCEPT AS NOTED)
	PRIMARY ELECTRICAL SUPPLY FOR INSTR (120V/60HZ UNLESS OTHERWISE NOTED
*	INDICATES VENDOR PACKAGE
	CABLE(MULTICONDUCTER OR COAXIAL) FURNISHED WITH EQUIPMENT
(E)	EXISTING ITEM
(F)	FUTURE ITEM
(R)	EXISTING ITEM TO BE RELOCATED

XX - LU - LUPINE
XX - LO - LOMA HARVEST WELL
XX - PA - PALISADES HARVEST WELL

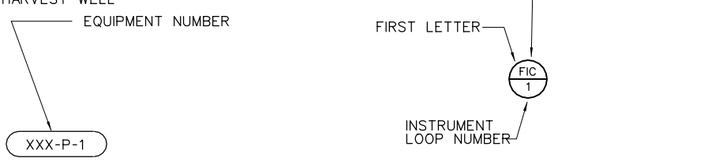

MECHANICAL EQUIPMENT CALLOUT

INSTRUMENT TAG NUMBER

SUPERVISORY CONTROL, ALARM, & DATA AQUISITION SYMBOLS

	INDICATOR/CONTROLLER/RECORDER OR ALARM NORMALLY ACCESSIBLE TO OPERATOR FROM MMI.
	INTERNAL FUNCTION NOT NORMALLY ACCESSIBLE TO OPERATOR
— - — -	DATA LINK
1	GENERALIZED FOR COMPLEX INTERLOCK LOGIC PERFORMED IN SOFTWARE. SEE SCHEMATICS OR SPECIFICATIONS FOR DETAILS.

MISCELLANEOUS ABBREVIATIONS

AM	AUTO/MANUAL	NOR/BU	NORMAL/BACKUP
A. S.	AIR SUPPLY FROM SERVICE AIR SYSTEM	N.C.	NORMALLY CLOSED
ATM	ATMOSPHERE	N.O.	NORMALLY OPEN
CB	CIRCUIT BREAKER	OC	OPEN/CLOSE
DEV	DEVIATION	OL	OVERLOAD
F.C.	FAIL CLOSED	OLH	OFF/LOW/HIGH
F.O.	FAIL OPEN	OSC	OPEN/STOP/CLOSE
FR	FORWARD/REVERSE	PCT	PERCENT
HA	HAND/AUTOMATIC	PLC	PROGRAMMABLE CONTROLLER
H/L	HOST/LOCAL	POT.	POTENTIONMETER
HOA	HAND/OFF/AUTOMATIC	RDY	READY
HOR	HAND/OFF/REMOTE	REM	REMOTE
HYD	HYDRAULIC	RIO	REMOTE INPUT / OUTPUT
ID	INCREASE/DECREASE	RSL	RAISE/STOP/LOWER
IOE	INTERNAL/OFF/EXTERNAL	RTU	REMOTE TERMINAL UNIT
KO	TIMER/OFF	SCD	STREAMING CURRENT DETECTOR
I/P	CURRENT TO PNEUMATIC	SD	SHUTDOWN
LCB	LOCAL CONTROL BOARD	SEL	SELECT
LCP	LOCAL CONTROL PANEL	S/M	STROKES/MINUTE
LOR	LOCAL/OFF/REMOTE	SOF	SLOW/OFF/FAST
LOS	LOCK/OUT/STOP	SP	SET POINT
LR	LOCAL/REMOTE	S/S	START/STOP
MCB	MAIN CONTROL BOARD	TOP	TEST/OFF/PLC
MCC	MOTOR CONTROL CENTER	TSP	TWISTED SHIELDED PAIR
MMI	MAN-MACHINE INTERFACE	VFD	VARIABLE FREQUENCY DRIVE

INSTRUMENT IDENTIFICATION TAG LETTERS

LETTER	FIRST LETTER: MEASURED OR INITIATING VARIABLE	FIRST LETTER: MODIFIER	SUCCEEDING LETTERS: READOUT OR PASSIVE FUNCTION	SUCCEEDING LETTERS: OUTPUT FUNCTION	SUCCEEDING LETTERS: MODIFIER
A	ANALYSIS		ALARM		
B	BURNER FLAME		USER'S CHOICE	USER'S CHOICE	USER'S CHOICE
C	CONDUCTIVITY (ELECTRICAL)			CONTROLLER	CLOSED
D	DENSITY	DIFFERENTIAL			
E	VOLTAGE (EMF)		PRIMARY ELEMENT		
F	FLOW	RATIO			
G	GAGING (DIMENSIONAL)		GLASS		
H	HAND (MANUALLY INITIATED)				HIGH
I	CURRENT (ELEC)		INDICATE		
J	POWER	SCAN			
K	TIME OR TIME SCHEDULE			CONTROL STA.	
L	LEVEL		LIGHT(PILOT)		LOW
M	MOISTURE OR HUMIDITY				MIDDLE OR INTERMEDIATE
N	TORQUE		ISOLATOR		
O	USER'S CHOICE		ORIFICE		OPEN
P	PRESSURE OR PNEUMATIC		POINT		
Q	QUANTITY	INTEGRATE TOTALIZE			
R	RADIOACTIVITY		RECORD OR PRINT		
S	SPEED / FREQUENCY			SWITCH	
T	TEMPERATURE			TRANSMITTER	
U	MULTIVARIABLE		MULTIFUNCTION	MULTIFUNCTION	MULTIFUNCTION
V	VISCOSITY			VALVE DAMPER OR LOUVER	
W	WEIGHT OR FORCE		WELL		
X	UNCLASSIFIED		UNCLASSIFIED	UNCLASSIFIED	UNCLASSIFIED
Y	EVENT, STATE OR PRESENCE			RELAY OR COMPUTE	
Z	POSITION				

Cl	CHLORINE RESIDUAL	O_3	OZONE
HC	HYDROCARBON	D.O.	DISSOLVED OXYGEN
pH	HYDROGEN ION CONCENTRATION	SCU	STREAMING CURRENT UNIT
Tu	TURBIDITY		
SS	SUSPENDED SOLIDS		
O_2	OXYGEN CONCENTRATION		
SCD	STREAMING CURRENT DETECTOR		

SAMPLE LOOP DIAGRAM - MINIMUM REQUIRED

DISPLAY BLOCK CONFIGURATION
(PER MANUFACTURER STD.)

INSTRUMENT TAG NO.	FI-01	
TYPE	IND	
AREA GROUP-LOOP (AGL)		
LABEL NO. 1	SECOND	
LABEL NO. 2	FLOW	
LABEL NO. 3	(HIGH)	
(PER MANUFACTURER STD.)		

CONTROL BLOCK CONFIGURATION
(PER MANUFACTURER STD.)

BLOCK	B-XX	B-XX
NAME	ALARM	CALC
TRACK		
(PER MANUFACTURER STD.)		

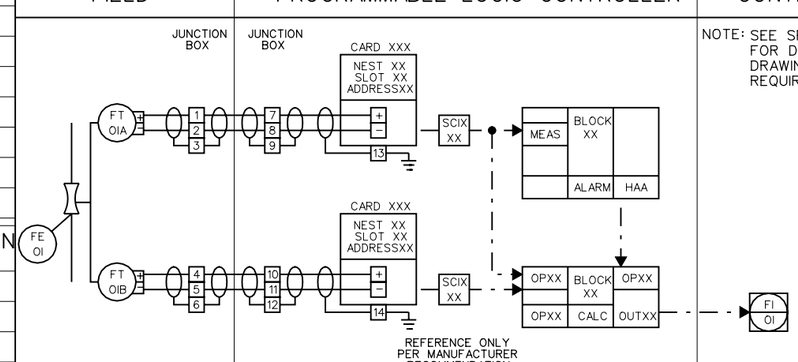

NOTE: SEE SPECIFICATION FOR DETAILS OF SHOP DRAWING SUBMITTAL REQUIREMENTS.

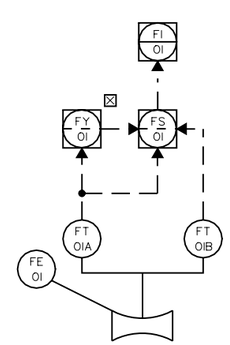

P & ID PRESENTATION

NOTES

1. ADDITIONAL INSTRUMENTATION AND CONTROL SYMBOLS MAY BE USED AS REQUIRED. SYMBOLS AND NOMENCLATURE ARE BASED ON ISA STANDARD S 5.1.
2. SEE ASSOCIATED ELECTRICAL AND MECHANICAL SYMBOL SHEETS FOR ADDITIONAL SYMBOLS AND ABBREVIATIONS.
3. FOR DETAILS OF METER COUPLING AND OTHER MECHANICAL EQUIPMENT (e.g. VALVES, PUMPS, ETC.) SEE MECHANICAL DRAWINGS AND SPECIFICATIONS.
4. SYSTEM INTEGRATOR TO MEET THE PARTICULAR CHARACTERISTICS (e.g. VOLTAGE AND CURRENT REQUIREMENTS) OF COMPONENTS IN EACH LOOP OR SYSTEM.
5. ALL FIELD SWITCHES FOR ELECTRIC MOTOR OPERATION WILL BE SUPPLIED UNDER THE ELECTRICAL SPECIFICATIONS. EXCEPTIONS ARE WHEN SWITCHES ARE MOUNTED ON PANELS OR PART OF VENDOR PACKAGES. ALL ELECTRIC ACTUATORS ON VALVES, SLUICE GATES, ETC. ARE SUPPLIED WITH THE EQUIPMENT BY THE EQUIPMENT SUPPLIERS.

REGISTERED PROFESSIONAL ENGINEER DAVID WILCOXSON NO. C31069 Exp. 9-30-06 CONTROL SYSTEMS STATE OF CALIFORNIA

REV	DATE	BY	DESCRIPTION

SCALE

WARNING
0 1/2 1
IF THIS BAR DOES NOT MEASURE 1" THEN DRAWING IS NOT TO SCALE

DESIGNED D. WILCOXSON
DRAWN D. WILCOXSON
CHECKED K. CREAGER

SUBMITTED BY
JOHN A. BERGEN — C31069 LICENSE NO. — 2/16/2004 DATE
STEVE J. HYLAND — C23892 LICENSE NO. — 2/16/2004 DATE

DIGALERT DIAL TOLL FREE 1-800-642-2444 AT LEAST TWO DAYS BEFORE YOU DIG UNDERGROUND SERVICE ALERT OF NORTHERN CALIFORNIA

LOS OSOS COMMUNITY SERVICES DISTRICT

MWH Walnut Creek, California

LOS OSOS WASTEWATER PROJECT

INSTRUMENTATION SYMBOLS AND ABBREVIATIONS – 1

SHEET BC-GI-200

Plot Date: 06-FEB-2004 16:0$$time$$
File: N:\Projects\los_osos\Collect_Sys\PS\ins\BC-GI-200.dgn
Job No: 1481166

PUMP AND COMPRESSOR SYMBOLS

- CENTRIFUGAL PUMP
- CENTRIFUGAL WET PIT PUMP OR TURBINE PUMP
- CHEMICAL FEED PUMP
- FEED GRINDER
- GEAR PUMP OR BLOWER (POSITIVE DISPLACEMENT)
- PISTON PUMP
- VERTICAL TURBINE PUMP
- PROGRESSIVE CAVITY PUMP
- SUBMERSIBLE SUMP PUMP
- COMPRESSOR (CENTRIFUGAL) OR TURBINE MOTOR
- COMPRESSOR (PISTON)
- EJECTOR
- BLOWER
- AERATOR
- FEED PUMP

MISCELLANEOUS SYMBOLS

- BLIND FLANGE
- AIR GAP
- DRAIN
- INLINE MIXER
- PULSATION DAMPENER
- HORN
- UNION
- SLIDE GATE
- FLEXIBLE CONNECTION
- PIPE CALL-OUT
- STRAINER
- BACKFLOW PREVENTER
- RUPTURE DISK
- MIXER
- ELECTRIC MOTOR
- RADIO ANTENNA
- DEMISTER
- AIR FILTER
- WATER LEVEL
- CONCENTRIC REDUCER
- QUICK DISCONNECT
- THREADED CAP
- EJECTOR

PRIMARY ELEMENT SYMBOLS

- VENTURI FLOWMETER
- ORIFICE FLOWMETER
- MAGNETIC FLOWMETER
- PROPELLER FLOWMETER
- PITOT TUBE
- SONIC FLOWMETER
- VORTEX FLOWMETER
- VARIABLE AREA FLOW INDICATOR (ROTAMETER)
- OPTIONAL THROTTLE VALVE
- PARSHALL FLUME
- SONIC LEVEL SENSOR
- TIPPING FLOAT LEVEL SWITCH
- INDUCTIVE RELAY LEVEL SWITCH
- INVERTED COLUMN LEVEL SWITCH
- BUBBLER
- SUSPENSION CABLE LEVEL SWITCH
- PRESSURE TRANSMITTER WITH DIAPHRAM SEAL
- TEMPERATURE ELEMENT WITH WELL
- SUSPENDED SENSOR LEVEL TRANSMITTER
- HYDRALIC WEIGHT TRANSMITTER
- ANNULAR SEAL

VALVE SYMBOLS

- BUTTERFLY
- SILENT CHECK
- SWING CHECK
- BALL CHECK
- PLUG VALVE
- BALL VALVE
- GATE
- GLOBE
- DIAPHRAGM
- NEEDLE
- AIR RELEASE OR AIR/VACUUM VALVE
- PRESSURE RELIEF OR SAFETY
- PRESSURE REGULATOR
- 3-WAY
- WEIGHT BALANCED VALVE
- ANGLE VALVE
- DAMPER

VALVE ACTUATORS

- SOLENOID
- ROTARY MOTOR
- DIAPHRAGM
- DIAPHRAGM WITH ATTACHED ELECTRO-PNEUMATIC CONVERTER
- DUAL CHAMBER HYDRAULIC OR PNEUMATIC CYLINDER

REGISTERED PROFESSIONAL ENGINEER DAVID WILCOXSON NO. 57213 Exp. 9-30-06 CONTROL SYSTEMS STATE OF CALIFORNIA

REV	DATE	BY	DESCRIPTION

SCALE

WARNING: 0 1/2 1 — IF THIS BAR DOES NOT MEASURE 1" THEN DRAWING IS NOT TO SCALE

DESIGNED D. WILCOXSON
DRAWN D. WILCOXSON
CHECKED K. CREAGER

SUBMITTED BY
JOHN A. BERGEN — C31069 LICENSE NO. — 2/16/2004 DATE
STEVE J. HYLAND — C23892 LICENSE NO. — 2/16/2004 DATE

DIGALERT — DIAL TOLL FREE 1-800-642-2444 AT LEAST TWO DAYS BEFORE YOU DIG — UNDERGROUND SERVICE ALERT OF NORTHERN CALIFORNIA

LOS OSOS COMMUNITY SERVICES DISTRICT

MWH Walnut Creek, California

LOS OSOS WASTEWATER PROJECT

INSTRUMENTATION SYMBOLS AND ABBREVIATIONS – 2

SHEET BC–GI–201

Job No: 1481166 File: N:\Projects\los_osos\Collect_Sys\PS\ins\BC-GI-201.dgn Plot Date: 06-FEB-2004 16:0$$time$$

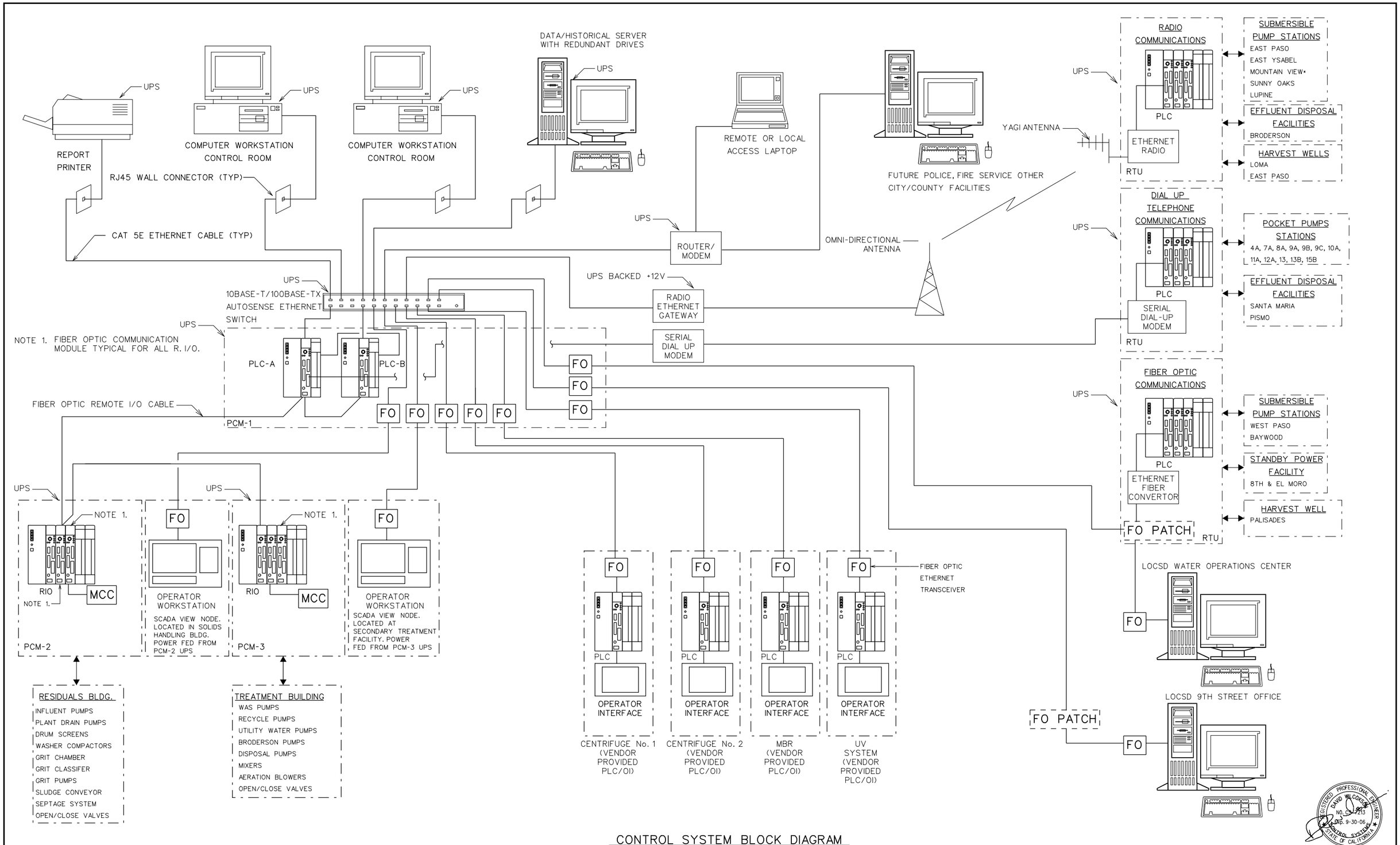

CONTROL SYSTEM BLOCK DIAGRAM

REV	DATE	BY	DESCRIPTION

SCALE

WARNING: 0 1/2 1 — IF THIS BAR DOES NOT MEASURE 1" THEN DRAWING IS NOT TO SCALE

DESIGNED D. WILCOXSON
DRAWN D. WILCOXSON
CHECKED K. CREAGER

SUBMITTED BY
JOHN A. BERGEN — C31069 LICENSE NO. — 2/16/2004 DATE
STEVEN J. HYLAND — C23892 LICENSE NO. — 2/16/2004 DATE

DIGALERT — DIAL TOLL FREE 1-800-642-2444 AT LEAST TWO DAYS BEFORE YOU DIG — UNDERGROUND SERVICE ALERT OF NORTHERN CALIFORNIA

LOS OSOS COMMUNITY SERVICES DISTRICT

MWH Walnut Creek, California

LOS OSOS WASTEWATER PROJECT

INSTRUMENTATION SCADA SYSTEM ARCHITECTURE

SHEET BC-GI-202

Plot Date: 06-FEB-2004 16:0$$time$$
File: N:\Projects\los_osos\Collect_Sys\PS\ins\BC-GI-202.dgn
Job No: 1481166

MAN HOLE & PULL BOX MINIMUM INSIDE DIMENSIONS

NAME	DIMENSIONS (LxWxD)
MH-1	3'0" x 5'0"x 6'0"
MH-2	3'0" x 5'0"x 6'0"
MH-3	3'0" x 5'0"x 6'0"
MH-4	3'0" x 5'0"x 6'0"
MH-5	3'0" x 5'0"x 6'0"
MH-6	3'0" x 5'0"x 6'0"
MH-7	3'0" x 5'0"x 6'0"
MH-8	3'0" x 5'0"x 6'0"
MH-9	3'0" x 5'0"x 6'0"
MH-10	3'0" x 5'0"x 6'0"
MH-11	3'0" x 5'0"x 6'0"
MH-12	3'0" x 5'0"x 6'0"
MH-13	3'0" x 5'0"x 6'0"
MH-14	3'0" x 5'0"x 6'0"
MH-15	3'0" x 5'0"x 6'0"
MH-16	3'0" x 5'0"x 6'0"
PB-1	3'0" x 5'0"x 4'6"
PB-2	3'0" x 5'0"x 4'6"

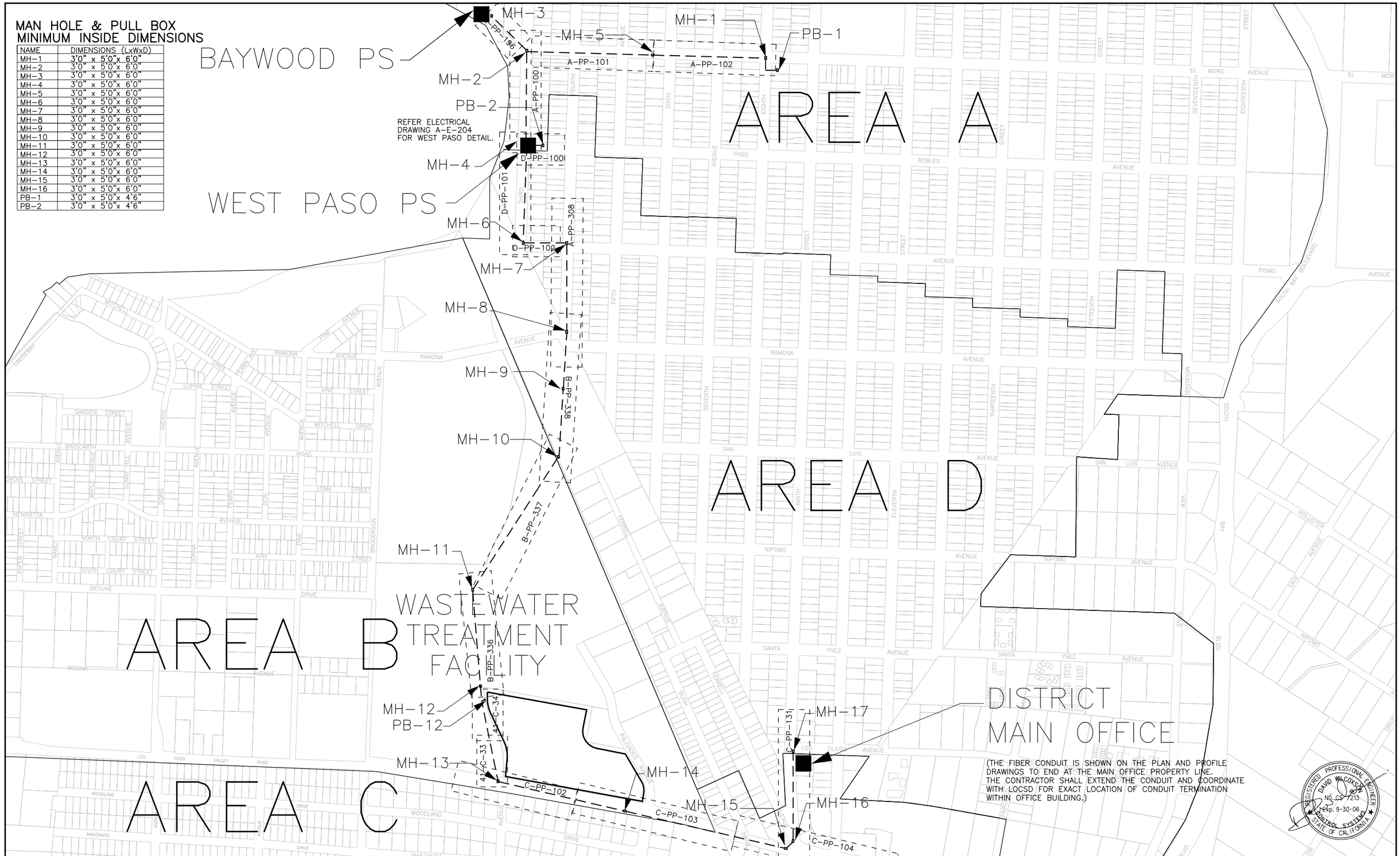

REV	DATE	BY	DESCRIPTION

SCALE

WARNING 0 1/2 1 — IF THIS BAR DOES NOT MEASURE 1" THEN DRAWING IS NOT TO SCALE

DESIGNED D. WILCOXSON
DRAWN D. WILCOXSON
CHECKED K. CREAGER

SUBMITTED BY
JOHN A. BERGEN — C31069 LICENSE NO. — 2/16/2004 DATE
STEVE J. HYLAND — C23892 LICENSE NO. — 2/16/2004 DATE

DIGALERT — DIAL TOLL FREE 1-800-642-2444 AT LEAST TWO DAYS BEFORE YOU DIG — UNDERGROUND SERVICE ALERT OF NORTHERN CALIFORNIA

LOS OSOS COMMUNITY SERVICES DISTRICT

MWH Walnut Creek, California

LOS OSOS WASTEWATER PROJECT

INSTRUMENTATION FIBER OPTIC CONDUIT PLAN

SHEET BC-GI-203

Job No: 1481166 File: N:\Projects\los_osos\Collect_Sys\PS\ins\BC-GI-203.dgn Plot Date: 06-FEB-2004 16:0$$time$$

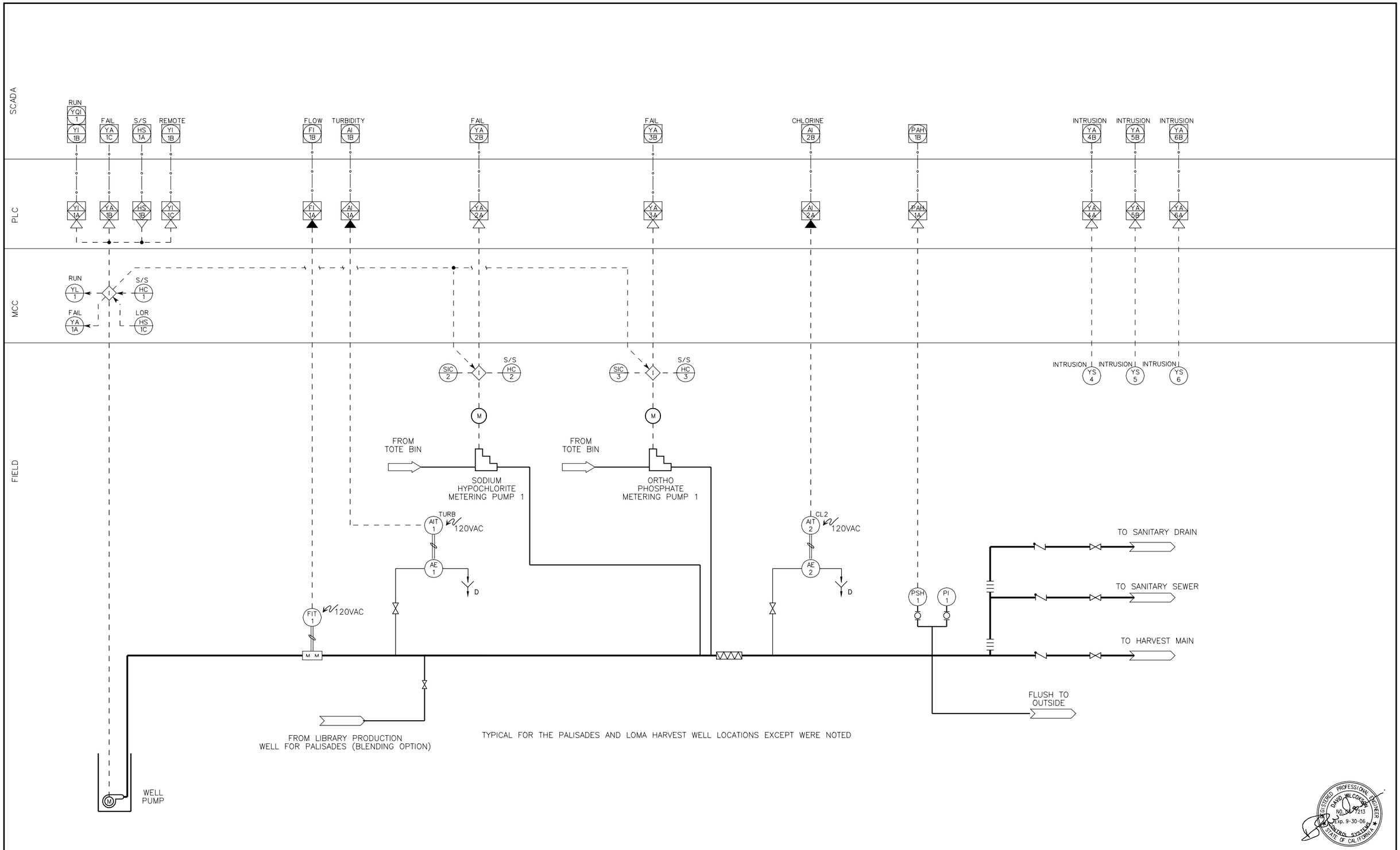

REGISTERED PROFESSIONAL ENGINEER
DAVID WILCOXSON
No. 56213
Exp. 9-30-06
CONTROL SYSTEMS
STATE OF CALIFORNIA

REV	DATE	BY	DESCRIPTION

SCALE: NONE

WARNING: 0 1/2 1 — IF THIS BAR DOES NOT MEASURE 1" THEN DRAWING IS NOT TO SCALE

DESIGNED D. WILCOXSON
DRAWN D. WILCOXSON
CHECKED K. CREAGER

SUBMITTED BY
JOHN A. BERGEN — C31069 LICENSE NO. — 2/16/2004 DATE
STEVE J. HYLAND — C23892 LICENSE NO. — 2/16/2004 DATE

DIGALERT — DIAL TOLL FREE 1-800-642-2444 AT LEAST TWO DAYS BEFORE YOU DIG — UNDERGROUND SERVICE ALERT OF NORTHERN CALIFORNIA

LOS OSOS COMMUNITY SERVICES DISTRICT

MWH Walnut Creek, California

LOS OSOS WASTEWATER PROJECT

INSTRUMENTATION
PALISADES AND LOMA
HARVEST WELLS P & ID

SHEET B-I-200

Job No: 1481166 File: N:\Projects\los_osos\Collect_Sys\PS\ins\B-I-200.dgn Plot Date: 06-FEB-2004 16:03 $$time$$

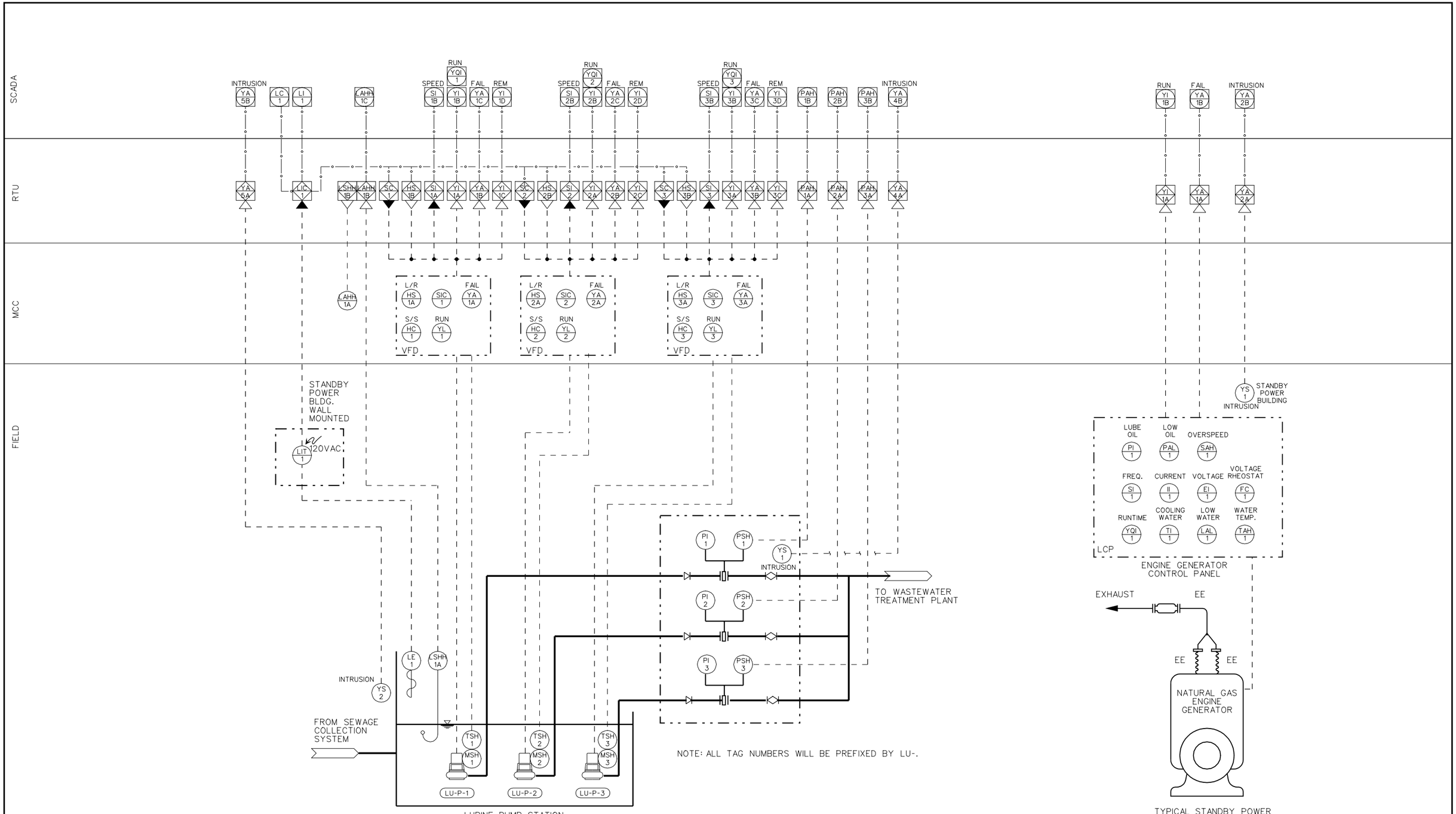

Job No: 1481166 File: N:\Projects\los_osos\Collect_Sys\PS\ins\B-I-201.dgn Plot Date: 06-FEB-2004 16:0$$time$$

REV	DATE	BY	DESCRIPTION

SCALE: NONE

WARNING: 0 1/2 1 — IF THIS BAR DOES NOT MEASURE 1" THEN DRAWING IS NOT TO SCALE

DESIGNED D. WILCOXSON
DRAWN D. WILCOXSON
CHECKED K. CREAGER

SUBMITTED BY
JOHN A. BERGEN — C31069 LICENSE NO. — 2/16/2004 DATE
STEVE J. HYLAND — C23892 LICENSE NO. — 2/16/2004 DATE

DIGALERT — DIAL TOLL FREE 1-800-642-2444 AT LEAST TWO DAYS BEFORE YOU DIG — UNDERGROUND SERVICE ALERT OF NORTHERN CALIFORNIA

LOS OSOS COMMUNITY SERVICES DISTRICT

MWH Walnut Creek, California

LOS OSOS WASTEWATER PROJECT

INSTRUMENTATION
LUPINE PUMP STATION P & ID

SHEET B-I-201

REGISTERED PROFESSIONAL ENGINEER — DAVID WILCOXSON — NO. C-51213 — Exp. 9-30-06 — CONTROL SYSTEMS — STATE OF CALIFORNIA

Harvest Wells

AREA	HARVEST WELL	LOCATION	NO. OF PUMPS	PUMP NO.	RTU/LCP NO.	PLC								
						YI	YA	HS	AI (TURB)	YA (FAIL)	AI (CL2)	FI	PAH	YA (DOOR INTRUSION)
B	Palisades Harvest Well (PA)	Palisades Ave. & Los Osos Valley Rd.	1	PA-P-1	20	PA-YI-1A	PA-YA-1B	PA-HS-1B	PA-AI-1A	PA-YA-2A & 3A	PA-AI-2A	PA-FI-1A	PA-PAH-1A	PA-YA-4A, 5A & 6A
B	Loma Harvest Well (LO)	Loma St. & Broderson Ave.	1	LO-P-1	21	LO-YA-1A	LO-YA-1B	LO-HS-1B	LO-AI-1A	LO-YA-2A & 3A	LO-AI-2A	LO-FI-1A	LO-PAH-1A	LO-YA-4A, 5A & 6A

SODIUM HYPOCHLORITE PUMP		ORTHO PHOSPHATE PUMP		FIELD								MCC			
SIC	HC (S/S)	SIC	HC (S/S)	AE (TURB)	AIT (TURB)	AE (CL2)	AIT (CL2)	FE	FIT	PSH	PI	YL (RUN)	YA (FAIL)	HC (S/S)	HS (LOR)
PA-SIC-2	PA-HC-2	PA-SIC-3	PA-HC-3	PA-AE-1	PA-AIT-1	PA-AE-2	PA-AIT-2	PA-FE-1	PA-FIT-1	PA-PSH-1	PA-PI-1	PA-YL-1	PA-YA-1A	PA-HC-1	PA-HS-1C
LO-SIC-2	LO-HC-2	LO-SIC-3	LO-HC-3	LO-AE-1	LO-AIT-1	LO-AE-2	LO-AIT-2	LO-FE-1	LO-FIT-1	LO-PSH-1	LO-PI-1	LO-YL-1	LO-YA-1A	LO-HC-1	LO-HS-1C

SCADA							
YI	YQI	YA	HS	AI (TURB)	AI (CL2)	FI	PAH
PA-YI-1B	PA-YQI-1	PA-YA-1C	PA-HS-1A	PA-AI-1B	PA-AI-2B	PA-FI-1B	PA-PAH-1B
LO-YI-1B	LO-YQI-1	LO-YA-1C	LO-HS-1A	LO-AI-1B	LO-AI-2B	LO-FI-1B	LO-PAH-1B

Standby Power

AREA	ENGINE GENERATOR	LOCATION	GEN. NO.	RTU/LCP NO.	FIELD											PLC		SCADA	
					YQI	TI	LAL	TAH	SI	II	EI	FC	PI	PAL	SAH	YI	YA	YI	YA
B	Lupine (ELU)	Lupine & Donna Ave	ELU-GEN-1	18	ELU-YQI-1	ELU-TI-1	ELU-LAL-1	ELU-TAH-1	ELU-SI-1	ELU-II-1	ELU-EI-1	ELU-FC-1	ELU-PI-1	ELU-PAL-1	ELU-SAH-1	ELU-YI-1A	ELU-YA-1A	ELU-YI-1B	ELU-YA-1B

REGISTERED PROFESSIONAL ENGINEER
DAVID WILCOXSON
NO. C31213
EXP. 9-30-06
INSTRUMENTATION & CONTROL SYSTEMS
STATE OF CALIFORNIA

REV	DATE	BY	DESCRIPTION

SCALE

WARNING
0 1/2 1
IF THIS BAR DOES NOT MEASURE 1" THEN DRAWING IS NOT TO SCALE

DESIGNED D. WILCOXSON
DRAWN D. WILCOXSON
CHECKED K. CREAGER

SUBMITTED BY
JOHN A. BERGEN — C31069 LICENSE NO. — 2/16/2004 DATE
STEVE J. HYLAND — C23892 LICENSE NO. — 2/16/2004 DATE

DIGALERT — DIAL TOLL FREE 1-800-642-2444 AT LEAST TWO DAYS BEFORE YOU DIG — UNDERGROUND SERVICE ALERT OF NORTHERN CALIFORNIA

LOS OSOS COMMUNITY SERVICES DISTRICT

MWH Walnut Creek, California

LOS OSOS WASTEWATER PROJECT

INSTRUMENTATION
AREA B INSTRUMENT SCHEDULES

SHEET
B-I-202

Job No: 1481166 File: N:\Projects\los_osos\Collect_Sys\PS\ins\B-I-202.dgn Plot Date: 06-FEB-2004 16:0$$time$$

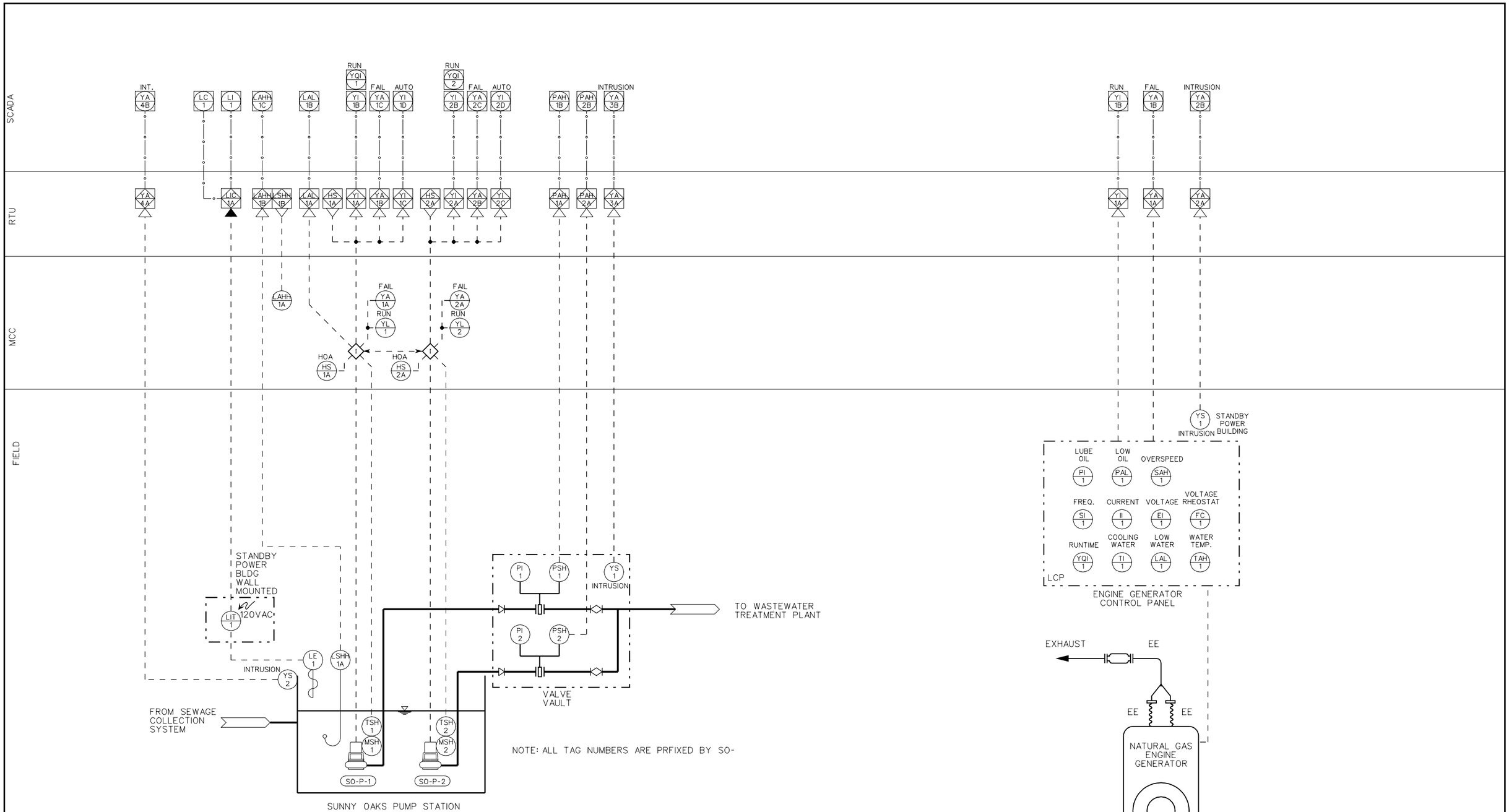

Job No: 1481166 File: N:\Projects\los_osos\Collect_Sys\PS\ins\C-I-200.dgn Plot Date: 06-FEB-2004 16:0$$time$$

REV	DATE	BY	DESCRIPTION

SCALE: NONE

WARNING: 0 1/2 1 — IF THIS BAR DOES NOT MEASURE 1" THEN DRAWING IS NOT TO SCALE

DESIGNED D. WILCOXSON
DRAWN D.WILCOXSON
CHECKED K.CREAGER

SUBMITTED BY
JOHN A. BERGEN — C31069 LICENSE NO. — 2/16/2004 DATE
STEVE J. HYLAND — C23892 LICENSE NO. — 2/16/2004 DATE

DIGALERT — DIAL TOLL FREE 1-800-642-2444 AT LEAST TWO DAYS BEFORE YOU DIG — UNDERGROUND SERVICE ALERT OF NORTHERN CALIFORNIA

LOS OSOS COMMUNITY SERVICES DISTRICT

MWH Walnut Creek, California

LOS OSOS WASTEWATER PROJECT

INSTRUMENTATION
SUNNY OAKS PUMP STATION P & ID

SHEET C-I-200

REGISTERED PROFESSIONAL ENGINEER — DAVID WILCOXSON — NO. 57213 — Exp. 9-30-06 — CONTROL SYSTEMS — STATE OF CALIFORNIA

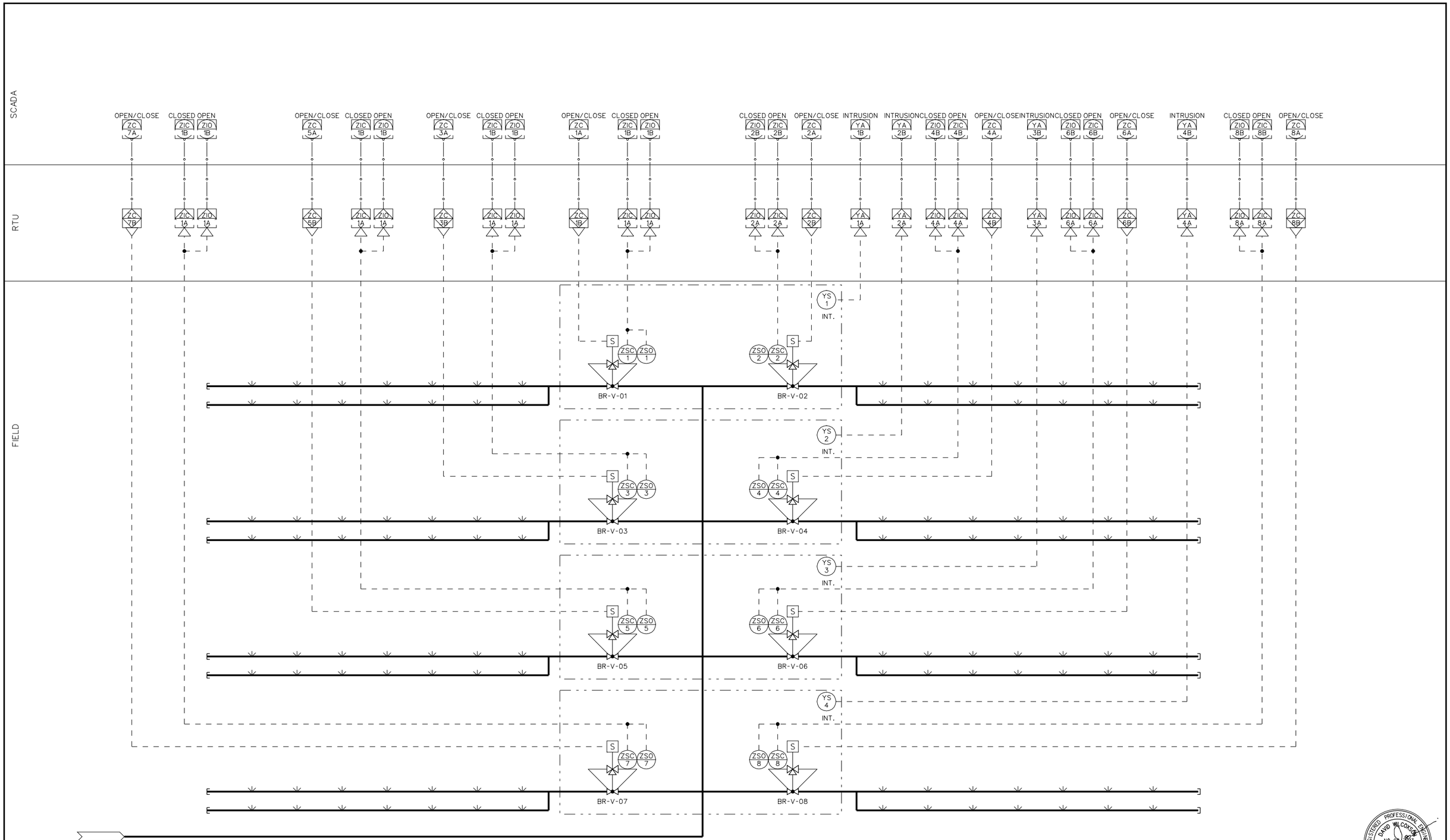

REGISTERED PROFESSIONAL ENGINEER DAVID WILCOXSON NO. C31069 Exp. 9-30-06 CONTROL SYSTEMS STATE OF CALIFORNIA

REV	DATE	BY	DESCRIPTION

SCALE: NONE

WARNING: 0 1/2 1 — IF THIS BAR DOES NOT MEASURE 1" THEN DRAWING IS NOT TO SCALE

DESIGNED D. WILCOXSON
DRAWN D. WILCOXSON
CHECKED K. CREAGER

SUBMITTED BY
JOHN A. BERGEN — C31069 LICENSE NO. — 2/16/2004 DATE
STEVE J. HYLAND — C23892 LICENSE NO. — 2/16/2004 DATE

DIGALERT — DIAL TOLL FREE 1-800-642-2444 AT LEAST TWO DAYS BEFORE YOU DIG — UNDERGROUND SERVICE ALERT OF NORTHERN CALIFORNIA

LOS OSOS COMMUNITY SERVICES DISTRICT

MWH Walnut Creek, California

LOS OSOS WASTEWATER PROJECT

INSTRUMENTATION
BRODERSON EFFLUENT DISPOSAL
SITE P & ID

SHEET C-I-201

Job No: 1481166 File: N:\Projects\los_osos\Collect_Sys\PS\ins\C-I-201.dgn Plot Date: 06-FEB-2004 16:0$$time$$