STANDARD PLANS AND SPECIFICATIONS

LOS OSOS COMMUNITY SERVICES DISTRICT

APPROVED

TABLE OF CONTENTS

CHAPTER		PAGE NUMBER
1	GENERAL REQUIREMENTS	1
1.1	Purpose	1
1.2	Definitions	1
1.3	Alternate Standards	2
1.4	Permits	2
1.5	Safety	3
1.6	Construction Progress	4
1.7	Final Acceptance	5
2	CONSTRUCTION PLANS	7
2.1	Plans Required	7
2.2	Responsibility	7
2.3	Standard Improvement Plan Format	7
2.4	Plan Approval	8
2.5	Plan Changes	8
2.6	Record Drawings	8
3	SEWER IMPROVEMENTS	9
3.1	Design Standards	9
3.2	Location and Alignment	10
3.3	Pre-treatment	10
3.4	Gravity Sewers	10
3.5	Sewage Pump Stations	11
3.6	Sewer Lateral	12
3.7	Sewer Manholes	13
3.8	Laying Sewer Pipe	14
3.9	Discharge into Sewers	15
3.10	Testing of Sewer Mains	15
4	WATER IMPROVEMENTS	18
4.1	Design Standards	18
4.2	Location and Alignment	18
4.3	Separation from Sewer	19
4.4	Cross Connections	22
4.5	Water Main	22
4.6	Trenching and Backfill	24
4.7	Laying Water Pipe	27
4.8	Valves	27
4.9	Fire Hydrant Assemblies	27
4.10	Blow-offs	28
4.11	Air and Vacuum Release Valves	28

TABLE OF CONTENTS

CHAPTER PAGE NUMBER

4.12 Water Services 28
4.13 Testing 28

INDEX TO STANDARD DRAWINGS

A SEWER STANDARD DRAWINGS
- S-1 Standard Sewer Manhole
- S-1a Pre-Cast Base Sewer Manhole
- S-2 Sewer Drop Manhole
- S-3 Cul-De-Sac Sewer Manhole
- S-4 Sewer Cleanout
- S-5 Sewer Lateral
- S-6 Sewer Backflow Prevention Device

B WATER STANDARD DRAWINGS
- W-1 Fire Hydrant Assembly
- W-2 Fire Hydrant Location
- W-3 Water Valve
- W-4 Thrust Blocks
- W-5 Single Water Service
- W-5a Single Water Service
- W-6 Duplex Water Service
- W-7 Water Service Location
- W-8 Multiple Water Service Manifold
- W-9 Water Blow-Off
- W-10 Water and Sewer Trench
- W-11 Water and Sewer Separation Notes
- W-12 Water and Sewer Separation Diagram
- W-13 Air and Vacuum Release Assembly
- W-14 Water Sampling Station
- W-15 Double Check Valve Assembly
- W-16 Reduced Pressure Valve Assembly

C UTILITY STANDARD DRAWINGS
- U-1 Utilities Location

D STANDARD CONSTRUCTION NOTE DRAWINGS
- N-1 Standard Construction Notes
- N-2 Standard Construction Notes
- N-3 Engineer's Certification

CHAPTER 1
GENERAL REQUIREMENTS

1.1 PURPOSE

The purpose of these Standards and Specifications is to provide minimum standards for the design, methods of construction, kinds and uses of materials, and the preparation of plans for construction, repair, replacement, modification and/or alteration of District facilities for sewer and water within the LOCSD.

The objective of the standards incorporated herein is to ensure the proper design, specification and installation of water and sewer improvements constructed within the District. Any items which are not included in these Standards shall be constructed in accordance with the County Standards, or as approved by the LOCSD and/or District Engineer.

1.2 DEFINITIONS

In these Standard Specifications and Drawings, the intent and meaning of the terms that are used shall be as defined below.

A. ***Applicant*** - Shall mean the person(s) constructing improvements for eventual acceptance by the LOCSD. The Applicant may also be referred to as the developer or property owner.

B. ***ASTM*** - Shall mean the American Society of Testing Materials, the Standards (or latest revision) thereof.

C. ***AWWA*** - Shall mean the American Water Works Association, the Standards (or latest revision) thereof.

D. ***Consultant*** - Shall mean any person or persons, firm, partnership or corporation legally authorized to practice civil engineering in the State of California who prepares or submits improvement plans and specifications on behalf of an Applicant to the LOCSD.

E. ***Contractor*** - Shall mean any person or persons, firm, partnership, corporation or combination thereof who has/have entered into a contract with any person, corporation, company, or the LOCSD, for the construction of any improvement or portion of any improvement within the LOCSD boundary.

F. ***County Standards*** - The Standards and Specifications for the County of San Luis Obispo Engineering Department, latest edition.

G. ***District*** - Shall mean the Los Osos Community Services District.

H. ***Engineer*** - Shall mean the Professional Engineer designated by the LOCSD to act as the LOCSD District Engineer.

I. ***Engineer-of-Record*** - Shall mean any person or persons, firm, partnership or corporation legally authorized to practice civil engineering in the State of California who prepares and certifies the As-Built Drawings of the final construction. Usually the Engineer-of-Record is also the Consultant.

J. ***Improvements*** - Any or all work submitted, or expected to be submitted to the LOCSD for acceptance into the LOCSD system.

K. ***State*** - When State Standards are applicable, the word "State" as used in the State Standards shall mean the LOCSD.

L. ***State Standards*** - Shall mean the latest edition of the Standard Specifications of the State of California, Department of Transportation (Caltrans).

M. ***UBC*** - Shall mean Uniform Building Code, as adopted by the LOCSD.

N. ***UFC*** - Shall mean Uniform Fire Code, as adopted by the LOCSD.

O. ***UPC*** - Shall mean Uniform Plumbing Code, as adopted by the LOCSD.

1.3 ALTERNATE STANDARDS

Alternate materials or methods of construction may be accepted by the LOCSD on a case-by-case basis in lieu of these Standards; provided the proposed alternate is of equal or greater utility and quality and provides no threat to public health or safety. Alternates shall not be used until first approved in writing by the District.

1.4 PERMITS

A. ***LOCSD Permits.*** Any Contractor and/or Applicant wishing to do work under these Standards and Specifications shall first obtain a permit or approved plans from the District. If such permit or approved plans has not been obtained, the work shall be stopped at the direction of the District or the Utility System Manager, who may cause the work already completed to be removed and the site restored to its original condition. The Contractor's attention is also directed to the District's rules and regulations. The Contractor shall submit a Contract Declaration form prior to obtaining a permit.

B. ***County & State Permits.*** Any Contractor performing work within the County (or State) right-of-way shall also obtain a County (or State) encroachment permit, which may include requirements beyond those contained in these Specifications.

C. ***CAL/OSHA***. Any Contractor doing excavations of 5 feet or more in depth shall possess a current CAL/OSHA permit. A copy of such permit shall be presented to the District upon request.

D. ***State License***. Any Contractor performing work under these specifications shall possess an appropriate, valid state license to perform such work. The Contractor or his duly authorized representative must be available on the job site during the time when any work is in progress. If such is not the case, work shall be stopped at the direction of the District.

1.5 SAFETY

The Contractor shall assume all responsibility for job site safety during construction and shall agree to hold the LOCSD harmless in conformance with construction safety requirements. OSHA and CAL/OSHA requirements must be met at all times. It is the Contractor's responsibility to ensure that only certified, competent personnel are employed on excavation/confined space projects in accordance with applicable Standards. Additionally, all work performed shall conform to the requirements of either the State of California Construction Safety Orders, or the Federal Safety Codes, whichever are more stringent.

A. ***Excavations***. All excavations shall be performed, protected and supported as required for safety and in the manner set forth in the operations rules, orders and regulations set forth by the Division of Industrial Safety of the State of California.

B. ***Shoring Plan Required***. The Contractor shall submit and receive approval from the District of a detailed plan showing the design of shoring, bracing, sloping, or other provisions to be made for worker protection from the hazard of caving ground. Such plan shall be submitted at least 5 working days before the Contractor intends to begin work on the trench.

If such plan differs from the shoring system standards established by the Construction Safety Orders, the plan shall be prepared by a Registered Civil or Structural Engineer.

Nothing herein shall be deemed to allow the use of any shoring, sloping or protective system less effective than that required by the Construction Safety Orders.

C. ***Confined Spaces***. All work being performed on the sewage collection system, and other similar structures within the District shall meet the regulations and recommendations for confined spaces as prepared by OSHA.

D. ***Warning Signs***. All signs, signals, flares, barricades, flagmen, or other warning devices necessary for the protection and convenience of the public during the construction phase shall be furnished, installed and maintained by the Contractor in accordance with the latest edition of the State of California "Manual of Traffic Control." Signs and other traffic warning devices must be in accordance with the

latest edition of the State of California "Manual of Warning Signs, Lights, and Devices For Use in Performance of Work Upon Highways."

E. ***Stockpiles and Trenches.*** Excavated material shall be piled in such a manner that it will not endanger the work and will offer minimum obstruction to traffic. Open trenches and waste piles shall be adequately barricaded. Trenches in or adjacent to roadways shall be backfilled or properly protected with steel plates at the close of each working day.

1.6 CONSTRUCTION PROGRESS

A. ***Prior to Construction.*** No construction shall be allowed without improvement plans approved by the District. Construction started without approved plans is at the Contractors' own risk, and the District or Utility System Manager may require the improvements to be removed and the area restored to its original condition. In addition, the following are required prior to the start of construction.

1. Three (3) sets of approved plans shall be provided to the LOCSD.

2. An Engineers' cost estimate of the improvements which are subject to the LOCSD inspection.

3. An approved inspection deposit shall be paid in accordance with the District's rules and regulations.

4. An executed inspection agreement shall be provided in accordance with the District's rules and regulations.

5. A minimum 48 hours of notice shall be provided to the LOCSD.

6. Upon request by the District, a pre-construction conference shall be held. The preconstruction conference shall be attended by the Consultant, Contractor, and other involved agencies or utilities.

B. ***During Construction.*** All work being performed under these Specifications, or subject to District approval, shall be inspected or tested by the LOCSD inspector. In addition, tests shall be required to be performed or provided by the Contractor. The Contractor shall give all possible assistance to the LOCSD inspector, and shall provide full access to the construction in progress for the purposes of inspection. The inspection of the work shall not relieve the Applicant or Contractor of his obligation to construct the improvements in accordance with these Standards and the approved plans.

1. *Underground Utilities.* Prior to beginning any earthwork, the Contractor shall call "USA" line locators in order to locate any underground facilities at 1-800-642-2444.

2. *Engineer-of-Record.* The Applicant, at its sole expense, if required by the District Engineer, shall retain the services of a registered civil engineer for overseeing the construction of improvements. At a minimum, the Engineer-of-Record shall perform the following:

   (a) Conduct the pre-construction meeting, if needed.
   (b) Provide interpretation of the approved plans for the Contractor, as required.
   (c) Perform shop drawing review of materials and equipment supplied for
   the improvements.
   (d) Maintain and complete As-Built Drawings of the improvements.
   (e) Obtain LOCSD approval prior to the release of any revised drawings or specifications.
   (f) Provide certification that the Contractor's work conforms to the approved plans, specifications, and submittals. Said certification shall conform to the attached example.

3. *Work Schedule.* No work shall be performed on Saturday, Sunday, or any legal holiday without special arrangements, including overtime pay for LOCSD inspectors or staff time. Forty-eight hours notice will be required prior to beginning construction on any work subject to LOCSD inspection. All work shall be performed after 7:00 a.m. and before 5:00 p.m.

4. *Construction Water.* All water drawn from LOCSD facilities shall be metered and shall be subject to current LOCSD rules and regulation. Construction water shall only be drawn from facilities designated by the LOCSD as upper aquifer water. Construction water service may be terminated by the LOCSD if such action is necessary to maintain public health and safety of the water supply (including maintaining adequate minimum pressure in the system).

5. *Theft of Water.* Any unauthorized drawing of water from the LOCSD system is in violation of State Penal Code 498.

   Penal Code S498 specifically makes theft of water from a system operated by a utility or political subdivision a misdemeanor. Penal Code S592 makes taking of water from any canal, ditch, flume or reservoir a misdemeanor.

1.7 FINAL ACCEPTANCE

Except as specifically authorized by the District, facilities constructed which are to be operated or maintained by the LOCSD may not be placed into service or otherwise utilized until the improvements have been accepted by the LOCSD.

A. ***Final Inspection***. At the completion of construction, the Contractor may request a final inspection within 5 working days of the request. The District will inspect the improvements constructed under these specifications and note any defects or deficiencies. The Contractor will be notified of any deficiencies which require correction. After correction of the defects or deficiencies, a second final inspection will be scheduled.

Prior to requesting final inspection, the Contractor shall complete all required improvements, and shall thoroughly clean the site of all rubbish, excess material and equipment. All portions of the site shall be left in a neat and orderly condition satisfactory to the District.

In addition, the following are required prior to the final inspection:

1. District's Improvement Certification.
2. Soil testing reports.
3. Material Compliance reports, if any.
4. A reproducible mylar set and 2 blueprint sets of the As-Built Drawings approved by the District.
5. All applicable Operating and Maintenance Manuals and warranties.
6. A computer disk copy of improvement plans, when prepared by computer, in AutoCAD DWG format and/or ArcView format.
7. All necessary easements and right-of-way dedications.
8. All applicable fees shall be paid.
9. All construction shall pass the LOCSD final inspection.

B. ***Acceptance Notice***. When the Contractor has completed construction to the satisfaction of the District, and has submitted all required information necessary to obtain a successful final inspection, the District will so notify the Applicant and will recommend acceptance of the improvements by the District Board of Directors.

CHAPTER 2
CONSTRUCTION PLANS

2.1 PLANS REQUIRED

Complete plans and specifications for all proposed facilities, including any necessary dedications and easements, shall be submitted to the District for approval and must receive the required approval prior to the beginning of construction of any such improvements.

2.2 RESPONSIBILITY

Responsibility for the design of improvements is the sole obligation of the Consultant. Notwithstanding the requirements of these specifications, the Consultant shall comply with all Federal and State Laws, Local Ordinances or Resolutions, and generally accepted engineering practice. This responsibility shall apply even though errors, omissions or conflicts may have been overlooked in the review of the plans.

The District approval of the Consultant's plans does not relieve the Consultant of this obligation.

2.3 STANDARD IMPROVEMENT PLAN FORMAT

Improvement plans shall be prepared in accordance with the following standard format:

A. Plans shall be prepared on 24" x 36" Mylar sheets.
B. Lettering shall be Inked, clearly legible, and a minimum of 0.80" high.
C. "Sticky-back" adhesive details must be free of air pockets and wrinkles.
D. Minimum scales used on the plans shall be:
   1"= 40' for plan views
   1"= 4' or 10' vertical for profile views.
E. A composite utility plan shall be included for all Tract projects. For smaller projects such as Parcel Maps, the composite utility plan requirement may be waived by the District.
F. All right-of-way and easements shall be shown on the plans.
G. Existing topography shall be shown which indicates all pertinent topographic features that may effect the design. This shall include existing underground and overhead utilities.
H. On the first sheet of the plans, the following shall be shown:
   1. A vicinity map.
   2. The LOCSD Standard notes.
   3. A signature block for each utility.
   4. A signature block for the LOCSD Utility System Manager.
   5. A signature block for the LOCSD Engineer.
   6. Plans which exceed 2 sheets shall have a title sheet with a drawing index.

I. Plan and Profile sheets shall be drawn to scale, and shall show all facilities to be constructed, and their relationship to existing and future facilities within the construction area. Plan and Profile sheets shall show all existing or proposed:
   1. Sewer manholes, cleanouts, pipes, laterals, etc.
   2. Water valves, air releases, fire hydrants, pipes, services, sampling stations, etc.
   3. Storm drain system.
   4. Public utilities.
   5. Street or surface improvements.
   6. Profile sheets shall show water, sewer and storm drain pipes in full size, and shall clearly show all utility crossings.

J. The Consultant shall sign and seal all sheets of the plans.

2.4 PLAN APPROVAL

Plans submitted shall include a non-refundable fee as established by District Ordinance for checking plans, and upon receipt of non-refundable fee, the LOCSD will review the plans for conformance to these Standards and District requirements. Prior to the start of Construction, the Applicant shall provide the LOCSD with 3 copies of the improvement plans as approved by the LOCSD.

2.5 PLAN CHANGES

Any changes made to the plans after the LOCSD approval shall be approved by the Engineer-of-Record and the LOCSD by means of a written change order, and shall be specifically indicated and dated on the plans as a revision.

2.6 AS-BUILT DRAWINGS

During the progress of the work, the Consultant shall maintain one set of prints of the improvement plans showing all constructed changes from the original design. Each change shall be approved by the District before being made. Upon completion of the work, the Consultant shall revise the original tracings of the improvement plans to reflect all construction changes. The Consultant shall submit check prints of the As-Built Drawings to the District for review. After any required revisions are made and the District has approved the Drawings, the Consultant shall furnish the District with one reproducible mylar set and 2 blueprint sets of the completed As-Built Drawings. If the drawings were produced electronically, the consultant shall also provide an electronic copy of the As-Builts in Auto-CAD or other acceptable format.

CHAPTER 3
SEWER IMPROVEMENTS

3.1 DESIGN STANDARDS

A. ***Design Flow.*** As a minimum, an average flow of 300 gallons per day per single family residence (or equivalent) shall be used for sewer design. Peak flow shall be considered to be 2.5 times the average flow. Sewer pipes shall be sized to handle the peak flow when the pipe is flowing half full.

B. ***Grades.*** Sanitary sewer grades shall be designed to provide a minimum velocity of 2 feet per second when flowing at peak flow. The following table indicates the slopes which will provide that velocity when flowing half full, and these shall be used as the minimum standard for design. Lesser slopes may be approved by the District only when topography conditions preclude the use of these values. The District shall approve all such deviations from these standards.

MINIMUM SEWER GRADES	
Diameter	**Slope in Feet/Foot Minimum Acceptable Slope**
6"	.0050
8"	.0050
10"	.0025
12"	.0020
15"	.0015
18"	.0012
House Lateral	.0208 (1/4" per Foot)

Unless special provisions for erosion protection have been provided and approved by the District, design velocities for sanitary sewers shall not exceed 10 feet per second. The maximum design discharge shall not exceed the flow at critical slope and velocity. Sanitary sewers should not be designed for flow conditions at critical slope and velocity.

3.2 LOCATION AND ALIGNMENT

All sewer facilities designed for operation or maintenance by the LOCSD shall be constructed within a right-of-way dedicated for a public street or road, unless such location is deemed impractical by the District. Any sewer facilities not constructed in a public right-of-way shall be constructed within a recorded easement dedicated to the District. Easements shall be a minimum of 15 feet wide, and shall be in a form acceptable to the District.

A. ***Access***. Access for maintenance shall be provided for all sewer facilities. At a minimum, this shall require an all-weather access road to each manhole and cleanout. All weather access roads shall be within a public right-of-way or dedicated easement.

B. ***Curved Sewers***. Whenever possible, sewer lines shall be straight from manhole to manhole. In special circumstances, and with approval from the District, sewers may be curved horizontally in accordance with the manufacture's recommendations. When designing a curved sewer, the Consultant shall include the manufactures name and recommended practice for curving the sewer as a part of the construction documents. Sewers shall not be curved in the vertical direction.

When a sewer main is curved, the construction shall include a 10 gage tracer wire in the trench. The wire shall be terminated in a manner acceptable to the District.

C. ***Separation from Water Mains***. All new sewer mains, force mains, house service laterals and appurtenant items shall be installed in conformance with standards for separation from water facilities described in Section 4.3.

D. ***Depth***. The normal design depth of a sanitary sewer system shall be such as to obtain a cover of 36 inches for the house service lateral at the property line, and a minimum cover of 60 inches for sewer main, trunk, and interceptor sewer lines. Under certain topographic conditions lesser depths may be allowed by the District.

Sewer mains and laterals shall be designed so as to be useable by each lot without the need for an ejector pump. Exceptions may be granted by the District on a case-by-case basis.

3.3 PRE-TREATMENT

Where required, pretreatment devices (grease traps, monitoring manholes, etc.) shall be installed to prevent the discharge of sand, oil, grease, or other prohibited substances from entering the sewer system.

3.4 GRAVITY SEWERS

Normally, all new gravity sewer lines and fittings shall be PVC pipe. In special circumstances, the District may require that sewer pipe and fittings be Ductile Iron.

A. ***PVC Sewer Lines.*** Polyvinyl Chloride (PVC) Sewer lines up to 15-inches in diameter shall conform to ASTM D-3034 (SDR 35). PVC pipe 18 to 36 inches shall conform to ASTM F-794 (Vylon).

1. ***Joints.*** All pipe joints for PVC Sewer Lines shall be with elastomeric gaskets conforming to ASTM F-477. Wherever possible, PVC pipe shall have integral bell and spigots. Solvent weld joints and caulder type couplings shall not be used.

B. ***DIP Sewer Lines.*** Ductile Iron (DIP) Sewer lines and fittings for sewer mains shall conform to AWWA C-151, Class 53. Joints shall be an approved type mechanical joint.

C. ***Sewer Main Size.*** The minimum size for a sewer main shall be 6 inches inside diameter unless otherwise approved by the District.

D. ***Connection to Existing Main.*** A tie-in shall not be performed without notification to the LOCSD inspector. At the time of the tie-in, an inflatable plug shall be installed in the inlet of the nearest manhole upstream of the tie-in. If necessary to maintain service, the Contractor shall provide temporary pumping facilities.

Connections (tie-in) to existing sewer mains shall be constructed, as directed by the District Inspector, depending on the type of pipe being connected to.

E. ***Repairs.*** For new sewer construction, any damaged pipe shall be removed and replaced such that only new material in good condition and proper installation is provided. For existing LOCSD sewer mains, repairs to damaged sewer mains shall be completed, as directed by the District Inspector depending on the type of pipe being repaired.

F. ***Trenching and Backfill.*** Trenching and backfill for sewer main trenches shall be the same as for water mains (Section 4.6).

3.5 SEWAGE PUMP STATIONS

Sewer systems shall be designed to avoid the need for sewage pump stations wherever possible. Whenever the design of a sewer system requires the design of a sewage pump station, the design shall be given special consideration by the District. The Consultant shall submit a preliminary design for consideration prior to submitting completed design drawings.

A. ***Force Mains.*** Sewer force mains shall be Class 200 PVC pipe conforming to AWWA C-900. Construction and testing of the force main shall be in accordance with the requirements for water main construction. Upon installation of the force main, identification/warning tape marked "Sewer" shall be included in the trench backfill.

3.6 SEWER LATERALS

Separate service laterals shall be provided for each parcel of land. Homes (including secondary homes) or buildings under separate ownership, or occupied by separate tenants shall also be provided with separate laterals.

Exception: Guest houses (as defined by the County Building Code) shall not be required to have a separate lateral. Multi-Family projects served by a private system of sewer laterals may share a common connection to the sewer main, when approved by the District.

A. ***Maintenance.*** In accordance with adopted District policies, sewer laterals beyond the right-of-way are to be owned and maintained by the Property Owner. This maintenance responsibility includes the entire lateral from the right-of-way to the house connection.

B. ***Size of Lateral.*** The minimum size of sewer lateral to serve individual residences or commercial uses is 4 inches in diameter. The actual size of sewer laterals larger than 4 inches shall be determined by fixture unit calculations in accordance with the current edition of the UPC. Upon request by the District, the Consultant shall supply fixture unit calculations for a proposed sewer service.

C. ***Large Laterals.*** Laterals larger than 4 inches shall be connected to the sewer main at a manhole, unless otherwise approved by the District. All joints shall use elastomeric gasketed joints.

D. ***Existing Sewer Main.*** All sewer laterals connected to existing sewer mains shall be constructed in accordance with the Standard Drawings. For existing 6" and 8" sewer mains, a section of the main shall be removed, and a true wye inserted and connected with caulder type couplings. For existing 10" and 12" mains, a saddle shall be used. Laterals shall be constructed in accordance with Drawing S-5. All pvc pipe joints shall use elastomeric gasketed joints.

   New sewer laterals shall be inspected by the LOCSD from the sewer main to the house or building connection.

E. ***New Sewer Main.*** When a new main is being installed, all new laterals shall be installed at the same time. The new sewer laterals shall be connected to the main with a wye connection. Laterals shall be constructed in accordance with Drawing S-5. All joints shall use elastomeric gasketed joints.

F. ***Sewer Lateral Clean-outs.*** A one-way clean-out shall be installed at the property line per Standard Drawing S-5. Two-way clean-outs shall also be installed on private laterals beyond the right-of-way at 100-foot maximum spacing and where laterals change direction. A two-way clean-out shall be installed within two feet of the exterior building wall.

G. ***Curb Marking.*** In areas with curbs, the location of sewer lateral shall be marked with an "S"" on the face of the curb, as shown on Drawing S-5.

3.7 SEWER MANHOLES

Sewer manhole construction shall be watertight and shall conform to Drawing S-1. With approval by the District, sewer manholes may be constructed per Drawing S-1(a).

A. ***Ladders.*** Ladder rungs shall not be installed in manholes.

B. ***Manhole Spacing.*** The maximum spacing of manholes on sewer lines shall be as follows:

6" to 10" diameter	400'
12" to 24" diameter	500'
27" to 36" diameter	600'

A sewer on a curved alignment with a radius of less than 400' shall have manholes spaced at a maximum of 300' or adjusted to fit the individual case.

C. ***Future Stub Outs.*** A stub out for future mains shall be installed where the main can be expected to be extended. Short stub outs shall be a minimum of 10 feet, and when approved by the District, may be constructed without a clean out. Where a stub line on a sewer main exceeds 200 feet in length, a manhole shall be installed at the end. Where a stub line on a sewer main is less than 200 feet in length, a clean-out may be installed conforming to Standard Drawing S-4.

D. ***Manhole Elevations.*** Whenever a change in the size of the pipe, or an angle of 20 degrees or greater in alignment occurs, the flowline of the pipe flowing into the manhole shall be a minimum of 0.15 feet above the flowline of the pipe flowing from the manhole, or an amount necessary to match the inside crowns of the pipes, whichever is greater.

E. ***Cast in Place Bases.*** Cast in place concrete manhole bases shall be constructed in accordance with Drawing S-1 and the following:

1. *Straight runs.* Where manholes are constructed on straight runs, the manholes may be constructed with the pipe laid through. The portion of the pipe within the manhole shall be cut out and removed once the manhole base is cured.

2. *Waterstops.* PVC adaptor rings (waterstops) shall be installed on all PVC pipe within manholes. If the pipe is laid through, these gaskets shall be protected until the manhole base is poured.

F. ***Precast Manhole Base.*** When approved by the District, a precast manhole base may be used for sewer manholes. Precast manhole bases shall be constructed in accordance with Drawing S-1(a).

G. ***Drop Manholes.*** The need for the construction of drop manholes should be avoided, whenever possible, by the adjustment of sewer pipe gradients during design. When avoidance is not possible, and when the vertical distance between the inverts or sewer lines coming into a manhole exceeds 30", a standard drop manhole shall be constructed in conformance with the Standard Drawings.

H. ***Connection to Existing Manholes.*** Connections to existing manholes shall be made by coring the manhole. The core shall be of the proper size to allow the use of a flexible pipe-to-manhole connector. The flexible connector shall be manufactured by Kor-N-Seal or approved equal. A flow channel shall be provided within the existing manhole and shall be shaped to provide a smooth flow condition.

The Contractor shall provide at least 24 hours notice to the District prior to any connection to existing manholes.

3.8 LAYING SEWER PIPE

A. ***Verification of Grades.*** Sewer pipe shall be constructed to the lines and grades shown on the approved plans. Each pipe length shall be checked to verify the grade line. In addition, a string line shall be used in the bottom of the trench to ensure proper alignment and grade. A laser may be used in lieu of a string line.

B. ***Handling.*** Sewer pipe shall be handled with care to avoid damage. The interior and machined ends of the pipe and fittings shall be kept free of dirt and foreign matter at all times. Pipe or fittings which have been damaged in such a way that they cannot be repaired to the District's satisfaction shall be replaced at the Contractor's expense.

C. ***Placement.*** Sewer pipe shall be laid continuously upgrade with the bell of the pipe forward (upstream). Each length of pipe shall be laid on a firm bed and shall have a true bearing for the entire length, except for coupling holes. Prior to lowering the pipe in the trench, coupling holes shall be dug of sufficient size to allow assembly and provide a 2 inch minimum clearance around the coupling.

D. ***Joining.*** Both bell and spigot shall be clean before the joint is made, and care shall be taken that nothing but the joint-making material enters the joints. Sewer pipe shall not be deflected either vertically or horizontally, more than the manufacturer's recommendation.

E. ***Temporary Plug.*** Whenever pipe laying is not in progress, the open ends of the pipe shall be closed by an appropriate means to prevent the entry of trench water or other foreign matter into the pipe.

F. ***Wet Conditions.*** Whenever water is present in the trench, enough backfill shall be placed over the pipe to prevent floating. Any pipe that has floated shall be removed and relaid as directed by the District. No pipe shall be laid in wet trench conditions that preclude proper bedding, or when in the opinion of the District, the trench conditions or the weather are unsuitable for proper installation.

3.9 DISCHARGE INTO SEWERS

Except for potable water used for testing or cleaning, nothing shall be discharged into the LOCSD sewer system until all of the requirements for new work have been met. Special care shall be taken to prevent entry of surface run-off into the sewer laterals, manholes, exposed ends of pipe, and any other potential point of entry.

A. ***Flushing Water Lines.*** At no time shall chlorinated water used for flushing newly constructed water mains be discharged into the LOCSD sewer system, unless Applicant or Contractor obtains written permission from the District.

3.10 TESTING OF SEWER MAINS

Prior to acceptance by the LOCSD, newly constructed sewer mains shall be tested for leakage by a low pressure air test, and deflection by a mandrel test. In addition, the sewer shall be inspected by video.

A. ***Leakage Testing.*** The leakage test shall be performed by the Contractor under the observation of a LOCSD inspector. The inspector shall be provided at least 24 hours notice prior to the test. The leakage test shall be performed by a low pressure air test as follows:

The Contractor shall furnish all labor, air test equipment, and all other materials for making the required air test at his own expense.

After the sewer lines have been properly backfilled to a depth where additional backfilling will not disturb the position of the pipe, all or any sections that the District may select may be tested. In no case shall the required minimum backfill be less than four feet above the top of the pipe before subjecting the line to the test.

Each section of sanitary sewer between two successive manholes shall be tested by plugging all pipe outlets with suitable test plugs. Air shall be slowly added until the internal pressure is raised to 4.0 pounds per square inch (psi).

The compressor used to add air to the pipe shall have a blow-off valve set at 5 psi to assure that at no time the internal pressure of the pipe is raised to no more than 5.0 pounds per square inch (psi).

The internal pressure of 4 psi shall be maintained for at least two minutes to allow the air temperature to stabilize after which the air supply shall be disconnected and

the pressure allowed to decrease to 3.5 psi. The time in minutes that is required for the internal air pressure to drop from 3.5 psi to 2.5 psi shall be measured and the results compared with the values tabulated on the following page.

SEWER PIPE PRESSURE TEST	
Pipe Diameter Inches	**Minimum time for pressure to drop from 3.5 psi to 2.5 psi, per 100 feet of pipe:**
4	0.3 minutes
6	0.7
8	1.2
8	1.5
12	1.8
15	2.1
18	2.4
21	3.0
24	3.6

If the pressure drop from 3.5 psig to 2.5 psig occurs in less time than the above tabulated or calculated values, the pipe shall be repaired and, if necessary, replaced and relaid at the Contractor's expense until the joints and pipe shall hold satisfactorily under this test.

B. ***Deflection Test.*** Mandrel test (deflection test) shall be performed by the Contractor in order to verify the roundness and proper installation of the pipeline.

1. *Mandrel type.* Mandrels shall be approved by the District prior to use and shall meet the following requirements:

   (a) When requested, the Contractor shall make the mandrels available to the District for verification of size and suitability.

   (b) Mandrels shall be sized to indicate a maximum allowable 7% deflection, and shall be the nine-fin type.

2. *Test procedure.* The deflection test shall consist of testing pipe for proper installation as follows:

After the pipeline has been installed and backfill materials have been compacted to their required standard densities, the mandrel shall be pulled by hand through the pipeline with a suitable rope or cable that is connected to an eyebolt at one end of the gage.

A similar rope or cable shall be attached to the eyebolt at the opposite end of the mandrel and tension shall be applied to it. This will insure that the mandrel maintains its correct position during testing and also to remove the mandrel if it should be come lodged in an excessively deflected pipeline. Winching or other means of forcing the mandrel through the pipeline are unacceptable.

C. ***Video Inspection.*** Prior to acceptance by the LOCSD, newly constructed sewer mains shall be video inspected. The video inspection shall be made on a new, high quality VHS format tape in color and have a continuous display of date, time, and footage. The video inspection tape shall also include an audio description of the main being inspected (i.e. street and reach), wyes, laterals, manholes, and any unusual features such as misaligned joints, breaks, infiltration, standing water and the like.

Video inspection shall be performed prior to acceptance, but after the main is completely installed, the trench is backfilled and compacted, and the main has been balled and flushed. Any section of main that is replaced or altered after the video inspection shall be re-inspected by video upon completion.

1. *Acceptance.* In general, sewer mains shall be constructed to a continuous grade, and the video shall indicate this by showing an absence of ponded water. In unusual circumstances, the District may accept a sewer main when the video indicates isolated instances of ponding up to 1/4 inch deep, extending for no more than 10 feet.

   In no case will a sewer main be accepted which ponds in excess of this amount, or which otherwise is constructed to a non-uniform grade, in the opinion of the District.

2. *Submittal.* Video inspection tapes along with a written log containing all of the features and distances shall be submitted to the LOCSD for review. The tape and written log shall become property of the LOCSD upon submittal.

CHAPTER 4
WATER IMPROVEMENTS

4.1 DESIGN STANDARDS

The distribution system, wherever possible, shall be laid out in a grid system with no dead ends. Where dead ends can not be avoided the dead end main shall be constructed with a fire hydrant assembly for sediment blow-off. With prior approval of the District, a standard blow-off assembly may be used in-lieu of a fire hydrant.

A. ***Design Flow***. The distribution system shall be designated to provide for the maximum required fire flow, concurrent with the maximum day demand. Fire flow shall be as shown in the LOCSD Water Master Plan, or as designated by the Fire Chief. Maximum day demand factors shall be as designated in the LOCSD Water Master Plan.

B. ***Design Pressure***. The distribution system shall be designed to provide the design flow, with a minimum pressure of 20 psi anywhere in the distribution system.

C. ***Design Velocity***. The system shall be designed, where possible, with a maximum velocity of 10 feet per second under maximum day demand plus fire demand conditions. Where the maximum velocity exceeds 10 fps, calculations shall be provided demonstrating that allowable pipe pressures will not be exceeded under surge conditions, assuming instantaneous flow stops.

D. ***Planned System***. Water Distribution System improvements shall be designed to allow the planned build-out of the area. Facilities shown on future improvements in the LOCSD Water Master Plan shall be considered as minimum size improvements for this purpose.

In general, the size of new water mains shall be 8-inch minimum unless otherwise approved by the District.

4.2 LOCATION AND ALIGNMENT

All water facilities designed for operation or maintenance by the LOCSD shall be constructed within a right-of-way dedicated for a public street or road, unless such location is deemed impractical by the District. Any water facilities not constructed in a public right-of-way shall be constructed within a recorded easement dedicated to the District. Easements shall be a minimum of 15 feet wide, and shall be in a form acceptable to the District.

A. *Access*. Access for maintenance shall be provided for all water facilities. At a minimum, this shall require an all-weather access road to each fire hydrant and valve. All weather access roads shall be within public rights of way or dedicated easements.

B. ***Curved Water Mains***. Water mains may be curved in accordance with the manufacturer's recommendations. When designing a curved water main, the Consultant shall include the manufacturer's name and recommended practice for curving the water main as a part of the construction documents.

C. ***Depth***. Except as noted on the improvement plans, water mains shall be set at a profile which provides at least three feet of cover over the top of the pipe and requires not more than five feet of trench excavation, as measured from finish grade.

D. ***Valving***. The distribution system shall be equipped with a sufficient number of valves so that no single shut down will result in a removal from service of a length of main greater than 500 feet in commercial or residential areas; 800 feet when the area is zoned for 1 acre or larger lots. Valves shall also be provided where required by the District for system isolation.

All water main intersections shall have a valve on each run.

E. ***Fire Hydrant Locations***. Where possible, fire hydrants shall be placed at street intersections at intervals not exceeding 300 feet in commercial or industrial areas and 400 feet in other areas. The location of the hydrants shall be approved by the Fire Chief. Fire hydrants shall also be located in accordance with Drawing W-2.

4.3 SEPARATION FROM SEWER

All new sewer main, force main, house service laterals and appurtenant items shall be installed in conformance with the State of California, Department of Health Services requirements for separation and special construction. Additionally, all new sewer installation shall conform to Standard Drawings.

A. ***Special Construction in Areas of Conflict Between Water and Sewer Lines***

1. *Notes and Definitions.*

(a) Health Agency - The Department of Health Services.
(b) Water Supplier - "Person operating a public water system" or "supplier of water" means any person who owns or operates a public water system.
(c) Low Head Water Main - Any water main which has a pressure of five psi or less at any time at any point in the main.
(d) Compression Joint - A push-on joint that seals by means of compression or a rubber ring or gasket between the pipe and a bell or coupling.

(e) Mechanical Joints - Bolted joints.

(f) Rated Working Water Pressure or Pressure Class - A pipe classification system based upon internal working pressure of the fluid in the pipe, type of pipe material, and the thickness of the pipe wall.

(g) Fused Joint - The jointing of sections of pipe using thermal or chemical bonding processes.

(h) Sleeve - A protective tube of steel with a wall thickness of not less than one-fourth-inch the pipe into which the pipe is inserted.

(i) Ground Water - Subsurface water found in the saturation zone.

(j) House Lateral - A sewer connecting the building drain and the main sewer line.

B. ***Basic Separation Standards.*** The "California Waterworks Standards" sets fourth the minimum separation requirements for water mains and sewer lines. These Standards, contained in Section 64630, Title 22, California Administrative Code, specify:

1. *Parallel Construction.* Parallel construction is the horizontal distance between pressure water and sewer lines, which shall be at least 10 feet.

2. *Perpendicular Construction (Crossing).* Pressure water mains shall be at least one foot above sanitary sewer lines where these lines must cross.

(a) Separation distances shall be measured from the nearest edges of the facilities.

(b) Common Trench: Water mains and sewer lines must not be installed in the same trench.

When water mains and sanitary sewers are not adequately separated, the potential for contamination of the water supply increases. Therefore, when adequate physical separation cannot be attained, an increase in the factor of safety should be provided by increasing the structural integrity of both the pipe materials and joints.

C. ***Exceptions to Basic Separation Standards.*** Local conditions, such as available space, limited slope, existing structures, etc., may create a situation where there is no alternative but to install water mains or sewer lines at a distance less than that required by the Basic Separation Standards. In such cases, alternative construction criteria as specified below should be followed, subject to the special provisions.

Installation of water mains and sewer lines 24 inches in diameter or larger should be reviewed and approved by the health agency prior to construction.

D. *Special Provisions.*

1. The Basic Separation Standards are applicable under normal conditions for sewerage collection lines and water distribution mains. More stringent requirements may be necessary if conditions, such as high groundwater, exist.

2. Sewer lines shall not be installed within 25 feet horizontally of a low head (5 psi or less) water main.

3. In the installation of water mains or sewer lines, measures should be taken to prevent or minimize disturbances of the existing line. Disturbance of the supporting base of this line could eventually result in failure of this existing pipeline.

4. Special consideration shall be given to the selection of pipe materials if corrosive conditions may be due to soil type and/or the nature of the fluid conveyed in the conduit, such as a septic sewage which produces corrosive hydrogen sulfide.

5. *Sewer Force Mains.*

   (a) Sewer force mains shall not be installed within ten feet (horizontally) of a water main.

   (b) When a sewer force main must cross a water line, the crossing should be as close as practical to the perpendicular. The sewer force main should be at least one foot below the water line.

   (c) When a new sewer force main crosses under an existing water main, all portions of the sewer force main within ten feet (horizontally) of the water main shall be enclosed in a continuous sleeve.

   (d) When a new water main crosses over an existing sewer force main, the water main shall be constructed of pipe materials with a minimum rated working pressure of 200 psi or equivalent pressure rating.

E. ***Alternate Criteria for Construction.*** The construction criteria for sewer lines or water mains where the Basic Separation Standards cannot be attained are shown in Drawings W-11 and W-12. There are two situations encountered:

Case 1--New sewer line--existing water main.
Case 2--New water main--existing sewer line.

For Case 1, the alternate construction criteria apply to the sewer line.
For Case 2, the alternate construction criteria apply to either or both the water main and sewer line.

The construction criteria also apply to the sewer laterals that cross above a pressure water main but not to those sewer laterals that cross below a pressure water main.

4.4 CROSS CONNECTIONS

Backflow prevention devices shall be installed on all service connections determined by the District to pose a potential threat to the health and safety of the LOCSD water system. At a minimum the following services connections shall require backflow prevention.

A. Landscape irrigation
B. Medical and health care facilities
C. Areas served by private wells
D. Restaurants and other food preparation facilities
E. Private fire protection lines
F. Laboratories
G. Commercial and Industrial facilities that use water for other than domestic purposes.

H. ***Backflow Device.*** The type of backflow device shall be in accordance with the California Department of Health Services regulations relating to cross-connections (California Administrative Code - Title 17 - Article 2,7604). The type of device and the method of installation shall also be subject to review and approval of the County Environmental Health Department.

I. ***Location of Backflow Devices.*** Backflow devices shall be constructed according to Drawings W-15 and W-16. Backflow devices shall be located as close as practical to the point of connection. In addition, backflow devices shall be located in accordance with Section 7603, Article 2 of the California Administrative Code, Title 17.

J. ***Ownership and Maintenance.*** Ownership and maintenance of backflow preventers shall remain with the property owner and not with the LOCSD.

4.5 WATER MAIN

All new buried water mains shall be Polyvinyl chloride (PVC) except that where required by the District, new water mains shall be ductile iron pipe (DIP). All above ground water mains shall be DIP. If requested by the District, the supplier shall furnish a certificate that all pipe, valves, fittings, protective coatings, and all other materials meet the requirements of these Standards. The minimum size of new water main shall be 8 inches in diameter, except that on a short (400 ft) dead end not serving a fire hydrant, the minimum shall be 6 inches.

A. ***PVC Water Main.*** PVC water pipes shall be a minimum of Class 150 and shall conform to AWWA C-900.

1. *Joints*. Wherever possible, PVC pipes shall have integral bell and spigots. All PVC waste pipe joints shall have elastomeric gaskets conforming to ASTM F477. Solvent cement joints shall not be used.

B. ***DIP Water Main.*** Buried DIP shall be mortar lined and shall conform to AWWA C-104, C-105, and C-151. Joints shall be approved mechanical joint.

Above ground DIP shall be Thickness Class 53 minimum, shall be mortar lined, shall have flanged joints, and shall conform to AWWA, C-104, and C-151. Above ground pipe and fittings shall be epoxy painted blue.

C. ***Fittings for Water Main.*** Bends, elbows, tees, crosses, and special fittings shall be cast iron conforming to AWWA C-110, C-153, or approved equal. Eccentric reducers shall be installed when required to minimize air pockets.

Cast iron fittings shall be cement mortar lined in accordance with AWWA C-104. Fittings lined in the field will not be considered as conforming to AWWA C-104, and will not be accepted.

The outside of cast iron fittings for general use shall have a bituminous coating of coal tar approximately 1 mil thick, unless otherwise specified. The finishing coat shall be continuous and smooth. It shall be neither brittle when cold nor sticky when exposed to the sun, and shall adhere strongly to the pipe.

D. ***Curved Water Mains.*** Water mains may be curved in accordance with the manufacturer's recommendations. When designing a curved waterline, the consultant shall include the manufacture's name and recommended practice for curving the water main as a part of the construction documents.

E. ***Tracer Wire.*** Ten (10) gage insulated copper tracer wire shall be laid in the trench above the pipe and branched to all water service laterals, fire hydrants, and air relief valves. The tracer wire shall be brought to finish grade through all meter boxes and valve access boxes. At fire hydrants, the tracer wire shall be brought to six inches above finish grade and secured to the hydrant bolt flange.

F. ***Thrust Blocks.*** Thrust blocks shall be constructed at all pipe bends greater than 5 degrees, at tees, at valves, at dead ends, and at other locations where there is the potential for thrust. Thrust block sizing shall conform to Standard Drawing W-4. Concrete for thrust blocks shall conform to State Standard Class B (5-sack) minimum.
With prior approval of the District, alternate thrust restraints may be provided.
Before any thrust block is poured against a waterline or fitting, the fitting shall be

wrapped in polyethylene plastic sheets. No concrete shall be poured against bare pipe

or fittings.

4.6 TRENCHING AND BACKFILL

A. ***Safety***. All trenching and backfill shall comply with Section 1.5 regarding safety precautions.

B. ***Trench Excavation***. Unless otherwise specified, the excavation for water pipe shall be an open trench, excavated to 6 inches below the bottom of the pipe. This undercutting shall be refilled with suitable bedding material as described in these Specifications.

C. ***Existing Paving***. When the trench is in an existing paved area, the pavement shall be sawcut and removed ahead of the trenching operations. Grinding will be considered an acceptable alternative method or removal provided that the a clean pavement edge shall be provided. The proper tools and equipment shall be used in marking and breaking so that the pavement will be cut accurately on neat and parallel lines 12 inches wider on each side than the trench width.

When, in the opinion of the District, the remaining paving has been damaged, additional pavement shall be cut from each side to the approval of the District.

D. ***Unsuitable Material***. Whenever the bottom of the trench is soft, yielding, or unsuitable as a foundation for the pipe, the unsuitable material shall be removed to a depth determined by the District, and replaced with compacted bedding material. It is the intention of these specifications, that a firm uniform bedding be provided for the pipe.

E. ***Dewatering***. When groundwater is encountered, the trench shall be kept dewatered until the laying and jointing of the pipe, and placing of the bedding material has been completed, inspected, and approved. The water shall be disposed of in such a manner that it will not cause any damage to public or private property, and that it will not be a menace or inconvenience to the public.

F. ***Bedding***. Bedding material, approved by the District and meeting the minimum standards listed below, shall be deposited and compacted to 90% relative compaction in the trench. The compacted bedding material shall extend to a minimum of 6 inches below and to the sides of the pipe, and 12 inches above the top of the pipe.

Bedding material shall be non plastic sand meeting the following specifications:

TRENCH BEDDING MATERIAL	
Sieve Size	Percentage Passing Sieve
1/2 inch	100
No. 4	80 - 100
No. 200	0 - 15
Sand Equivalent	20

G. ***Subsequent Backfill.*** All trenches shall be backfilled to the full width of the trench, after pipe, fittings, appurtenances and bedding material have been installed, and before the required pressure and leakage tests are performed. The backfill under and around any and all pipes shall be thoroughly consolidated in maximum 8" lifts or by other methods approved by the District Engineer before any additional material is placed.

Subject to the provisions herein, native material or material from the project excavations may be used as backfill, provided that all organic material, rubbish, debris, and other objectionable materials are first removed. Broken concrete and pavement from the project excavations will be subject to the same limitations as rocks.

Rocks larger than 6 inches in any dimension will not be permitted in backfill placed between 1 foot above the top of the pipe and 12 inches below pavement subgrade. Where rocks are included in the backfill, they shall be mixed with suitable excavated materials so as to eliminate voids.

H. ***Compaction.*** Compaction shall be as shown on the plans and Standard drawings. Compaction methods must be carried out so no damage or displacement of the pipe results.

Any trenches improperly backfilled, or where settlement occurs, shall be reopened to the depth required for proper compaction, then refilled and compacted, with the surface restored to the required grade and compacted and smoothed off.

I. ***Pavement Replacement.*** Replacement of roadway paving shall be in conformance with these specifications. However, for County roadways, the pavement replacement must meet County requirements.

Paving replacement shall not proceed until all the backfilling and compaction requirements have been met.

The replacement of roadway structural section over all cuts in existing bituminous pavement shall be 6 inches minimum of Class 2 aggregate base and .2 foot minimum of Type B asphalt concrete. In no case shall the structural section be less than the existing adjacent pavement section.

1. *Temporary Surfacing*. Until the permanent pavement is placed, the material at the surface of the trench shall be maintained at all times at a grade level with the street, suitable for the safe passage of traffic. This may be accomplished by steel traffic plates or by temporary backfill. Traffic plates shall be non-skid in accordance with Caltrans standards.

   In any case where a trench is cut across a main thoroughfare, or if noted on the drawings, a temporary asphalt plant-mix-cutback surface shall be placed immediately after the backfill has been completed and removed just prior to placing the permanent surfacing material.

   When ready for resurfacing, the upper portion of the trench shall be excavated to a depth sufficient for installation of the required structural section.

2. Aggregate base shall be placed, compacted and graded. Edges of the existing asphalt concrete shall be trimmed to provide a neat and straight vertical joint. The joint face shall then be cleaned and tacked with asphaltic emulsion. Type B asphalt concrete shall be placed in accordance with Section 39 of the State Standard Specifications.

J. ***Asphaltic Emulsion (Paint Binder)***. Asphaltic emulsion shall be applied to the pavement edges, free of loose material, in accordance with the provisions of Section 94 of the State Standard Specifications.

   Asphaltic emulsion shall be Type SS-1h and shall be applied as directed by the District.

K. ***Asphaltic Concrete***. Asphaltic concrete shall be Type B and shall conform to the provisions in Section 39 of the State Standard Specifications, and the following:

1. The amount of asphalt binder to be mixed with the aggregate shall be between 6.1 percent and 6.2 percent by weight of the dry aggregate as determined by the District.

2. Spreading and compacting shall be performed by methods in conformance of Section 39 that will produce surfaces of uniform smoothness, texture, and density.

L. ***Restoration***. All restoration and cleanup work shall follow closely the completed trench paving operation.

M. Trenching and repair work within County Roads may require an "Encroachment Permit" and adhering to those requirements.

4.7 LAYING WATER PIPE

A. ***Lines and Grades***. Water pipe shall be laid to the lines and grades shown on the approved plans.

B. ***Handling***. Water pipe shall be handled with care to avoid damage. The interior and machined ends of the pipe and fittings shall be kept free of dirt and foreign matter at all times. Pipe or fittings which have been damaged in such a way that they cannot be repaired to the District's satisfaction shall be replaced at the Contractor's expense.

C. ***Placement***. Each length of pipe shall be laid on a firm bed and shall have a true bearing for the entire length, except for coupling holes. Prior to lowering the pipe in the trench, coupling holes shall be dug of sufficient size to allow assembly and provide a 2 inch minimum clearance around the coupling.

D. ***Joining***. Both bell and spigot shall be clean before the joint is made, and care shall be taken that nothing but the joint-making material enters the joints. Water pipes shall not be deflected either vertically or horizontally, more than the manufacturer's recommendation.

E. ***Temporary Plug***. Whenever pipe laying is not in progress, the open ends of the pipe shall be closed by an appropriate means to prevent the entry of trench water or other foreign matter into the pipe.

F. ***Wet Conditions***. Whenever water is present in the trench, enough backfill shall be placed over the pipe to prevent floating. Any pipe that has floated shall be removed and relaid as directed by the District. No pipe shall be laid in wet trench conditions that preclude proper bedding, or when in the opinion of the District, the trench conditions or the weather are unsuitable for proper installation.

4.8 VALVES

All water valves shall be epoxy lined, resilient seated gate valves conforming to AWWA C-509 and these specifications. Valves 6 inch through 12 inches shall be Mueller, Clow, AVK, or approved equal. Valves larger than 12-inch shall be butterfly valves as approved by the LOCSD. Valve installations shall conform to Standard Drawing W-3.

4.9 FIRE HYDRANT ASSEMBLIES

Residential fire hydrants shall be James Jones J-3701 and fire hydrants serving commercial occupancies shall be James Jones J-3775. All fire hydrants shall have tamper proof tops. The main body shall be painted yellow. Fire hydrant installations shall conform to Standard Drawing W-1 and W-2.

4.10 BLOW-OFFS

Water line blow-offs shall be installed at all dead ends, at low points, or other places where sediments may collect. Where possible, fire hydrants shall be used as blow-offs. Blow-off assembly installations shall conform to Standard Drawing W-9.

4.11 AIR AND VACUUM RELEASE VALVES

Air and vacuum release valves (air/vacs) shall be installed at high points and where air pockets may form. Air/vac installations shall conform to Standard Drawing W-13.

4.12 WATER SERVICES

Separate water service meters shall be provided for each parcel of land. Homes (including secondary homes) or building under separate ownership or occupied by separate tenants shall also be provided with separate service connections. Exception: Guest houses (as defined by the County Building Code) shall not be required to have a separate service lateral.

Water service connections shall conform to Standard Drawing W-5 and W-6.

A. ***Size of Meter and Service.*** The size of the water meter shall conform to the District's policies.

B. ***Connection to Existing Main (Tie-in).*** The LOCSD and effected customer shall be given at least 24 hours written notice prior to any prepared shut down. The LOCSD will perform all water main shutdowns. Existing mains shall not be shutdown after 10 am for the purpose of tie-ins. Prior to any shutdown for a tie-in, the following must be performed:

1. All encroachment permits and rights-of-entry must be obtained;
2. 24-hour notice shall be given to The LOCSD and the affected customers;
3. All necessary materials must be on-site and fully assembled;
4. The point of tie-in shall be fully exposed.

C. ***New Water Main.*** When a new water main is being installed, all new water services shall be installed at the same time.

4.13 TESTING

All new water system installations shall be tested for leakage and disinfection. The Contractor shall provide at least 24 hours notice to The LOCSD prior to performing any tests.

A. *Pressure (Leakage) Test.* The Contractor shall perform a pressure test, which shall be observed by the District. The test shall be performed as follows:

1. A pressure test will only be made after all backfilling is completed, and not before all concrete thrust blocks have reached full strength.

2. The test pressure will be equal to the pressure class of the pipe. The duration of the test will be 2 hours unless specified otherwise by the District.

3. The water system shall first be slowly filled with water and all air expelled. All valves controlling the section shall be closed and allowed to set for at least 24 hours.

4. The pipe shall be raised to test pressure by a method acceptable to the District. All pressure gages shall be approved by the District.

5. During the test, all air shall be expelled from the piping. If necessary, a service saddle and corporation stop shall be installed to permit air to escape. After the testing is completed this corporation stop shall be capped and backfilled. The Contractor shall also install all such valves as necessary for isolating the test section.

6. Any cracked or defective pipe, fittings, valves or hydrants discovered during the test shall be removed and replaced with sound material and the test repeated until the system is proved satisfactory.

7. The allowable leakage in the test section shall not exceed the rates shown below:

WATER SYSTEM LEAKAGE TEST		
Allowable leakage (gph) per 1000 feet of pipe or 50 joints:		
Pipe Size	150 psi	200 psi
4"	0.33	0.41
6"	0.50	0.61
8"	0.66	0.81
10"	0.83	1.02
12"	0.99	1.22

8. After completion of the pressure testing, the mains, hydrants, blow-offs, and service connections shall be flushed until the water is free of all pipe lubricant, foreign material, and excess chlorine.

B. ***Disinfection***. New water mains shall be disinfected in accordance with AWWA C-601 using the HTH tablet (calcium hypochlorite) method; except that the initial dosage shall be 50 mg/L with a residual of at least 10 mg/L after a 24-hour period. Disinfection of the main shall be performed in conjunction with the pressure testing.

Following successful pressure testing and disinfection, bacteriological testing and standard plate counts shall be performed by the LOCSD personnel. Bac-T must be absent and Heterotrophic Plate Count (HPC) must be less than 10. Costs incurred by the LOCSD for this testing shall be reimbursed by the Applicant prior to final acceptance.

The new mains shall remain shut-off and isolated from the existing system until cleared by the LOCSD. A tie-in to the the LOCSD system does not constitute acceptance of the mains by the LOCSD.

C. ***Discharge into Sewers***. At no time shall the water used for flushing newly constructed water mains be discharged into the the LOCSD sewer system, unless Applicant or Contractor obtains written approval from the District.

Revisions	Appd.	Date

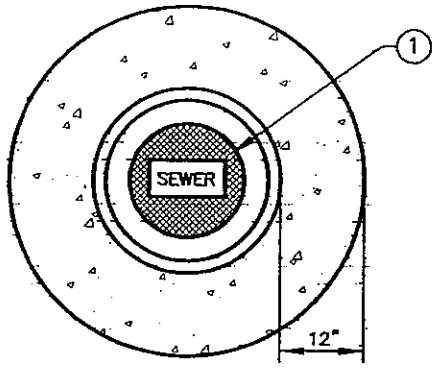

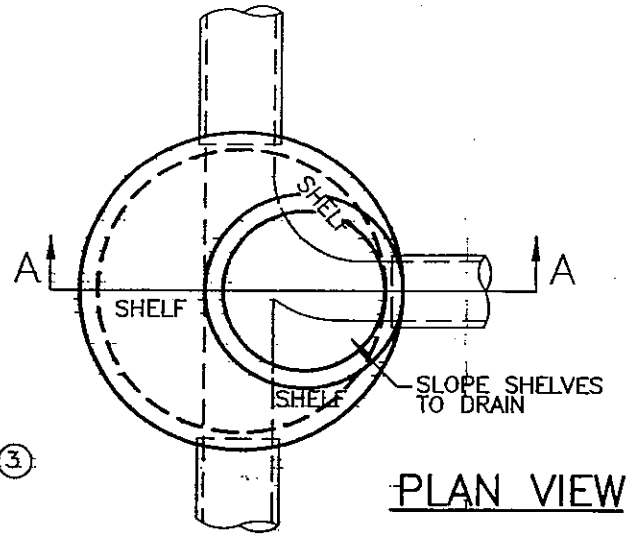

PLAN VIEW

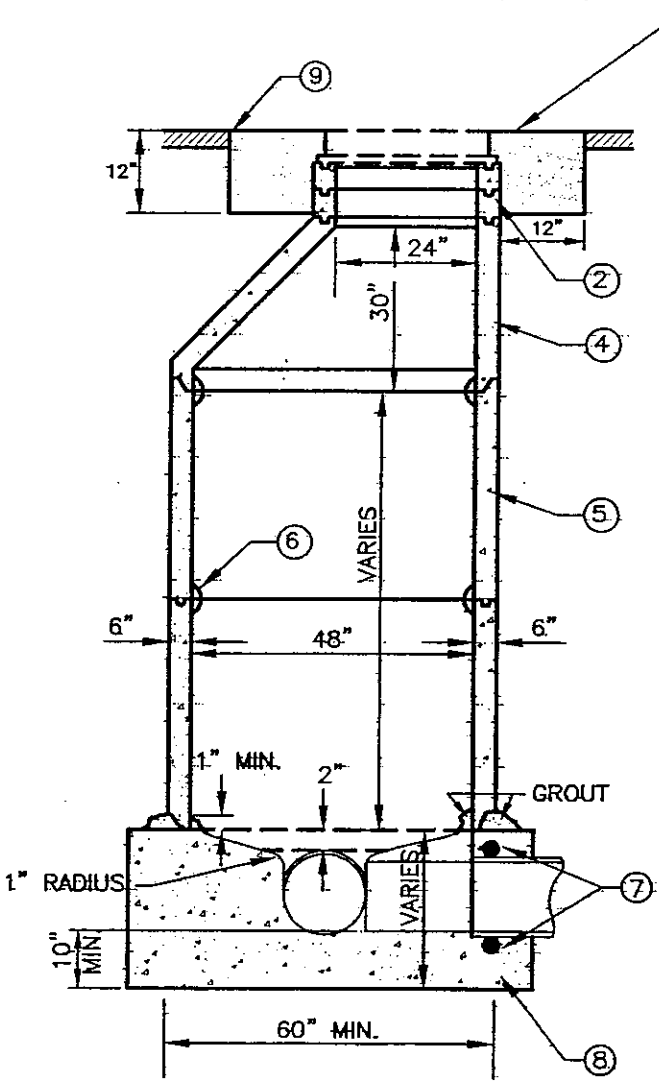

SECTION A–A

① COVER, Manhole frames and cover shall have a 24" clear opening and a sealed blind pickhole (Pinkerton A–640 or approved equal). The cover shall be lettered "SEWER". Cover to be rattle–free without the use of sealant.

② ADJUSTMENTS, Rings shall be 3" or 6". Top of cone to top of frame shall not exceed 15". Grade rings and manhole frame shall be sealed at every joint with butyl rubber (CONSEAL CS–102 or equal) and grouted on the inside.

③ CONCRETE COLLAR, Collar shall be Class A concrete. Trowelled to street grade. The collar shall be allowed to cure 48 hours prior to any traffic use.

④ CONE, Cone shall be eccentric and conform to the requirements for risers. The straight side of the cone shall be positioned over the manhole outlet. Concentric cones may be used only in special cases with the prior written consent of the Engineer.

⑤ MANHOLE RISERS, Manhole risers shall be 48" in diameter, precast concrete conforming to ASTM C478–94 for Precast Reinforced Manhole Sections.

⑥ JOINTS, Joints shall be set with butyl rubber sealant (CONSEAL CS–102). Inside of joints shall be grouted with non–shrink grout.

⑦ WATER STOPS, when PVC used, i.e. Adapter Rings.

⑧ BASE, Manhole base shall be 10" deep minimum. Class "B" concrete shall be used and shall not fall over 6 feet unless on "elephants trunk" or an "adjustable pipe" is used. Concrete work in channel shall be a steel trowel finish and shelf areas shall be a broom finish. Base shall be monolithically placed.

LOS OSOS COMMUNITY SERVICES DISTRICT

APPROVED BY THE DISTRICT ENGINEER DATE

LOS OSOS COMMUNITY SERVICES DISTRICT
STANDARD DRAWING

STANDARD SEWER MANHOLE

S–1

NO SCALE

Revisions	Appd.	Date

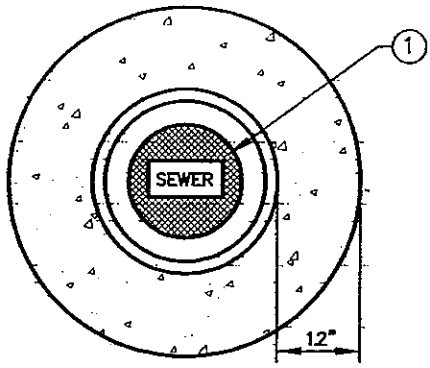

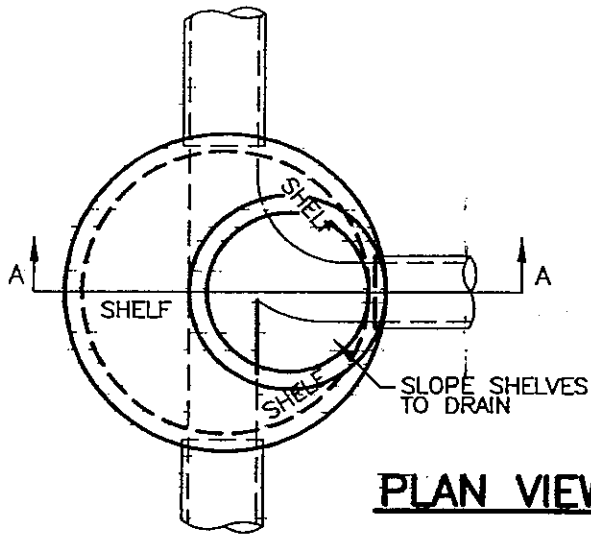

PLAN VIEW

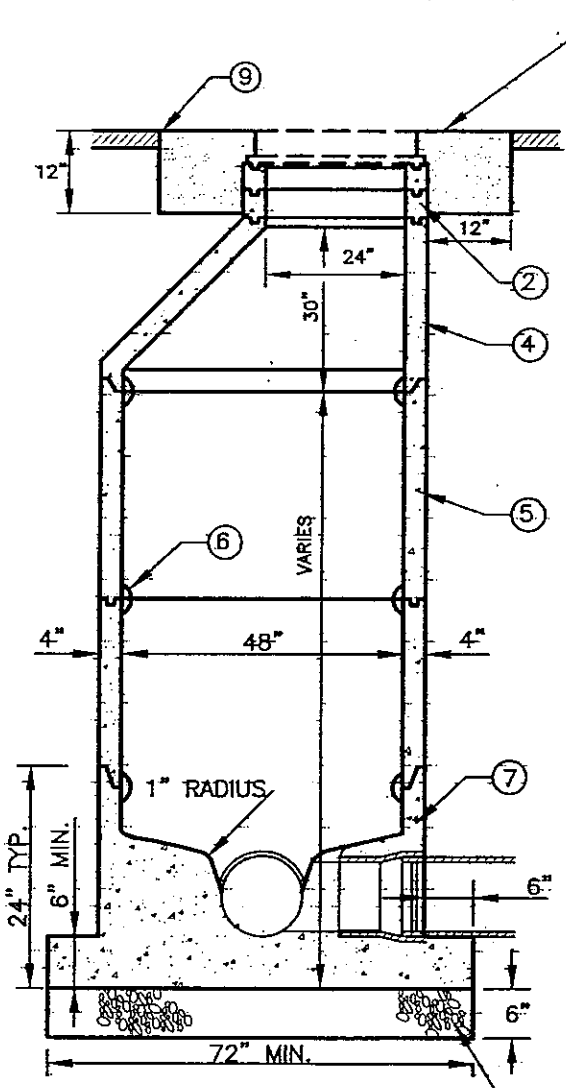

SECTION A–A

1. COVER, Manhole frames and cover shall have a 24" clear opening and a sealed blind pickhole. The cover shall be lettered "SEWER". Cover to be rattle free without the use of sealant.

2. ADJUSTMENTS, Rings shall be 3" or 6". Top of cone to top of frame shall not exceed 18". Grade rings and manhole frame shall be sealed at every joint with Class 'B' mortar and grouted inside.

3. CONCRETE COLLAR, Collar shall be Class A concrete. Trowelled to street grade. The collar shall be allowed to cure 48 hours prior to any traffic use.

4. CONE, Cone shall be eccentric and conform to the requirements for risers. The straight side of the cone shall be positioned over the manhole outlet. Concentric cones may be used only in special cases with the prior written consent of the Engineer.

5. MANHOLE RISERS, Manhole risers shall be 48" in diameter, precast concrete conforming to ASTM C478–94 for Precast Reinforced Concrete Manhole Sections.

6. JOINTS, Joints shall be set in Class 'B' mortar. Inside of joints shall be grouted with non–shrink grout.

7. BASE, Manhole base shall be precast reinforced Class B Concrete with extended base. All pipe connections shall be cored to fit flexible connectors (KOR–N–SEAL or equal) either by the manufacturer or contractor using approved equipment.

8. AGGREGATE BASE, The precast manhole base shall be placed on a minimum of 6" clean sand or gravel over native material that is either undisturb or compacteded to 95%.

9. LIP= 1/4" for New Pavement
   LIP= 0" for Existing Streets

APPROVED BY THE DISTRICT ENGINEER DATE

LOS OSOS COMMUNITY SERVICES DISTRICT
STANDARD DRAWING

PRE–CAST BASE
SEWER MANHOLE

S–1a

NO SCALE

Revisions	Appd.	Date

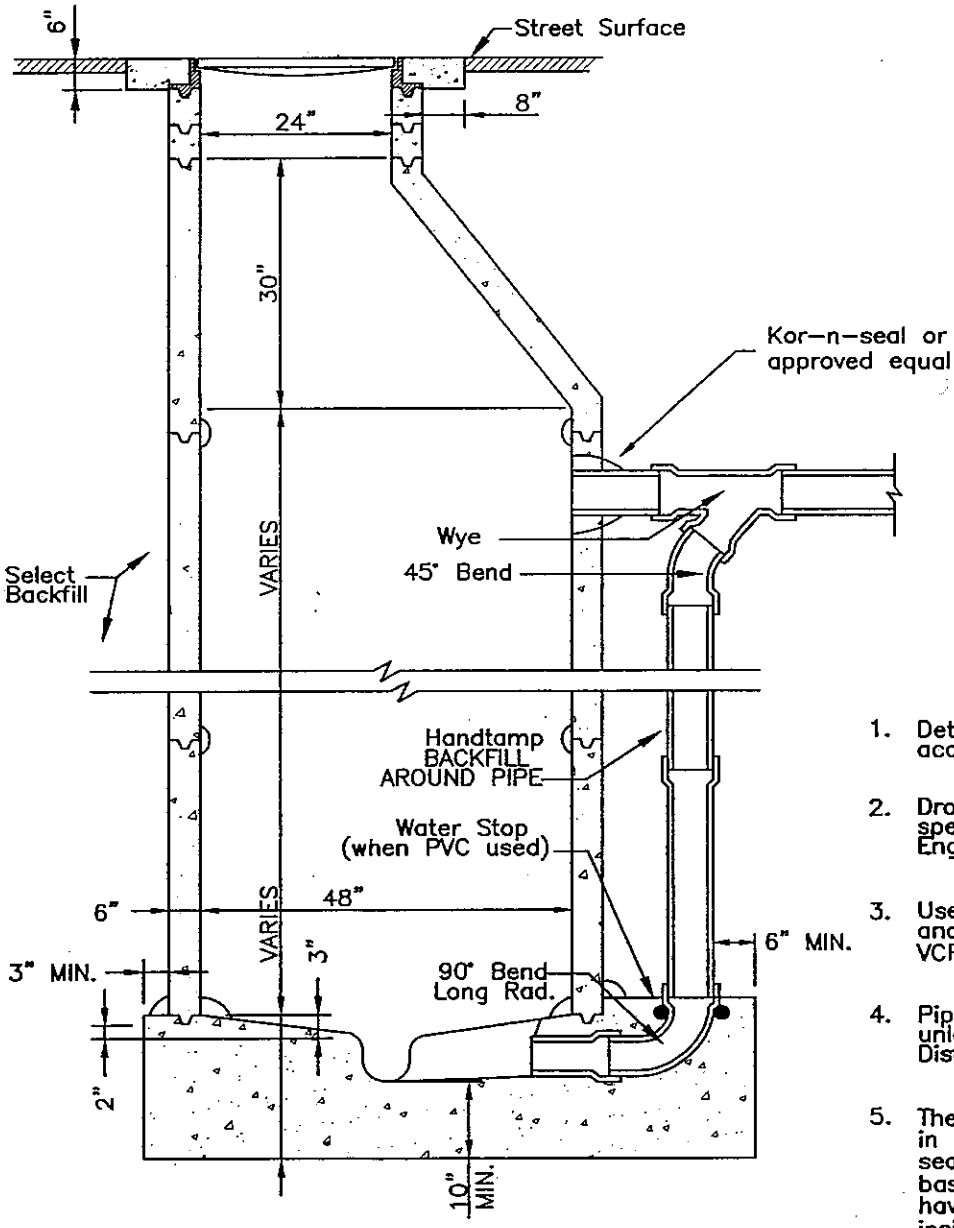

1. Details not shown shall be in accordance with LOCSD Drawing S–1.
2. Drop manholes may only be used with special permission from the District Engineer.
3. Use 2–12" pipe lengths at each inlet and outlet when connecting to existing VCP or ACP.
4. Pipe and fittings shall be PVC SDR 35 unless otherwise approved by the District Engineer.
5. The bottom precast riser shall be set in a formed groove using butyl rubber sealent–(CONSEAL CS–102). Manhole base shall be Class B concrete and have a steel trowel finish on the inside.

APPROVED BY THE DISTRICT ENGINEER DATE

LOS OSOS COMMUNITY SERVICES DISTRICT
STANDARD DRAWING

SEWER DROP MANHOLE

S–2

NO SCALE

Revisions	Appd.	Date

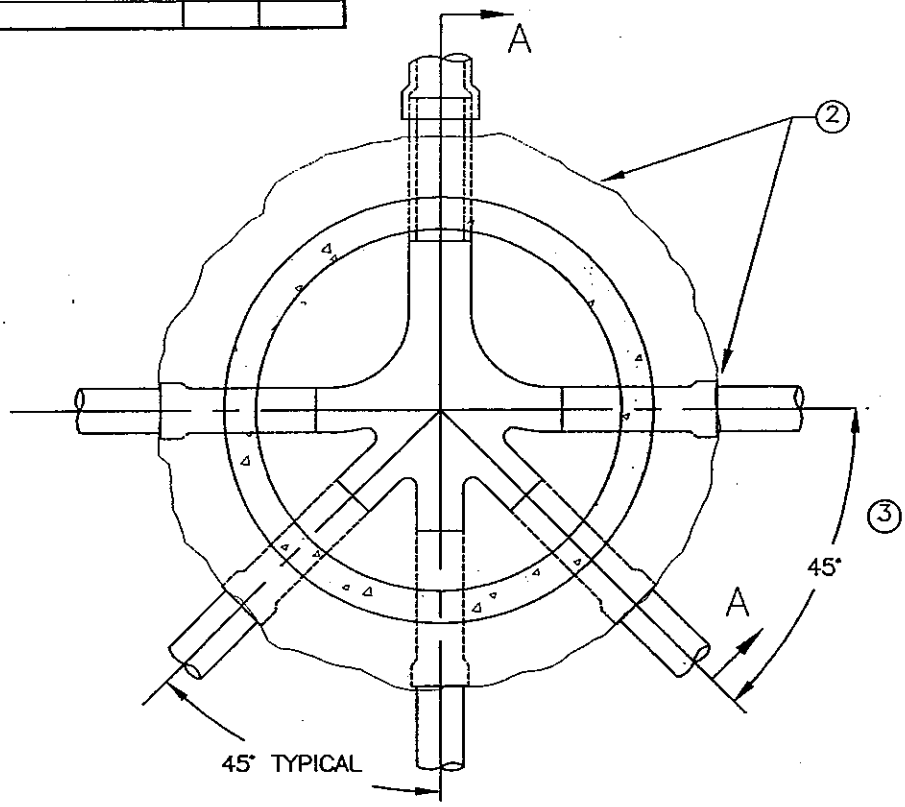

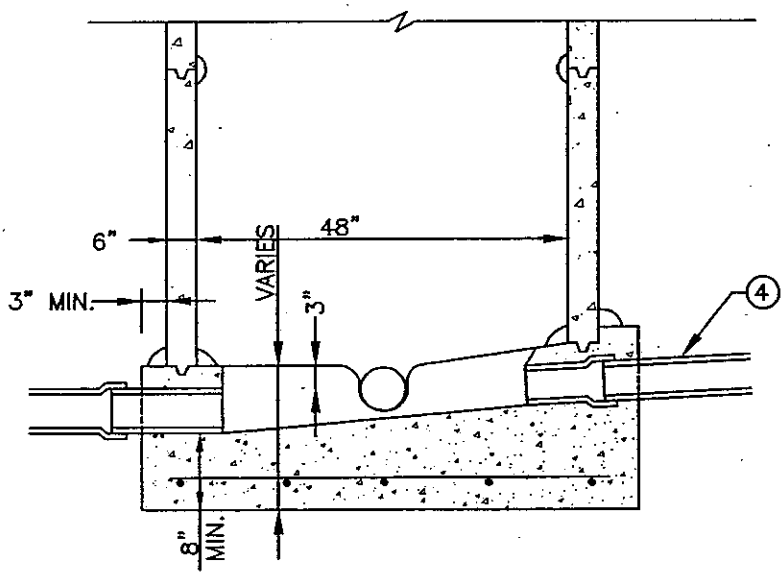

1. For details not shown on this drawing — see drawing S–1 or S–1A.
2. No connections are allowed in the downstream half of the manhole.
3. A maximum of 5 side sewer connections may be made to the manhole.
4. Side sewers shall be raised to match the soffit of the outlet pipe, or to provide 2" of the slope in the manhole, whichever is higher.

APPROVED BY THE DISTRICT ENGINEER DATE

LOS OSOS COMMUNITY SERVICES DISTRICT
STANDARD DRAWING

CUL–DE–SAC SEWER MANHOLE

S–3

NO SCALE

Revisions	Appd.	Date

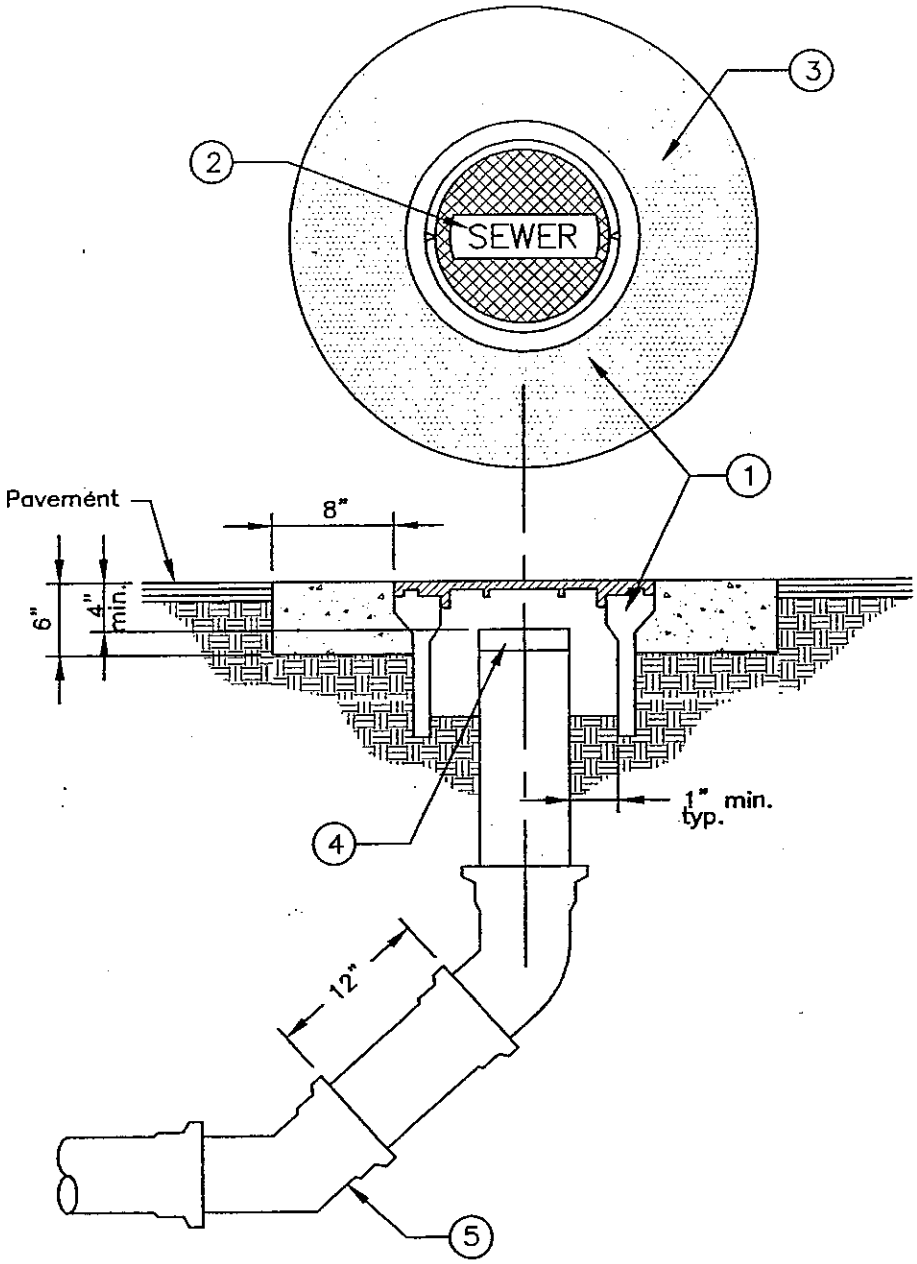

1. Traffic Valve Well and Cover: Christy G–5 for 4" Pipe.
   Christy G–12 for Larger diameter.
2. Traffic Lid marked "SEWER".
3. Class A concrete collar, trowelled to street grade. Allow to cure 48 hours prior to traffic use.
4. Removable Cap or Plug.
5. 2 – 45° Bends spaced 12 inches apart.

APPROVED BY THE DISTRICT ENGINEER DATE

LOS OSOS COMMUNITY SERVICES DISTRICT
STANDARD DRAWING

SEWER CLEANOUT

S–4

NO SCALE

Revisions	Appd.	Date

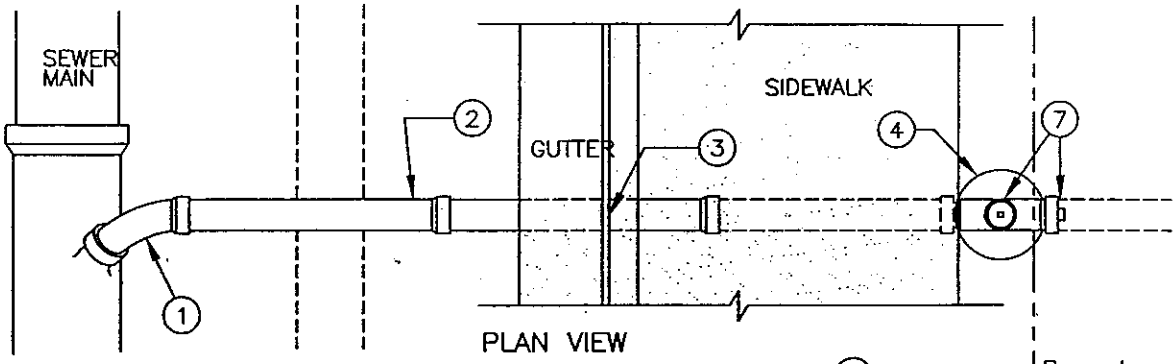

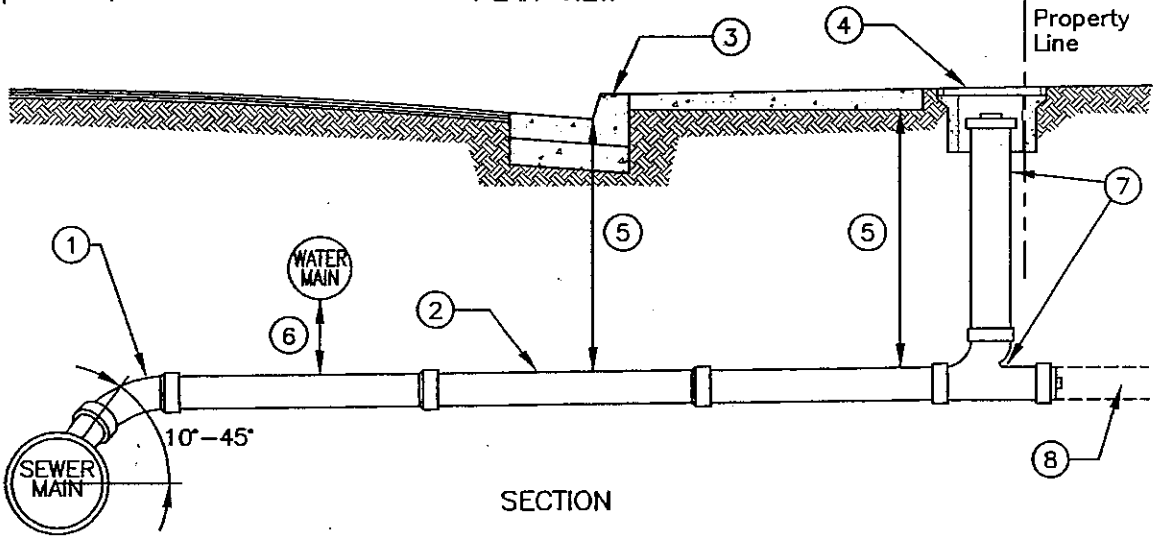

1. Factory–fabricated wye connection to new sewer mains (saddle and tapped connection to existing sewer mains), with 1/8 bend. Bend shall point downstream and enter main at a vertical angle.
2. Sewer lateral pipe and fittings shall be SDR 35 PVC with a minimum diameter of 4", and a minimum slope of 1/4" per foot. Lateral installation shall begin at main and proceed to cleanout. Grade shall be uniform from main to property line. Changes in grade of lateral shall be made using long–radius bends. Cement or hot–pour joints will not be permitted.
3. Top of curb shall be marked with an "S" directly over lateral. The "S" shall be stamped in new concrete or chiseled into existing concrete, and shall not be less than 3" long, 2" wide and 3/16" deep.
4. Christy G–5 (cast iron lid marked "sewer"), with no concrete collar.
5. Depth of lateral shall not be less than 36" from top of pipe unless encased in concrete or iron pipe. Maximum depth at gutterline shall be 60" when terrain is flat.
6. A minimum separation of 12" shall be maintained when crossing water lines.
7. Cleanout shall consist of cleanout tee, riser, and plug. Tee or riser shall be plugged during construction and left plugged when backfilled, if not tied to user (3" – 6" clearance from Christy box lid to plug).
8. Sewer lateral on private property with cleanouts spaced at 100 foot maximum intervals and where laterals change direction.

LOS OSOS COMMUNITY SERVICES DISTRICT

APPROVED BY THE DISTRICT ENGINEER DATE

LOS OSOS COMMUNITY SERVICES DISTRICT
STANDARD DRAWING

SEWER LATERAL

S–5

NO SCALE

Revisions	Appd.	Date
1. Revised On 11/29/01		
2. Revised On 12/14/01		
3. Revised On 01/09/02		

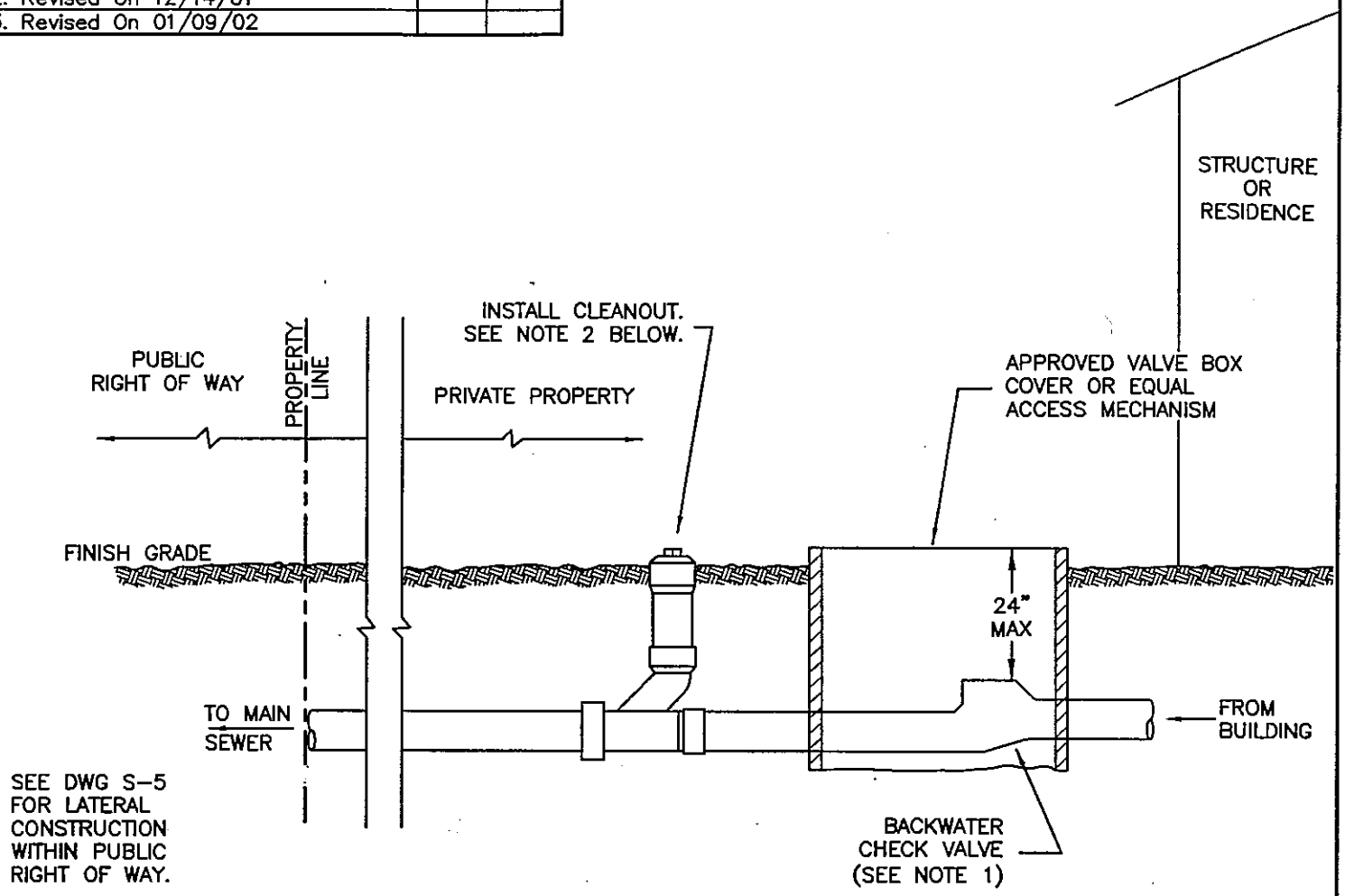

BACKWATER CHECK VALVE

(1) A backwater check valve device shall be installed on all sewer laterals connected to the LOCSD sewer collection system. In order to minimize valve depth and facilitate mointenonce, the valve shall be located as close to the structure as practical.

(2) Cleanout installation in paved or cancrete oreas, both in public rights-of-way and private property, shall follow DWG. S-4. Where cleanouts are not installed in an access box, the top of the cleanout shall protrude a minimum of 3" above finished grade.

(3) Recommended annual maintenance for the sewer backwater valve:

1. Remove spin-off cover.
2. Inspect flapper disc rubber for tears or deterioration. Gasket should be complete. If torn or worn out, replace with new gasket.
3. Rinse inside of valve thoroughly for inspection.
4. Check hinge-disc assembly for wear or tightness.
5. Visually check flapper disc olignment. It shauld make full contact upon closure. If all is well, replace cover.

APPROVED BY THE DISTRICT ENGINEER DATE

LOS OSOS COMMUNITY SERVICES DISTRICT
STANDARD DRAWING

SEWAGE BACKWATER
CHECK VALVE

S-6

NO SCALE

Revisions	Appd.	Date

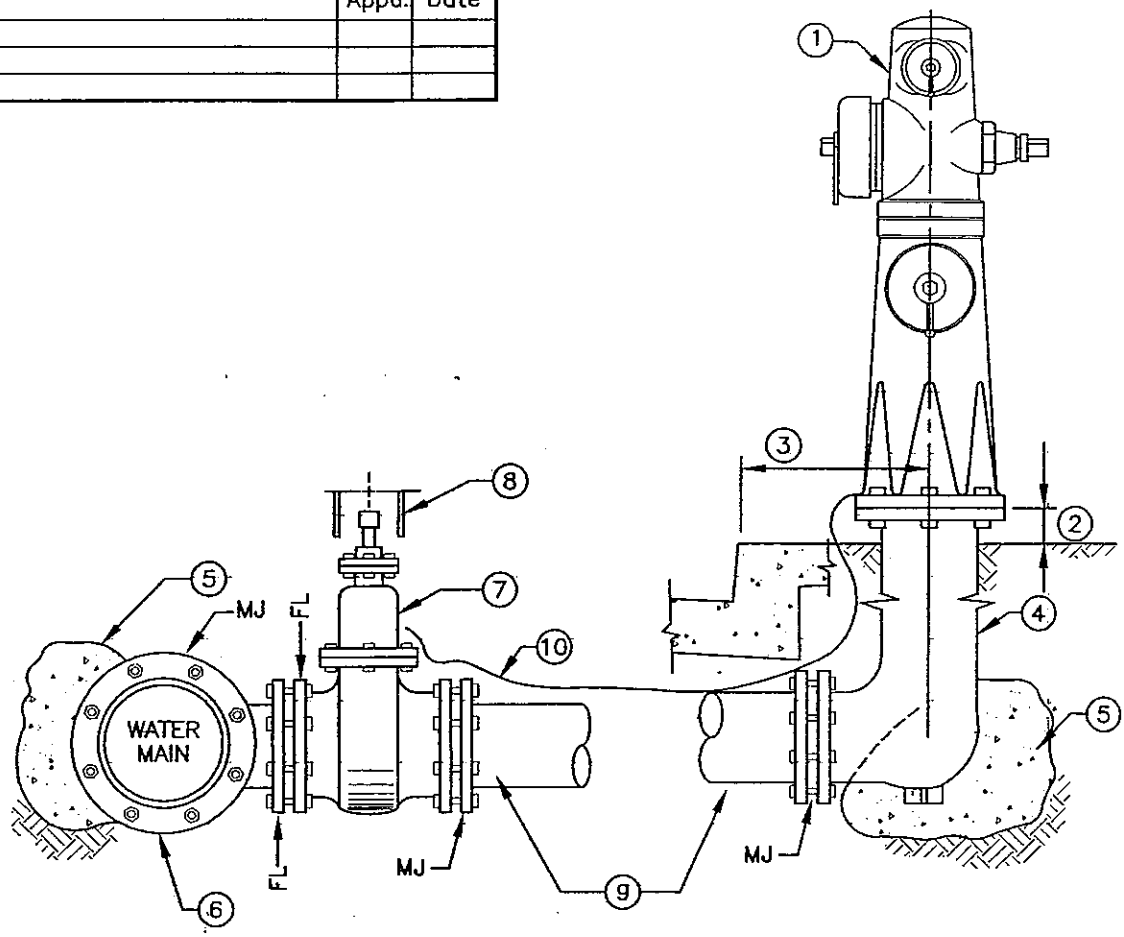

1. Fire Hydrant:
   James Jones J–3701 or approved equal (Residential Areas)
   1–4 inch outlet, National Standard Pumper Thread.
   1–2 1/2 inch outlets, National Standard Pumper Thread.
   James Jones J–3775 or approved equal (Commercial Areas)
   2–4 inch outlet, National Standard Pumper Thread.
   1–2 1/2 inch outlets, National Standard Pumper Thread.
   The fire hydrnats shall have the following:
   6 hole bose flange, rotate the hydrant so the 4 inch outlet is pointed toward the street.
   Caps with 1 5/8" pentagon nuts.
2. Install hydrant to provide 3 to 4 inches clearance under the flange. Use 5/8"x3" breakaway bolts with bolt heads on bottom and fill with silicone.
3. The hydrant shall be located per Drawing W–2
4. Standard Hydrant Bury.
5. Thrust Block Per Drawing W–4, shield concrete from flanges and boltsi
6. Mechanical Joint X Flanged Tee.
7. Valve per Drawing W–3.
8. Valve box per Drawing W–3.
9. Minimum 6" diameter PVC or DIP hydrant lateral with mechanical joint at each end.
10. 10 Gage tracer wire.

APPROVED BY THE DISTRICT ENGINEER DATE

LOS OSOS COMMUNITY SERVICES DISTRICT
STANDARD DRAWING

FIRE HYDRANT ASSEMBLY

W–1

NO SCALE

Revisions	Appd.	Date

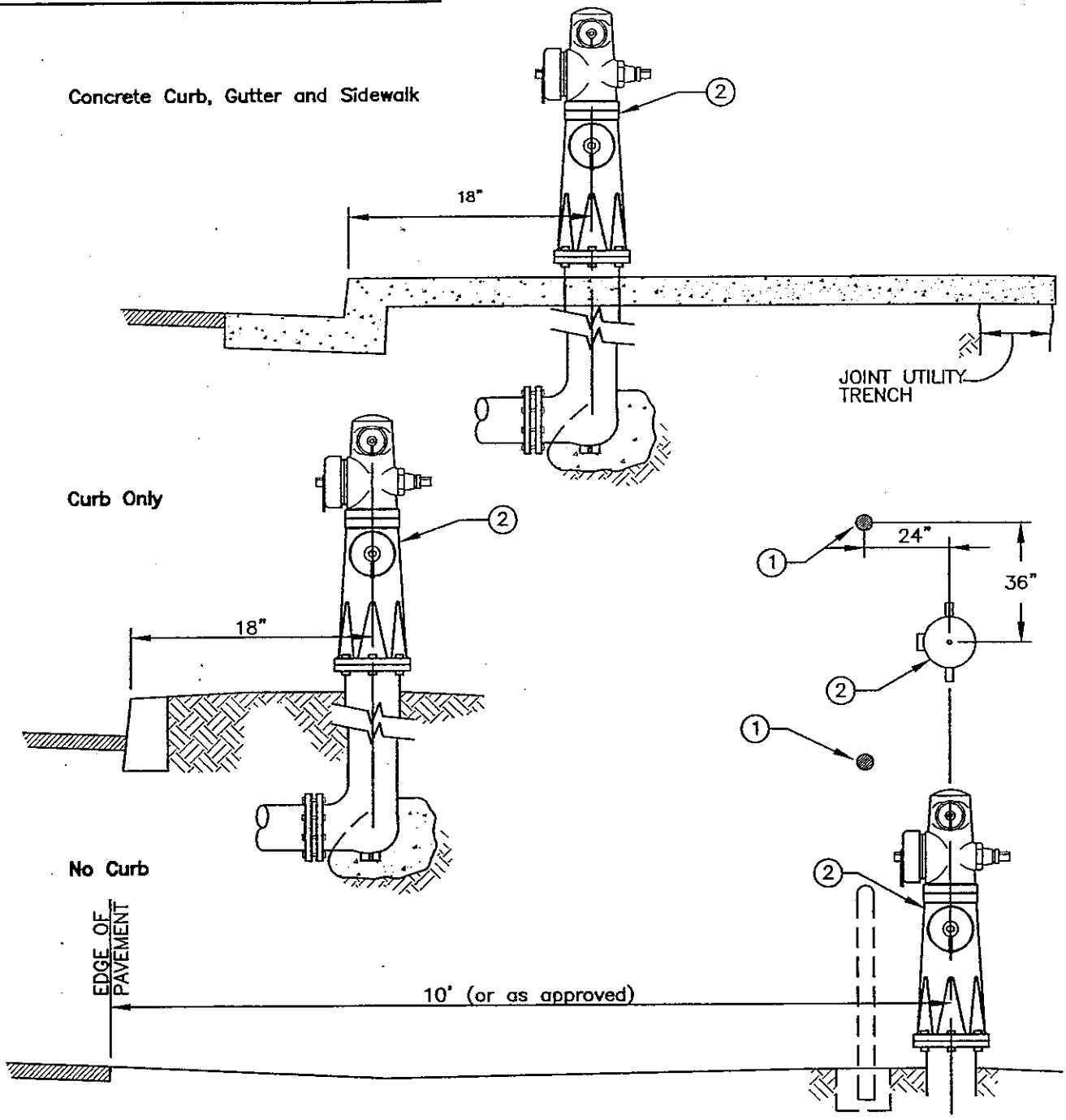

(1) 6" steel Bollard filled with concrete and painted yellow. Extend 36" above ground, set in 24" deep, 18" diameter concrete footing.

(2) Fire hydrant assembly per W-1 shall be placed within a dedicated public right-of-way or approved easement.

LOS OSOS COMMUNITY SERVICES DISTRICT

APPROVED BY THE DISTRICT ENGINEER DATE

LOS OSOS COMMUNITY SERVICES DISTRICT
STANDARD DRAWING

FIRE HYDRANT LOCATION

W-2

NO SCALE

Revisions	Appd.	Date

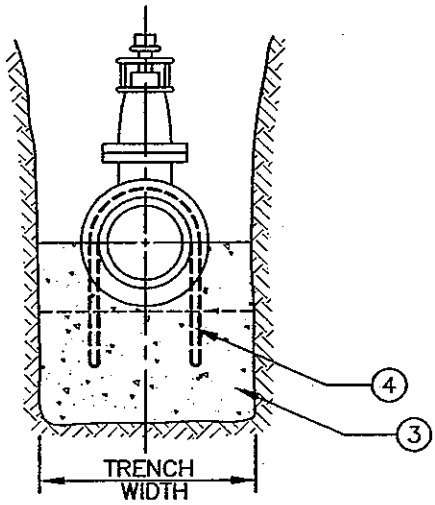

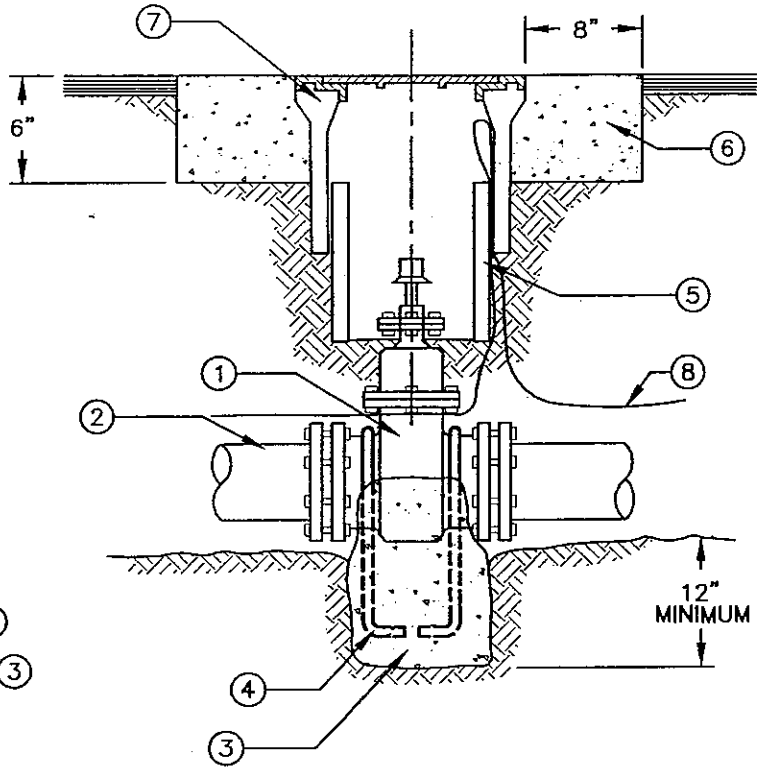

1. Water Valve, for 12 inch and smaller mains, the valve shall be as follows:
   - Gate valve, MJ x MJ
   - Resilient seated, with fully encapsulated wedge
   - Epoxy coated inside and outside
   - Full size waterway
   - Non-rising stem, open to the left, with O-ring seals
   - Use Mueller, Clow, AVK or approved equal
2. Water Main
3. Concrete Anchor block, use for 8 inch and larger valves. Use Class B concrete poured against undisturbed soil, minimum of 12 inches below the undisturbed trench bottom. Protect valve with visqueen wrap. Provide clearance for flange bolts.
4. Anchor Rods, #4 rebar with 4" min. hooks, 3" minimum clearance from soil.
5. Riser, 8 inch minimum diameter. Use one continuous section of minimum SDR 35 PVC.
6. Concrete Collar.
   - A. In paved areas, trowel to street grade and cure for 48 hours prior ta traffic use.
   - B. In unpaved areas, trowel to 1/2" above finished ground, slope concrete to grade.
7. Traffic Valve Well and Cover. Christy G-5 or approved equal with cast iron lid marked "Water".
8. 10 Gage Tracer Wire.

LOS OSOS COMMUNITY SERVICES DISTRICT

APPROVED BY THE DISTRICT ENGINEER DATE

LOS OSOS COMMUNITY SERVICES DISTRICT
STANDARD DRAWING

WATER VALVE

W-3

NO SCALE

Revisions	Appd.	Date

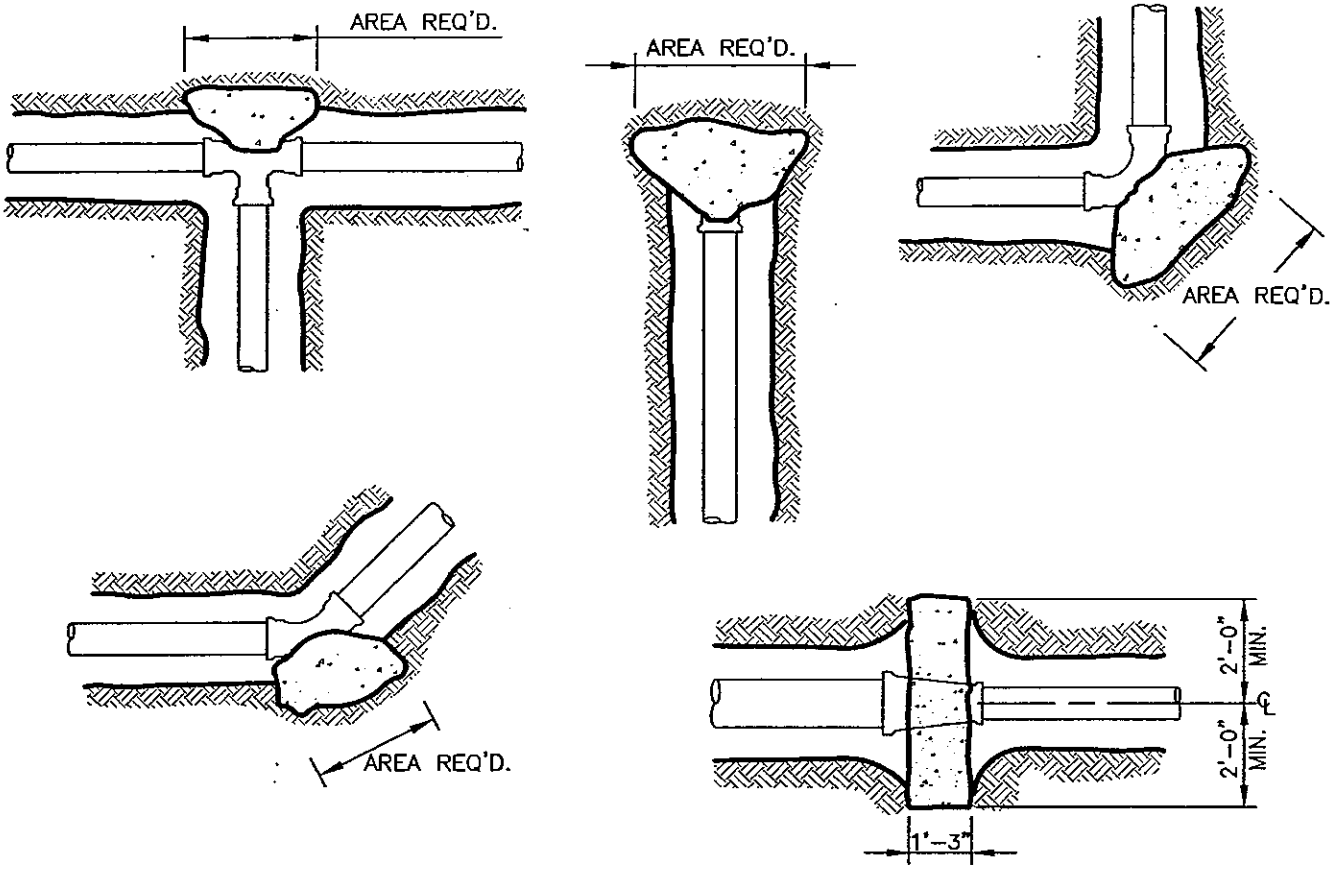

PIPE	REQUIRED AREA (square feet) TEE'S & DEAD ENDS	90°	45°	22 1/2°	11 1/4°	REQUIRED AREA (square feet) TEE'S & DEAD ENDS	90°	45°	22 1/2°	11 1/4°
4" CL 150	2.8	3.9	2.1	1.0	1.0	5.6	7.8	4.3	2.2	1.0
6" CL 150	5.7	8.1	4.4	2.2	1.0	11.5	16.5	8.7	4.4	2.0
8" CL 150	10.0	14.0	7.6	3.8	2.0	20.0	28.0	15.5	7.7	3.8
12" CL 150	23.0	32.5	18.0	8.9	4.5	46.0	65.0	35.5	18.0	8.9
4" CL 200	3.7	5.2	2.8	1.4	1.0	7.4	10.5	5.7	2.9	1.4
6" CL 200	7.6	11.0	5.8	2.9	1.5	15.5	21.5	12.0	5.9	2.9
8" CL 200	13.0	18.6	10.0	5.1	2.6	26.5	37.0	20.0	10.5	5.1
12" CL 200	31.0	43.5	23.5	12.0	5.9	61.5	87.0	47.0	24.0	12.0
	Sandy Soil, LATERAL BEARING=1000 psf					Soft Clay Soil, LATERAL BEARING=500 psf				

1 Thrust block shall bear against undisturbed earth.
2 Protect fittings with 10 mil visqueen to prevent bonding with concrete.
3 For other soil types multiply areas by the ratio of allowable bearing values.
4 Test pressure shall not exceed the pressure class of the pipe.
5 Other lateral bearing pressures per Soils Engineer.

LOS OSOS COMMUNITY SERVICES DISTRICT

APPROVED BY THE DISTRICT ENGINEER DATE

LOS OSOS COMMUNITY SERVICES DISTRICT
STANDARD DRAWING

THRUST BLOCKS

W—4

NO SCALE

Revisions	Appd.	Date

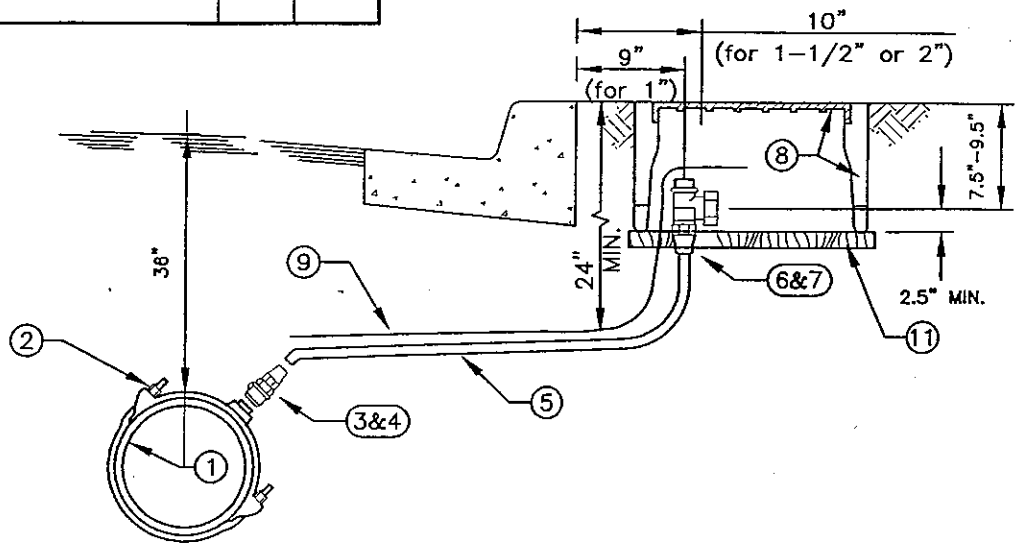

		3/4" AND 1" METERS
1	Water Main	Per Plan
2	Service Saddle	Bronze, Double strap, James Jones J-979 for AC pipe James Jones J-969 for PVC pipe Or Approved Equal
3	Corporation Stop	Groundkey: James Jones J-1944 1" size only, MIP x MIP #41
4	Adapter	1" FIP x Instatite, Mueller H15456
5	Service Lateral	1" Polyethelyne only IPS Size, 200 psi minimum, Westflex Gold Label 3408, Driscopipe, or approved equal.
6	Angle Meter Stop (Ball Type)	James Jones J-1527 (1"x1" or 1"x 3/4")
7	Adapter	1" MIP x Instatight H15456
8	Meter Box and Lid	3/4" and 1" meters use, Brooks 37 Series (Traffic Lid in traffic area only)
9	10 Gage Tracer Wire per specifications.	
10	In unpaved areas, raise meter box 1" above the adjacent finished surface.	
11	1" x 12" Concrete Base	
12	Customer Side Curb Stop - Jones J 1913W	

LOS OSOS COMMUNITY SERVICES DISTRICT

APPROVED BY THE DISTRICT ENGINEER DATE

LOS OSOS COMMUNITY SERVICES DISTRICT
STANDARD DRAWING

SINGLE WATER SERVICE

W-5

NO SCALE

Revisions	Appd.	Date

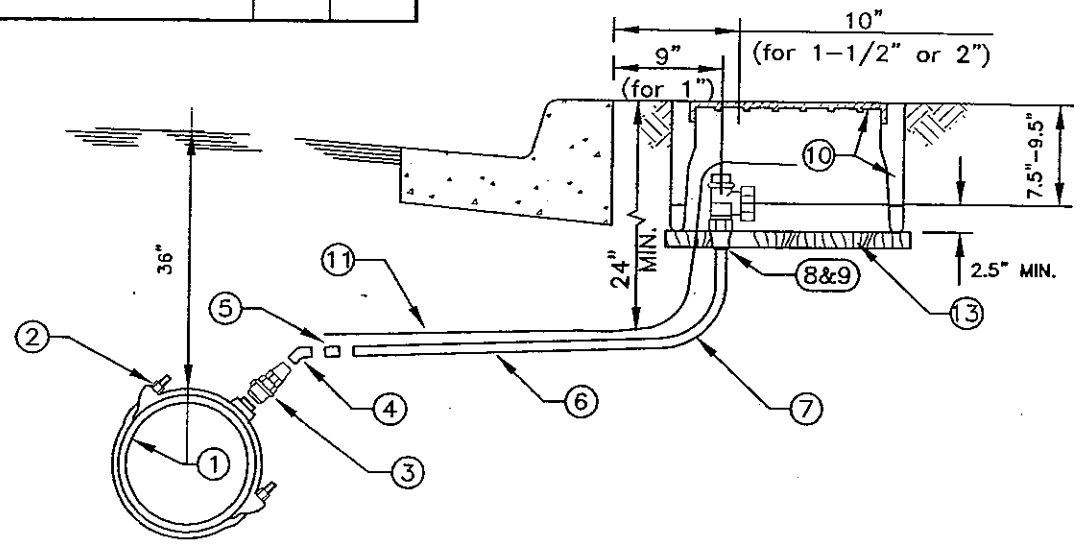

		1-1/2" AND 2" METERS
1	Water Main	Per Plan
2	Service Saddle	Bronze, Double strap, James Jones J-979 for AC pipe James Jones J-969 for PVC pipe Or Approved Equal
3	Corporation Stop	Ball Valve: James Jones J-1943 2" size only, MIP x MIP
4	Brass 45° El	2" 45° Elbow Only
5	Adapter	FORD 2" Pac Coupling x MIP
6	Service Lateral	2" Sch 80 PVC Only
7	90° Elbow	2" Sch 80 90° Elbow
8	Angle Meter Stop (Ball Type)	FORD FB11027
9	Adapter	2" SCH 80 MIP x SOC
10	Meter Box and Lid	1 1/2" meters use, Brooks 38 Series 2" meters use, Brooks 65 Series (Traffic Lid if in driveway)
11	10 Gage Tracer Wire per specifications.	
12	In unpaved areas, raise meter box 1" above the adjacent finished surface.	
13	1" x 12" Concrete Base	
14	Customer Side Curb Stap – JF108	

LOS OSOS COMMUNITY SERVICES DISTRICT

APPROVED BY THE DISTRICT ENGINEER DATE

LOS OSOS COMMUNITY SERVICES DISTRICT
STANDARD DRAWING

SINGLE WATER SERVICE

W-5a

NO SCALE

Revisions	Appd.	Date

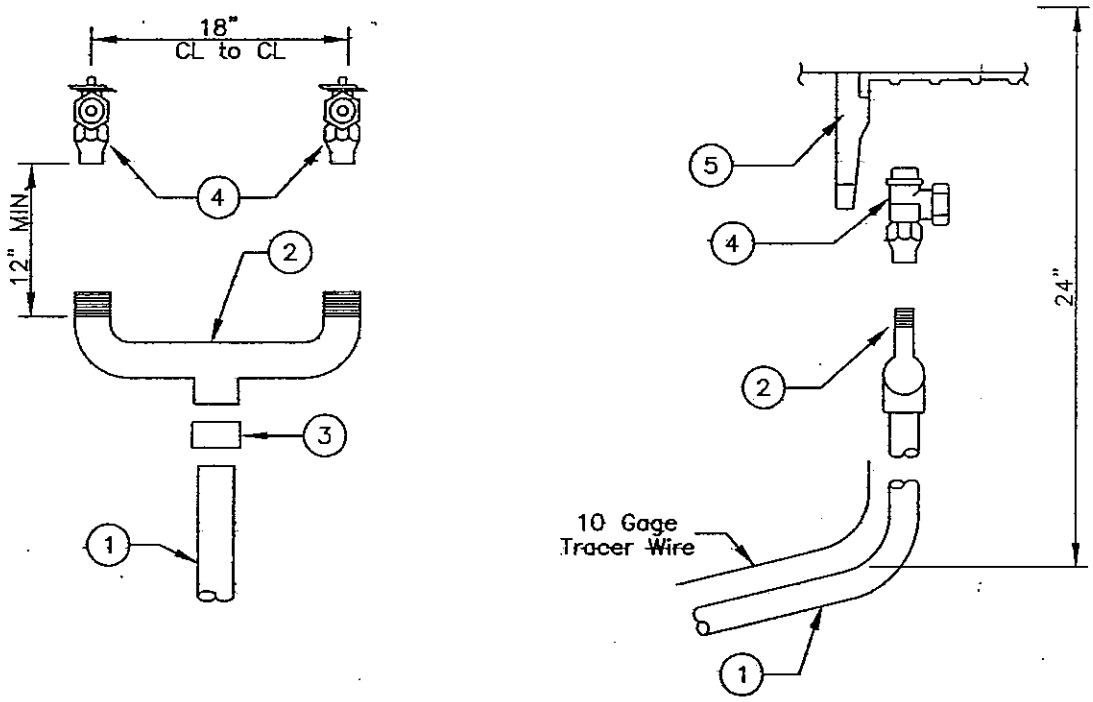

1. 1" P.E. Tube I.P.S
2. 1" FIP x 3/4" MIP Brass Branch "T"
3. 1" MIP Instatight – H15456 I.P.S
4. Angle meter stop – 3/4" x 3/4" J1527
5. Meter box per Drawing W–5.

A. Each meter shall be identified with the service address and/or unit by attaching a brass tag to the curb stop with a non–ferrous wire.

B. Meter boxes shall be placed in order corresponding to the addresses.

APPROVED BY THE DISTRICT ENGINEER DATE

LOS OSOS COMMUNITY SERVICES DISTRICT
STANDARD DRAWING

DUPLEX SERVICE

W–6

NO SCALE

Revisions	Appd.	Date

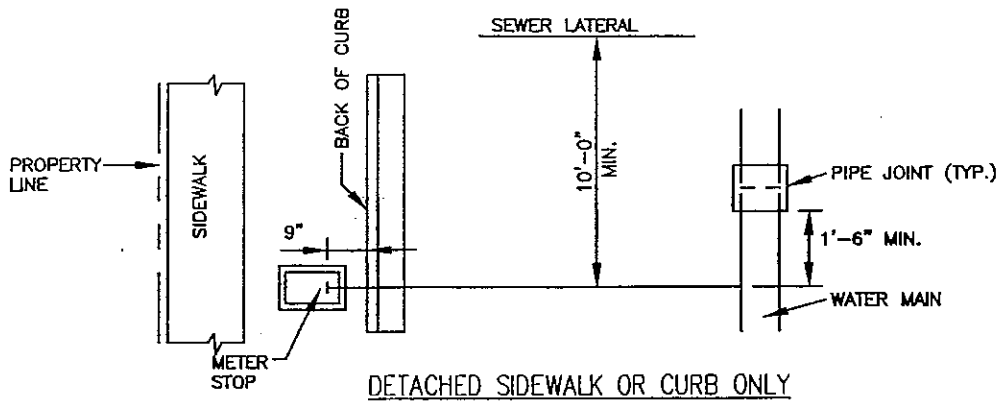

DETACHED SIDEWALK OR CURB ONLY

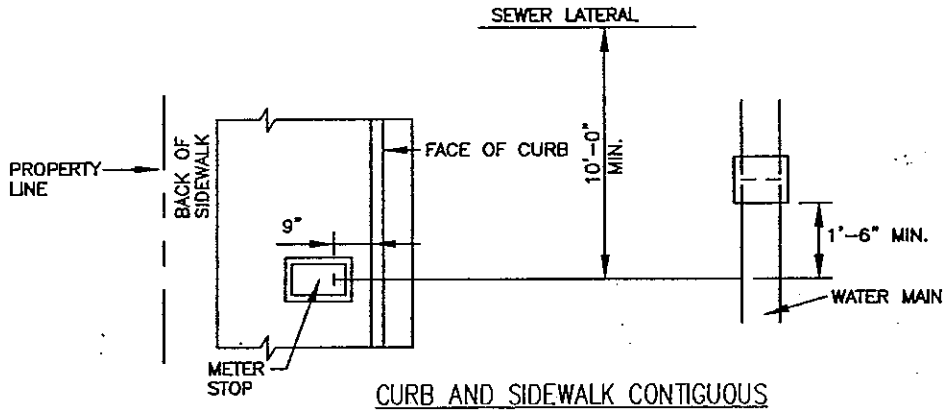

CURB AND SIDEWALK CONTIGUOUS

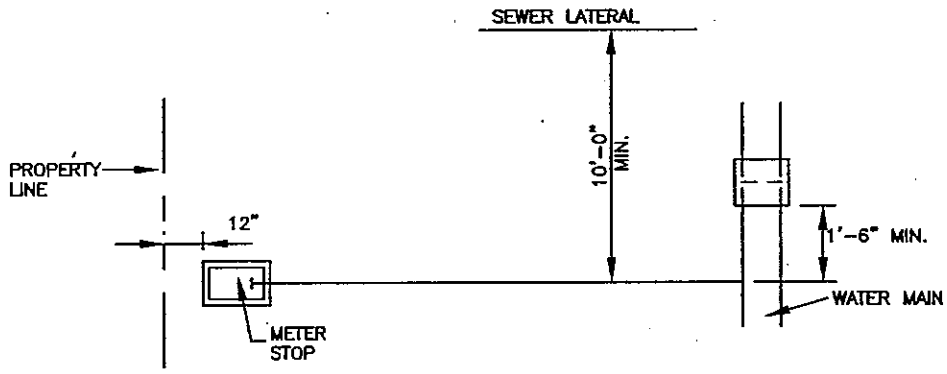

WITHOUT CURB AND SIDEWALK

NOTE: ALL BOXES ARE STANDARD METER BOXES.

1 Water lateral shall be 10 feet minimum from a sewer lateral unless approved otherwise.
2 Water connection shall be 1-1/2 feet minimum from a water main joint.
3 Meter box per Drawing W-5.
4 Water service connections to the main shall be separated by at least 18 inches.

APPROVED BY THE DISTRICT ENGINEER DATE

LOS OSOS COMMUNITY SERVICES DISTRICT
STANDARD DRAWING

WATER SERVICE LOCATION

W-7

NO SCALE

Revisions	Appd.	Date

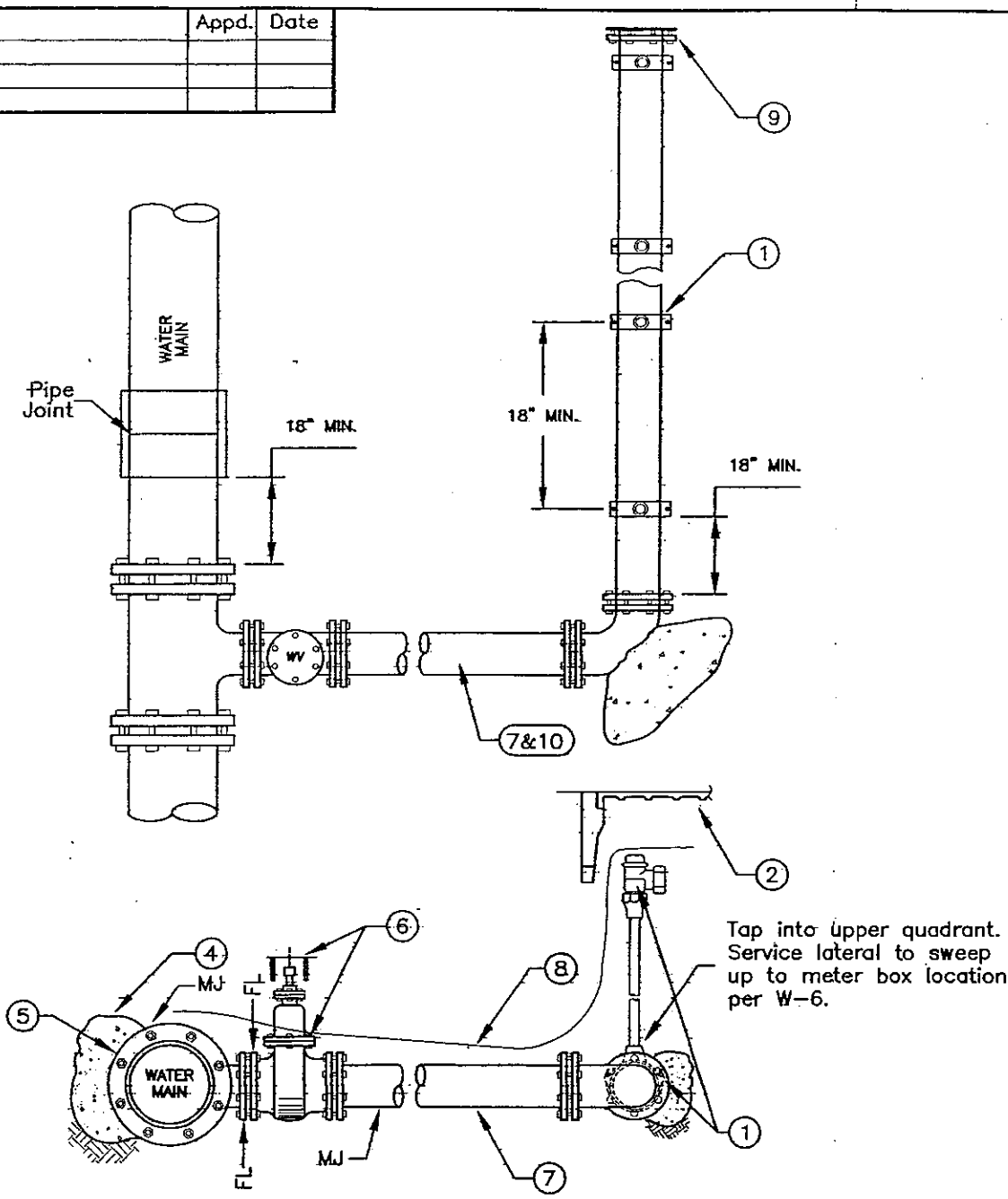

1. Six (6) or more 3/4" or 1" Water Services per Drawing W-5.
2. Install meter boxes per Drawing W-5.
3. The meter boxes shall be located per Drawing W-7.
4. Thrust Block Per Drawing W-4, shield concrete from flanges and bolts.
5. Mechanical Joint X Flanged Tee.
6. Valve and valve box per Drawing W-3.
7. Minimum 4" diameter C-900 PVC or DIP lateral with mechanical joint at each end.
8. 10 Gage tracer wire.
9. 4" MJ plug/ grip ring.
10. Maintain 10' horizontal separation to sewer lateral.

APPROVED BY THE DISTRICT ENGINEER DATE

LOS OSOS COMMUNITY SERVICES DISTRICT
STANDARD DRAWING

MULTIPLE WATER SERVICE MANIFOLD

W-8

NO SCALE

Revisions	Appd.	Date

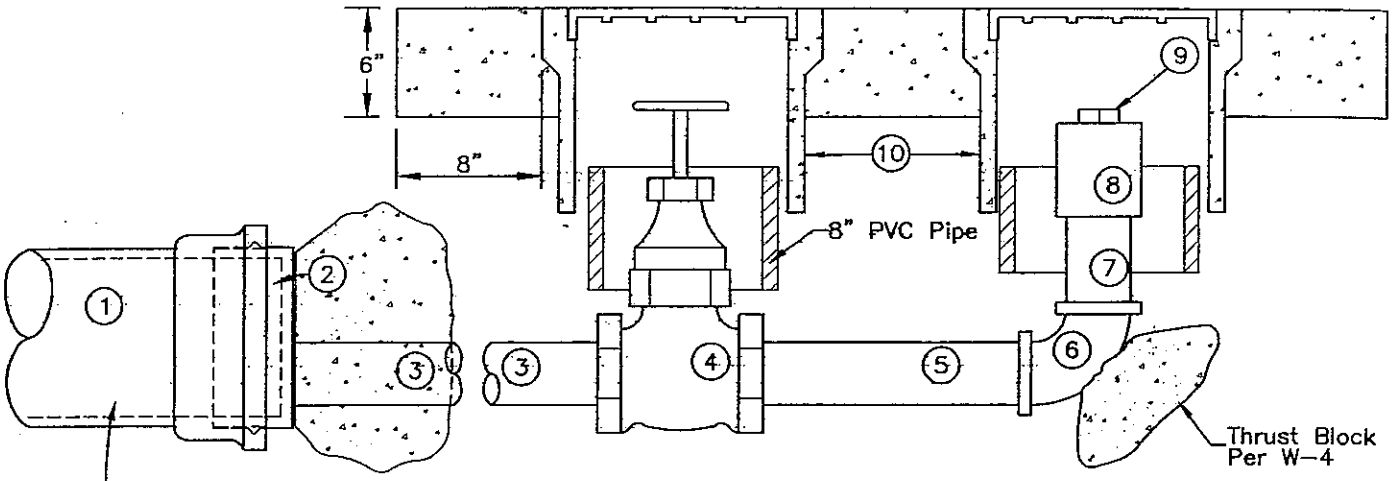

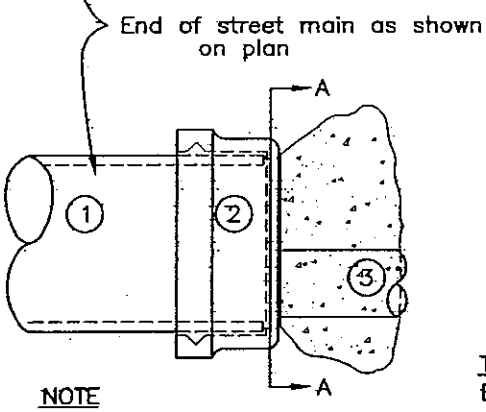

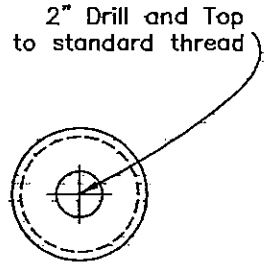

TYPICAL PLUG drilled for 2" Blowoff on 4" or 6" main.

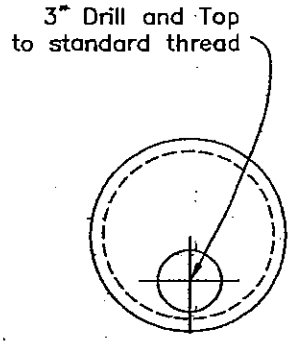

TYPICAL PLUG drilled for 3" or 4" Blowoff on 8" 10" or 12" main.

NOTE

Protect all fittings with plastic and pour thrust block at end of street main, shape and location to be determined in field. All Galvanized Pipe to be wrapped 20 mil.

SECTION A-A

SCHEDULE

1.	Water Main	4"	6"	8"	10"	12"
2.	Cast Iron Cap or Plug with Thrust Block	4"x2"	6"x2"	8"x3"	10"x4"	12"x4"
3.	Sch. 80 PVC Nipple	2"x18"	2"x18"	3"x18"	4"x18"	4"x18"
4.	Ball Valve or AWWA Gate Valve-Screw JT	2"	2"	3"	4"	4"
5.	Sch. 80 PVC or Galvanized Nipple	2"x8"	2"x8"	3"x10"	4"x10"	4"x10"
6.	Sch. 80 PVC or Galvanized 90° Ell	2"	2"	3"	4"	4"
7.	Sch. 80 PVC or Galvanized Riser	2"x26"±	2"x26"±	3"x32"±	4"x32"±	4"x32"±
8.	Sch. 80 PVC or Galvanized Coupling - Threaded	2"	2"	3"	4"	4"
9.	Sch. 80 PVC or Galvanized Plug	2"	2"	3"	4"	4"
10.	Valve Box Size (Collar Per Drawing W-2)	G-5	G-5	G-5	G-5	G-5

LOS OSOS COMMUNITY SERVICES DISTRICT

APPROVED BY THE DISTRICT ENGINEER DATE

LOS OSOS COMMUNITY SERVICES DISTRICT
STANDARD DRAWING

WATER BLOW-OFF

W-9

NO SCALE

Revisions	Appd.	Date

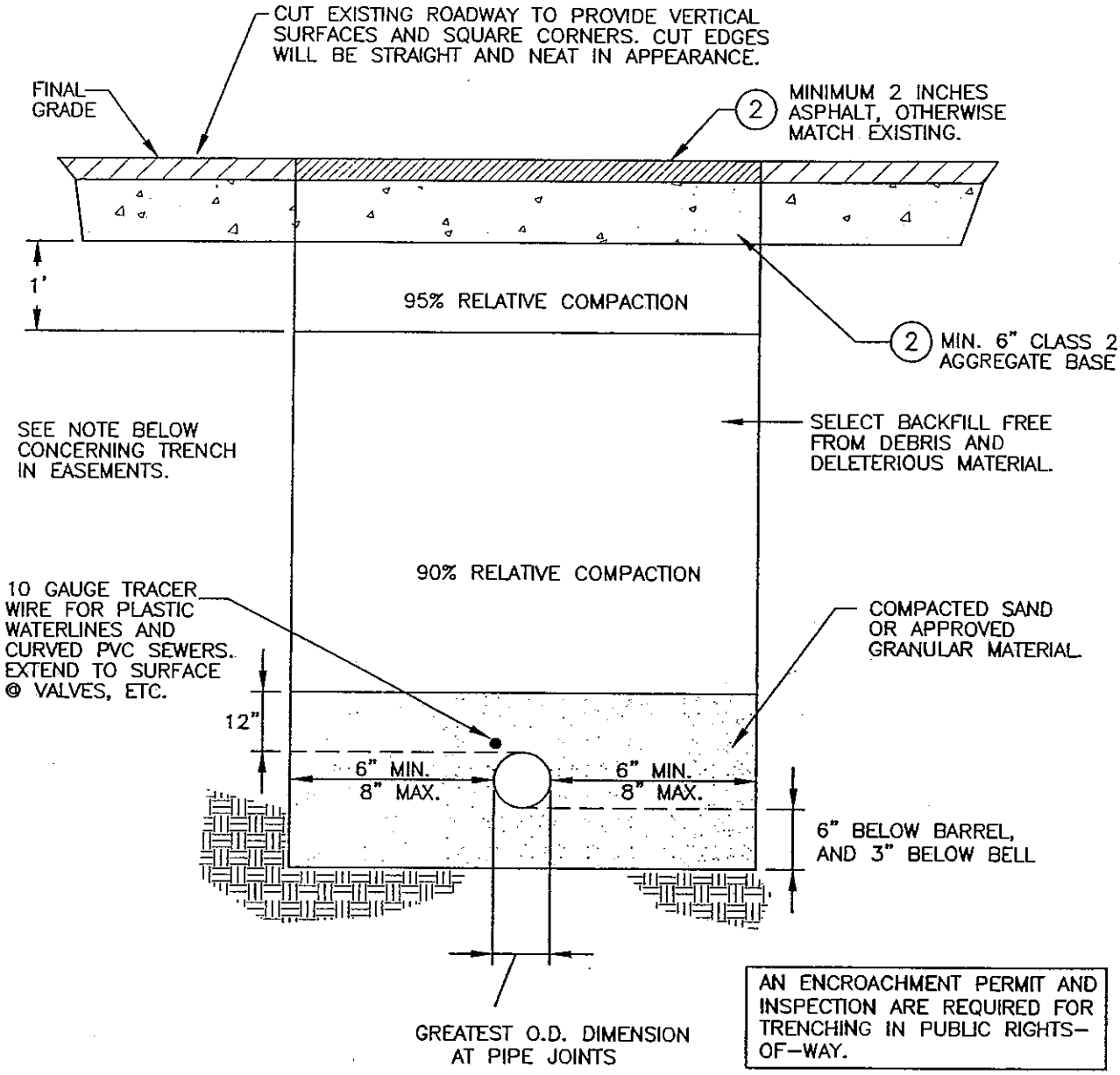

AN ENCROACHMENT PERMIT AND INSPECTION ARE REQUIRED FOR TRENCHING IN PUBLIC RIGHTS-OF-WAY.

NOTES:

1. A minimum of 90% relative compaction is permitted in a non-roadway trench when no structures are to be built over the trench. If structures are to be built over the trench, use relative compactions shown on the trench section above.
2. Pavement and base sections are minimums. Pavement sections shall also be no less than the existing structural sections, and as required by the county for trenches within a county right-of-way.

LOS OSOS COMMUNITY SERVICES DISTRICT

APPROVED BY THE DISTRICT ENGINEER DATE

LOS OSOS COMMUNITY SERVICES DISTRICT
STANDARD DRAWING

WATER & SEWER TRENCH

W-10

NO SCALE

Revisions	Appd.	Date

CRITERIA FOR THE SEPARATION OF WATER MAINS AND SANITARY SEWERS

CASE 1
NEW SEWER MAIN BEING INSTALLED
(See Figure 1)

ZONE	SPECIAL CONSTRUCTION REQUIRED FOR SEWER:
A	Sewer lines parallel to water mains shall not be permitted in this zone without approval from the responsible health agency and water supplier.
B	A sewer line placed parallel to a water line shall be constructed of: 1. Plastic sewer pipe with rubber ring joints (per ASTM D3034) or equivalent. 2. Cast or Ductile iron pipe with compression joints.
C	A sewer line crossing a water main shall be constructed of: 1. Ductile iron pipe with hot dip bituminous coating and mechanical joints. 2. A continuous section of Class 200 (DR 14 per AWWA C900) plastic pipe, or equivalent. centered over the pipe being crossed. 3. Any sewer pipe within a continuous sleeve.
D	A sewer line crossing a water main shall be constructed of: 1. A continuous section of ductile iron pipe with hot dip bituminous coating. 2. A continuous section of Class 200 (DR 14 per AWWA C900) plastic pipe or equivalent. centered over the pipe being crossed. 3. Any sewer pipe within a continuous sleeve. 4. Any sewer pipe separated by a ten-foot by ten-foot, four-inch thick reinforced concrete slab.

CASE 2
NEW WATER MAIN BEING INSTALLED
(See Figure 2)

ZONE	SPECIAL CONSTRUCTION REQUIRED FOR WATER:
A	No water mains parallel to service shall be constructed without approval from the health agency
B	If the sewer paralleling the water main does not meet the Case 1, Zone B requirements, the water main shall be constructed of: 1. Ductile iron pipe with hot dip bituminous coating. 2. Dipped and wrapped one-fourth-inch-thick welded steel pipe. 3. Class 200 pressure rated plastic water pipe (DR 14 per AWWA C900) or equivalent. 4. Reinforced concrete pressure pipe, steel cylinder type, per AWWA (C300-74, C301-79 or C303-70). 5. Class 200, Type II, asbestos-cement pressure pipe.
C	If the sewer crossing the water main does not meet the Case 1, Zone C requirements, the water main shall have no joints in Zone C and be constucted of: 1, 2, 3 or 4 as in Zone B, above.
D	If the sewer crossing the water main does nat meet the Case 1, Zone D requirements, the water main shall have no joints within four feet from either side of the sewer and shall be constructed of: 1, 2, 3 or 4 as in Zone B, above.

APPROVED BY THE DISTRICT ENGINEER. DATE

LOS OSOS COMMUNITY SERVICES DISTRICT
STANDARD DRAWING

WATER AND SEWER SEPARATION NOTES

W-11

NO SCALE

Revisions	Appd.	Date

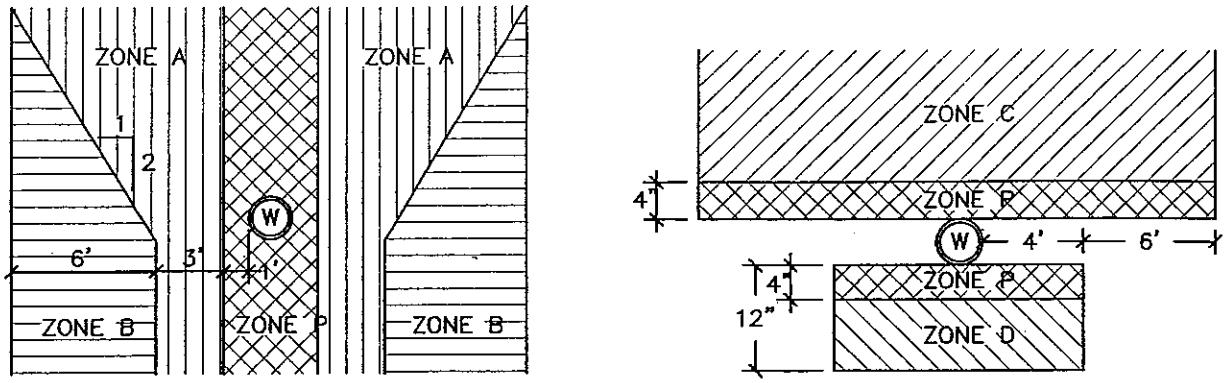

PARALLEL

CASE 1
NEW SEWER MAIN
Figure 1

CROSSING

ZONE P is a prohibited zone. Section 64630(e)(2) California Administrative Code, Title 22.

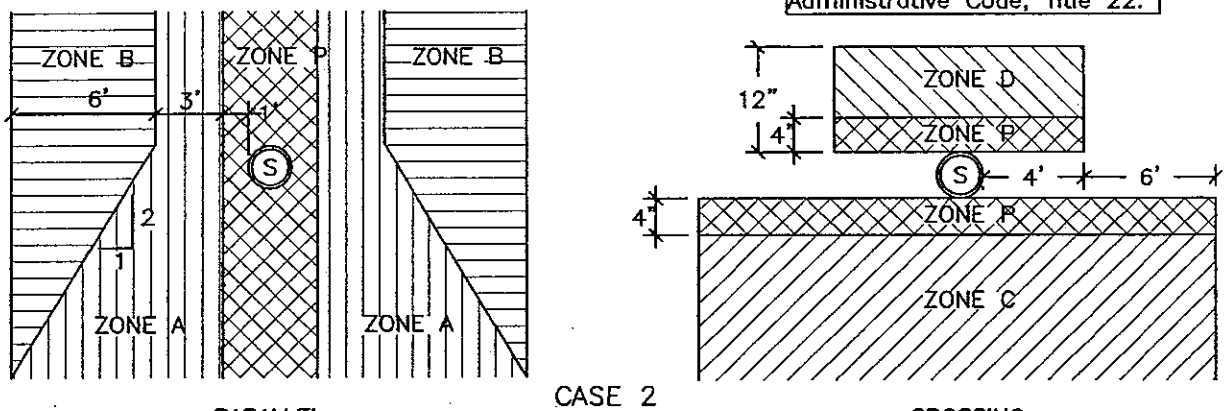

PARALLEL

CASE 2
NEW WATER MAIN
Figure 2

CROSSING

NOTES AND DEFINITIONS

- COMPRESSION JOINT – A push–on joint that seals by means of the compression of a rubber ring or gasket between the pipe and a bell of coupling.
- DIMENSIONS are from the outside of water main to outside of sewer line or manhole.
- FUSED JOINT – The joining of sections of pipe using thermal or chemical bonding processes.
- GROUND WATER – Subsurface water found in the saturation zone.
- HEALTH AGENCY – The State Depoartment of Health Services. For those water systems supplying less than 200 service connections, the local health officer shall act for the Department of Health Services.
- HOUSE LATERAL – A sewer pipe connecting the building drain and the main sewer line.
- LOW HEAD WATER MAIN – Any water main which has a pressure of 5 psi or less at any time at any point in the main.
- MECHANICAL JOINT – Bolted jaint
- RATED WORKING WATER PRESSURE or PRESSURE CLASS – A pipe classification system based upon internal working pressure of the fluid in the pipe, type of pipe material, and the thickness of the pipe wall.
- SLEEVE – A protective tube of steel with a wall thickness of not less than one–fourth inch into which a pipe is inserted.
- WATER SUPPLIER – Any person who owns or operates a public water system

APPROVED BY THE DISTRICT ENGINEER DATE

LOS OSOS COMMUNITY SERVICES DISTRICT
STANDARD DRAWING

WATER AND SEWER
SEPARATION DIAGRAM

W–12

NO SCALE

Revisions	Appd.	Date

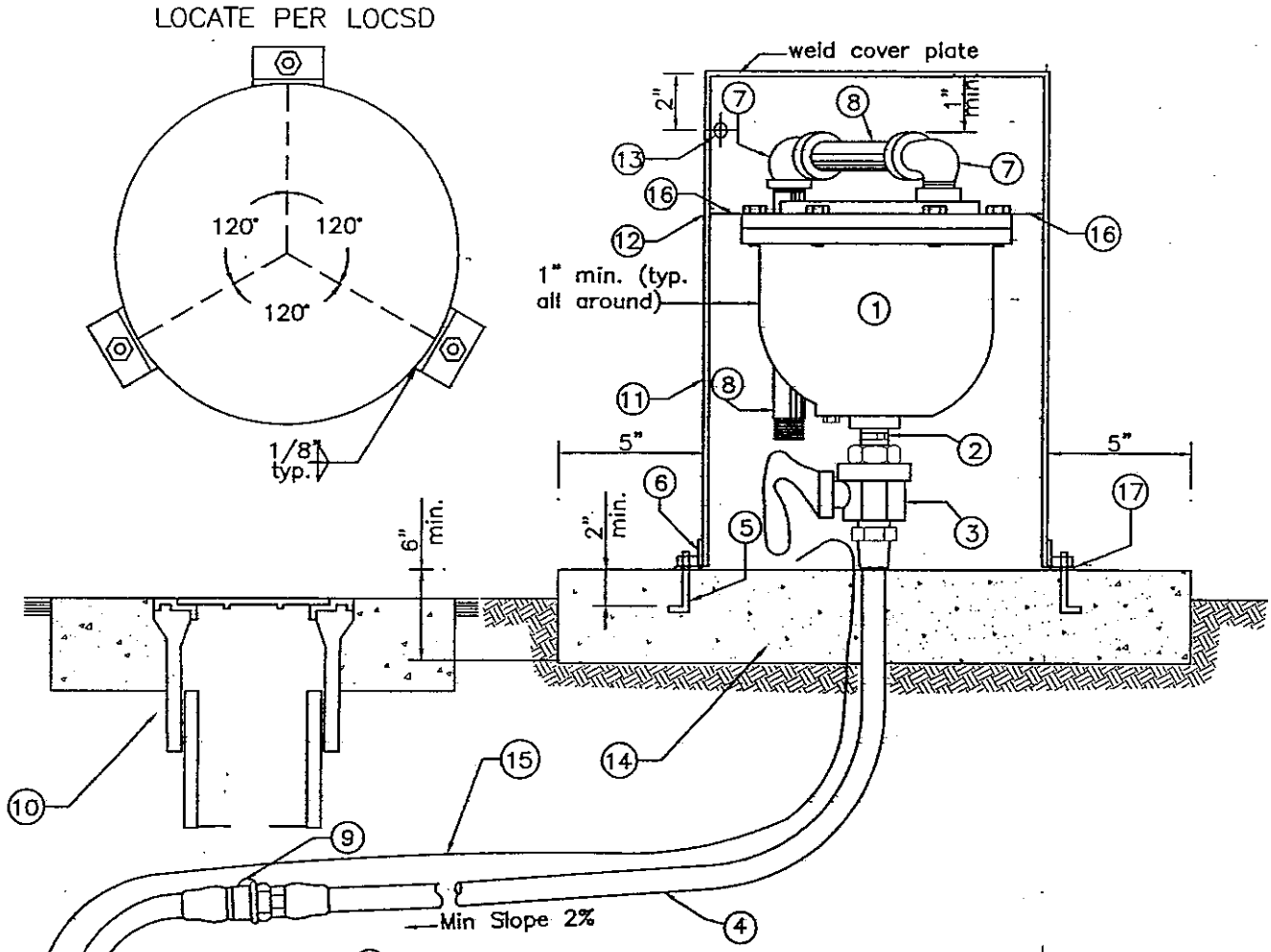

1. Combinotion Air Release Valve – Crispex (1" or 2") per plan or approved equal
2. Nipple – brass, short
3. Ball Valve to match size of Air Release Valve
4. 1" or 2" service (to match size of air release valve), Sch 80 PVC or PE
5. Cadmium plated bent bolts 1/2" (typ. 3 places) with nuts
6. Angle – galv. Steel 1 1/2" x 1 1/2", 2" long (typ. 2 places)
7. Nipple and elbow – PVC
8. Nipple – 10" PVC
9. Ball Valve per LOCSD – J1943 (1") or J1943 (2")
10. Valve Box & Riser per LOCSD Detail W-3
11. 20" DIA. 24" Fall. min. 10 ga. steel
12. Paint with zinc-oxide primer and 2 coats of Dawn Blue 325
13. Drill min. of 6-1/2" dia. Holes on circumferences evenly spaced
14. P.C.C. slab – 30"x30"x6" thick, 3000 psi Class 2 Concrete
15. 10 gage tracer wire per specifications
16. GALV Steel strap with bolted connections
17. 1/8" Spacers (typ. 3 places)

APPROVED BY THE DISTRICT ENGINEER DATE

LOS OSOS COMMUNITY SERVICES DISTRICT
STANDARD DRAWING

AIR & VACUUM RELEASE ASSEMBLY

W-13

NO SCALE

Revisions	Appd.	Date

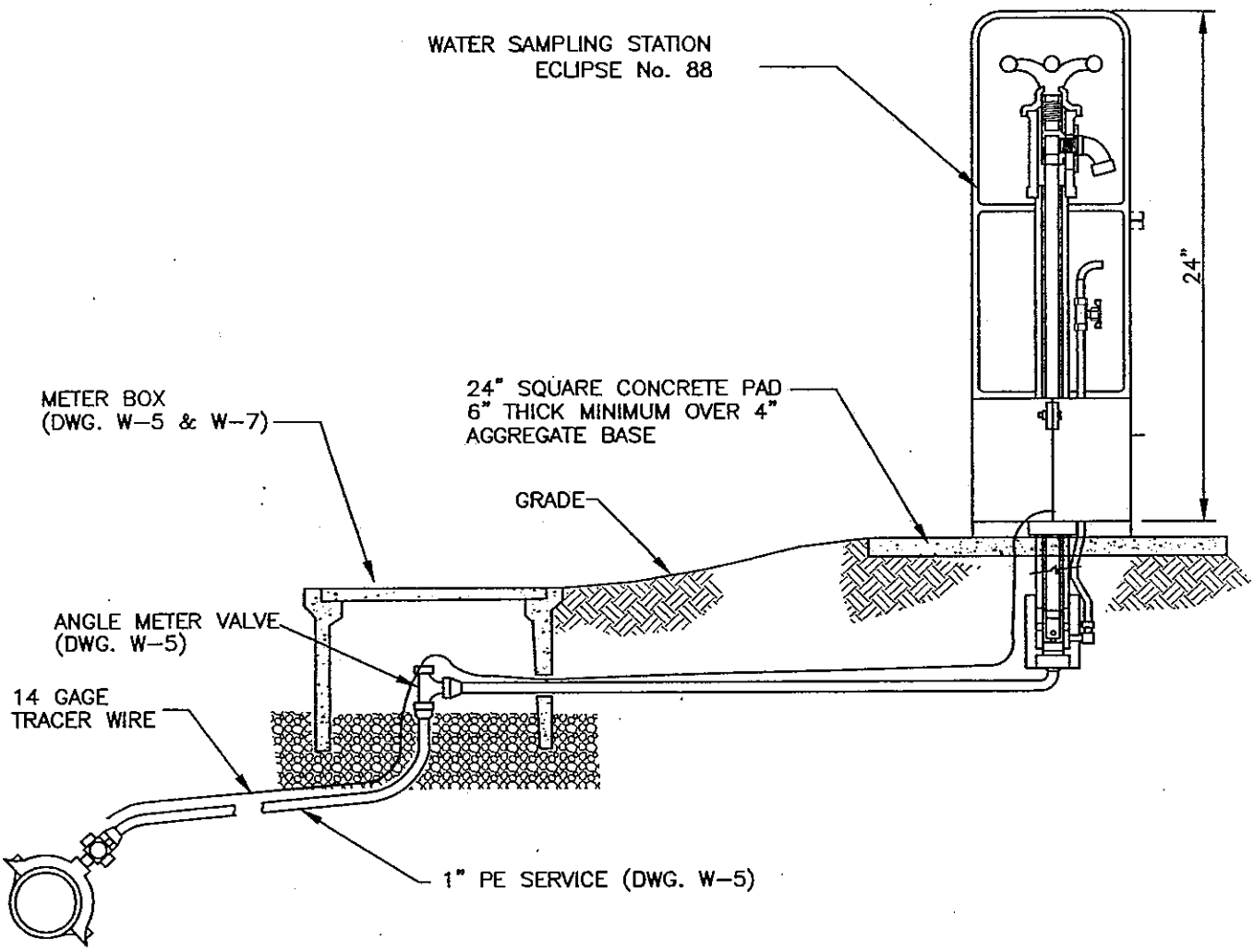

APPROVED BY THE DISTRICT ENGINEER DATE

LOS OSOS COMMUNITY SERVICES DISTRICT
STANDARD DRAWING

WATER SAMPLING STATION

W-14

NO SCALE

Revisions	Appd.	Date

SIZE	HEIGHT	PAD LENGTH
4"	27"	8'
6"	30"	9'
8"	33"	10'
10"	36"	12'

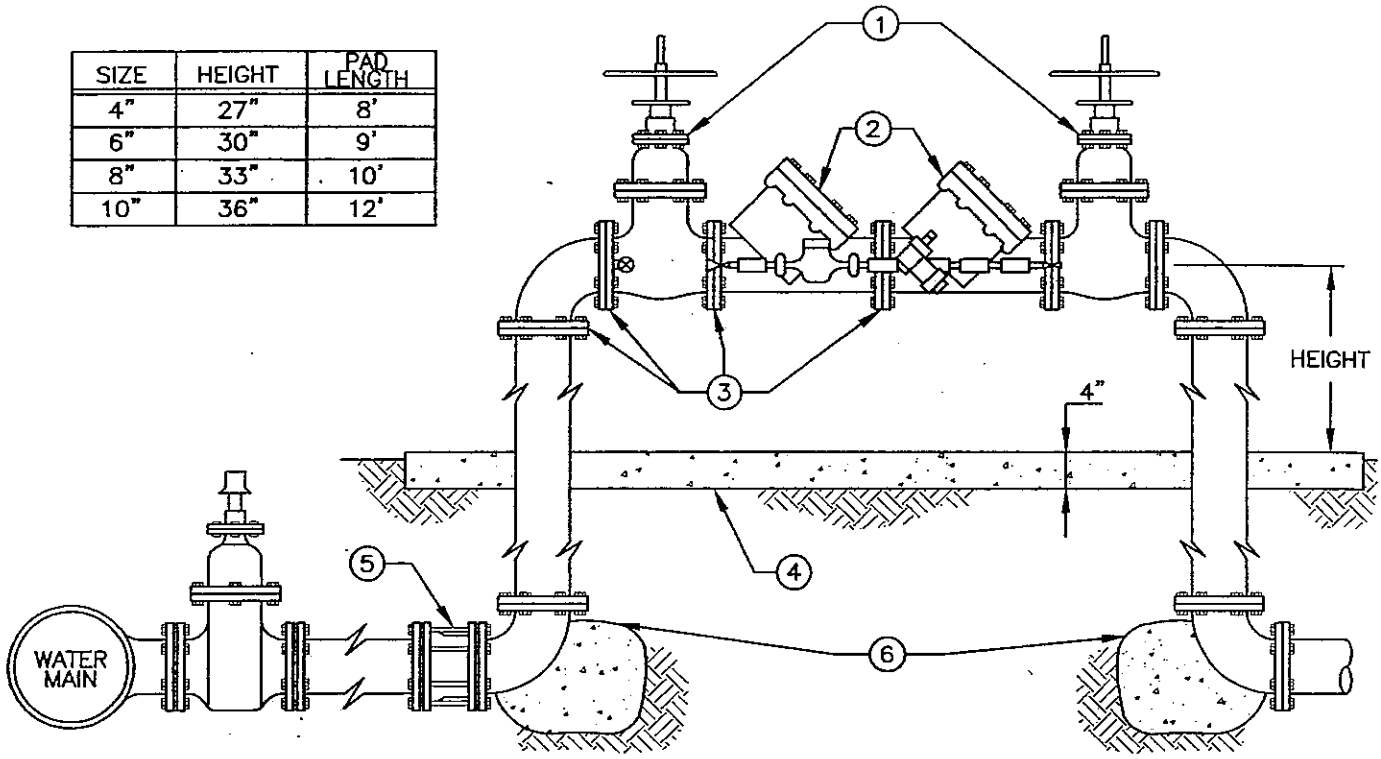

1. OS&Y gate valve with fully–encapsulated resilient seat – Mueller, Clow or A.V.K. (conforming to the latest edition of the AWWA standard C509–80)
2. U.S.C. approved double detector check valve backflow preventer assembly, with 3/4" non–valved bypass meter assembly.
3. All risers and above–ground mainline fittings shall be D.I.P. flange–type.
4. P.C.C. pad, 12" minimum around risers, 5–sack.
5. M.J. x Flange adaptor (or M.J. x Flange 90° ell.)
6. P.C.C. thrust blocks, 5–sack.
7. OS&Y gate valves and backflow preventer to have factory applied epoxy coating.
8. Entire assembly above ground to be painted blue.

APPROVED BY THE DISTRICT ENGINEER DATE

LOS OSOS COMMUNITY SERVICES DISTRICT
STANDARD DRAWING

DOUBLE CHECK VALVE ASSEMBLY

W–15

NO SCALE

Revisions	Appd.	Date

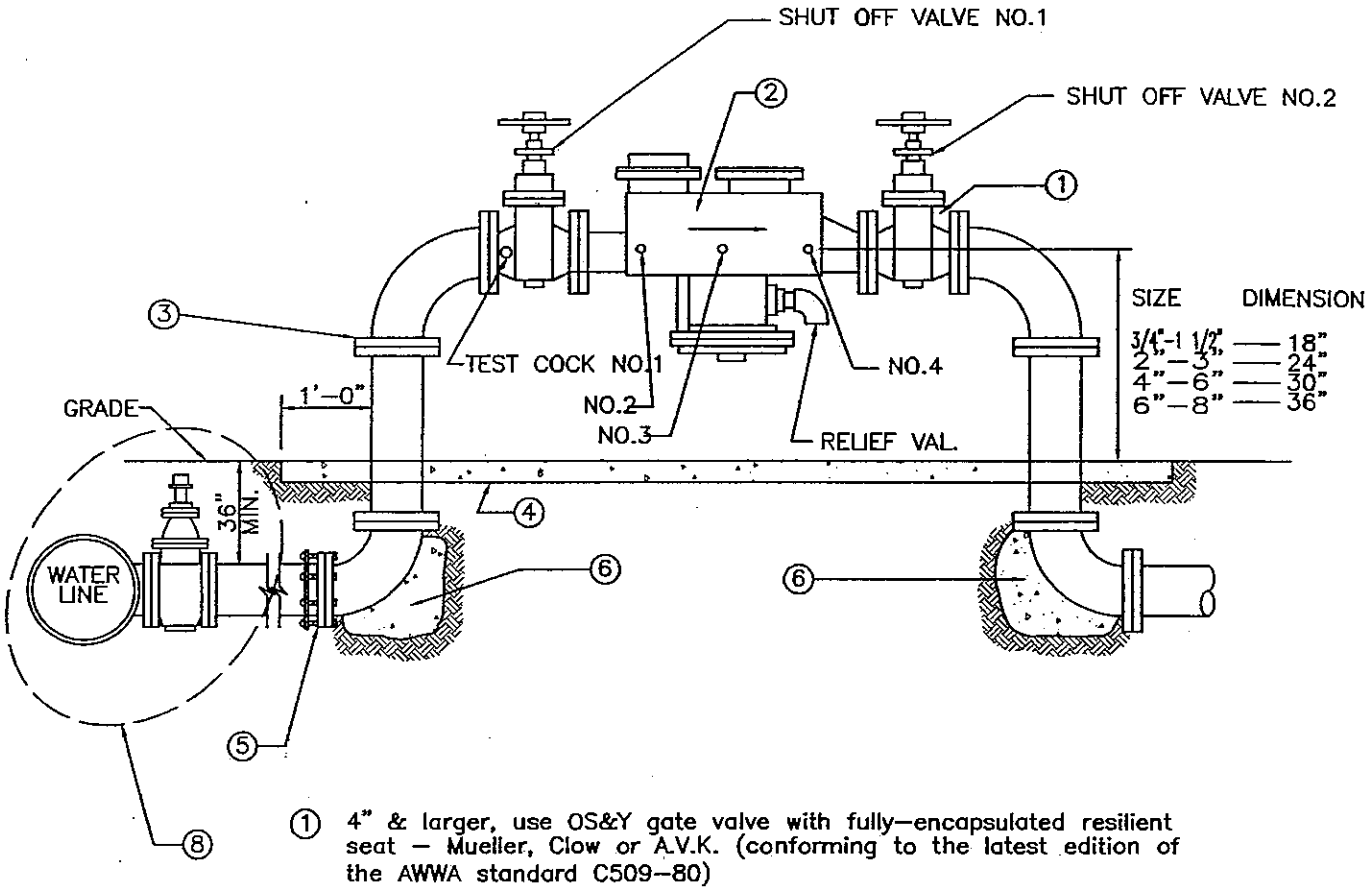

① 4" & larger, use OS&Y gate valve with fully–encapsulated resilient seat – Mueller, Clow or A.V.K. (conforming to the latest edition of the AWWA standard C509–80)

② U.S.C. approved reduced pressure principle valve backflow preventer assembly, with 3/4" non–valved bypass meter assembly.

③ For 4" & larger, all risers and above–ground mainline fittings shall be flange–type.

④ P.C.C. pad, 18" minimum around risers, 5–sack

⑤ M.J. x Flange adaptor (or M.J. x Flange 90° ell)

⑥ P.C.C. thrust blocks, 5–sack.

⑦ For 4" & smaller, use galvenized iron pipe fittings.

⑧ For 1" through 2": service connection (no gate valve required) shall be constructed per W–5.
For 3" through 12": service connection shall be constructed per W–1 with a tee, gate valve and thrust block.

⑨ OS&Y gate valves and reduced pressure principle valve backflow preventer to have factory applied epoxy coating.

⑩ Entire assembly above ground to be painted blue.

APPROVED BY THE DISTRICT ENGINEER DATE

LOS OSOS COMMUNITY SERVICES DISTRICT
STANDARD DRAWING

REDUCED PRESSURE VALVE ASSEMBLY

W–16

NO SCALE

Revisions	Appd.	Date

NOTE:

Street crossings by utilities require a minimum of 30" cover and to be at right angles where ever possible.

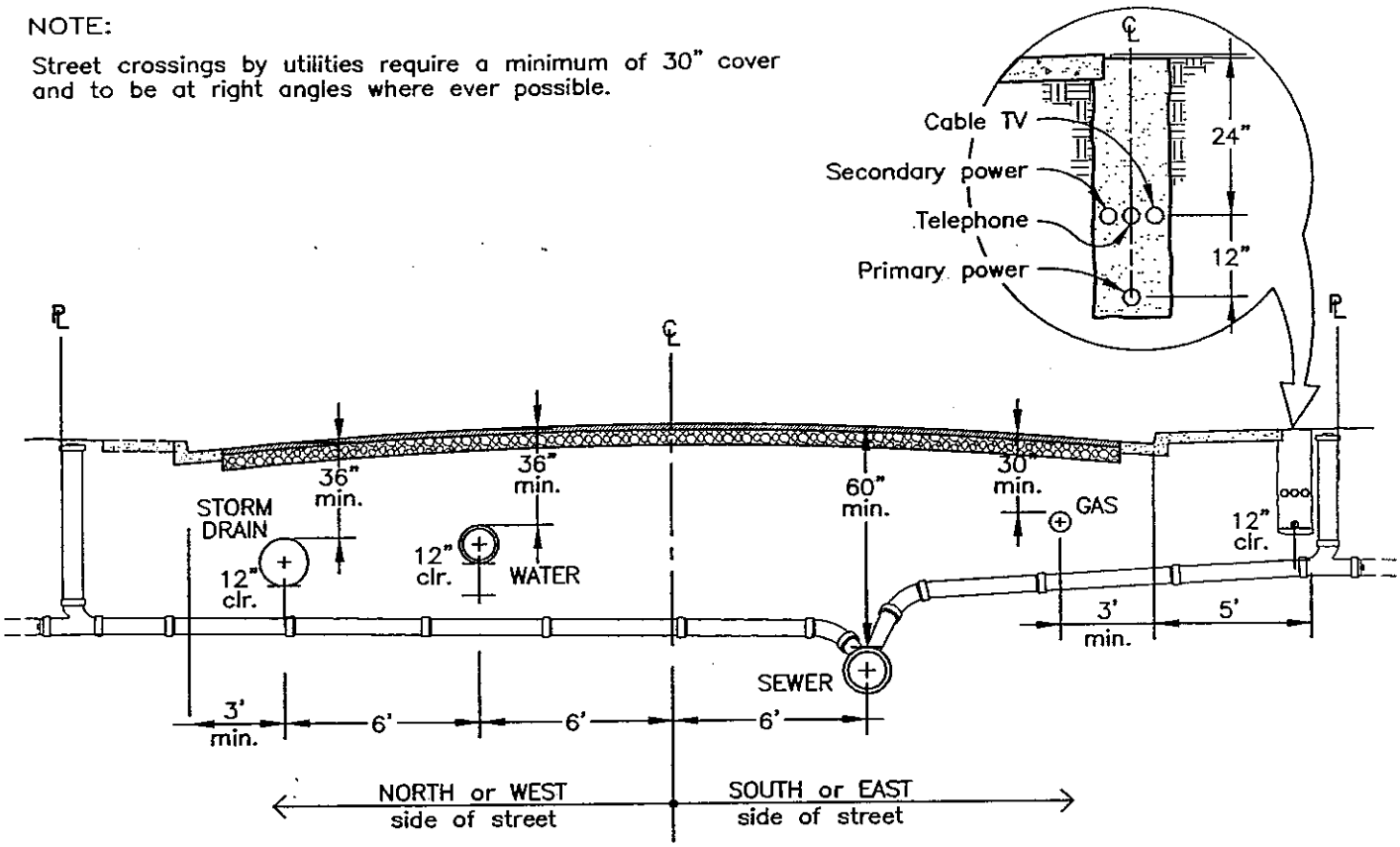

SURFACE IMPROVEMENTS WITH CONCRETE CURB, GUTTER, & SIDEWALK

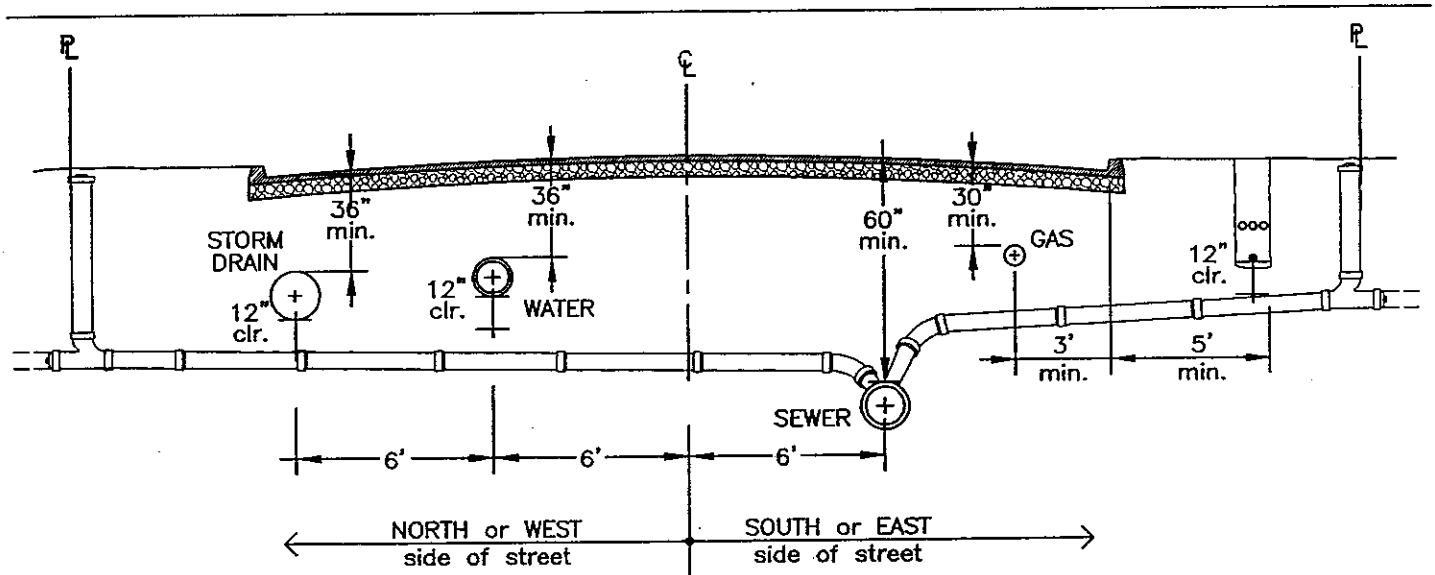

SURFACE IMPROVEMENTS WITH A.C. BERM

LOS OSOS COMMUNITY SERVICES DISTRICT

APPROVED BY THE DISTRICT ENGINEER DATE

LOS OSOS COMMUNITY SERVICES DISTRICT
STANDARD DRAWING

UTILITIES LOCATION

U—1

NO SCALE

Revisions	Appd.	Date
1. Added On 10/30/01		
2. Text Revised on 12/20/01		
3. Text Revised on 01/11/02		

LOS OSOS COMMUNITY SERVICES DISTRICT
STANDARD CONSTRUCTION NOTES

1. ***Approved Plans*** - No construction shall be started without plans approved by the Los Osos Community Services District (LOCSD). The LOCSD Inspector shall be notified at least 48 hours prior to starting of construction. Any construction done without approved plans and prior to notification to the LOCSD Inspector will be rejected and will be at the Contractor's and/or Owner's risk.

   The Contractor shall have copies of the approved plans for this project on the site at all times and shall be familiar with all applicable standards and specifications.

2. ***Standard Specifications*** - All construction work and installations shall conform to the LOCSD Standard Plans and Specifications, and all work shall be subject to the approval of the LOCSD Engineer.

3. ***Inspection Agreement*** - An executed inspection agreement is required prior to the start of construction.

4. ***Inspection*** - The LOCSD Inspector, acting on behalf of the LOCSD Engineer, may require revisions to the approved Plans and Specifications to solve unforeseen problems that may arise in the field.

5. ***Encroachment Permits*** - No work within a County or Caltrans right-of-way shall be performed without an encroachment permit.

6. ***Utility Notification*** - Prior to beginning any earthwork, the Contractor shall be responsible for contacting all agencies involved and shall locate all facilities prior to excavation in any area. The Contractor shall call Underground Service Alert (USA), toll free at 1-800-642-2444 at least 48 hours prior to the start of construction.

7. ***Existing Utilities*** - The locations and elevations of existing utilities where shown on the plans are based on available records, and are approximate only. The Contractor agrees that he shall assume sole and complete responsibility for locating or having located all underground utilities and other facilities and for protecting the same during the course of constructing the project. Any deviations from the plan location of any existing facilities shall be immediately brought to the attention of the LOCSD Inspector.

8. ***Safety*** - Neither the Los Osos Community Services District or the Engineer of Record will be responsible for compliance with safety measures or regulations. The Contractor (including the Owner/Builder) shall design, construct, and maintain all safety devices, and shall be solely responsible for conforming to all Local, State, and Federal, Safety and Health Standards, Laws, and Regulations. 3

9. *Indemnification* - The Applicant agrees that in accordance with generally accepted construction practices, Applicant shall assume sole and complete responsibility for the condition of the job site during the course of the project, including the safety of persons and property; that this requirement shall apply continuously and not be limited to normal working hours; and the Applicant shall defend, indemnify, and hold the District and District's agents, employees and consultants harmless from any and all claims, demands, damages, costs, expenses (including attorney's fees), judgements or liabilities arising out of the performance or attempted performance of the work on this project; except those claims, demands, damages, costs, expenses (including attorney's fees), judgements or liabilities resulting from the negligence or willful misconduct of the District. 2

LOS OSOS COMMUNITY SERVICES DISTRICT

APPROVED BY THE DISTRICT ENGINEER DATE

LOS OSOS COMMUNITY SERVICES DISTRICT
STANDARD DRAWING

STANDARD CONSTRUCTION NOTES

N—1

NO SCALE

Revisions	Appd.	Date
1. Added On 10/30/01		

LOS OSOS COMMUNITY SERVICES DISTRICT

ENGINEER'S IMPROVEMENT CERTIFICATION

I, _____, R.C.E. Number _____,

hereby certify that I have reviewed the improvements shown on the Improvement Plans titled _____, prepared by _____, and approved by the Los Osos Community Services District on _____, and that said improvements were constructed at the horizontal and vertical alignment, and in substantial conformance with those approved plans and the Standard Specifications and Drawings of the Los Osos Community Services District, or with those approved changes shown on the Record Drawings prepared by me and dated _____.

ENGINEER OF RECORD

_____

Signed Seal

This Certification in no way relieves any party of any responsibility or obligations he or she has accepted by Contract or Custom.

APPROVED BY THE DISTRICT ENGINEER DATE

LOS OSOS COMMUNITY SERVICES DISTRICT STANDARD DRAWING	
ENGINEER'S CERTIFICATION	N-3
	NO SCALE