San Luis Obispo County

LOS OSOS WATER RECYCLING FACILITY
BASIS OF DESIGN REPORT

FINAL

October 2012

October 15, 2012

10540 TALBERT AVENUE, SUITE 200 EAST • FOUNTAIN VALLEY, CALIFORNIA 92708 • P. 714.593.5100 • F. 714.593.5101

San Luis Obispo County

Los Osos Water Recycling Facility
Basis of Design Report

TABLE OF CONTENTS

Page No.

CHAPTER 1 - PROJECT SUMMARY 1-1

1.1 PURPOSE 1-1
1.2 BACKGROUND 1-1
1.3 FACILITY OVERVIEW 1-2
1.4 PLANT DESIGN CRITERIA 1-2
1.4.1 Influent Flows and Loads 1-11
1.4.2 Effluent Discharge Limits 1-11
1.4.3 Odor Limits 1-12
1.5 PROCESS MODELING 1-13
1.6 SUMMARY OF PROJECT ELEMENTS 1-13
1.6.1 Preliminary Treatment 1-13
1.6.2 Secondary Treatment 1-14
1.6.3 Tertiary Treatment 1-21
1.6.4 Effluent Pumping and Storage 1-22
1.6.5 Solids Handling 1-22
1.6.6 Electrical, Instrumentation and Control Systems 1-39
1.6.7 Support Facilities 1-39
1.7 CONSTRAINTS AND ISSUES 1-40
1.7.1 Facility Siting 1-40
1.7.2 Site Conditions 1-43
1.7.3 Facility Layout Considerations 1-43
1.7.4 Access from Los Osos Valley Road 1-44
1.7.5 Permit Requirements 1-44

CHAPTER 2 - PRELIMINARY TREATMENT 2-1

2.1 PURPOSE 2-1
2.2 PROCESS OVERVIEW 2-1
2.3 DESIGN CRITERIA 2-1
2.3.1 Specific Design Criteria 2-2
2.3.2 Design Considerations 2-15
2.4 LAYOUT 2-17
2.5 CONTROL NARRATIVES 2-17
2.5.1 Influent Metering and Sampling 2-17
2.5.2 Influent Screening 2-17
2.5.3 Screenings Handling 2-17
2.5.4 Septage Receiving 2-18
2.5.5 Odor Control 2-18
2.5.6 Plant Drain Pump Station 2-18
2.6 UTILITIES 2-18
2.6.1 Utility Water 2-29
2.6.2 Potable Water 2-29
2.6.3 Electricity 2-29

CHAPTER 3 - SECONDARY TREATMENT 3-1

3.1 PURPOSE 3-1
3.2 PROCESS OVERVIEW 3-1
3.2.1 Activated Sludge Process 3-1
3.2.2 Secondary Clarification 3-2
3.2.3 RAS/WAS Pump Station 3-2
3.3 DESIGN CRITERIA 3-2
3.3.1 Specific Design Criteria 3-7
3.3.2 Design Considerations 3-10
3.4 LAYOUT 3-12
3.4.1 Oxidation Ditches 3-12
3.4.2 Secondary Clarifiers 3-12
3.4.3 RAS/WAS Pump Station 3-17
3.5 CONTROL NARRATIVES 3-17
3.5.1 Oxidation Ditches 3-17
3.5.2 Secondary Clarifiers 3-17
3.5.3 RAS/WAS Pumping 3-18
3.6 UTILITIES 3-18
3.6.1 Utility Water 3-18
3.6.2 Electricity 3-18

CHAPTER 4 - TERTIARY TREATMENT 4-1

4.1 PURPOSE 4-1
4.2 PROCESS OVERVIEW 4-1
4.3 DESIGN CRITERIA 4-1
4.3.1 Specific Design Criteria 4-2
4.3.2 Design Considerations 4-15
4.4 LAYOUT 4-16
4.4.1 Coagulation 4-16
4.4.2 Filtration 4-16
4.4.3 Disinfection 4-16
4.4.4 Chemical Area 4-16
4.5 CONTROL NARRATIVES 4-21
4.5.1 Filter Influent Pumping 4-21
4.5.2 Coagulation 4-21
4.5.3 Filtration 4-22
4.5.4 Disinfection 4-23
4.5.5 Chlorination 4-24
4.6 UTILITIES 4-24
4.6.1 Utility Water 4-24
4.6.2 Potable Water 4-25
4.6.3 Electricity 4-25
4.7 FUTURE CONSIDERATIONS 4-25

CHAPTER 5 - EFFLUENT PUMPING AND HANDLING 5-1

5.1 PURPOSE 5-1
5.2 PROCESS OVERVIEW 5-1
5.3 SYSTEM DESCRIPTION 5-1
5.3.1 Distribution/Disposal System 5-2
5.3.2 Storage Pond(s) 5-7

5.3.3 Effluent Pump Station 5-7
5.3.4 Utility Water System 5-10
5.4 DESIGN CRITERIA 5-10
5.4.1 Specific Design Criteria 5-10
5.4.2 Design Considerations 5-12
5.5 LAYOUT 5-13
5.6 CONTROL NARRATIVES 5-14
5.6.1 Recycled Water Storage Pond(s) 5-14
5.6.2 Effluent Pump Station 5-14
5.7 FUTURE CONSIDERATIONS 5-19
5.7.1 Future Effluent Pumps 5-19
5.7.2 Off-Site Storage 5-19

CHAPTER 6 - SOLIDS HANDLING 6-1

6.1 PURPOSE 6-1
6.2 PROCESS OVERVIEW 6-1
6.3 DEWATERING ALTERNATIVES 6-2
6.3.1 Screw Presses 6-2
6.3.2 Belt Filter Presses 6-2
6.4 DESIGN CRITERIA 6-9
6.4.1 Specific Design Criteria 6-9
6.5 DESIGN CONSIDERATIONS 6-13
6.5.1 Layout 6-13
6.5.2 Decanting Operation Strategy 6-13
6.5.3 Selection of Dewatering Technology 6-13
6.6 LAYOUT 6-14
6.7 CONTROL NARRATIVES 6-14
6.7.1 Dewatering Feed Pumps 6-14
6.7.2 Dewatering Polymer System 6-21
6.7.3 Dewatering Units 6-21
6.7.4 Sludge Cake Conveyance and Storage 6-21
6.7.5 Aeration Blower System 6-22
6.8 UTILITIES 6-22
6.8.1 Utility Water 6-22
6.8.2 Potable Water 6-22
6.8.3 Electricity 6-22

CHAPTER 7 - ELECTRICAL, INSTRUMENTATION, AND CONTROL 7-1

7.1 PURPOSE 7-1
7.2 OVERVIEW 7-1
7.3 ELECTRICAL 7-2
7.3.1 Electrical Service 7-2
7.3.2 Power Distribution 7-2
7.3.3 Expansion 7-5
7.3.4 Standby Generation 7-5
7.3.5 Electrical Building 7-6
7.3.6 Underground Raceway Systems 7-6
7.3.7 Harmonics 7-7
7.3.8 Lighting 7-7
7.3.9 Grounding 7-8

7.3.10 Electrical Studies 7-8
7.3.11 Electrical Equipment Acceptance Testing 7-8
7.3.12 Design Criteria 7-9
7.4 INSTRUMENTATION AND CONTROL 7-12
7.4.1 Three-Tiered Control Concept 7-12
7.4.2 Process Control 7-14
7.5 FIELD WIRE TAGGING CONVENTION 7-16

CHAPTER 8 - STRUCTURAL AND ARCHITECTURAL 8-1

8.1 PURPOSE 8-1
8.2 CODES AND STANDARDS 8-1
8.2.1 Codes and Materials Standards 8-1
8.3 LOAD CRITERIA 8-3
8.3.1 Dead Loads 8-3
8.3.2 Live Loads 8-3
8.3.3 Seismic Design Criteria 8-4
8.3.4 Wind Design Criteria 8-5
8.3.5 Soil Load Criteria 8-6
8.3.6 Vibration 8-6
8.4 MATERIAL REQUIREMENTS 8-6
8.4.1 Reinforced Concrete 8-6
8.4.2 Masonry 8-7
8.4.3 Structural Steel 8-7
8.4.4 Light Gauge Steel 8-9
8.4.5 Aluminum 8-9
8.4.6 Wood Framing 8-9
8.4.7 Miscellaneous Materials 8-10
8.5 FOUNDATION SYSTEMS 8-10
8.6 ARCHITECTURAL DESIGN CRITERIA 8-10
8.6.1 Architectural Features 8-10
8.6.2 Building Heights 8-21
8.6.3 Energy Efficiency 8-21
8.6.4 Aesthetics 8-22

APPENDIX A – BIOTRAN CALCULATIONS
APPENDIX B – COASTAL DEVELOPMENT PERMIT FOR THE LOS OSOS WASTEWATER PROJECT (CDP A-3-SLO-09-055/069) AND RESPONSIBILITY MATRIX FOR PERMIT CONDITIONS
APPENDIX C – SCADA PRE-DESIGN TECHNICAL MEMORANDUM
APPENDIX D – PRELIMINARY EQUIPMENT LIST
APPENDIX E – PRELIMINARY GEOTECHNICAL REPORT LOS OSOS WASTEWATER PROJECT

LIST OF TABLES

Table 1.1 Influent Flows and Loads 1-11
Table 1.2 Discharge and Recycled Water Limits 1-12

Table 2.1 Design Criteria Summary – Preliminary Treatment 2-2

Table 2.2 Design Criteria Summary – Support Facilities 2-11

Table 3.1 Design Criteria Summary – Secondary Treatment 3-7

Table 4.1 Design Criteria Summary – Tertiary Treatment 4-2

Table 5.1 Annual Flow to Reuse/Disposal Sites 5-2
Table 5.2 Baseline Distribution Schedule 5-8
Table 5.3 Design Criteria Summary – Effluent Storage and Pumping 5-11

Table 6.1 Design Criteria Summary – Solids Handling 6-10

Table 7.1 Preliminary Load Analysis 7-5
Table 7.2 Preliminary Standby Generator Analysis 7-6
Table 7.3 Design Criteria Summary – Electrical, Instrumentation, and Control Codes 7-9
Table 7.4 Design Criteria Summary – Electrical Distribution Equipment 7-9
Table 7.5 Design Criteria Summary – Voltage Requirements 7-10
Table 7.6 Design Criteria Summary – Motors Greater Than 1 hp(1) 7-11
Table 7.7 Design Criteria Summary – Electrical Conduits and Wires 7-11
Table 7.8 Field Control Devices for Equipment 7-14

Table 8.1 Design Criteria Summary – Structural and Architectural Codes and Standards 8-1
Table 8.2 Design Criteria Summary – Live Loads 8-3
Table 8.3 Design Criteria Summary – Seismic Design Criteria 8-5
Table 8.4 Design Criteria Summary – Wind Design Criteria 8-5
Table 8.5 Design Criteria Summary – Reinforced Concrete 8-7
Table 8.6 Design Criteria Summary – Masonry 8-7
Table 8.7 Design Criteria Summary – Structural Steel 8-8
Table 8.8 Design Criteria Summary – Steel Protection Guidelines 8-8
Table 8.9 Design Criteria Summary – Light Gauge Steel 8-9
Table 8.10 Design Criteria Summary – Wood Framing 8-9
Table 8.11 Design Criteria Summary – Architectural 8-11
Table 8.12 Design Criteria Summary – Building Height Limits 8-21

LIST OF FIGURES

Figure 1.1 Vicinity Map 1-3
Figure 1.2 Plant Flow Schematic 1-5
Figure 1.3 Preliminary Hydraulic Profile 1-7
Figure 1.4 Overall Site Plan 1-9
Figure 1.5 Headworks Process Flow Diagram 1-15
Figure 1.6 Odor Control Facility Process Flow Diagram 1-17
Figure 1.7 Secondary Treatment Process Flow Diagram 1-19
Figure 1.8 Filter Influent Pump Station Process Flow Diagram 1-23
Figure 1.9 Tertiary Filtration Process Flow Diagram 1-25
Figure 1.10 Ultraviolet Disinfection Process Flow Diagram 1-27
Figure 1.11 Chemical Systems Process Flow Diagram 1-29
Figure 1.12 Effluent Storage and Pumping Process Flow Diagram 1-31

Figure 1.13 Effluent Distribution System Process Flow Diagram 1-33
Figure 1.14 Solids Handling Process Flow Diagram I 1-35
Figure 1.15 Solids Handling Process Flow Diagram II 1-37
Figure 1.16 Environmentally Sensitive Habitat Area in Giacomazzi 1-41

Figure 2.1 Site Plan 2-5
Figure 2.2 Headworks Process Flow Diagram 2-7
Figure 2.3 Odor Control System Process Flow Diagram 2-9
Figure 2.4 Support Facilities Process Flow Diagram 2-13
Figure 2.5 Headworks Conceptual Plan 2-19
Figure 2.6 Headworks Conceptual Section 2-21
Figure 2.7 Odor Control Facility – Conceptual Plan 2-23
Figure 2.8 Odor Control Facility – Conceptual Section 2-25
Figure 2.9 Plant Drain Pump Station 2-27

Figure 3.1 Site Plan 3-3
Figure 3.2 Secondary Treatment Process Flow Diagram 3-5
Figure 3.3 Carrousel® Oxidation Ditch Layout 3-13
Figure 3.4 Secondary Clarifier Layout 3-15
Figure 3.5 RAS/WAS Pump Station Layout 3-19

Figure 4.1 Filter Influent Pump Station Process Flow Diagram 4-7
Figure 4.2 Tertiary Filter Process Flow Diagram 4-9
Figure 4.3 Ultraviolet Disinfection Process Flow Diagram 4-11
Figure 4.4 Chemical Metering Process Flow Diagram 4-13
Figure 4.5 Tertiary Filter Plan and Section 4-17
Figure 4.6 UV Disinfection Plan and Section 4-19

Figure 5.1 Effluent Pumping Process Flow Diagram 5-3
Figure 5.2 Distribution System Schematic 5-5
Figure 5.3 Effluent Pump Station - Plan 5-15
Figure 5.4 Effluent Pump Station - Section 5-17

Figure 6.1 Site Plan 6-3
Figure 6.2 Solids Handling Process Flow Diagram I 6-5
Figure 6.3 Solids Handling Process Flow Diagram II 6-7
Figure 6.4 Dewatering Building Plan 6-15
Figure 6.5 Dewatering Building Section 6-17
Figure 6.6 Cake Hauling Truck Route 6-19

Figure 7.1 SCADA Configuration 7-3

Figure 8.1 Administration Building Rendering 8-15
Figure 8.2 Maintenance Building Rendering 8-17
Figure 8.3 Dewatering Building Rendering 8-19

PROJECT SUMMARY

1.1 PURPOSE

The intent of this Basis of Design Report (BDR) is to summarize and document the findings of the preliminary design efforts being undertaken for the San Luis Obispo County's (County) proposed Los Osos Water Recycling Facility (LOWRF). Following preliminary design, the County plans to proceed with and complete the detailed design and construction of the LOWRF through a design-build (D/B) approach. This report is envisioned to be a part of the contract documents for the D/B project. As such, it establishes a preliminary basis for the design of the LOWRF and provides guidance and direction to the subsequent phases of the project.

The purpose of this particular chapter is to provide a summary of the necessary facilities at the LOWRF as well as to provide an overview of the major constraints and issues that should be addressed during the D/B phase of the project.

1.2 BACKGROUND

The community of Los Osos, California is an unincorporated community of approximately 14,500 residents situated about midway on the coastline of the County as shown on Figure 1.1.

The community's water is supplied entirely by its underlying groundwater. These groundwater resources are divided into an upper aquifer and a lower aquifer. Presently the lower aquifer is experiencing seawater intrusion while the upper aquifer shows signs of nitrate contamination.[1] The community relies on septic tanks for wastewater disposal, which provides mitigation for seawater intrusion, but contributes to nitrate contamination of the upper aquifer. Recent groundwater nitrate monitoring[2] of wells screened in the uppermost aquifer found that the concentration of nitrate exceeds the drinking water Maximum Contaminant Level (MCL) of 10 milligrams per liter (mg/L) as nitrate-N in 17 monitoring wells. Elevated levels ranged from 11 to 29 mg/L. Recognizing that septic tank discharge was contributing to high nitrate levels within the upper aquifer in 1983, the Regional Water Quality Control Board (RWQCB) issued Resolution 83-13, an amendment to its Basin Plan. This resolution prohibited waste discharge from septic tanks with leach fields and seepage pits within a Los Osos prohibition zone effective January 1, 1988, halting new construction or major expansions until the water pollution problem was solved. Resolution No. 83-13

1 *Cleath-Harris Geologists, Los Osos Groundwater Basin Update* Exhibit B, *May 2010.*

http://www.losososcsd.org/Library/Document%20Library/groundwaterbasinupdate5-4-2010[1].pdf

2 Cleath and Associates, Los Osos Groundwater Nitrate Monitoring Program, *November 2006.*

necessitated development of a community wastewater treatment system and set a timeline for design and construction of a treatment plant.[3]

The LOWRF will provide wastewater treatment and water recycling services to the approximately 12,500 Los Osos residents within the prohibition zone. The new infrastructure and ongoing operations will enable the community to comply with Resolution 83-13. The planned effluent reuse/disposal system will both reduce fresh water demand from the aquifer and return highly treated water back to the aquifer, both of which will help mitigate seawater intrusion.[4]

1.3 FACILITY OVERVIEW

The collection system that receives and delivers the wastewater flow to the LOWRF is currently under construction in a separate project referred to as the Los Osos Wastewater Collection System (LOWCS) project. The entire flow from the collection system to the plant is provided via a force main originating from the Mid-Town Pump Station.

The LOWRF will provide treatment and support facilities as well as associated development and infrastructure including electrical, instrumentation, and controls system.

Figure 1.2 is a simplified plant flow schematic of the anticipated treatment processes for the LOWRF and includes flow estimates for the various unit processes. As shown on the figure, the liquid-stream processes will consist of preliminary treatment (screening and screenings handling), secondary treatment (aeration and clarification), and tertiary treatment (chemical conditioning, filtration, and disinfection). Figure 1.3 is a preliminary hydraulic profile for the liquid stream facilities of the plant. The solids-stream processes will include solids storage, chemical conditioning, and dewatering. The solids treatment system will be designed to produce Sub-Class B solids. Odor control will be provided for sources of foul air in the liquid and solids streams. Figure 1.4 shows an overall site plan showing potential locations of the various facilities.

The LOWCS project will also install an effluent conveyance pipeline for the LOWRF. The pipeline will be used for recycled water distribution for both reuse and discharge to leach-fields.

1.4 PLANT DESIGN CRITERIA

This section summarizes the design criteria that have been established for the overall plant as part of the preliminary design development.

---

[3] Central Coast Regional Water Quality Control Board, *Resolution No. 83-13*, 1983.
[4] Carollo Engineers, Crawford, Multari and Clark Associates, and Cleath & Associates, *Viable Project Alternatives Fine Screening Analysis*, August 2007.

VICINITY MAP

FIGURE 1.1

86-SanLuisObispo9-12F1.1-8930A10.ai

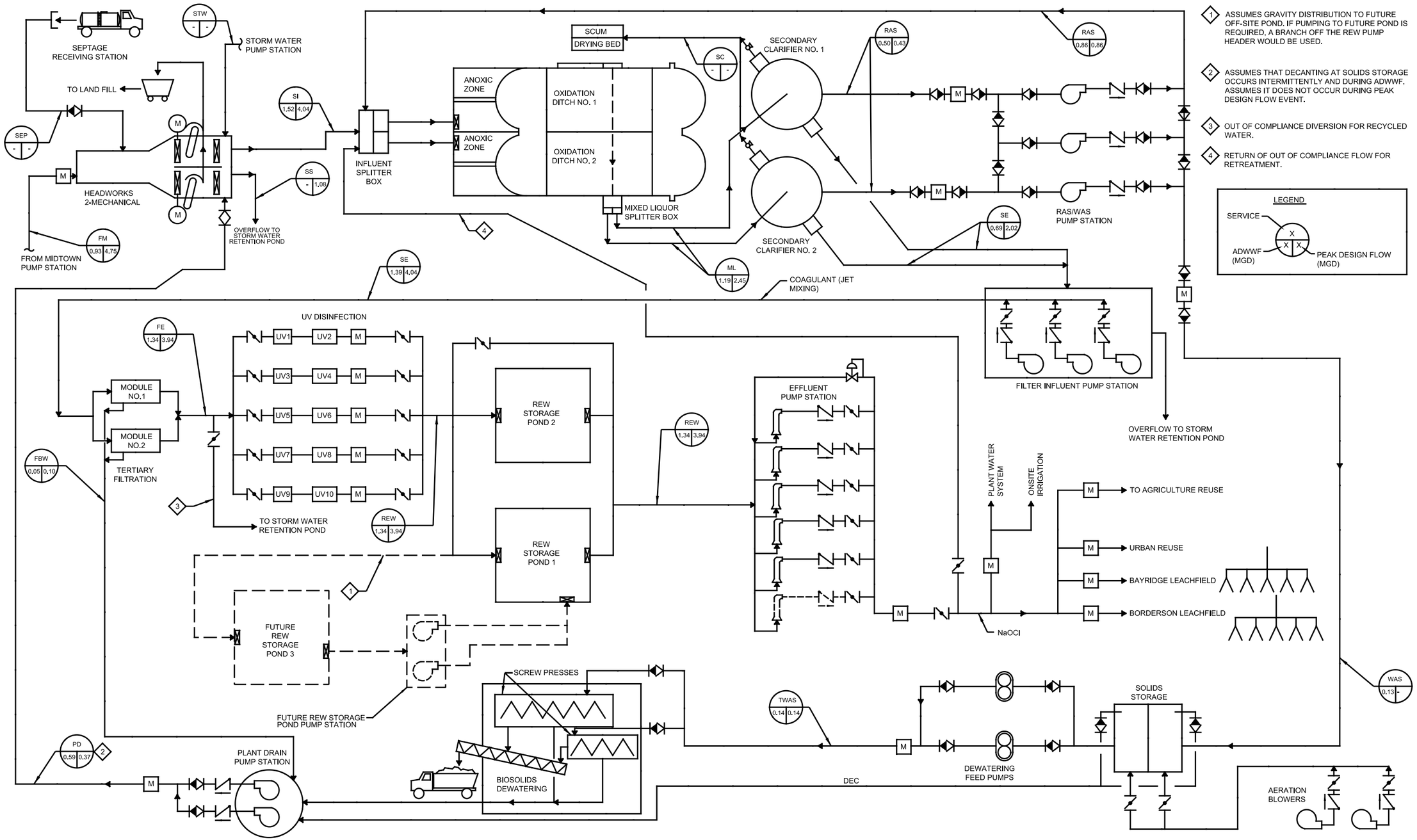

PLANT FLOW SCHEMATIC

FIGURE 1.2

86-SanLuisObispo9-12F1.2-8930A10.ai

carollo
Engineers...Working Wonders With Water™

COUNTY OF SAN LUIS OBISPO

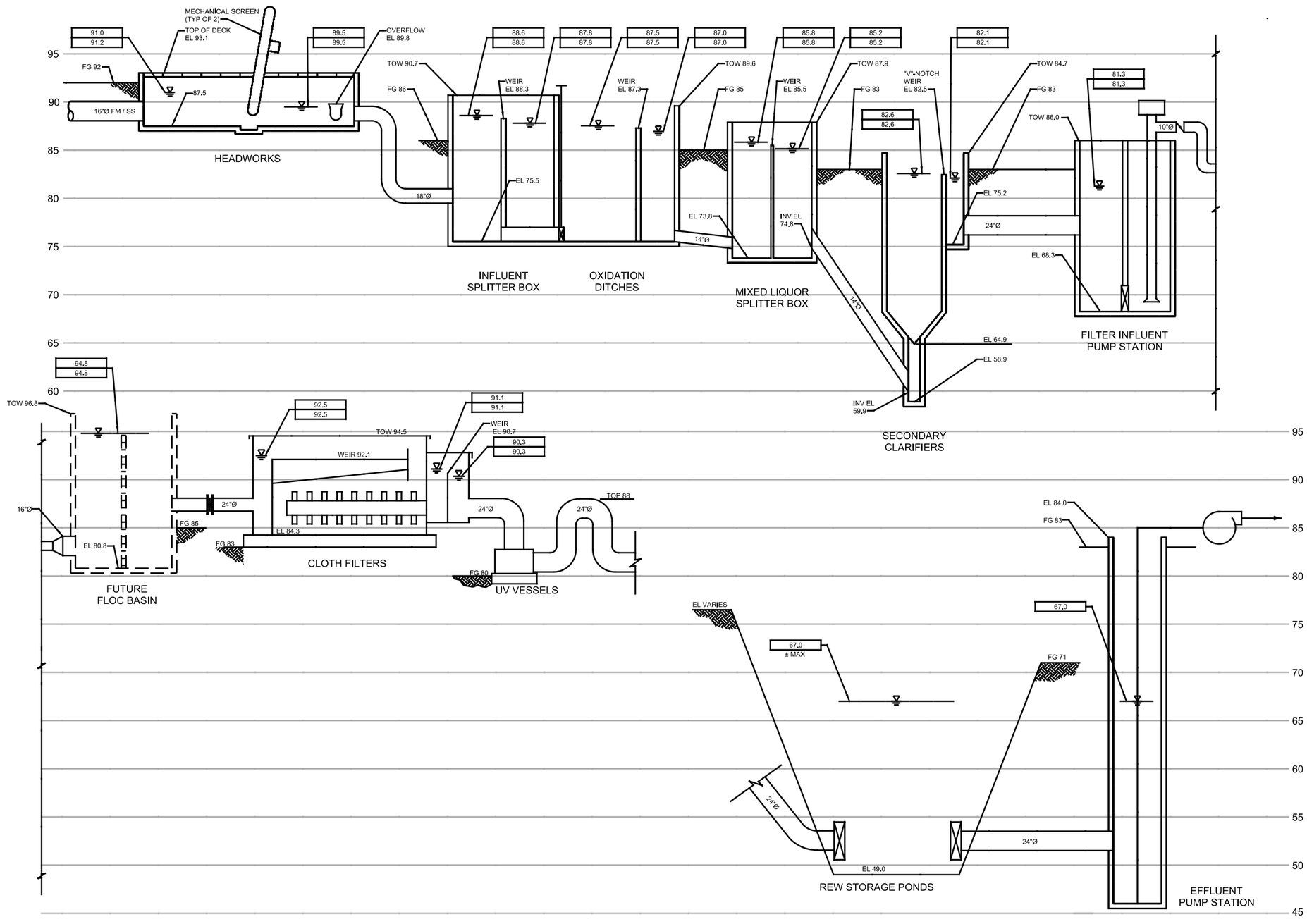

LEGEND

XX.X — W.S. EL @ DESIGN PEAK WET WEATHER FLOW OF 3.67 MGD PLUS RECYCLES (NOTES 1, 4, 5, 6)

XX.X — W.S. EL. @ MAXIMUM COLLECTION SYSTEM PUMP CAPACITY OF 4.75 MGD PLUS RECYCLES (NOTES 2, 3, 4, 5, 6)

TOW - TOP OF WALL
TOP - TOP OF PIPE

PRELIMINARY HYDRAULIC PROFILE

FIGURE 1.3

86-SanLuisObispo9-12F1.3-8930A10.ai

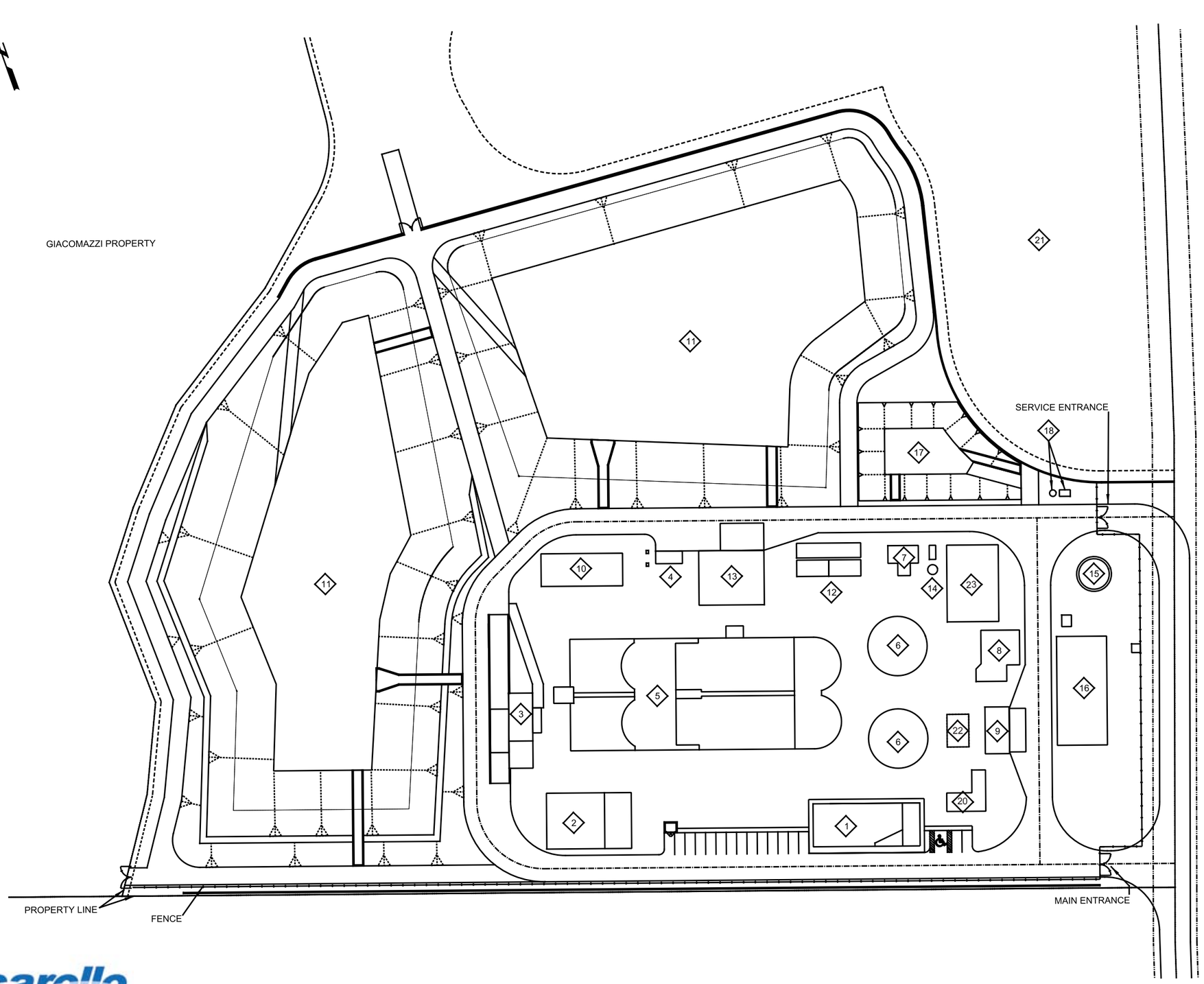

FACILITIES:

1. ADMINISTRATION BUILDING
2. MAINTENANCE BUILDING
3. INFLUENT METER VAULT/HEADWORKS/SEPTAGE RECEIVING
4. ODOR CONTROL FACILITY
5. OXIDATION DITCH
6. SECONDARY CLARIFIERS
7. RAS/WAS PUMP STATION
8. TERTIARY FACILITY
9. CHEMCIAL FACILITY
10. EFFLUENT PUMP STATION
11. REW STORAGE PONDS
12. SOLIDS STORAGE TANKS
13. DEWATERING BUILDING
14. PLANT DRAIN PUMP STATION
15. WATER STORAGE TANK
16. ELECTRICAL BUILDING
17. STORM WATER RETENTION POND
18. STORM WATER PUMP STATION
19. GROUNDWATER WELL
20. FILTER INFLUENT PUMP STATION
21. DESIGNATED ENVIRONMENTALLY SENSITIVE HABITAT AREA.
22. FUTURE FLOCCULATION BASIN
23. UV FACILITY

OVERALL SITE PLAN

FIGURE 1.4

86-SanLuisObispo9-12F1.4-8930A10.ai

carollo
Engineers...Working Wonders With Water™

COUNTY OF SAN LUIS OBISPO

1.4.1 Influent Flows and Loads

Table 1.1 presents the various influent flow rates and loads that are anticipated at the LOWRF. These values were inputs to Carollo Engineers' (Carollo's) process model developed for the LOWRF, which is described later in this chapter.

Table 1.1 Influent Flows and Loads San Luis Obispo County

Criteria	Unit	Year 2015[1]	Build-Out
Population	-	12,500	18,500
Influent Flow[2]	mgd		
Average Month Dry Weather (AMDW)		0.63	0.93
Maximum Month (MM)		0.93	1.23
Average Annual (AA)[3]		0.72	1.02
Maximum Day (MD)		1.46	1.83
Peak Wet Weather Flow (PWWF)		3.67[4]/4.75[5]	3.67[4]/4.75[5]
5-Day Biochemical Oxygen Demand (BOD) at MM[2]	ppd	2,500	3,700
Total Suspended Solids (TSS) at MM[2]	ppd	2,250	3,330
Nitrogen (as total N) at MM[2]	mg/L	56	56
Flow in Collection System	mgd		
Minimum Hour (MH)		0.13	0.19
Peak Dry Weather Flow		1.13	1.67

Notes:
(1) Year 2015 is the anticipated start-up of the LOWRF.
(2) The LOWRF is to include a septage receiving station. Since the receiving station will be designed for the septage hauled from the Los Osos community only, the planned septage flow and loads should be estimated accordingly.
(3) Based on 9 months of dry weather and 3 months of wet weather at the maximum month flow.
(4) Based on operating two constant-speed pumps simultaneously at the Mid-Town Pump Station.
(5) Based on operating three constant-speed pumps simultaneously at the Mid-Town Pump Station.

1.4.2 Effluent Discharge Limits

The LOWRF must be operated to comply with the conditions of its Waste Discharge/Recycled Water Requirements (WDR) (Order No. R3-2011-0001) issued by the California RWQCB in May 2011. The waste discharge requirements detailed in the WDR order include the recycled water requirements of the California Department of Public Health Code Title 22 for unrestricted reuse. During periods of low irrigation water demand, plant

effluent will not be used for irrigation and will be discharged to leach fields. The effluent requirements for recycled water use and discharge to the leach fields are summarized in Table 1.2.

Table 1.2 Discharge and Recycled Water Limits San Luis Obispo County

Constituent, units	Recycled Water Limits[1]		Leach Field Discharge Limits[1]	
	Monthly Mean	Maximum	Monthly Average (30-day)	Daily Maximum
BOD, 5-day (mg/L)	30	90	60	100
Suspended Solids (mg/L)	30	90	60	100
Settleable Solids (mg/L)	N/A	N/A	0.1	0.5
Total Nitrogen (as N) (mg/L)	N/A	N/A	7	10
pH	6.5 – 8.4		N/A	N/A
Total Coliform (MPN/100 mL)	Shall not exceed: • Median of 2.2 per last 7 days. • 23 in more than one sample in any 30-day period. • 240 in any single sample.		N/A	N/A
Turbidity (NTU)	Shall not exceed: • 2 NTU within a 24-hour period. • 5 NTU more than 5 percent of the time within a 24-hour period. • 10 NTU at any time.		N/A	N/A

Notes:
(1) Waste Discharge Requirements, Central Coast Regional Water Quality Control Board, May 2011.

Since the effluent from the treatment plant will be conveyed to both reuse and disposal sites in the same pipeline, the more stringent water quality requirements must be met including:

- Total Nitrogen Monthly Average limit of 7 mg/L.
- Total Nitrogen Maximum Day limit of 10 mg/L.
- California Title 22 standards for tertiary recycled water.

1.4.3 Odor Limits

In accordance with Condition 89 of the California Coastal Commission's Coastal Development Permit (CDP) A-3-SLO-09-055/069 issued for the Los Osos Wastewater project, the emission of nuisance odors that are perceptible at or beyond the property lines of the project site shall be prevented at the LOWRF. The design of the process facilities

shall include odor control and treatment provisions as required to ascertain effective compliance with this condition.

1.5 PROCESS MODELING

Carollo employs a customizable spreadsheet-based mathematical model, Biotran, to perform mass balances and evaluate design parameters and operating criteria for a treatment plant. As part of the preliminary design efforts, a Biotran process model was set up for the LOWRF, and an iterative process was used to optimize the size, configuration, and performance of the selected treatment processes. Biotran calculations for the LOWRF are presented in Appendix A.

During the D/B phase, the selected D/B team as the Engineer of Record shall develop and provide a mathematical basis for process sizes.

1.6 SUMMARY OF PROJECT ELEMENTS

This section highlights the necessary treatment and support facilities at the LOWRF identified in Chapters 2 through 8. For detailed information on design criteria or a control narrative associated with a particular process or equipment, refer to the appropriate chapter.

1.6.1 Preliminary Treatment

The preliminary treatment facilities will consist of a headworks and an odor control facility. The headworks, the most upstream process at the plant, protects downstream processes and equipment by removing coarse materials from the influent wastewater. The odor control facility will provide plant-wide treatment of foul air, addressing anticipated odor sources in liquid and solids streams. Figure 1.5 is the process flow diagram developed for the headworks. Similarly, Figure 1.6 represents the process flow diagram for the odor control facility.

The headworks will include the following equipment, devices, and features:

- An influent flowmeter
- An automatic influent sampler
- Septage receiving station
- Mechanical screens to remove coarse material from the influent wastewater
- Sluice gates for isolating screen channels
- Provisions for allowing the influent flow to bypass the screens upon high level
- Screenings compactors
- Foul air withdrawal for odor control

- Return point for plant drain system
- Possible return point for on-site storm water

The odor control facility will include the following equipment, devices, and features:

- Package odor control equipment
- Odor control fans
- Foul air collection ducting

1.6.2 Secondary Treatment

Secondary treatment provides biological treatment of the wastewater and reduces biochemical oxygen demand (BOD), total suspended solids (TSS), and nutrients in the water. The secondary treatment facilities will consist of an extended aeration process, secondary clarifiers, and a sludge pump station. Figure 1.7 is the process flow diagram for the secondary treatment facilities.

The extended aeration process will include the following equipment, devices, and features:

- Anoxic mixers
- Aeration equipment
- Dissolved oxygen sensors (for process control)
- Sluice gates for isolating channels or basins
- Provisions for removal of accumulated grit

The secondary clarifiers will include the following equipment, devices, and features:

- Clarifier rotating mechanisms
- Scum pumps with flexibility to discharge to a scum drying facility or to the solids process

The sludge pump station will include the following equipment, devices, and features:

- Return activated sludge (RAS) flowmeters
- RAS pumps
- Waste activated sludge (WAS) flowmeters
- WAS pumps
- Automated valves

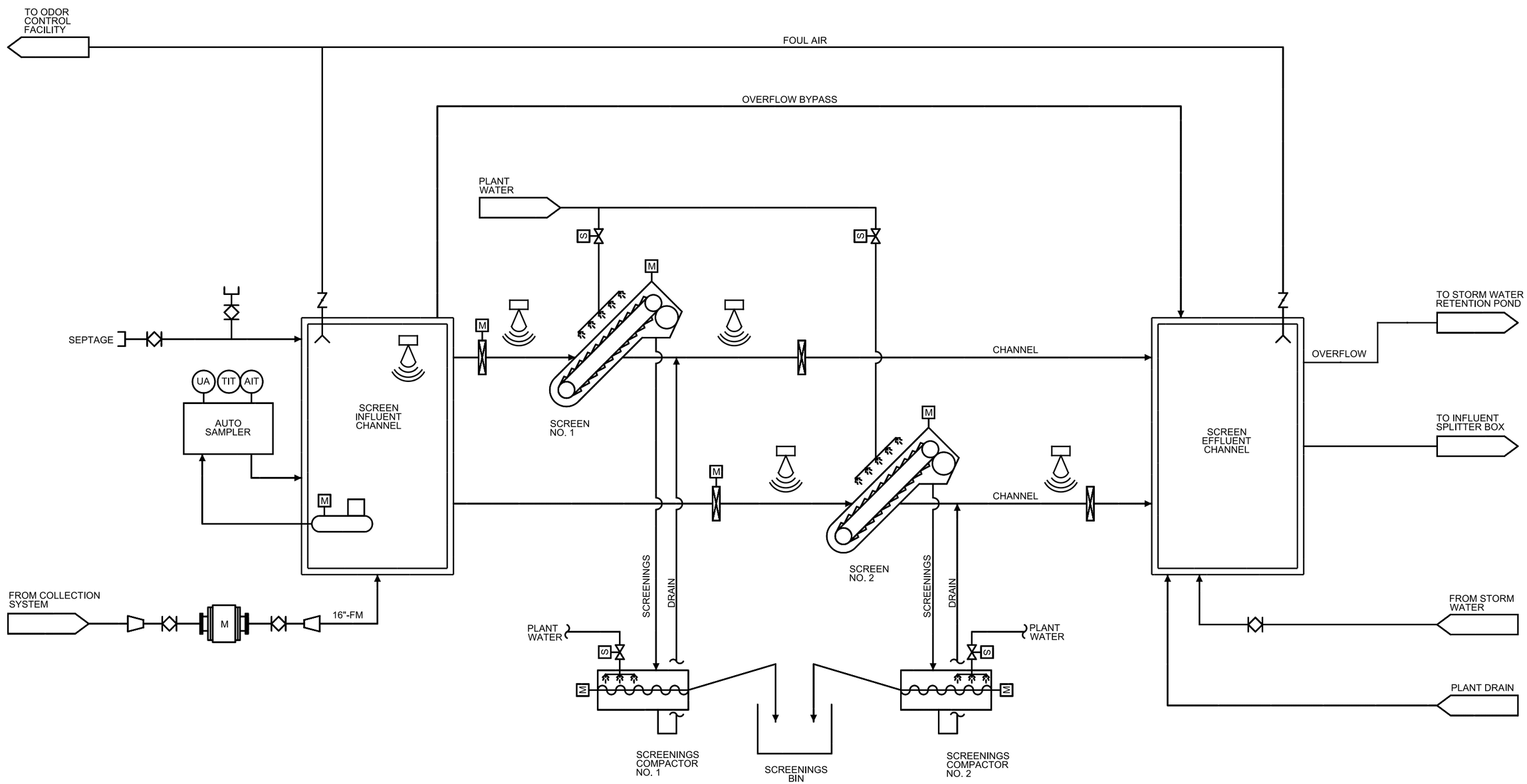

HEADWORKS

HEADWORKS PROCESS FLOW DIAGRAM

FIGURE 1.5

86-SanLuisObispo9-12F1.5-8930A10.ai

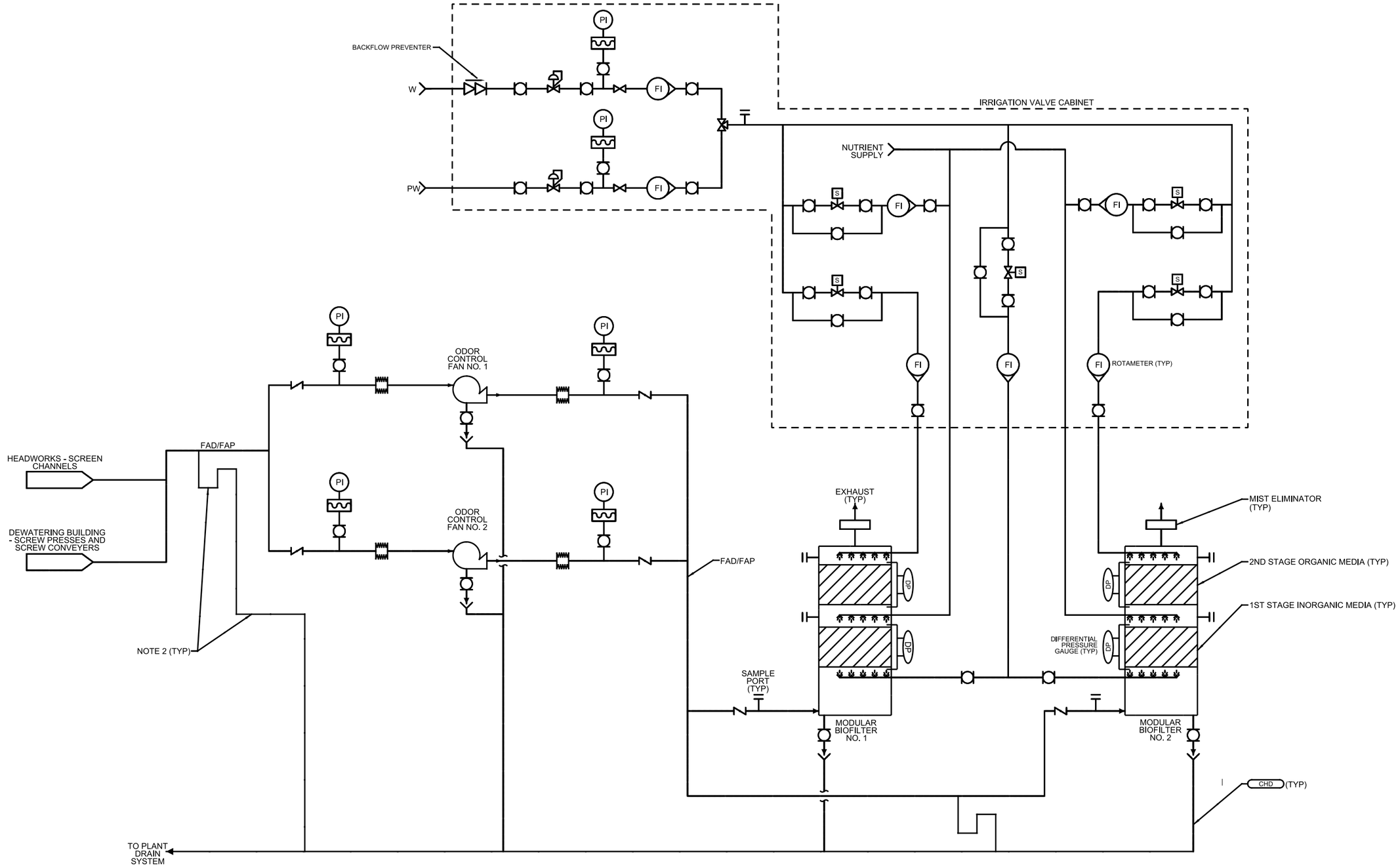

ODOR CONTROL FACILITY PROCESS FLOW DIAGRAM

FIGURE 1.6

86-SanLuisObispo9-12F1.6-8930A10.ai

carollo
Engineers...Working Wonders With Water™

COUNTY OF SAN LUIS OBISPO

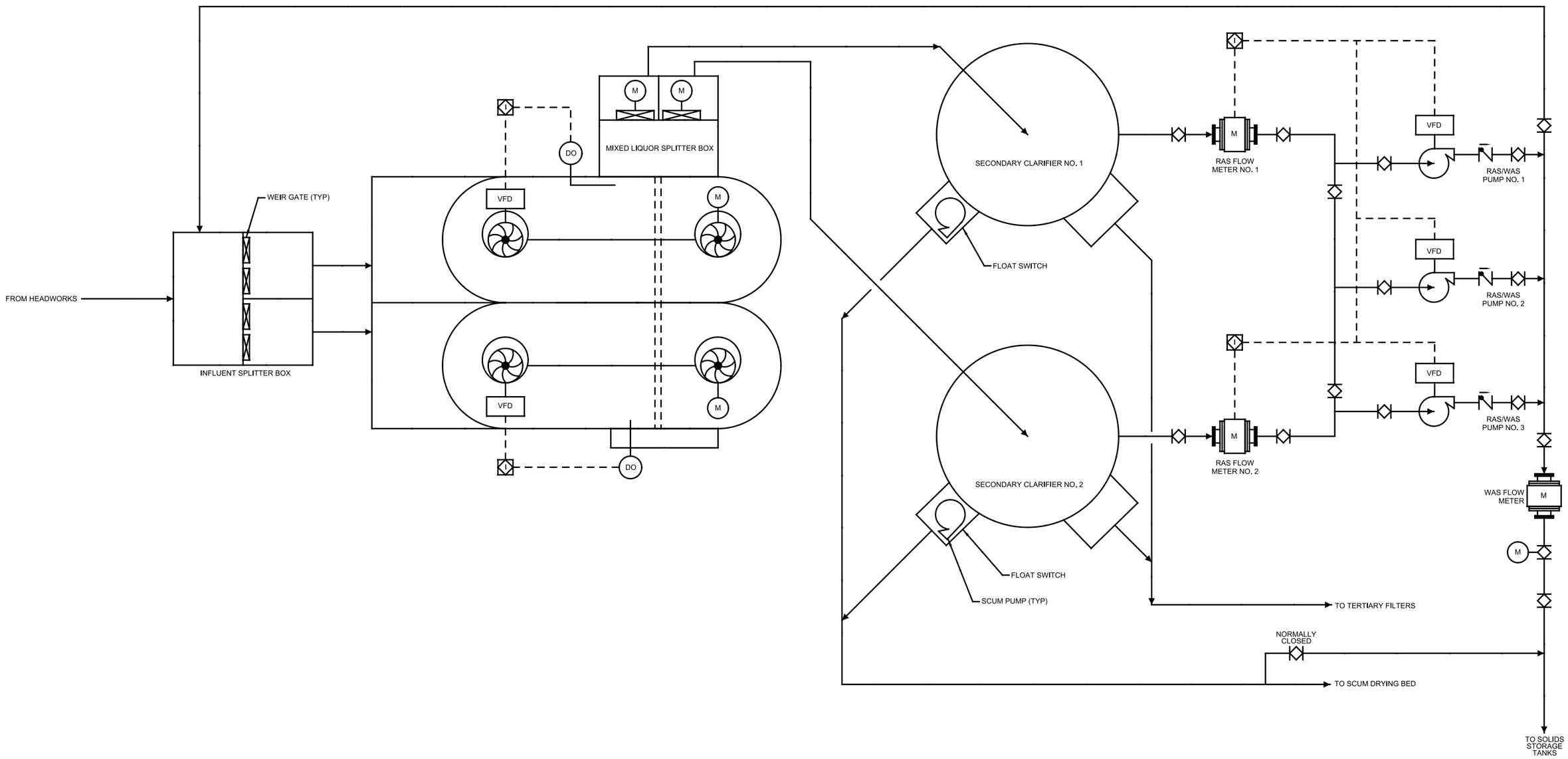

SECONDARY TREATMENT PROCESS FLOW DIAGRAM

FIGURE 1.7

86-SanLuisObispo9-12F1.7-8930A10.ai

carollo
Engineers...Working Wonders With Water™

1.6.3 Tertiary Treatment

Tertiary treatment enables the LOWRF to produce plant effluent that meets the California Water Recycling Criteria (Title 22). The tertiary treatment facilities will consist of filter influent pumping, pre-filtration chemical conditioning (coagulation), tertiary filters, ultraviolet (UV) disinfection, and a sodium hypochlorite system for chlorine residual control. Figure 1.8 is the process flow diagram for the filter influent pump station. Similarly, Figure 1.9, Figure 1.10, and Figure 1.11 are the process flow diagrams for the tertiary filters, the UV system, and the chemical feed systems, respectively.

The filter influent pump station will include the following equipment, devices, and features:

- Submersible pumps equipped with variable frequency drives (VFDs)
- Coagulant injection point for pre-filtration chemical conditioning
- Flash mix pumps to achieve rapid chemical mixing
- Ability to route pump station overflow to the storm water retention pond
- Ability to supplement the process flow with plant water in order to sustain UV operation during periods of low or no influent flow

The tertiary filter facility will include the following equipment, devices, and features:

- Tertiary filter package consisting of filters, backwash pumps, automated valves, level instruments, and a control system
- Ability to automatically divert the flow when out-of-compliant water is produced
- Physical space and hydraulic flexibility to add flocculation basins in the future if needed
- Possible return point for on-site stormwater

The UV disinfection facility will include the following equipment, devices, and features:

- UV package consisting of UV reactors, UV sensors, and a control system
- Individual flowmeters and automated flow control valves to maintain desirable flow split between parallel trains
- An automatic effluent sampler

The tertiary chemical facility will have the following equipment, devices, and features:

- Chemical storage vessels (bulk storage and totes)
- Chemical metering pumps for coagulant
- Chemical metering pumps for sodium hypochlorite

1.6.4 Effluent Pumping and Storage

The effluent pumping and storage facilities will consist of a common effluent pump station and one or two on-site storage ponds. This pump station is intended to meet all effluent pumping needs of the LOWRF including providing on-site irrigation and utility water. Utility water is also referred to as plant water. Figure 1.12 is the process flow diagram for the effluent pumping and storage facilities. Figure 1.13 is the process flow diagram for the effluent distribution system.

The effluent pumping and storage facilities will include the following equipment, devices, and features:

- One or two on-site storage ponds
- Provisions for connection with future off-site storage pond(s)
- Effluent pumps equipped with VFDs
- Provisions for addition of future effluent pump(s)
- An effluent flowmeter
- A utility water flowmeter
- A pressure sustaining valve or a similar mechanism to meet low flow conditions (i.e., low demand)
- A sodium hypochlorite injection point to control chlorine residual in the effluent distribution system
- A chlorine residual analyzer

1.6.5 Solids Handling

The solids facilities will consist of sludge storage tanks, a sludge dewatering system, a dewatered cake conveyance system. Figure 1.14 and Figure 1.15 are the process flow diagrams for the solids handling facilities.

The sludge storage tanks will include the following equipment, devices, and features:

- Two sludge storage tanks
- Aeration equipment and diffuser system (used for oxygenation and for mixing)
- Provisions for in-tank thickening and decanting to increase the sludge concentration prior to dewatering

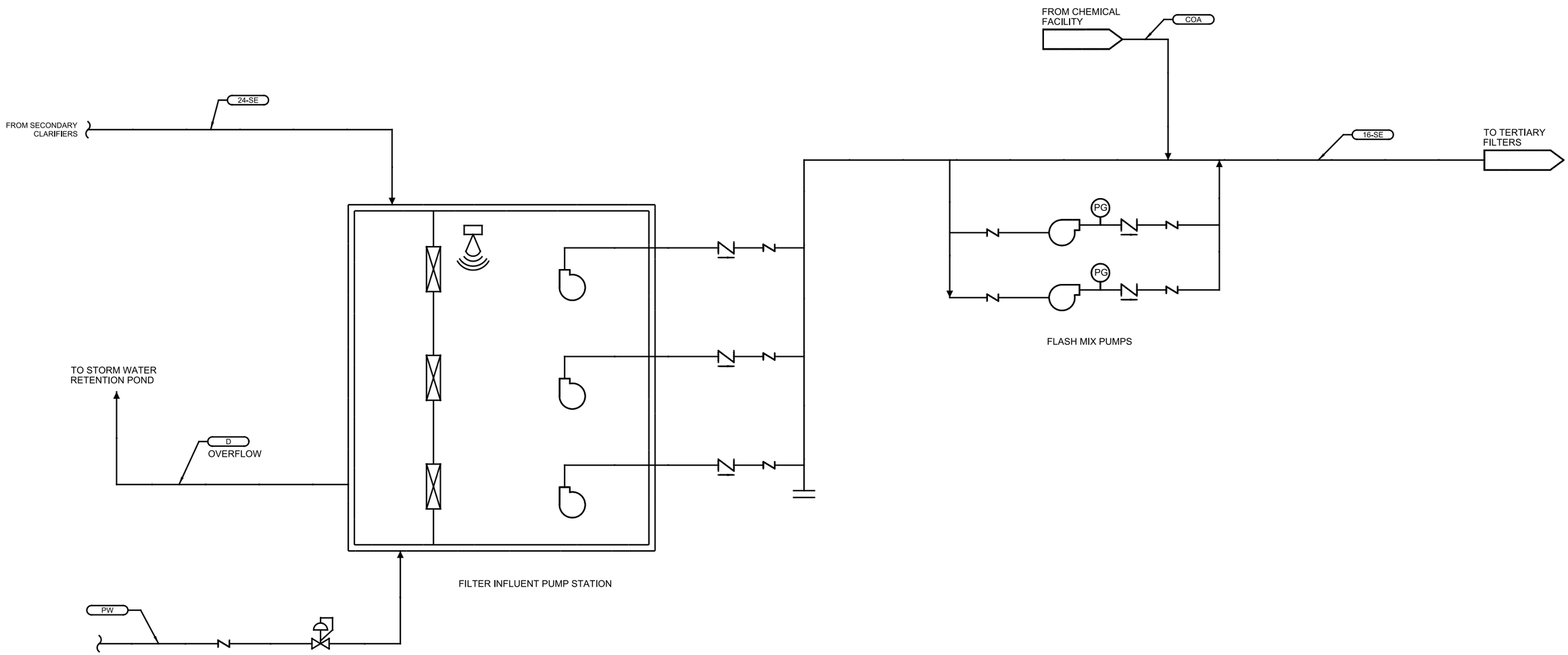

FILTER INFLUENT PUMP STATION PROCESS FLOW DIAGRAM

FIGURE 1.8

86-SanLuisObispo9-12F1.8-8930A10.ai

carollo
Engineers...Working Wonders With Water™

COUNTY OF SAN LUIS OBISPO

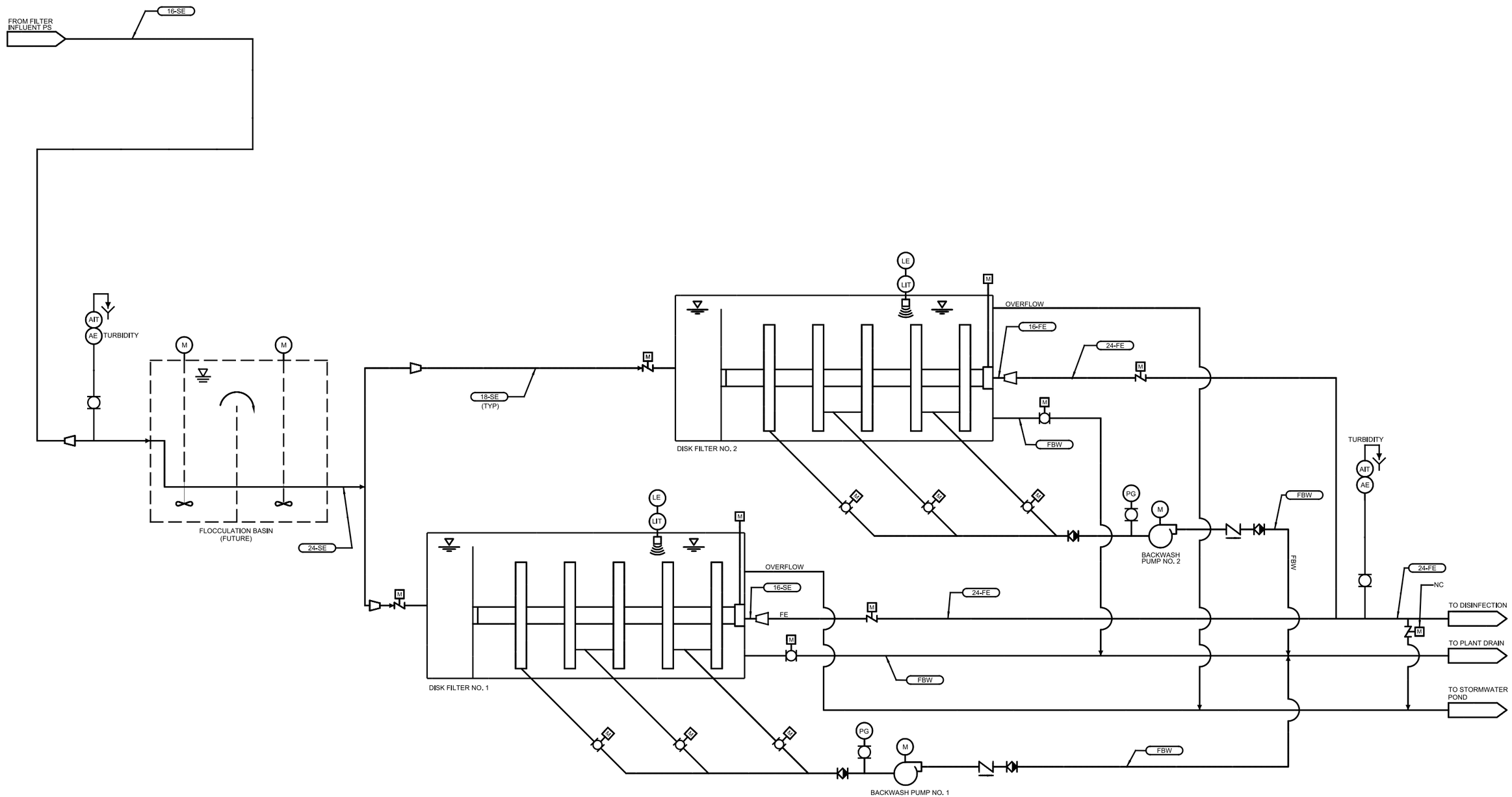

TERTIARY FILTRATION PROCESS FLOW DIAGRAM

FIGURE 1.9

86-SanLuisObispo9-12F1.9-8930A10.ai

carollo
Engineers...Working Wonders With Water™

COUNTY OF SAN LUIS OBISPO

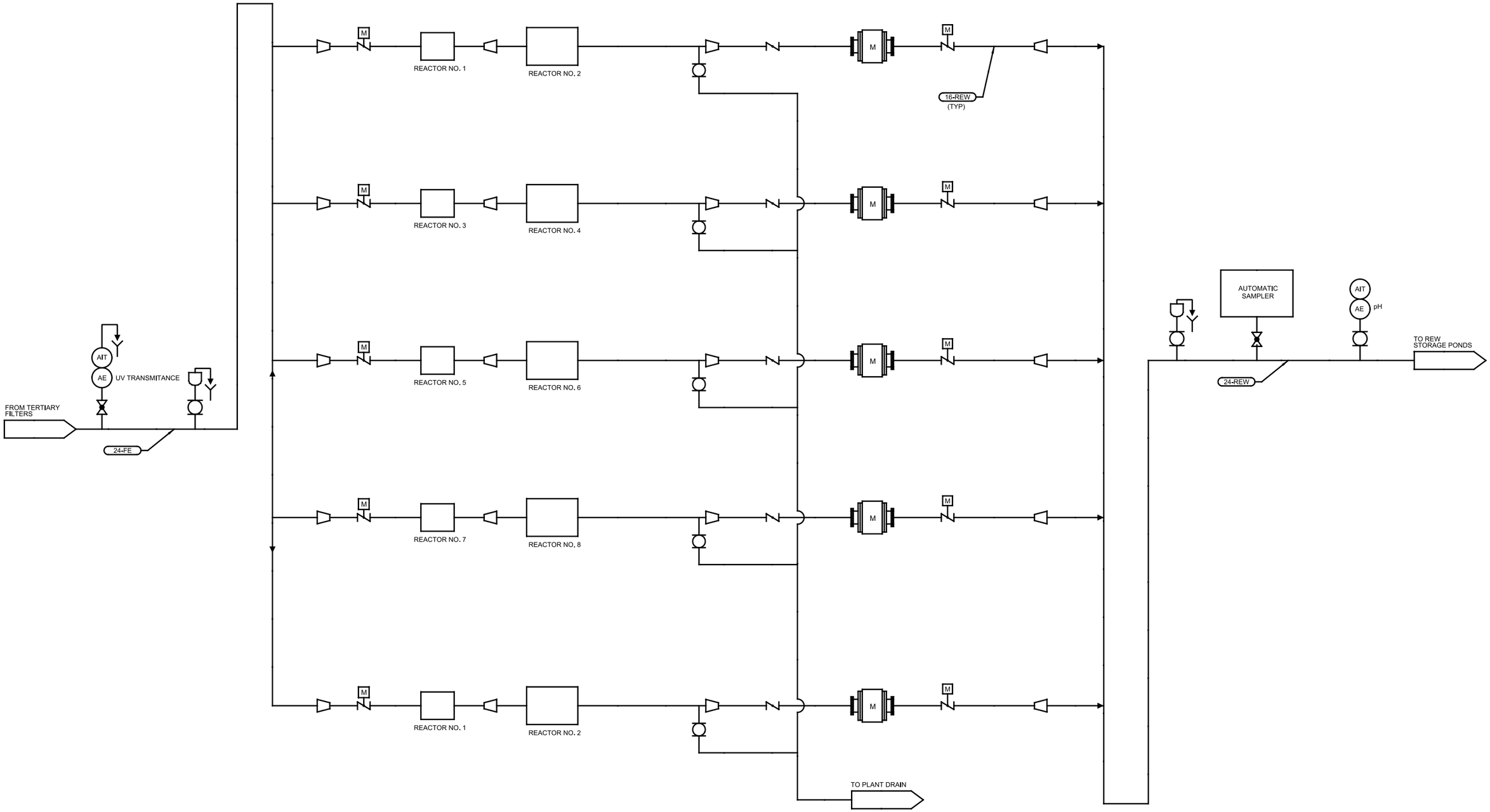

ULTRAVIOLET DISINFECTION PROCESS FLOW DIAGRAM

FIGURE 1.10

86-SanLuisObispo9-12F1.10-8930A10.ai

carollo
Engineers...Working Wonders With Water™

COUNTY OF SAN LUIS OBISPO

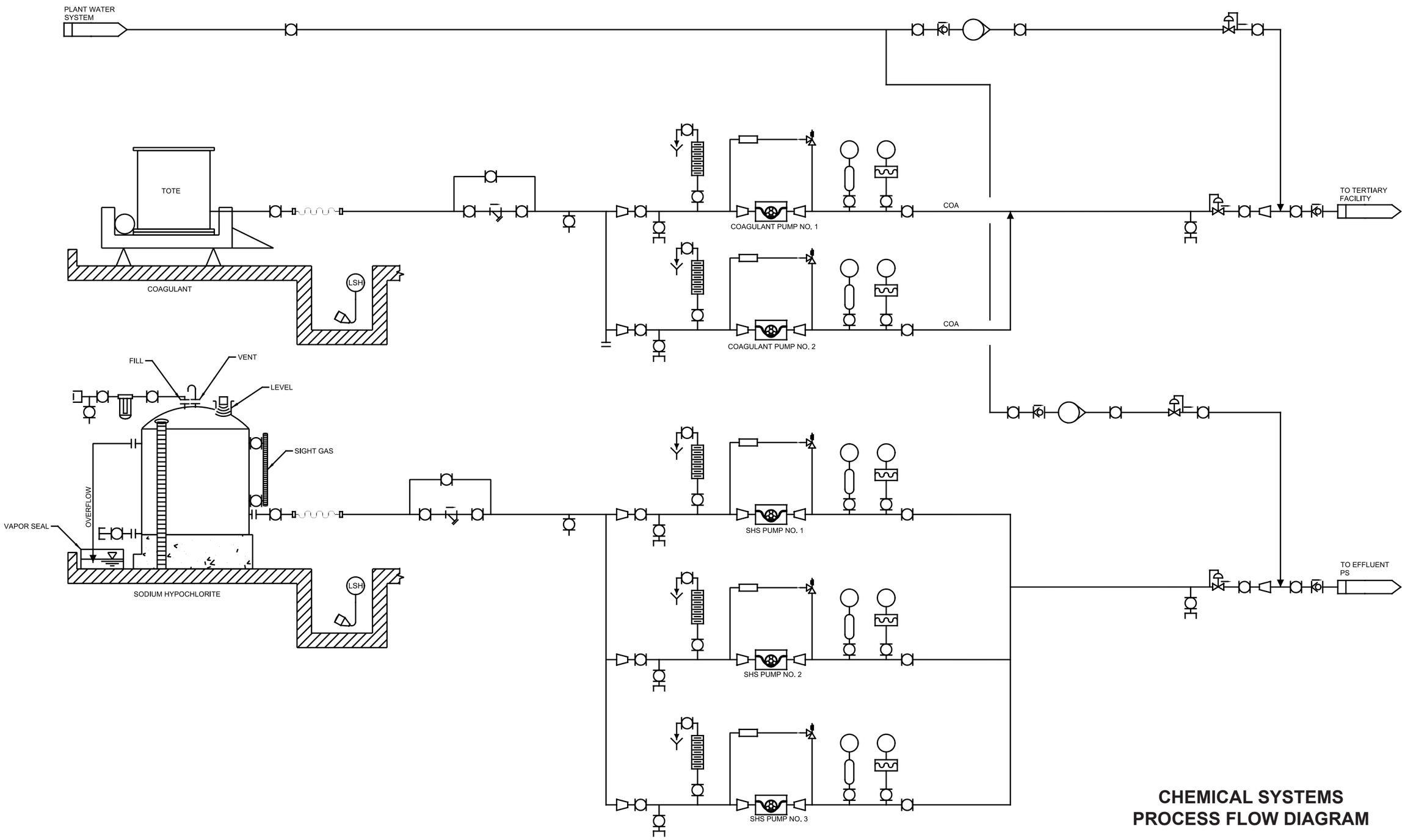

CHEMICAL SYSTEMS PROCESS FLOW DIAGRAM

FIGURE 1.11

86-SanLuisObispo9-12F1.11-8930A10.ai

carollo
Engineers...Working Wonders With Water™

COUNTY OF SAN LUIS OBISPO

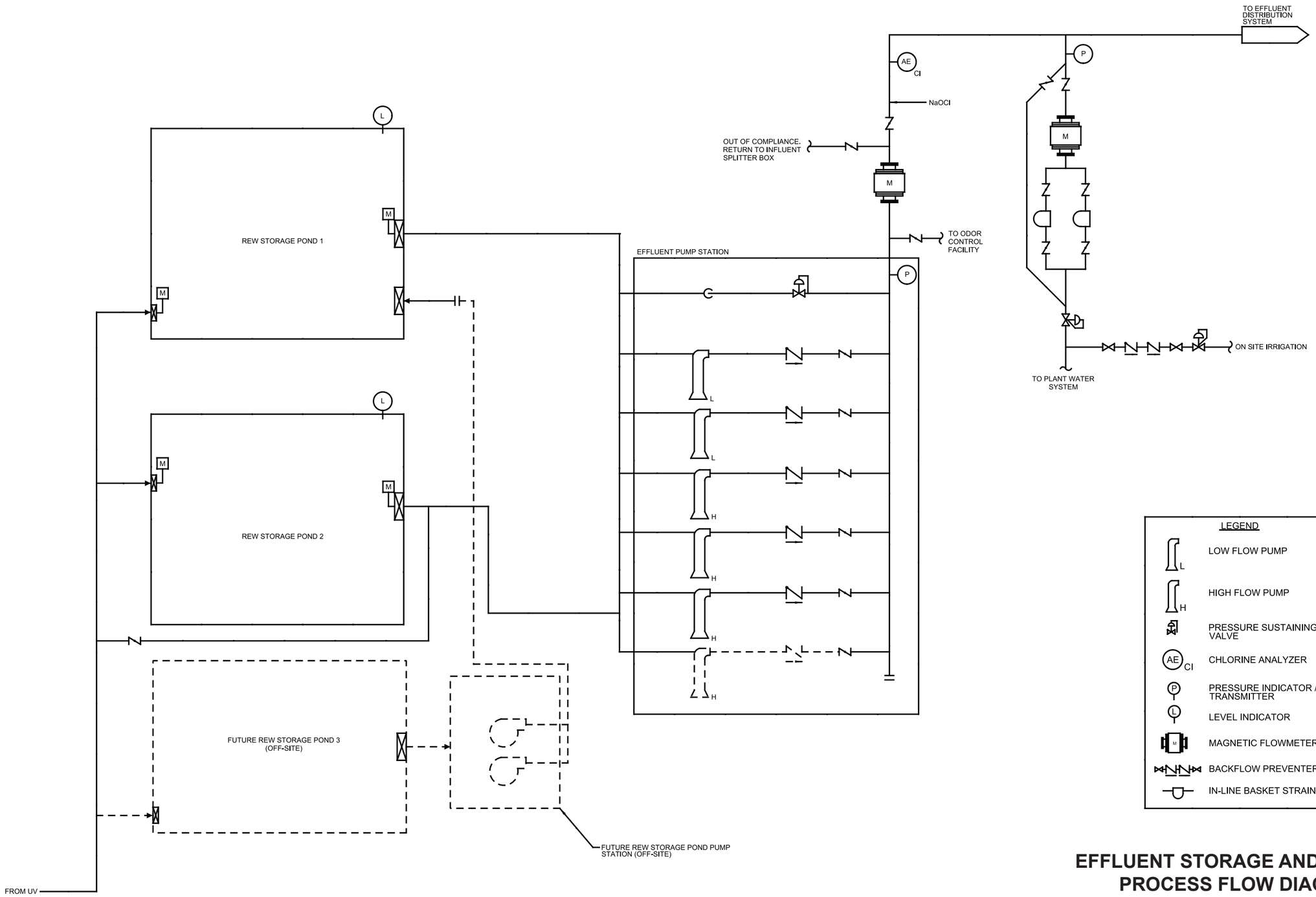

EFFLUENT STORAGE AND PUMPING PROCESS FLOW DIAGRAM

FIGURE 1.12

86-SanLuisObispo9-12F1.12-8930A10.ai

carollo
Engineers...Working Wonders With Water™

COUNTY OF SAN LUIS OBISPO

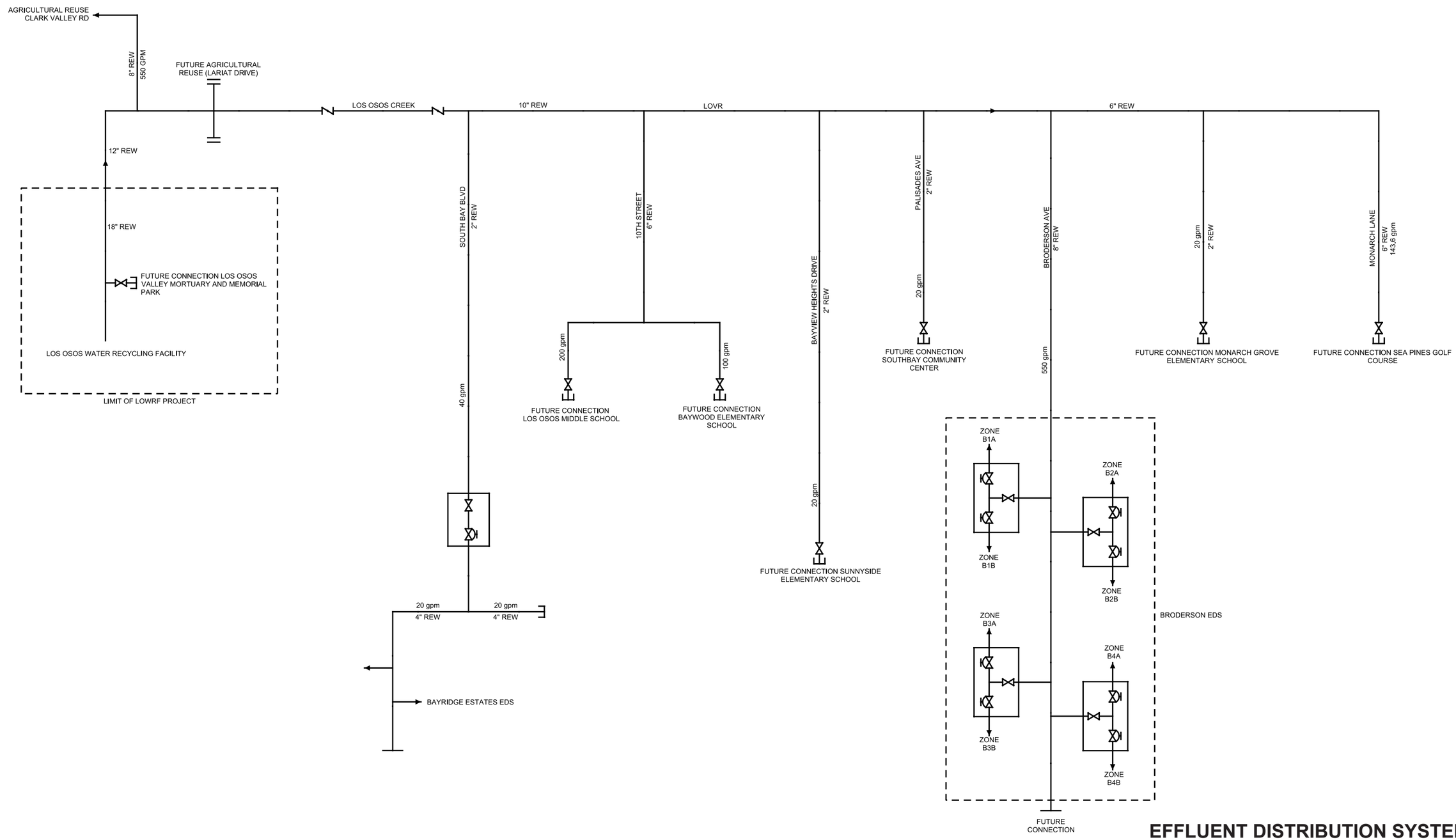

EFFLUENT DISTRIBUTION SYSTEM PROCESS FLOW DIAGRAM

FIGURE 1.13

86-SanLuisObispo9-12F1.13-8930A10.ai

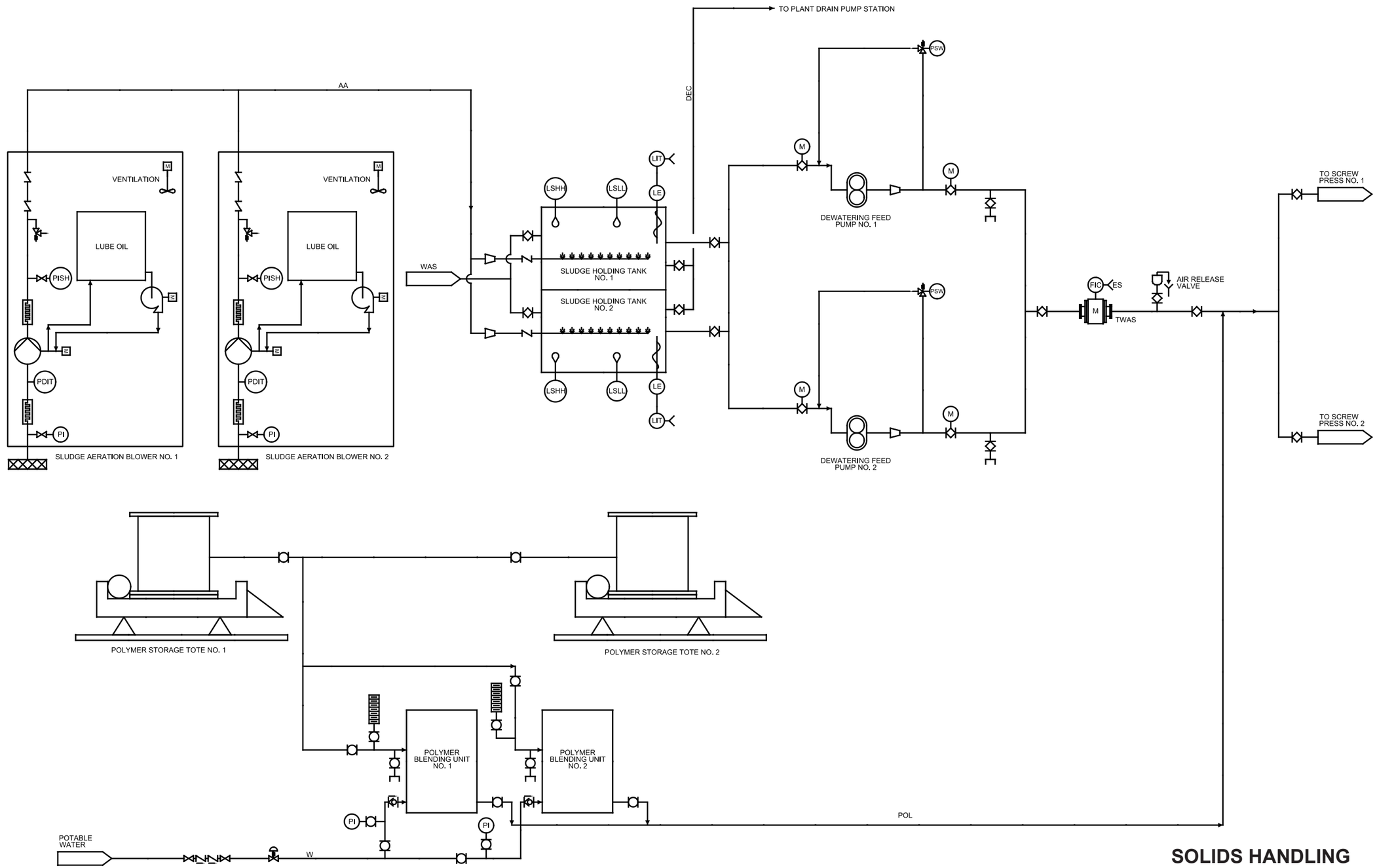

SOLIDS HANDLING PROCESS FLOW DIAGRAM I

FIGURE 1.14

86-SanLuisObispo9-12F1.14-8930A10.ai

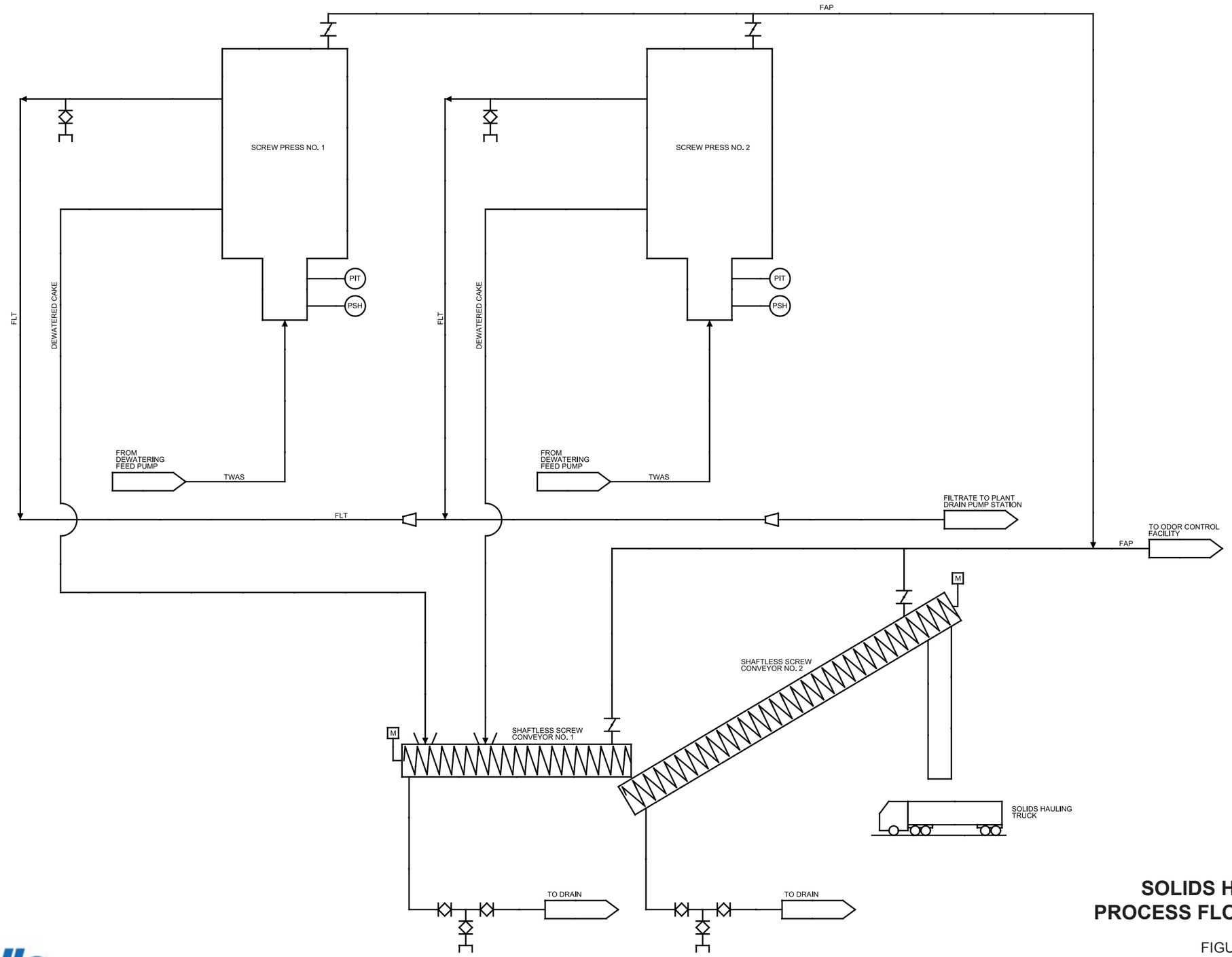

SOLIDS HANDLING PROCESS FLOW DIAGRAM II

FIGURE 1.15

86-SanLuisObispo9-12F1.15-8930A10.ai

carollo
Engineers...Working Wonders With Water™

COUNTY OF SAN LUIS OBISPO

The sludge dewatering system will include the following equipment, devices, and features:

- Dewatering feed pumps equipped with VFDs
- Polymer feed system for chemical conditioning of the dewatering feed sludge
- Mechanical dewatering equipment: belt filter presses or screw presses shall be considered and further evaluated by the D/B team
- Automated valves
- Foul air withdrawal for odor control

The dewatered cake system will include the following equipment, devices, and features:

- Conveyors for collection and transfer of dewatered cake
- Direct discharge to trucks for cake loading and hauling

1.6.6 Electrical, Instrumentation and Control Systems

The following highlights the key requirements identified for the electrical, instrumentation, and control systems at the LOWRF:

- Power distribution shall be configured as a 480-Volt, 3-Phase, 3-Wire system.
- One standby generator shall be provided. It is anticipated that 600-kW capacity will be needed.
- The Electrical Building shall house major electrical equipment and support the distribution of normal power and backup power.
- Supervisory control and data acquisition (SCADA) workstations at the LOWRF shall provide monitoring and control of the plant processes as well as of the remote facilities at the LOWCS.
- The LOWRF project shall use the same programmable logic controllers (PLCs) as the LOWCS project for standardization and to facilitate SCADA communication.
- The LOWRF project shall provide and install a remote computer station at the West Paso/Baywood Standby Power Building in the LOWCS.
- Two fiber optic networks from the LOWCS shall be extended from the intersection of Los Osos Valley Road and Clark Valley Road to the LOWRF.
- The Electrical Building at the LOWRF shall house the main PLCs and be the interface for the two fiber optic networks.

1.6.7 Support Facilities

The necessary support facilities at the LOWRF have been identified as follows:

- Administration Building including offices, laboratory, locker rooms, and restrooms. It also includes an area that houses SCADA equipment for monitoring and controlling the LOWRF and LOWCS facilities
- Maintenance Building including office space, restroom(s), and maintenance areas
- A plant drain system including a pump station
- A groundwater well pumping, storage, and distribution system for on-site potable water use including fire suppression supply water
- An engine-driven packaged fire pump system for fire suppression supply water
- A utility water distribution system
- An on-site stormwater retention pond and associated pumping system
- A scum drying facility.

1.7 CONSTRAINTS AND ISSUES

This section provides an overview of the major constraints and issues that have been identified relative to the design and construction of the LOWRF. They include existing site conditions, regulatory or permit requirements, and the County's standards.

1.7.1 Facility Siting

The LOWRF is to be located within an approximate 25-acre parcel of land known as the Giacomazzi property. It is located north of the Los Osos Valley Mortuary and Memorial Park off of Los Osos Valley Road, approximately 1 mile east of the community of Los Osos.

The Giacomazzi property includes approximately 8 acres of land that have been identified as environmentally sensitive habitat areas (ESHA) shown on Figure 1.16. Such areas are to be protected with a minimum 100-foot setback. This delineation effectively establishes new property lines to the east, west, and north. Additional setback space from the property line is required for locating the facilities and is as follows per the Coastal Zone Land Use Ordinance (CZLUO) of the County, Section 23.04.100:

- South boundary: 25 feet
- East, West, and North boundaries: 30 feet

It should be noted that it is permissible to use the easement space for constructing plant access roads and drainage channels/pipes. To maintain site security, the LOWRF should be enclosed with fence along the new property lines and should have motorized access gates. In addition to the plant entrance gates, a vehicular access gate should be provided at the southwestern corner to allow vehicle access to the property immediately west of the LOWRF.

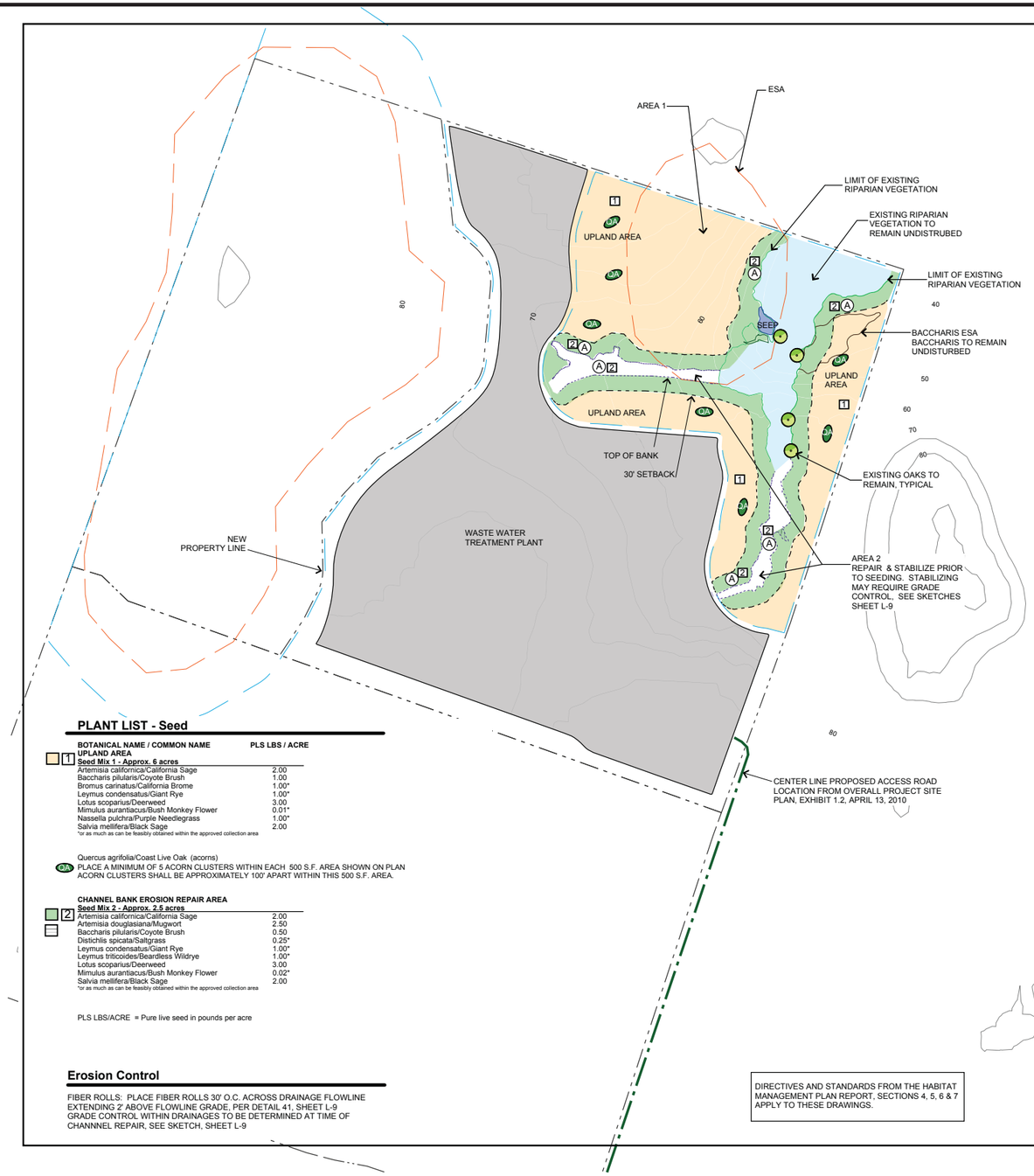

PLANT LIST - Containers

(A) CHANNEL BANK EROSION REPAIR AREAS & SETBACK AREA

ABBREV SHRUBS	QTY	SPACING	SIZE	BOTANICAL NAME/COMMON NAME	SOURCE
AC		3'o.c.	T	Artemisia californica/California Sage	Seed:collected
AD		3'o.c.	T	Artemisia douglasiana/Mugwort	Cutting:collected
BP		5'o.c.	T/1G	Baccharis pilularis/Coyote Brush	Seed/cutting:collected
RU		5'o.c.	T/1G	Rubus ursinus/California Blackberry	Cutting:collected
SM		6'o.c.	T/1G	Salvia melifera/Black Sage	Seed/cutting:collected

PLANT PLACEMENT SHALL OCCUR IN THE FIELD AFTER EROSION REPAIR.
ASSUME 30% DRAINAGE PLANTED (6,700 S.F.) AND 10% OF SETBACK PLANTED (8,100 S.F.). **INSTALL A MINMUM OF 870 CONTAINER PLANTS.**

T = Tree Bands
1G = one gallon

IRRIGATION & ESTABLISHMENT SEE TECHNICAL SPECIFICATIONS

PLANT LIST - Seed

BOTANICAL NAME / COMMON NAME	PLS LBS / ACRE
UPLAND AREA	
Seed Mix 1 - Approx. 6 acres	
Artemisia californica/California Sage	2.00
Baccharis pilularis/Coyote Brush	1.00
Bromus carinatus/California Brome	1.00*
Leymus condensatus/Giant Rye	1.00*
Lotus scoparius/Deerweed	3.00
Mimulus aurantiacus/Bush Monkey Flower	0.01*
Nassella pulchra/Purple Needlegrass	1.00*
Salvia melifera/Black Sage	2.00

*or as much as can be feasibly obtained within the approved collection area

Quercus agrifolia/Coast Live Oak (acorns)
PLACE A MINIMUM OF 5 ACORN CLUSTERS WITHIN EACH 500 S.F. AREA SHOWN ON PLAN ACORN CLUSTERS SHALL BE APPROXIMATELY 100' APART WITHIN THIS 500 S.F. AREA.

CHANNEL BANK EROSION REPAIR AREA	
Seed Mix 2 - Approx. 2.5 acres	
Artemisia californica/California Sage	2.00
Artemisia douglasiana/Mugwort	2.50
Baccharis pilularis/Coyote Brush	0.50
Distichlis spicata/Saltgrass	0.25*
Leymus condensatus/Giant Rye	1.00*
Leymus triticoides/Beardless Wildrye	1.00*
Lotus scoparius/Deerweed	3.00
Mimulus aurantiacus/Bush Monkey Flower	0.02*
Salvia melifera/Black Sage	2.00

*or as much as can be feasibly obtained within the approved collection area

PLS LBS/ACRE = Pure live seed in pounds per acre

Erosion Control

FIBER ROLLS: PLACE FIBER ROLLS 30' O.C. ACROSS DRAINAGE FLOWLINE EXTENDING 2' ABOVE FLOWLINE GRADE, PER DETAIL 41, SHEET L-9
GRADE CONTROL WITHIN DRAINAGES TO BE DETERMINED AT TIME OF CHANNNEL REPAIR, SEE SKETCH, SHEET L-9

DIRECTIVES AND STANDARDS FROM THE HABITAT MANAGEMENT PLAN REPORT, SECTIONS 4, 5, 6 & 7 APPLY TO THESE DRAWINGS.

North
Scale: 1" = 100'-0"
0 25' 50' 100' 200' 300' 400'

File Name: 1Firma/Los Osos Wastewater HMP (21035) Last Date Modified: 11/22/11

revision

Owner:
County of San Luis Obispo
Department of General Services
1087 Santa Rosa Street
San Luis Obispo, California

Project:
Los Osos Wastewater Project
Habitat Management Plan

Sheet Title:
Giacommazi Site
Planting Plan

firma
landscape architecture
design
environmental studies
ecological restoration
Principal: David W. Rorde ASLA
Registration No. 2117
187 Santa Barbara Street, Suite 203
San Luis Obispo CA 93401
805. 781. 9800 fax 805. 781. 9803

job no. 21035
plan check issue date: 5/12/11
bid set issue date:

SHEET 1 OF SHEETS

86-SanLuisObispo9-12F1.16-8930A10.ai

ENVIRONMENTALLY SENSITIVE HABITAT AREA IN GIACOMAZZI

FIGURE 1.16

carollo
Engineers...Working Wonders With Water™

1.7.2 Site Conditions

Although the topography over the majority of the site and vicinity is characterized by gently rolling hills, there exists a significant elevation variation within the Giacomazzi property. The elevations range from approximately 90 feet at the boundary with the Los Osos Mortuary and Memorial Park property to about 60 feet near the northern drainage channel on the northeastern side of the property. The site generally slopes in the northeastern direction.

There are two northeast trending drainages that cross the Giacomazzi property diagonally near the eastern edge of the property. They appear to be subject to erosion in an easterly direction. The erosion appears to be associated with concentrated runoff and has formed gullies approximately 2 to 6 feet deep along the eastern edge. At the new property lines, any runoff that would have otherwise entered the LOWRF should be intercepted, routed along the facility boundaries, and discharged to the natural receiving body. On-site stormwater should be collected, stored, and treated, independent of the runoff flow from the adjacent properties.

Based on a preliminary geotechnical assessment, the topsoil encountered at the site has a moderate to high potential for expansion. As a result, grading for structures will likely require removing the upper 3 to 5 feet of potentially expansive soils and replacing with non-expansive compacted fill. The D/B team should conduct a site-specific geotechnical investigation to confirm the expansive potential of the existing topsoil and determine the appropriate method of mitigation. Refer to Technical Memorandum (TM) Nos. 2 and 4 for additional requirements relative to the geotechnical investigation to be performed by the selected D/B team.

The preliminary geotechnical assessment also indicates that at the time of the field testing (May 8, 2007), groundwater was recorded at depths ranging from 30 to 48 feet below the existing ground surface. Further, based on published mapping, the Warden Lake area north of the property can be a marshy environment and has contained surface water in the past. Variations in surface and groundwater conditions will likely occur as a result of changes in precipitation, irrigation, runoff, and other factors. Since the deepest facility at the LOWRF will be the recycled water pond(s), and has a bottom elevation of approximately 49 (to be confirmed in final design), groundwater may be encountered during construction.

1.7.3 Facility Layout Considerations

During the D/B phase, the D/B team shall develop and optimize the layout of the LOWRF to comply with the following requirements:

- Locate the recycled water storage pond(s) such that they provide some screening of the process facilities when viewed from the west and the north.

- Orient the Administration and Maintenance Buildings (and other buildings as appropriate) to face the south in order to maximize the potential for solar power production in the future.
- Locate the Administration and Maintenance Buildings near the south property line to provide visual screening.
- Locate the odor control facilities away from the site boundaries to allow natural dilution of treated air.

1.7.4 Access from Los Osos Valley Road

This project shall construct a new access road from the intersection of Los Osos Valley Road and Clark Valley Road to the site. The required expansion and modifications to the intersection should be completed as part of this project and comply with the County's 2011 Public Improvement Standards. The intersection is to remain un-signaled. Refer to TM No. 2 for additional requirements.

1.7.5 Permit Requirements

In September 2010, the California Coastal Commission issued a CDP for the Los Osos Wastewater Project. This permit (CDP A-3-SLO-09-055/069), which is included in Appendix B, sets forth the conditions for the construction and operation of the LOWRF and the LOWCS. It is imperative that during the D/B phase of the LOWRF, the D/B project complies with the applicable conditions of this permit. A responsibility matrix that identifies the responsible entity for each permit condition is also included in Appendix B. The following highlights the key provisions of this permit that are relevant to the design and construction of the LOWRF.

- Special Condition 1a: All development shall be located within the development envelop and in accordance with the approved general configuration.
- Special Condition 1b: The site access road shall be located along the existing unpaved access road alignment extending from Los Osos Valley Road to the approved development envelop along the eastern property line of the Los Osos Mortuary and Memorial Park site.
- Special Condition 1c: The design and appearance of all development shall reflect a rural agricultural theme. Development shall be sited and designed so as to reduce its visibility from Los Osos Valley Road to the maximum extent feasible.
- Special Condition 1g: All interior lighting shall be located so as to minimize the potential for light and glare to be visible from within habitat areas. All exterior lighting shall be shielded and be of the lowest intensity feasible in order to avoid artificial light pollution.
- Special Condition 1h: The on-site landscaping and the associated irrigation system shall be designed in accordance with the specified requirements.

- Condition of Approval No. 6: Tertiary treatment shall be provided to meet Section 60301.230 of Title 22 of the California Code of Regulations, for unrestricted recycled water reuse.
- Condition of Approval No. 10: Prior to construction, an NPDES Construction Activity Stormwater Permit shall be obtained.
- Condition of Approval No. 11: Prior to construction, an approved Fire Safety Plan from Cal Fire shall be provided.
- Condition of Approval No. 12: Prior to initiating grading activities, a permit to operate portable engines or portable equipment shall be obtained.
- Condition of Approval No. 14: The project shall comply with the requirements of the National Pollutant Discharge Elimination System General Discharge, the Industrial Stormwater Program, and the County's Stormwater Pollution Control and Discharge Ordinance 3143.
- Condition of Approval No. 15: The building height as measured from the average native grade where the building is to be located shall not exceed the specified height limits.
- Condition of Approval No. 18: Buildings shall be designed to conform to energy efficiency requirements outlined in Title 24 of the California Code.
- Condition of Approval No. 22: All proposed facilities shall be designed and constructed in accordance with UBC Seismic Zone 4 regulations.
- Condition of Approval No. 23: Prior to the commencement of construction for buildings, the design shall be based on a facility-specific geotechnical report prepared by a California registered geotechnical engineer and professional geologist.
- Condition of Approval No. 27: Prior to completion of improvement and building plans for the proposed project, a design-level geotechnical report shall be prepared that addresses and reduces potential expansive soil impacts to less than significant.
- Condition of Approval No. 28: Avoidance of cultural resources is the paramount mitigation measure to protect cultural resources potentially impacted during project development. Avoidance of all known and unknown cultural resources shall be the primary and preferred mitigation.
- Condition of Approval No. 33: Prior to commencement of grading activities, the applicant shall submit driveway construction plans for the County's review and approval.
- Condition of Approval No. 35: Prior to commencement of grading activities, a Construction Activities Management Plan (CAMP) shall be submitted for review and approval of the San Luis Obispo Air Pollution Control Board (SLOAPCB). Construction staging areas shall be at least 1,000 feet away from sensitive receptors.

- Condition of Approval No. 38: Prior to commencement of grading activities, an updated air quality emissions analysis consistent with the CAMP and other mitigation measures shall be provided.
- Condition of Approval No. 41: The mechanical aeration system shall be located at a minimum of 250 feet away from the nearest residence.
- Condition of Approval No. 42: The standby generator shall be located at a minimum of 250 feet away from the nearest residence.
- Condition of Approval No. 50: A final lighting plan shall be prepared for the LOWRF facilities in accordance with Estero Area Plan AES-5.
- Condition of Approval No. 54: Construction staging areas shall conform to Estero Area Plan AES-1 and be located away from sensitive viewing areas to the extent possible.
- Condition of Approval No. 55: A final landscaping plan shall be prepared for the entire project site and approved by the County prior to commencement of construction activities.
- Condition of Approval No. 78: The project shall adhere to the specified noise attenuation requirements.
- Condition of Approval No. 89: The emission of nuisance odors that are perceptible at or beyond the property lines of the project site shall be prevented.
- Condition of Approval No. 91: Trees and shrubs shall be planted along the perimeter of the wastewater treatment facility to provide screening.
- Condition of Approval No. 100: The project shall provide a new on-site well for facility operations in accordance with California Well Standards and County Ordinances and to the satisfaction of the County's Environmental Heath Department.
- Condition of Approval No. 102: The facility layout shall be such that the structures have roofs with "due south orientation" to maximize solar orientation for future solar photovoltaic and/or solar water panel installation, as feasible.

PRELIMINARY TREATMENT

2.1 PURPOSE

The purpose of this chapter is to identify the necessary preliminary treatment and related support facilities at the San Luis Obispo County's (County) proposed Los Osos Water Recycling Facility (LOWRF) and present their preliminary design criteria. As such, it establishes a preliminary basis for the design and provides guidance and direction to the subsequent phases of this project.

2.2 PROCESS OVERVIEW

The collection system that receives and delivers the wastewater flow to the LOWRF is currently under construction as part of a separate project. The collection system includes a centralized lift station, named the Mid-Town Pump Station. The entire flow from the collection system to the plant is provided via a force main originating from the lift station.

The preliminary treatment system is intended to remove coarse materials from the influent wastewater in order to protect downstream equipment and processes as well as to improve the quality of the solids being generated. Such items can be rocks, rags, plastics, food wastes, organic matter, lumber, and other debris.

Figure 2.1 is the overall site plan developed as part of the preliminary design efforts. At the LOWRF, the preliminary treatment facilities will consist of a headworks and an odor control facility. The headworks includes an influent metering and sampling system, an influent screening system, a screenings handling system, and a septage receiving station. The odor control facility will provide plant-wide treatment of foul air, addressing the various anticipated odor sources. To improve treatment efficiency and mitigate high odor episodes, such sources will be contained, and the enclosed air spaces will be continuously ventilated to the centralized odor control facility for treatment.

The Headworks structure will include a septage receiving station. Since the receiving station will be designed for the septage hauled from the Los Osos community only, the planned septage flow and loads should be estimated accordingly.

The support facilities related to the preliminary treatment processes include a plant drain system and an on-site storm water retention facility. Each of these support facilities has a dedicated pump station. The desired discharge location for each of the two pump stations is the Headworks. A secondary discharge point for the storm water pump station will be provided upstream of the tertiary process.

2.3 DESIGN CRITERIA

Through the efforts completed to date as part of the preliminary design development and the preceding engineering tasks, a number of specific parameters and processes have been evaluated, vetted, and validated. The criteria listed in the subsequent tables are

identified as “fixed” criteria or a “baseline” design assumption. **The fixed criteria represent specific parameters that are not anticipated to be revised as design progresses, based on the evaluation and vetting efforts completed to date, without additional justification, or as a result of currently unforeseen changes.** As such, the design/build (D/B) team is expected to assume these criteria to be fixed through the remainder of the design phase efforts. However, it should be noted that some of the fixed criteria may be revisited if financial reasons dictate changes to the overall design (i.e., should the subsequent cost estimates exceed the project budget).

Other criteria are identified as “baseline” design assumptions, which represent the preliminary parameters used by Carollo as part of the initial design definition efforts but that are not specifically fixed at this point in the design process. These “baseline” criteria are expected to be further evaluated and adjusted by the D/B team and the County as design progresses. It is anticipated that innovation, value engineering, and general preferences by the D/B team may result in proposed variations to some of the baseline design assumptions presented herein.

2.3.1 Specific Design Criteria

Table 2.1 summarizes the design criteria of the preliminary treatment facilities that have been conceptualized to date. Figure 2.2 is the process flow diagram developed for the headworks. Similarly, Figure 2.3 is the process flow diagram for the odor control facility.

Table 2.1 Design Criteria Summary – Preliminary Treatment San Luis Obispo County

Design Parameter	Unit	Criterion/Value	Criteria Intention: “Fixed” Criteria for D/B Team	Criteria Intention: “Baseline” Design Assumption
HEADWORKS				
Influent Sampler				
Type	--	Automatic sampler with composite flow-pacing capability	X	
Number	--	1	X	
Influent Metering				
Type of meter	--	Magnetic	X	
Meter size (diameter)	inches	12		X
Flow range	mgd	2 to 4.75	X	
Accuracy rating, minimum	%	±1% of flow rate	X	
Influent Screening				
Type of screen	--	Step Screen		X
Peak design flow	mgd	4.75	X	
Number of units				
Duty	--	1	X	
Standby	--	1	X	
Total	--	2	X	
Channel width	feet	2		X

Table 2.1 Design Criteria Summary – Preliminary Treatment San Luis Obispo County

Design Parameter	Unit	Criterion/Value	Criteria Intention: "Fixed" Criteria for D/B Team	Criteria Intention: "Baseline" Design Assumption
Channel depth	feet	5.5		X
Approach velocity at peak design flow	fps	2	X	
Maximum solids passage	inches	0.25	X	
Angle of inclination	degrees with respect to horizontal	57		X
Maximum head loss at peak design flow				
Clean screen	inches	9	X	
30% blockage	inches	18	X	
Material of construction	--	Type 316 SS	X	
Screen cover	--	Required	X	
Screenings Handling				
Type of compactor	--	Compactor with shafted auger and sprayers		X
Number of units				
Duty	--	1	X	
Standby	--	1	X	
Total	--	2	X	
Auger outside diameter, minimum	inches	9	X	
Throughput capacity, no less than	cf/hr	90	X	
Minimum motor horsepower, each	HP	5	X	
Material of construction	--	Type 316 SS	X	
Manufacturer	--	Same as screen manufacturer	X	
Channel Isolation Gates				
Type	--	Fabricated Stainless Steel Sluice Gates	X	
Material of construction	--	Type 316 SS	X	
Number of units				
Screen inlet	--	2	X	
Screen outlet	--	2	X	
Automatic actuators				
Type	--	Motorized	X	
Screen inlet	--	Required	X	
Screen outlet	--	Not Required		X
Gate odor enclosures				
Material of construction	--	FRP	X	
Screen inlet	--	Required	X	
Screen outlet	--	Required	X	
Septage Receiving				
Discharge location	--	Common Influent Channel at Headworks downstream of influent sampling point	X	

Table 2.1 Design Criteria Summary – Preliminary Treatment San Luis Obispo County

Design Parameter	Unit	Criterion/Value	Criteria Intention: "Fixed" Criteria for D/B Team	Criteria Intention: "Baseline" Design Assumption
Discharge to headworks	--	By gravity	X	
Anticipated septage				
Frequency of delivery	Per work day	2 to 3		X
Volume, each delivery	gallons	2,500		X
ODOR CONTROL				
Type of technology	--	Modular Biofilter	X	
Number of stages	--	2	X	
Number of units				
Duty	--	1	X	
Redundant	--	1	X	
Standby	--	0		X
Total	--	2		X
Capacity of each unit				
Duty	total airflow %	75	X	
Redundant	total airflow %	75	X	
Type of media				
1st stage	--	Lava Rock (Inorganic)(1)	X	
2nd stage	--	Compost/Wood Chips (Organic)(1)	X	
Empty bed residence time				
1st stage	seconds	15(1)	X	
2nd stage	seconds	30(1)	X	
Tank material	--	FRP	X	
Water supply	--	Utility water with potable water backup	X	
Air change rates, min				
Bar screen channels at headworks	AC/Hr	12	X	
Screw presses and conveyers, enclosed volume	AC/Hr	12	X	
Fans				
Number of units				
Duty	--	1	X	
Standby	--	1	X	
Total	--	2	X	
Material of construction	--	FRP	X	

Notes:
(1) Based on typical inlet concentrations of H_2S and organic sulfur compounds found at preliminary treatment and solids handling facilities.
(2) Minimum motor size required to convey dewatered screenings over the desired length and discharge into a common screenings bin.

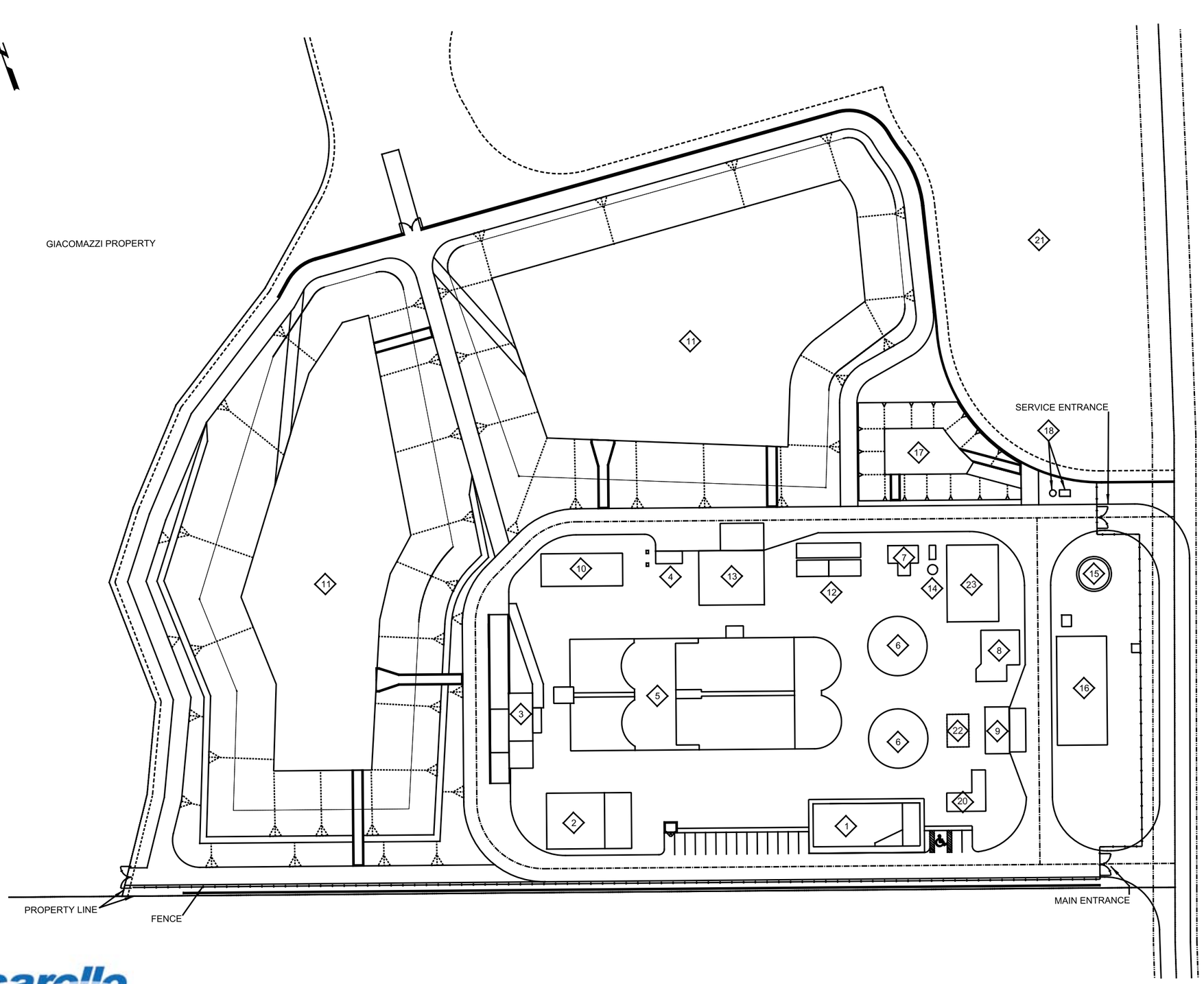

FACILITIES:

1. ADMINISTRATION BUILDING
2. MAINTENANCE BUILDING
3. INFLUENT METER VAULT/HEADWORKS/SEPTAGE RECEIVING
4. ODOR CONTROL FACILITY
5. OXIDATION DITCH
6. SECONDARY CLARIFIERS
7. RAS/WAS PUMP STATION
8. TERTIARY FACILITY
9. CHEMCIAL FACILITY
10. EFFLUENT PUMP STATION
11. REW STORAGE PONDS
12. SOLIDS STORAGE TANKS
13. DEWATERING BUILDING
14. PLANT DRAIN PUMP STATION
15. WATER STORAGE TANK
16. ELECTRICAL BUILDING
17. STORM WATER RETENTION POND
18. STORM WATER PUMP STATION
19. GROUNDWATER WELL
20. FILTER INFLUENT PUMP STATION
21. DESIGNATED ENVIRONMENTALLY SENSITIVE HABITAT AREA.
22. FUTURE FLOCCULATION BASIN
23. UV FACILITY

SITE PLAN

FIGURE 2.1

86-SanLuisObispo9-12F2.1-8930A10.ai

carollo
Engineers...Working Wonders With Water™

COUNTY OF SAN LUIS OBISPO

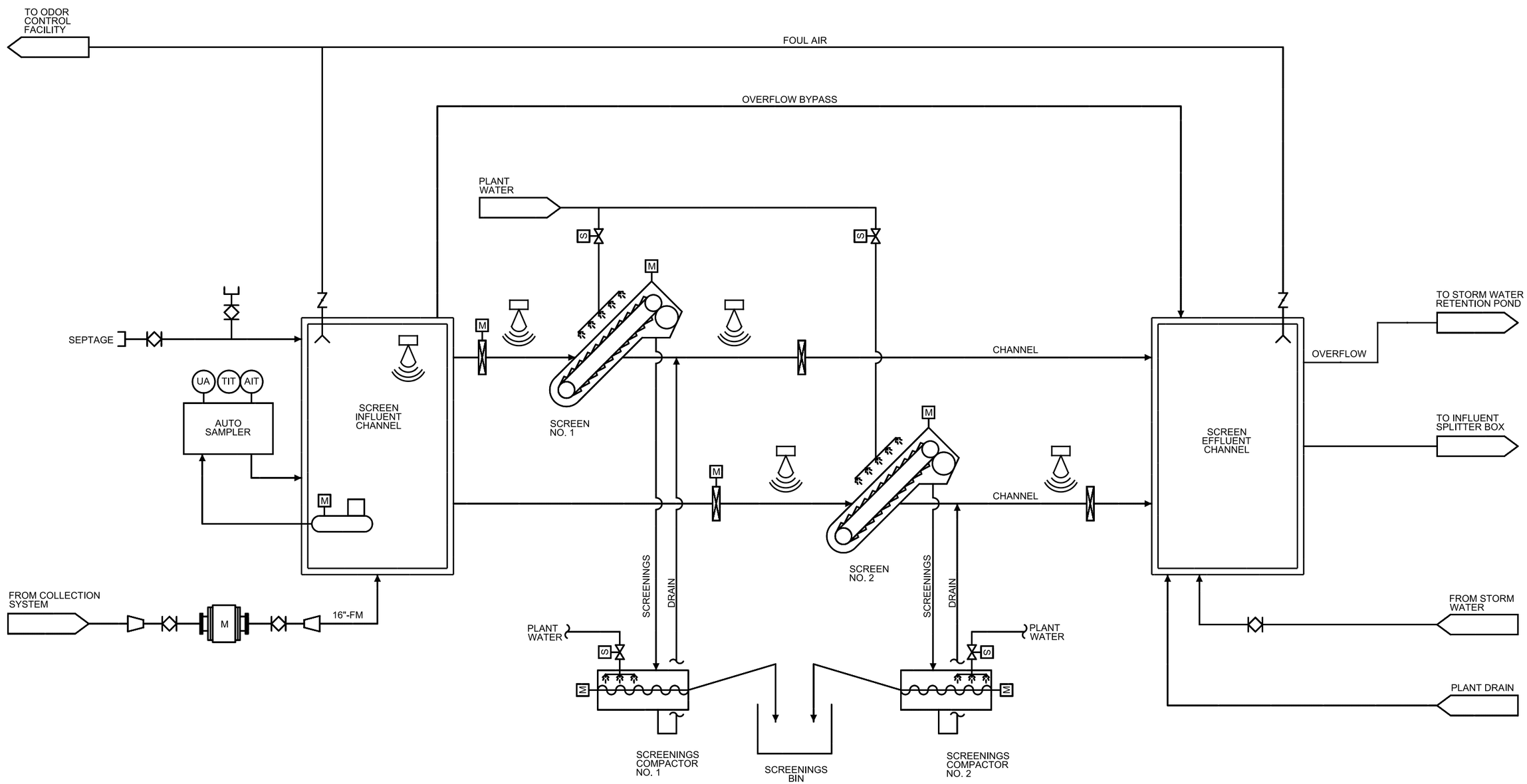

HEADWORKS

HEADWORKS PROCESS FLOW DIAGRAM

FIGURE 2.2

86-SanLuisObispo9-12F2.2-8930A10.ai

COUNTY OF SAN LUIS OBISPO

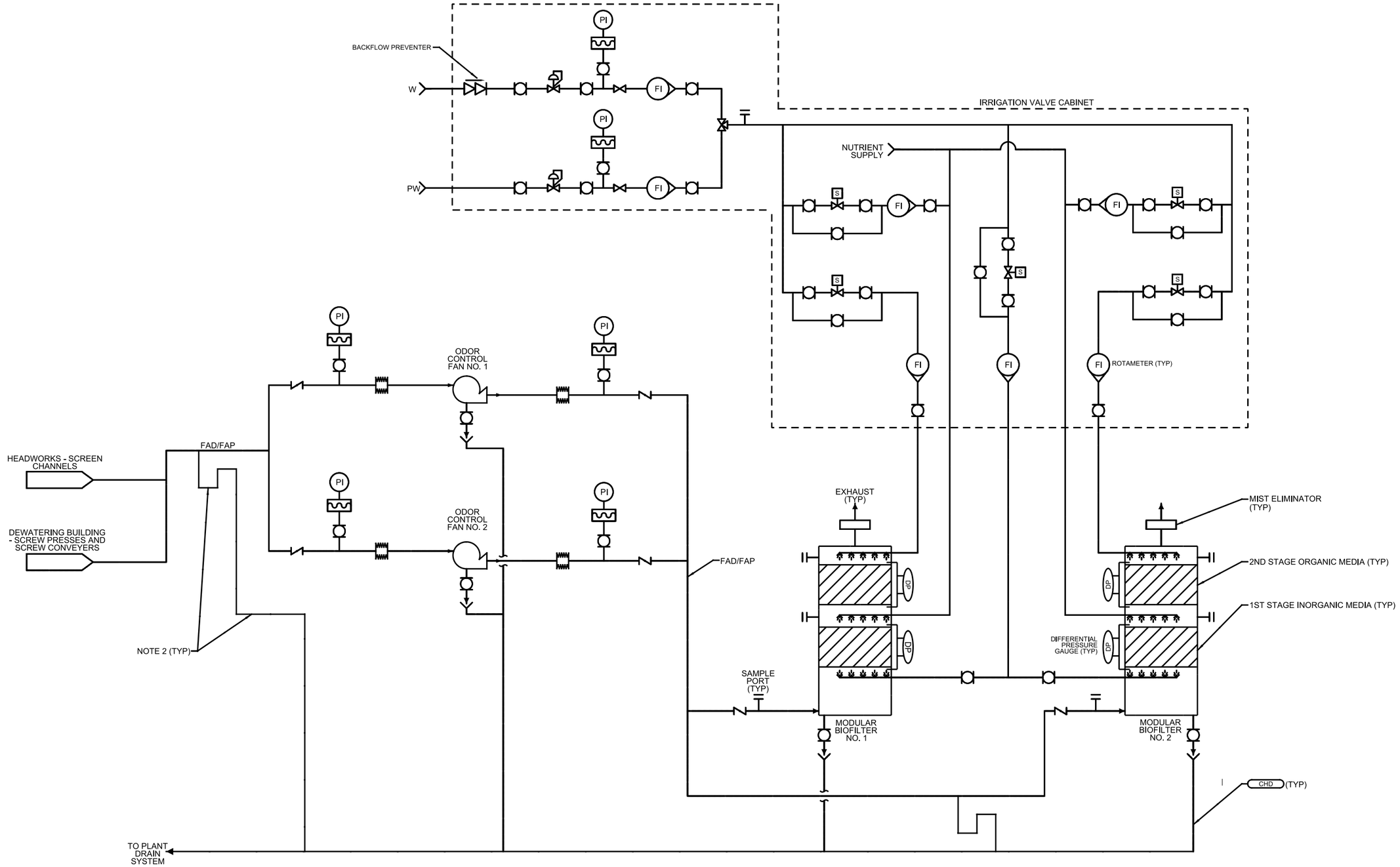

ODOR CONTROL SYSTEM PROCESS FLOW DIAGRAM

FIGURE 2.3

86-SanLuisObispo9-12F2.3-8930A10.ai

carollo
Engineers...Working Wonders With Water™

COUNTY OF SAN LUIS OBISPO

Table 2.2 summarizes the design criteria of the preliminary treatment support facilities that have been conceptualized to date. Figure 2.4 is the process flow diagram developed for the support facilities.

Table 2.2 Design Criteria Summary – Support Facilities San Luis Obispo County

Design Parameter	Unit	Criterion/Value	Criteria Intention: "Fixed" Criteria for D/B Team	Criteria Intention: "Baseline" Design Assumption
Plant Drain Pump Station				
Type of structure	--	Precast concrete manhole		X
Volume	gal	12,000		X
Dimension (D x H)	ft x ft	8 x 34		X
Plant Drain Pumps				
Type of pump	--	Submersible, non-clog	X	
Number of units				
Lead	--	1	X	
Lag	--	1	X	
Standby	--	0		X
Total	--	2		X
Pump speed control	--	VFD	X	
Flow rate criteria				
Time for draining a secondary clarifier (maximum)	Hours	8	X	
Handle all process drain and plant recycle flows	--	Required	X	
Flow rate, each	gpm	425		X
Plant Drain Pump Flow Metering				
Type of meter	--	Magnetic		X
Meter size (diameter)	inches	8		X
Accuracy rating, minimum	%	±1% of flow rate	X	
STORM WATER MANAGEMENT				
Storm Water Retention Pond				
Type of side lining	--	TBD by D/B team		X
Type of bottom lining	--	Concrete	X	

Table 2.2 Design Criteria Summary – Support Facilities San Luis Obispo County

Design Parameter	Unit	Criterion/Value	Criteria Intention: "Fixed" Criteria for D/B Team	Criteria Intention: "Baseline" Design Assumption
Storm size	--	50-year(1)	X	
Storm design duration	hours	10(1)	X	
Volume	gal	400,000		X
Side slope	H:V	2:1(1)		X
Maximum water depth	ft	10	X	
Storm Drain Pump Station				
Type of structure	--	Precast concrete manhole		X
Working volume	gal	2,500		X
Dimension (D x H)	ft x ft	6 x 15		X
Storm Drain Pumps				
Type of pump	--	Submersible, non-clog	X	
Number of units				
Duty	--	1	X	
Standby	--	1	X	
Total	--	2	X	
Pump speed control	--	Constant Speed		X
Flow rate criteria				
Time for draining full pond	Days	2	X	
Flow rate, each	gpm	140		X

Notes:
(1) Based on the County's 2011 Public Improvement Standards.

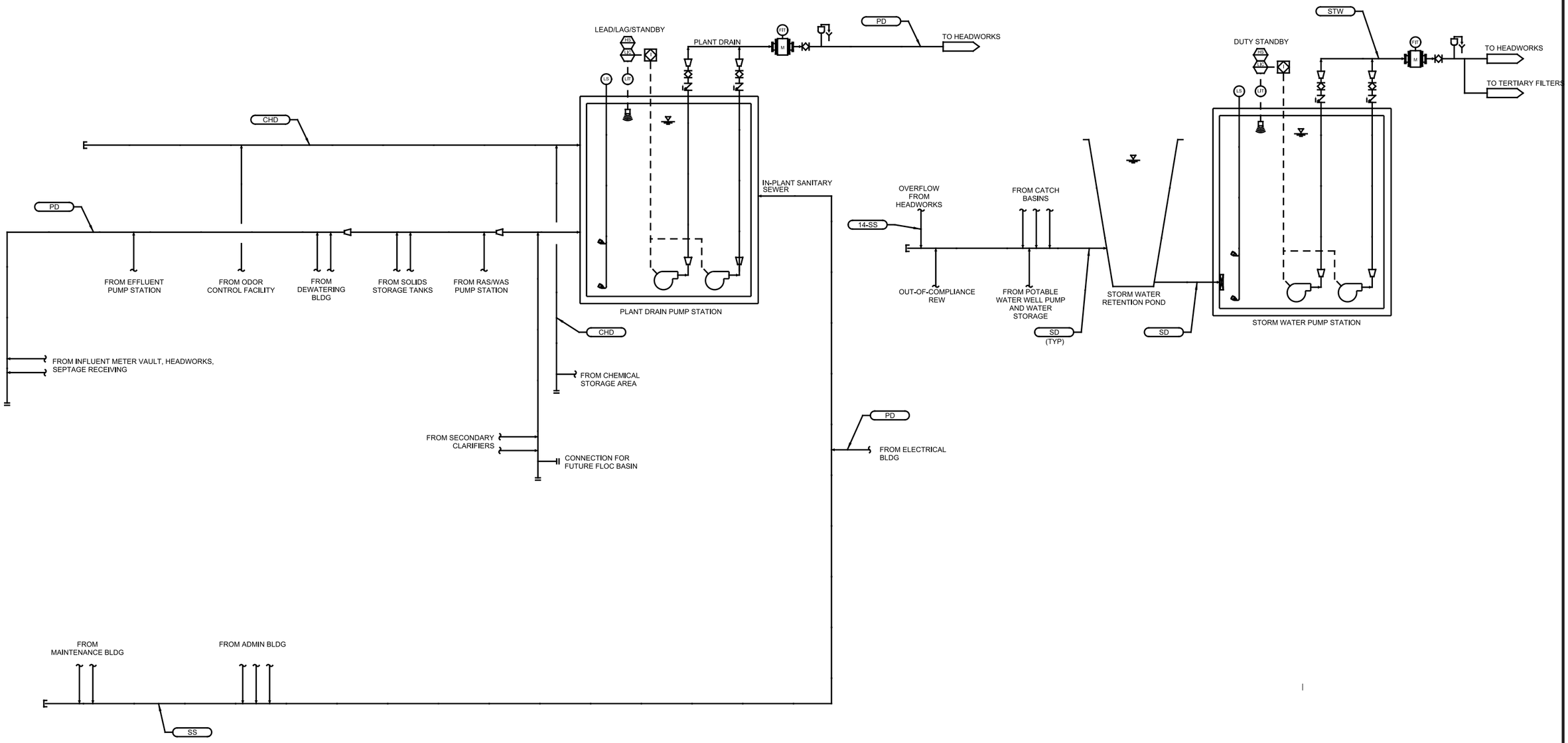

SUPPORT FACILITIES PROCESS FLOW DIAGRAM

FIGURE 2.4

87-SanLuisObispo9-12F2.4-8930A10.ai

carollo
Engineers...Working Wonders With Water™

COUNTY OF SAN LUIS OBISPO

2.3.2 Design Considerations

This section summarizes the important non-quantitative criteria for the preliminary treatment and support facilities that should be considered by the designer during the D/B phase of the project.

2.3.2.1 Influent Monitoring

In accordance with the Monitoring and Reporting Program (MRP) issued by the State of California Regional Water Quality Control Board, the quantity and the quality of the influent wastewater shall be monitored at the LOWRF. To facilitate this effort, a flowmeter shall be provided on the influent force main and could be located in an open vault (i.e., no cover) adjacent to the Headworks. If the meter vault concept is implemented during the D/B phase, considerations should be given to avoid classifying the meter vault a permit-required confined space based on CAL-OSHA definitions.

In addition, an automatic sampler shall be provided for collecting representative influent samples, which would be used for conducting water quality analyses. The sampling point for the sampler should be located upstream of any in-plant return flows and upstream of the septage and in-plant storm water discharges.

2.3.2.2 Influent Screening and Screenings Handling

Provisions for automatically bypassing the influent screens upon high level should be provided at the headworks and are intended for emergency use only. An example would be an overflow pipe that is connected upstream of the screen inlet gates and discharging downstream the screen outlet gates. When both of the mechanical screens are out of service, the level in the headworks would rise until it reaches the overflow level, at which the flow begins to bypass the influent screens.

As described in Table 2.1, the project should require a single source of responsibility for the mechanical screens and screenings compactors. For simplicity and consistency, one manufacturer should furnish this equipment as part of a coordinated package system that includes a common programmable logic controller (PLC).

To optimize the Headworks layout, the following considerations must be given during detailed design:

- Staggering mechanical screens
- Use of right-angle drives for screenings compactors
- Discharging processed screenings into a common bin

For odor containment, the discharge of each compactor should be equipped with a bagging system.

2.3.2.3 Headworks Structure

The selected D/B team should provide provisions for properly protecting interior concrete surfaces and exposed metallic components at the Headworks from corrosion due to the presence of sewer gases.

2.3.2.4 Septage Receiving

Since the septage receiving system will be designed to handle the septage hauled from the Los Osos community only, the anticipated delivery volumes and frequencies are low. For this reason and to avoid any unnecessary operations and maintenance (O&M); the septage receiving system should be designed to discharge the flow directly into the Headworks by gravity. A septage-holding tank or pump station shall not be provided.

In addition, the designer should consider providing a practical means to remove large objects in septage that would settle out in the channel; the addition of a “rock trap” should be investigated.

Further, it would be desirable for the County to limit septage deliveries to specific hours of the day when the influent flows are expected to be above a minimum threshold. This practice would minimize the impacts of septage on the downstream treatment processes.

2.3.2.5 Odor Control

The general approach in the design of the foul air withdrawal and control system should be to contain point sources and ventilate the associated enclosed air spaces at sufficiently high rates. At the Headworks, the mechanical screens, channels, and gates should be covered. Gravity drain lines that discharge to the enclosed space of the Headworks should be provided with a P-trap where appropriate. At the Dewatering Building, during the selection of the dewatering technology, the D/B team should consider the impacts of the dewatering technologies on the odor control facility design. For instance, the belt presses would require a substantially larger air volume to be treated than the screw presses.

The selected odor control technology will require an intermittent supply of water to irrigate the media and humidify the incoming foul air. It would be desirable for the odor control facility to be provided with two sources of water for reliability: utility water (UW) and potable water. The former is considered the primary source, and the latter is provided as a backup source. Water drained from the odor control facility is ultimately discharged to the treatment processes. If potable water is used for an extended period of time, the impact of adding that volume to the plant hydraulics may become appreciable in the long term.

In addition, the D/B team should consider locating the odor control facility away from the site boundaries to allow dilution of treated air. If the facility must be located close to the property line, a polishing stage using activated carbon or a similar technology may be needed.

2.4 LAYOUT

Figure 2.5 and Figure 2.6 show a conceptual plan and its corresponding section for the Headworks. Figure 2.7 and Figure 2.8 presents a plan and a section for the Odor Control Facility as currently envisioned. Similarly, Figure 2.9 illustrates the conceptual layout for the Plant Drain Pump Station. The Storm Water Pump Station should be laid out similarly.

2.5 CONTROL NARRATIVES

This section provides a preliminary control narrative for each of the preliminary treatment and support processes. The control narrative describes how the system is intended to be controlled during normal operating conditions. In general, equipment and processes would be in the remote automatic mode, and the Plant PLC would control them via supervisory control and data acquisition (SCADA).

2.5.1 Influent Metering and Sampling

The wastewater flow to the plant will be conveyed from the Mid-Town Pump Station through a force main. At the Headworks, this flow rate will be measured before it converges with other flow streams. The resulting flow signal will be primarily used to control the automatic sampler for collection of composite samples for the influent wastewater.

2.5.2 Influent Screening

The influent screening system will be located at the Headworks and consist of two mechanical screens (one duty and one standby). Each screen channel will be equipped with an inlet gate and an outlet gate. Under normal operation, one channel will be in service, with its inlet and outlet gates open. The mechanical screen associated with the channel in service will operate intermittently based on two parameters: rake cycle time and differential level. More specifically, the screen will start and remove the captured screenings either based on time elapsed since the last rake cycle or when the differential level across the screen reaches a predetermined setpoint. The screen will stop either when the screen run time expires or when the differential level reaches another predetermined setpoint. All of the aforementioned control parameters will be operator adjustable at the SCADA.

When the duty screen experiences a failure, the standby screen will be automatically placed in service by opening its inlet gate. Upon that action, the inlet gate for the failed screen will close in order to take it out of service.

2.5.3 Screenings Handling

For compaction and dewatering of the materials removed by the mechanical screens, two compactors (one duty and one standby) will be provided. Each screen will have a dedicated compactor to which it discharges directly without a conveyor. In normal operation, the compactor associated with the screen in service will essentially operate in parallel. More

specifically, the compactor will start when the associated mechanical screen starts. The compactor will stop when the associated mechanical screen stops.

The mechanical screens and the screenings compactors shall be supplied by a single manufacturer that will assume the overall system responsibility. The selected manufacturer will also furnish a PLC in a common control panel to control both equipment and will be responsible for the programming.

2.5.4 Septage Receiving

The septage receiving station is envisioned as a gravity discharge system without any mechanical equipment. As such, it does not require remote control or monitoring.

2.5.5 Odor Control

Foul air from the various odor sources at the plant will be contained and treated to an appropriate level. To be specific, the channels at the Headworks and the enclosed screw presses and screw conveyers at the Dewatering Building will be connected to an odor control facility for continuous withdrawal of air. This facility will be equipped with two parallel trains, each with a dedicated fan. In normal operation, both trains will operate continuously. Fan status will be monitored at the SCADA to alert operators of fan failures and the resulting reduction in odor control capacity. Under such a scenario, manual dampers would need to be operated in the field to place the failed fan and associated train out of service.

2.5.6 Plant Drain Pump Station

Since the influent wastewater is pumped from an off-site lift station, a pump station will be necessary to collect various plant drains and process recycle streams and to return them to the treatment processes. More specifically, the Plant Drain Pump Station will facilitate periodic drainage of treatment processes (such as secondary clarifiers and flocculation basins if any) for maintenance and also handle continuous or intermittent recycle streams originating from the process areas.

As currently envisioned, two submersible pumps (lead/lag) will be provided and will be controlled with variable frequency drives (VFDs). In normal operation and upon detection of high level, the lead pump will automatically start. If the level continues to rise and the high high level is reached, the lag pump will start. When the low level is detected, the lag pump will stop. At the low low level, the lead pump will stop.

The lead/lag pump designation will be made at the SCADA to balance the run time between the two pumps.

2.6 UTILITIES

Utility services needed at the preliminary treatment and support facilities include UW, potable water, and electricity.

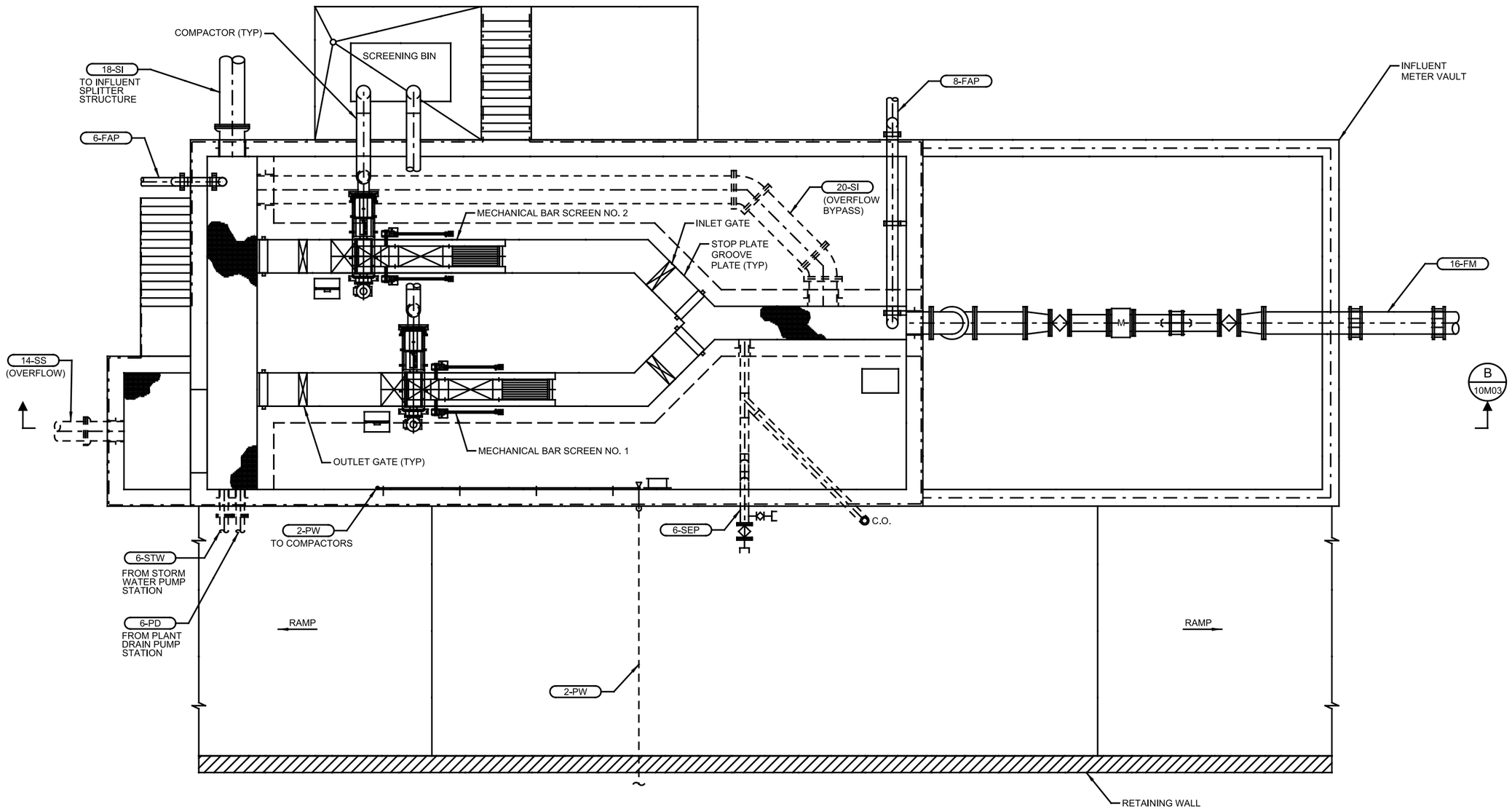

HEADWORKS CONCEPTUAL PLAN

FIGURE 2.5

carollo
Engineers...Working Wonders With Water™

COUNTY OF SAN LUIS OBISPO

86-SanLuisObispo9-12F2.5-8930A10.ai

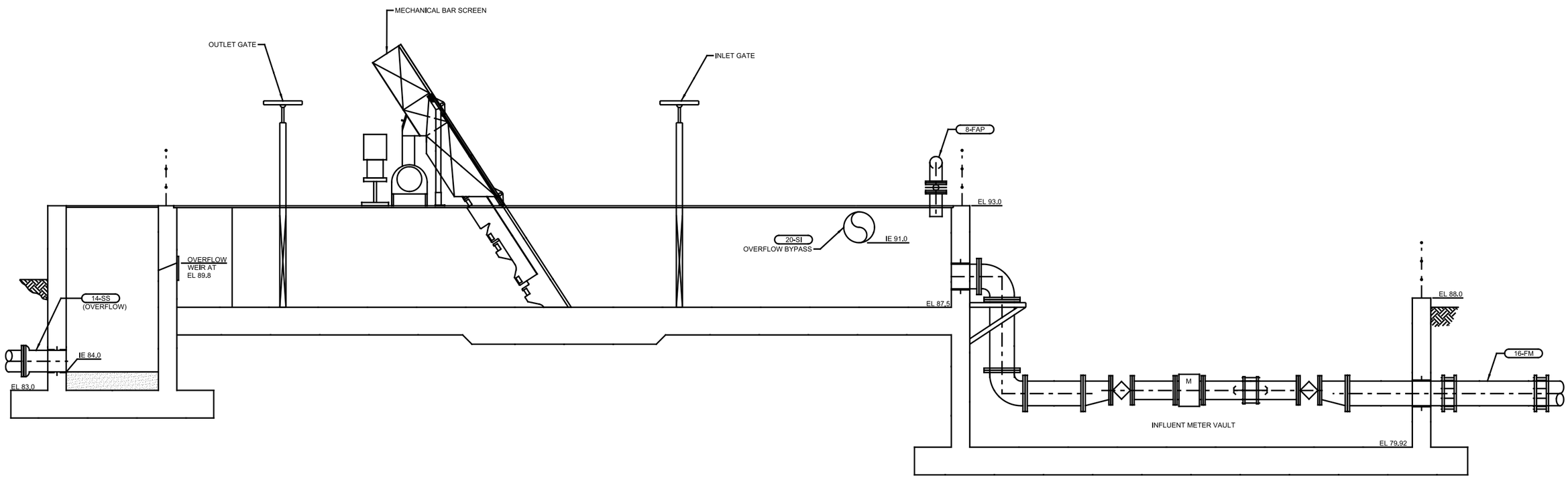

HEADWORKS CONCEPTUAL SECTION

FIGURE 2.6

86-SanLuisObispo9-12F2.6-8930A10.ai

carollo
Engineers...Working Wonders With Water™

COUNTY OF SAN LUIS OBISPO

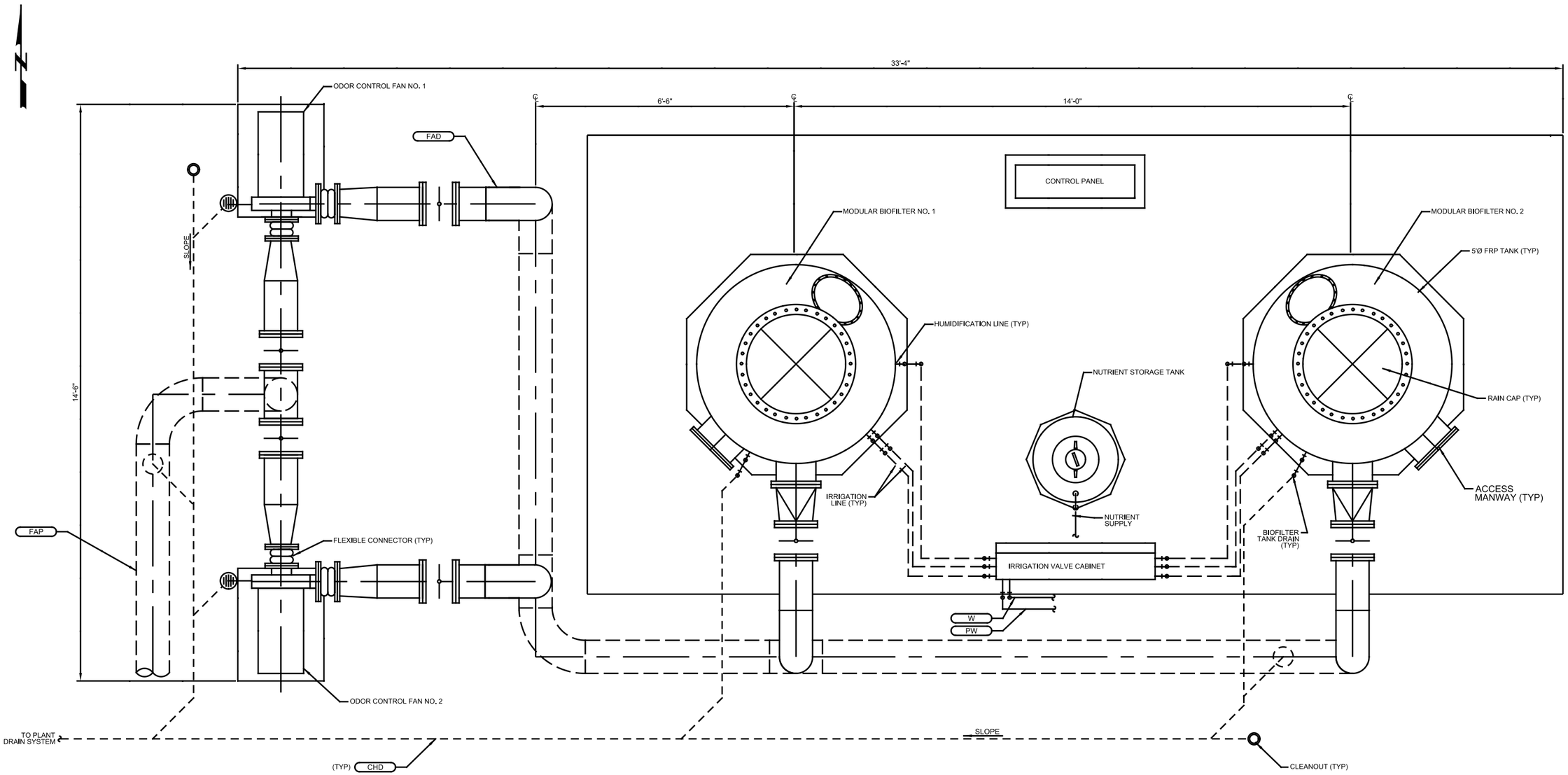

ODOR CONTROL FACILITY - CONCEPTUAL PLAN

FIGURE 2.7

86-SanLuisObispo9-12F2.7-8930A10.ai

carollo
Engineers...Working Wonders With Water™

COUNTY OF SAN LUIS OBISPO

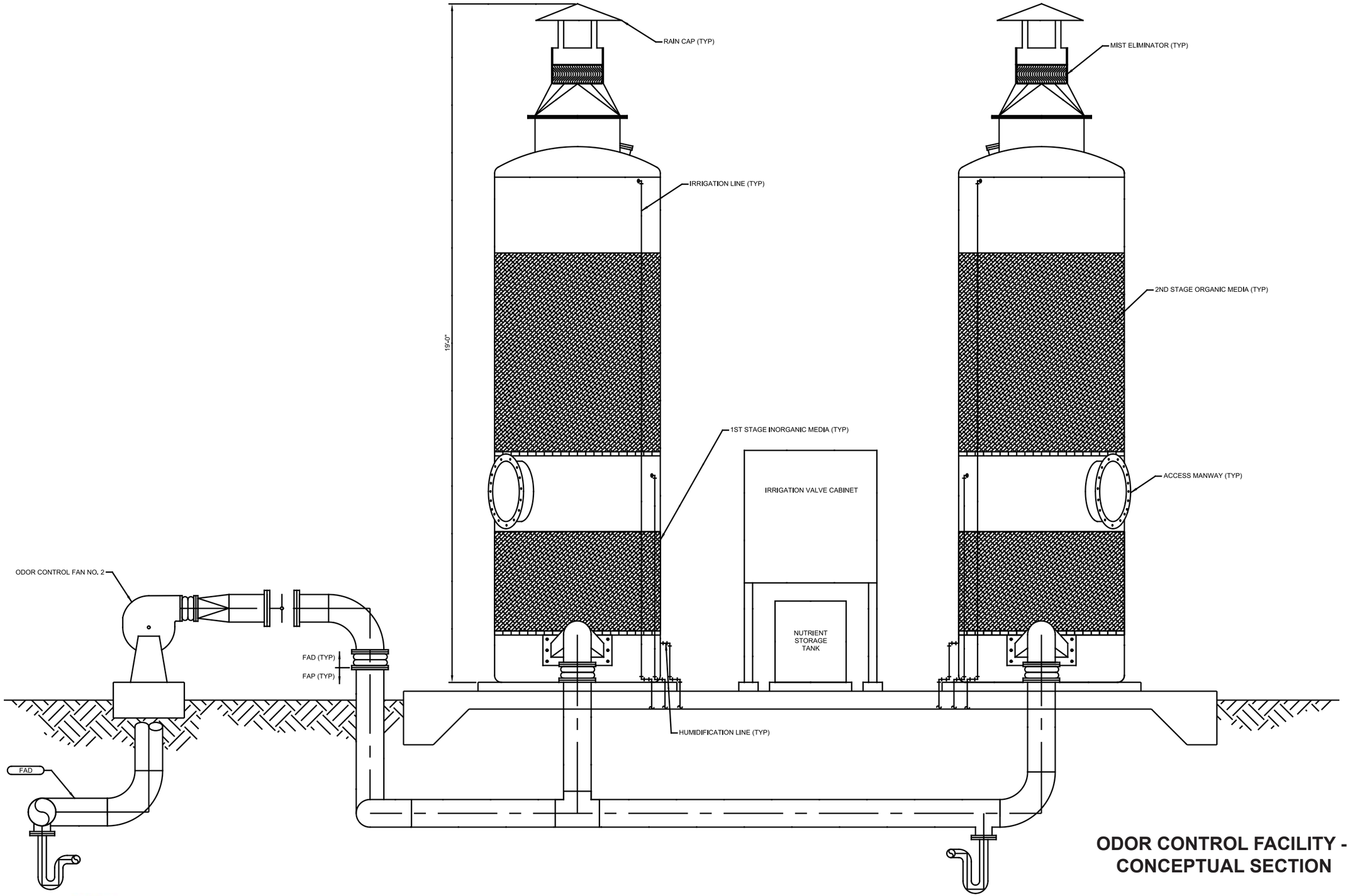

ODOR CONTROL FACILITY - CONCEPTUAL SECTION

FIGURE 2.8

86-SanLuisObispo9-12F2.8-8930A10.ai

carollo
Engineers...Working Wonders With Water™

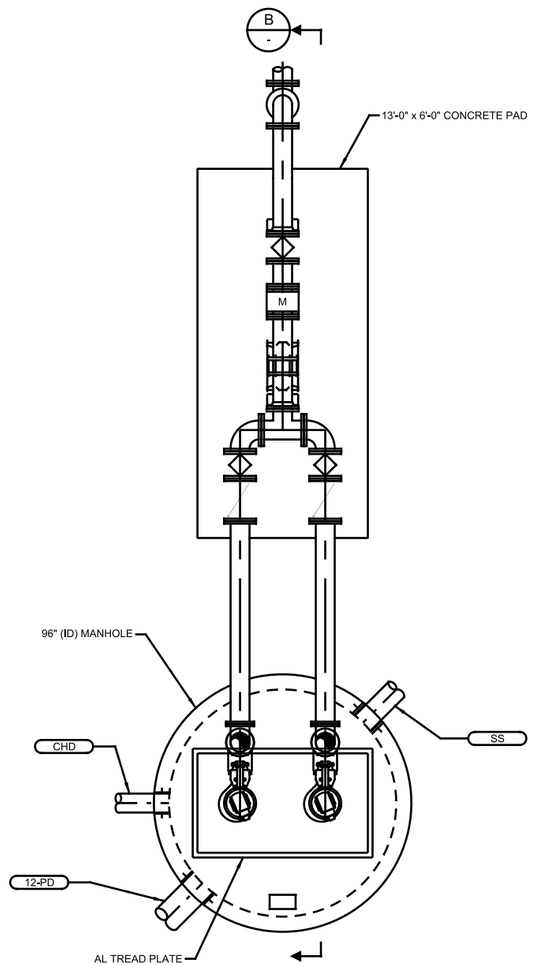

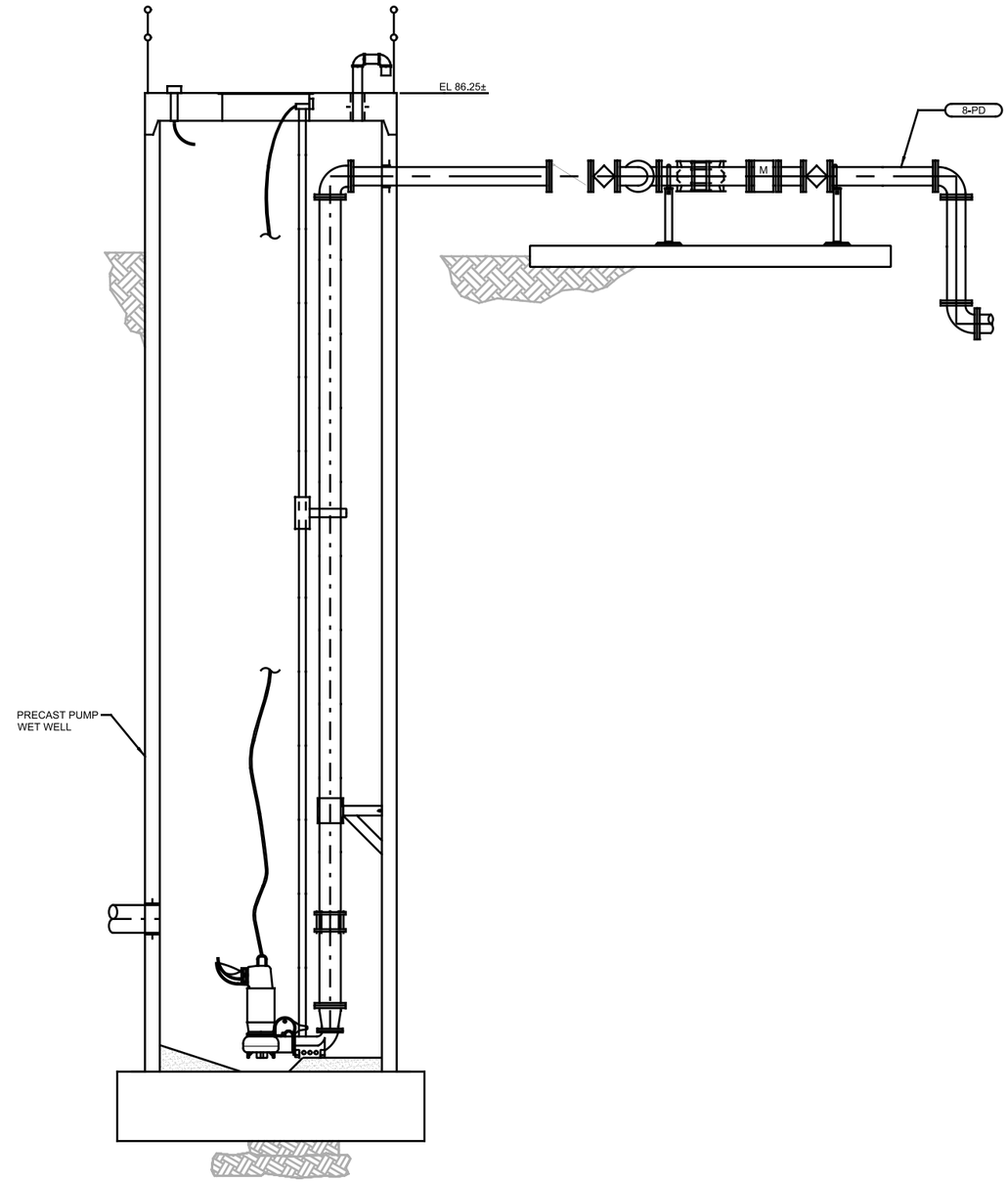

PLANT DRAIN PUMP STATION

FIGURE 2.9

carollo
Engineers...Working Wonders With Water™

COUNTY OF SAN LUIS OBISPO

86-SanLuisObispo9-12F2.9-8930A10.ai

2.6.1 Utility Water

UW is also referred to as plant water. Standard hose bibs shall be provided throughout the headworks and the odor control facility for general washdown. UW shall also be hard-piped to the mechanical screens and screenings compactors for use as spray water. In addition, UW will be used a primary source of irrigation at the odor control facility.

A larger hose connection shall be provided at the septage receiving station to facilitate periodic flushing of the gravity septage discharge piping. Similarly, a larger hose connection shall be provided at the deck of the headworks for the periodic cleaning of the bar screen channels and equipment.

High-pressure water monitors or similar provisions shall be provided around the perimeter of the storm water retention pond to facilitate cleaning. The water monitors shall be connected to the UW system.

2.6.2 Potable Water

An emergency eye-wash and shower unit shall be provided at the septage receiving station near the unloading connection. It requires using potable water.

Potable water shall be provided at the odor control facility as a backup source of irrigation water.

2.6.3 Electricity

Electrical outlets shall be provided throughout the preliminary treatment facilities to facilitate O&M activities.

SECONDARY TREATMENT

3.1 PURPOSE

The purpose of this chapter is to identify the necessary secondary treatment facilities at the San Luis Obispo County's (County) proposed Los Osos Water Recycling Facility (LOWRF) and present their preliminary design criteria. As such, it establishes a preliminary basis for the design of the secondary treatment facilities and provides guidance and direction to the subsequent phases of this project.

3.2 PROCESS OVERVIEW

Secondary treatment is designed to remove biochemical oxygen demand (BOD), total suspended solids (TSS), and nutrients from the influent wastewater. A typical secondary process consists of biological treatment, secondary clarification, and return activated sludge (RAS)/waste activated sludge (WAS) pumping. The baseline design for the LOWRF includes an activated sludge/biological nutrient removal (BNR) system, secondary clarification, and RAS/WAS pumping. Figure 3.1 is the overall site plan developed as part of the preliminary design efforts, which highlights the potential locations of these facilities. Figure 3.2 shows the basic process flow diagram for the secondary treatment facilities. As shown, wastewater enters the secondary treatment process from the headworks via an influent splitter structure that splits the flow to the two oxidation ditches. The effluent from the ditches flows into a mixed liquor splitter structure that splits the flow to two secondary clarifiers. Following clarification, the wastewater undergoes tertiary treatment.

3.2.1 Activated Sludge Process

The baseline design for the LOWRF includes an oxidation ditch activated sludge process designed for nutrient removal. Each oxidation ditch is a concrete basin in an oval racetrack configuration. The general layout of the process is shown on Figure 3.2. As shown, wastewater first enters an anoxic zone in the basin. In this zone, secondary influent, RAS, and return flow from the aerobic zone are mixed to remove the nitrate (denitrification) created in the aerobic zone. The mixture is then sent to the aerobic zone where mechanical aerators are used to oxygenenate the flow and maintain flow circulation around the ditch. In the aerobic zone, the biomass converts the influent BOD to cell mass and influent ammonia to nitrate. From the aerobic zone, a portion of flow is sent back to the anoxic zone, as described above, and the remaining flow is sent to secondary clarification.

3.2.2 Secondary Clarification

The primary function of the secondary clarifiers is to separate the activated sludge solids from the influent mixed liquor. This separation creates a well-clarified, stable effluent low in BOD and TSS and a high solids concentration underflow.

The effluent overflows the clarifier and is sent to tertiary treatment, and the solids are collected by the clarifier mechanism and withdrawn by the RAS/WAS pumps.

3.2.3 RAS/WAS Pump Station

The RAS/WAS pumps are designed to withdraw the activated sludge from the clarifiers. The pumps return the majority of the flow to the oxidation ditch, but can also waste a portion of the flow to solids treatment. Sludge wasting removes the cell mass created in the oxidation ditch and is used to control the mixed liquor suspended solids (MLSS) concentration.

3.3 DESIGN CRITERIA

Through the efforts completed to date as part of the preliminary design development and the preceding engineering tasks, a number of specific parameters and processes have been evaluated, vetted, and validated. The criteria listed in the subsequent tables are identified as “fixed” criteria or a “baseline” design assumption. **The fixed criteria represent specific parameters that are not anticipated to be revised as design progresses, based on the evaluation and vetting efforts completed to date, without additional justification, or as a result of currently unforeseen changes.** As such, the design/build (D/B) team is expected to assume these criteria to be fixed through the remainder of the design phase efforts. However, it should be noted that some of the fixed criteria may be revisited if financial reasons dictate changes to the overall design (i.e., should the subsequent cost estimates exceed the project budget).

Other criteria are identified as “baseline” design assumptions, which represent the preliminary parameters used by Carollo Engineers, Inc. (Carollo) as part of the initial design definition efforts but that are not specifically fixed at this point in the design process. These “baseline” criteria are expected to be further evaluated and adjusted by the D/B team and the County as design progresses. It is anticipated that innovation, value engineering, and general preferences by the D/B team may result in proposed variations to some of the baseline design assumptions presented herein.

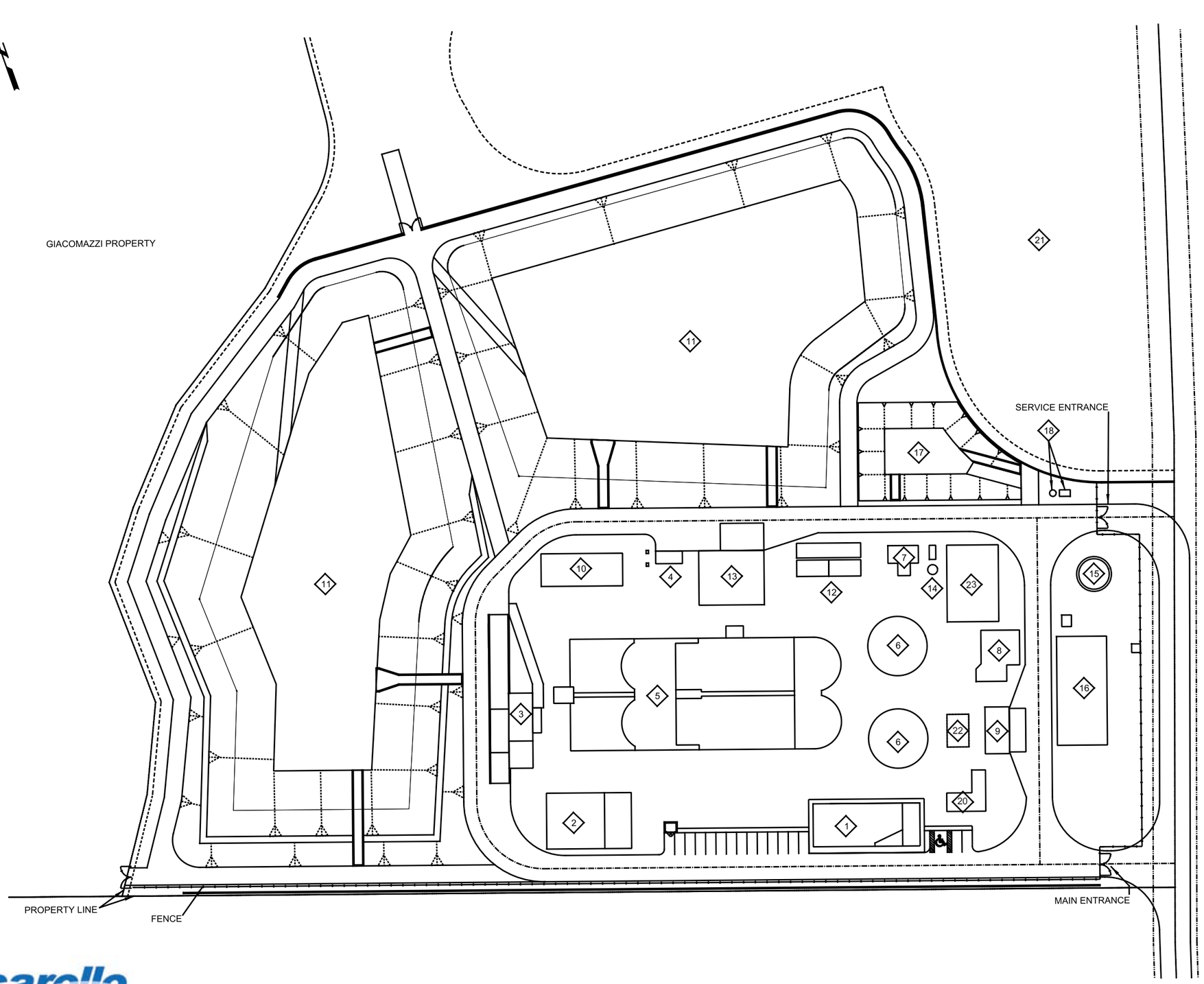

FACILITIES:

1. ADMINISTRATION BUILDING
2. MAINTENANCE BUILDING
3. INFLUENT METER VAULT/HEADWORKS/SEPTAGE RECEIVING
4. ODOR CONTROL FACILITY
5. OXIDATION DITCH
6. SECONDARY CLARIFIERS
7. RAS/WAS PUMP STATION
8. TERTIARY FACILITY
9. CHEMCIAL FACILITY
10. EFFLUENT PUMP STATION
11. REW STORAGE PONDS
12. SOLIDS STORAGE TANKS
13. DEWATERING BUILDING
14. PLANT DRAIN PUMP STATION
15. WATER STORAGE TANK
16. ELECTRICAL BUILDING
17. STORM WATER RETENTION POND
18. STORM WATER PUMP STATION
19. GROUNDWATER WELL
20. FILTER INFLUENT PUMP STATION
21. DESIGNATED ENVIRONMENTALLY SENSITIVE HABITAT AREA.
22. FUTURE FLOCCULATION BASIN
23. UV FACILITY

SITE PLAN

FIGURE 3.1

86-SanLuisObispo9-12F3.1-8930A10.ai

carollo
Engineers...Working Wonders With Water™

COUNTY OF SAN LUIS OBISPO

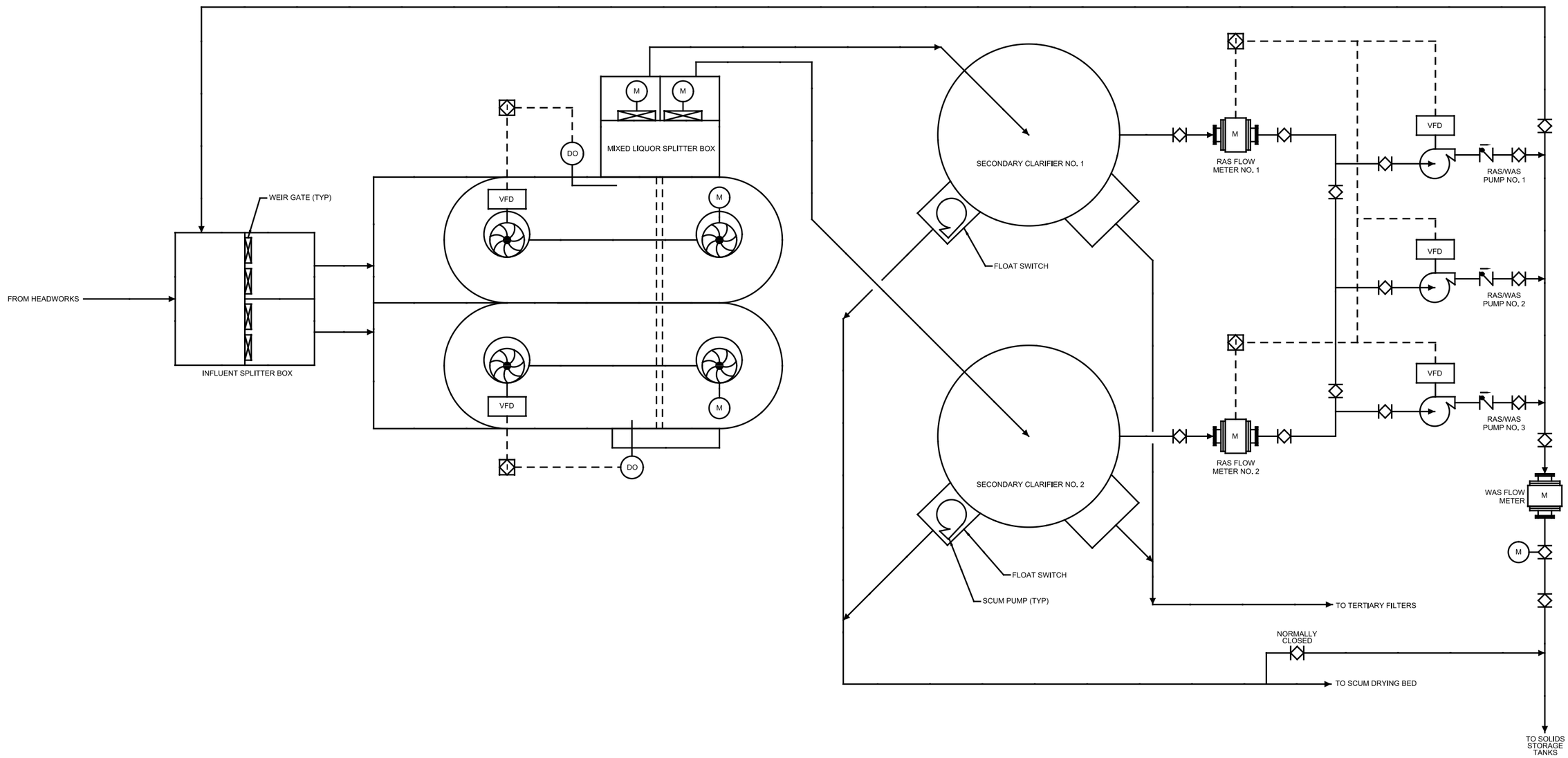

SECONDARY TREATMENT PROCESS FLOW DIAGRAM

FIGURE 3.2

86-SanLuisObispo9-12F3.2-8930A10.ai

carollo
Engineers...Working Wonders With Water™

COUNTY OF SAN LUIS OBISPO

3.3.1 Specific Design Criteria

The design criteria for the secondary treatment processes are summarized in Table 3.1. Table 3.1 also identifies each criterion as a "baseline" design assumption or an item that is "fixed" for the D/B team.

Table 3.1 Design Criteria Summary – Secondary Treatment San Luis Obispo County

Design Parameter	Units	Value/Criteria	Criteria Intention: "Fixed" Criteria for D/B Team	Criteria Intention: "Baseline" Design Assumption
Oxidation Ditch				
Type of Process	-	Extended Aeration	X	
Number of Basins	-	2	X	
Type	-	Mechanical or Diffused Aeration	X	
Side Water Depth	FT	12		X
Basin Volume, each	MG	1.08		X
No. of Zones				
Anoxic	-	1	X	
Aerobic	-	1		X
Total	-	2		X
Anoxic Zone Volume (Per Basin)	MG	0.22		X
Aerobic Zone Volume (Per Basin)	MG	0.86		X
Total Basin Volume	MG	2.15		X
Hydraulic Residence Time at ADMMF	hours	37.9	X	
Operating MLSS at ADMMF	mg/L	2,950		X
Organic Loading at ADMMF	PPD	3,870		X
Total Solids Residence Time (SRT) at ADMMF	days	21.8	X	
Total Aerobic SRT at ADMMF	days	17.4		X
Average F/M ratio	lbs BOD per lbs MLVSS per day	0.09		X
Total MLR Flow				
ML Recirculation Ratio	--	11.0		X
Total MLR flow, per basin	mgd	15.0		X

Table 3.1 Design Criteria Summary – Secondary Treatment San Luis Obispo County

Design Parameter	Units	Value/Criteria	Criteria Intention: "Fixed" Criteria for D/B Team	Criteria Intention: "Baseline" Design Assumption
Oxidation Ditch Equipment – Mechanical Aeration				
Anoxic Mixers				
Number per Basin	-	1		X
Type	-	Submersible		X
Drive Type	-	Constant Speed		X
Drive Motor	hp	15		X
Mechanical Aerators				
Type	-	Surface		X
Number per Basin	-	2	X	
Drive Type	-	1 Constant Speed and 1 VFD		X
Drive Motor	hp	50		X
Total Oxygen Required (ADMMF Load Conditions)	lb/day	5,570		X
Oxygen Transfer Correction Factor (Alpha Factor)		See equations below	X	
Oxidation Ditch Equipment – Diffused Aeration				
Anoxic Mixers				
Number per Basin	-	1		X
Type	-	Submersible		X
Drive Type	-	Constant Speed		X
Drive Motor	hp	15		X
Aerobic Mixers				
Number per Basin	-	2		X
Type	-	Submersible		X
Drive Type	-	Constant Speed		X
Diffused Aeration				
Diffuser Type		Course or Fine Bubble		X
Total Oxygen Required (ADMMF Load Conditions)	lb/day	5,570		X

Table 3.1 Design Criteria Summary – Secondary Treatment San Luis Obispo County				
			Criteria Intention	
Design Parameter	Units	Value/Criteria	"Fixed" Criteria for D/B Team	"Baseline" Design Assumption
Course Bubble Oxygen Transfer Correction Factor (Alpha Factor)	-	See equations below	X	
Fine Bubble Oxygen Transfer Correction Factor (Alpha Factor)	-	See equations below	X	
Aeration Blowers				
Blower Type		Single-stage or high-speed turbo		X
Number of Blowers				
Duty	-	2	X	
Standby	-	1	X	
Total	-	3	X	
Secondary Clarifiers				
Type of Basin	-	Circular	X	
Number of Clarifiers	-	2	X	
Type of Sludge Withdrawal	-	Rapid Sludge Draw-off	X	
Type of Scum Removal	-	Scum Beach		X
Inside Diameter	ft	50	X	
Design SVI	mL/g	150		X
Design CSF	-	1.44		X
Surface Area, Each	ft^2	1,963		X
Total Surface Area	ft^2	3,927		X
Side Water Depth	ft	14	X	
Total Volume per Basin	ft^3	27,490		X
Surface Overflow Rate (SOR)				
at ADMMF(1)	gpd/ft^2	664		X
at PHF(2)	gpd/ft^2	710		X
Solids Loading Rate at ADMMF(1)	ppd/ft^2	35		X
Weir Loading Rate at ADMMF(1)	gpd/ft	5,392		X
RAS Flow Range at AAF	% of flow	40 – 140		X
	mgd	0.5 – 1.7		X

Table 3.1 Design Criteria Summary – Secondary Treatment San Luis Obispo County

Design Parameter	Units	Value/Criteria	Criteria Intention: "Fixed" Criteria for D/B Team	Criteria Intention: "Baseline" Design Assumption
RAS/WAS Pumps				
Type of Pump	-	Non-clog Centrifugal		X
Number of Pumps				
Duty	-	2	X	
Standby	-	1	X	
Total	-	3	X	
Pump Capacity, Each	gpm	600		X
Total Capacity	mgd	1.7		X
Drive Type	-	VFD	X	
Est. Horsepower, Each	hp	10		X
Secondary Scum Pumps				
Type of Pump	-	Chopper Submersible		X
Number of Pumps				
Duty	-	2	X	
Standby	-	0		X
Total	-	2		X
Pump Capacity, Each	mgd	0.15		X
Drive Type	-	Constant Speed		X
Est. Horsepower, Each	hp	5		X

Notes:
(1) Assumes one secondary clarifier out of service.
(2) Assumes both clarifiers are in service.

3.3.2 Design Considerations

This section summarizes the important non-quantitative criteria for the secondary treatment facilities that should be considered by the designer during the D/B phase of the project. The design shall:

- Provide a means to maintain a two to one flow split in the oxidation ditch influent splitter structure in the event that one surface aerator is out of service.
- Provide a permanent means to access top of the mechanical aerators for maintenance.

- Include an anoxic zone upstream of the oxidation ditch that receives influent, RAS, and mixed liquor return flow.
- Provide means of dissolved oxygen control in the oxidation ditch.
- Provide automated means to store flow in the oxidation ditch and to shut down tertiary treatment during periods of low or no influent flow. Allow automatic operation with adjustable settings in the programming. The system shall be equipped with positive alarms for failure events.
- Provide a means to remove scum build up in the oxidation ditch. This could be achieved by moving scum to the secondary clarifier for removal or removing scum directly from the basin.
- Provide adequate wash down, removal of material buildup, and safe operator access to areas in the basins where grit is likely to accumulate.
- Use the following equations to calculate the oxygen transfer correction factor (alpha factor) for mechanical, course bubble, and fine bubble aeration.

<u>Mechanical and Coarse Bubble Aeration</u>

$$\alpha_{adjustment} = \frac{1}{0.95} e^{\frac{-0.037*(MLSS,mg/L)}{1,000}}$$

If MLSS is less than 1,386 mg/L, then $\alpha_{adjustment} = 1$

$$\alpha_{SRT} = 0.375 + 0.022 * (SRT, d) + 0.2$$

If α_{SRT} is greater than 0.95, then $\alpha_{SRT} = 0.95$

$$\alpha = \alpha_{adjustment} * \alpha_{SRT}$$

<u>Fine Bubble Aeration</u>

$$\alpha_{adjustment} = \frac{1}{0.75} e^{\frac{-0.08788*(MLSS,mg/L)}{1,000}}$$

If MLSS is less than 3,274 mg/L, then $\alpha_{adjustment} = 1$

$$\alpha_{SRT} = 0.375 + 0.022 * (SRT, d)$$

If α_{SRT} is greater than 0.75, then $\alpha_{SRT} = 0.75$

$$\alpha = \alpha_{adjustment} * \alpha_{SRT}$$

- Include oxygen transfer efficiency testing of diffusers to confirm the design oxygen transfer efficiency if diffused aeration is selected.
- Include an energy dissipation feature in the design of the secondary clarifier influent well.

- For the purpose of fire protection and electrical hazard determination, classify the oxidation ditches and secondary clarifiers appropriately in accordance with NFPA 820 and in recognition that they are not preceded by primary sedimentation at the LOWRF.
- Provide a means to discharge scum to the Sludge Holding Tank in the event that the scum drying beds are at capacity.

3.4 LAYOUT

Preliminary layouts for the secondary treatment process were developed using the design criteria presented in Table 3.1 and previous projects of similar size and design.

3.4.1 Oxidation Ditches

There are several oxidation ditch designs available on the market today. The preliminary design for the LOWRF's secondary treatment is based on the Carrousel® oxidation ditch process. The Carrousel® design has proven to be a reliable, simple to operate process. A typical Carrousel® system designed for nitrification and denitrification is shown on Figure 3.3. As shown, the process consists of two parallel oxidation ditches, each with an upstream anoxic zone. Flow from preliminary treatment enters the influent splitter structure and is split evenly to each anoxic zone. In the anoxic zone, the influent flow is mixed with RAS and return flow from the aerobic zone using a submersible mixer. Flow from the anoxic zone is then fed to the aerobic zone. The aerobic zone is configured as a racetrack with two surface aerators located at the 180-degree bends. The surface aerators supply oxygen to the process and create flow velocity in the ditch. The flow velocity keeps a majority of the flow recirculating around the ditch for treatment. A portion of the flow equal to the influent plus RAS flow, flows over the effluent weir into the mixed liquor splitter box where the mixed liquor is split evenly to the secondary clarifiers.

3.4.2 Secondary Clarifiers

The basis of design for the LOWRF includes two circular secondary clarifiers. A typical circular secondary clarifier layout is shown on Figure 3.4. As shown, mixed liquor flows into the clarifier through the center well and is directed toward the bottom of the tank. The mixed liquor then slowly rises toward the effluent weir allowing the flocculated MLSS to settle to the bottom of the clarifier, creating the secondary effluent and RAS. Secondary effluent flows over the effluent weir and is directed to tertiary treatment. The RAS is collected at the floor of the clarifier by the hydraulic suction mechanism and directed to the RAS/WAS pump station.

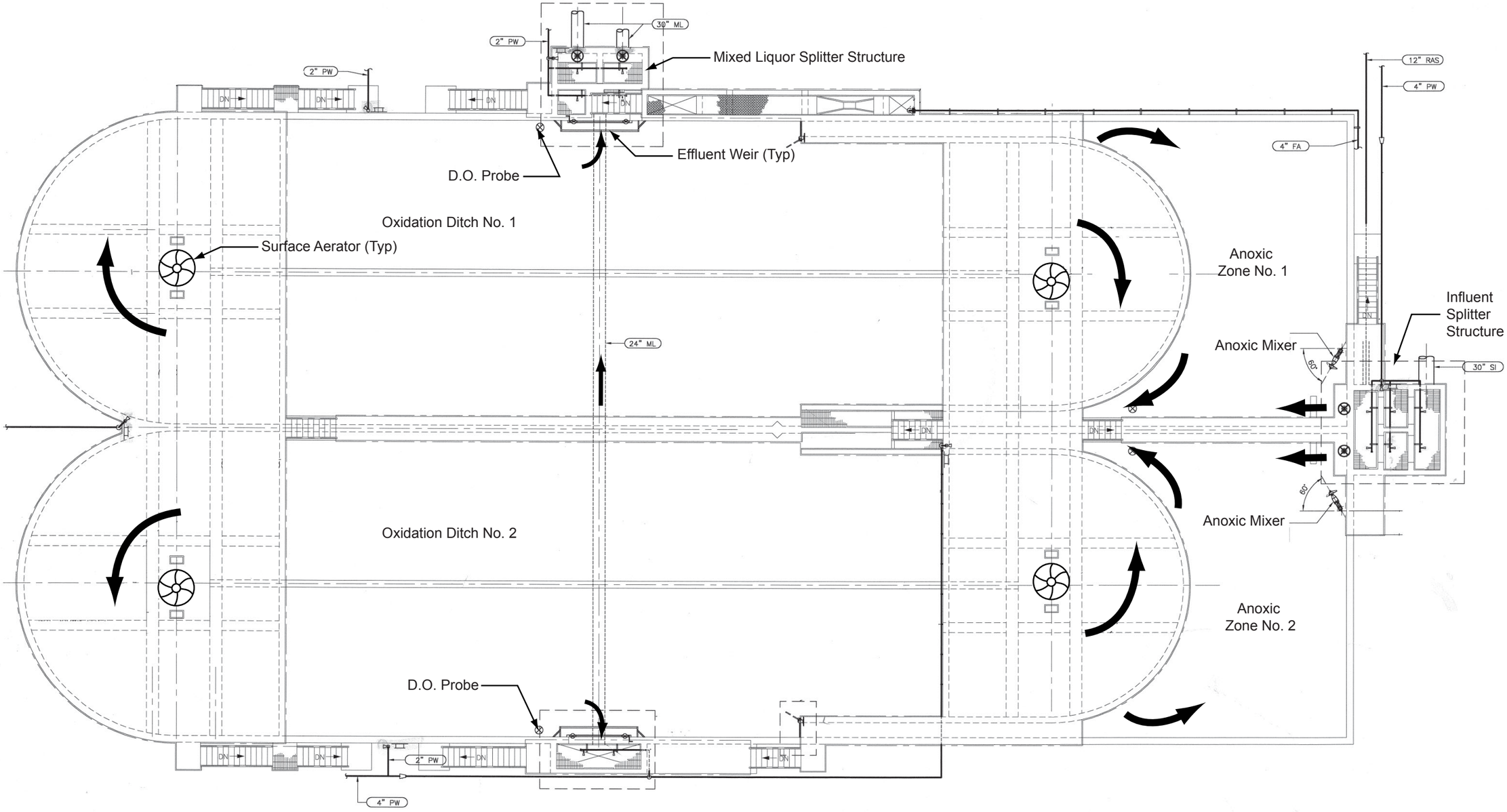

CARROUSEL® OXIDATION DITCH LAYOUT

FIGURE 3.3

86-SanLuisObispo9-12F3.3-8930A10.ai

carollo
Engineers...Working Wonders With Water™

COUNTY OF SAN LUIS OBISPO

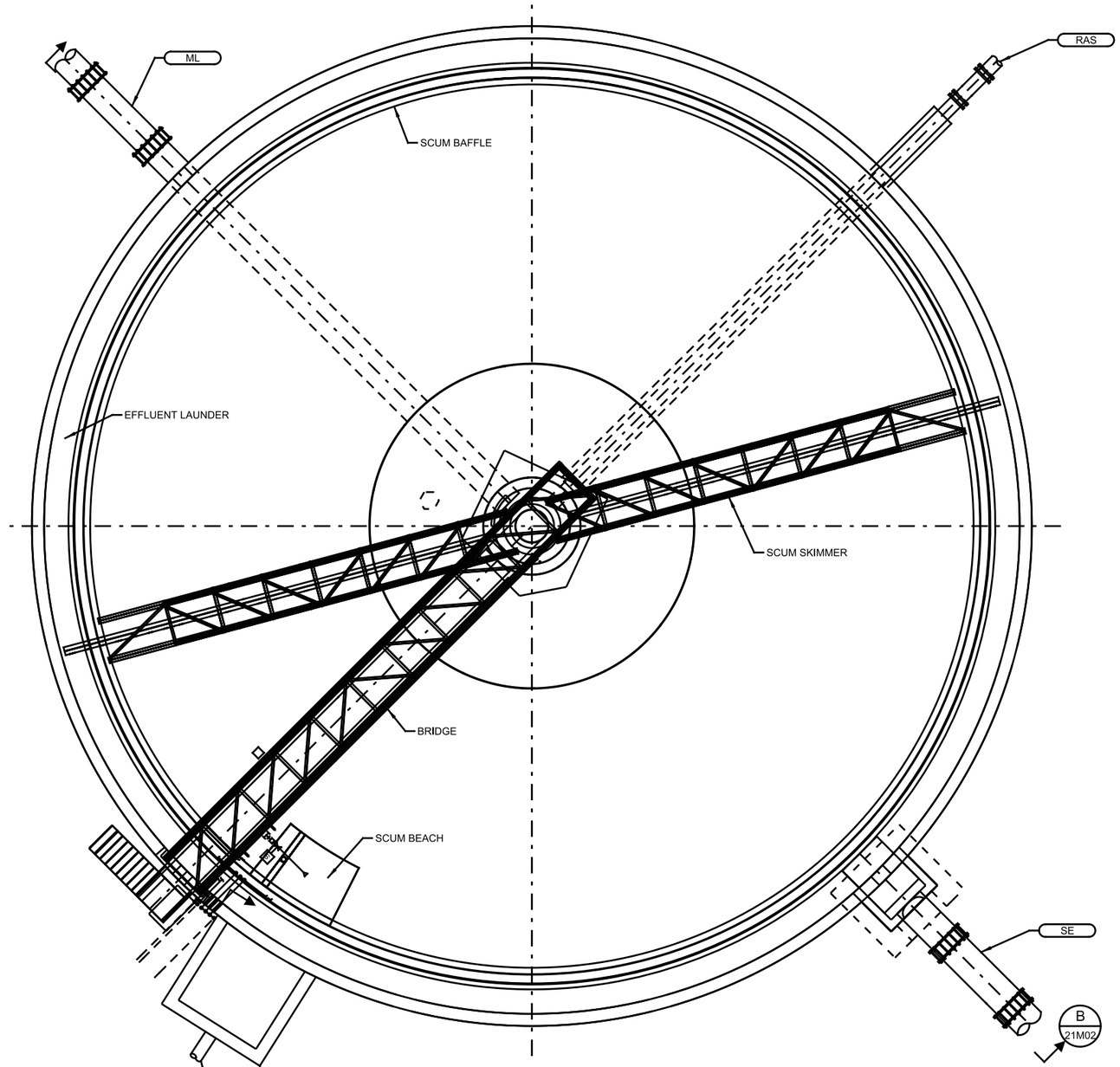

A **PLAN**
SCALE: 1/4" = 1'-0"
FILE: 8930A10-21M01

SECONDARY CLARIFIER LAYOUT

FIGURE 3.4

86-SanLuisObispo9-12F3.4-8930A10.ai

carollo
Engineers...Working Wonders With Water™

COUNTY OF SAN LUIS OBISPO

3.4.3 RAS/WAS Pump Station

The basis of design for the LOWRF includes three RAS/WAS pumps, two duty and one standby. A typical RAS/WAS pump station layout is shown on Figure 3.5. The three RAS/WAS pumps are installed either at grade or in a vault and are connected to a common suction header as well as a common discharge header. The suction header valves are configured to allow the middle pump to withdraw sludge from either clarifier if one of the "outside" pumps is out of service. The pump discharge can be sent either back to the oxidation ditch as RAS or wasted to solids treatment as WAS.

3.5 CONTROL NARRATIVES

Preliminary control narratives were developed for each secondary treatment process. The control narratives are intended to describe the automatic control philosophy of the secondary treatment equipment.

3.5.1 Oxidation Ditches

Each of the oxidation ditches has one submersible mixer, two surface aerators, and one dissolved oxygen probe. The submersible mixer is a constant speed mixer and is in service when the associated oxidation ditch is online. The primary function of the oxidation ditch is to provide the oxygen required for BOD and nutrient removal. Oxygen is provided by two surface aerators. One of the surface aerators operates at a constant speed when the oxidation ditch is online. The second surface aerator operates on a variable frequency drive (VFD) to control oxygen levels in the ditch. The speed of the surface aerator is adjusted based on an operator adjustable dissolved oxygen setpoint as measured by a dissolved oxygen probe near the effluent weir of the oxidation ditch.

3.5.2 Secondary Clarifiers

The secondary clarifiers at the LOWRF operate continuously while in service. A minimum of one clarifier is in service when the plant is online.

For each clarifier, a skimming arm is connected to the clarifier drive. The skimming system continuously collects the secondary scum and deposits it into the scum collection trough. When the skimming arm approaches the scum trough, a limit switch is activated. This switch opens a solenoid valve to allow plant water to flush accumulated scum into the scum collection wet well. When the level in the scum collection wet well reaches a high level as indicated by a float switch, a submersible pump will pump scum to the scum drying beds. When the level in the scum collection reaches a low level as indicated by a float switch, the scum pump will shutdown. Additionally, high high and low low water levels will be alarmed at the supervisory control and data acquisition (SCADA) system. The low low alarm will shut down the scum pump in all modes of operation.

3.5.3 RAS/WAS Pumping

There are three centrifugal RAS/WAS pumps that serve the secondary clarifiers at the LOWRF. RAS is drawn from the bottom of each secondary clarifier by a dedicated RAS/WAS pump and pumped to the oxidation ditch influent splitter structure or WAS storage. The total RAS rate is determined by an operator adjustable set point. This set point can be based on total RAS flow, total RAS volume, or a percentage of the plant influent flow. When total RAS flow is determined by the programmable logic controller (PLC), this value is divided between the number of clarifiers online to determine the RAS flow per clarifier. The speed of the dedicated RAS pumps is varied to meet this flow rate as indicated by magnetic flow meters on the RAS suction lines from the individual clarifiers.

The discharge of the RAS/WAS pumps can be sent to two locations: the oxidation ditch influent splitter structure and WAS storage. The split to each location is determined by the amount of sludge that needs to be wasted. The amount of wasting required is equal to the pounds per day of sludge produced in the oxidation ditch. A motor-operated plug valve is opened to allow a portion of the flow to the sludge holding tanks. The remaining flow is returned to the oxidation ditch. The pounds of sludge wasted is calculated based on the WAS flow rate as measured by a magnetic flowmeter on the WAS line, total time of wasting, and the RAS concentration. When the desired amount of wasting is achieved, the motor operated plug valve is closed and all RAS flow is returned to the oxidation ditch.

3.6 UTILITIES

Support utility services needed at the secondary treatment facilities include utility water (UW) and electricity.

3.6.1 Utility Water

UW is also referred to as plant water. Standard hose bibs shall be provided around the perimeter of the secondary facilities for general washdown. UW may be required to support the following process areas:

- Spray water for the oxidation ditch influent splitter structure and the mixed liquor splitter structure.
- Spray water for the scum collection system at the secondary clarifiers.
- Seal water for the RAS/WAS pumps.

3.6.2 Electricity

Exterior electrical outlets shall be provided at or near the mechanical equipment to facilitate operations and maintenance activities.

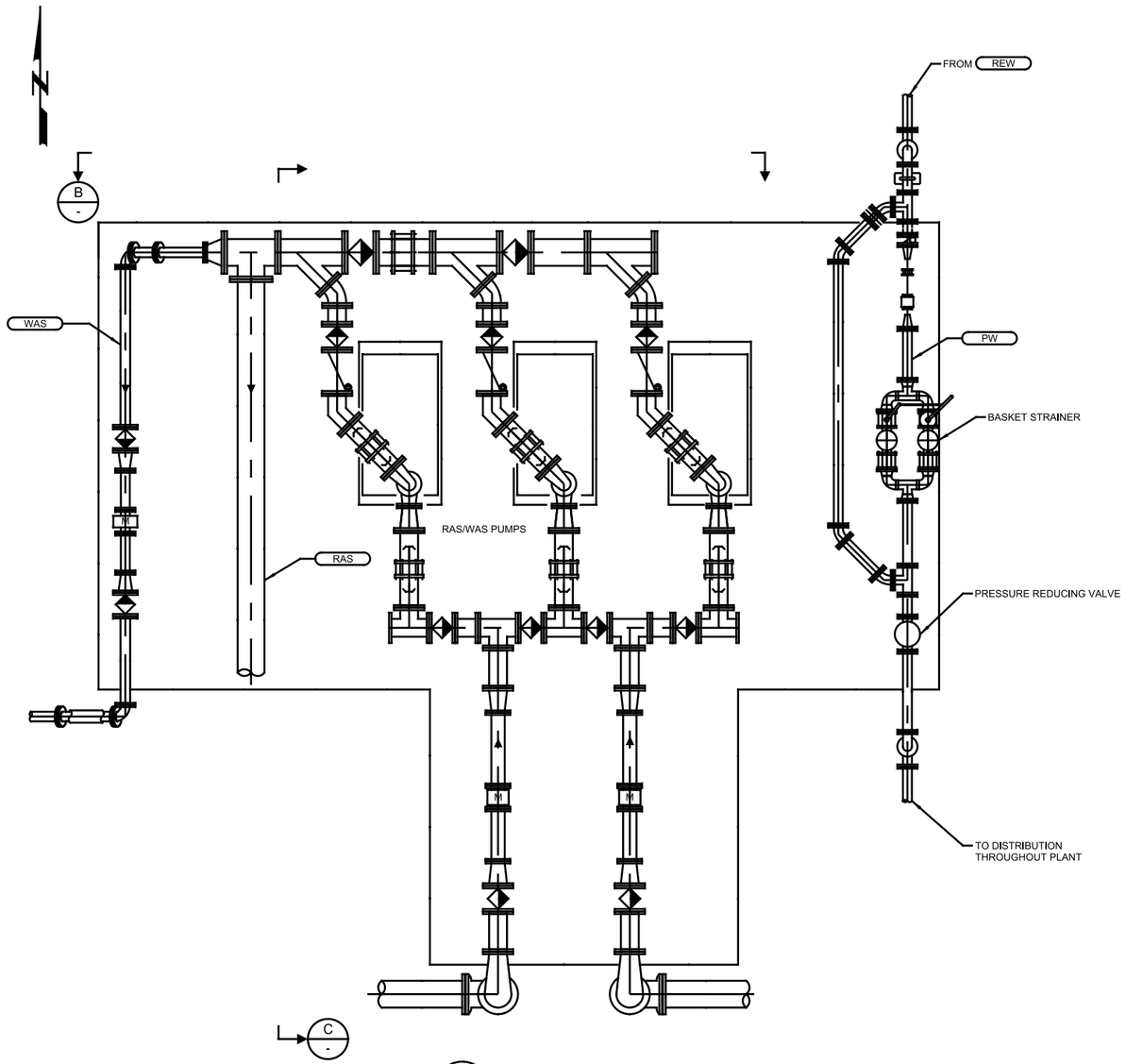

A PLAN
SCALE: 3/4" = 1'-0"
FILE: 8930A10-22-M-0101

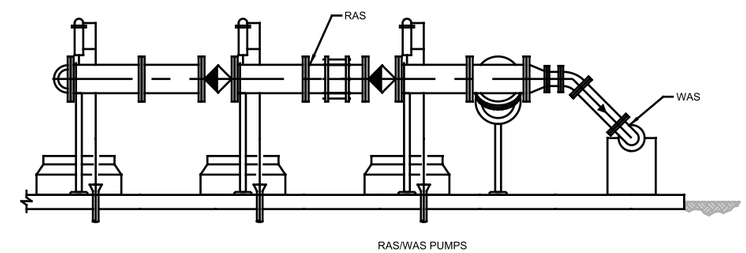

B SECTION
SCALE: 3/4" = 1'-0"
FILE: 8930A10-22-M-0301

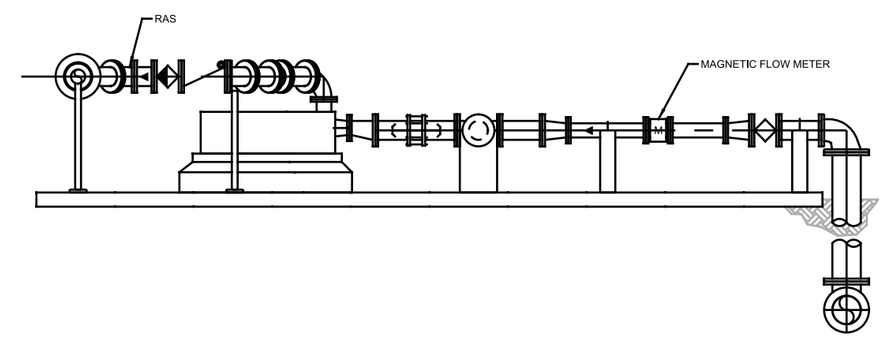

C SECTION
SCALE: 3/4" = 1'-0"
FILE: 8930A10-22-M-0302

RAS/WAS PUMP STATION LAYOUT

FIGURE 3.5

86-SanLuisObispo9-12F3.5-8930A10.ai

carollo
Engineers...Working Wonders With Water™

COUNTY OF SAN LUIS OBISPO

TERTIARY TREATMENT

4.1 PURPOSE

The purpose of this chapter is to identify the necessary tertiary treatment processes at the San Luis Obispo County's (County) proposed Los Osos Water Recycling Facility (LOWRF) and to describe their preliminary design criteria. The water quality objective of the tertiary treatment processes is to meet California's Title 22 regulatory requirements for unrestricted recycled water reuse. The following guideline documents are referenced in this chapter:

- National Water Research Institute (NWRI) and American Water Works Association Research Foundation (AwwaRF), *Ultraviolet Disinfection: Guidelines for Drinking Water and Water Reuse*, 2nd ed., 2003.
- California Department of Public Health (CDPH), *Regulations Related to Recycled Water*, January 2009.

4.2 PROCESS OVERVIEW

The tertiary treatment facilities described in this chapter will enable the LOWRF to consistently produce plant effluent that meets the California Water Recycling Criteria (Title 22). Production of such waters provides the flexibility to discharge the effluent to leach-fields or distribute it to off-site recycled water users. The required tertiary treatment consists of filter influent pumping, coagulant addition, filtration, and disinfection. More specifically, after being pumped, the secondary effluent will be chemically conditioned with a coagulant on an as-needed basis to enhance and optimize filter performance. The flow will then be routed through disk-type tertiary filters to reduce turbidity and suspended solids. Downstream of filtration, ultraviolet (UV) reactors will provide disinfection. Following disinfection, the final effluent flows to the effluent storage pond(s) by gravity. Sodium hypochlorite solution (SHS) is injected downstream of the effluent pumps as the recycled water is conveyed off-site or distributed for in-plant use.

4.3 DESIGN CRITERIA

Through the efforts completed to date as part of the preliminary design development and the preceding engineering tasks, a number of specific parameters and processes have been evaluated, vetted, and validated. The criteria listed in the subsequent table are identified as "fixed" criteria or a "baseline" design assumption. **The fixed criteria represent specific parameters that are not anticipated to be revised as design progresses, based on the evaluation and vetting efforts completed to date, without additional justification, or as a result of currently unforeseen changes.** As such, the design/build (D/B) team is expected to assume these criteria to be fixed through the remainder of the

design phase efforts. However, it should be noted that some of the fixed criteria may be revisited if financial reasons dictate changes to the overall design (i.e., should the subsequent cost estimates exceed the project budget).

Other criteria are identified as “baseline” design assumptions, which represent the preliminary parameters used by Carollo as part of the initial design definition efforts but that are not specifically fixed at this point in the design process. These “baseline” criteria are expected to be further evaluated and adjusted by the D/B team and the County, as design progresses. It is anticipated that innovation, value engineering, and general preferences by the D/B team may result in proposed variations to some of the baseline design assumptions presented herein.

4.3.1 Specific Design Criteria

Table 4.1 summarizes the design criteria of the tertiary treatment facilities conceptualized during preliminary design. Basic process flow diagrams for the filter influent pump station, tertiary filters, disinfection, and associated chemical systems are shown on Figure 4.1, Figure 4.2, Figure 4.3, and Figure 4.4, respectively.

Table 4.1 Design Criteria Summary – Tertiary Treatment San Luis Obispo County

Design Parameter	Unit	Criterion/ Value	Criteria Intention: “Fixed” Criteria for D/B Team	Criteria Intention: “Baseline” Design Assumption
FILTER INFLUENT PUMPING				
Type of pumps	-	Submersible Non-Clog		X
Number of pumps				
Duty	-	2	X	
Standby	-	1	X	
Speed control	-	VFD	X	
COAGULATION				
Type	-	Pump Mix	X	
Coagulation Feed				
Flows(1)	mgd			
Minimum		0.3		X
Maximum month		1.77		X
Peak day		2.37		X
Peak hour		3.94		X
Coagulant type(2)	-	Aluminum- and/or polymer-based solution	X	

Table 4.1 Design Criteria Summary – Tertiary Treatment San Luis Obispo County

Design Parameter	Unit	Criterion/ Value	Criteria Intention: "Fixed" Criteria for D/B Team	Criteria Intention: "Baseline" Design Assumption
Number of pumps (duty+standby)	-	2 (1+1)	X	
Pump type	-	Peristaltic or gear pumps	X	
Pump capacity, each	gph	4.3		X
Coagulant Storage				
Type	-	tote		X
On-site volume[3]	days	21	X	
	gal	780		X
Number of totes installed		1		X
Additional totes stored		2		X
Coagulant Dosage and Feed Rates				
Chemical dosages				
Maximum	mg/L	25	X	
Average	mg/L	10	X	
Minimum	mg/L	5	X	
Feed rates				
Maximum (at PHWWF)	gph	3.4		X
Average (at ADWWF)	gph	0.6		X
Minimum (at start-up flows)	gph	0.05		X
Coagulant Chemical Properties				
Form delivered	-	Liquid		X
Solution strength	%	24		X
Specific gravity	-	1.24		X
Coagulant Feed/Blending				
Number of units				
Duty		1	X	
Standby	-	1	X	
Pump type	-	Peristaltic or gear pumps[4]	X	
Pump capacity, each	gph	3.4		X

Table 4.1 Design Criteria Summary – Tertiary Treatment San Luis Obispo County

Design Parameter	Unit	Criterion/ Value	Criteria Intention: "Fixed" Criteria for D/B Team	Criteria Intention: "Baseline" Design Assumption
Coagulant Piping and Materials				
Piping	-	Per Pipe Schedule in Technical Memoranda, Appendix C	X	
Valves	-	Ball		X
Gaskets	-	EPDM		X
FILTRATION				
Type of system	-	Disk filter		X
Type of tank	-	Painted steel		X
Flows(1)	mgd			
Minimum		0.3		X
Maximum Month		1.77		X
Peak Day		2.37		X
Peak Hour		3.94		X
Minimum number of units	-			
Duty		1	X	
Standby		1	X	
Maximum loading rate(5)	gpm/ft^2	75% of CDPH approval	X	
Maximum backwash	% of throughput	5	X	
Filter drive, each	hp	3/4		X
Backwash pump, each	hp	5		X
Effluent quality				
Average (24-hr period)	NTU	2	X	
Peak (<5% within 24-hr period)	NTU	5	X	
Instantaneous Maximum	NTU	10	X	
DISINFECTION				
Type of system	-	UV	X	
Pressure	-	Low	X	
Configuration(6)	-	Closed vessel or open channel	X	

Table 4.1 Design Criteria Summary – Tertiary Treatment San Luis Obispo County

Design Parameter	Unit	Criterion/ Value	Criteria Intention: "Fixed" Criteria for D/B Team	Criteria Intention: "Baseline" Design Assumption
Flows[1]	mgd			
Minimum[7]		0.3		X
Maximum Month		1.77		X
Peak Day		2.37		X
Peak Hour		3.94		X
Minimum number of trains	-			
Duty		2	X	
Standby		1	X	
Minimum UV dose [8]	mJ/cm^2			
Peak Day		120	X	
Peak Hour		100	X	
Minimum wastewater UV transmittance at 253.7 nm	%	55	X	
Lamp life factor	-	0.8	X	
Fouling factor	-	0.85	X	
Flow measurement[9]	per train	1	X	
CHLORINE RESIDUAL				
Irrigation Flows[1]	mgd			
Minimum		0.3		X
Maximum Month		1.77		X
Peak Hour		3.94		X
Chemical	-	Bulk SHS	X	
Minimum residual at the furthest distribution point	mg/L	0.5	X	
Storage				
Number of bulk storage tanks	-	1		X
Tank capacity	gal	2,900		X
Storage volume required	days	21	X	
	gal[3]	2,610		X
Tank material of construction	-	FRP	X	
Dosage and Feed Rates				
Dosages				
Maximum	mg/L	8		X
Average	mg/L	4		X

Table 4.1 Design Criteria Summary – Tertiary Treatment San Luis Obispo County

Design Parameter	Unit	Criterion/ Value	Criteria Intention: "Fixed" Criteria for D/B Team	Criteria Intention: "Baseline" Design Assumption
Feed Rates				
Minimum	gph	0.4		X
Maximum	gph	8.5		X
Chemical Properties				
Form delivered	-	Liquid		X
Minimum solution strength	%	10	X	
Specific gravity	-	1.21	X	
Feed Pumps				
Number of pumps (duty+standby)	-	3 (2+1)	X	
Pump type	-	Peristaltic or gear pumps	X	
Pump capacity, each	gph	4.3		X
Piping and Materials				
Piping	-	Per Pipe Schedule	X	
Valves	-	Ball (vented)		X
Gaskets	-	Viton		X

Notes:
(1) Estimated flows include plant drains and process recycle streams. Minimum flow indicated includes makeup plant water flow of 210 gpm to sustain UV operation during periods of low or no influent flow.
(2) Ferric-based coagulants are not acceptable.
(3) Volume calculated is based on maximum month flows and peak dosage.
(4) Assumes use of an aluminum-based coagulant. If using a polymer-based coagulant, polymer blender type shall be provided.
(5) Based on peak hour flow and using the specified percentage of the maximum permissible flow rate for each system's specific California Water Recycling Criteria (Title 22) condition of approval.
(6) System shall comply with the California Water Recycling Criteria (Title 22) as prescribed by the NWRI/AwwaRF guidelines.
(7) System must be designed to handle sustained durations at minimum flow without exceeding the manufacturer's allowable lamp temperature.
(8) Proof of third-party MS2 bioassay validation testing per NWRI/AwwaRF guidelines must be submitted to the County for approval. Minimum dosage assuming lamps at the end of lamp life, with fouled sleeves, and minimum UV transmittance.
(9) Provide computational dynamic modeling results confirming piping design facilitates equal flow split (within 5 percent) between parallel trains for County approval.

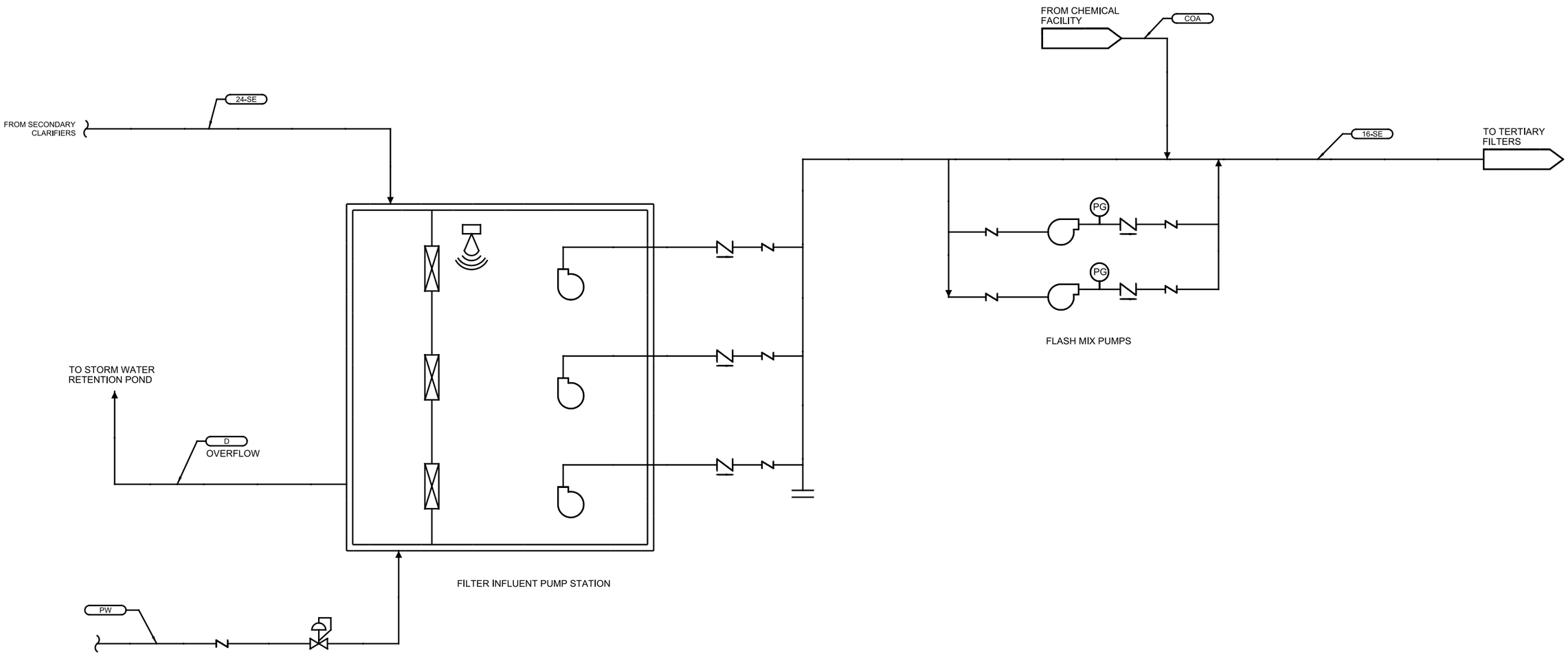

FILTER INFLUENT PUMP STATION PROCESS FLOW DIAGRAM

FIGURE 4.1

86-SanLuisObispo9-12F4.1-8930A10.ai

carollo
Engineers...Working Wonders With Water™

COUNTY OF SAN LUIS OBISPO

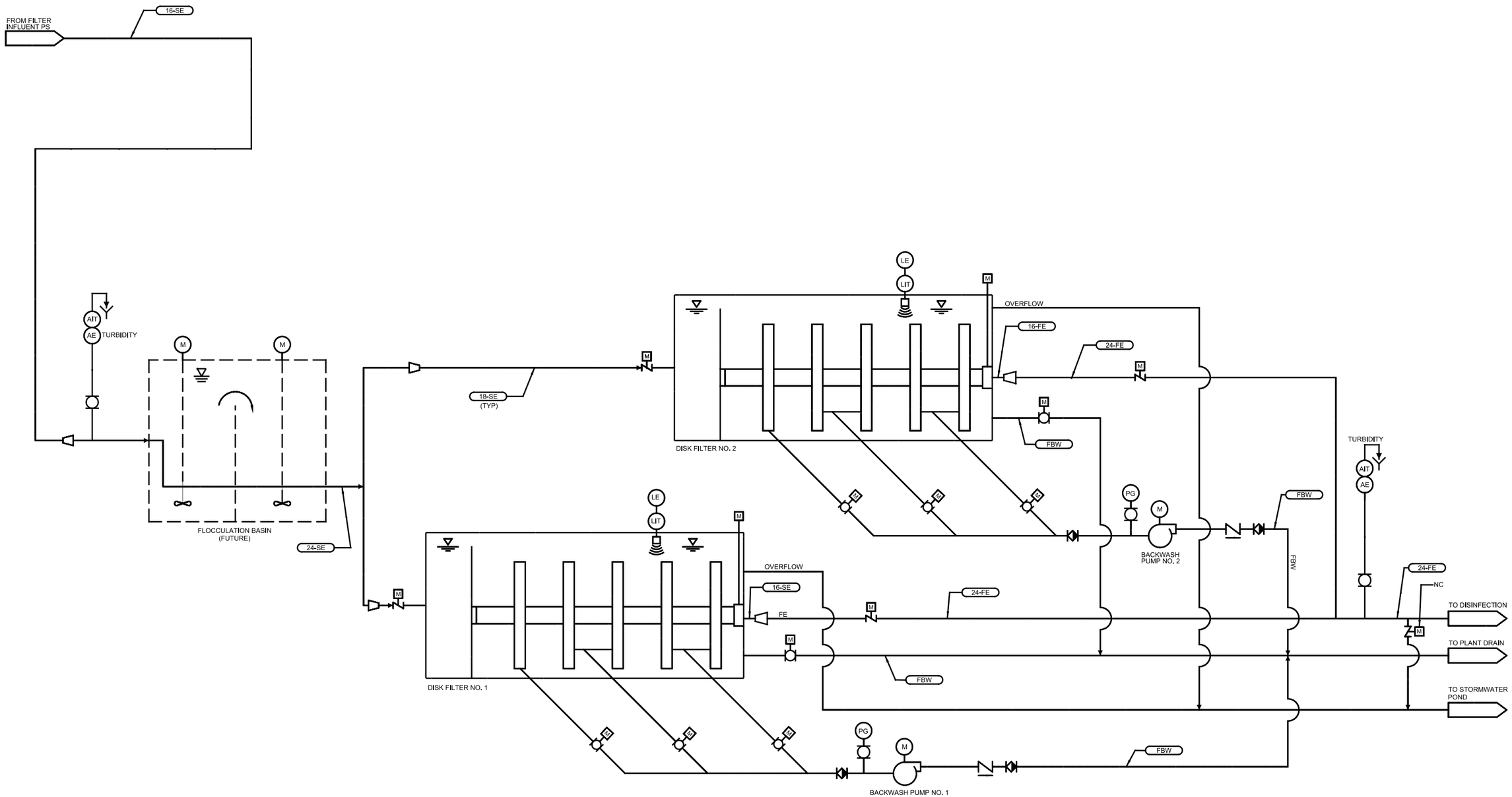

TERTIARY FILTER PROCESS FLOW DIAGRAM

FIGURE 4.2

86-SanLuisObispo9-12F4.2-8930A10.ai

carollo
Engineers...Working Wonders With Water™

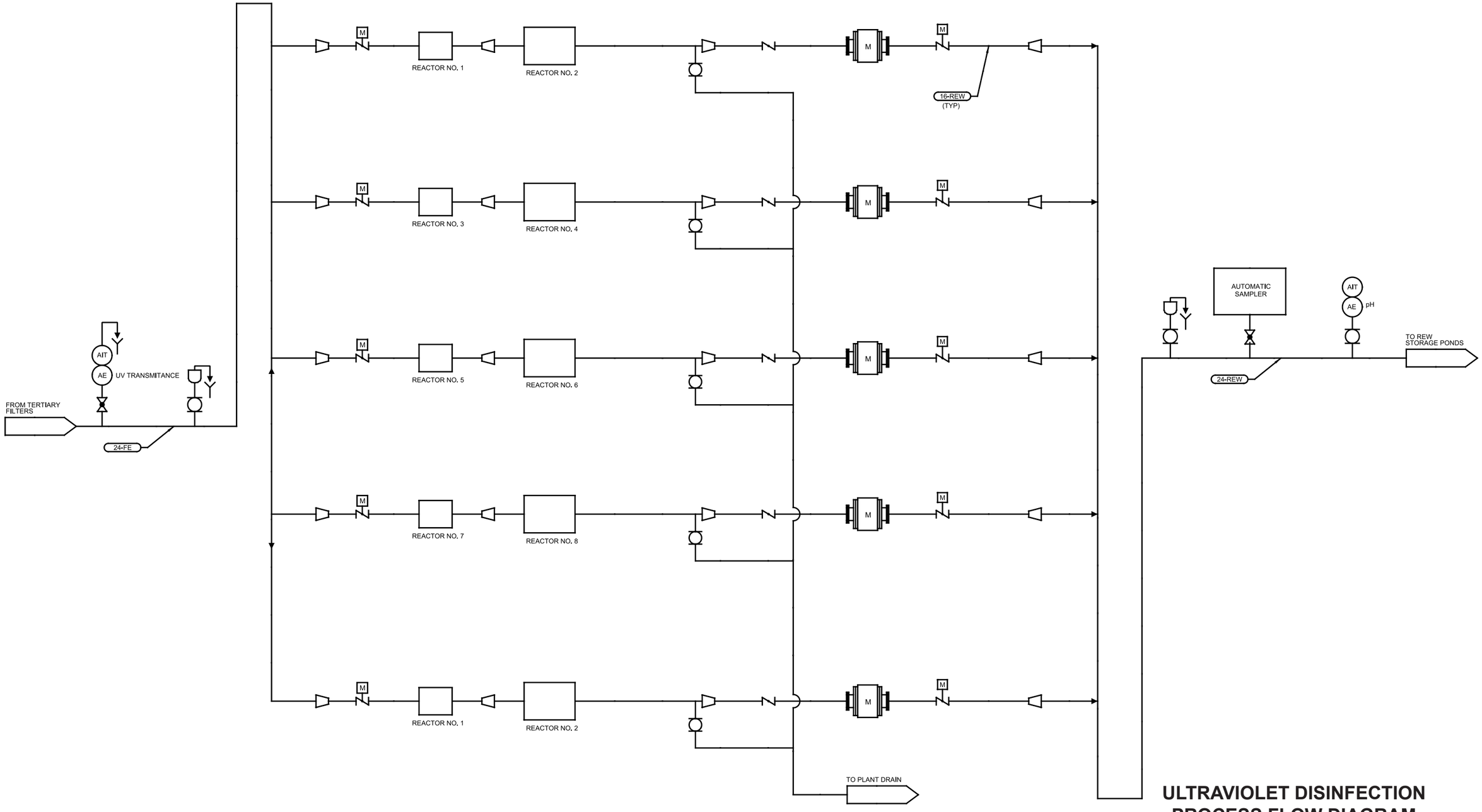

ULTRAVIOLET DISINFECTION PROCESS FLOW DIAGRAM

FIGURE 4.3

86-SanLuisObispo9-12F4.3-8930A10.ai

carollo
Engineers...Working Wonders With Water™

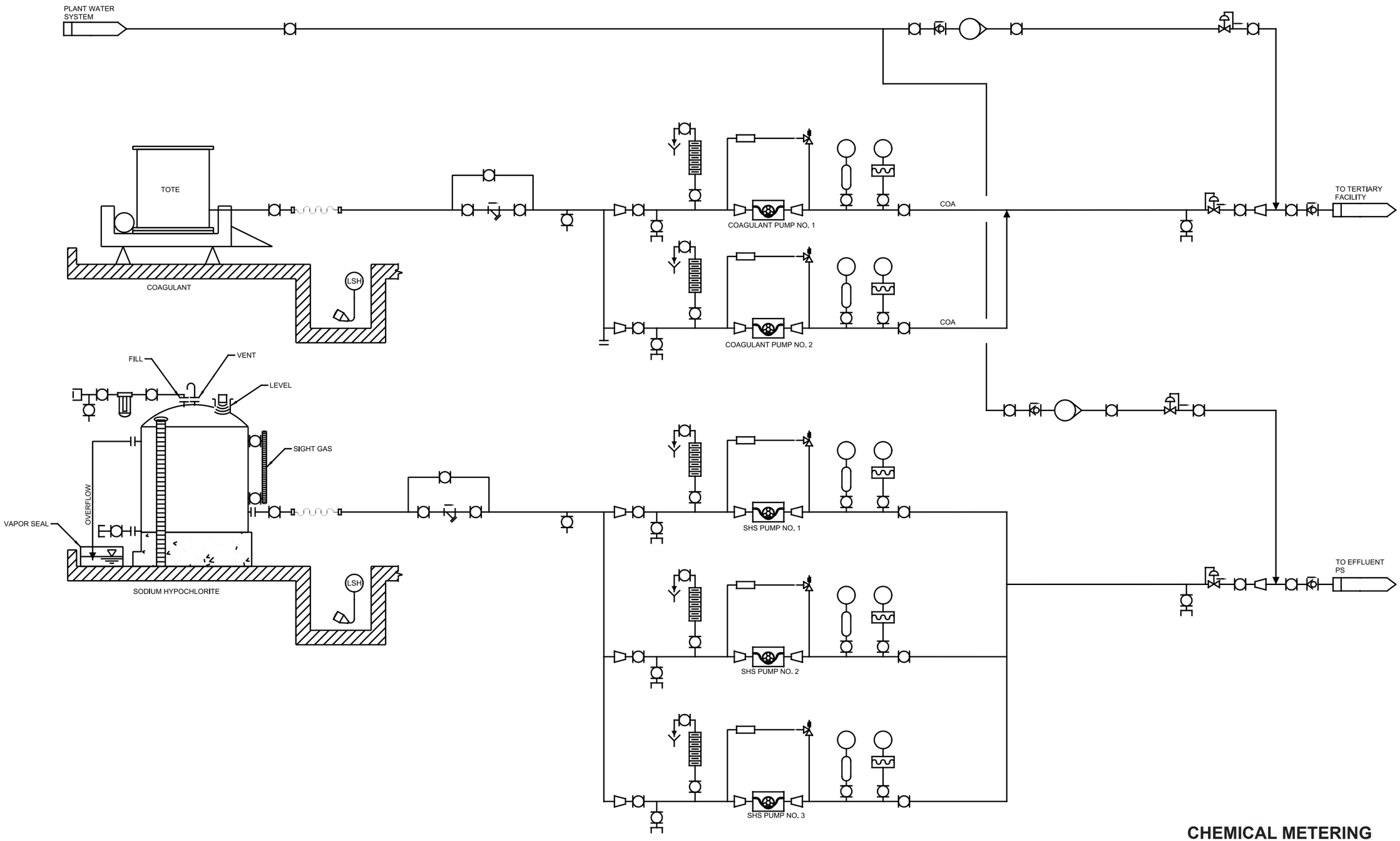

CHEMICAL METERING PROCESS FLOW DIAGRAM

FIGURE 4.4

86-SanLuisObispo9-12F4.4-8930A10.ai

carollo
Engineers...Working Wonders With Water™

COUNTY OF SAN LUIS OBISPO

4.3.2 Design Considerations

This section summarizes the important non-quantitative criteria for the tertiary treatment facilities that should be considered by the designer during the D/B phase of the project. The design shall:

- Be based on tertiary processes capable of receiving California Water Recycling Criteria (Title 22) conditional approval for tertiary disinfected recycled water.
- Protect the tertiary filters from premature chemical fouling by confirming the coagulant dispersion design provides for complete mixing through the range of anticipated flows and dosages.
- Provide footprint and hydraulic grade line flexibility to allow the County to install flocculation basins in the future if needed.
- Automatically divert the plant flow at the tertiary filters in the event that the LOWRF produces water that does not meet the minimum treatment or water quality criteria set forth by CDPH for tertiary disinfected recycled water. Diversion should strategically protect the recycled water distribution system from contamination to the greatest extent practical.
- Remain within the UV manufacturer's recommended operating lamp temperatures over the full range of anticipated flows and during start-up. The piping design shall provide equal flow distribution between the parallel UV system trains.
- Provide an "infrastructure decontamination" procedure (to be approved by CDPH). Once recycled water distribution piping has been used to convey non-compliant water, the "contaminated" section of piping shall undergo disinfection with SHS prior to returning to recycled water service.
- Provide a composite effluent sampler for conducting water quality analyses. The sampling point for the sampler should be located immediately downstream of the UV system.
- Facilitate open working space to support operations and maintenance (O&M) activities. Access for maintenance (working space) shall accommodate the following at a minimum:
    - 48 inches of open space above the filter tank platform
    - 24 inches of open space plus length of UV lamp for the direction of lamp orientation
    - 36 inches of open space perpendicular to UV lamp orientation on either side of the reactor
    - 36 inches of open space around other rotating mechanical equipment
- Install motorized overhead crane(s), as appropriate, to facilitate maintenance of equipment such as the UV reactors.

4.4 LAYOUT

Preliminary layouts for the tertiary treatment process were developed using the design criteria described in Table 4.1 and previous projects of similar size and design. The filtration, disinfection, and chemical storage areas shall each be covered with a canopy.

4.4.1 Coagulation

A pump mix system shall be installed to promote chemical dispersion immediately downstream of the coagulant injection point. Refer to Future Considerations section for discussion on flocculation.

4.4.2 Filtration

The disk filtration system removes coagulated suspended solids from the secondary effluent stream. Each pre-engineered package filter tank contains a series of circular disk elements covered with a specialized media and mounted on a central shaft. The media provides filtration by trapping particulates within its interior as well as forming a particulate layer upon its outer surface. Water passing through the media collects in a center tube connected to the effluent chamber. For the purpose of the preliminary design layout, a single duty and redundant filter are assumed. Plan and section views of a disk filtration system are provided on Figure 4.5.

4.4.3 Disinfection

CDPH has conditionally approved installations with closed vessel and open channel style low-pressure high output (LPHO) UV disinfection systems for tertiary disinfected recycled water. For the purpose of the preliminary design layout and to meet the required flow requirements, five parallel trains (four duty and one standby) is assumed with two reactors in series per train. Support electrical infrastructure for the UV system is assumed to be housed in the nearby Electrical Building.

Plan and section views of a closed vessel style system are included as Figure 4.6. Each closed-vessel UV reactor shall include 1) a stainless steel disinfection chamber, 2) UV lamps mounted horizontally and parallel or perpendicular to flow, 3) automatic quartz sleeve cleaning system, and 4) a steel cabinet for controls equipment. Each chamber includes integral flow distribution baffles to prevent the formation of hydraulic dead zones and access hatches for visual lamp/sleeve maintenance and/or removal of foreign debris from the chamber.

4.4.4 Chemical Area

Chemical usage for the tertiary system includes a coagulant and SHS. When needed, the coagulant will be injected into the secondary effluent downstream of the filter influent pump station. SHS (nominal 12.5 percent) will be used to maintain a chlorine residual in the plant

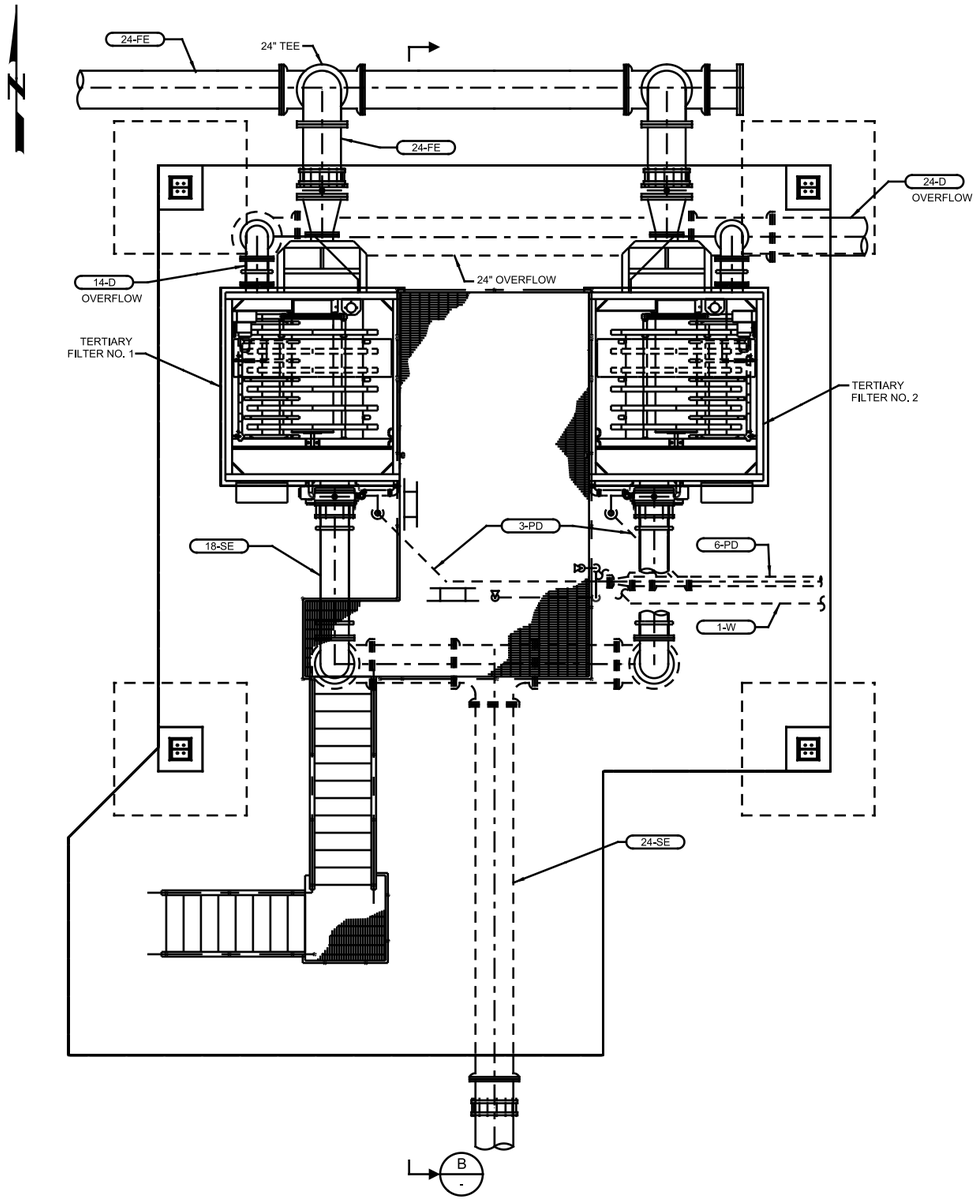

A **PLAN**
SCALE: 1/4" = 1'-0"
FILE: 8930A10-30-M-0102

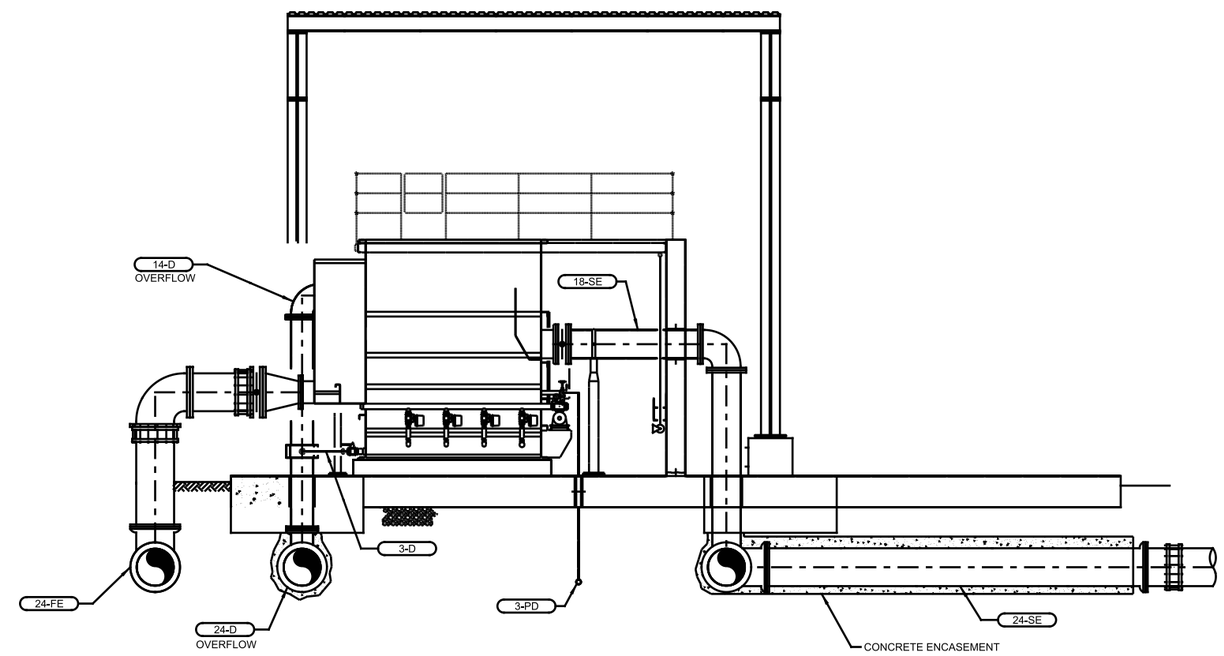

B **SECTION**
SCALE: 1/4" = 1'-0"
FILE: 8930A10-30-M-0302

TERTIARY FILTER PLAN AND SECTION

FIGURE 4.5

carollo
Engineers...Working Wonders With Water™

36-SanLuisObispo9-12F4.5-8930A10.ai

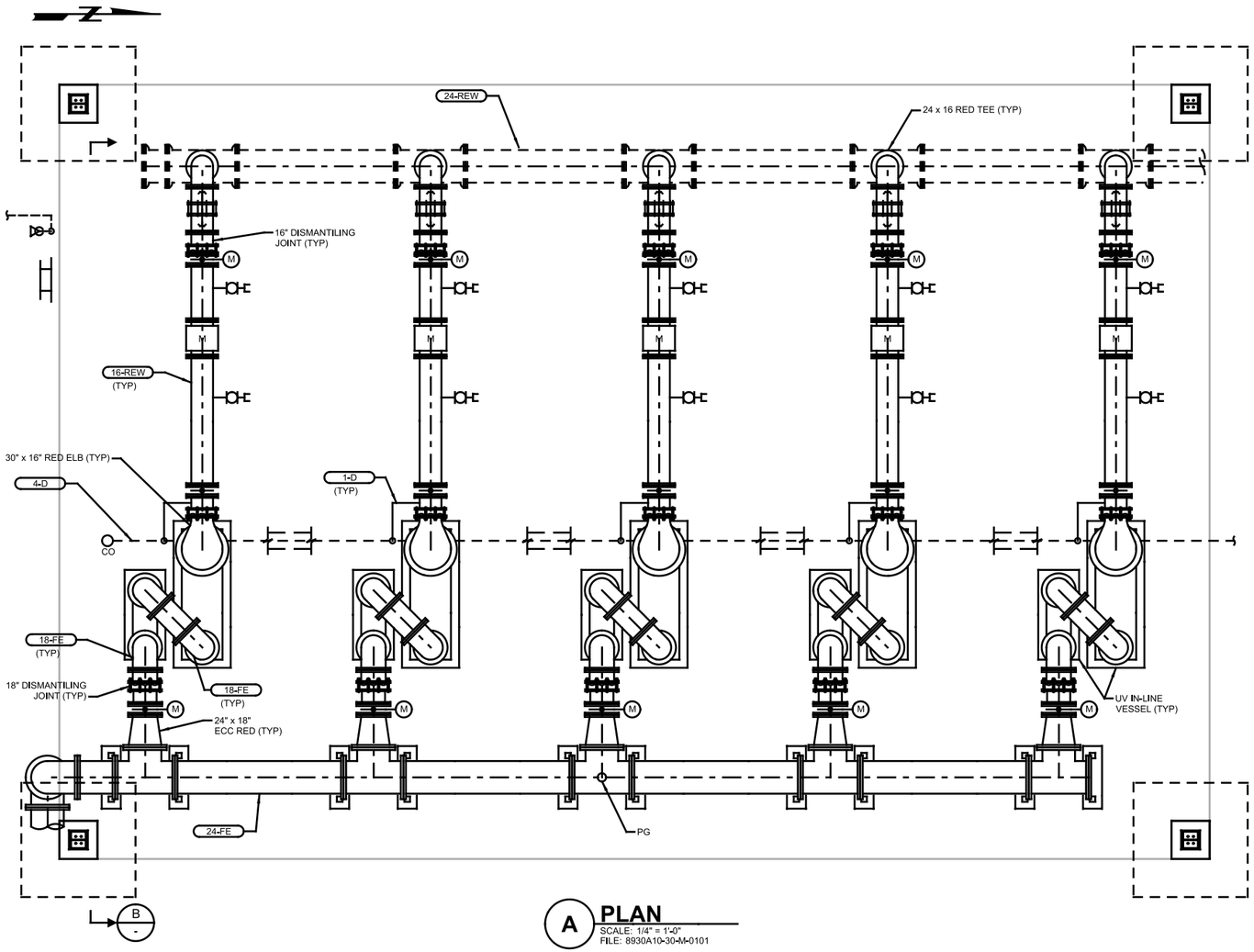

A **PLAN**
SCALE: 1/4" = 1'-0"
FILE: 8930A10-30-M-0101

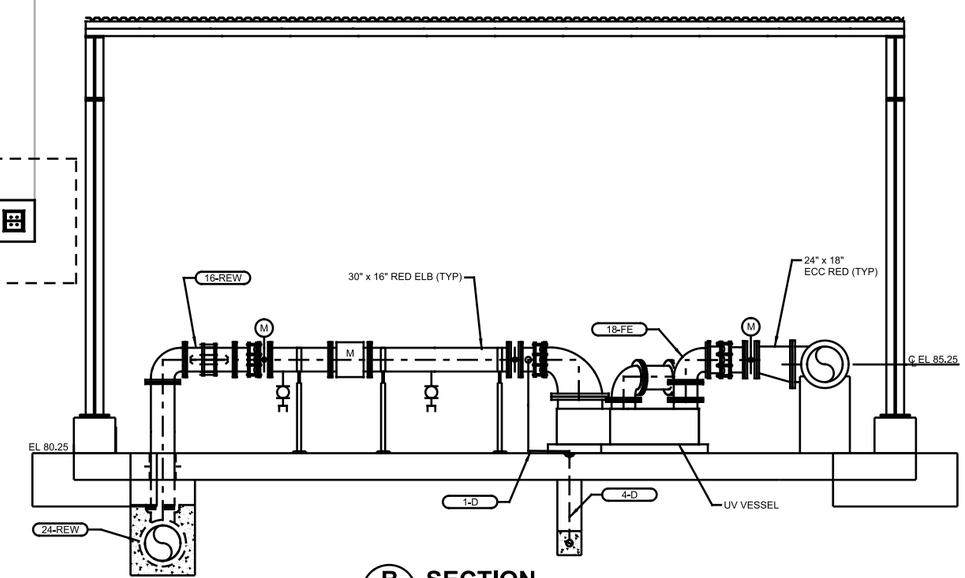

B - **SECTION**
SCALE: 1/4" = 1'-0"
FILE: 8930A10-30-M-0301

UV DISINFECTION PLAN AND SECTION

FIGURE 4.6

86-SanLuisObispo9-12F4.6-8930A10.ai

carollo
Engineers...Working Wonders With Water™

COUNTY OF SAN LUIS OBISPO

utility water (UW) and throughout the recycled water distribution system. The coagulant will be delivered in totes, and the SHS will be delivered in bulk to an on-site storage tank.

4.5 CONTROL NARRATIVES

This section provides a preliminary control narrative for each of the tertiary treatment processes. The control narrative describes how the system is intended to be controlled during normal operating conditions. In general, equipment and processes would be in the remote automatic mode, and the Plant programmable logic controller (PLC) would control them via supervisory control and data acquisition (SCADA).

4.5.1 Filter Influent Pumping

The filter influent pumps will be equipped with variable frequency drives (VFDs). The pumps will be operated in a lead/lag/standby configuration. In normal operation, the pumps will be operated to maintain a constant level in the wet well of the pump station.

In the event of production of out-of-compliance filter effluent due to turbidity, the filter influent pumps will shut down automatically to divert the secondary effluent to the storm water retention pond via an overflow pipe.

4.5.2 Coagulation

It is anticipated that coagulation will not be normally required or utilized at the LOWRF. As defined by CDPH, “coagulation need not be used as part of the treatment process provided that the filter effluent turbidity does not exceed 2 NTU, the turbidity of the influent to the filters is continuously measured, the influent turbidity does not exceed 5 NTU for more than 15 minutes, and never exceeds 10 NTU, and that there is the capability to automatically activate chemical addition or divert the wastewater should the filter influent turbidity exceed 5 NTU for more than 15 minutes.” Once activated, coagulant will be automatically added to the secondary effluent using flow paced chemical metering pumps and dispersed through a static mixer.

Coagulant metering pumps are provided in a duty-standby configuration. The duty-standby assignments are automatically alternated based on pump run times. The feed rate algorithm is flow paced using the combined UV system flow rate. The dosage controller uses feedback from the filter effluent turbidity analyzer to trim the dosage as appropriate. The time lag (operator adjustable) between the metering pump and the actual mixing of coagulant solution with recycled water is incorporated into the flow pacing control logic.

The weight of the coagulant tote is continuously monitored at the PLC and compared to operator inputted low and low low setpoints. If the tote weight falls below the low setpoint, an alarm will signal at the SCADA. If the tank level falls below the low low setpoint, a second alarm will signal at the SCADA and stop the pump in operation. A dedicated

containment area is sized to isolate the entire contents of the storage tote. A float switch alarms the PLC upon activation of a high-level setpoint at the sump level. A high high-level setpoint alarms the PLC at the containment floor level and activates a beacon at the tote. The high high-level alarm must be manually RESET at the local control panel. The volume of the drainage sump will be held until the operator initiates pumping in the field.

4.5.3 Filtration

Disk filters are capable of continuously producing filtered effluent. Each filter is equipped with motorized inlet, outlet, and backwash/sludge waste valves, backwash waste pump, filter drive, and a PLC-based local control panel supplied by the filter manufacturer. Automated functions of the system include filtration modes, backwashing modes, and sludge withdrawal modes. These automated functions are controlled by the PLC using the manufacturer-furnished programming.

4.5.3.1 Normal Operation

A tertiary filter unit is considered “in service” once the associated motorized inlet and outlet valves are fully open. Solids are removed in the disk filter system by sedimentation as well as filtration. The heavier solids settle out before reaching the filter media, and the backwash waste pump removes the settled solids through a sludge manifold at the bottom of the tank. As the secondary effluent continues to flow through the filters, solids are accumulated on and within the depth of the filter media, forming a mat. As the mat is formed, head loss through the media increases, causing the liquid level in the tank to rise.

Once the difference between the liquid in the tank and the effluent chamber reaches a preset adjustable level, the backwash cycle begins. During backwash, one or more disks rotate while backwash water, collected from the filtrate header, cleans the filter media. The frequency and duration of backwash depends on the influent feed characteristics, filtration rate, and amount of particles remaining on and within the filter after previous backwash cycles.

4.5.3.2 Flow Diversion

In the event that the LOWRF produces water that does not meet the minimum treatment or water quality criteria set forth by CDPH for tertiary disinfected recycled water, the plant flow will be automatically diverted at the tertiary filters to protect the recycled water distribution system from contamination.

- For short-term durations, the temporarily diverted water will flow by gravity to the plant’s storm water retention pond. One way to achieve this diversion is to stop the filter influent pump station and allow the level in the wet well to rise and to ultimately overflow to the storm water retention pond. Alternatively, the inlet valve for the operating filter can remain open and the outlet valve can automatically close, thereby forcing the flow through the overflow piping. The plant may reintroduce the held volume to the plant for re-treatment once the effluent returns to in-compliance status.

- When the stormwater storage pond is either unavailable or has become full, the flow may travel through the tertiary filters and the UV system (without UV treatment), and discharge to one of the recycled water storage ponds. The plant may slowly re-process the held volume to the plant for treatment following the diversion.
- For long-term durations exceeding the capacity of the recycled water storage pond, the flow shall be disposed of at either leach-field.

4.5.4 Disinfection

The UV disinfection equipment shall be a packaged control system complete with equipment and appurtenances in accordance with NWRI/AwwaRF guidelines. Automated functions are performed with the PLC provided by the UV system supplier.

4.5.4.1 Normal Operation

The UV system shall be designed to operate over the full range of anticipated flows and during start-up without overheating the lamps. The delivered dose from the UV system is calculated and adjusted based on the flow rate through the individual train, UV transmittance, and UV intensity signals. Adjustment of the power levels will compensate for lamp aging and extend the life of each lamp. Trains may be proactively placed into or out of service based on either the plant flow rate or calculated UV dosage. Parallel UV trains shall be rotated in service to balance run times between them.

Each reactor is equipped with a UV intensity monitor, providing continuous performance verification over the specified water transmission range. Each UV lamp shall be fitted with an automatic mechanical cleaning mechanism. The cleaning cycle can either be manually activated or initiate automatically based on pre-set time intervals.

4.5.4.2 Start-Up

Low-pressure UV systems operate in temperatures that range from 180 to 200 degrees Celsius. As such, each reactor requires a short period of time to reach the proper operating intensity. During this period, the associated inlet valve for the train will remain closed. At higher flow rates, the accumulated water may reach the tank overflow pipe in the operating tertiary filter and be sent to the storm water retention pond.

During normal operation, the system will proactively initiate start-up of a train in advance of it being needed to allow sufficient time for the lamps to warm up without interrupting the flow. Once the train has reached the required operating intensity and is ready to be placed into service, the UV System controls will open the inlet valve and begin treating flow.

In the event of a power outage or following an unexpected event, the inlet valve will remain closed to protect the downstream distribution system during the “restart” period. While the facility is using standby power, the standby train will be prevented from operating while all

other trains are in service. The trains will be sequentially taken off-line prior to placing the other train on-line.

4.5.4.3 Shutdown

Upon shutdown of a UV train, the inlet valve will close and the lamps will be powered off.

4.5.5 Chlorination

A residual disinfectant (SHS) will be added to the recycled water with a goal of maintaining a minimum 0.5 milligrams per liter (mg/L) chlorine residual in the distribution system using flow paced chemical metering pumps. The dosing must be established at start-up based on flow, an operator adjustable residual level (at the farthest customer site), chemical decay rate, and residence time (T) in the distribution system. The residence time in the pipe is calculated based on flow measurements from the flowmeter on the line to the distribution system and length of time to the farthest customer.

SHS metering pumps are operated in a lead/lag/standby configuration to meet the demand capacity. The lead/lag/standby assignments are automatically alternated based on pump run times. The feed rate algorithm is flow paced by the combined UV system flow rate. The dosage controller uses feedback from the residual chlorine analyzer monitoring flow leaving the site to maintain the chlorine residual level at setpoint, based on 1-minute sample interval. The lag between the metering pump and the actual mixing of chlorine solution with recycled water is incorporated into the flow pacing control logic.

Bulk SHS is delivered to an on-site storage tank. The liquid level in the tank is continuously monitored at the PLC using an ultrasonic level transmitter. If the tank level rises above the high-level setpoint, an alarm beacon will activate locally at the loading station. If the tank level rises above the high high level setpoint, an alarm siren also will activate at the loading station. A dedicated containment area is sized to isolate the entire contents of the bulk tank. The containment floor is sloped to a sump, in which a float switch is located for providing a high-level alarm at the SCADA. The volume of the drainage sump will be held until the operator initiates pumping in the field.

4.6 UTILITIES

Support utility services needed at the tertiary treatment facilities include UW, potable water, and electricity.

4.6.1 Utility Water

UW is also referred to as plant water. Standard hose bibs shall be provided around the perimeter of the tertiary facility for general washdown. UW may be required to support the following process areas:

- Spray water for the tertiary filter

- Coagulant system: 1) as carrier water downstream of the chemical metering pump, 2) periodically flushing the calibration column, and 3) manually flushing the chemical diffusers and associated piping
- SHS system: 1) periodically flushing the calibration column and 2) manually flushing the chemical diffusers and associated piping

4.6.2 Potable Water

An emergency eyewash and shower unit shall be provided at each of the individual chemical storage areas. If polymer is selected as the coagulant, potable water (downstream of the appropriate backflow prevention device) may be required for blending.

4.6.3 Electricity

Exterior electrical outlets shall be provided at or near the mechanical equipment to facilitate O&M activities.

4.7 FUTURE CONSIDERATIONS

The facility layout shall provide the footprint and hydraulic grade line flexibility to allow the County to install flocculation basins in the future. A dedicated flocculation area upstream of the tertiary filters may be desirable from an O&M perspective if coagulant addition is routinely required. Flocculation if implemented can reduce chemical consumption and decrease the fouling potential of the coagulant on the filter media.

EFFLUENT PUMPING AND HANDLING

5.1 PURPOSE

The purpose of this chapter is to identify the necessary effluent pumping and handling facilities at the San Luis Obispo County's (County) proposed Los Osos Water Recycling Facility (LOWRF) and describe their preliminary design criteria. As such, it establishes a preliminary basis for the design and provides guidance and direction to the subsequent phases of this project.

5.2 PROCESS OVERVIEW

The effluent pumping and handling facilities will consist of a common effluent pump station and one or two on-site storage ponds. This pump station is intended to meet all effluent pumping needs of the LOWRF, including providing on-site irrigation and utility water. The on-site recycled water pond(s) provide the operational flexibility needed to satisfy both the seasonal demands for the recycled water and the effluent disposal requirements associated with leach-field discharges.

Figure 5.1 is the process flow diagram for the effluent pumping and handling facilities. In normal operation, the disinfected filter effluent (from the ultraviolet (UV) process) flows to the on-site storage pond(s) by gravity. The effluent pumps withdraw water from the pond(s) and pressurize a pipeline that supports both on- and off-site applications. Alternatively, if the storage pond(s) are unavailable, the flow from UV can bypass the pond(s) and be routed directly to the suction header for the Effluent Pump Station. Within the LOWRF, the pumped effluent is used as utility water and for irrigation. The effluent pipeline also serves the recycled water distribution system as well as the effluent disposal systems (leach fields). During the irrigation season, reuse customers are the primary recipients of the water, whereas the leach fields are the main discharge locations in the winter or non-irrigation season.

It should be noted that the entire effluent distribution system is currently under construction in a separate project. That project, referred to as the Los Osos Wastewater Collection System Project, provides a tie-in point for the LOWRF's effluent pipeline at the intersection of Los Osos Valley Road and Clark Valley Road.

5.3 SYSTEM DESCRIPTION

This section provides a brief description of both the on-site facilities and the off-site effluent distribution system. It also describes how the effluent use and disposal are expected to be balanced and managed. As such, it provides a design basis used during the preliminary design development for sizing the effluent pumps.

5.3.1 Distribution/Disposal System

There are eight recycled water users within the town of Los Osos. A schematic of the distribution system is shown on Figure 5.2. One of the main objectives of the Los Osos Wastewater Program is to mitigate seawater intrusion. Since the greatest mitigation benefit is realized by providing recycled water to urban reuse customers and reducing their potable water consumption, flow to these sites during the irrigation season must be maximized. A secondary benefit is gained from discharge to the leach fields, which are primarily used in winter. After recycled water is distributed to urban reuse sites and leach fields, the remaining water is supplied to agricultural irrigation customers. The preliminary pressure requirements for the distribution system consist of minimum 60 psi and a target pressure of 70 psi for all irrigation customers - both urban and agricultural. .

Table 5.1 summarizes the estimated annual flows to the various reuse/disposal sites. Annual flow to each irrigation customer currently identified has been estimated based on the irrigation area, turf irrigation requirements, and typical rainfall. Annual flow to each leach field has been estimated based on a conservative infiltration capacity. The annual flow to agricultural irrigation is the remaining volume of the treated effluent after accounting for all other reuse/disposal volumes. Flow to agricultural irrigation will increase as the influent flow to the plant increases.

Table 5.1 Annual Flow to Reuse/Disposal Sites San Luis Obispo County

Location	Type	Estimated Annual Flow at Startup(1) (AF)	Estimated Annual Flow at Build-out(2) (AF)
Broderson	Leach field	448	448
Bayridge	Leach field	33	33
Los Osos Middle School	Urban Reuse	25	25
Baywood Elementary	Urban Reuse	7	7
Sunnyside Elementary	Urban Reuse	5	5
Monarch Elementary	Urban Reuse	5	5
South Bay Community Center	Urban Reuse	5	5
Sea Pines Golf Course	Urban Reuse	17	17
LOWRF On-site Irrigation	Urban Reuse	3	3
Cemetery	Urban Reuse	20	20
Agriculture	Agricultural Reuse	222(3)	552(3)
	Total	**790**	**1,120**

Notes:
(1) Based on the annual average flow (AAF) of 0.72 mgd.
(2) Based on the AAF of 1.02 mgd.
(3) Does not account for evaporation. If accounted for, volume to agriculture reuse will be approximately 5 to 10 percent lower.

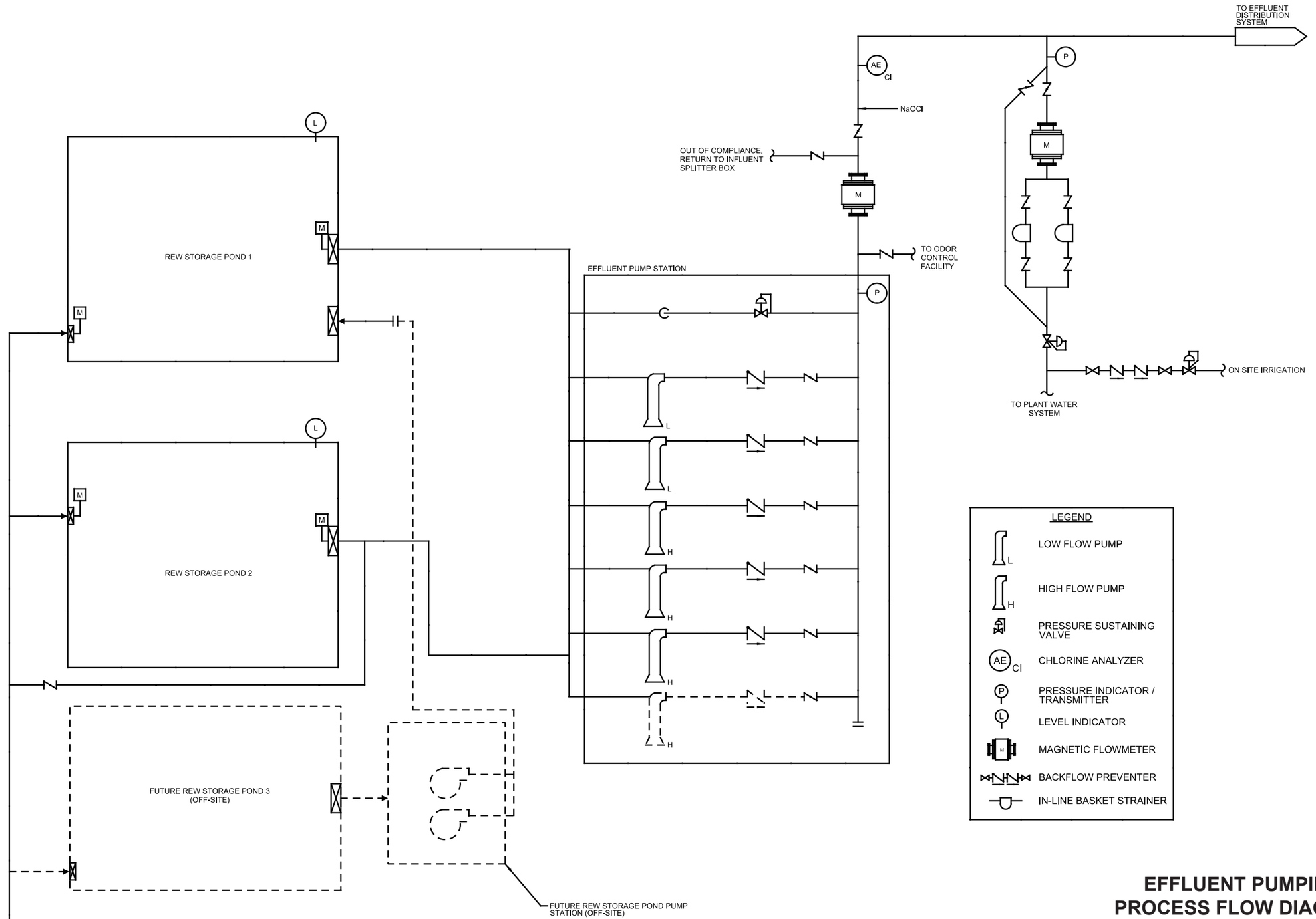

EFFLUENT PUMPING PROCESS FLOW DIAGRAM

FIGURE 5.1

86-SanLuisObispo9-12F5.1-8930A10.ai

carollo
Engineers...Working Wonders With Water™

COUNTY OF SAN LUIS OBISPO

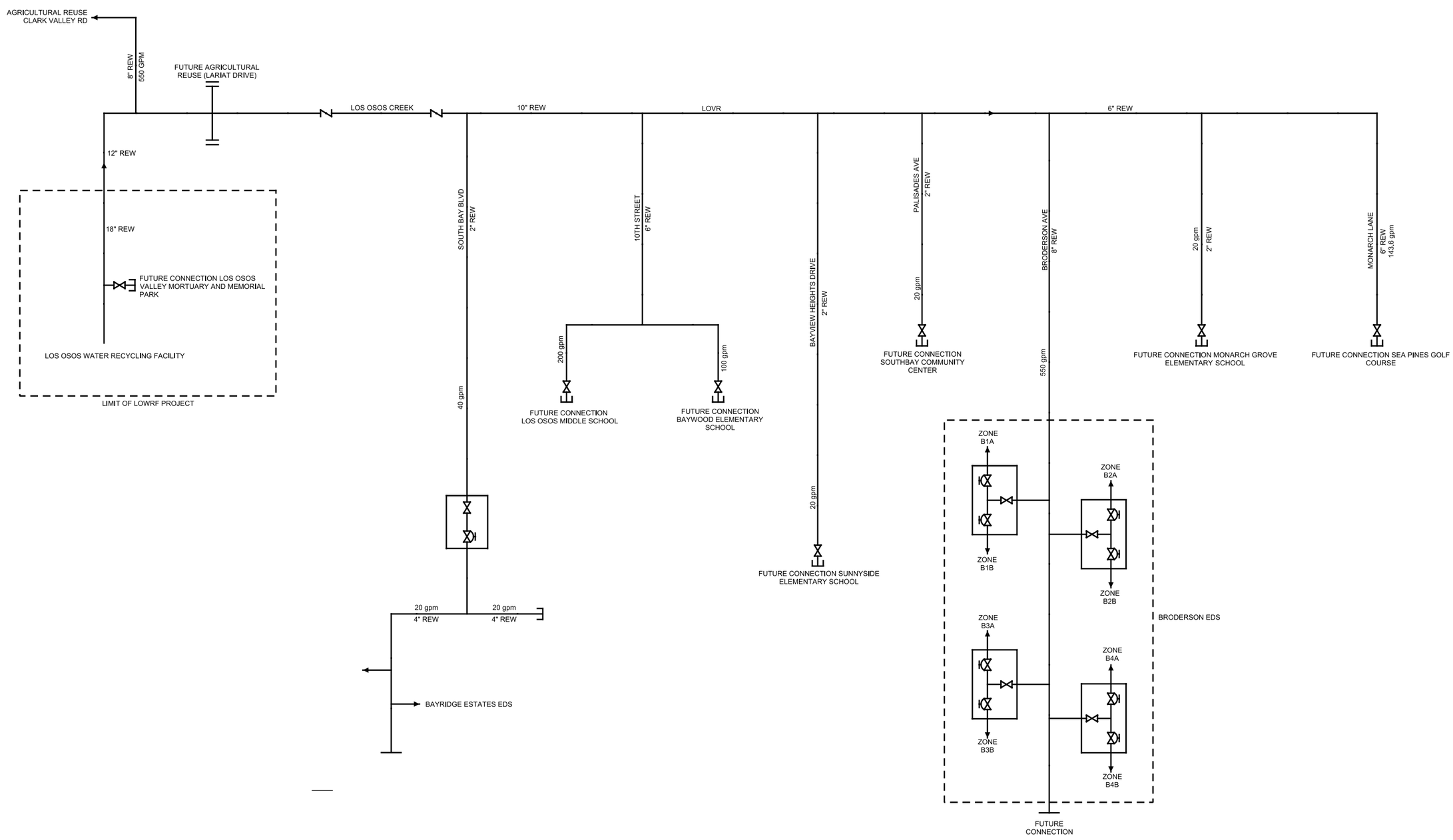

DISTRIBUTION SYSTEM SCHEMATIC

FIGURE 5.2

86-SanLuisObispo9-12F5.2-8930A10.ai

carollo
Engineers...Working Wonders With Water™

5.3.2 Storage Pond(s)

One or two storage ponds will be located at the treatment plant to store recycled water. The pond(s) provide storage of winter flow in excess of the capacity of the leach fields (0.86 mgd). Stored recycled water is distributed to reuse customers during the irrigation season. Even at startup when the design maximum month flow is 0.93 mgd, a portion of the winter flow would be stored in the ponds.

The pond(s) are intended to be seasonally emptied. As indicated in Table 5.1, additional agricultural reuse customers must be brought online to accommodate increases in plant influent flow rate.

Figure 5.2 is the preliminary site layout that shows the locations and configuration of the two storage ponds for a combined capacity of 54 acre-feet (AF). The final volume of the on-site storage facilities will be determined during final design, but is expected to be in the range of 30 to 50 AF. It is anticipated at this time that in the future the storage requirements will increase to 150 AF. The additional storage facility needed to meet the future capacity would be located off-site and constructed under a separate project. Recycled water stored off-site may need to be transferred back to the on-site storage pond(s) for distribution.

5.3.3 Effluent Pump Station

The results of the preliminary design efforts for the Effluent Pump Station indicate that in order to meet the full range of flow rates anticipated for the overall effluent system at build-out, the pump station would ultimately require two low-flow pumps and four high-flow pumps. One of the high-flow pumps would serve as a standby unit. The LOWRF design/build (D/B) project shall provide two low-flow pumps and three high-flow pumps, while the pump station design shall include provisions for adding a high-flow pump in the future.

5.3.3.1 Anticipated Flow and Pressure

This section describes the preliminary operational requirements for the Effluent Pump Station.

The pump station shall be provided with a reliable capacity to distribute a design maximum month influent flow of 1.13 mgd (which is equivalent to 0.83 mgd in average dry weather flow) plus on-site utility water flow. This capacity will accommodate a considerable increase in plant influent flow rates from startup.

In addition, the pump station shall accommodate two seasonal conditions:

- Winter Months: maximum flow to the leach fields (0.86 mgd) plus on-site utility water use.

- Irrigation Months: maximum flow to agricultural reuse for up to 215 acres of agricultural land (430 AFY) and 17 percent of the annual irrigation occurring during 1 month (30 days) for a twelve-hour period each day, plus on-site utility water use.

At build-out, the agricultural reuse demand is estimated to increase to 524 AFY, which will serve 260 acres.

Furthermore, broad operational flexibility is needed during irrigation months to accommodate the fluctuating demand that results from supporting many users. Figure 5.2 presents the estimated flow rates and their basis for the reuse/disposal sites.

The pumps should also be designed to meet the minimum pressure requirements to the reuse sites (at their connection points). The preliminary pressure requirements for the pumps were determined based on this system pressure at point of use, maximum flow conditions, and the recycled water distribution piping system presented in the Los Osos Wastewater Collection System Design Drawings issued in April 2012. A pressure-regulating valve is assumed to be on the user "side" where appropriate to eliminate undesirable pressure.

It should be emphasized that the flow rates shown in Table 5.2 reflect the anticipated operation and are subject to change. During the D/B phase, the flow and pressure ranges required to support the recycled water users and disposal sites shall be re-evaluated and confirmed by the D/B team.

Table 5.2 Baseline Distribution Schedule San Luis Obispo County

Time of Day	Site	Flow per Site (gpm)	Total Flow (gpm)	Minimum Flow[3] (gpm)
Irrigation Season				
10 p.m. – 6 a.m. Group A[1]	Los Osos Middle School	200	320	40
	Sunnyside Elementary	20		
	South Bay Community Center	20		
	Monarch Grove Elementary	20		
	Plant Utility	40		
	Plant Irrigation	20		
10 p.m. – 6 a.m. Group B[1]	Baywood Elementary	100	350	40
	Sea Pines	150		
	Sunnyside Elementary	20		
	South Bay Community Center	20		
	Monarch Grove Elementary	20		
	Plant Utility	40		

Table 5.2 Baseline Distribution Schedule San Luis Obispo County				
Time of Day	**Site**	**Flow per Site (gpm)**	**Total Flow (gpm)**	**Minimum Flow[3] (gpm)**
6 a.m. – 6 p.m.	Agriculture Startup[4]	1,100	1,300	140
	Plant Utility	200		
	Agriculture Build-out[5]	2,000	2,200	140
	Plant Utility	200		
6 p.m. – 10 p.m.	Sea Pines	150	330	40
	Broderson	140		
	Plant Utility	40		
Winter Season				
24 hr/day	Broderson	550	750	550
	Plant Utility	200		
	Bayridge[2]	40		

Notes
(1) Assumes Los Osos Middle School and Baywood Elementary will not be irrigated at the same time.
(2) Assumes Bayridge leach field would be served when plant utility water demands are low.
(3) Assumes minimum flow is for utility water use. During the night, flow includes spray bars only. During the day, flow includes spray bars and solids handling.
(4) Startup flow to agricultural reuse is based on irrigation of 215 acres (430 AFY) and 17 percent of the annual irrigation occurs during 1 month (30 days) for a 12-hour period each day.
(5) Build-out flow to agricultural reuse is based on irrigation of 260 acres (524 AFY) and 17 percent of the annual irrigation occurs during 1 month (30 days) for a 12-hour period each day.

5.3.3.2 Minimum Flow

The design minimum flow assumes that there may be instances during the irrigation season where the only demand is on-site utility water use. To accommodate the very low flow condition, a recycled water recirculation loop with a pressure-sustaining valve or an equivalent mechanism shall be provided.

5.3.3.3 Out-of-Compliance Management

In the event effluent sampled after the disinfection process does not meet recycled water criteria, the effluent will be routed to either an REW storage pond or the stormwater retention pond and isolated. Once the effluent returns to in-compliance condition, off-site conveyance may be temporarily suspended to route the stored non-compliant effluent to the head of the treatment plant for retreatment.

5.3.3.4 Chlorine Addition and Measurement

Sodium hypochlorite (SHS) shall be added to the recycled water flow downstream of the effluent flow meter to provide chlorine residual in the distribution system. A chlorine analyzer shall be provided to monitor the concentration.

5.3.4 Utility Water System

As mentioned previously, the Effluent Pump Station shall support the utility water system. The preliminary design drawings show a utility water branch from the effluent pump discharge header near the return activated sludge (RAS)/waste activated sludge (WAS) Pump Station. Recycled water piping for utility water use shall be equipped with a pressure-reducing valve, a flowmeter, and two in-line basket strainers.

5.4 DESIGN CRITERIA

Through the efforts completed to date as part of the preliminary design development and the preceding engineering tasks, a number of specific parameters and processes have been evaluated, vetted, and validated. The criteria listed in the subsequent tables are identified as “fixed” criteria or a “baseline” design assumption. **The fixed criteria represent specific parameters that are not anticipated to be revised as design progresses, based on the evaluation and vetting efforts completed to date, without additional justification, or as a result of currently unforeseen changes.** As such, the D/B team is expected to assume these criteria to be fixed through the remainder of the design phase efforts. However, it should be noted that some of the fixed criteria may be revisited if financial reasons dictate changes to the overall design (i.e., should the subsequent cost estimates exceed the project budget).

Other criteria are identified as “baseline” design assumptions, which represent the preliminary parameters used by Carollo Engineers, Inc. (Carollo) as part of the initial design definition efforts but that are not specifically fixed at this point in the design process. These “baseline” criteria are expected to be further evaluated and adjusted by the D/B team and the County as design progresses. It is anticipated that innovation, value engineering and general preferences by the D/B team may result in proposed variations to some of the baseline design assumptions presented herein.

5.4.1 Specific Design Criteria

Table 5.3 summarizes the design criteria of the effluent pumping and handling facilities that have been conceptualized to date.

Table 5.3 Design Criteria Summary – Effluent Storage and Pumping San Luis Obispo County

Design Parameter	Units	Criterion/ Value	Criteria Intention: "Fixed" Criteria for D/B Team	Criteria Intention: "Baseline" Design Assumption
Effluent Pump Station				
Type of Pumps		Vertical Turbine		X
Low-Flow Pumps				
Capacity	gpm	350		X
Number of Units				
Duty	1			X
Standby	1			X
Total	2			X
TDH	ft	260		X
Static Head	ft	230		X
Speed Control		VFD	X	
Horsepower, each	hp	40		X
High-Flow Pumps				
Capacity	gpm	750		X
Number of Units				
Duty (initial)	2			X
Duty (future)	3(1)			X
Standby	1		X	
Total (initial)	3			X
Total (future)	4			X
TDH		250		X
Static Head		210		X
Speed Control		VFD	X	
Horsepower, each	hp	70		X
Flowmeter	--	Required	X	
Utility Water				
Maximum Flow(2)	gpm	700		X
Minimum Flow(2)	gpm	10		X

Table 5.3 Design Criteria Summary – Effluent Storage and Pumping San Luis Obispo County				
			Criteria Intention	
Design Parameter	Units	Criterion/ Value	"Fixed" Criteria for D/B Team	"Baseline" Design Assumption
System Pressure	psi	110		X
Flowmeter	--	Required	X	
REW Storage Ponds				
Storage Volume at Startup (0.0.72 mgd AAF)	AF	30-50(3)	X	
Storage Required at Build-out (1.02 AAF)	AF	150(4)		X
On-site Storage	AF	30-50(3)	X	
Off-site Storage Volume Required to meet Build-out	AF	106(4)		X
Number of On-site Ponds (min)	--	1 or 2(5)	X	
Minimum Freeboard	ft	4	X	
Maximum Side Slope	--	2:1	X	
Pond Floor Material	--	Concrete	X	
Pond Side Lining Material	--	TBD by D/B Team		X

Notes:
(1) The number of duty pumps at future includes the initial duty pump
(2) Refer to the Technical Memoranda, Appendix E for the anticipated utility flow requirements.
(3) The final volume of the on-site storage pond(s) is to be determined.
(4) Anticipated capacity, not included in this project.
(5) If two on-site ponds are provided, the difference in storage volume between the ponds shall not exceed 15 percent.

5.4.2 Design Considerations

This section summarizes the important non-qualitative criteria for the storage ponds and effluent pump station that should be considered by the designer during the D/B phase of the project. The design shall:

- Comply with the appropriate standards of the Hydraulic Institute relative to the pump station design.
- Provide an effluent pumping system that meets the design pumping conditions and allows for expansion to meet build-out conditions without modifications to the overall footprint or to the suction and discharge headers.

- Provide an effluent pumping system that distributes recycled water to urban and agricultural reuse customers per the requirements defined in user agreements established by the County and guidelines provided by the County.
- Provide an effluent pumping system that delivers the total annual discharge volume to each leach field primarily during the winter months.
- Provide utility water plant-wide to sufficiently support various utility water needs of the LOWRF.
- Provide water for on-site irrigation consistent with the flow and pressure requirements for the intended use.
- Provide permanent piping and valving to allow for diversion of pump discharge to the head of the treatment plant for retreatment of non-compliant effluent stored in the ponds. Diversion should strategically protect the recycled water distribution system from contamination to the greatest extent practical.
- Perform a pressure surge analysis for the effluent pumping and distribution system and provide the appropriate surge protection system.
- Allow adequate space for crane access to the pump station for pump installation and replacement
- Incorporate the as-built recycled water distribution system. At the time of the LOWRF preliminary design, the construction documents allow the use of either polyvinyl chloride (PVC) or high-density polyethylene (HDPE) pipe for the recycled water distribution system.
- Provide distribution system chlorine residual per Title 22 requirements. Hypochlorite dosing rates shall consider point of use for all irrigation customers and not create a chlorine concentration that damages landscaping for any user.
- Limit pond dimensions so that the ponds are within the non-jurisdictional size criteria of the California Division of Safety of Dams.
- Install safety barriers along the perimeter of the recycled water ponds.
- Provide vehicular access to the bottom of each storage pond, designed for H-20 loading.
- Include provisions to distribute stored recycled water to an off-site location (by either gravity or pumping) and to return off-site stored recycled water to the on-site storage ponds.

5.5 LAYOUT

Figure 5.3 and Figure 5.4 show a conceptual plan and its corresponding section for the effluent pump station.

5.6 CONTROL NARRATIVES

This section provides a preliminary control narrative for the storage ponds and effluent pump station. The control narrative describes how the system is intended to be controlled during normal operating conditions. In general, equipment and processes would be in the remote automatic mode, and the Plant PLC would control them via SCADA.

5.6.1 Recycled Water Storage Pond(s)

Each recycled water storage pond will be equipped with a level monitoring device. The water level in each pond and the corresponding volume will be provided at the SCADA.

Flow to the pond(s) will be controlled by operating manual gates in the field.

5.6.2 Effluent Pump Station

The Effluent Pump Station in the current phase consists of two low-flow pumps and three high-flow pumps. The pumps are configured as lead/lag/lag-lag/lag-lag-lag/standby. The duty designations are operator adjustable at the SCADA.

In general, the low-flow pumps are designed to support the urban reuse customers. The high-flow pumps primarily serve the needs of the leach fields and the agricultural customers. As a result, the duty designations are made based on the recycle water usage out in the distribution system. During the irrigation season, the lead and lag pumps are selected based on the time of day. During the night hours, the two low-flow pumps function as lead and lag. During the day and evening hours, the two high-flow pumps serve as lead and lag.

Similarly, during winter operation, the two high-flow pumps function as lead and lag.

During the shoulder seasons, the operator has the flexibility to choose any duty designation combination as appropriate.

The pumps can operate under one of four modes: Pressure, Pond Level, Discharge Volume, and Out of Compliance Return. Under pressure control mode, the pumps synchronize and vary their speed together to maintain a pressure setpoint in the discharge header. Under Pond Level control mode, the pumps function similarly to maintain a setpoint level in the ponds. Under Discharge Volume mode, a preset adjustable number of pumps operate at a preset adjustable speed until an operator-selected volume has been delivered as measured by the effluent flowmeter.

The fourth mode, Out of Compliance Flow Return, controls the pumps to maintain an operator adjustable flow setpoint for the combined flow to the Influent Splitter, which consists of the plant influent and the out-of-compliance return. Automatic valves on the discharge header will open and close to control the return flow to the process.

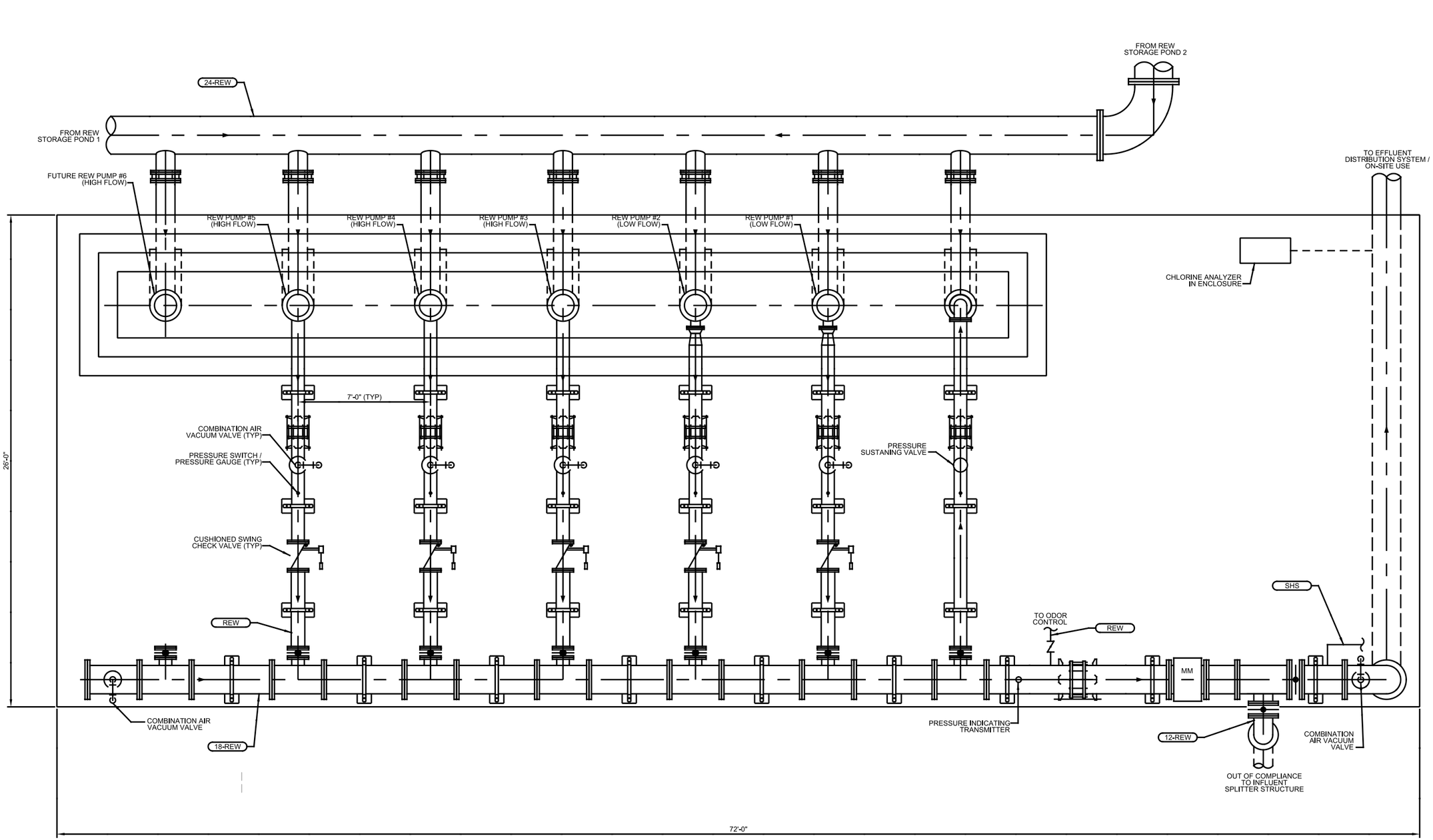

EFFLUENT PUMP STATION - PLAN

FIGURE 5.3

86-SanLuisObispo9-12F5.3-8930A10.ai

carollo
Engineers...Working Wonders With Water™

COUNTY OF SAN LUIS OBISPO

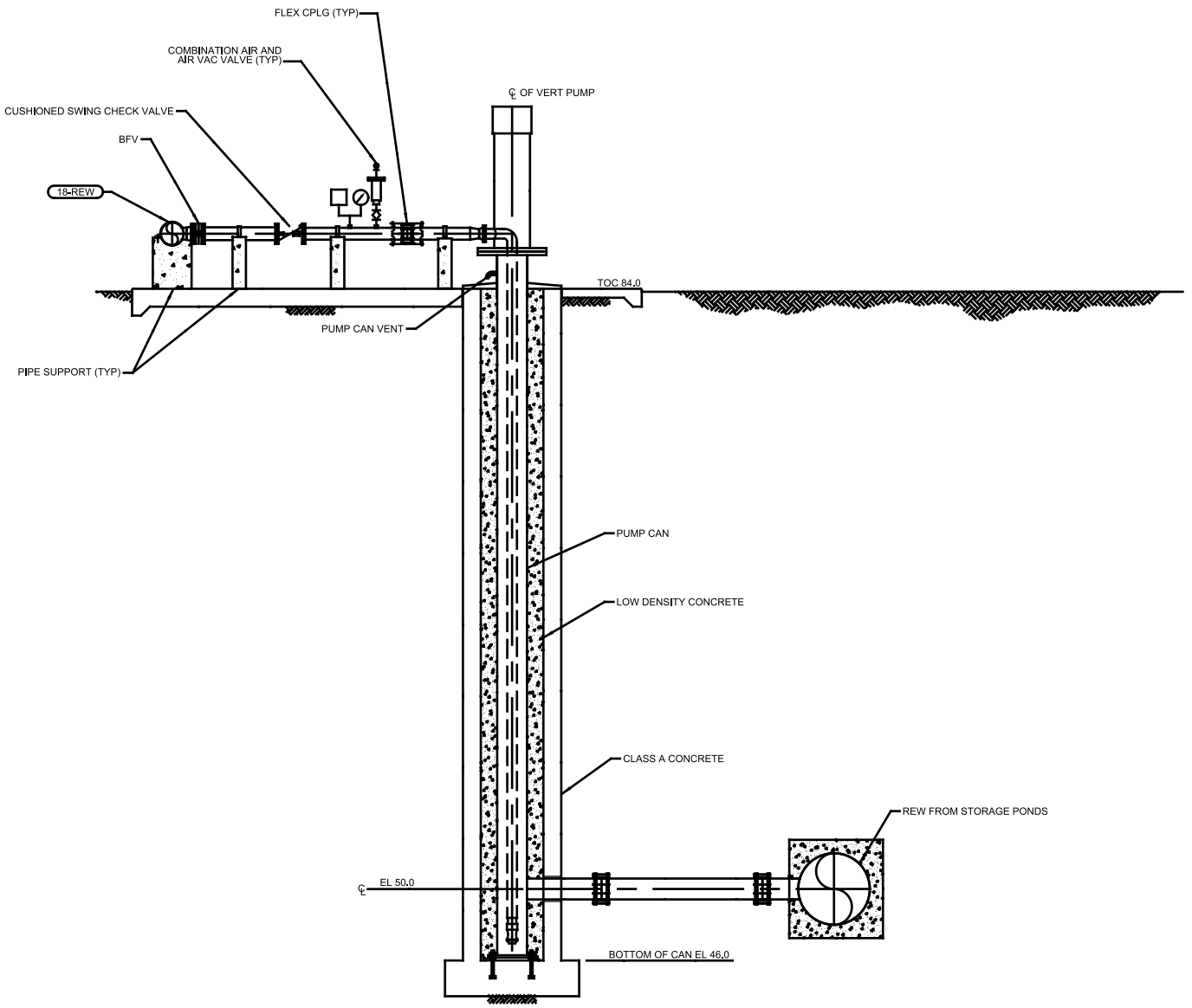

EFFLUENT PUMP STATION - SECTION

FIGURE 5.4

86-SanLuisObispo9-12F5.4-8930A10.ai

5.7 FUTURE CONSIDERATIONS

5.7.1 Future Effluent Pumps

The pump station must accommodate future capacity expansion to support increasing agricultural use. As shown in Table 5.3, the estimated build out agricultural demand is 2,000 gpm. The pump station shall be designed to include space and piping connections for additional pumps to be installed in the future without any excavation or expansion of the pump station footprint.

5.7.2 Off-Site Storage

Approximately 100 acre-feet of off-site storage are anticipated for the future. At this time, it is not known whether routing of excess winter flow to the future off-site storage facility can occur by gravity or requires pumping. The on-site storage pond(s) shall include an additional inlet structure and a piping stub-out for future piping extension that would connect the discharge from an off-site pump station to the pond(s). The suction and discharge headers for the effluent pumps shall each include a tee for a future connection to route the flow to the off-site storage.

SOLIDS HANDLING

6.1 PURPOSE

The purpose of this chapter is to identify the necessary solids handling facilities at the San Luis Obispo County's (County) proposed Los Osos Water Recycling Facility (LOWRF) and describe their preliminary design criteria. The solids handling facilities addressed in this chapter include:

- Sludge Storage
- Dewatering Feed Pumping
- Sludge Dewatering
- Dewatered Cake Conveyance and Hauling

6.2 PROCESS OVERVIEW

In general, the biosolids handling system processes sludge generated from various treatment processes to achieve two main objectives: to make off-site hauling more cost effective and to facilitate safe disposal or reuse. At the LOWRF, the waste activated sludge (WAS) from the secondary process will be decanted and dewatered for hauling and disposal. Dewatering reduces the moisture content of the biosolids, thereby reducing the volume and the cost of biosolids being handled. Dewatering also produces biosolids that are suitable for land application and final disposal. Sludge storage de-couples the sludge wasting operations from dewatering, improving control of the dewatering facilities and substantially increasing operational flexibility.

The solids handling facilities at the LOWRF shall be designed to produce Sub-Class B solids and consist of two secondary sludge storage tanks and a solids handling building. The storage tanks will be equipped with aeration blowers to avoid septic conditions with the oxygen addition and to provide intermittent mixing of the content. The use of a telescoping valve or an equivalent method shall be provided, so the solids can be decanted and thickened in the storage tanks. The decant flow will drain to the plant drain system. The solids handling building, which is named the Dewatering Building, will house equipment associated with the dewatering and dewatered cake conveyance processes to provide longevity and facilitate odor control. Such equipment includes dewatering feed pumps; a polymer feed system, mechanical sludge dewatering units, and dewatered cake conveyance equipment. Dewatered cake will be loaded directly into a truck for hauling and disposal. Figure 6.1 is an overall site layout that shows potential locations of the solid handling facilities. Figures 6.2 and 6.3 are process flow diagrams for the solids handling facilities.

6.3 DEWATERING ALTERNATIVES

There are various biosolids dewatering technologies available in the market. Among them, belt filter presses (BFP) and screw presses are deemed most appropriate for this project, and shall be considered and further evaluated by the design/build (D/B) team. A comparison of the two technologies shows that they are comparable in many aspects with each technology having some advantages over the other. A brief description of each technology is provided below. The preliminary design for this project is based on the screw press technology.

6.3.1 Screw Presses

Screw presses dewater sludge in two ways. First, gravity drainage occurs at the inlet section of the screw. Also, additional free water is squeezed out of the sludge as it is conveyed to the discharge end of the screw under increasing pressure. A screw conveyor moves sludge in a reduced diameter screen bowl. The continued reduction in diameter increases the pressure along the length, which results in the dewatering of the biosolids and allowing of liquids to escape through perforated screens surrounding the screw.

Screw presses have been in use for biosolids dewatering for a relatively short period of time compared to the BFPs. In general, they have lower capacities than belt presses, but require less maintenance, operator attention, and washwater compared to BFPs. They are fully enclosed units, which makes it easier to connect and treat odors associated with the process. For WAS dewatering, a screw press typically produces at least 15 percent solids content sludge cake. The filtrate can be recycled back to the treatment process.

6.3.2 Belt Filter Presses

The BFP is a commonly used technology for biosolids dewatering. It is continuously operated and uses the principles of chemical conditioning, gravity drainage, and mechanically applied pressure to dewater sludge. The biosolids are initially spread out across a continuously moving belt to allow free water to drain naturally by gravity. They are then compressed between two filter belts, which are run through a series of rollers to squeeze out additional water. A polymer solution is typically mixed with the biosolids upstream of the BFP to enhance the dewatering process.

BFPs have been in the market for many years, and most plants have some degree of familiarity with their operation. They require significant operator attention and are not enclosed, thus requiring odor control for the entire building in which they are located. For WAS dewatering, the BFP typically produces at least 15 percent solids content sludge cake. The filtrate can be recycled back to the treatment process.

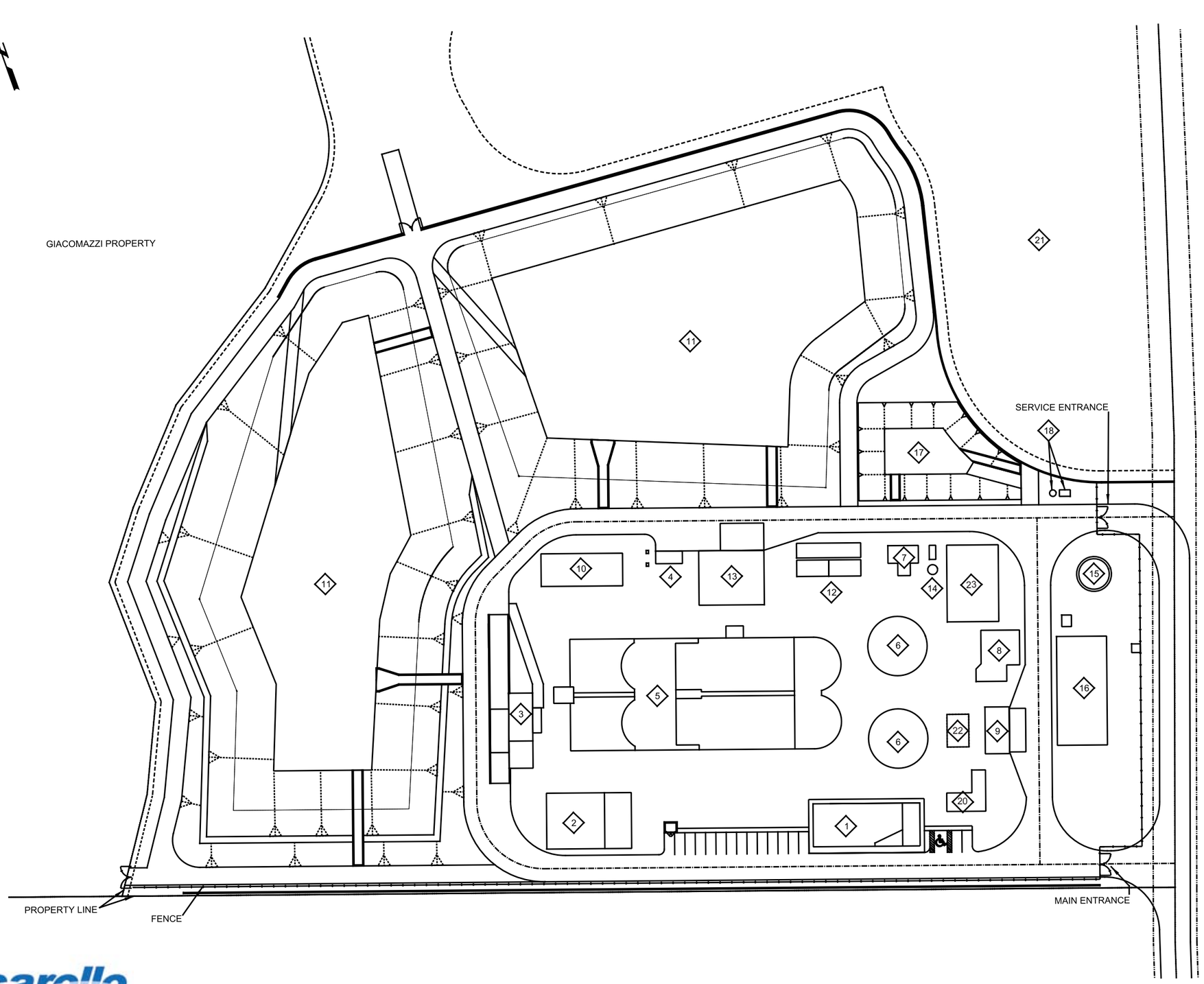

FACILITIES:

1. ADMINISTRATION BUILDING
2. MAINTENANCE BUILDING
3. INFLUENT METER VAULT/HEADWORKS/SEPTAGE RECEIVING
4. ODOR CONTROL FACILITY
5. OXIDATION DITCH
6. SECONDARY CLARIFIERS
7. RAS/WAS PUMP STATION
8. TERTIARY FACILITY
9. CHEMCIAL FACILITY
10. EFFLUENT PUMP STATION
11. REW STORAGE PONDS
12. SOLIDS STORAGE TANKS
13. DEWATERING BUILDING
14. PLANT DRAIN PUMP STATION
15. WATER STORAGE TANK
16. ELECTRICAL BUILDING
17. STORM WATER RETENTION POND
18. STORM WATER PUMP STATION
19. GROUNDWATER WELL
20. FILTER INFLUENT PUMP STATION
21. DESIGNATED ENVIRONMENTALLY SENSITIVE HABITAT AREA.
22. FUTURE FLOCCULATION BASIN
23. UV FACILITY

SITE PLAN

FIGURE 6.1

carollo
Engineers...Working Wonders With Water™

86-SanLuisObispo9-12F6.1-8930A10.ai

COUNTY OF SAN LUIS OBISPO

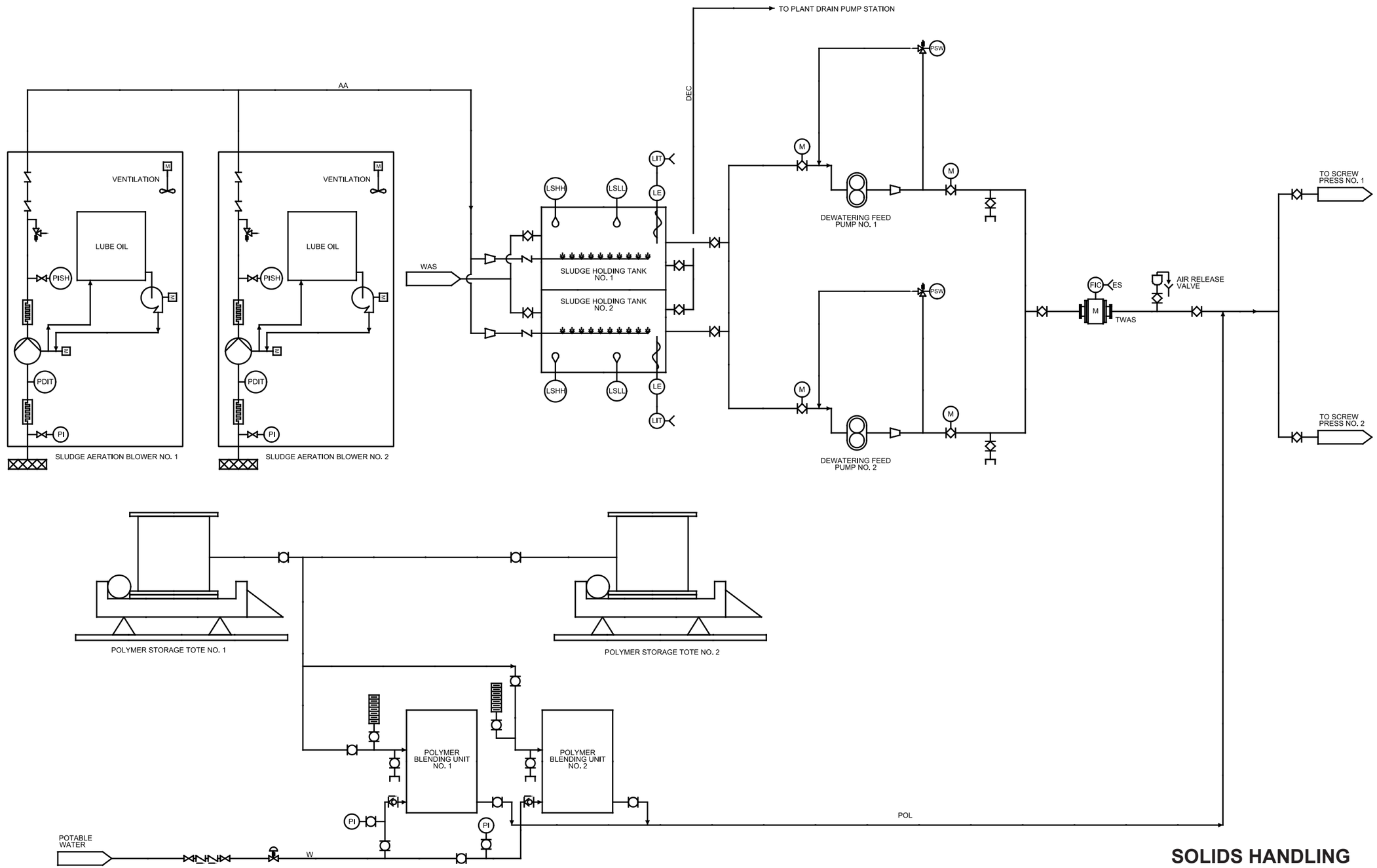

SOLIDS HANDLING PROCESS FLOW DIAGRAM I

FIGURE 6.2

86-SanLuisObispo9-12F6.2-8930A10.ai

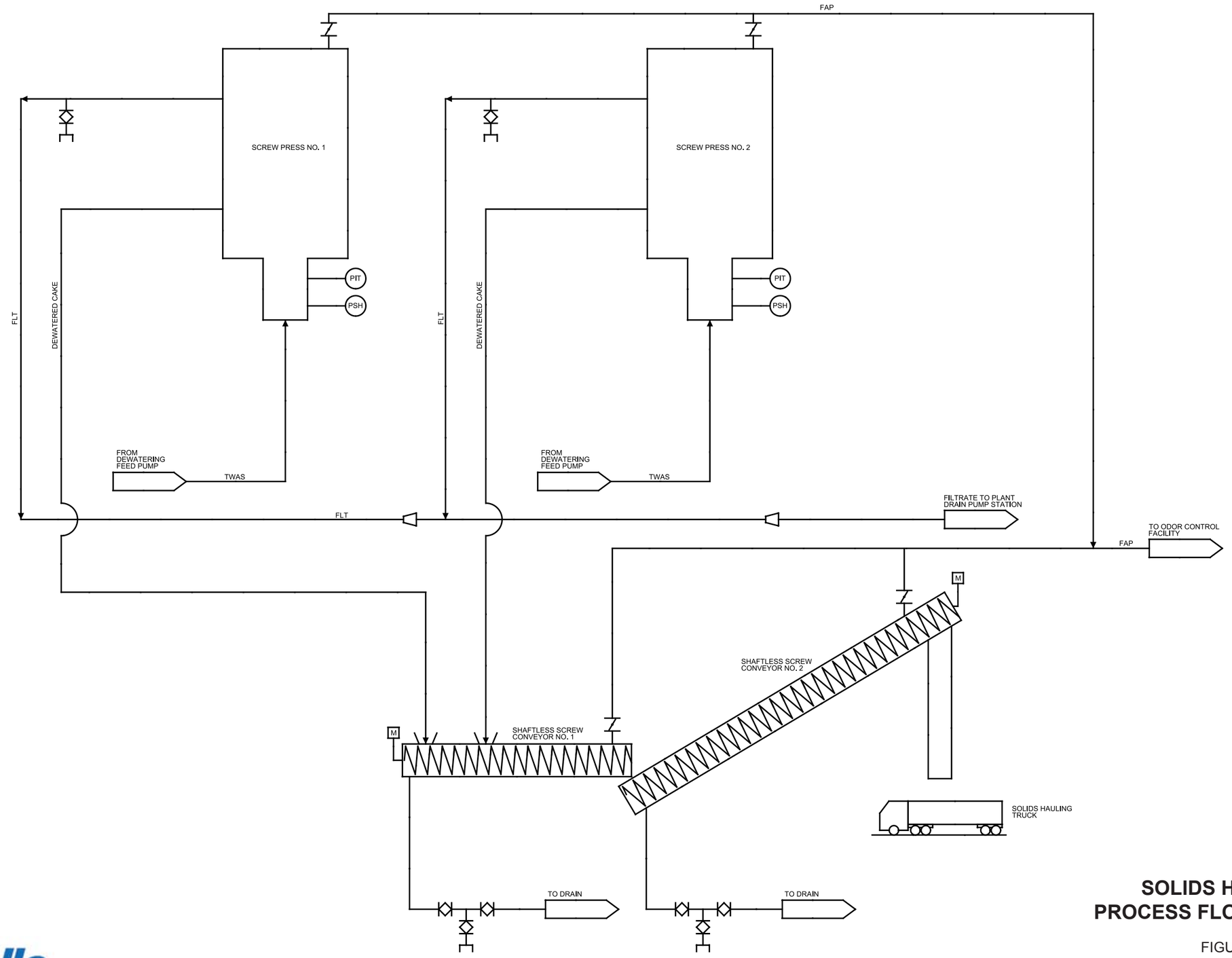

SOLIDS HANDLING PROCESS FLOW DIAGRAM II

FIGURE 6.3

86-SanLuisObispo9-12F6.3-8930A10.ai

carollo
Engineers...Working Wonders With Water™

COUNTY OF SAN LUIS OBISPO

6.4 DESIGN CRITERIA

Through the efforts completed to date as part of the preliminary design development and the preceding engineering tasks, a number of specific parameters and processes have been evaluated, vetted, and validated. The criteria listed in the subsequent tables are identified as “fixed” criteria or a “baseline” design assumption. **The fixed criteria represent specific parameters that are not anticipated to be revised as design progresses, based on the evaluation and vetting efforts completed to date, without additional justification, or as a result of currently unforeseen changes.** As such, the D/B team is expected to assume these criteria to be fixed through the remainder of the design phase efforts. However, it should be noted that some of the fixed criteria may be revisited if financial reasons dictate changes to the overall design (i.e., should the subsequent cost estimates exceed the project budget).

Other criteria are identified as “baseline” design assumptions, which represent the preliminary parameters used by Carollo Engineers, Inc. (Carollo) as part of the initial design definition efforts but that are not specifically fixed at this point in the design process. These “baseline” criteria are expected to be further evaluated and adjusted by the D/B team and the County as design progresses. It is anticipated that innovation, value engineering and general preferences by the D/B team may result in proposed variations to some of the baseline design assumptions presented herein.

6.4.1 Specific Design Criteria

The preliminary design criteria for the processes and equipment associated with the solids handling facilities are briefly described below and summarized in Table 6.1.

6.4.1.1 Sludge Storage

WAS shall be stored in two storage tanks prior to being pumped to the dewatering units. The sludge storage tanks shall be sized to hold the sludge pumped from the secondary treatment for two days. In actual operation, the storage tanks will allow in-tank thickening and decanting to increase the sludge concentration from 1 percent to 2 percent solids. At 2 percent concentration, the tanks shall provide storage of up to 4 days, which allows for batch operation of dewatering equipment.

6.4.1.2 Sludge Aeration

The content of the sludge storage tanks will be aerated to provide oxygen and mixing. This practice will aid in preventing septic conditions. Two positive displacement aeration blowers each with sufficient capacity to serve both tanks shall be installed.

6.4.1.3 Sludge Decanting

The anticipated solids concentration in the influent WAS (i.e., without thickening) will be approximately 1 percent. To reduce the capacity of the required dewatering system and to increase the solids concentration of dewatered cake, the sludge storage tanks shall have provisions for in-tank thickening and decanting. As currently envisioned, decanting would take place automatically (over a short period of time daily) and alternate between the two tanks. Prior to decanting, the aeration blowers, WAS pumps, and dewatering feed pumps would be either isolated from the tank to be decanted or turned off to allow the material to settle and thicken. Telescoping valves or an equivalent mechanism shall be used to drain the decant from the storage tank into the plant drain pump station. The target concentration after decanting shall be at least 2 percent.

6.4.1.4 Dewatering Feed Pumping

Two dewatering feed pumps are required to pump sludge from the storage tanks to dewatering. Piping shall be set up with flexibility that each pump can serve any dewatering unit.

6.4.1.5 Sludge Dewatering

The design of the dewatering equipment shall be based on an operating schedule of up to 30 hours a week. Depending on the selected technology, this schedule can be met by operating the system in one continuous batch mode each week or limiting the operation to specific hours of the day and operating the system over several days each week.

6.4.1.6 Dewatered Cake Conveyance

The dewatered cake may be loaded directly into a hauling tank using shaftless screw conveyors. As currently envisioned, a horizontal collection conveyor will be used to receive cake discharged from the dewatering units, and an inclined conveyor will then continue the conveyance to a hauling truck.

Table 6.1 Design Criteria Summary – Solids Handling San Luis Obispo County

Design Parameter	Units	Criterion/Value	Criteria Intention: "Fixed" Criteria for D/B Team	Criteria Intention: "Baseline" Design Assumption
Sludge Production				
Max Month Plant Influent Flow at Build-out	mgd	1.23	X	
Max Month WAS Flow	lb dry solids/day	3,954[(1)]		X
Influent WAS Concentration, max	percent	1.0[(2)]	X	

Table 6.1 Design Criteria Summary – Solids Handling San Luis Obispo County

Design Parameter	Units	Criterion/Value	Criteria Intention: "Fixed" Criteria for D/B Team	Criteria Intention: "Baseline" Design Assumption
Influent WAS Flow	gpd	47,500[1]		X
WAS Wasting Period	days/week	5	X	
Sludge Storage Tanks				
Number of Units	-	2	X	
Length, each	feet	28		X
Width, each	feet	15		X
Side Water Depth, each	feet	15		X
Mixing Type	-	Aerated Mixing	X	
Diffuser Type	-	Coarse Bubble Diffusers	X	
Detention Time at Influent WAS Concentration	hours	48	X	
Storage Tank Aeration Blowers				
Type of Blower	-	Rotary Lobe		X
Number of Units				
Duty	-	1	X	
Standby	-	1	X	
Total	-	2	X	
Minimum Oxygen Transferred[3]	lb/day/tank	380	X	
Capacity, each	scfm	700		X
Approximate Horsepower, each	hp	35		X
Sludge Decanting				
Decanting Mechanism	-	Telescoping Valves		X
Minimum Decanted Solids Concentration	percent	2	X	
Dewatering Feed Pumps				
Type of Pump	-	Positive Displacement	X	
Number of Units				
Duty	-	1	X	

Table 6.1 Design Criteria Summary – Solids Handling San Luis Obispo County

Design Parameter	Units	Criterion/Value	Criteria Intention: "Fixed" Criteria for D/B Team	Criteria Intention: "Baseline" Design Assumption
Standby	-	1	X	
Total	-	2	X	
Capacity, each	gpm	75[4]		X
No of Stages if Progressive Pumps are Provided	-	2	X	
Drive Type	-	VFD	X	
Approximate Horsepower, each	hp	15		X
Sludge Dewatering				
Max Permissible Run Time	hrs/week	30	X	
Type of Unit	-	Screw press or belt filter press	X	
Minimum Number of Dewatering Units				
Duty	-	1	X	
Standby	-	1	X	
Total	-	2		X
Minimum Hydraulic Loading Rate	gpm	75	X	
Minimum Solids Loading Rate	lb/hr	660	X	
Solids Capture, min	percent	90	X	
Max Screw Press Speed[5]	rpm	2.0	X	
Polymer Dose	lb/dry ton	25		X
Dewatered Cake				
Minimum Solids Concentration	percent	15 percent	X	
Cake Production	lb/week	19,800		X
Dewatered Cake conveyance				
Type of Unit	-	Shaftless Screw Conveyor	X	
Number of Units				
Duty	-	2[6]		X
Standby	-	0		X
Total	-	2		X

Table 6.1 Design Criteria Summary – Solids Handling San Luis Obispo County				
			Criteria Intention	
Design Parameter	Units	Criterion/Value	"Fixed" Criteria for D/B Team	"Baseline" Design Assumption
Maximum Inclination Angle	degrees	30	X	
Minimum Conveyor Capacity	ft^3/hr	120	X	
Dewatered Cake Hauling				
Type of System	-	Direct Truck Loading		X

Notes:
(1) Based on the assumption that WAS is wasted for 5 days in a week.
(2) Based on expected WAS concentration under normal operation with both secondary clarifiers in service.
(3) Based on 12 percent VSS destruction.
(4) Hydraulic capacity of pump should match hydraulic capacity of dewatering unit.
(5) If screw press is the selected alternative.
(6) Consist of one horizontal conveyor and one inclined conveyor.

6.5 DESIGN CONSIDERATIONS

This section summarizes the important non-quantitative criteria for the solids handling facilities that should be considered by the designer during the D/B phase of the project.

6.5.1 Layout

Screw presses if used will require open space to allow removal of the screw for maintenance or replacement. A curb should be provided around the dewatering equipment area to properly contain and drain spills and wash down water.

6.5.2 Decanting Operation Strategy

The operation of the sludge storage system should be conducted in a way to allow the material in the storage tanks to settle, thicken and be decanted from approximately 1 percent to 2 percent in solids concentration. As part of final design, an automatic control strategy for decanting shall be developed and implemented. The strategy shall include the controls of the WAS pumps, sludge tank aeration blowers, dewatering feed pumps, and the telescoping valves and shall ascertain that the proper system components and the appropriate level of automation have been provided.

6.5.3 Selection of Dewatering Technology

The two dewatering technologies in consideration can have varying impacts on the design of other facilities at the LOWRF. Such facilities include the utility water system, the plant

drain pump station, and the odor control facility. The two technologies have significantly different washwater demands (flow and pressure), which affect the design of both the utility water system and the plant drain pump station as the former provides the necessary washwater and the latter handles the return flow including the dewatering filtrate. In addition, the screw presses are self-contained, whereas the BFPs are open vessels, which markedly increase the odor control requirement.

6.6 LAYOUT

As currently envisioned and as shown on Figure 6.1, the sludge aeration blowers and the dewatering feed pumps will be located on a pad with a canopy in close proximity to the sludge storage tanks. The polymer feed pumps, dewatering equipment and the dewatered cake conveyors will be located inside the Dewatering Building. A truck loading pad would be located adjacent to the Dewatering Building. Figures 6.4 and 6.5 show a conceptual plan and a corresponding section of the Dewatering Building, respectively.

Figure 6.6 shows a preliminary truck route through the plant.

6.7 CONTROL NARRATIVES

This section provides a preliminary control narrative for each of the solids handling processes and associated support facilities. The control narrative describes how the system is intended to be controlled during normal operating conditions. In general, equipment and processes would be in the remote automatic mode, and the Plant programmable logic controller (PLC) would control them via the supervisory control and data acquisition (SCADA) system.

6.7.1 Dewatering Feed Pumps

Dewatering feed pumps will pump secondary sludge from two sludge storage tanks to the dewatering equipment. The dewatering feed system will consist of two VFD-driven, positive-displacement pumps (one duty and one standby). The pumps will share a common suction header that is connected to the two tanks. Similarly, the common discharge header from the pumps will be connected to both dewatering units. Under normal operating conditions, the dewatering feed pumps will be controlled as follows.

The operator will select duty/standby designations for the pumps and enter the desired flow rate for the duty pump. The duty pump will operate, withdraw the thickened WAS from one of the sludge storage tanks, and discharge to one of the two dewatering units (based on a predetermined sequence and combination). The isolation valves associated with the online storage tank, the duty pump, and duty dewatering unit will be opened prior to each pump start. The valves will be closed following each pump stoppage.

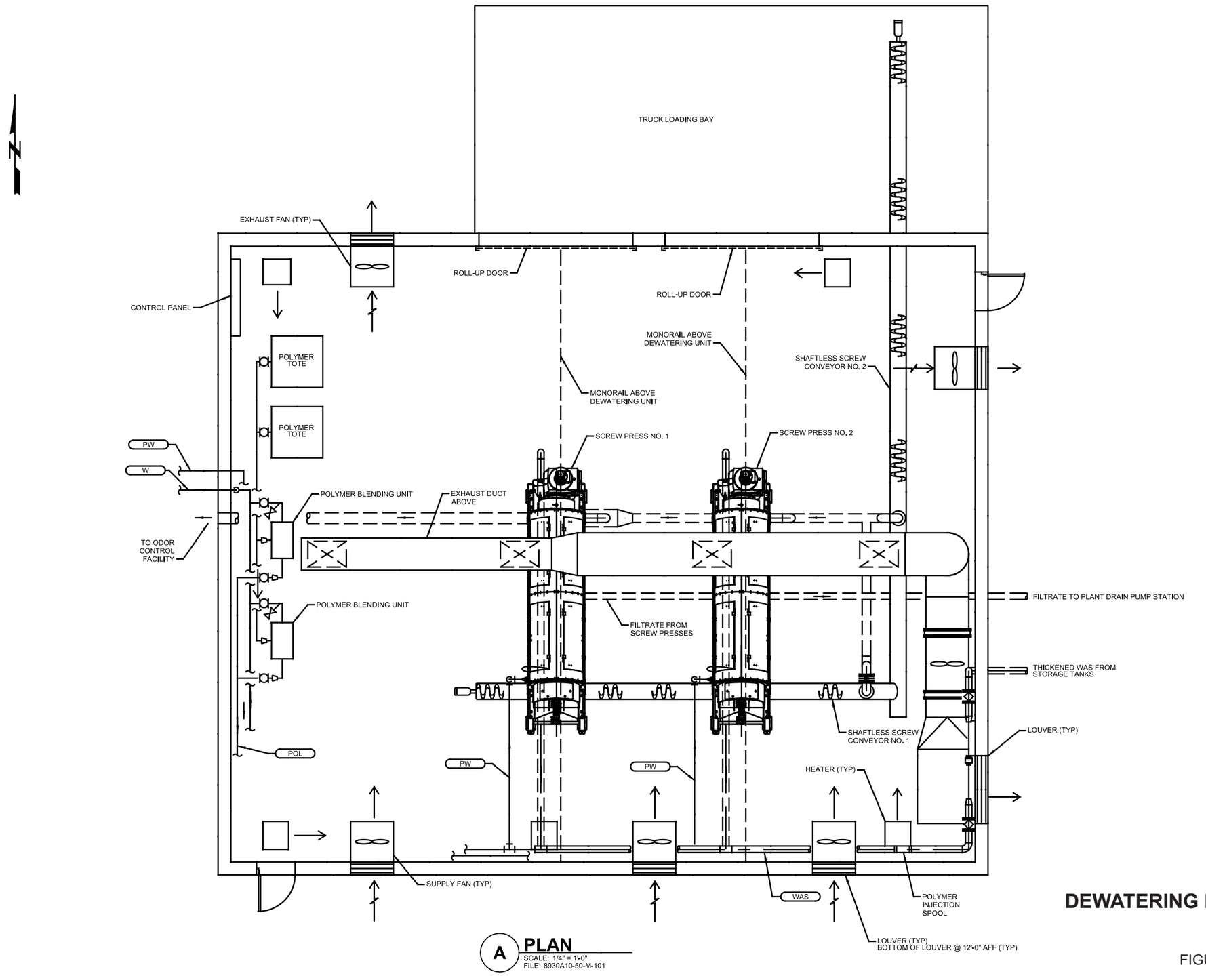

A **PLAN**
SCALE: 1/4" = 1'-0"
FILE: 8930A10-50-M-101

DEWATERING BUILDING PLAN

FIGURE 6.4

86-SanLuisObispo9-12F6.4-8930A10.ai

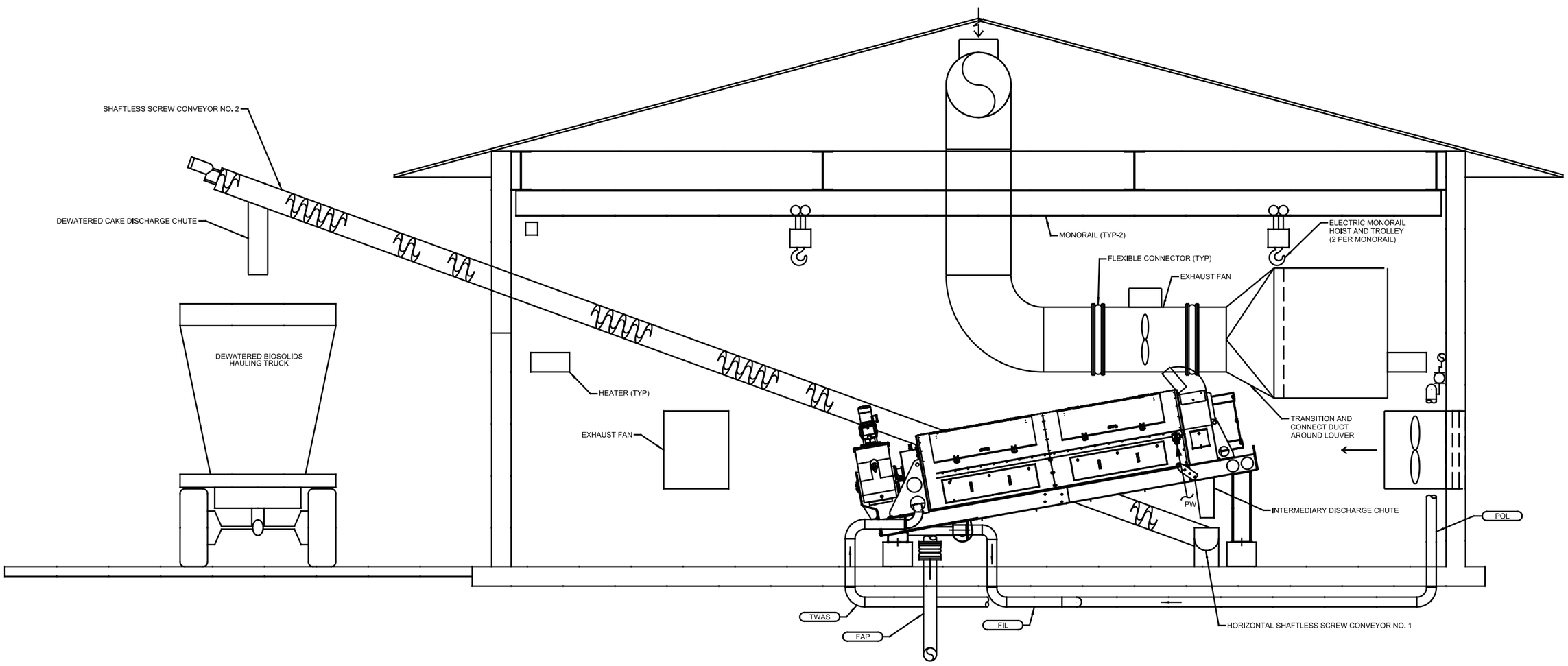

DEWATERING BUILDING SECTION

FIGURE 6.5

86-SanLuisObispo9-12F6.5-8930A10.ai

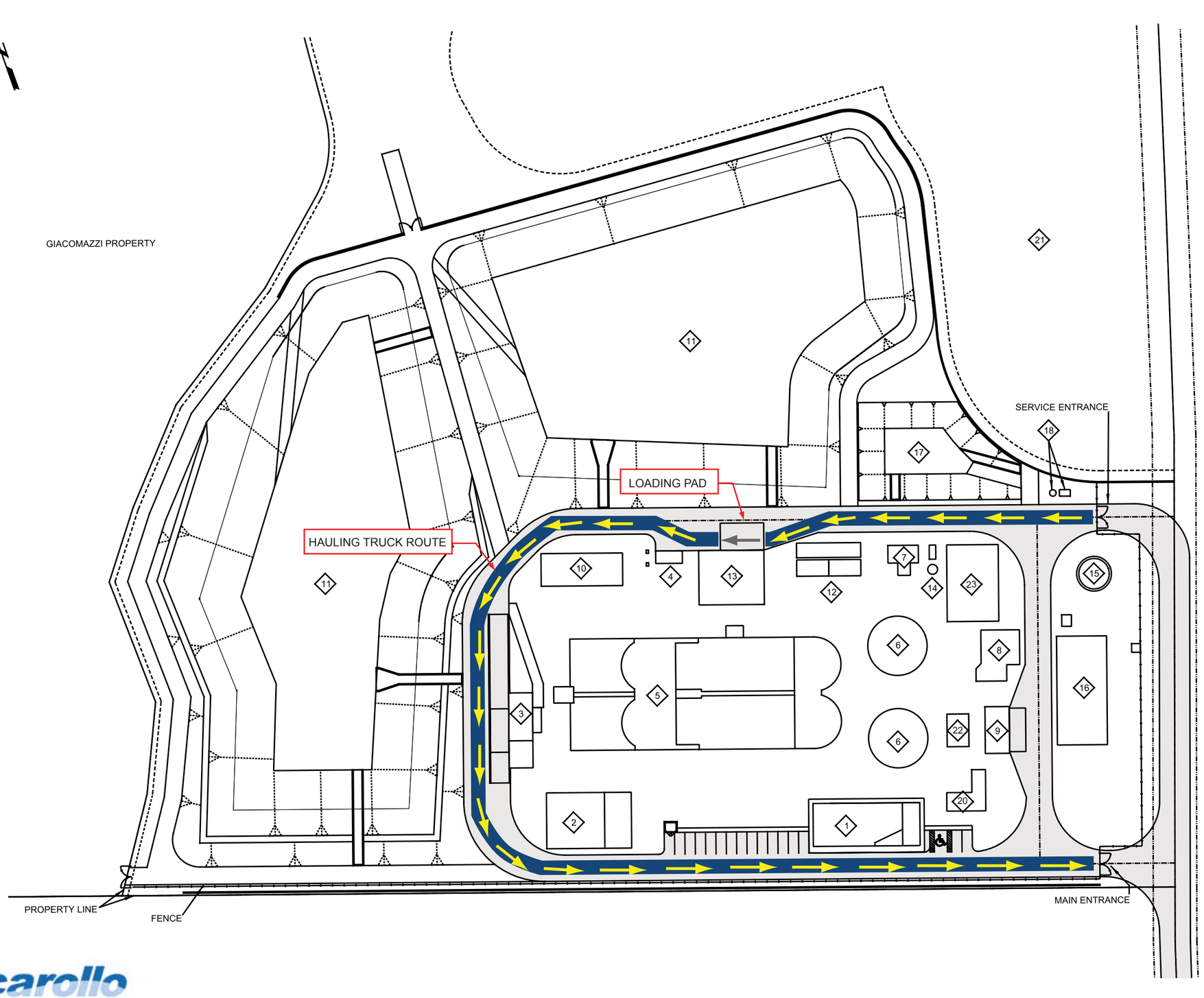

FACILITIES:

1. ADMINISTRATION BUILDING
2. MAINTENANCE BUILDING
3. INFLUENT METER VAULT/HEADWORKS/SEPTAGE RECEIVING
4. ODOR CONTROL FACILITY
5. OXIDATION DITCH
6. SECONDARY CLARIFIERS
7. RAS/WAS PUMP STATION
8. TERTIARY FACILITY
9. CHEMCIAL FACILITY
10. EFFLUENT PUMP STATION
11. REW STORAGE PONDS
12. SOLIDS STORAGE TANKS
13. DEWATERING BUILDING
14. PLANT DRAIN PUMP STATION
15. WATER STORAGE TANK
16. ELECTRICAL BUILDING
17. STORM WATER RETENTION POND
18. STORM WATER PUMP STATION
19. GROUNDWATER WELL
20. FILTER INFLUENT PUMP STATION
21. DESIGNATED ENVIRONMENTALLY SENSITIVE HABITAT AREA.
22. FUTURE FLOCCULATION BASIN
23. UV FACILITY

CAKE HAULING TRUCK ROUTE

FIGURE 6.6

86-SanLuisObispo9-12F6.6-8930A10.ai

carollo
Engineers...Working Wonders With Water™

COUNTY OF SAN LUIS OBISPO

Operation of the dewatering feed system will be initiated when the dewatering equipment is called to start based on signals transmitted from the dewatering equipment vendor-supplied PLCs to the Plant PLC. The pump speed will be controlled to maintain the sludge flow rate based on the operator-adjustable setpoint.

The dewatering feed system will stop at the first instance of one of the following conditions:

- The dewatering equipment is called to stop.
- A low-low level is reached in the sludge storage tank that is being dewatered.
- A common fail alarm for the dewatering feed system is annunciated.
- If the standby pump does not start within a preset time after failure of a duty unit.
- A common fail alarm for the dewatering system is annunciated.

6.7.2 Dewatering Polymer System

Polymer is used to chemically condition the sludge stream upstream of dewatering, which provides additional thickening of the sludge. The dewatering polymer system will include two storage tote bins and two polymer blending units. The dewatering polymer blending units (PBU) will be used to activate and feed polymer to the dewatering feed stream. The polymer blending units will be configured as duty/standby with automatic switchover capability.

The polymer flow from the totes will be metered by the polymer metering pump included in the PBU. The metering pump will have variable speed control. The polymer dosage will be entered at the equipment's local control panel (LCP) for automatic flow-pacing.

6.7.3 Dewatering Units

The dewatering system will consist of at least two dewatering units. The final technology selection will be made during the D/B phase.

A master LCP provided by the manufacturer of the dewatering equipment will normally control the entire dewatering and cake conveyance system including the Dewatering Feed Pumps, Dewatering Polymer System, and cake conveyors.

Normally, the LCP/PLC will start and stop the duty Dewatering Feed Pump and the duty PBU as part of the dewatering system's predetermined startup and shutdown sequences.

The speed of the duty Dewatering Feed Pump will be automatically controlled to provide the sludge flow-rate entered by the operator.

6.7.4 Sludge Cake Conveyance and Storage

Sludge cake discharged from the dewatering equipment will be conveyed into a hauling truck via two shaftless screw conveyors operating in series. The status of the dewatering

equipment and the screw conveyors and will be monitored at the SCADA. Upon failure of any conveyor, the PLC will shut down the dewatering equipment.

6.7.5 Aeration Blower System

Two aeration blowers, one duty and one standby, will serve the two sludge storage tanks. The duty unit will supply air to one tank at a time and alternate between the two tanks. The operator will select duty/standby designations for the blowers via software switch from the LCP. During decanting, air to the storage tank being decanted will be suspended either manually or automatically. Upon failure of a duty unit, the standby unit will come online.

6.8 UTILITIES

Utility services needed at the solids handling facilities include utility water (UW), potable water, and electricity.

6.8.1 Utility Water

UW is also referred to as plant water. Standard hose bibs shall be provided throughout the Dewatering Building and at the storage tank area for general wash down. UW shall be hard piped to the dewatering units for washwater and equipment cleaning cycles.

6.8.2 Potable Water

An emergency eye-wash and shower unit shall be provided at the Dewatering Building. It requires potable water use.

6.8.3 Electricity

Electrical outlets shall be provided throughout the solids handling facilities to facilitate operations and maintenance (O&M) activities.

ELECTRICAL, INSTRUMENTATION, AND CONTROL

7.1 PURPOSE

The purpose of this chapter is to describe the necessary electrical, instrumentation, and control systems at the San Luis Obispo County's (County) proposed Los Osos Water Recycling Facility (LOWRF) and present their preliminary design criteria. As such, it establishes a preliminary basis for the design of these systems and provides guidance and direction to the subsequent phases of this project.

7.2 OVERVIEW

The normal power for the LOWRF will be supplied by the local power utility company, Pacific Gas & Electric Company (PG&E). Since the LOWRF is a green-field facility, a new service will be required. The service connection point will be near the intersection of Los Osos Valley Road (LOVR) and Clark Valley Road. The service entrance equipment will be located in an electrical building at the LOWRF. A standby generator will be provided to support essential and critical loads and sustain plant operation in the event of a power outage.

Concurrent to the LOWRF project, the County is implementing a separate project to construct the collection system for the LOWRF. Referred to as the Los Osos Wastewater Collection System (LOWCS) Project, it includes several raw wastewater lift stations and standby generator facilities, and is currently under construction. For standardization and to control the LOWCS facilities from the LOWRF, the County desires that the LOWRF design relative to the instrumentation and control system is consistent and compatible with that of the LOWCS; for example, once the programmable logic controllers (PLCs) for the LOWCS project are selected, the LOWRF project will require the same PLCs to be used in the plant. Recognizing the need for project coordination, the overall supervisory control and data acquisition (SCADA) system that would serve the LOWRF and the LOWCS has been conceptualized and documented in a technical memorandum (TM) issued in May 2011. This Pre-design SCADA TM for the Los Osos Wastewater Project is included as Appendix C. The subsequent preliminary design efforts have identified that the LOWRF project should provide and configure the LOWCS SCADA workstation at the West Paso/Baywood Standby Power Building. The LOWCS project will install the SCADA fiber-optic cables associated with its facilities up to the intersection of LOVR and Clark Valley Road. The LOWRF project will extend the fiber-optic systems to the site for tie-in with its SCADA system. Figure 7.1 illustrates the configuration of the overall SCADA system envisioned during preliminary design.

7.3 ELECTRICAL

This section summarizes the results of the preliminary design efforts performed for the electrical system and provides the design criteria for the various electrical system components.

7.3.1 Electrical Service

The County has initiated preliminary discussions with PG&E in order to establish a new electrical service at the LOWRF. The following is a synopsis of these preliminary discussions:

- PG&E will not require a distribution line extension application to be filed as it can perform the work under a new work order number using the existing account that the County established for the LOWCS project.
- The design/build (D/B) team will be responsible for construction of the new electrical ductbank from the intersection of LOVR and Clark Valley Road to the new service equipment at the LOWRF. Concrete pull boxes must be provided every 600 feet.
- PG&E will be responsible for installing a pad-mounted service transformer at the LOWRF and pulling conductors from the 21-kV overhead lines to the service entrance switchgear at the LOWRF.
- The D/B team will be responsible for installing a lockbox near the main entrance gate for use by PG&E. PG&E must be granted access to the switchgear for maintenance.
- A possible source of temporary power for use during construction is an easement west of the Los Osos Mortuary and Memorial Park.

7.3.2 Power Distribution

As part of preliminary design, an equipment list was developed for the LOWRF. The list includes all major equipment and devices that require power. It also categorizes the loads based on type and criticality as critical process, non-critical process, or support system loads. Since backup equipment does not typically operate in parallel with duty units and some duty equipment runs only intermittently, the actual operating load at a plant is less than the total connected load. The ratio of the operating load to the connected load is defined as the load demand factor. The load demand factor is plant-specific and depends on plant capacity, processes being utilized and wastewater flow, among others. Since the LOWRF is a new facility, a conservative approach was used to estimate the maximum operating loads. More specifically, an overall load demand factor of 70 percent was assumed for the LOWRF.

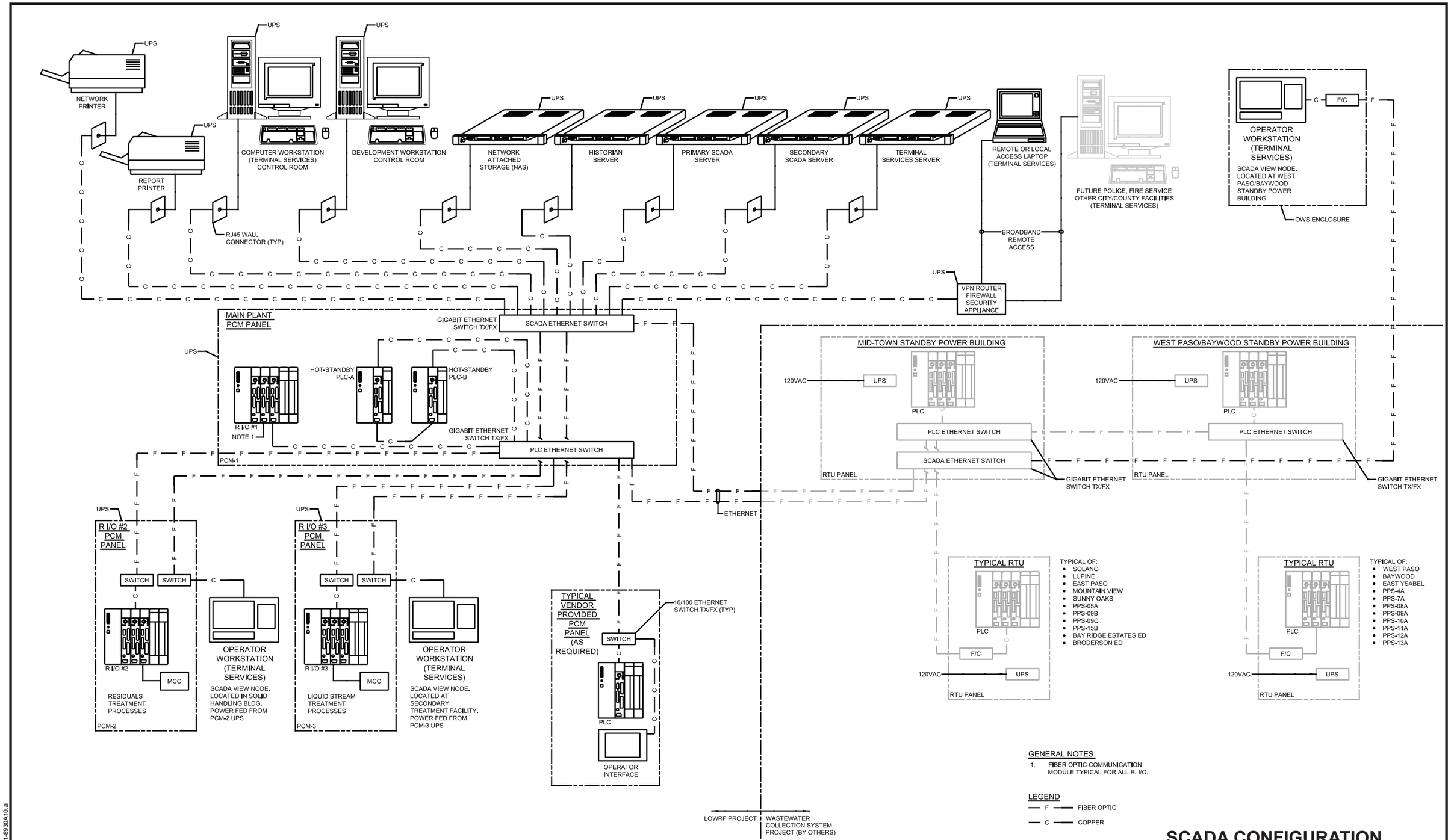

GENERAL NOTES:

1. FIBER OPTIC COMMUNICATION MODULE TYPICAL FOR ALL R. I/O.

LEGEND

F — FIBER OPTIC

C — COPPER

SCADA CONFIGURATION

FIGURE 7.1

86-SanLuisObispo9-12F7.1-8930A10.ai

Table 7.1 provides the cumulative load anticipated at the LOWRF for each category group.

Table 7.1 Preliminary Load Analysis San Luis Obispo County

Load Classification	Connected Load (kVA)	Load Demand Factor	Operating Load (kVA)
Critical Process Loads	633	0.7	443
Non-Critical Process Loads	237	0.7	166
Support Systems/Buildings	389	0.7	272
TOTAL	**1,259** (1,514 A, @ 480 V, 3-Ph, 3-W)		**881** (1,060 A @ 480 V, 3-Ph, 3-W))

This analysis indicates that the normal operating load would not exceed 881 kVA, and therefore, the power distribution system should be configured as a 480-Volt, 3-Phase, 3-Wire system. As configured, the system should provide sufficient spare capacity to accommodate additional loads as currently planned to accommodate future demands.

7.3.3 Expansion

As currently envisioned, future expansion of the LOWRF will primarily consist of adding a 75-hp pump at the Effluent Pump Station. As such, the motor control center (MCC) serving the effluent storage and pumping facilities shall be sized to support this future equipment, in addition to providing the required 25 percent spare capacity. Further, spare conduits shall be installed to facilitate the installation of the pump in the future.

7.3.4 Standby Generation

In general, process PLCs automatically shed non-critical loads in order to protect and maintain essential plant functions during a power outage. For the LOWRF, the critical process and essential support loads identified in the equipment list were used to estimate the size of the needed standby generator. Table 7.2 summarizes the cumulative loads that would need to be supported in the event of a loss of normal power. As shown in the table, the operating load during a power outage would be approximately 572 kW (based on a 480-Volt power distribution system), and therefore, one 600-kW generator would be appropriate for the LOWRF. During final design, the D/B team shall confirm the required generator size.

Table 7.2 Preliminary Standby Generator Analysis San Luis Obispo County			
Load Classification	**Connected Load (kVA)**	**Operating Demand Factor**	**Operating Load (kVA)**
Critical Process Loads	633	0.7	443
Support Systems/Buildings	389	0.7	272
TOTAL	1,022 (818 kW, 480 V, 0.8 power factor)		715 (572 kW, 480 V, 0.8 power factor)

Start and stop control of the standby generator shall be through the associated switchgear's PLC-based automatic transfer control system.

In addition, local uninterruptible power sources (UPSs) shall be provided to backup critical support systems, such as the SCADA control center to be located at the Administration Building.

7.3.5 Electrical Building

Based on the overall facility size, power distribution at the LOWRF should be centralized and originate from one electrical building. Under this concept, the electrical building would house all major electrical equipment and panels, such as the service entrance lineup, standby generator, MCCs, and power/lighting panels. Exceptions would include the main service transformer (to be located outside to the electrical building) and any remote power panels, such as those that would be located at the Administration and Maintenance Buildings.

Alternatively, if warranted based on the final facility layout to be developed by the selected D/B team, some remote loads may be supported by a dedicated MCC installed in close proximity. A possible example might be the ultraviolet (UV) reactors.

To reduce personnel exposure to possible arc flash hazards, electrical distribution equipment shall be located in dedicated electrical rooms. Such a room shall be laid out so as to permit entry from the exterior only. Further, entry into such a room shall be limited to authorized personnel only and shall require wearing the appropriate personnel protective equipment (PPE).

7.3.6 Underground Raceway Systems

Underground conduits shall be in duct banks that are concrete encased with rebar reinforcing. Duct bank construction shall conform to the following:

- Reinforcing steel shall be minimum #4.
- Continuously form all duct banks. Using the trench as the duct bank form is not acceptable.

- Install a #4/0 bare copper ground cable in each duct bank section.
- Separate conduits using manufactured plastic spacers.
- Install duct banks to be self-draining with a slope of 1/4 inch per 10 feet. Slope duct banks away from buildings.
- Minimum conduit size in the duct banks shall be 2 inches.

Two separate underground raceway systems are required. Each system includes dedicated ductbanks and a manhole/pull box network and supports one of the following:

- 480-V power and control circuit system
- Fiber-optic cabling, analog signals, DC control circuits, and communication systems

7.3.7 Harmonics

In variable frequency drive (VFD) applications, VFD manufacturers shall be required to provide additional harmonic mitigating components integral with each VFD controller in order to comply with IEEE 519, which is entitled “IEEE Recommended Practices and Requirements for Harmonics Control in Electrical Power Systems.”

To eliminate harmonics associated with UV systems, individual isolation transformers for each UV system will be required.

7.3.8 Lighting

Building lighting shall comply with Title 24 of the California Code. In addition, in accordance with Condition of Approval No. 50 of the California Coastal Commission’s Coastal Development Permit (CDP) A-3-SLO-09-055/069 issued for the project, the facility lighting design shall comply with Estero Area Plan AES-5, which has the following criteria:

- The lighting plan shall meet County design standards.
- Include proper shielding, proper orientation, and applicable height standards.
- All lighting fixtures shall be shielded so that neither the lamp nor the related reflector interior surface is visible from adjacent properties or public areas.
- Light hoods shall be dark-colored.
- Lighting associated with all project components shall be the minimum needed for plant operation and for emergency situations.

Furthermore, the exterior lighting shall be shielded and be of the lowest intensity feasible in accordance with Special Condition 1g of the CDP. Exterior lighting shall be operated automatically based on timer and motion sensors, to turn off or reduce intensity as appropriate (i.e., at nighttime).

Light intensity for interior spaces shall be as follows:

- Process Areas: 30 to 50 foot-candles
- Electrical Rooms: 50 foot-candles
- Maintenance Areas: 30 to 50 foot-candles

Interior area lamps shall be metal halide, fluorescent, or LED that produce white light. High-pressure sodium or other lamps that produce yellow or colored light shall not be used for interior lighting. Outdoor areas shall use either metal halide or LED lamps.

7.3.9 Grounding

A ground ring shall be constructed around each electrical building. Grounding electrodes shall be as required by the National Electrical Code (NEC) and include the concrete encased electrode. Installation shall conform to the following criteria:

- Grounding connections shall be compression type.
- Ground cables used for ground rings and grounding electrode conductors shall be minimum #4/0 bare copper.
- All grounding materials shall be copper.

7.3.10 Electrical Studies

The D/B team shall perform the following electrical studies using the latest version of the ETAP software package:

- Fault current
- Protective device coordination
- Load flow

Arc flash: Include providing arc flash labels. In addition, the studies shall be performed, stamped, and signed by a registered professional engineer in the state of California.
A minimum of 10 years of experience in power system analysis is required for the individual in responsible charge of the studies. Credentials of the individual(s) performing the study shall be submitted to the County for approval. The studies shall be conducted by an independent firm not affiliated with the equipment manufacturer.

7.3.11 Electrical Equipment Acceptance Testing

Acceptance testing shall be performed on all electrical equipment in accordance with the manufacturer’s requirements and the latest version of the InterNational Electrical Testing Association (NETA) Acceptance Testing Specification.

7.3.12 Design Criteria

This section summarizes the electrical system design criteria that are to be used for the design and construction of the LOWRF.

7.3.12.1 Codes

The codes and standards listed in Table 7.3 shall be used for the electrical design of this project. Where codes or standards conflict with one another, the more stringent criteria shall be applied to the design.

Table 7.3 Design Criteria Summary – Electrical, Instrumentation, and Control Codes San Luis Obispo County

Design Parameter	Applicability	Criteria Intention: "Fixed" Criteria for D/B Team	Criteria Intention: "Baseline" Design Assumption
NFPA 70 – National Electrical Code, 2008 Edition	All Structures	X	
NFPA 820 – Fire Protection in Wastewater Treatment and Collection Facilities, 2012 Edition	All Structures	X	
Title 24, Part 6, of the California Code of Regulations, 2008 Standards	All Buildings	X	
Title 22, California Code of Regulations, Article 8, General Requirement of Design	Tertiary Filter Process	X	
IEEE 519, IEEE Recommended Practices and Requirements for Harmonics Control in Electrical Power Systems	VFDs	X	

7.3.12.2 Electrical Distribution

Table 7.4 summarizes the design criteria for the electrical distribution equipment.

Table 7.4 Design Criteria Summary – Electrical Distribution Equipment San Luis Obispo County

Design Parameter	Criterion	Criteria Intention: "Fixed" Criteria for D/B Team	Criteria Intention: "Baseline" Design Assumption
Distribution Voltages	480 Volt, solidly grounded, 3-phase, 3-wire; 208Y/120 volts, solidly grounded, 3-phase, 4-wire	X	
Service Entrance Equipment	600 Volt, dead-front metal enclosed switchgear with automatic transfer system, indoor mounted	X	
Standby Power	One diesel-fueled, engine-generator system, indoor mounted	X	

Table 7.4 Design Criteria Summary – Electrical Distribution Equipment San Luis Obispo County			
		Criteria Intention	
Design Parameter	Criterion	"Fixed" Criteria for D/B Team	"Baseline" Design Assumption
Diesel Fuel Storage Tank(s)	Support 24-hour operation of the standby generator at full rated load	X	
Group Mounted Motor Controls – Motor Control Centers	Low-voltage motor control centers, indoor mounted, minimum 25 percent spare capacity	X	
Motor Starters	NEMA combination type with motor circuit protector and control power transformer	X	
VFDs			
Greater than 50 hp	18-pulse VFDs that comply with IEEE total harmonic distortion (THD) guidelines, with load reactors	X	
50 hp or less	Sinusoidal pulse width modulated (PWM) type drive with six-pulse insulated gate bipolar transistor (IGBT) power section and with 3 percent input and 3 percent output line reactors	X	
Power Panel Boards	480 volt, 3-phase, indoor mounted, minimum 25 percent spare capacity	X	
Lighting Panel Boards	208Y/120 volt, 3-phase, indoor mounted, minimum 25 percent spare capacity	X	

Table 7.5 summarizes the voltages to be used in various applications of electrical distribution.

Table 7.5 Design Criteria Summary – Voltage Requirements San Luis Obispo County			
		Criteria Intention	
Design Parameter	Value	"Fixed" Criteria for D/B Team	"Baseline" Design Assumption
Lighting	120, 208 volts, single-phase	X	
Receptacles	120, 208 volts, single-phase	X	
Motors, Less Than 1/2 hp	120 volt, single-phase	X	
Motors, 1/2 hp or Larger	480 volt, 3-phase	X	
Motor Control	120 volt, single-phase	X	

Table 7.6 sets forth the design criteria for the electrical motors that are 1 hp or greater.

Table 7.6 Design Criteria Summary – Motors Greater Than 1 hp[(1)]
San Luis Obispo County

Design Parameter	Criterion	Criteria Intention: "Fixed" Criteria for D/B Team	Criteria Intention: "Baseline" Design Assumption
Type of Motor	"NEMA Premium Efficiency" percent listed in NEMA MG-1	X	
Service Factor	1.15 on sine-wave power; 1.0 when VFD-driven	X	
Starting Torque	Not less than the values specified in NEMA MG-1	X	

Notes:
(1) For constant speed motors that are 50 hp or larger, reduce-voltage solid-state motor starters should be used.

Table 7.7 provides the design criteria for the electrical conduits and wires.

Table 7.7 Design Criteria Summary – Electrical Conduits and Wires
San Luis Obispo County

Design Parameter	Criterion	Criteria Intention: "Fixed" Criteria for D/B Team	Criteria Intention: "Baseline" Design Assumption
Underground Conduit	PVC Schedule 40	X	
Exposed Conduit - General	Galvanized Rigid Steel	X	
Exposed Conduit – Wet, Corrosive, or Classified Areas	PVC-Coated Rigid Steel	X	
Exposed Conduit – Interior areas of Maintenance Building	PVC-Coated Rigid Steel	X	
Exposed Conduit – Interior areas of Administration Building only	Electric Metallic Tubing (EMT)		X
Power and Control Conductors	XHHW-2 insulation, 600 V rated, suitable for wet locations	X	
Minimum Power and Control Conductor Sizes	#12 AWG for power; #14 AWG for control	X	
Instrumentation Conductors	600 V rated, suitable for wet locations, flame-retardant PVC insulation – 15 mils nominal thickness	X	
Minimum Instrumentation Conductor Size	#16 AWG, stranded and tinned	X	

7.4 INSTRUMENTATION AND CONTROL

The Instrumentation and Control System is the primary interface between the plant process and the operators, and must be designed to meet the specific needs and desires of the operators. The Instrumentation and Control System design philosophy shall follow a three-tiered configuration as described below. With regard to the SCADA system, the criteria described in the SCADA Pre-design TM shall also be satisfied.

7.4.1 Three-Tiered Control Concept

7.4.1.1 Tier One – Manual Field Control

This tier deals with elements closest to the end device from a control viewpoint. At each electrically actuated device, whether it is a motor or valve, there is a Local-Off-Remote (LOR) switch. In the Local position, this switch allows an operator in the field to manually start or stop a motor and open or close a valve. All of these functions are hardwired functions that are completely independent of the plant's overall process controller.

The reason behind having these devices for manual control is twofold:

- For maintenance purposes the plant staff can exercise any piece of electrical equipment locally at that piece of equipment for troubleshooting, testing, calibrating, and other maintenance purposes;
- If the overall control system were to malfunction, the operators could remove the plant control system from the control loop and operate the entire facility manually at each device.

This manual control system is, in fact, strictly manual and intended for use by operators who are knowledgeable in the operation and control sequence for the equipment.

7.4.1.2 Tier Two – PLC Automation

This tier deals with overall automation level of control for the facility. For the LOWRF, this level of control is primarily designed around PLCs. PLCs and workstations constitute the major portion of the automated control system. All automated control functions are contained in the PLC memory and logic.

Workstations may consist of either of the following:

- Human Machine Interface (HMI): Flat panel interfaces that operate directly on the PLC local area network (LAN).
- Operator Interface Terminal (OIT): Personal computer (PC) based SCADA terminals.

The use of PLCs for this purpose greatly improves the reliability of the control system.

7.4.1.2.1 *Control System Topology*

The number and location of the PLCs throughout the plant is dependent upon the topology of the facility and shall be determined for the LOWRF by the D/B team. The control system is essentially configured as a distributed PLC control system, in that the PLC closest to the process element is the point of connection for that element to the system. All PLCs are linked through the PLC manufacturer's LAN to one another to ensure that the data collected at one PLC is available for control at any other PLC in the system. Using a distributed PLC control system substantially reduces field wiring while maintaining flexibility.

7.4.1.2.2 *Control System Redundancy*

The PLC systems shall include at least one spare input/output (I/O) module for each I/O type used in the system. Spare central processing units and power supplies are required for each type and size used in the system. If a PLC I/O card were to fail the PLC system is taken off line and the card replaced, and then the system is restarted. If the central processing unit (CPU) were to fail the PLC system is taken off line, the CPU replaced and the operation program is reloaded into the CPU through the programming workstation. For the LOWRF, a hot backup PLC configuration should be provided.

7.4.1.3 Tier Three – SCADA System

In general, the SCADA system is used to log and record various plant processes, such as influent flow rate, effluent turbidity, and effluent chlorine residual. The system includes personal computers that are running a SCADA-type software package. The SCADA software package typically contains alarm screens, plant process screens, and trends of plant variables. The SCADA system is connected to the PLC system though a communication LAN. The SCADA equipment resides on the LAN and periodically polls the PLCs for alarms, status, values, etc., for the purposes of archiving and reporting of the plant process variables. Additionally, the SCADA system is used by the operators as a means of entering and setting plant process variable setpoints, commanding equipment on or off, etc., from a single location in the facility.

To be more specific, the desired SCADA system for the LOWRF has been conceptualized and documented in the Pre-design SCADA TM, Appendix C. A summary of the findings from this TM and from the subsequent preliminary engineering efforts, which describes the requirements for the SCADA system at the LOWRF, is as follows:

- Workstations at the LOWRF are to provide monitoring and control of the plant processes at the LOWRF as well as of the remote facilities at the LOWCS.
- The LOWRF project shall provide and install a remote computer workstation at the West Paso/Baywood Standby Power Building in the LOWCS.
- Two fiber-optic networks from the LOWCS are to be extended from the intersection of LOVR and Clark Valley Road to the LOWRF: one for PLC-to-PLC traffic; one for SCADA to SCADA, SCADA to PLC, and other miscellaneous communications.

- The Electrical Building at the LOWRF shall house the main PLCs and be the interface for the LOWCS' two fiber-optic networks.
- The Administration Building shall house the SCADA equipment consisting of:
  - Primary and secondary SCADA servers (to be rack mounted)
  - SCADA application software (Wonderware® InTouch®)
  - Terminal services server
  - Historian server
  - Network attached storage
  - Computer workstation
  - Development workstation
  - Network printer
  - Report printer
  - Virtual private network (VPN) router
  - UPS

7.4.1.3.1 *LOWCS Fiber-Optic Extension*

As previously noted, the LOWRF D/B project shall extend the fiber-optic cable installed under the LOWCS Project to the LOWRF. The LOWCS project will terminate the fiber-optic cable for the collection system in a fiber-optic manhole located at the intersection of LOVR and Clark Valley Road. The LOWRF D/B team shall provide the design and construction of a new underground 4-inch conduit and associated fiber-optic cable from this manhole to the Electrical Building.

7.4.2 Process Control

7.4.2.1 Local Control Devices

Field devices for local control of equipment shall be provided in accordance with Table 7.8.

Table 7.8 Field Control Devices for Equipment San Luis Obispo County

Equipment	LOR with SS(1)	LOR with OSC(2)	On-Off
Pumps	X		
Gates and Valves		X	
VFDs, RVSSs, and FVNRs	X		
Sump Pumps	X		
Ventilation Fans			X

Notes:
(1) LOCAL-OFF-REMOTE with START-STOP.
(2) LOCAL-OFF-REMOTE with OPEN-STOP-CLOSE.

7.4.2.2 SCADA Control and Monitoring Devices

7.4.2.2.1 *HAND-OFF-AUTO with START-STOP*

Provide HAND-OFF-AUTO (HOA) and START-STOP (SS) software selections accessed from an OIT as follows:

1. HAND: Enables remote manual control of equipment where control decisions are made by an operator through additional software selections such as SS.
    a. START: Enables remote manual start of equipment
    b. STOP: Enables remote manual stoppage of equipment
2. OFF: Disables remote control of equipment in both manual and automatic modes, and prohibits the equipment from running.
3. AUTO: Enables the normal, automatic control mode for the equipment, which allows full PLC control in response to process conditions and programmed sequences.

Provide remote monitoring of equipment and process operation accessed from an OIT as follows:

1. Display position of the LOR switch in the field.
2. Display run status of equipment.
3. Use run status to calculate total run time and daily run time, and to count total starts and daily starts.
4. Provide time stamp for each start.
5. Provide software programming to prevent exceeding the manufacturer's recommended maximum motor starts per hour.

7.4.2.2.2 *HAND-OFF-AUTO with OPEN-CLOSE*

Provide HOA and OPEN-CLOSE (OC) software selections accessed from an OIT similar to the HOA and SS software selections, except that OC software selections are provided instead of SS.

1. OPEN: Enables remote manual opening of gate or valve.
2. CLOSE: Enables remote manual closing of gate or valve.

Provide remote monitoring of gate or valve actuators accessed from an OIT similar to what is described under the HOA with SS selections.

7.4.2.2.3 *Permissives*

The D/B project shall implement software permissives where necessary to place equipment in a safe mode in response to impending hazardous process conditions. Software permissives shall be applicable whether equipment is operating in HAND or AUTO. Where

necessary, provide a selection to bypass or disable software permissives for maintenance functions. This option shall be selectable only in HAND.

7.4.2.2.4 *VFD Speed Control*

VFD-driven motors shall be provided with the capacity to modulate speed, using jog and hold, or PID control algorithms to maintain process conditions as necessary. Speed variation shall be limited within a pre-defined range where the minimum speed will be determined by equipment manufacturer and the maximum speed is 100 percent.

7.5 FIELD WIRE TAGGING CONVENTION

The D/B project shall consistently follow a field tagging convention for power and control wires. The wiring convention shall be in a 'TO-FROM' format at both ends of the cable as shown below.

(ORIGIN LOC.)–(ORIGIN TERM.) <> (DEST. LOC.)–(DEST. TERM.)

Where:

ORIGIN LOC.	=	Designation for originating panel or device
ORIGIN TERM.	=	Terminal designation at originating panel or device
DEST. LOC.	=	Designation for destination panel or device
DEST. TERM.	=	Terminal designation at destination panel or device or PLC I/O address at destination panel

STRUCTURAL AND ARCHITECTURAL

8.1 PURPOSE

The purpose of this chapter is to summarize the structural and architectural design criteria that are to be used for the design and construction of San Luis Obispo County's (County) proposed Los Osos Water Recycling Facility (LOWRF). The project involves the construction of a new water reclamation plant that will be comprised of hydraulic process structures and support facilities.

In general, hydraulic process structures shall be constructed with reinforced concrete that is of durable design. Support facilities include buildings, exterior slabs, and shade structures. In general, buildings are to be constructed with materials, such as concrete, concrete masonry, and steel as required to withstand the service environment, as well as convey architectural concepts and function.

The following structural and architectural design criteria identifies required codes and standards, load criteria and material specific requirements for structural design, and building systems that address architectural requirements.

8.2 CODES AND STANDARDS

8.2.1 Codes and Materials Standards

The codes and standards listed in Table 8.1 shall be used for the structural and architectural design and construction for this project. Where codes or standards conflict with one another, the more stringent criteria shall be applied to the design/construction.

Table 8.1 Design Criteria Summary – Structural and Architectural Codes and Standards San Luis Obispo County

Design Parameter	Applicability	Criteria Intention: "Fixed" Criteria for D/B Team	Criteria Intention: "Baseline" Design Assumption
General			
2010 California Building Code (CBC)	All Structures	X	
San Luis Obispo County Code of Ordinances, Title 19	All Structures	X	
2010 California Fire Code	All Structures	X	
General Loading Requirements			
ASCE 7-05, Minimum Design Loads for Buildings and Other Structures	All Structures	X	

Table 8.1	Design Criteria Summary – Structural and Architectural Codes and Standards San Luis Obispo County		
		Criteria Intention	
Design Parameter	Applicability	"Fixed" Criteria for D/B Team	"Baseline" Design Assumption
Reinforced Concrete			
ACI 301, Specifications for Structural Concrete	All Concrete Construction	X	
ACI 318-08, Building Code Requirements for Structural Concrete	Buildings and Non-Liquid Bearing Structures	X	
ACI 350-06, Code Requirements for Environmental Engineering Concrete Structures	Liquid Bearing Tanks	X	
ACI 350.3-06, Seismic Design of Liquid-Containing Concrete Structures	Liquid Bearing Tanks	X	
Masonry			
ACI 530-08, Building Code Requirements for Masonry Structures	Buildings and Non-Liquid Bearing Structures	X	
ACI 530.1-08, Specification for Masonry Structures	Buildings and Non-Liquid Bearing Structures	X	
Steel			
360-05, Specification for Structural Steel Buildings	Steel framing	X	
341-05, Seismic Provisions for Structural Steel Buildings	Steel framing	X	
AISI S100-07, North American Specification for the Design of Cold-Formed Steel Structural Members	Cold-formed steel framing	X	
Aluminum			
AA ADM 1-05, Aluminum Association Aluminum Design Manual	Aluminum framing	X	
Wood			
AF & PA SDPWS-08, Special Design Provisions for Wind and Seismic	Wood-framed Lateral Force Resisting Systems	X	
AF & PA NDS-05, National Design Specification for Wood Construction	Wood framing	X	

8.3 LOAD CRITERIA

8.3.1 Dead Loads

Structures shall be designed to resist the effects of all dead loads. Dead loads shall include the following as a minimum:

- Weight of structure.
- Weight of all fixed construction, equipment, and fixtures, such as, platforms, walls, partitions, finishes, ceilings, mechanical and electrical equipment, equipment bases, and all permanent non-removable construction. Mechanical and electrical equipment that is mounted to a floor or slab may be considered as live load provided the equipment precludes any additional vertical floor loading within the footprint of the equipment.
- Weight of valves, pipes, pipe contents, and pipe supports.
- Weight of cable tray, conduit, cables, bus ducts, and other similar conduit routing systems.
- Weight of heating, ventilation, and air conditioning (HVAC) ducts.

All building roofs shall be designed for the additional dead load of solar panels and their associated equipment.

8.3.2 Live Loads

Live loads shall meet all of the applicable code requirements set forth in the referenced codes and standards listed in Section 8.2. Live loads provided in Table 8.2 shall be considered as minimum live loads for design.

Table 8.2 Design Criteria Summary – Live Loads San Luis Obispo County

Description	Value	Criteria Intention	
		"Fixed" Criteria for D/B Team	"Baseline" Design Assumption
Office Areas (office use)	50 psf / 2,000 lb conc. load	X	
Office Areas (computer use)	100 psf	X	
Catwalks	100 psf	X	
Egress Corridors/Stairs/Assembly Areas	100 psf	X	
Storage Areas (light)	125 psf	X	
Storage Areas (heavy)	250 psf	X	
Electrical/Control Rooms	250 psf	X	
Maintenance Garages	250 psf	X	
Process Areas and Pump Stations(1)	250 psf	X	

Table 8.2 Design Criteria Summary – Live Loads San Luis Obispo County			
		Criteria Intention	
Description	Value	"Fixed" Criteria for D/B Team	"Baseline" Design Assumption
Access covers at basins (non-egress locations)	20 psf / 500 lb conc. load	X	
Vehicle Loads		X	
Unrestricted Vehicular Access	AASHTO HS20 (highway rated if located in the road, otherwise off-highway rating)	X	
Gratings, Tread Plates, and Hatches	Minimum of 100 psf and 1,000 pound concentrated load(2)	X	
Roof (non-work area)	20 psf + equipment load	X	

Notes:
(1) Includes all gratings, tread plates, hatches, and floor coverings.
(2) But not less than loading for adjacent floor or grade. Deflection shall be limited to L/240 with 1/4-inch maximum.

Areas that will support equipment shall be designed for the uniform live load as a minimum. Actual equipment footprint and operating weights shall be obtained and compared against the uniform live load requirement. Where actual equipment footprint loadings exceed the uniform live load, the actual equipment loading shall be used in design. Floor or slab mounted equipment may be considered as live load where that equipment precludes any additional floor loading within the footprint of the equipment. Otherwise, equipment shall be treated as dead load and the structure shall be designed for the full applicable uniform live load.

Structures shall be designed to resist the effects of dynamic piping loads that include thrust due to internal pressure, thermal expansion and contraction, and the change in velocity of the pipe contents.

Structures shall be designed to resist the effects of loads from bridge cranes, jib cranes, fall prevention systems, and hoists. The live load shall be considered the rated capacity of the lifting or fall protection equipment. Load effects due to vertical, transverse, and longitudinal impact loading shall be considered in the structural design.

8.3.3 Seismic Design Criteria

The seismic design criteria listed in Table 8.3 is based on a preliminary geotechnical evaluation performed for the Giacomazzi site. The resulting geotechnical report is presented in Appendix E. These criteria shall be considered the "baseline" structural and architectural design criteria for the project. Prior to final design, a geotechnical investigation shall be conducted to verify the seismic design criteria. The recommendations of the

geotechnical investigation performed for the final design shall be considered as superseding the criteria set forth herein, subject to the review and acceptance by the County.

Table 8.3 Design Criteria Summary – Seismic Design Criteria San Luis Obispo County

Design Parameter	Value	Criteria Intention: "Fixed" Criteria for D/B Team	Criteria Intention: "Baseline" Design Assumption
Latitude	35.3097 N	X	
Longitude	120.8017 W	X	
Mapped Spectral Acceleration for Short Periods (S_s)	1.444g		X
Mapped Spectral Acceleration for 1-Sec Period (S_1)	0.541g		X
Site Class	Sd		X
Site Coefficient (F_a)	1.00		X
Site Coefficient (F_v)	1.50		X
Design Spectral Response Acceleration for Short Periods (S_{DS})	0.963g		X
Design Spectral Response Acceleration for 1-Sec Period (SD_1)	0.541g		X
Seismic Design Category	D		X
Seismic Importance Factor (I)	1.25	X	

8.3.4 Wind Design Criteria

The wind load design criteria listed in Table 8.4 shall be used for the structural and architectural design on this project.

Table 8.4 Design Criteria Summary – Wind Design Criteria San Luis Obispo County

Design Parameter	Value	Criteria Intention: "Fixed" Criteria for D/B Team	Criteria Intention: "Baseline" Design Assumption
Basic Wind Speed (3-sec gust)	90 mph	X	
Surface Roughness Category	C	X	
Exposure Category	C	X	
Wind Importance Factor (I)	1.15	X	

8.3.5 Soil Load Criteria

The “baseline” design assumption for the soil loads used in the design of facility structures shall comply with the recommendations set forth in the Preliminary Geotechnical Report Los Osos Wastewater Project Los Osos Mortuary, Giacomazzi, and Branin Properties San Luis Obispo County, California, prepared by Fugro West, Inc., dated July 17, 2007. This report is provided in Appendix E.

Prior to final design, a geotechnical investigation shall be conducted by the D/B team to verify the soil load criteria. The recommendations of the geotechnical investigation performed for the final design shall be considered as superseding the criteria set forth herein, subject to the review and acceptance by the County.

8.3.6 Vibration

Vibration due to reciprocating or rotating machinery shall be addressed as required to prevent transmission of vibration to structural elements where such vibration has the potential to damage the structure, affect the operation of sensitive equipment and instrumentation, or where it is considered to be a nuisance to plant personnel. Vibration shall be mitigated as required by passive and/or mechanical means. Passive means of vibration mitigation may include the provision of additional equipment base mass as required to offset the range of operating frequencies from the natural frequency of the supporting structure/foundation by margins recommended in ACI 350.4. Mechanical means of vibration mitigation may include, but may not be limited to, vibration isolation and energy dampening systems.

Consideration of equipment frequencies during the start-up phase of operation shall be considered as required to prevent resonance with the structure/foundation.

8.4 MATERIAL REQUIREMENTS

The following criteria for materials include strength and minimum size requirements deemed necessary for the construction of plant facilities. The codes and standards listed in Table 8.1 shall apply to the materials outlined in this section in addition to the standards identified hereafter.

8.4.1 Reinforced Concrete

Concrete and reinforcing steel shall comply with the material and minimum strengths set forth in Table 8.5. Provision of reinforcing steel and location of construction, contraction, and expansion joints in the concrete shall be made in a manner that limits formation and propagation of cracks. In general, construction joint locations shall not be spaced farther apart than 40 feet on center. All joint locations shall be submitted for review.

Table 8.5 Design Criteria Summary – Reinforced Concrete San Luis Obispo County			
		Criteria Intention	
Design Parameter	Value	"Fixed" Criteria for D/B Team	"Baseline" Design Assumption
f'c For All Structures, Unless Noted Otherwise	4,000 psi		X
f'c For Site Curbs and Gutters	3,000 psi	X	
f'c For Thrust Blocks, Pipe Encasement, Ductbanks, and Concrete Fill	2,500 psi	X	
Portland Cement	ASTM C150 Type II		X
Reinforcing Steel	ASTM A615 Grade 60	X	
Reinforcing Steel Subject to Welding	ASTM A706 Grade 60	X	

Where a geotechnical investigation finds the site soils contain elevated sulfate levels, the cement type, concrete strength, and water-cement ratio shall be adjusted in accordance with ACI 318 or ACI 350 as required for the exposed concrete.

8.4.2 Masonry

Masonry shall comply with the material and minimum strengths set forth in Table 8.6. Masonry construction shall be solid grouted and provided with reinforcing steel in the horizontal and vertical directions. In general, masonry control joints shall be provided at intervals that do not exceed 24 feet on center to limit the formation and propagation of cracks.

Table 8.6 Design Criteria Summary – Masonry San Luis Obispo County			
		Criteria Intention	
Design Parameter	Value	"Fixed" Criteria for D/B Team	"Baseline" Design Assumption
Specified Compressive Strength of Masonry, f'm	1,500 psi	X	
Concrete Masonry Unit Strength	1,900 psi	X	
Concrete Masonry Units	ASTM C90 Normal Weight	X	
Grout strength, f'c	2,000 psi	X	
Mortar, Type S, f'c	1,800 psi	X	

8.4.3 Structural Steel

The material and strengths for structural steel shall comply with the material and minimum strengths set forth in Table 8.7. Welding shall be provided in accordance with the latest

edition of the Structural Welding Code, AWS D1.1, published by the American Welding Society. Welding shall be performed by AWS certified welders.

Table 8.7 Design Criteria Summary – Structural Steel San Luis Obispo County

Design Parameter	Value	Criteria Intention: "Fixed" Criteria for D/B Team	Criteria Intention: "Baseline" Design Assumption
Wide-Flange Shapes	ASTM A992 Grade 50	X	
Round HSS	ASTM A500 Grade B with fy = 42 ksi	X	
Other Shapes and Plates	ASTM A36	X	
Connection Bolts	ASTM A325 N or SC	X	
Machine Bolts	ASTM A307 for Carbon Steel/ASTM A193 for Stainless Steel/ASTM A153 for Galvanized Steel	X	
Anchor Bolts/Anchor Rods	ASTM F 1554 Grade 36/Hot-Dip Galvanized	X	

Corrosion protection of steel shall be accomplished by protective coatings, material selection, or a combination thereof. The selected protection system for steel members shall meet the guidelines set forth in Table 8.8. Additionally, where differential materials come in contact or are to be connected together, they shall be isolated as needed from one another to prevent galvanic corrosion.

Table 8.8 Design Criteria Summary – Steel Protection Guidelines San Luis Obispo County

Location	Method of Protection or Material	Criteria Intention: "Fixed" Criteria for D/B Team	Criteria Intention: "Baseline" Design Assumption
Exterior Not Subject to Splash	Hot-Dip Galvanized and/or Protective Coating		X
Submerged	Type 316 Stainless Steel	X	
Interior Subject to Splash/Moisture	Type 316 Stainless Steel	X	
Interior Dry	Hot-Dip Galvanized Or Protective Coating		X
Within Chemical Containment	As Determined		X

Where stainless steel is to be welded, stainless steel shall be Type 304L for Type 304 stainless steel applications and Type 316L for Type 316 stainless steel applications.

8.4.4 Light Gauge Steel

Light gauge steel used for structural framing shall meet the material and minimum strength requirements set forth in Table 8.9. Use of light gauge steel shall be limited to the Administration and Maintenance Buildings.

Table 8.9 Design Criteria Summary – Light Gauge Steel San Luis Obispo County

Design Parameter	Value	Criteria Intention: "Fixed" Criteria for D/B Team	Criteria Intention: "Baseline" Design ASSUMPTION
Light Gauge Steel Shapes	ASTM A 653, Grade 33		X
Studs/Track Gauge	Minimum 20 Ga		X

8.4.5 Aluminum

Where aluminum is required for structural and miscellaneous framing, it shall be fabricated from alloy 6061-T6. Where aluminum is to be exposed to concrete, it shall be provided with a protective coating. Aluminum shall not be used in applications that are subject to submergence without review by the County.

8.4.6 Wood Framing

Wood (sawn lumber) used for structural framing shall meet the material and minimum strength requirements set forth in Table 8.10. Use of wood framing shall be limited to interior dry applications that will not expose the wood to a moist environment, such as the Headworks, or an exterior environment without protection or use of a durable species of lumber.

Table 8.10 Design Criteria Summary – Wood Framing San Luis Obispo County

Design Parameter		Value	Criteria Intention: "Fixed" Criteria for D/B Team	Criteria Intention: "Baseline" Design Assumption
Studs	2 by 3, 2 by 4	DF-L Number 2	X	
	2 by 6, 2 by 8	DF-L Number 2	X	
Roof Joists	2 by 6 through 2 by 14	DF-L Number 2	X	
Floor Joists and Planking	2 by 6 through 2 by 14	DF-L Number 2	X	

Table 8.10 Design Criteria Summary – Wood Framing San Luis Obispo County				
			Criteria Intention	
Design Parameter		Value	"Fixed" Criteria for D/B Team	"Baseline" Design Assumption
Headers, Beams, and Stringers	4 by 4 through 4 by 14	DF-L Number 1	X	
	6 by 6 through 6 by 14	DF-L Number 1 (WWPA 70-11)	X	
Posts and Timbers	6 by 6 and larger	DF-L Number 1	X	
Miscellaneous	All sizes	DF-L Number 2	X	

8.4.7 Miscellaneous Materials

Open web steel joists and joists girders shall be designed and detailed in accordance with the Steel Joist Institute Standard Specifications and Load Tables.

8.5 FOUNDATION SYSTEMS

The "baseline" design assumption for the foundation systems shall comply with the recommendations set forth in the Preliminary Geotechnical Report Los Osos Wastewater Project Los Osos Mortuary, Giacomazzi, and Branin Properties San Luis Obispo County, California, prepared by Fugro West, Inc., dated July 17, 2007. This report is provided in Appendix E.

The design of each structure shall be based upon a final geotechnical report that is prepared for the facility-specific structures. The final geotechnical report shall be prepared by a California registered geotechnical engineer and professional geologist. The final geotechnical report shall specifically address any potential liquefaction hazards, potential for lateral spreading, ground subsidence, ground lurching, and expansive soil conditions, and state recommended actions required to mitigate such hazards, should they exist. The recommendations of the geotechnical investigation performed for the final design shall be considered as superseding the criteria set forth herein, subject to the review and acceptance by the County.

8.6 ARCHITECTURAL DESIGN CRITERIA

The purpose of the architectural design criteria is to define the aesthetic and functional requirements for the project facilities.

8.6.1 Architectural Features

Table 8.11 provides an overview of numerous architectural design features and the systems that are to comprise those features for the planned facilities. In general, the design

and appearance of the structures shall reflect a rural agricultural theme in accordance with Condition of Approval Nos. 49 and 52 of the Coastal Development Permit CDP A-3-SLO-09-055/069 issued for the project. Preliminary renderings for the Administration Building, Maintenance Building, and Dewatering Building are presented on Figures 8.1 through 8.3, respectively.

Table 8.11 Design Criteria Summary – Architectural San Luis Obispo County

Design Parameter	Value	Criteria Intention: "Fixed" Criteria for D/B Team	Criteria Intention: "Baseline" Design Assumption
General Buildings & Structures			
Architectural Theme	Rural Agricultural, Agrarian.	X	
Color Palette	• Walls: Dark or neutral, non-reflective earth tone colors. • Roofing: Darker green, gray, slate blue, or brown. • Interiors: Neutral tans and white.	X	
Orientation on Site	South facing for solar access. In general, ridge lines shall trend to align east to west.	X	
Roof	Gable and Shed roof forms with standing seam metal roofing.	X	
Roof Pitch	3:12 minimum slope, 6:12 maximum slope.	X	
Exterior Building Finish	Corrugated and "R" metal wall panel siding, 22 to 26 gauge. Fiber Cement lap siding, 5-inch to 7-inch width. Exterior plaster with fine sand float finish. 8-inch x16-inch Split-face and/or Smooth-face CMU.	X	
Concrete Finish	Steel trowel finish with tooled control joints and edges. Sealed.	X	
Floor Finish	• Tile, Vinyl, and Concrete. • Steel trowel and dust-sealed at electrical rooms.	X	
Glazing	Aluminum frames with dual glazed windows.	X	
Roof Drainage	Aluminum gutters and downspouts to underground piping or splash blocks.	X	
Eaves and Soffits	Roof eaves shall extend a minimum of 2 feet and a maximum of 6 feet beyond exterior walls. All exterior eaves and soffits shall be finished with a minimum 26-gauge metal panels or exterior plaster.	X	
Roof Access	Inside access with fixed ladder to roof hatch. Fall protection system shall be provided as required.	X	
Personnel Doors	Flush insulated metal doors and welded steel frames. Level 3, physical performance level "A", with high-performance coatings.	X	

Table 8.11 Design Criteria Summary – Architectural San Luis Obispo County

Design Parameter	Value	Criteria Intention: "Fixed" Criteria for D/B Team	Criteria Intention: "Baseline" Design Assumption
Roll-up Doors	18- to 22-gauge steel curtain, behind jamb mounted, with chain hoist or motorized. With high-performance coating.	X	
Ceilings	T-bar acoustical ceiling tiles, (Tegular Cirrus or equal) in offices and lab. 5/8-inch gypsum board in reception, break room and hall. 5/8 inch moisture-resistant gypsum board in restrooms, janitor, utility. Open structure at process and equipment rooms	X	
Partitions	3-5/8-inch or 6-inch metal stud framed construction with 5/8-inch gypsum wallboard finish, except in process areas where electrical equipment is to be mounted or wash-down is anticipated. At these locations the partitions may be either CMU or concrete.	X	
Wall and Roof Insulation	Per Title 24 analysis or Batt insulation - R-13 in 3-5/8-inch walls, R-19 in 6-inch walls minimum. R-30 in roof.	X	
Fire Sprinklers	Where required to meet Building Code (limited access or hazardous materials) or NFPA 820.	X	
Skylights	Dual glazed and curb mounted. Design shall meet provisions of Cal OSHA Title 8 Guidelines and 2010 CBC.	X	
ADA Compliance	Offices and toilet rooms in public areas will be designed to be ADA compliant. The process facilities and other non-public areas will not be required to be compliant.	X	
Administrative Building			
Roof	Shed roof form with painted standing seam metal roofing.	X	
Exterior Building Finish	Fiber Cement lap siding, 5-inch to 7-inch width. Exterior plaster with fine sand float finish.	X	
Floor Finish	Tile, vinyl, and stained and sealed Concrete.	X	
Glazing	4-1/2 inches x 1-3/4 inches aluminum storefront frame and dual glazed doors and windows.	X	
Roof Drainage	Aluminum gutters and downspouts to underground piping or splash blocks.	X	
Eaves & Soffits	Roof eaves shall extend a minimum of 2 feet and a maximum of 6 feet beyond exterior walls. All exterior eaves and soffits exterior plaster.	X	
Roof Access	Not required.		X

Table 8.11 Design Criteria Summary – Architectural San Luis Obispo County

Design Parameter	Value	Criteria Intention: "Fixed" Criteria for D/B Team	Criteria Intention: "Baseline" Design Assumption
Exterior Personnel Doors	Exterior flush insulated metal doors and welded steel frames. Level 3, physical performance level "A", with high-performance coatings.	X	
Interior Personnel Doors	Interior door and window system shall be aluminum storefront system.	X	
Roll-up Doors	N/A		
Ceilings	T-bar acoustical ceiling tiles, (Tegular Cirrus or equal) in offices and lab. 5/8-inch gypsum board in reception, break room and hall. 5/8-inch moisture resistant gypsum board in restrooms, janitor, and utility.	X	
Partitions	3-5/8-inch or 6-inch metal stud framed construction with 5/8-inch gypsum wallboard finish.	X	
Wall Insulation	Per Title 24 energy analysis or Batt insulation - R-13 in 3-5/8-inch walls, R-19 in 6-inch walls minimum. R-30 in roof.	X	
Fire Sprinklers	Where required to meet Building Code (limited access or hazardous materials) or NFPA 820.	X	
Skylights	Dual glazed and curb mounted. Design shall meet provisions of Cal OSHA Title 8 Guidelines and 2010 CBC.	X	
ADA Compliance	As required by federal, state, and county building codes.	X	
Maintenance Building			
Roof	Gable and monitor roof form with standing seam metal roofing.	X	
Exterior Building Finish	Corrugated and metal wall panel siding, 22 to 26 gauge. 8-inch x 16-inch Split-face CMU wainscot 4 feet high.	X	
Floor Finish	Concrete with steel trowel and sealed finish in office, maintenance bay and open area. Tile in restroom.	X	
Glazing	4-1/2-inch x 1-3/4-inch aluminum storefront frame and dual glazed windows.	X	
Roof Drainage	Aluminum gutters and downspouts to underground piping or splash blocks.	X	
Eaves & Soffits	Roof eaves shall extend a minimum of 2 feet and a maximum of 6 feet beyond exterior walls. All exterior eaves and soffits shall be finished with a minimum 26-gauge metal panels	X	
Roof Access	Not required.		X

Table 8.11 Design Criteria Summary – Architectural San Luis Obispo County

Design Parameter	Value	Criteria Intention: "Fixed" Criteria for D/B Team	Criteria Intention: "Baseline" Design Assumption
Personnel Doors	Flush insulated metal doors and welded steel frames. Level 3, physical performance level "A", with high-performance coatings.	X	
Roll-up Doors	18- to 22-gauge steel curtain, behind jamb mounted, with chain hoist or motorized. With high-performance coating.	X	
Ceilings	Maintenance bay shall be finished with a minimum 26-gauge metal panels. 5/8-inch gypsum board in office. 5/8-inch moisture resistant gypsum board in restrooms and utility.	X	
Partitions	3-5/8-inch or 6-inch metal stud framed construction with 5/8-inch gypsum wallboard finish.	X	
Wall Insulation	Per Title 24 energy analysis or Batt insulation - R-13 in 3-5/8-inch walls, R-19 in 6-inch walls minimum. R-30 in roof.	X	
Fire Sprinklers	Where required to meet Building Code (limited access or hazardous materials) or NFPA 820.	X	
Skylights	Dual glazed and curb mounted. Design shall meet provisions of Cal OSHA Title 8 Guidelines and 2010 CBC.	X	
ADA Compliance	As required by federal, state, and County building codes.	X	
General Site			
Guardrail/Handrail	2-rail aluminum type with vertical pickets (no public access) with additional handrail at stairs.		X
Grating	Exterior grating and grating located over process basins and tanks will be aluminum pressure-locked grating designed for a minimum live load of 100 psf.		X
Site Lighting	See Coastal Development Permit, Special Condition 1g and Condition of Appoval No. 50.		

21-SanLuisObispo4-12F8.1-8930A10.ai

ADMINISTRATION BUILDING RENDERING

FIGURE 8.1

carollo
Engineers...Working Wonders With Water™

COUNTY OF SAN LUIS OBISPO

86-SanLuisObispo9-12F8.2-8930A10.ai

MAINTENANCE BUILDING RENDERING

FIGURE 8.2

carollo
Engineers...Working Wonders With Water™

COUNTY OF SAN LUIS OBISPO

86-SanLuisObispo9-12F8.3-8930A10.ai

DEWATERING
BUILDING RENDERING

FIGURE 8.3

carollo
Engineers...Working Wonders With Water™

COUNTY OF SAN LUIS OBISPO

8.6.2 Building Heights

In accordance with Condition of Approval No. 15 of the Coastal Development Permit CDP A-3-SLO-09-055/069, the building height as measured from the average native grade where the building is to be located shall not exceed the height limitations set forth in Table 8.12.

Table 8.12 Design Criteria Summary – Building Height Limits San Luis Obispo County

Building	Height Limit(1)	Criteria Intention	
		"Fixed" Criteria for D/B Team	"Baseline" Design Assumption
Administrative Building	28 ft	X	
Maintenance Building	35 ft	X	
Odor Control Facility	30 ft	X	
Solids Building	35 ft	X	
RAS WAS Station and Storage Tank	31 ft	X	
Secondary Clarifier (A)	25 ft	X	
Secondary Clarifier (B)	23 ft	X	
Electrical Building	35 ft	X	
Tertiary Treatment Building	26 ft	X	

Notes:
(1) Represents the maximum permissible building height as measured from the average native grade where the building is to be located.

8.6.3 Energy Efficiency

In addition to meeting the energy efficiency requirements outlined in Title 24 of the California Code, the facility shall be provided with the following energy efficient design measures:

- On-site lunch room equipped with refrigeration and food preparation appliances to reduce daily trips to and from the treatment facility.
- Use of double-paned windows at offices and where interior heating/air-conditioning will occur.
- Use of energy efficient interior lighting where applicable.

Roof alignments shall be designed to allow for a "due south orientation" to maximize solar power production efficiency for installation of future solar photovoltaic and/or solar water panels. Additionally, the roof pitch of the south-facing roof sections shall be as close to 20 degrees as possible.

8.6.4 Aesthetics

In general, the facilities are to blend into the natural surroundings and should be as inconspicuous as possible. Buildings shall be designed to look like barns and other rural-type structures to match the style of those found in the surrounding area.

Fully rendered architectural elevations showing all proposed structures shall be submitted to the Department of Planning for review and approval in consultation with the Environmental Coordinator. Elevations shall show exterior finish materials, colors, and height above the existing natural ground surface.

Colors shall minimize the structure massing of new development by reducing the contrast between the proposed development and the surrounding environment. Colors shall be compatible with the natural colors of the surrounding environment, including vegetation, rock outcrops, sand dunes, etc.

8.6.4.1 Landscaping

Landscaping shall meet specified requirements established in the Coastal Development Permit: Condition of Approval Nos. 49, 55, 91, and 102.

Appendix A

BIOTRAN CALCULATIONS

CAROLLO ENGINEERS, INC	
W.O./CLIENT:	8930A.10 / SAN LUIS OBISPO COUNTY
PROJECT:	LOS OSOS WATER RECYCLING FACILITY - DEVELOPMENT ABD DESIGN-BUILD SUPPORT
SUBJECT:	PROCESS ANALYSIS AND MASS BALANCE

Calc by	Date	Time	Chk by/Date	FileName:
CFP	05/03/2012	3:47 PM		Biotran Updated.xls

Biotran-1701

		Design Ditch w/local septage	Design Ditch w/local septage	Setup info	Basis
Annual Average Plant Flow, mgd	*	0.93	0.93		
Design (Max-Month) Flow, mgd		1.23	1.23		

NOTES regarding this application:

		PWWF All UIS	MM 1 SC OOS		
SUMMARY:					
FLOW RATES, mgd:					
- Raw WW Flow		1.2	1.2		
- Flow to Primaries		1.2	1.2		
- Influent Flow to Activated Sludge		1.4	1.4		
SECONDARY EFFLUENT QUALITY, mg/L:					
- BOD (est.), mg/L		2	2		
- TSS (nominal), mg/L		10	10		
- NH3-N, mg/L	[Note]	0.49	0.48		
- NO3-N, mg/L		1.9	1.9		
- NO2-N, mg/L		0.24	0.23		
- T.I.N., mg/L		2.6	2.6		
- T.N., mg/L		5.5	5.5		
AERATION BASINS					
- # of Basins		2	2		
- # in Service		2	2		
- Hydraulic Deten. Time, hr		37.8	37.9		
- Operating Last-Pass MLSS, mg/L		2,950	2,990		
- Design Temperature, deg C		20.3	20.3		
- Unaerated Volume Fraction		0.20	0.20		Selected
- Aerobic SRT, days		17.12	17.39		
-- Min. Aerobic SRT for Nitrification		6.71	6.71		
- Total SRT, days		**21.41**	**21.75**		
-- Recommended Min. Total SRT for Nitrification		8.39	8.39		
- F/M, lb BOD Appl./lb MLSS-day		0.09	0.09		
- Aer. BOD Loading, lb BOD/1000 cf-day		17	17		
- ML Recirculation Ratio		11.0	11.0		Selected
- Process Air (est.), scfm		--	--		
- Surface Aeration Peak Installed hp		172	172		
SECONDARY CLARIFIERS					
- # of Basins		2	2		
- # in Service		2	1		
- Sec. Clarifier SOR, gpd/sf		332	664		
- Sec. Clar. Solids Loading, lb/day-sf		18	35		
- Clarification Safety Factor (CSF)		2.9	1.44		
-- CSF Target		2.9	1.44		

CAROLLO ENGINEERS, INC					
W.O./CLIENT:	8930A.10 / SAN LUIS OBISPO COUNTY				
PROJECT:	LOS OSOS WATER RECYCLING FACILITY - DEVELOPMENT ABD DESIGN-BUILD SUPPORT				
SUBJECT:	PROCESS ANALYSIS AND MASS BALANCE				
Calc by	Date Time	Chk by/Date	FileName:		
CFP	05/03/2012 3:47 PM		Biotran Updated.xls		

Biotran-1701		Design Ditch w/local septage	Design Ditch w/local septage	Setup info	Basis
Annual Average Plant Flow, mgd	*	0.93	0.93		
Design (Max-Month) Flow, mgd		1.23	1.23		

DETAILED CALCULATIONS:

RAW WASTEWATER (excluding Recycles)					
o Plant Flow Rate, mgd		1.2	1.2		
o Flow Characteristic Ratios					
- Max Month/Annual Avg flow ratio	*	1.32	1.32		Default
- Peak-hour Wet-W Flow/Annual Avg	*	3.3	1.7		Default
- Typical Diurnal 4-hr Peak/Avg Ratio	*	1.92	1.50		Default
o Wastewater Characteristics					
- BOD, mg/L, Annual Average	*	**395**	**395**		Default
-- Mass Load (lb/d) Peaking Factor	*	1.25	1.25		
-- Effective BOD, mg/L		374	374		
"Effective" concentrations correspond to Peak Mass Loads with the flow rate used in the calculation					
- TSS, mg/L, Annual Average	*	**356**	**356**		Default
-- Mass Load (lb/d) Peaking Factor	*	1.25	1.25		
-- Effective TSS, mg/L		337	337		
- Fpv, VSS fraction	*	0.83	0.83		Default
-- Effective VSS, mg/L		280	280		
- NH3-N, mg/L, Annual Average	*	**41.6**	**41.6**		Default
-- Mass Load (lb/d) Peaking Factor	*	1.25	1.25		
-- Effective NH3-N, mg/L		39.4	39.4		
Organic-N, mg/L, Annual Average	*	21.4	21.4		Default
-- Mass Load (lb/d) Peaking Factor	*	1.25	1.25		
-- Effective Org-N, mg/L		20.3	20.3		
- NO3-N + NO2-N, mg/L, Annual Average	*	0	0		Default
- Alkalinity, mg/L, Annual Average	*	250	250		Default
- Filterable BOD					
-- fraction, **Fbf**	*	0.43	0.43		Default
-- mg/L		161	161		
- **Fvu**, Fraction VSS that is Unbiodeg [Comment]	*	0.280	0.280		Estimated
- Total Phosphorus, mg/L, Annual Average	*	13.1	13.1		Default
-- Mass Load (lb/d) Peaking Factor	*	1.25	1.25		
-- Effective Total-P, mg/L		12.4	12.4		
-- Fraction filterable ("soluble")	*	0.38	0.38		Default
-- Filterable P, mg/L		4.73	4.73		
o Design Temperature, deg. C					
- Minimum (Winter)	*	20.3	20.3		Default
- Maximum (Summer)	*	27.7	27.7		Default
- Design	*	20.3	20.3		Winter
- At Diurnal Peak Flow		1,453,241	1,136,363		
RECYCLE TO ACTIVATED SLUDGE					
o Flow Rate, mgd					
- Filter Backwash	*	0.065	0.065		
- Beltpress Filtrate	*	0.021	0.021		

CAROLLO ENGINEERS, INC

W.O./CLIENT:	8930A.10 / SAN LUIS OBISPO COUNTY
PROJECT:	LOS OSOS WATER RECYCLING FACILITY - DEVELOPMENT ABD DESIGN-BUILD SUPPORT
SUBJECT:	PROCESS ANALYSIS AND MASS BALANCE

Calc by	Date	Time	Chk by/Date	FileName:
CFP	05/03/2012	3:47 PM		Biotran Updated.xls

Biotran-1701

		Design Ditch w/local septage	Design Ditch w/local septage	Setup info	Basis
Annual Average Plant Flow, mgd	*	0.93	0.93		
Design (Max-Month) Flow, mgd		1.23	1.23		
- WAS storage decant	*	0.052	0.048		
- Spray Water to Basins	*	0.003	0.003		Default
- Total		0.140	0.136		
o Wastewater Characteristics, mg/L					
- Total Recycle					
-- BOD		35	35		
-- TSS		441	449		
-- VSS		308	313		
-- NH3-N		1	1		
-- Organic-N		25	25		
-- NO3-N + NO2-N		3	3		
-- Alkalinity		112	112		
-- Filterable ("soluble") BOD		0.5	0.6		
-- Total soluble Organic N		2.6	2.6		
-- Fpv, VSS fraction		0.70	0.70		
- Fvu, Fraction VSS that is Unbiodeg	*	0.700	0.700		Default
ACTIVATED SLUDGE PROCESS					
o Flow Rate, mgd					
- Main-Stream Influent		1.23	1.23		
- Recycle directly to AS		0.14	0.14		
- Total Main Influent to Activated Sludge		1.37	1.36		
o Influent Characteristics, mg/L					
- Total BOD		339	340		
- TSS		348	348		
- VSS		283	283		
- NH3-N		35	36		
- Organic-N		21	21		
- NO3-N + NO2-N		0	0		
- Alkalinity		236	236		
- Filterable ("soluble") BOD		144	145		
- Fpv, VSS fraction		0.81	0.81		
- AB Influent D.O. Concentration, mg/L		0.1	0.1		
o Basin dimensions					
- Main Basins				MBR	
-- No. of Basins	*	2	2	0	
-- Number of Units in Service	*	2	2	0	
-- Length, ft (inside)	*	200	200	0	
-- Width, ft (inside)	*	60	60	0	
-- Side Water Depth, ft	*	12	12	0	
.. Recomm inside Wall height, incl. Freeboard, ft		15	15	3	
-- Liquid Volume per Basin, mil gal		1.08	1.08	0.00	
- Supplemental Basins or Sections					
-- Identification	*			Membrn Zn	
-- No. of Basins	*	0	0	0	
-- Number of Units in Service	*	0	0	0	
-- Length, ft (inside)	*	200	200	0	
-- Width, ft (inside)	*	100	100	0	

CAROLLO ENGINEERS, INC

W.O./CLIENT:	8930A.10 / SAN LUIS OBISPO COUNTY
PROJECT:	LOS OSOS WATER RECYCLING FACILITY - DEVELOPMENT ABD DESIGN-BUILD SUPPORT
SUBJECT:	PROCESS ANALYSIS AND MASS BALANCE

Calc by	Date	Time	Chk by/Date	FileName:
CFP	05/03/2012	3:47 PM		Biotran Updated.xls

Biotran-1701

		Design Ditch w/local septage	Design Ditch w/local septage	Setup info	Basis
Annual Average Plant Flow, mgd	*	0.93	0.93		
Design (Max-Month) Flow, mgd		1.23	1.23		
-- Side Water Depth, ft	*	17	17	0	
-- Volume per Basin, mil gal		2.54	2.54	0.00	
o Total Volume of Basins, mil gal					
- Total Basin volume in service		2.15	2.15		
-- Reduction for MBR cassettes		0.00	0.00		
- Biological Reaction Volume		2.15	2.15		
o Aerated Zone BOD Loading, lb/1,000 cf-day		16.5	16.5		
o Hydraulic Detention Time, hr		37.79	37.91		
o Selected Operating L-P MLSS, mg/L		2,954	2,988		
PROCESS LAYOUT					
o Zone Sizes (Fraction of Total Volume)					Selected
- Zone 1	*	0.100	0.100	0.000	
- Zone 2	*	0.100	0.100	0.000	
- Zone 3	*	0.000	0.000	0.000	
- Zone 4	*	0.000	0.000	0.000	
- Zone 5	*	0.000	0.000	0.000	
- Zone 6	*	0.000	0.000	0.000	
- Zone 7 (by difference)		0.800	0.800	0.000	
-- Total		1.000	1.000	0.000	
o DO in each Zone (Unaerated, Set = 0), mg/L					
- Zone 1	*	0.0	0.0	0.0	
- Zone 2	*	0.0	0.0	2.0	
- Zone 3	*	2.0	2.0	2.0	
- Zone 4	*	2.0	2.0	2.0	
- Zone 5	*	2.0	2.0	2.0	
- Zone 6	*	2.0	2.0	2.0	
- Zone 7	*	0.4	0.4	***0.0***	
o Enhanced Simultaneous Nitrif-Denitrification					
- Apply enhanced SND? Y=1, N=0	*	0	0		
o Aerated/Unaerated Fractions					
- Total Unaerated Volume Fraction		0.20	0.20		
-- Total Unaerated Volume, mil gal		0.43	0.43		
- Total Aerated Volume Fraction		0.80	0.80		
-- Total Aerated Volume, mil gal		1.72	1.72		
- Total Aerated Mass Fraction		0.80	0.80		
o Plant Influent Flow Routing					
- Fraction to Zone 1	*	1.00	1.00		Default
- Fraction to Zone 2	*	0.00	0.00		Default
- Fraction to Zone 3	*	0.00	0.00		Default
- Fraction to Zone 4	*	0.00	0.00		Default
- Fraction to Zone 5	*	0.00	0.00		Default
- Remainder to Zone 6		0.00	0.00		
o Return Sludge Routing					
- Fraction to Zone 1	*	1.00	1.00		Default
- Fraction to Zone 2	*	0.00	0.00		Default
- Remainder to Zone 3		0.00	0.00		
o Sludge Wasting Method					

CAROLLO ENGINEERS, INC

W.O./CLIENT:	8930A.10 / SAN LUIS OBISPO COUNTY
PROJECT:	LOS OSOS WATER RECYCLING FACILITY - DEVELOPMENT ABD DESIGN-BUILD SUPPORT
SUBJECT:	PROCESS ANALYSIS AND MASS BALANCE

Calc by	Date	Time	Chk by/Date	FileName:
CFP	05/03/2012	3:47 PM		Biotran Updated.xls

Biotran-1701

		Design Ditch w/local septage	Design Ditch w/local septage	Setup info	Basis
Annual Average Plant Flow, mgd	*	0.93	0.93		
Design (Max-Month) Flow, mgd		1.23	1.23		
- Wasting from RAS (1) or ML (0)	*	1	1	0	Default
-- If ML, Waste taken from Zone # (1, 2, - - 7)	*	(RAS)	(RAS)	7	Default
o Mixed-Liquor Recirculation (MLR#1) Routing					
- MLR Taken from Zone (0, 1, 2, - - 7); 0=NA	*	7	7		Default
- MLR Returned to Zone (0, 1, 2, - - 7); 0=NA	*	1	1		Default
- MLR Flow, mgd		15.00	15.00		
- MLR Ratio		10.96	11.00		
o Second Internal Recycle Stream (MLR#2)					
Zones 1 and 4-7 can accept an external stream					
- Flow Taken from Zone (0, 1, 2, - - 7); 0=NA	*	0	0		Default
- Flow Sent to Zone (0, 1, 4, 5, 6, 7); 0 = NA	*	0	0		Default
- Flow Rate, mgd	*	0.00	0.00		
EXTERNAL INPUT STREAM					
o Source/Origin	*	External	External		
o Routing of External Input					
- Flow Sent to Zone (0, 1, 4, 5, 6, 7); 0 = NA	*	0	0		
o Flow Rates, mgd					
- External Input Stream	*	0.00	0.00		
- Main Plant Influent		1.37	1.36		
- Total Flow leaving AS Process		1.37	1.36		
o Conventional Characteristics					
- BOD	*	230	230		
- TSS	*	250	250		
- VSS		208	208		
- NH3-N	*	23	23		Default
- Organic-N	*	14	14		Default
- NO3-N + NO2-N	*	0	0		Default
- Alkalinity, mg/L as CaCO3	*	250	250		Default
- Filterable ("soluble") BOD	*	87	87		Default
- Fpv, VSS fraction	*	0.83	0.83		Default
- Fvu, Fraction VSS that is Unbiodeg	*	0.350	0.350		Default
- D.O. Concentration, mg/L	*	0.0	0.0		Default
- Nitrite (NO2-N) included in NO3/2 above, mg/l	*	0.0	0.0		
- Total VFAs expressed as acetate, mg/L	*	0.0	0.0		
LOADING CRITERIA					
o BOD Applied, lb/d					
- BOD in Influent		3,870	3,870		
- BOD in External Stream		0	0		
- (-) WAS BOD Recycled		65	64		
- Net BOD Load		3,805	3,805		
o MLSS under aeration, lb		42,452	42,944		
- F/M, lb BOD Appl./lb MLSS-day		0.09	0.09		
o Organic Loading, Based on Aerated Zone					
- Aerated Volume in Service, 1,000 cf		230	230		
- Aer. BOD Loading, lb BOD/1000 cf-day		16.5	16.5		
o Unaerated Zone					

CAROLLO ENGINEERS, INC

W.O./CLIENT:	8930A.10 / SAN LUIS OBISPO COUNTY
PROJECT:	LOS OSOS WATER RECYCLING FACILITY - DEVELOPMENT ABD DESIGN-BUILD SUPPORT
SUBJECT:	PROCESS ANALYSIS AND MASS BALANCE

Calc by	Date	Time	Chk by/Date	FileName:
CFP	05/03/2012	3:47 PM		Biotran Updated.xls

Biotran-1701

		Design Ditch w/local septage	Design Ditch w/local septage	Setup info	Basis
Annual Average Plant Flow, mgd	*	0.93	0.93		
Design (Max-Month) Flow, mgd		1.23	1.23		
- Actual HRT (Throughflow), hr		0.58	0.58		
- Mixing Power, total					
-- Total BHP, all Unaerated Zones	*	15.1	15.1		
-- Mixing, hp/mil gal		35	35		
ACTIVATED SLUDGE - ZONE 1		Un-Aer	Un-Aer		
o Zone Volume, mil gal	1	0.215	0.215		
o Flows Entering, mgd	1				
- Plant Influent Flow	1	1.37	1.36		
- RAS Stream	1	1.56	1.40		
- ML Recirculation (MLR#1)	1	15.00	15.00		
- External or Second Recycle Stream (MLR#2)	1	0.00	0.00		
- Total Flow to this Zone	1	17.93	17.76		
o ML Flow removed from this Zone, mgd	1				
- ML Circulated to Other Zones	1	0.00	0.00		
- ML Wasted from this Zone	1	0.00	0.00		
- Other ML Flow removed from this Zone	*	0.00	0.00		
- Net ML Flow to Next Zone, mgd	1	17.93	17.76		
o HRT in this Zone	1				
- Hydraulic Detention time, Actual, hr	1	0.29	0.29		
o Effluent from this Zone	1				
-- MLSS, mg/L	1	2,965	3,000		
-- NH3-N, mg/L	1	3.25	3.27		
-- NO3-N, mg/L	1	0.37	0.37		
-- NO2-N, mg/L	1	0.04	0.04		
-- D.O., mg/L	1	0.00	0.00		
o Biological Growth Summary	1				
- Increase in VSS, lb/d	1	129	130		
- Increase in ISS, lb/d	1	21	21		
ACTIVATED SLUDGE - ZONE 2		Un-Aer	Un-Aer		
o Zone Volume, mil gal	2	0.215	0.215		
o Flows Entering, mgd	2				
- Throughflow	2	17.93	17.76		
- Plant Influent to this Zone	2	0.00	0.00		
- RAS Stream	2	0.00	0.00		
- ML Recirculation (MLR#1)	2	0.00	0.00		
- Total Flow to this Zone	2	17.93	17.76		
o ML Flow removed from this Zone, mgd	2				
- ML Recirculated to Other Zones	2	0.00	0.00		
- ML Wasted from this Zone	2	0.00	0.00		
- Other ML Flow removed from this Zone	*	0.00	0.00		
- Net ML Flow to Next Zone, mgd	2	17.93	17.76		
o HRT in this Zone	2				
- Hydraulic Detention time, Actual, hr	2	0.29	0.29		
o Effluent from this Zone	2				
-- MLSS, mg/L	2	2,963	2,997		

		Design Ditch w/local septage	Design Ditch w/local septage	Setup info	Basis
Annual Average Plant Flow, mgd	*	0.93	0.93		
Design (Max-Month) Flow, mgd		1.23	1.23		
-- NH3-N, mg/L	2	3.55	3.57		
-- NO3-N, mg/L	2	0.02	0.02		
-- NO2-N, mg/L	2	0.00	0.00		
-- D.O., mg/L	2	0.00	0.00		
o Biological Growth Summary	2				
- Increase in VSS, lb/d	2	-361	-364		
- Increase in ISS, lb/d	2	-10	-10		
ACTIVATED SLUDGE - ZONE 7		Aerated	Aerated		
o Zone Volume, mil gal	7	1.723	1.723		
o Flows Entering, mgd	7				
- Throughflow	7	17.93	17.76		
- (-) Removed as MBR Filtrate [Note]	7	0.00	0.00		
- ML Recirculation (MLR#1)	7	0.00	0.00		
- External or Second Recycle Stream (MLR#2)	7	0.00	0.00		
- Total Flow to this Zone	7	17.93	17.76		
o ML Flow removed from this Zone (excl.MBR Filtr)	7				
- ML Recirculated to Other Zones	7	15.00	15.00		
- ML Wasted from this Zone	7	0.00	0.00		
- Other ML Flow removed from this Zone	*	0.00	0.00		
- Net Flow to Next Zone, mgd	7	2.93	2.76		
o HRT in this Zone	7				
- Hydraulic Detention time, Actual, hr	7	2.31	2.33		
o Effluent from this Zone	7				
-- MLSS, mg/L	7	2,954	2,988		
-- NH3-N, mg/L	7	0.49	0.48		
-- NO3-N, mg/L	7	1.87	1.89		
-- NO2-N, mg/L	7	0.24	0.23		
-- D.O., mg/L	7	0.35	0.35		
o Biological Growth Summary	7				
- Increase in VSS, lb/d	7	-1,468	-1,472		
- Increase in ISS, lb/d	7	69	69		
WAS SOLIDS PRODUCTION					
o Biological P-Removal					
- Include Bio-P Removal in Calc? (Y=1, N=0)	*	0	0		
o Solids Production, TSS, lb/d					
- TSS Entering in Feed, lb/d		4,553	4,547		
- TSS Entering in External Input, lb/d		0	0		
- VSS Change in A.B. Zones		-1,701	-1,706		
- ISS Change in A.B. Zones		80	79		
- ISS due to Bio-P (Est.), lb/d		0	0		
- Unbiodeg VSS due to Bio-P (Est.), lb/d		0	0		
- Total Solids Production, lb/d		**2,932**	**2,920**		
MLSS CHARACTERISTICS					
o Mixed Liquor Components, mg TSS/L (from Final Zone)					
- Solids, mg TSS/L					

CAROLLO ENGINEERS, INC

W.O./CLIENT:	8930A.10 / SAN LUIS OBISPO COUNTY
PROJECT:	LOS OSOS WATER RECYCLING FACILITY - DEVELOPMENT ABD DESIGN-BUILD SUPPORT
SUBJECT:	PROCESS ANALYSIS AND MASS BALANCE

Calc by	Date	Time	Chk by/Date	FileName:
CFP	05/03/2012	3:47 PM		Biotran Updated.xls

Biotran-1701

		Design Ditch w/local septage	Design Ditch w/local septage	Setup info	Basis
Annual Average Plant Flow, mgd	*	0.93	0.93		
Design (Max-Month) Flow, mgd		1.23	1.23		
-- Slowly Biodegradable		23	23		
-- Active Biomass		580	582		
-- Endogenous Biomass		449	457		
-- Ammonia Oxidizers		16	16		
-- Nitrite Oxidizers		9	9		
-- Unbiodegradable VSS (Influent + Bio-P)		1,062	1,076		
-- Unbiodegradable VSS from External input		0	0		
-- Inorganic SS (influent + Biogrowth)		829	840		
-- Inorganic SS in External input		0	0		
-- Inorganic SS due to Bio-P (est.)		0	0		
-- Total Last-Pass MLSS		2,968	3,002		
-- Total Organic-N		156.9	158.4		
-- Alkalinity, mg/L as CaCO3		117	117		
o Org N fraction of MLVSS (NinVSS)		0.072	0.072		
o MLVSS Fraction		0.72	0.72		
o BOD of AS Solids					
- BOD/TSS ratio		0.15	0.15		
o Biodegradability of AS VSS					
SOLIDS RETENTION TIME, SRT					
o Total Solids Wasted, lb/d		2,932	2,920		
- Recycled WAS Solids, lb/d		452	451		
- Net lb Solids Yield/day		2,480	2,469		
o Total BOD Load, lb/d		3,870	3,870		
- Recycled BOD, lb/d		65	64		
- Net BOD Load, lb/d		3,805	3,805		
o Solids Production					
- lb Dry SS/lb BOD Applied		0.652	0.649		
o Total Mass TSS in System, lb		53,103	53,718		
- **Total SRT (Rs), days**		**21.41**	**21.75**		
o Total Mass TSS in Aerated Zones, lb		42,452	42,944		
- Nominal Aerated Mass Fraction		0.799	0.799		
- **Nominal Aerobic SRT, days**		**17.12**	**17.39**		
o Mass Fraction in Each Zone					
- Zone 1		0.100	0.100		
- Zone 2		0.100	0.100		
- Zone 3		0.000	0.000		
- Zone 4		0.000	0.000		
- Zone 5		0.000	0.000		
- Zone 6		0.000	0.000		
- Zone 7		0.799	0.799		
		1.000	1.000		
o Min. Aer. SRT recommended for nitrification, days		6.7	6.7		
- Washout SRT(total)					
-- Rwashout = 1/(Ua*DOsw - ba)		3.24	3.24		
- Recommended Operating SRT					
-- Max recomm. change in NH3, mg/L,	*	0.10	0.10		

		Design Ditch w/local septage	Design Ditch w/local septage	Setup info	Basis
Annual Average Plant Flow, mgd	*	0.93	0.93		
Design (Max-Month) Flow, mgd		1.23	1.23		
for *10% change in SRT*					
-- Max slope criterion, as dNH3/dSRT, mg/L-d		0.12	0.12		
-- Recomm. Min. Operating SRT(total)		8.4	8.4		
-- Recomm. Min. Op. SRT(Nominal aerobic)		6.7	6.7		
-- Nitrification Safety Factor		2.59	2.59		
AERATION REQUIREMENTS					
o Oxygen Required, lb/d					
- Net Oxygen Demand in Zone 7		5,572	5,580		
- (-) Oxygen provided by MBR Scouring		0	0		
- Total Oxygen required lb/d		**5,572**	**5,580**		
o Diffuser Analysis					
Note:					
All values of air and blower requirements given below are preliminary estimates, to be refined during detailed design					
o Oxygen Transfer Efficiency		[SeeNote]	[SeeNote]		
- Diffuser Type		Surface	Surface		
- Aeration Basin D.O. (Avg), mg/L		**3.0**	**3.0**		
- Design Water Temperature, C		27.7	27.7		Summer
- Clean Water SOTE	*	3.2	3.2		Mfr. lit.
- Site Conditions Adjustment Factor					
F = Actual / Standard OTE					
-- Alpha factor, including fouling		0.90	0.90		Estimate
-- Theta factor	*	1.024	1.024		Default
-- Temp. correction, Tau		0.87	0.87		
-- Elevation above MSL, ft	*	100	100		Site
-- ..Pressure correction, Omega		1.00	1.00		
-- Beta factor	*	0.99	0.99		Default
-- Equilibrium C*20		9.07	9.07		
..Depth Adjustment Factor	*	0	0		Default
- F = Alpha x [Theta ^(T-20)]		0.56	0.56		
x (Tau Beta Omega C*20 - C)/C*20					
- Oxygen Transfer Efficiency		1.80	1.80		
OTE = F x SOTE		lb/hp-hr	lb/hp-hr		
Preliminary Estimate					
o Surface Aerators		Installed	Installed		
- Oxygen to be transferred, lb/hr		232	233		
- Aerator hp required		129	129		
[Ox. Requ.d/Eff.]					
- Peaking factor	*	1.33	1.33		
- Aerator hp Installed		172	172		
o Wire power required					
- Wire power required, hp					
-- Daily Average		129	129		
-- Firm Installed		172	172		

CAROLLO ENGINEERS, INC

W.O./CLIENT:	8930A.10 / SAN LUIS OBISPO COUNTY
PROJECT:	LOS OSOS WATER RECYCLING FACILITY - DEVELOPMENT ABD DESIGN-BUILD SUPPORT
SUBJECT:	PROCESS ANALYSIS AND MASS BALANCE

Calc by	Date	Time	Chk by/Date	FileName:
CFP	05/03/2012	3:47 PM		Biotran Updated.xls

Biotran-1701

		Design Ditch w/local septage	Design Ditch w/local septage	Setup info	Basis
Annual Average Plant Flow, mgd	*	0.93	0.93		
Design (Max-Month) Flow, mgd		1.23	1.23		
SECONDARY SEDIMENTATION BASINS					
o Flow Rates, mgd					
- AS Influent, Q		1.37	1.36		
- Net Sed. Basin Inflow (excl. RAS), Qci		1.37	1.36		
- Return Sludge Flow, Qr (not including waste sludge flow)		1.56	1.40		
- Total Sed Basin Inflow		2.93	2.76		
- Total Sed. Basin Underflow		1.62	1.46		
- Net Sec. Effluent, Qe		1.30	1.30		
o Basin dimensions					
- Group 1	*				
-- No. of Basins	*	2	2		
-- Number of Units in Service	*	2	1		
-- Diameter, ft (inside)	*	50	50		
-- Side Water Depth, ft	*	14.0	14.0		
-- Surface Area per Basin, sf		1,963	1,963		
-- Volume per Basin, cf		27,489	27,489		
o Flow Split					
- Fraction of ML Flow to Group 1:					
-- Fraction based on Surface Area		1.00	1.00		
-- Fraction selected	*	1.00	1.00		
- Effective (Flow-weighted) SWD, ft		14.00	14.00		
o Surface Overflow Rate					
- Group 1					
-- Surface Area in service, sf		3,927	1,963		
-- Surface Overflow Rate, gpd/sf		332	664		
o Volume in service, mil gal					
- Group 1		0.41	0.21		
o Hydraulic Detention Time, hr (based on Q)					
- Group 1		7.2	3.6		
o Weir Loading					
- Group 1					
-- Actual weir length per unit, ft	*	148	242		Default
-- Weir loading, gpd/ft		4,417	5,392		
o Sludge Settling Characteristics					
ISV = V_0 exp(- MLSS/X_M), ft/h					
- Design Settling Constants					
-- V_0, ft/hr	*	**19.5**	**19.5**		
-- X_M, mg/L	*	**2,300**	**2,300**		
o Target Settling Values					
- Effluent rise rate (SOR), ft/hr					
-- Group 1		1.85	3.70		
-- Average		1.85	3.70		
- Clarification Safety Factor, CSF	*	2.92	1.44		Default
- Required Initial Settling Velocity, ISV, ft/hr		5.4	5.3		
- Preferred Max. Last-Pass MLSS, mg/L		2,954	2,988		
o Selected Settling Values					

		Design Ditch w/local septage	Design Ditch w/local septage	Setup info	Basis
Annual Average Plant Flow, mgd	*	0.93	0.93		
Design (Max-Month) Flow, mgd		1.23	1.23		
- Operating L-P MLSS conc, mg/L		2,954	2,988		
- Operating ISV, ft/h		5.40	5.32		
- Operating CSF					
-- Group 1		2.92	1.44		
-- Average		2.92	1.44		
SLUDGE RETURN AND WASTAGE					
o Wasting Method (see Process Layout)					
- Waste Flow from RAS, Qw		0.064	0.060		
- Waste Flow from MLSS, Zone 7, Qmw		0.00	0.00		
o Return Sludge					
- Qr/Q, fraction (based on Qr to Aer Basin)	*	1.14	1.02		
-- [Ratio based on Clarifier Underflow/Q]		1.19	1.07		
- RAS flow to Aer Basin, Qr, mgd Average		1.56	1.40		
- RAS concentration, mg/L		5,317	5,657		
o Sludge Wastage					
- Total Solids Wasted, lb/d		2,932	2,920		
- Adjustment for ESS:					
-- Solids in Effluent, lb/d		109	109		
-- Solids in WAS, lb/d		2,824	2,811		
- Wasting from -		RAS	RAS		
- WAS Concentration, mg/L		5,317	5,657		
- Organic N, lb/d		148	147		
- Flow Rate, mgd Average		0.064	0.060		
o WAS Characteristics, mg/L					
- BOD		794	837		
- TSS		5,317	5,657		
- VSS		3,832	4,075		
- NH3-N		0.5	0.5		
- Organic-N		279.2	296.3		
- NO3-N + NO2-N		1.9	1.9		
- Alkalinity		117	117		
- Filterable ("soluble") BOD		1.0	1.0		
- Total soluble Organic N		2.4	2.4		
o Recommended Installed Capacity					
- Min. Underflow requ'd at peak flow, $Q_{Rmin,p}$		1.70	0.85		
- Thickening Safety Factor	*	1.10	1.10		
- Recomm. Underflow Capacity, mgd		1.87	0.94		
- Installed Return Sludge Pumps, mgd		1.81	0.88		
-- gpm		1,250	610		
- WAS Pumps					
-- Wasting operation, hr/day	*	24	24		
-- Pump Capacity (2 x Q_{WAS}), gpm		90	90		
-- WAS Solids Peak Handling Capacity, lb/hr		240	240		
SECONDARY EFFLUENT					
o Flow Rate					
- Net Secondary Effluent, mgd		1.30	1.30		

CAROLLO ENGINEERS, INC

W.O./CLIENT:	8930A.10 / SAN LUIS OBISPO COUNTY
PROJECT:	LOS OSOS WATER RECYCLING FACILITY - DEVELOPMENT ABD DESIGN-BUILD SUPPORT
SUBJECT:	PROCESS ANALYSIS AND MASS BALANCE

Calc by	Date	Time	Chk by/Date	FileName:
CFP	05/03/2012	3:47 PM		Biotran Updated.xls

Biotran-1701

		Design Ditch w/local septage	Design Ditch w/local septage	Setup info	Basis
Annual Average Plant Flow, mgd	*	0.93	0.93		
Design (Max-Month) Flow, mgd		1.23	1.23		
o Secondary Effluent Quality					
- BOD, mg/L		2	2		Estimate
- TSS (nominal), mg/L	*	10	10		Default
- VSS, mg/L		7.2	7.2		
- NH3-N, mg/L		0.5	0.5		
- Total Organic N, mg/L		2.9	2.9		
- NO3-N, mg/L		1.9	1.9		
- NO2-N, mg/L		0.2	0.2		
- Alkalinity, mg/L		117	117		
- Soluble Organic N, mg/L		2.4	2.4		
- T.I.N., mg/L		2.6	2.6		
- Total N, mg/L		5.5	5.5		
TERTIARY FILTRATION		In Service	In Service		
o Tertiary Filtration in Service? (Y=1, N=0)	*	1	1		
o Influent					
- Flow, mgd					
-- Total		1.3	1.3		
- BOD, total, mg/L		2.0	2.0		
- SS, total, mg/L		10.0	10.0		
o Filter Area					
- Surface Area per Filter, sf	*	780	780		
- Backwash - Continuous (0) or Intermittent (1)?	*	0	0		
- Standby Units Provided	*	1	1		
- Number of Filters					
-- Existing	*	2	2		
-- New	*	0	0		
-- Total		2	2		
- Number of Units in Service		1	1		
o Filter Loading					
- Equalization provided? (Y=1, N=0)	*	1	1		
- Peaking factor	*	1.10	1.10		Default
- Surface Area in Service, sf		780	780		
- Liquid Loading Rate, gpm/sf					
-- At Daily Average Flow, gpm/sf		1.2	1.2		
-- At Peak Flow, gpm/sf		1.3	1.3		
o Removal					
- SS Removal, %	*	60	60		Default
- SS removed, lb/d		65	65		
- BOD removed, lb/d		7	7		
o Backwash Flow					
- Percent of Flow, %	*	5	5		
- Backwash Flow, mgd		0.07	0.07		
o Backwash Characteristics, mg/L					
- BOD		13	13		
- TSS		120	120		
- VSS		86	86		
- NH3-N		0.5	0.5		

CAROLLO ENGINEERS, INC

W.O./CLIENT:	8930A.10 / SAN LUIS OBISPO COUNTY
PROJECT:	LOS OSOS WATER RECYCLING FACILITY - DEVELOPMENT ABD DESIGN-BUILD SUPPORT
SUBJECT:	PROCESS ANALYSIS AND MASS BALANCE

Calc by	Date	Time	Chk by/Date	FileName:
CFP	05/03/2012	3:47 PM		Biotran Updated.xls

Biotran-1701

		Design Ditch w/local septage	Design Ditch w/local septage	Setup info	Basis
Annual Average Plant Flow, mgd	*	0.93	0.93		
Design (Max-Month) Flow, mgd		1.23	1.23		
- Organic-N		9	9		
- NO3-N + NO2-N		2.1	2.1		
- Alkalinity		117	117		
o Net Flow to Disinfection, mgd					
- Undisinfected Plant Water Used	*	0.00	0.00		
- To Disinfection		1.24	1.24		
o Tertiary Effluent Quality, mg/L					
- BOD		1.4	1.4		
- SS		4.0	4.0		
- VSS, mg/L		2.9	2.9		
- NH3-N, mg/L		0.5	0.5		
- Total Organic N, mg/L		2.6	2.6		
- NO3-N + NO2-N, mg/L		2.1	2.1		
- Alkalinity, mg/L		117	117		
- Filterable ("soluble") BOD		1.0	1.0		
- Soluble Organic N, mg/L		2.4	2.4		
- T.I.N., mg/L		2.6	2.6		
- Total N, mg/L		5.2	5.2		
FINAL EFFLUENT					
o Flow Rate, mgd					
- Plant Water used	*	0.02	0.02		
- Final Effluent Flow		-0.02	-0.02		
RESIDUALS MANAGEMENT					
SOLIDS GENERATED					
o Total Waste Activated Sludge					
- Flow, mgd		0.064	0.060		
- Solids, lb/d		2,824	2,811		
- Concentration, %		0.53	0.57		
- VSS, %		72	72		
- Volatile solids, lb/d		2,035	2,025		
- Organic N, lb/d		148	147		
- Recomm Installed WAS Flow Capacity, gpm		90	90		
- Recomm Installed WAS Solids Capacity, lb/hr		240	240		
SLUDGE ROUTING					
o Waste Activated Sludge					
- (a) Thickening		None	None		
- (b) Then routed to - -		Aero Diges	Aero Diges		
o Service	[Note]	NA	NA		
AEROBIC DIGESTER		In Service	In Service		
o Feed		WAS	WAS		
- Flow, mgd		0.064	0.060		
- Solids, lb/d		2,824	2,811		
- Volatile Solids, lb/d		2,035	2,025		
- Organic N, total, lb/d		148	147		

CAROLLO ENGINEERS, INC

W.O./CLIENT:	8930A.10 / SAN LUIS OBISPO COUNTY
PROJECT:	LOS OSOS WATER RECYCLING FACILITY - DEVELOPMENT ABD DESIGN-BUILD SUPPORT
SUBJECT:	PROCESS ANALYSIS AND MASS BALANCE

Calc by	Date	Time	Chk by/Date	FileName:
CFP	05/03/2012	3:47 PM		Biotran Updated.xls

Biotran-1701

		Design Ditch w/local septage	Design Ditch w/local septage	Setup info	Basis
Annual Average Plant Flow, mgd	*	0.93	0.93		
Design (Max-Month) Flow, mgd		1.23	1.23		
- Filterable Components, mg/L					
-- NH3-N, mg/L		0.5	0.5		
-- NO3-N + NO2-N, mg/L		1.9	1.9		
-- Alkalinity, mg/L		117	117		
-- Filterable ("soluble") BOD, mg/L		1.0	1.0		
-- Total soluble Organic N, mg/L		2.4	2.4		
o VSS destruction					
- VSS Destruction Reaction Rate					
-- First Order Rate Constant, K, day-1	*	0.2	0.2		
-- Solids Detention Time, days		4.0	4.0		
-- Kinetic rate factor		0.444	0.444		
- VSS destroyed, %		12.0	11.9		
- VSS destroyed, lb/d		245	242		
- Solids remaining, lb/d		2,579	2,570		
- Undecanted concentration, mg/L		4,856	5,171		
- VSS fraction remaining		0.69	0.69		
o Dewatering/Decant flow					
- Sludge Conc. Target, mg/L	*	25,000	25,000		
- Dewatering, Percent of Influent		81.1	79.8		
- Return flow, mgd		0.052	0.048		
- Remaining flow, mgd		0.012	0.012		
- Sludge Conc., mg/L		25,000	25,000		
o Dewatering/Decant Operation					
- Dewater from Influent (1) or from Digester (0)?	*	0	0		
- Actual Feed Flow to (First) Aeration Tank, mgd		0.064	0.060		
o Basin Sizes					
- Target SRT (HRT) in Digester Only, d	*	4	4		
-- Resulting Combined SRT in AD plus ABs, d		25.4	25.8		
- Number of Units [Note]	*	2	2		Default
-- Area, each, sf	*	269	268		Default
-- Peak Side Water Depth, ft	*	15.0	15.0		Default
-- Average Operating Depth, ft	*	12.0	12.0		Default
-- Total volume, mil gal		0.0482	0.0482		
o Detention Time					
- Solids reten time (after decant), d		4.0	4.0		
-- Temperature, C	*	20.3	20.3		
-- T x SRT		81	81		
- Total SRT, including A/S Aer Basin, days		25.4	25.8		
o Intermittent Operation for N Removal					
- Total hours aerating per day	*	24	24		
o Nitrogen Balance over Digester(s)					
- Influent to (First) Aeration Tank					
-- NH3-N, lb/d		0.3	0.2		
-- NO3-N + NO2-N, lb/d		1.0	0.9		
- Organic N released as NH3-N, lb/d		18	17		
-- Effluent NH3-N, mg/L (est)	*	2.0	2.0		Default
-- NH3-N converted to NO3-N, lb/d		17	17		
Effluent NO3-N as Operated, mg/L (est)	*	5	5		Default

CAROLLO ENGINEERS, INC

W.O./CLIENT:	8930A.10 / SAN LUIS OBISPO COUNTY
PROJECT:	LOS OSOS WATER RECYCLING FACILITY - DEVELOPMENT ABD DESIGN-BUILD SUPPORT
SUBJECT:	PROCESS ANALYSIS AND MASS BALANCE

Calc by	Date	Time	Chk by/Date	FileName:
CFP	05/03/2012	3:47 PM		Biotran Updated.xls

Biotran-1701

		Design Ditch w/local septage	Design Ditch w/local septage	Setup info	Basis
Annual Average Plant Flow, mgd	*	0.93	0.93		
Design (Max-Month) Flow, mgd		1.23	1.23		
-- (Without denitrification, mg/L)		32	34		
- NO3-N Denitrified, lb/d		15	15		
o Oxygen required					
- VSS destruction					
-- lb O2/lb VSS destroyed		1.42	1.42		
-- lb O2 used, lb/d		348	343		
- Nitrification					
-- lb O2 used for nitrif, lb/d		77	76		
- Denitrification					
-- lb O2 recovered, lb/d		-44	-43		
- Total Oxygen used, lb/d		382	376		
o Oxygen required during Air-On cycle					
-- lb/hr		16	16		
-- lb/day (effective, while aerating)		382	376		
o Aerator/Diffuser Requirements					
- See subsequent Section, below					
o Alkalinity Addition					
- Effluent Alk without Alk Addition		112	112		
- Min. Additional Alkalinity Required, mg/L	*	0	0		
-- as lb/d CaCO3		0	0		
-- as lb/d Raw Lime (93% CaO)		0	0		
- Actual Raw Lime Added, lb/d	*	0	0		
-- Actual Alkalinity Increase, mg/L		0	0		
o Dewatering from Influent		NA	NA		
- Flow Rate, mgd		0.0000	0.0000		
- Characteristics, mg/L					
-- BOD		22	22		
-- TSS	*	150	150		
-- VSS		108	108		
-- NH3-N		0.5	0.5		
-- Organic-N		7.9	7.9		
-- NO3-N + NO2-N		1.9	1.9		
-- Alkalinity		117	117		
o Dewatering/Decant directly from Digester					
- Flow Rate, mgd		0.0516	0.0475		
- Characteristics, mg/L					
-- BOD		12	12		
-- TSS	*	150	150		Default
-- VSS		104	104		
-- NH3-N		2.0	2.0		Default
-- Organic-N		10.5	10.5		
-- NO3-N + NO2-N		5.0	5.0		
-- Alkalinity		112	112		
o Digested Sludge					
- Flow Rate, mgd		0.012	0.012		
- Characteristics, mg/L					
-- BOD		2074	2055		
-- TSS		25,000	25,000		

		Design Ditch w/local septage	Design Ditch w/local septage	Setup info	Basis
Annual Average Plant Flow, mgd	*	0.93	0.93		
Design (Max-Month) Flow, mgd		1.23	1.23		
-- VSS		17,353	17,349		
-- NH3-N		2	2		
-- Organic-N		1,253	1,252		
-- NO3-N + NO2-N		5	5		
-- Alkalinity		112	112		
o Digested Sludge Routing		Dewat	Dewat		
AERATION REQUIREMENTS FOR AEROBIC DIGESTER					
o Oxygen required during Aeration period					
- lb/day (effective, while aerating)		382	376		
o Aeration Method					
- Surface Aeration (1) or Diffused Air (2)?	*	1	1		
o Diffused Aeration - **Summary**		Coarse Bubble	Coarse Bubble		
- Air Supply while operating, scfm		531	524		
- Mixing Air, scfm/sf	*	0.18	0.18		Default
- Mixing Air, scfm		97	97		
- Controlling Air Rate, scfm		531	524		
- Aeration capacity, installed, scfm		691	681		
- Power consumption while operating, hp		26	25		
- Average hp/day		26	25		
- Installed hp, total		33	33		
o Aeration Analysis					
- Basic design information					
-- Design Water Temperature, C		27.7	27.7		Summer
-- *Theta* factor	*	1.024	1.024		Default
-- Temp. correction, *Tau*		0.87	0.87		
-- Site Elevation above MSL, ft	*	150	150		Site
-- ..Pressure correction, *Omega*		0.99	0.99		
-- *Beta* factor	*	0.99	0.99		Default
o <u>Diffused Aeration</u>					
o Oxygen Transfer Efficiency					
- Diffuser Type		Coarse Bubble	Coarse Bubble		
- Operating Average DO, mg/L	*	2.0	2.0		
- Operating depth for this calculation, ft	*	12.0	12.0		
- Diffuser submergence, ft		10.5	10.5		
- Air loading, scfm/unit [Note]		15.0 scfm/dfr	15.0 scfm/dfr		
- Floor Coverage					
- Clean Water SOTE	*	9.2	9.2		Mfr. lit.
- Site Conditions Adjustment Factor					
F = Actual / Standard OTE					
-- Alpha factor, including fouling		0.40	0.40		Estimate
-- Equilibrium C*20		9.91	9.91		
..Depth Adjustment Factor	*	0.3	0.3		Default
- F = Alpha x [*Theta* ^(T-20)]		0.31	0.31		

		Design Ditch w/local septage	Design Ditch w/local septage	Setup info	Basis
Annual Average Plant Flow, mgd	*	0.93	0.93		
Design (Max-Month) Flow, mgd		1.23	1.23		
x (*Tau Beta Omega* C*20 - C)/C*20					
- Oxygen Transfer Efficiency		2.84	2.84		
OTE = F x SOTE		Percent	Percent		
Preliminary Estimate					
o SOTR Required					
- Average Day @ Design flow					
-- Actual Ox Tr Requd, AOTR, lb/d		382	376		
-- Site Conditions Adjustment, F		0.31	0.31		
-- Standard Ox Tr Rate, SOTR, lb/d		1,233	1,216		
SOTR = AOTR / F					
o Air Supply Required					
- Average Day @ Design flow					
-- Ox Transfer Rate, AOTR, lb/d		382	376		
-- Oxygen Supplied, lb/min		9.3	9.2		
-- cf Air/lb Oxygen		57.0	57.0		
[23.3 lb O2/100 lb Air]					
[0.0753 lb Air/scf]					
-- Total Blower Air while Operating, scfm		531	524		
- Peak Day @ Design Flow					
-- Peaking factor	*	1.3	1.3		Default
-- Total Blower Air provided, scfm		691	681		
o Diffusers					
- Expressed as active sq ft or # diffusers		dfr	dfr		
- Recommended					
-- Air Loading, scfm/(sf or dfr)		15.0	15.0		
-- Number recommended, total		35	35		
- Actual Installed, total for all basins	*	35	35		
- Air Loading, scfm/sf or dfr					
-- Daily Average while operating		15.00	15.00		
- Floor Coverage					
-- Total Floor Area in Service, sf					
-- Coverage					
.. Expressed as					
- Active sf/diffuser, or 1		1	1		
- Number of diffuser units		35	35		
o Blower Discharge pressure					
- Head, ft water					
-- Peak Submergence (tank full)		13.5	13.5		
-- Diffuser head loss		0.3	0.3		
-- Pipe & Valve friction		2.5	2.5		
-- Total Head, ft		16.25	16.25		
- Discharge pressure, psig		7.0	7.0		
o Delivered Horsepower while Operating					
- Max Operating Air Temp, C	*	32.7	32.7		Default
- Barometric Pressure, psia		14.6	14.6		
- Blower Suction Pressure, psia		14.3	14.3		
- Daily Average Total Air, scfm		531	524		
- Avg Delivered Horsepower, hp		16	15		

CAROLLO ENGINEERS, INC				
W.O./CLIENT:	8930A.10 / SAN LUIS OBISPO COUNTY			
PROJECT:	LOS OSOS WATER RECYCLING FACILITY - DEVELOPMENT ABD DESIGN-BUILD SUPPORT			
SUBJECT:	PROCESS ANALYSIS AND MASS BALANCE			
Calc by	Date Time	Chk by/Date	FileName:	
CFP	05/03/2012 3:47 PM		Biotran Updated.xls	

Biotran-1701		Design Ditch w/local septage	Design Ditch w/local septage	Setup info	Basis
Annual Average Plant Flow, mgd	*	0.93	0.93		
Design (Max-Month) Flow, mgd		1.23	1.23		
- Peak Day Delivered hp		20	20		
o Wire power required					
- Energy Efficiency, %	*	61.0	61.0		Default
- Wire power required, hp					
-- Daily Average		26	25		
-- Firm Installed		33	33		
FEED TO DEWATERING					
o Dewatering Process		Belt Pr	Belt Pr		
o Flow rate, mgd					
- Primary Sludge, Direct or Thickened		0.000	0.000		
- WAS, Direct or Thickened		0.000	0.000		
- From Anaerobic Digester		0.000	0.000		
- From Aerobic Digester		0.012	0.012		
- Total		0.012	0.012		
o Total Solids, lb/d					
- Primary Sludge, Direct or Thickened		0	0		
- WAS, Direct or Thickened		0	0		
- From Anaerobic Digester		0	0		
- From Aerobic Digester		2,579	2,570		
- Total		2,579	2,570		
o VSS, lb/d					
- Primary Sludge, Direct or Thickened		0	0		
- WAS, Direct or Thickened		0	0		
- From Anaerobic Digester		0	0		
- From Aerobic Digester		1,790	1,783		
- Total		1,790	1,783		
o Organic N in VSS, lb/d					
- Primary Sludge, Direct or Thickened		0	0		
- WAS, Direct or Thickened		0	0		
- From Anaerobic Digester		0	0		
- From Aerobic Digester		129	128		
- Total		129	128		
o Soluble Characteristics, mg/L					
- Primary Sludge, Direct or Thickened					
-- NH3-N		39	39		
-- NO3-N + NO2-N		0	0		
-- Alkalinity		250	250		
-- Filterable ("soluble") BOD		161	161		
-- Soluble Organic N		8	8		
- WAS, Direct or Thickened					
-- NH3-N		0.5	0.5		
-- NO3-N + NO2-N		2	2		
-- Alkalinity		117	117		
-- Filterable ("soluble") BOD		1	1		
-- Soluble Organic N		2	2		
- From Anaerobic Digester					
-- NH3-N		0	0		
-- NO3-N + NO2-N		0	0		

CAROLLO ENGINEERS, INC					
W.O./CLIENT:	8930A.10 / SAN LUIS OBISPO COUNTY				
PROJECT:	LOS OSOS WATER RECYCLING FACILITY - DEVELOPMENT ABD DESIGN-BUILD SUPPORT				
SUBJECT:	PROCESS ANALYSIS AND MASS BALANCE				
Calc by	Date Time	Chk by/Date	FileName:		
CFP	05/03/2012 3:47 PM		Biotran Updated.xls		

Biotran-1701		Design Ditch w/local septage	Design Ditch w/local septage	Setup info	Basis
Annual Average Plant Flow, mgd	*	0.93	0.93		
Design (Max-Month) Flow, mgd		1.23	1.23		
-- Alkalinity		0	0		
-- Filterable ("soluble") BOD	*	700	700		
-- Soluble Organic N		5	5		
- From Aerobic Digester					
-- NH3-N		2	2		
-- NO3-N + NO2-N		5	5		
-- Alkalinity		112	112		
-- Filterable ("soluble") BOD		0	0		
-- Soluble Organic N		3	3		
- Total Dewatering Input					
-- NH3-N		2	2		
-- NO3-N + NO2-N		5	5		
-- Alkalinity		112	112		
-- Filterable ("soluble") BOD		0	0		
-- Soluble Organic N		3	3		
BELT PRESS OR GRAVITY BELT DEWATERING		Belt Pr	Belt Pr		
o Sludge Feed					
- Flow rate, mgd		0.012	0.012		
- Total Solids, lb/d		2,579	2,570		
- Total VSS, lb/d		1,790	1,783		
o Number of Presses (2m)	*	2	2		
- Number of Units in Service	*	1	1		
- Feed Rate, gpm per unit	*	110	110		Default
- Operating cycle					
-- days/week	*	6	6		
-- hours/day (calc)		2.1	2.1		
o Sludge Cake					
- Capture, %	*	85	85		Default
- Concentration, %	*	8.0	8.0		Default
- Cake Solids, lb/d					
-- Dry Solids, lb/d		2,192	2,184		
-- Wet Cake, tons/d		13.7	13.7		
- Flow, mgd		0.0033	0.0033		
o Filtrate					
- Filtrate Flow, mgd		0.009	0.009		
- Characteristics, mg/L					
-- BOD		18	18		Default
-- TSS	*	250	250		Default
-- VSS		174	173		
-- NH3-N		2	2		
-- Organic-N		13	12		
-- NO3-N + NO2-N		5	5		
-- Alkalinity		112	112		
o Wash Water					
- Wash water, mgd/mgd feed	*	1.00	1.00		Default
-- Wash Water flow, mgd		0.012	0.012		
- Solids in Wash Water					

CAROLLO ENGINEERS, INC

W.O./CLIENT:	8930A.10 / SAN LUIS OBISPO COUNTY
PROJECT:	LOS OSOS WATER RECYCLING FACILITY - DEVELOPMENT ABD DESIGN-BUILD SUPPORT
SUBJECT:	PROCESS ANALYSIS AND MASS BALANCE

Calc by	Date	Time	Chk by/Date	FileName:
CFP	05/03/2012	3:47 PM		Biotran Updated.xls

Biotran-1701

	Design Ditch w/local septage	Design Ditch w/local septage	Setup info	Basis
Annual Average Plant Flow, mgd	* 0.93	0.93		
Design (Max-Month) Flow, mgd	1.23	1.23		
-- Unrecovered Solids, lb/d	387	385		
-- Solids in Filtrate	18	18		
-- Solids in Wash Water, lb/d	368	367		
-- TSS in Wash Water, mg/L	3,664	3,657		
- Characteristics, mg/L				
-- BOD	265	264		
-- TSS	3,664	3,657		
-- VSS	2,544	2,538		
-- NH3-N	0.5	0.5		
-- Organic-N	186	185		
-- NO3-N + NO2-N	2.1	2.1		
-- Alkalinity	117	117		
-- Filterable ("soluble") BOD	1.0	1.0		
-- Total soluble Organic N	2.4	2.4		
o Combined Filtrate & Wash Water				
- Flow, mgd				
-- Filtrate	0.009	0.009		
-- Wash Water	0.012	0.012		
-- Total	0.021	0.021		
- Characteristics, mg/L				
-- BOD	161	161		
-- TSS	2,226	2,221		
-- VSS	1,545	1,542		
-- NH3-N	1.1	1.1		
-- Organic-N	113	112		
-- NO3-N + NO2-N	3	3		
-- Alkalinity	115	115		
-- Filterable ("soluble") BOD	0.6	0.6		
-- Total soluble Organic N	2.7	2.7		

COASTAL DEVELOPMENT PERMIT FOR THE LOS OSOS WASTEWATER PROJECT (CDP A-3-SLO-09-055/069) AND RESPONSIBILITY MATRIX FOR PERMIT CONDITIONS

California Coastal Commission

COASTAL DEVELOPMENT PERMIT

CDP A-3-SLO-09-055/069 (Los Osos Wastewater Project)

Issue Date: September 7, 2010

Coastal development permit (CDP) number A-3-SLO-09-055/069 was approved by the California Coastal Commission on June 11, 2010. CDP A-3-SLO-09-055/069 provides for the construction and operation of a community sewer system, including a treatment plant, collection/disposal/reuse facilities, and all associated development and infrastructure (all as more specifically described in the Commission's CDP file). CDP A-3-SLO-09-055/069 is subject to certain terms and conditions, including the standard and special conditions beginning on page 2 of this CDP.

By my signature below, the CDP is issued on behalf of the California Coastal Commission:

9/7/2010

Dan Carl, Central Coastal District Manager for Peter M. Douglas, Executive Director

Acknowledgement

The undersigned Permittees acknowledge receipt of this coastal development permit and agree to abide by all terms and conditions thereof. The undersigned Permittees acknowledge that Government Code Section 818.4 (that states in pertinent part that "a public entity is not liable for injury caused by the issuance of any permit") applies to the issuance of this coastal development permit.

9/17/2010

Permittee: San Luis Obispo County Public Works Department Date

Please note that this coastal development permit is not valid unless and until a copy of it with the signed acknowledgement has been returned to the California Coastal Commission's Central Coast District Office (14 Cal. Admin. Code Section 13158(a)).

Standard Conditions

1. **Notice of Receipt and Acknowledgment.** The permit is not valid and development shall not commence until a copy of the permit, signed by the Permittee or authorized agent, acknowledging receipt of the permit and acceptance of the terms and conditions, is returned to the Commission office.

2. **Expiration.** The permit will expire on June 11, 2012 if development has not commenced by that date. Development shall be pursued in a diligent manner and completed in a reasonable period of time. Application for extension of the permit must be made prior to the expiration date.

3. **Interpretation.** Any questions of intent or interpretation of any condition will be resolved by the Executive Director or the Commission.

4. **Assignment.** The permit may be assigned to any qualified person, provided assignee files with the Commission an affidavit accepting all terms and conditions of the permit.

5. **Terms and Conditions Run with the Land.** These terms and conditions shall be perpetual, and it is the intention of the Commission and the Permittee to bind all future owners and possessors of the subject property to the terms and conditions.

Special Conditions

1. **Final Project Plans.** PRIOR TO CONSTRUCTION, the Permittee shall submit two copies of Final Project Plans to the Executive Director for review and approval. The Final Project Plans shall include and shall be substantially in conformance with the plans associated with the proposed project description (see Section B.3. of this report) except that they shall be revised and supplemented to comply with the following requirements:

   a. **Treatment Plant Site Approved Development Envelope.** All development (including but not limited to buildings, tanks, infrastructure, parking, walkways, fences, etc.) shall be located within the development envelope and in the general configuration shown on Exhibit 2 (*Exhibit 1-3, Treatment Plant Site Plan*; last dated revised on April 13, 2010, and dated received in the Commission's Central Coast District Office on April 19, 2010). Development shall be prohibited outside of the approved development envelope except for habitat restoration and enhancement related development (see special condition 3(b) below) and access road related development (see special condition 1(b) below). Development shall be arranged so that activity and direct light that may be visible from outside of the development envelope is limited to the maximum extent feasible, and so that any activity that is unavoidably visible is minimized in its intensity. All development shall be identified on the Final Project Plans.

   b. **Treatment Plant Site Access Road.** The access road shall be located along the existing unpaved access road alignment extending from Los Osos Valley Road to the approved development envelope along the eastern property line of the Los Osos Mortuary and Memorial Park site and the western property line of the Andre site in such a manner as to limit its width and overall length as much as possible. The access road shall include measures to effectively screen noise

and activity associated with access road traffic and activity from adjacent properties so long as such screen does not itself degrade public views from along Los Osos Valley Road. If the Permittee conclusively demonstrates that the above access road location is infeasible, then the access road shall be located as shown on Exhibit 2 (*Exhibit 1-2 Overall Project Site Plan*, New Access Road, last dated revised on April 13, 2010, and dated received in the Commission's Central Coast District Office on April 19, 2010) subject to all the same siting and design criteria, and subject to the additional requirement that a mitigation plan for impacts to the agricultural use and development of the property located between the access road, Los Osos Valley Road, and the Los Osos Mortuary and Memorial Park site shall be submitted for Executive Director review and approval.

c. **Treatment Plant Site Design.** The design and appearance of all development shall reflect a rural agricultural theme (i.e., simple and utilitarian lines and materials, including use of board and bats, corrugated metal, muted earth tone colors, etc.). The plans shall clearly identify all measures that will be applied to ensure such design aesthetic is achieved, including with respect to all structures and all other project elements within view of Los Osos Valley Road (including the access road itself, all drainage facilities, curbs, landscaping, screens, signs, etc.). Development shall be sited and designed so as to reduce its visibility from Los Osos Valley Road to the maximum extent feasible. At a minimum, the plans shall clearly identify all structural elements, materials, and finishes (including through site plans and elevations, materials palettes and representative photos, product brochures, etc.).

d. **Pump Station and Related Development.**

1. **Pump Station Design**. All pump stations and all related development, including all power boxes and buildings, shall be sited and designed to limit impacts on habitat areas and public views, including through limiting their footprint and proximity to habitat areas as much as possible, siting elements below ground where feasible, minimizing the scale of above ground elements as much as possible, limiting above-ground access components (including manhole/hatch entries) as much as possible, using surface treatment and structural design consistent with and compatible with the immediately surrounding environment, limiting lighting to that necessary for public safety, and removing non-native invasive plant species on each site and landscaping with appropriate native plant materials (see also special condition 3(d)) including so that landscaping can help soften the appearance of any elements that are unavoidably above ground and to ensure seamless connectivity to surrounding habitat and vegetation as much as possible.

2. **Midtown Pump Station.** The Midtown pump station shall be sited and designed to limit its footprint and depth (from the road). The Midtown pump station power building shall be relocated across Palisades Avenue to an already disturbed area of Los Osos Community Park in a location where it will have the least impact on Park use and aesthetics.

3. **Lupine Street Pump Station.** The Lupine Street pump station and standby power building shall be set back a minimum of 75 feet from the edge of wetlands located to the south and west of the pump station site.

e. **Lupine Street Force Main.** The force main that conveys sewage from the Lupine Street Pump Station towards the treatment plant shall be routed from the Lupine Street Pump Station east on Lupine Street, then south on Fearn Avenue, then east on Binscarth Road, and then south on Pine Avenue, terminating at Los Osos Valley Road.

f. **Recycled Water Re-use Infrastructure.** All recycled water reuse pipelines and related development shall be clearly identified, including all such development noted on the overall project site plan submitted to the Commission (titled *Exhibit 1-2, Overall Project Site Plan*, last dated revised April 13, 2010; dated received in the Commission's Central Coast District Office April 19, 2010) and also including connecting segments to each of the receiver sites identified there.

g. **Lighting.** All interior lighting shall be located so as to minimize the potential for light and glare to be visible from within adjacent habitat areas, including adjacent restoration and enhancement areas. All exterior lighting shall be shielded and be of the lowest intensity feasible in order to avoid artificial light pollution from project facilities into adjacent areas and the night sky. All exterior lighting elements adjacent to habitat areas, including adjacent to restoration and enhancement areas, shall be avoided where possible and where unavoidable for safety purposes shall be the minimum necessary to meet safety requirements, shall be shielded, and shall be directed downward and away from such habitat areas.

h. **Landscaping.** Final Plans shall include landscape and irrigation parameters that shall identify all plant materials (size, species, quantity), all irrigation systems, and all proposed maintenance for landscaping at both the treatment plant site (including along the access road) and at all pump station locations. All plant materials shall be native and non-invasive species selected to be complimentary with the mix of native habitats in the project vicinity, prevent the spread of exotic invasive plant species, and avoid contamination of the local native plant community gene pool. The landscape and irrigation plans shall be designed to protect and enhance native plant communities on and adjacent to the development locations, including required restoration and enhancement areas, and to provide a transitional buffer between native habitat areas and authorized development. Landscaping (at maturity) shall also be capable of partial/mottled screening and softening the appearance of new development as seen from public viewing areas as much as possible. All landscaped areas shall be continuously maintained by the Permittee in a litter-free, weed-free, and healthy growing condition. No plant species listed as problematic and/or invasive by the California Native Plant Society, the California Invasive Plant Council, or as may be so identified from time to time by the State of California, and no plant species listed as a 'noxious weed' by the State of California or the U.S. Federal Government shall be planted or allowed to naturalize or persist at the treatment plant site (including along the access road) and at all pump station locations.

i. **Sign Plan.** All signs associated with the approved project and identifying any component of it as seen from public viewing areas shall be identified and details showing the location, materials, design, and text of all signs shall be provided. The signs shall be sited and designed so as to provide clear information without adversely impacting public views and/or the character of the area in which the sign is located. At least three public education/interpretation signs and/or

displays related to the project shall be installed at appropriate locations (e.g., at the Broderson site, at the Midtown site, and at the Giacomazzi site) easily accessible by the public, including in relation to the treatment plant site and at individual pump stations with significant above ground features.

j. **Street Reconstruction.** The Plans shall require that all public roadway work, including and up to complete roadway reconstruction, following installation/construction of approved project elements that impact public roadways shall be conducted in a manner that incorporates low impact development (LID) techniques and water quality protection systems to the maximum amount feasible.

k. **Walker Site.** The 6-acre Walker site (see Exhibit 2), although restoration of this area is not required until after it is no longer being used as the primary construction staging site for the approved project, shall be to be returned to its pre-project condition, or better (from a habitat perspective).

l. **Construction.** All construction staging and related areas shall be identified, and all development associated with such areas shown on a site plan. All such areas within which construction staging are to take place shall be minimized to the maximum extent feasible in order to minimize impacts on resources (e.g., terrestrial habitat, wetlands, creeks, riparian areas, or other sensitive resource areas, etc.). All measures to be taken to minimize impacts associated with construction staging and related areas shall be identified, including but not limited to screening, fencing, landscaping, signage, and designation of various activity and storage areas on the site. If additional construction staging and related areas are needed following approval of Final Plans, such areas shall be identified in a plan and submitted for Executive Director review and approval. The Final Plans shall require that copies of the signed CDP be maintained in a conspicuous location at the construction staging area at all times, and that such copies be available for public review on request. All persons involved with the construction shall be briefed on the content and meaning of the CDP, and the public review requirements applicable to them, prior to commencement of construction. The Final Plans shall also require that a primary construction coordinator be designated for public inquiries regarding the construction, and that their contact information (i.e., address, phone numbers, etc.) including, at a minimum, a telephone number available 24 hours a day for the duration of construction, be conspicuously posted at the construction staging area and at individual construction sites where such contact information is readily visible from public viewing areas, along with indication that the construction coordinator should be contacted in the case of questions regarding the construction (in case of both regular inquiries and emergencies). The construction coordinator shall record the name, phone number, and nature of all complaints received regarding the construction, and shall investigate complaints and take remedial action, if necessary, within 24 hours of receipt of the complaint or inquiry.

The Permittee shall undertake development in accordance with the approved Final Project Plans.

2. **Septic System Decommissioning Plan.** PRIOR TO ANY CONNECTION TO THE APPROVED WASTEWATER PROJECT, the Permittee shall submit two copies of a Septic System

Decommissioning Plan to the Executive Director for review and approval. The Septic System Decommissioning Plan shall clearly identify all measures to be taken to appropriately decommission existing septic tank systems and to connect such users to the approved project. The Plan shall provide a process for evaluating septic systems for possible on-site reuse, including for on-site filtration and percolation of stormwater to the degree feasible and appropriate, and a process for implementing such conversion or for implementing appropriate abandonment measures depending on which measure property owners choose. The Permittee shall undertake development in accordance with the approved Septic System Decommissioning Plan.

3. **Habitat Management Plan.** PRIOR TO CONSTRUCTION, the Permittee shall submit two copies of a Habitat Management Plan to the Executive Director for review and approval. The Habitat Management Plan shall provide for restoration and enhancement of the following areas to self-sustaining natural habitat states, and for management and protection of such areas as habitat areas in perpetuity:

   a. **Broderson Site.** The 80-acre Broderson site, of which up to 8 acres is allowed to be used for the project leach field provided this area too is subject to Plan requirements designed to ensure habitat value in this 8-acre area as much as possible while recognizing the underlying leach field infrastructure and its ongoing use and maintenance requirements.

   b. **Giacomazzi Site.** The 8.3 acres of the Giacomazzi site that is located outside of the approved development envelope and that includes identified wetland and related resources and their buffer (see Exhibit 8).

   c. **Midtown Site.** The 12.24-acre Midtown site (see Exhibit 2), of which a small area (approximately 0.10 acres, subject to special condition 1 requirements) is allowed to be used for the Midtown pump station and related development, provided this area, too, is subject to Plan requirements designed to ensure habitat value at the pump station location as much as possible while recognizing the underlying pump station infrastructure and its ongoing use and maintenance requirements.

   d. **Pump Station Sites.** The roughly 0.1-acre Sunny Oaks site, the 0.4-acre Solano site, and the 0.3-acre East Ysabel site (see Exhibit 2), a total of almost one acre, of which a small area at each site (approximately 0.32 total acres, subject to special condition 1 requirements) is allowed to be used for pump station and related development, provided these areas, too, are subject to Plan requirements designed to ensure habitat value at the pump station locations as much as possible while recognizing the underlying pump station infrastructure and its ongoing use and maintenance requirements.

The Habitat Management Plan shall require and provide for the Broderson site to be acquired prior to construction and granted by June 10, 2012 to an appropriate agency or conservation organization approved by the Executive Director, where such grant shall include funding adequate to implement the Habitat Management Plan over time. The Habitat Management Plan shall require and provide for the use of the Broderson, Giacommazi, Midtown, and Pump Station sites each to be restricted through recordation of a deed restriction, prohibiting all non resource-dependent development on each site, other than that associated with the approved project and consistent with the approved

Habitat Management Plan. The required deed restriction shall be in a form and content acceptable to the Executive Director and recorded free of prior liens and any other encumbrances that the Executive Director determines may affect the enforcement of the deed restriction.

The Habitat Management Plan shall be prepared by qualified restoration ecologists, shall be submitted with evidence of USFWS and CDFG review (or evidence that no review is required), and shall take into account the specific condition of each restoration and enhancement site (including soil, exposure, water flows, temperature, moisture, wind, etc.), as well as restoration and enhancement goals and success criteria. The Habitat Management Plan shall explicitly allow for potential public access interpretive facilities (including trails, signs/displays, etc.) even if such facilities are not part of initial Habitat Management Plan implementation activities, but rather will be a part of subsequent Plan implementation. At a minimum, the Plan shall provide for the following:

a. **Baseline.** A baseline assessment, including photographs, of the current physical and ecological condition of the restoration and enhancement areas. All existing topography, habitat types, and vegetation shall be depicted on a map.

b. **Goals.** A description of the goals of the plan, including in terms of topography, hydrology, vegetation, sensitive species, wildlife usage, and potential public interpretive access.

c. **Planting and Invasive/Non-Native Plant Provisions.** Except that the mature eucalyptus trees, and the mature cypress trees on the Broderson site shall remain and be managed as part of the Plan, all invasive and/or non-native plant species shall be removed from all restoration and enhancement areas, and native species of local stock appropriate to the habitats and the Los Osos area shall be planted,. A planting plan including the planting palette (seed mix and container plants), planting design, source of plant material, plant installation, erosion control, irrigation, and remediation shall be included. The planting palette shall be made up exclusively of native taxa that are appropriate to the habitats and the Los Osos region. Seed and/or vegetative propagules shall be obtained from local natural habitats so as to protect the genetic makeup of natural populations. Horticultural varieties shall not be used. Non-native and/or invasive plant species shall be prohibited. No plant species listed as problematic and/or invasive by the California Native Plant Society, the California Invasive Plant Council, or as may be so identified from time to time by the State of California, and no plant species listed as a 'noxious weed' by the State of California or the U.S. Federal Government shall be planted or allowed to naturalize or persist in the restoration and enhancement areas.

d. **Hydrology.** Ensuring that existing hydrological inputs, if applicable (e.g. for wetland areas at the Giacomazzi site), are maintained and if possible improved in favor of enhanced habitat value. To the extent there may be hydrological issues related to the habitat that is being restored and monitored overtime, these issues shall be considered and dealt with appropriately.

e. **Success Criteria**. A description of the measurable success criteria of the plan, including, at a minimum, the requirement that success be determined after a period of at least three years in which the sites have been subject to no remediation or maintenance activities other than weeding, and that this condition be maintained in perpetuity. Success criteria shall be defined for each habitat type, including in terms of species diversity, percent cover, invasive control, wildlife

usage, and hydrology, and for potential public interpretive access. Interim and long-term success criteria shall be identified, with final success criteria required to be maintained in perpetuity.

f. **Monitoring.** Monitoring and maintenance provisions including a schedule of the proposed monitoring and maintenance activities to ensure that interim and long-term success criteria are achieved, and including a plan for documenting and reporting the physical and biological "as built" condition of the restoration and enhancement areas within 30 days of completion of the initial Habitat Management Plan implementation activities (i.e., a simple report to describe field implementation of the approved plan in narrative and photographs, and to report any implementation problems and their resolution). Monitoring shall be appropriate to habitat type, and shall at a minimum include identification of field sampling protocols (including specific field sampling techniques to be employed), study sites (including experimental/revegetation sites and reference sites), data analysis methods (including descriptive and inferential statistics with specified acceptable variance and significance levels to examine sample size, univariate and multivariate comparisons, and/or other parameters as appropriate and necessary to assess progress toward and meeting of success criteria), and assessment of progress toward meeting identified success criteria.

g. **Reporting.** Provision for submission of annual monitoring reports (two copies each time) to the Executive Director for review and approval beginning the first year after completion of initial Habitat Management Plan implementation activities and shifting to an every five-year reporting cycle once long-term success criteria have been achieved. Each report shall document the condition of each restoration and enhancement area based on monitoring data (including with photographs taken from the same fixed points in the same directions), shall describe the progress towards reaching and/or maintaining the success criteria of the plan, and shall make recommendations, if any, on changes necessary to achieve success. Necessary changes, including identified remediation steps, shall be completed per the timetable identified in any approved report, or within 30 days of report approval where no such timetable is specified.

The Habitat Management Plan shall be implemented concurrent with construction of the approved project, shall be directed by qualified restoration ecologists, and initial Habitat Management Plan implementation activities (including at a minimum initial planting and non-native/invasive plant removal pursuant to the Plan) shall be completed prior to commencement of operation of the approved project.

The Permittee shall undertake development in accordance with the approved Habitat Management Plan.

4. **Agricultural Property Protection.** PRIOR TO CONSTRUCTION OF THE TREATMENT PLANT, the Permittee shall submit evidence to the Executive Director for review and approval indicating that an agricultural conservation easement(s) burdening off-site agricultural property have been granted in perpetuity to the County or another qualifying entity approved by the Executive Director along with adequate funding to compensate for reasonable administrative costs incurred by the easement holder. The easement shall provide agricultural conservation acreage at a ratio of at least 2:1 for the loss of agricultural land associated with the approved project, shall apply to

agricultural land within reasonable proximity of the project site that is of a quality that is reasonably similar to that of the agricultural land lost, and shall be submitted with evidence clearly showing and calculating the amount of agricultural land lost due to the project in closed polygons on site plans and all supporting documentation demonstrating compliance with the requirements of this condition.

5. **Los Osos Basin Recycled Water Management Plan.** PRIOR TO CONSTRUCTION, the Permittee shall submit two copies of a Los Osos Basin Recycled Water Management Plan (Basin Plan) to the Executive Director for review and approval. The objective of the Basin Plan shall be to ensure that implementation of the project, including the sites designated for disposal of the treated effluent, is accomplished in a manner designed to maximize long-term ground and surface water and related resource (including wetlands, streams, creeks, lakes, riparian corridors, marshes, etc.) health and sustainability, including with respect to offsetting seawater intrusion as much as possible, within the Los Osos Groundwater Basin. The Basin Plan shall be structured so as to allow its programs to be developed, and any physical development underlying the implementation of such programs constructed, concurrent with construction of the approved project, and for it to be implemented concurrent with commencement of operation of the approved project. The Basin Plan may be structured to allow phasing if necessary to better achieve Basin Plan objectives. The Basin Plan shall include the following main components:

   a. **Recycled Water Reuse Program.** As reflected in County condition 97, the Recycled Water Reuse Program shall ensure that all tertiary treated recycled water is disposed of in locations within the Los Osos Groundwater Basin that will maximize its ability to meet Basin Plan objectives, where the highest priority for reuse shall be replacing existing potable water use with recycled water use where feasible and appropriate, including with respect to both urban and agricultural reuse. The Reuse Program may include recycled water application at the Broderson leach field (not to exceed 448 afy on an average annual basis) and at the Bayridge leach field (approximately 33 afy or the amount shown to be necessary for maintaining Willow Creek and downstream resources in their pre-project state or better), but it shall prioritize beneficial reuse through (a) developing and installing recycled water connections and entering into delivery/use agreements with urban and agricultural property owners as much as possible, and (b) developing and installing other recycled water delivery systems, in both cases with a priority for locations where such beneficial reuse will go the furthest toward meeting Basin Plan goals. The Reuse Program may include other areas that may be beneficial to the Los Osos Groundwater Basin.

   b. **Water Conservation Program.** The Water Conservation Program required by the County project, which limits indoor water use to no more than 50 gallons per person per day on average within the Basin, shall be incorporated into the Recycled Water Management Plan. The Program shall be designed to help Basin residents to reduce their potable water use as much as possible through measures including but not limited to retrofit and installation of low water use fixtures, and grey water systems. The Program shall include enforceable mechanisms designed to achieve its identified goals, including the 50 gallons per person per day target, and shall include provisions for use of the $5 million committed by the Permittee to initiate water conservation measures pursuant to the Basin Plan as soon as possible following CDP approval. The Permitee shall coordinate with water purveyors to the maximum extent feasible to integrate this conservation program with purveyor implemented outdoor water use reduction measures.

c. **Monitoring Program.** The Monitoring Program shall be designed to quantitatively and qualitatively assess the effectiveness of the Basin Plan over time to ensure its objectives are achieved, and shall include: a baseline physical and ecological assessment of ground and surface water and related resources to be monitored; measurable goals and interim and long-term success criteria for those resources, including at a minimum clear criteria that demonstrate that the health and sustainability of Plan area resources are steadily improving over time, including with respect to seawater intrusion; monitoring provisions, including identification of appropriate representative resource monitoring locations and data types (e.g., groundwater levels and quality; wetland, stream, creek, riparian, and marsh plant and animal abundance, hydrology, and water quality; etc.) and a schedule for proposed monitoring activities. The Monitoring Program shall also include measures to clearly document the manner in which recycled water is being reused and water is being conserved pursuant to the Recycled Water Reuse and Water Conservation Programs.

d. **Reporting and Adaptive Management Program.** Annual reports (two copies) documenting implementation and effectiveness of the Basin Plan shall be submitted to the Executive Director for review and approval by December 31st of each year that the project operates. Each report shall include all monitoring data (including documenting all recycled water reuse for the preceding year, all water conservation efforts and effects, and all resource changes identified), shall describe the progress towards achieving the success criteria of the plan, and shall make recommendations, if any, on changes necessary to better meet Basin Plan objectives and achieve success. On the latter, the annual reports shall be premised upon the concept of adaptive management that responds to information developed and effects better understood over time in association with the project, and is intended to allow for project changes covered by this CDP, unless the Executive Director determines that a CDP amendment is necessary, through the annual report approval process provided that such changes result in better resource protection and better means to achieve Basin Plan objectives over the long-term. Changes, including identified remediation steps, shall be completed per the timetable identified in any approved annual report, or within 30 days of report approval where no such timetable is specified.

The Permittee shall undertake development in accordance with the approved Los Osos Basin Water Recycling Management Plan.

6. **Wastewater Service to Undeveloped Properties.** Wastewater service to undeveloped properties within the service area shall be prohibited unless and until the Estero Area Plan is amended to identify appropriate and sustainable buildout limits, and any appropriate mechanisms to stay within such limits, based on conclusive evidence indicating that adequate water is available to support development of such properties without adverse impacts to ground and surface waters, including wetlands and all related habitats.

7. **Amendment.** All future changes to the approved project, including changes in service area, shall be processed as amendments to this CDP. Any such amendment shall clearly demonstrate the manner in which the amendment would lead to better coastal resource protection, including at a minimum the manner in which it would help to better achieve the goals and meet the success criteria of the approved Los Osos Basin Resource Management Plan (see special condition 5).

8. **Conflict Resolution.** Any differences, conflicts, and/or questions of interpretation between elements of the proposed project description and these conditions shall be resolved in favor of these conditions and in the manner most protective of coastal resources as determined by the Executive Director.

9. **Liability for Costs and Attorneys Fees.** The Permittee shall reimburse the Coastal Commission in full for all Coastal Commission costs and attorneys fees (including but not limited to such costs/fees that are: (1) charged by the Office of the Attorney General; and (2) required by a court) that the Coastal Commission incurs in connection with the defense of any action brought by a party other than the Permittee against the Coastal Commission, its officers, employees, agents, successors and assigns challenging the approval or issuance of this permit, the interpretation and/or enforcement of permit conditions, or any other matter related to this permit. The Permittee shall reimburse the Coastal Commission within 60 days of being informed by the Executive Director of the amount of such costs/fees. The Coastal Commission retains complete authority to conduct and direct the defense of any such action against the Coastal Commission.

County of San Luis Obispo, Board of Supervisors
Development Plan / Coastal Development Permit DRC2008-00103
Los Osos Wastewater Project
CONDITIONS OF APPROVAL, November 24, 2009

Approved Development

1. This approval authorizes construction and operation of a community-wide sewer system for the portion of Los Osos described in Resolution No. 83-13 issued by the Regional Water Quality Control Board (see Attachment 1) and as described by application materials, supplemental materials made a part of the record, and shown in the EIR, including:

   a. A wastewater treatment facility, including all appurtenant structures, landscaping and site access to be located on the Giacomazzi site (APN 067-011-022);
   b. A wastewater collection system, including lateral lines from individual structures to the street, connection lines at each property, sewer mains, back-up power facilities and pump stations;
   c. Construction staging areas;
   d. Wastewater disposal facilities, distribution lines for urban and agricultural re-use, and monitoring wells;
   e. Wastewater sludge handling facilities at the wastewater treatment plant to enable the hauling of sludge to a disposal, recycling facility or co-generation facility;
   f. Primary staging areas at East Paso Robles Street including minor and temporary staging areas in the project area including the Giacomazzi site;
   g. Construction activities associated with the installation of approved facilities, including dewatering operations;
   h. A program for the mitigation of direct impacts to habitat for endangered species and agricultural resources;
   i. Construction of an underground pump station located at 3rd Street and the intersection of Paso Robles Avenue (unimproved), within 75' of a coastal wetland;
   j. Construction of harvesting wells and their associated piping and facilities are NOT authorized by this approval; and
   k. A water conservation program allowing a maximum water usage of 50 gallons per day / person for indoor water usage.

2. Except as otherwise required by the conditions of this permit, all development shall be substantially consistent with the site plan attached as Attachment 2, as well as with all final architectural elevations, color boards and landscape plans to be reviewed and approved by the Planning Director.

3. All development shall be consistent with the conditions contained herein. Prior to final design / layout of the East Paso Robles Avenue pump station and the Doris Avenue / Lupine Street pump station, the applicant shall provide verification to the satisfaction of the Planning Director, that the required 75 foot wetland setback will be met with the redesign / layout of said pump stations.

4. The approved service area for the wastewater treatment facilities corresponds to the area shown on the Service Area Map attached (see Attachment 1)

Future additions to the wastewater treatment service area shall require a separate coastal development permit, and must be preceded or submitted concurrently with an Local Coastal Plan (LCP) amendment that incorporates the proposed service area expansion within the Urban Service Line designated by the LCP.

5. No Guarantees of Development Approvals. Approval of this permit, or any method of financing the project utilized by the County (e.g., the established assessment program), does not guarantee County approval of any new or intensified uses within the service area. All new development proposals must be reviewed for consistency with the San Luis Obispo County certified Local Coastal Program (and/or the California Coastal Act, as applicable); such review shall consider, among other issues, the environmental impacts of the new development, including the impacts associated with the installation of lateral connections necessary to tie into the approved collection system. Wastewater treatment service shall only be provided to developments that have obtained the required coastal development approvals in a manner consistent with such approvals. Prior to construction, the County shall prepare a public notice to all property owners of record within the service area that includes a copy of this condition, and an explanation of its effect upon the ability to obtain wastewater treatment service for future development.

   Prior to the commencement of construction, said notice shall be mailed to all property owners within the service area, or noticed in three local newspapers and included in public information handouts provided by the County.

6. Tertiary Treatment. The treatment plant shall provide Disinfected Tertiary Recycled Water as defined at Section 60301.230 of Title 22 of the California Code of Regulations, which means a filtered and subsequently disinfected wastewater that meets the following criteria:

   (a) The filtered wastewater has been disinfected by either:

      (1) A chlorine disinfection process following filtration that provides a CT (the product of total chlorine residual and modal contact time measured at the same point) value of not less than 450 milligram-minutes per liter at all times with a modal contact time of at least 90 minutes, based on peak dry weather design flow; or

      (2) A disinfection process that, when combined with the filtration process, has been demonstrated to inactivate and/or remove 99.999 percent of the plaque-forming units of F-specific bacteriophage MS2, or polio virus in the wastewater. A virus that is at least as resistant to disinfection as polio virus may be used for purposes of the demonstration.

   (b) The median concentration of total coliform bacteria measured in the disinfected effluent does not exceed an MPN of 2.2 per 100 milliliters utilizing the bacteriological results of the last seven days for which analyses have been completed and the number of total coliform bacteria does not exceed an MPN of 23 per 100 milliliters in more than one sample in any 30 day period. No sample shall exceed an MPN of 240 total coliform bacteria per 100 milliliters.

Prior to providing tertiary treated water for agricultural uses the applicant shall develop a Recycled Water Management Plan for Agricultural Re-use. The use of tertiary treated water shall be consistent with resource protection strategies including but not limited to those designed to protect on and off site soils, and surface and groundwater resources through the use of appropriate site-specific management practices. The applicant shall consult with technical resource providers such as the University of California Cooperative Extension and USDA Natural Resources Conservation Service. The Plan shall be reviewed and approved by the Director of Planning and Building in consultation with the Agricultural Commissioner's Office prior to providing tertiary treated water for agricultural uses.

Prior to Construction

Permits

7. [Mitigation 5.5-C1] Prior to construction, an application for a Nationwide or Individual Permit shall be submitted by the County to the United States Army Corps of Engineers (USACE) pursuant to Section 404 of the Clean Water Act (CWA). If required, the County shall obtain a Nationwide or Individual Permit from the USACE for any impacts, temporary and permanent, to any areas within the proposed project which are determined to qualify as jurisdictional waters and wetlands of the U.S. The County shall implement all required conditions and special considerations stipulated within the Nationwide or Individual Permit during all relevant phases of development / construction.

8. [Mitigation 5.5-C2] Prior to construction, an application for a Water Quality Certification shall be submitted by the County to the Central Coast RWQCB pursuant to Section 401 of the Clean Water Act and the State Porter-Cologne Water Quality Act. If required, a Water Quality Certification shall be obtained from the Central Coast RWQCB for any impacts, temporary and permanent, to any areas within the proposed project which are determined to qualify as jurisdictional waters of the State. The County shall implement all required conditions and special considerations stipulated within the Water Quality Certification during all relevant phases of development / construction.

9. [Mitigation 5.5-C3] Prior to construction, a Notification of Lake or Streambed Alteration shall be submitted by the County to the CDFG pursuant to CFG Code Section 1602. If required, a Streambed Alteration Agreement shall be obtained from the CDFG for any impacts, temporary and permanent, to any areas within the proposed project which are determined to qualify as jurisdictional streambed or riparian habitat. The County shall implement all required conditions and special considerations stipulated within the Streambed Alteration Agreement during all relevant phases of development / construction.

10. Prior to construction, an NPDES Construction Activity Storm Water Permit shall be obtained. Appropriate BMPs, as established in the project NPDES Construction Storm Water Permit, shall be employed during project construction, which may include, but are not limited to, temporary sand bagging; construction of berms; installation of geofabric, and revegetation of areas by hydroseeding and mulching; actions for control of potential fuel or drill tailing release; the use of trench stabilizing and de-watering and requirements for disposal (i.e., location, quality) of water from dewatering activities. The NPDES permit shall apply to all proposed facilities, and shall address 50 to 100-year precipitation events to the extent feasible. Any erosion and sedimentation control netting or other

erosion and sedimentation control devises used for temporary or permanent erosion and sedimentation control, shall be limited to biodegradable mesh or other biodegradable products.

11. Prior to construction, the applicant shall provide an approved Fire Safety Plan from CalFire (consistent with their letter dated February 5, 2009) and prior to operation of the waste water treatment facility shall implement the requirements of the plan.

12. [Mitigation 5.9-C3] Prior to initiating grading activities, if it is determined that portable engines and portable equipment would be utilized, the contractor shall contact the SLOAPCD and obtain a permit to operate portable engines or portable equipment, and such engines or equipment shall be registered in the statewide portable equipment registration program. The SLOAPCD Compliance Division shall be contacted in order to determine the implementation requirements of this mitigation measure.

13. Prior to construction, the applicant shall obtain an encroachment permit from the County Department of Public Works for all work to be done in the County rights-of-way.

14. The project shall comply with the requirements of the National Pollutant Discharge Elimination System General Discharge, the Industrial Stormwater Program, and the County's Stormwater Pollution Control and Discharge Ordinance 3143. All discharges and dewatering activities shall be authorized by the Regional Water Quality Control Board.

Facility Design

15. Building heights for structures shall conform to the following, as measured in accordance with CZLUO 23.04.122:

    a. Treatment Plant. The buildings at the wastewater treatment facility will not exceed the following:
        i. Administrative Building: 28 feet
        ii. Maintenance Building: 35 feet
        iii. Bio-Air Building: 30 feet
        iv. Solids Building: 35 feet
        v. RAS WAS Station and Storage Tank: 31 feet
        vi. Secondary Clarifier (A): 25 feet
        vii. Secondary Clarifier (B): 23 feet
        viii. Electrical Building: 35 feet
        ix. Tertiary Treatment Building: 26 feet

    b. Standby Power Stations. Buildings shall not exceed 14 feet.

16. All facilities shall be designed to provide adequate and safe parking for facility operations personnel.

17. Signs shall conform to LUO 23.04.300. Prior to completion, the County shall provide signage at the treatment plant site indicating the facility and public amenities. Signs shall be approved by the Planning Director.

18. Buildings shall be designed to conform to energy efficiency requirements outlined in Title 24 of the California Code. Additional measures to be shown on construction plans include:

    a. Provide an on-site lunch room with refrigeration and food preparation (i.e., microwave) appliances to reduce daily trips to and from the treatment facility;
    b. Use of double paned windows in office area where interior heating/air conditioning will occur; and
    c. Use of energy efficient interior lighting where applicable.

Geologic Hazards

19. [Mitigation 5.4-E1] Prior to commencement of grading activities for each facility, erosion control measures shall be incorporated into the grading plans to minimize the potential for erosion or loss of top soil during grading to the satisfaction of the Planning Director. Any erosion and sedimentation control netting or other erosion and sedimentation control devises used for temporary or permanent erosion and sedimentation control, shall be limited to biodegradable mesh or other biodegradable products.

20. [Mitigation 5.4-E2] Prior to commencement of grading activities for each facility, vegetation/landscaping shall be provided on the graded cut and fill slopes to reduce the long-term potential for soil erosion or loss of topsoil to the satisfaction of the Planning Director.

21. [Mitigation 5.4-E3] Prior to commencement of grading activities for each facility, the plans shall provide for the control of surface water away from slopes to the satisfaction of the Planning Director in consultation with the Public Works Department.

22. All proposed facilities shall be designed and constructed in accordance with UBC Seismic Zone 4 regulations.

23. [Mitigation 5.4-B1] Prior to the commencement of construction for buildings at each proposed facility, the design of each facility shall be based on a facility-specific geotechnical report prepared by a California registered geotechnical engineer and professional geologist. The geotechnical report shall provide seismic data for use with at least the minimum requirements of the California Building Code (2007), as adopted by the County of San Luis Obispo.

24. [Mitigation 5.4-C1] Prior to completion of the improvement plans for the proposed project, a geotechnical report that addresses liquefaction hazards shall be prepared and approved by the Planning Director. The geotechnical report shall state the recommended actions for the collection system, effluent disposal system, treatment plant site, and all appurtenant facilities so that potential impacts from seismically-induced liquefaction would be reduced to less than significant. These recommendations shall be incorporated into the design of all proposed facilities that are part of the collection system and at the treatment plant site.

25. [Mitigation 5.4-C2] Prior to completion of improvement plans, an Emergency Response Plan (ERP) shall be prepared as part of the operation and maintenance plan for the proposed collection system. The ERP shall recognize the potential for liquefaction, seismic hazards and ground lurching, to impact the pipeline or other proposed facilities,

and specific high hazard areas shall be inspected for damage following an earthquake. "Soft Fixes" shall be incorporated in the ERP. Soft fixes typically consist of having a plan in-place to address the hazards, such as can be achieved by storing supplies and equipment for repair.

26. [Mitigation 5.4-F1] Prior to completion of the improvement plans for the proposed facilities, a geotechnical report that addresses the potential for lateral spreading, ground subsidence, and ground lurching and provides measures to reduce potential impacts to less than significant shall be prepared and approved by the Planning Director. These recommendations shall be incorporated into the design of the improvement plans for the proposed facilities.

27. [Mitigation 5.4-G1] Prior to completion of improvement and building plans for the proposed project, a design-level geotechnical report shall be prepared that addresses and reduces potential expansive soil impacts to less than significant. The expansive soil data shall be used with the requirements of the California Building Code (2007), as adopted by the County of San Luis Obispo. These recommendations shall be incorporated into the design of all proposed facilities that are part of the collection system and at the treatment plant site.

Cultural Resources

28. [Mitigation 5.6-B1] Avoidance of cultural resources is the paramount mitigation measure to protect cultural resources potentially impacted during project development. Avoidance of all known and unknown cultural resources shall be the primary and preferred mitigation. If avoidance is infeasible, then work shall only continue when it has been determined to be consistent with the required Treatment Plan and testing requirements.

29. [Mitigation 5.6-B2] A Treatment Plan shall be prepared that would detail the extensive scope of the proposed project, establish site types with corresponding levels of effort for mitigation, and detail data recovery and monitoring plans for the extent of the proposed project. The former Treatment Plan (Far Western 2001) prepared for the wastewater project shall be adapted and modified where appropriate for the current project.

30. [Mitigation 5.6-B4] If avoidance of recorded archaeological sites within any portion of the approved project design is not possible through project redesign, a phased program of site testing shall be undertaken to establish boundaries and evaluate the resources' potential eligibility to the California Register of Historical Resources under CEQA and the National Register of Historic Places under NEPA. If a site is determined ineligible, no further work is required. If a site is determined eligible, data recovery excavations shall be required to mitigate adverse effects incurred from project development.

31. [Mitigation 5.6-B6] Preconstruction monitoring shall occur in areas ranked as high in sensitivity for buried deposits. The area subject to this requirement is located along Los Osos Valley Road from Los Osos Creek east to the Cemetery Parcel. Mechanical backhoe trenching shall be conducted within the sensitive areas where any construction impacts will occur and shall be monitored by a qualified geo-archaeologist. Any identified intact deposits will be evaluated, and any deposits determined to be eligible to

the California Register and/or National Register shall require project redesign to avoid impacts, or data recovery to mitigate unavoidable impacts.

Traffic

32. [Mitigation 5.8-A1] Prior to construction, a traffic management plan shall be prepared for review and approval by the County of San Luis Obispo Traffic Department in consultation with the Planning Director. The traffic management plan shall be based on the type of roadway, traffic conditions, duration of construction, physical constraints, nearness of the work zone to traffic and other facilities (bicycle, pedestrian, driveway access, etc.). The traffic management plan shall include:

    a) Advertisement. An advertisement campaign informing the public of the proposed construction activities should be developed. Advertisements should occur prior to beginning work and periodically during the course of project construction. The advertising shall include notification of changes to bus schedules and potential changes to bus stop locations, potential impacts during school drop-off and pick-up times, and major intersections that may be impacted during construction.

    b) Property Access. Access to parcels along the construction area shall be maintained to the greatest extent feasible. Affected property owners shall receive advance notice of work adjacent to their property access and when driveways would be potentially closed.

    c) Schools. Any construction adjacent to schools shall ensure that access is maintained for vehicles, pedestrians, and bicyclists, particularly at the beginning and end of the school day.

    d) Buses, Bicycles and Pedestrians. The work zone shall provide for passage by buses, bicyclists and pedestrians, particularly in the vicinity of schools.

    e) Intersections. Traffic control (i.e. use of flag men) shall be used at intersections that are determined to be unacceptably congested due to construction traffic.

Access

33. Prior to commencement of grading activities, the applicant shall submit driveway construction plans to Public Works Encroachment for review and approval in consultation with the Planning Director. The plans shall show the reconstruction of the project driveway approach(es) at the Giacomazzi site in accordance with County Public Improvement Standard Drawing Numbers B-1e and A-5a (sight distance). The applicant shall secure an encroachment permit from Public Works prior to commencing any work within the public right-of-way.

34. If environmental permits from the Army Corps of Engineers or the California Department of Fish and Game are required for any public improvements that are to be maintained by the County, the applicant or his engineer, prior to the approval of the plans by the Department of Public Works in consultation with the Planning Director shall:

    a) Submit a copy of all such permits to the Department of Public Works and Planning Department; OR
    b) Documentation that the regulatory agencies have determined that said permit is not required.

Air Quality

35. [Mitigation 5.9-C1] Prior to commencement of grading activities, the applicant shall submit a Construction Activities Management Plan for the review and approval of the SLOAPCD. This plan shall include but not be limited to the following Best Available Control Technologies for construction equipment:

    a. Minimize the number of large pieces of construction equipment operating during any given period.

    b. Schedule construction related truck/equipment trips during non-peak hours to reduce peak-hour emissions and overall daily and quarterly emissions.

    c. Properly maintain and tune all construction equipment according to manufacturer's specifications.

    d. Fuel all off-road and portable diesel powered equipment including but not limited to: bulldozers, graders, cranes, loaders, scrapers, backhoes, generators, compressors, auxiliary power units, with ARB certified motor vehicle diesel fuel.

    e. All diesel construction equipment shall meet ARB's Tier 3 standard for off-road heavy duty diesel engines.

    f. All on-road heavy-duty trucks shall meet the ARB's 2007 or newer certification standard for on-road heavy-duty diesel engines.

    g. All on and off-road diesel equipment shall not be allowed to idle for more than 5 minutes. Signs shall be posted in the designated queuing areas and or job sites to remind drivers and operators of the 5 minute idling limit.

    h. Electrify portable equipment where possible throughout the project area.

    i. All diesel powered portable equipment used shall have tier 2 or tier 3 engines and retrofitted with an ARB level 3 verified diesel emissions control strategy (VEDEC).

    j. Locate construction staging areas at least 1000 feet from sensitive receptors.

36. The Construction Activity Management Plan (CAMP) should include but not be limited to the following elements:

    a. Schedule construction truck trips during non-peak hours to reduce peak hour emissions;

    b. Limit the length of the construction work-day period, if necessary;

    c. Phase construction activities to minimize overlapping emissions; and

    d. Construction Equipment composition and schedule including:

        1. Equipment Type

2. Equipment Model
3. Equipment Year
4. Engine Type
5. Engine Model
6. Engine Year
7. Engine Horsepower
8. Schedule of use

37. APCD and the County will establish an off-site mitigation program based on the ozone precursor, PM exceedence, and greenhouse gas emissions. The County may use the funding of this program to implement APCD approved emission reduction projects near the project site or may pay that funding level plus a 15 percent administration fee to the APCD for the APCD to implement emission reduction projects in close proximity to the project. The County will provide the funding at a time or schedule approved by the APCD to help facilitate emission offsets that are as timely.

38. Prior to commencement of grading activities, an updated air quality emissions analysis consistent with the CAMP and mitigation measures above will be submitted to determine if additional measures (e.g. off-site mitigation) are required to reduce the air quality impact below the levels of significance.

39. Prior to any grading activities associated with the project, the project proponent shall ensure that a geologic evaluation is conducted to determine if Naturally Occuring Asbestos (NOA) is present within the area that will be disturbed. If NOA is not present, an exemption request must be filed with the District. If NOA is found at the site, the applicant must comply with all requirements outlined in the Asbestos ATCM. This may include development of an Asbestos Dust Mitigation Plan and an Asbestos Health and Safety Program for approval by the APCD. Please refer to the APCD web page at http://www.slocleanair.org/business/asbestos.asp for more information or contact the APCD Enforcement Division at 781-5912.

40. An Odor Control Plan shall be submitted for review and approval of the San Luis Obispo County Air Pollution Control District prior to commencement of grading activities which shall be incorporated as conditions of the permit issued by the County for the construction and operation of the Los Osos wastewater project. The Odor Control Plan shall contain a Complaint Response Plan to address at least the following:

    a. A public outreach plan, including operator training in the handling of complaints; a program for informing the public regarding the complaint process; periodic neighborhood surveys of performance and responsiveness to complaints; and, a complaint hotline phone number. This public outreach plan shall be in place upon startup;

    b. An odor point identification map, which will aid the wastewater system operators and the SLOAPCD by identifying potential odor sources, a description of the odor point. This identification map and related information shall be completed within the first 3 months of startup;

    c. A list of immediate responses or actions to be taken to complaints, including, but not limited to:

1. The upstream addition of ferrous chloride (or other) injection system adjustments;

2. On-site odor checks to identify odor sources or system malfunctions, neighborhood complaint patrol and actions to be taken;

d. A Contingency Action Plan detailing the methods to which odor sources will be studied and a response action plan to control odors over the long term. This Plan shall be in place upon startup. Possible responses include, but are not limited to, the following:

1. Providing additional "negative air" containment or recovery system areas;

2. Additional treatment containment enclosure;

3. Additional or improved odor control, dispersal and/or air movement at pump stations, wet wells and the wastewater treatment plant;

4. Additional study of odor sources and possible solutions, which may include a dilution to threshold measurement for each potential odor source using the Bay Area Air Quality Management District's procedure outlined in their Regulation 7 "Odor Substances" 7-400 et seq and "Manual for Procedures", Volume IV, ST-I, ST-8, ST-il, 51-16 and ST-22 or SLOAPCD equivalent.

Noise

41. [Mitigation 5.10-A1] The County shall require that the treatment plant be designed so that the mechanical aeration system is located a minimum of 250 feet away from the nearest residence.

42. [Mitigation 5.10-A2] The County shall require that the treatment plant be designed so that the backup diesel generator is enclosed in a structure and is located a minimum of 250 feet away from the nearest residence.

43. Operation and maintenance plans for the treatment facility will ensure that all pumps and aerators are kept in proper working order.

44. [Mitigation 5.10-A3] The County shall require that the backup power facility structures for the in-town collection system be designed so that the noise created from the backup diesel generator that would be located inside the structure would not exceed 45 dBA Leq at the nearest property line. The noise from the backup diesel generator may be attenuated through the use of a "manufacturer enclosure" or through incorporation of noise attenuation design features into the backup power facility structure.

Hazards

45. [Mitigation 5.7-A1] Prior to any onsite construction activities at the proposed treatment plant sites, soils shall be sampled and analyzed by a licensed engineer or geologist approved by the County of San Luis Obispo Health Department to determine the level of residue for pesticides, herbicides, chemicals, and associated metals. If residues are found to be within acceptable amounts in accordance with the San Luis Obispo County Health Department (SLOCHD) and Environmental Protection Agency/Department of

Toxic Substance Control (DTSC) standards, then grading and construction may begin. If the residue is found to be greater than the SLOCHD and DTSC standards, all contaminated soils exceeding the acceptable limits shall be remediated and/or properly disposed of in accordance with SLOCHD and DTSC requirements. An appropriate verification closure letter from SLOCHD and DTSC shall be obtained and submitted to the County of San Luis Obispo Planning Department. Depending on the extent of contaminated soils, a verification closure letter from the California Regional Water Quality Control Board may also need to be submitted to the County of San Luis Obispo Planning Department. Site remediation can occur by the use of onsite transportable thermal treatment units or bio-remediation. The soil can also be excavated and shipped offsite to fixed incineration or bio-remediation facilities.

46. [Mitigation 5.7-B1] Prior to operation of the wastewater treatment system, a Hazardous Materials Management Plan shall be developed and submitted to the County of San Luis Obispo Environmental Health Services Division for approval. The plan shall identify hazardous materials utilized at the proposed wastewater facilities and their characteristics, storage, handling, training procedures, and spill contingency procedures. Additionally, the Hazardous Materials Management Plan shall identify procedures in the event of accidents such as the release of raw wastewater or secondary treated water into watercourses such as Los Osos Creek. These procedures shall include immediate response personnel to limit public access to spill areas, potentially shutting down pump stations, creating berms, use of vacuum trucks, and use of water booms to contain spills within open water areas. Furthermore, the Plan shall address response and containment of fuel at pump station sites.

47. [Mitigation 5.7-D1] To reduce the potential temporary loss of water for firefighting that may occur as a result of construction activities, the project shall compensate for the potential temporary loss of water through means determined by the County Fire Chief.

48. All contractors shall comply with relevant provisions of CAL-OSHA CAC Title 8 regarding the provision of safety and rescue equipment, to the satisfaction of the County Department of Public Works in consultation with the Planning Director.

Aesthetics

49. At the time of construction, walls, roofs, and other building components shall be constructed in colors and tones compatible with the surrounding environment. Landscaping that will either screen from in front or grow over from above any fencing shall be established prior to operation of the facility.

50. [Mitigation 5.12-D1] A final lighting plan shall be prepared for the treatment and disposal facilities in accordance with Estero Area Plan AES-5. The lighting plan shall meet County design standards. This shall include proper shielding, proper orientation, and applicable height standards. All lighting fixtures shall be shielded so that neither the lamp nor the related reflector interior surface is visible from adjacent properties or public areas. Light hoods shall be dark-colored. Lighting associated with all project components shall be the minimum needed for plant/pump station operations which require lighting for operations and/or during emergency situations.

51. [Mitigation 5.12-C3] Any buildings associated with collection facilities at the Broderson and Mid-Town parcels shall be designed in such a manner so they are architecturally compatible with other buildings in the vicinity.

52. [Mitigation 5.12-F1] Any building (equipment areas, pumping stations) associated with treatment and disposal facilities shall be designed to conform to an agricultural / rural landscape. Buildings shall be designed to appear as barns or other farm related structures.

53. Prior to construction, the applicant shall submit architectural elevations of all proposed structures to the Department of Planning for review and approval in consultation with the Environmental Coordinator. The elevations shall show exterior finish materials, colors, and height above the existing natural ground surface. Colors shall minimize the structure massing of new development by reducing the contrast between the proposed development and the surrounding environment. Colors shall be compatible with the natural colors of the surrounding environment, including vegetation, rock outcrops, sand dunes, etc. Darker or neutral, non-reflective, earth tone colors shall be selected for walls and buildings, and darker green, gray, slate blue, or brown colors for the roof structures.

54. [Mitigation 5.12-C1] Construction staging areas shall conform to Estero Area Plan AES-1 and be located away from sensitive viewing areas to the extent feasible. Before construction activities begin, an area of construction equipment storage away from direct views of sensitive viewing corridors (e.g. residences and major roads in the project area) shall be designated.

55. [Mitigation 5.12-C2] A final landscaping plan shall be prepared for the entire project site and approved by the County prior to commencement of construction activities. Said landscaping plan shall emphasize native plant materials and shall include sufficient planting to screen views of the project from nearby roads, public areas, and residential developments. The landscaping plan shall be designed to visually integrate the project into the rural landscape, while preserving and enhancing existing views.

Biological Resources

56. Prior to the intitiation of any vegetation clearing, soil disruption, grading, or any other construction related activities, the County shall formalize a "no take agreement" with the CDFG for the Morro Bay kangaroo rat. The "no take agreement' shall outline a monitoring and contingency plan for the Broderson leach field, as on-going maintenance of the leach field may create suitable Morro Bay kangaroo rat habitat.

57. Where construction will necessitate disturbance in undeveloped lots and other potentially sensitive areas, a pre-construction survey will be conducted to assess and minimize any potential impacts to sensitive resources in these areas.

58. [Mitigation 5.5-A9] The proposed project shall avoid Monarch butterfly winter roost habitats where feasible. If the proposed project will impact potential winter roost habitat, a qualified biologist with expertise in positively identifying the Monarch butterfly and winter roosting behavior shall conduct preconstruction surveys within all suitable habitat that occurs within the proposed impact area during the months of October through February. All potential roost sites that have a potential to be impacted as a result of construction activities shall be fenced and avoided. No construction activities shall be permitted in the vicinity (within 500 feet) of potential roost sites during the winter roosting months.

59. [Mitigation 5.5-A10] Prior to construction activities on the Broderson and Mid-town properties, a qualified biologist shall be retained to identify and demarcate all host silver dune lupine (*Lupinus chamissonis*) shrubs that occur within the impact area. The qualified biologist shall inspect each host lupine for the presence of any Morro blue butterfly eggs, larvae, or pupae. In an effort to avoid mortality of butterfly eggs, larvae, or pupae prior to the onset of adult emergence, any host lupine specimens determined to contain eggs, larvae, or pupae shall be considered for relocation outside of the impact area and within suitable coastal dune scrub habitat on either the Broderson or Mid-town properties. To avoid take of the Morro shoulderband snail (*Helminthoglypta walkeriana*) while conducting Morro blue butterfly survey activities, any person conducting such surveys shall be a qualified biologist knowledgeable in the general habitat requirements of the Morro shoulderband snail and familiar with the diagnostic features of all native and introduced snail species. Any planting and restoration efforts proposed as mitigation for the project shall include silver dune lupine within the plant palette to encourage the species to continue to use the area.

60. [Mitigation 5.5-A15] Prior to project construction, land containing coastal dune scrub and maritime chaparral habitat shall be acquired on the Broderson property that is sufficient to compensate the loss of habitat for the Morro shoulderband snail and other sensitive species on the Broderson and Mid-town properties, and sensitive areas in the collection system. Seventy-three acres of the Broderson property not used for the proposed leachfields shall be preserved in perpetuity and granted to an appropriate agency or conservation organization with the responsibility of management and monitoring the preserve as determined during agreements with USFWS, CDFG, and the County. A long-term management and monitoring program shall be prepared for the area to be preserved. The County shall be responsible for the allocation of appropriate funding for the long-term management and monitoring of the mitigation land. Such funding expense may be recouped through fees imposed upon wastewater system users and others.

61. [Mitigation 5.5-A16] Immediately following construction of the leachfields within the Broderson property, the disturbance area and all existing and unaffected coastal sage scrub (or coastal dune scrub) within the property shall be restored, enhanced, and maintained to promote the land's function and value as suitable habitat for sensitive plants and wildlife that are local or endemic to the area. Restoration and enhancement efforts, including at minimum, seeding with native plant species and eradication of exotic non-native plant species, shall be repeated immediately following all long-term maintenance activities resulting in temporary disturbance of the leachfields. This shall be applied to the ripping and backfilling activities that will be required every 5 to 10 years to maintain the leachfield function.

    Restoration activities shall be conducted according to a Restoration Plan or similar plan specifically prepared for the effort and approved by USFWS, CDFG, and/or the CNPS. The Restoration Plan shall require at minimum, a description of the prescribed restoration and methodology, feasibility and likelihood for success, and a schedule and program for maintenance, monitoring and reporting the progress of the restoration effort. All restoration activities shall be conducted by qualified personnel with expertise in restoration ecology and knowledge of sensitive plant and wildlife species in the area. The restoration effort shall include the implementation of a seed collection program to gather seeds to be used during restoration from native sources. The seed collection program shall be prepared for approval by the County prior to project construction activities. The seed collection program shall include the use of native plants that will be

removed as a result of the project, including but not limited to: mock heather (Ericameria ericoides), silver dune lupine (Lupinus chamissonis), California sagebrush (Artemisia californica), black sage (Salvia mellifera), bush monkey flower (Mimulus aurantiacus), and deerweed (Lotus scoparius). Collection shall take place by qualified personnel with expertise in botanical resources during the appropriate time of year for seed production and harvesting.

Unless otherwise determined during consultation with the USFWS, the restoration effort shall be monitored against performance standards for a minimum of five years, or until the first ripping event for the restored areas within the leachfield area, after which the maintenance and monitoring of the restored areas shall be covered within specific management directives contained within a Resource Management Plan. The performance standards shall include, at minimum, at least 80 percent native plant species coverage and no greater than 1 percent coverage of invasive non-native plant species (e.g. pampass grass, veldt grass). At minimum, the restored areas must demonstrate a continued ability to support the functions and values necessary to sustain the Morro shoulderband snail. Quarterly monitoring shall be conducted for the first two years of the restoration effort, with annual monitoring efforts to follow for the remaining three years. All monitoring and maintenance of restoration areas shall be conducted by qualified personnel with expertise in botanical resources and knowledge of sensitive species that occur in the local area, including the Morro shoulderband snail, Morro Bay kangaroo rat, and Morro blue butterfly.

The County shall provide annual reports to the USFWS documenting the results of all restoration and monitoring activities. Annual reports shall be provided to the USFWS for a minimum of five years or until it is determined by the USFWS that requisite performance criteria have been met. These reports should include any noted changes in the plant community structure or composition or surface hydrology down-slope of the Broderson leachfields, in addition to other requirements as determined through USFWS consultation and stipulated within permit conditions.

All on-going and long-term restoration, enhancement, and maintenance of preserved lands on the Broderson property shall be implemented according to a Resource Management Plan or similar mitigation and monitoring plan that may be developed during consultation with the USFWS. The Resource Management Plan shall include management directives that are specific to the preserve and the resources present. The Resource Management Plan shall include measures for the removal and eradication of invasive exotic plant species known to occur in the local area, including veldt grass and pampas grass. Activities that involve the removal of invasive species should not result in unnecessary trampling or removal of native species, and techniques for invasive removal shall be least damaging to native species.

62. [Mitigation 5.5-A1] The proposed project may affect federally-listed species (including Morro shoulderband snail and California red-legged frog) and as such, the EPA shall initiate formal consultation with USFWS pursuant to Section 7(a)(2) of the federal ESA. All mandatory terms and conditions, and reasonable and prudent measures pertaining to incidental take prescribed within the Biological Opinion and Nationwide Permit for the project the shall be fulfilled and implemented.

63. [Mitigation 5.5-A4] Prior to construction, a biologist authorized by the USWFS shall conduct intensive surveys to identify and relocate all Morro shoulderband snails within

the proposed impact area on the Broderson and Mid-town properties, and all suitable habitat areas within the proposed collection system. Only USFWS authorized biologists shall survey for, monitor, handle, or relocate Morro shoulderband snails.

A biologist authorized by the USFWS shall be retained to monitor all construction activities that will take place within suitable habitat for the Morro shoulderband snail. Monitoring activities shall be required daily until completion of initial disturbance at each construction area. The monitoring biologist shall be granted full authority to stop work at his or her discretion. The monitoring biologist shall be responsible for implementing avoidance and minimization measures during construction. The monitoring biologist shall stop work if project-related activities occur outside the demarcated boundaries of the construction footprint. The monitoring biologist shall stop work if any Morro shoulderband snails are detected within the proposed construction footprint, and shall implement measures to relocate them to suitable habitat out of harms way prior to construction activities resuming. If no suitable habitat opportunities are available in the immediate vicinity of the construction footprint, salvaged and relocated specimens may also be transported to an offsite location approved by the USFWS.

The County shall provide a written report to USFWS within 90 days following the completion of the proposed project. The report must document the number of Morro shoulderband snails removed and relocated from project areas, the locations of all Morro shoulderband snail relocations, and the number of Morro shoulderband snails known to be killed or injured. The report shall contain a brief discussion of any problems encountered in implementing minimization measures, results of biological surveys, observations, and any other pertinent information such as the acreages affected and restored, or undergoing restoration, of each habitat type.

64. [Mitigation 5.5-A8] Prior to project construction, the County shall retain a qualified biologist to conduct pre-construction surveys for the California red-legged frog according to protocol approved by the USFWS. Surveys shall be conducted within all areas that at are determined to contain suitable habitat for this species and that occur within 100 feet of proposed construction, or at a distance determined through USFWS consultation.

To avoid potential timing conflicts with the California red-legged frog breeding period, construction activities in the vicinity of California red-legged frog habitat shall be completed between April 1 and November 1. This measure shall apply to construction activities at the Los Osos Valley Road bridge and Los Osos Creek crossing, and all other areas determined during pre-construction surveys to contain suitable habitat for the species, including areas that occur within 100 feet of proposed construction, or at a distance determined through USFWS consultation.

Prior to construction, the County shall retain a USFWS-approved biologist to permanently remove any individuals of exotic species, such as bullfrogs, crayfish, and centrarchid fishes from the project area, to the maximum extent possible. The USFWS-approved biologist will be responsible for ensuring his or her activities are in compliance with the California Fish and Game Code.

Prior to construction, the County shall retain a USFWS–approved biologist to conduct a training session for all construction personnel. At a minimum, the training shall include a description of the California red-legged frog and its habitat, the importance of the California red-legged frog and its habitat, the general measures that are being

implemented to conserve the California red-legged frog as they relate to the project, and the boundaries within which the project may be accomplished.

Prior to construction, the County shall retain a USFWS-approved biologist responsible for monitoring construction activities. Ground disturbance shall not be authorized to begin until written approval is received from the USFWS that the biologist is qualified to conduct the work. Only USFWS-approved biologists will participate in activities associated with the capture, handling, and monitoring of California red-legged frog. To ensure that diseases are not conveyed between work sites by the USFWS-approved biologist, the fieldwork code of practice developed by the Declining Amphibian Populations Task Force shall be followed at all times. A USFWS-approved biologist shall be present at the active work sites until such time that the initial survey for California red-legged frogs, instruction of workers, and (upland) habitat disturbance have been completed. After this time, the contractor or County shall designate a qualified person to monitor on-site compliance with all minimization measures. The USFWS-approved biologist shall ensure that this individual receives appropriate training as to the identification of frogs, potential hazards to the species, inappropriate and allowable work activities, and appropriate contacts for immediate, professional biological support. During work activities, all trash that may attract predators shall be properly contained, removed from the work site and disposed of regularly. Following construction, all trash and construction debris shall be removed from work areas.

All fueling and maintenance of vehicles and other equipment and staging areas shall occur a minimum of 100 feet from all open water, stream, wetland, and riparian habitat. The County shall ensure that contamination of habitat does not occur during such operations. Prior to the onset of work, the EPA shall ensure that the County has prepared a plan to allow a prompt and effective response to any accidental spills. A copy of this plan shall be provided to the Department of Planning and Building. Wet weather storage ponds shall be maintained as to not attract bullfrogs. This will include allowing the ponds to go dry during the summer to disrupt any breeding activity by bullfrogs. The County shall monitor wet weather storage ponds for bullfrog activity.

65. [Mitigation 5.5-A13] Prior to project construction and within all areas on the Broderson property that contain suitable habitat for the Monterey spineflower, a qualified biologist shall be retained to conduct botanical surveys for Monterey spineflower presence. Surveys shall be conducted during the local blooming period for the species, which typically occurs between April and June, and according to recommendations and guidelines prepared by the USFWS, CDFG, and CNPS. If positively identified, all specimens shall be clearly demarcated with flagging, and avoided to the maximum extent feasible during construction. A qualified monitoring biologist shall be retained to monitor all construction activities in the immediate vicinity (within 25 feet) of any flagged specimens that will not be removed as a result of construction activities. If specimens are positively identified within the leachfield impact area, the seeds of those specimens shall be collected and sown within suitable habitat located outside of the leachfield impact area and within the Broderson property.

The County shall provide a written report to USFWS within 90 days following the completion of the project. The report shall document the number of Monterey spineflower specimens removed from project areas, the locations of areas seeded with Monterey spineflower seeds, and the number of Monterey spineflower specimens found to be dead or damaged as a result of construction activities. The report shall contain a

brief discussion of any problems encountered in implementing minimization measures, results of biological surveys, observations, and any other pertinent information such as the acreages affected and restored, or undergoing restoration, of each habitat type.

66. [Mitigation 5.5-A14] The proposed project shall minimize to the maximum extent feasible any potential impacts to non-listed plant and lichen species designated as sensitive by the CNPS, including Blochman leafy daisy, saint's daisy, San Luis Obispo wallflower, curly-leafed monardella, dune almond, spiraled old man's beard, Los Osos black and white lichen, long-fringed parmotrema, and splitting yarn lichen. The County shall retain a qualified biologist to conduct botanical surveys within suitable habitat on the Broderson and Mid-town properties to identify all sensitive plant and lichen species within and in the immediate vicinity of the impact areas. Surveys shall be conducted during the local blooming periods for each species, where applicable, and according to recommendations and guidelines prepared by the USFWS, CDFG, and CNPS. All specimens shall be clearly demarcated with flagging and avoided to the maximum extent feasible during construction.

67. [Mitigation 5.5-A5] Prior to construction, the County shall formalize a "no take agreement" with the CDFG for the Morro Bay kangaroo rat. The "no take agreement' shall outline a monitoring and contingency plan for the Broderson leachfield, as on-going maintenance of the leachfield may create suitable Morro Bay kangaroo rat habitat.

68. [Mitigation 5.5-A3] A worker education program and clearly defined operations procedures shall be prepared prior to project construction. The worker education program and operations procedures shall be implemented by the County throughout the duration of construction. A biologist approved by the USFWS shall be retained to provide construction personnel specific instruction on general detection and avoidance of sensitive resources during construction. The worker education program shall include: descriptions and pictures of listed species; the provisions of the Endangered Species Act; those specific measures being implemented to avoid and minimize take or impacts to listed or otherwise sensitive species (e.g._conserve listed and sensitive species as they relate to the project); and the project boundaries within which the work will occur.

69. [Mitigation 5.5-A11] If any construction activities are proposed during the general bird breeding season (February 1 through August 31), a pre-construction survey shall be conducted by a qualified biologist within 10 calendar days prior to the onset of construction activities to identity any active non-raptor bird nests within 250 feet of the proposed impact area. If an active nest is identified during the pre-construction survey, a minimum no-disturbance buffer of 250 feet shall be delineated around active nests until the breeding season has ended or until a qualified biologist has determined that the birds have fledged and are no longer reliant upon the nest or parental care for survival. Fore sensitive species, including Allen's hummingbird, yellow warbler, and loggerhead shrike, the distance and placement of the construction avoidance shall be a minimum of 250 feet unless otherwise determine through consultation with the CDFG.

70. [Mitigation 5.5-A12] If any construction activities are proposed during the general raptor breeding season (February 1 through August 31), a pre-construction survey shall be conducted by a qualified biologist within 10 calendar days prior to onset of construction to identify any active raptor nests within 500 feet of the proposed impact area. If an active raptor nest is identified during the pre-construction survey, a minimum no-disturbance buffer of 500 feet shall be delineated around active nests until the breeding

season has ended or until a qualified biologist has determined that the birds have fledged and are no longer reliant upon the nest or parental care for survival.

Pursuant to Section 2050 of the CFG Code, the CDFG will not permit any impacts to the California state fully protected white-tailed kite. If an active nest or breeding territory is detected during preconstruction surveys for nesting birds, no construction activities shall take place within 500 feet of the location of the active nest. The area shall be completely avoided and fenced to allow for an adequate buffer from construction activities. A qualified biologist shall be retained to monitor the activity of the nest during the breeding season until it is determined that the nest is no longer active (i.e., all young have fledged the nest and there are no individual kites that are dependent on the nest).

During Construction

71. [Mitigation 5.6-D1] A draft Memorandum of Agreement has been prepared for the treatment and disposition of human remains and associated burial items. This document lays out the procedures agreed upon by interested local Native Americans and stipulated under State law, including proper and respectful handling of remains, identification of reburial areas, acceptable analyses, and resolution of conflicts. It includes a list of Most Likely Descendents approved by the Native American Heritage Commission; these individuals are signatories on the Agreement.

72. [Mitigation 5.6-D2] For sites with known human remains or which have a potential for human remains, pre-construction excavations shall take place within the direct impact areas to insure that no human remains are present.

73. [Mitigation 5.6-D3] If human remains are encountered within the project area, the County shall be responsible for complying with provisions of Public Resources Code Sections 5097.98 and 5097.99, and 7050.5 of the California Health and Safety Code, as amended by Assembly Bill 2641. Restrictions or procedures for excavation, treatment, or handling of human remains shall be established in consultation with the individuals designated by the Native American Heritage Commission as the Most Likely Descendents.

74. [Mitigation 5.6-C1] Although unlikely, should any vertebrate fossils or potentially significant finds (e.g., numerous well-preserved invertebrate or plant fossils) be encountered by anyone working on the site, all activities in the immediate vicinity of the find are to cease until a qualified paleontologist evaluates the find for its scientific value. If deemed significant, the paleontological resource(s) shall be salvaged and deposited in an accredited and permanent scientific institution where they will be properly curated and preserved for the benefit of current and future generations.

75. [Mitigation 5.9-C2] Prior to initiating grading activities, the proponent's contractor or engineer shall:

    a. Include the following specifications on all project plans: One catalyzed diesel particulate filter (CDPF) shall be used on the piece of equipment estimated to generate the greatest emissions. If a CDPF is unsuitable for the potential equipment to be controlled, five diesel oxidation catalysts (DOC) shall be used.

    b. Identify equipment to be operated during construction as early as possible in order to place the order for the appropriate filter and avoid any project delays.

This is necessary so that contractors bidding on the project can include the purchase, proper installation, and maintenance costs in their bids.

c. Contact the SLOAPCD Compliance Division to initiate implementation of this mitigation measure at least two months prior to start of construction.

76. [Mitigation 5.9-C4] Project contract documents would include the following dust control measures:

a. Reduce the amount of the disturbed area where possible,

b. Use water trucks or sprinkler systems in sufficient quantities to prevent airborne dust from leaving the site. Increased watering frequency will be required whenever wind speeds exceed 15 mph. Reclaimed (non-potable) water should be used whenever possible.

c. All dirt stockpile areas will be sprayed daily as needed,

d. Permanent dust control measures identified in the revegetation and landscape plans will be implemented as soon as possible following completion of any soil disturbing activities.

e. Exposed ground areas that are planned to be reworked at dates greater than one month after initial grading will be sown with a fast germinating native grass seed and watered until vegetation is established.

f. All disturbed soil areas not subject to revegetation will be stabilized using approved chemical soil binders, jute netting, or other methods approved in advance by the APCD. Any erosion and sedimentation control netting or other erosion and sedimentation control devises used for temporary or permanent erosion and sedimentation control, shall be limited to biodegradable mesh or other biodegradable products.

g. All roadways, driveways, sidewalks, etc. to be paved will be completed as soon as possible. In addition, building pads will be laid as soon as possible after grading unless seeding or soil binders are used.

h. Vehicle speed for all construction vehicles will not exceed 15 mph on any unpaved surface at the construction site.

i. All trucks hauling dirt, sand, soil, or other loose materials are to be covered or will maintain at least two feet of freeboard (minimum vertical distance between top of load and top of trailer) in accordance with CVC Section 23114.

j. Install wheel washers where vehicles enter and exit unpaved roads onto streets, or wash off trucks and equipment leaving the site.

k. Sweep streets at the end of each day if visible soil material is carried onto adjacent paved roads. Water sweepers with reclaimed water should be used where feasible.

l. If visible emissions of fugitive dust persist beyond a distance of 200 feet from the boundary of the construction site, all feasible measures shall be implemented to eliminate potential nuisance conditions at off-site receptors (e.g., increase frequency of watering or dust suppression, install temporary wind breaks where appropriate, suspend excavation and grading activity when winds exceed 25 mph).

m. The contractor will designate a person or persons to monitor the dust control program and to order increased watering, as necessary, to prevent transport of dust offsite. Their duties will include holidays and weekend periods when work may not be in progress. The name and telephone number of such persons will be provided to the SLOAPCD prior to the start of construction.

77. [Mitigation 5.9-C5] If the above mitigation measures do not bring the construction emissions below the thresholds, off-site mitigation funds can be used to secure emission reductions from projects located in close proximity to this construction site. In this instance, emissions in excess of construction phase thresholds are multiplied by the cost effectiveness value defined in the State's current Carl Moyer Incentive Program Guidelines to determine the off-site mitigation amount associated with the construction period. Examples of off-site emission reduction measures are contained in Section 5.9 of the 2003 CEQA Air Quality Handbook. The actual mix of mitigation measures that would be required to meet the reduction in NOX to less than a total of 185 lbs per day or 6.0 tons per quarter over the term of construction and would be finalized and mutually agreed to by the Applicant and appropriate staff of the SLOAPCD prior to commencement of construction of the project.

78. [Mitigation 5.10-C1] The project applicant shall require construction contractors to adhere to the following noise attenuation requirements:

a. A construction noise control plan shall be developed for the project that identifies the nature and timing of operations designed to minimize noise exposure to noise sensitive receptors including natural resource areas.

b. Generally, construction activities shall be limited to between the hours of 7 a.m. to 9 p.m. on any day except Saturday or Sunday or between the hours of 8 a.m. to 5 p.m. on Saturday or Sunday.

c. Construction activities in the vicinity of schools should be scheduled for times when classes are not in session.

d. All construction equipment shall use noise-reduction features (e.g., mufflers and engine shrouds) that are no less effective than those originally installed by the manufacturer.

e. The noise produced by construction activities shall be monitored to insure that the noise produced by construction equipment is compliant with the emission standards listed in the project EIR (Appendix L, page 5.10-4 and in source document, FHWA Construction Noise Model, page 3).

f. Measures to minimize back-up alarm issues shall be established including such techniques as: 1) use of self-adjusting ambient sensitive back-up alarms, 2)

manual adjustable alarms on lower settings, 3) use of observers, 4) scheduling of activities so that alarm noise is minimized, and 5) construction site access designed such that deliveries and trucks move through the site in a forward manner without the need to back up.

g. Construction staging and heavy equipment maintenance activities shall be performed a minimum distance of 300 feet from the nearest residence, unless safety or technical factors take precedence.

h. Stationary combustion equipment such as pumps or generators operating near any noise sensitive receptor shall, if necessary, be shielded with a noise protection barrier. Leq values at the property line of receiver locations shall not exceed 65 dB.

79. [Mitigation 5.10-C2] The construction contractor shall notify all property owners and tenants adjacent to the proposed pile driving activities of the days and hours of operation. The construction contractor shall also require that a noise damper be utilized between the pile driver and the object that is being driven into the ground.

80. [Mitigation 5.10-B1] Prior to initiation of construction of the collection system, the contractor/designer shall identify all areas where pile driving, or other construction methods that would result in severe ground vibrations, could occur. Deep pile foundation designs shall favor techniques that can be constructed with minimal vibration effects. Prior to construction, using technology and standards recommended in the Caltrans Transportation and Construction Induced Vibration Manual, the contractor shall calculate the vibration effects of pile driving and other high vibration activities using the Peak Particle Velocity (PPV) metric, and shall ensure that the PPV does not exceed the following thresholds at any affected building: 0.5 at modern industrial/commercial or residential buildings; 0.3 for any building composed of masonry, unreinforced concrete, lath & plaster interiors or of similar construction; and 0.25 for any building identified as particularly sensitive to vibration impacts. Alternative design and/or construction methods shall be used to meet these limits. In addition, the construction contractor shall notify all property owners and tenants adjacent to the proposed pile driving or other vibration inducing activities of the days and hours of operation. Prior to construction activities associated with this type of work, the construction contractor shall inspect all structures within the area predicted to experience vibration in excess of 0.25 PPV to document existing characteristics of the structures. During construction, vibration shall be monitored and recorded and adjustments made to operation or to the radius of concern if the level of vibration differs from estimates. If a post construction survey indicates that damages to structures (e.g., residences, pools) occurred during the work, the property owner shall be fairly compensated for the cost of remediating damages.

81. Control Introduction of Invasive Exotic Plants. To control introduction of invasive exotic plants on site, implement the following measures during construction and incorporate into the design guidelines of the proposed percolation fields, as appropriate.

a. Use only clean fill material (free of weed seeds) within the construction zone of the proposed project.

b. Thoroughly clean all construction equipment prior to being moved onto and used at the site.

c. Prohibit planting or seeding of disturbed areas with nonnative plant species;

d. Control the establishment of invasive exotic weeds in all disturbed areas. Remove existing stands of invasive exotic plants, including but not limited to veldt grass, pampas grass and ice plants, in order to limit their spread.

82. [Mitigation 5.5-A6] All construction activities across Los Osos Creek shall be restricted to low-flow periods of June 15 through November 1. If the channel is dry, construction can occur as early as June 1. Restricting construction activities to this work window will minimize impacts to migrating adult and smolt steelhead, if present.

Prior to construction, the County shall retain a qualified biological monitor to be on site during all stream crossing activities associated with Los Osos Creek. The biological monitor will be authorized to halt construction if impacts to steelhead are evident. Prior to construction, a spill prevention plan for potentially hazardous materials shall be prepared and implemented. The plan shall include the proper handling and storage of all potentially hazardous materials, as well as the proper procedures for cleaning up and reporting of any spills. If necessary, containment berms shall be constructed to prevent spilled materials from reaching the creek channel.

Prior to construction, silt fencing shall be installed in all areas where construction occurs within 100 feet of known or potential steelhead habitat. All silt fencing, erosion control and landscaping specifications shall only include natural-fiber, biodegradable products for meshes and coir rolls to minimize impacts to species and the environment during use.

During construction, spoil sites shall be restricted to upland locations so they do not drain directly into Los Osos Creek. If a spoil site drains into a water body, catch basins shall be constructed to intercept sediment before it reaches the channels. If required, spoil sites shall be graded to reduce the potential for erosion.

During construction, equipment and materials shall be stored at least 50 feet from Los Osos Creek. No debris such as trash and spoils shall be deposited within 100 feet of waterways. Staging and storage areas for equipment, materials, fuels, lubricants and solvents, shall be restricted to locations outside of the stream channel and banks. Stationary equipment such as motors, pumps, generators, compressors and welders, located within or adjacent to the stream shall be positioned over drip pans at all times. Any equipment or vehicles driven and/or operated within or adjacent to the stream shall be checked and maintained daily to prevent leaks of materials that if introduced to water could be deleterious to aquatic life. Vehicles shall be moved away from the stream prior to refueling and lubrication.

During construction, proper and timely maintenance for all vehicles and equipment used shall be provided to reduce the potential for mechanical breakdowns leading to a spill of materials into or around the creek. Maintenance and fueling shall be restricted to safe areas away from Los Osos Creek that meet the criteria set forth in the spill prevention plan.

Immediately following construction, all construction work areas shall be restored to pre-construction channel conditions, including streambed composition, compaction, and

gradient. If required, channel banks shall be returned to original grade slope and appropriate bank stabilization techniques shall be implemented to reduce the potential for erosion and sedimentation. A plan describing pre-project conditions and restoration methods shall be prepared prior to construction.

Immediately following construction, all appropriate construction work areas will be revegetated with an appropriate assemblage of native upland vegetation, and if necessary, riparian vegetation, suitable for the area. A plan describing pre-project conditions, restoration and monitoring success criteria shall be prepared prior to construction.

83. [Mitigation 5.5-A7] Implementation of trenchless technologies shall be considered as a feasible option for the installation of conveyance pipelines within and adjacent to areas containing wetlands, streams, and riparian vegetation. Trenchless technologies that are feasible for all Proposed Projects include microtunneling and horizontal directional drilling (HDD) within all areas along the proposed conveyance routes, and pipe suspension at areas supporting existing bridge crossings along the proposed conveyance routes (at the Los Osos Creek crossing).

    Microtunneling and HDD entrance and exit locations shall be set back as far away from wetlands, streams, and riparian vegetation as feasible and consistent with the setback requirements of the CZLUO and Estero Area Plan. Implementation of microtunneling and HDD methodologies shall incorporate a frac-out contingency plan and all relevant Best Management Practices during construction.

    Maintenance activities associated with pipe suspension that may result in activity within the streambed of Los Osos Creek shall be restricted to periods when the streambed is dry and does not support any flowing water or pooling water in the proposed maintenance area.

Post Construction

84. Prior to operation of the wastewater treatment system, the applicant shall:

    a) Obtain final inspection approval of all required fire/life safety measures.

    b) Prior to operation of the wastewater treatment system, all Public Works Encroachment permit provisions shall be completed to the satisfaction of the Department.

85. Rehabilitation of disposal percolation fields shall be rotated so that no more than one field is under re-construction at a time.

86. Consistent with condition of approval # 34 is for Coastal Development Permit (CDP A-3-SLO-03-113 / D020283).To prevent the wastewater treatment system from inducing growth that cannot be safely sustained by available water supplies, the sewer authority is prohibited from providing service to existing undeveloped parcels within the service area, unless and until the Estero Area Plan is amended to incorporate a sustainable buildout target that indicates that there is water available to support such development without impacts to wetlands and habitats.

87. Concurrent with the operation of the facility, the County shall implement the Groundwater Level Monitoring and Management Plan that details methods for measuring and responding to changes in groundwater levels that could affect wetland hydrology and habitat values. The Plan includes provisions for monitoring groundwater levels, surveys for wetland plant and animals, monitoring wetland hydrology and water quality, appropriate response procedures should impacts be identified, annual reporting, and an education program to encourage property owners to convert septic systems into areas capable of groundwater recharge.

88. In order to maintain existing levels of groundwater recharge and protect coastal water quality, the County shall evaluate and, where appropriate, assist property owners in the implementation of opportunities to re-use existing septic tank effluent disposal systems (e.g., leach fields) to filter and percolate stormwater runoff. Prior to the connection of individual properties the County shall, at the consent of the landowner, evaluate whether existing on site wastewater disposal facilities have adequate capacity and depth to groundwater to accommodate and percolate stormwater runoff, and if so, provide site-specific recommendations on how to connect such a system.

89. The Los Osos wastewater project (including collection, treatment and disposal) shall be operated in a manner that prevents the emission of nuisance odors that are perceptible at or beyond the property lines of the project site, consistent with the requirements of Health and Safety Code Section 41700. Nuisance odors, problems with the operation of the wastewater treatment plant or dust complaints shall be directed to the operators of the wastewater treatment plant. The San Luis Obispo County Air Pollution Control District (SLOAPCD) will also respond to complaints and communicate immediately with the operators of the wastewater treatment plant. All complaints, breakdowns, or parameter exceedence shall be reported to the SLOAPCD within four (4) hours of receipt or event.

90. **Condition eliminated**

91. Screen Planting - Trees and shrubs shall be planted along the perimeter of the wastewater treatment facility prior to facility operation or at the earliest time feasible after completion grading activities. To provide effective screening, the size and variety of evergreen trees shall be planted which will reach a minimum height of 25 feet within five years. Large shrubs shall be included to provide lower height screening. Italian Cypress and other distinctly-shaped non-native plants shall not be used. The screen planting shall be designed to appear as a naturally appearing swath of vegetation. Evidence shall be submitted to the Department of Planning and Building to show that 75% screening has been achieved within 5 years. Landscape must be maintained to provide the required or better screening in perpetuity.

92. Prior to providing wastewater treatment service to undeveloped parcels, the County, in coordination with the California Department of Fish and Game (CDFG), the US Fish and Wildlife Service (USF&WS), San Luis Obispo County and the California Coastal Commission shall prepare and implement a Habitat Conservation Plan (HCP) for the long-term preservation of habitat remaining within the Los Osos Greenbelt, including habitat remaining on individual vacant lots. The HCP shall:

    a. identify the habitat resources and the quality of those resources on the remaining vacant properties within the South Bay Urban Area and Los Osos Greenbelt;

b. specify measures to avoid and minimize impacts to ESHA from buildout of the Service area, and to mitigate unavoidable impacts through acquisition, protection, and/or restoration of equivalent habitat within the planning area; and

c. implement such measures through an amendment to the Estero Area Plan that integrates the HCP, as approved by the US Fish and Wildlife Service and Department and Fish and Game, with LCP standards for development in the South Bay Urban Area. This LCP amendment must become fully effective, and all permits required by state and federal Endangered Species Acts shall be issued, before County makes any final commitment to provide wastewater treatment service to undeveloped properties.

The range of potential conservation programs to be considered in the HCP shall include, but not be limited to the following:

a. New development programs and standards that maximize preservation of sensitive biological resources in the Los Osos area, such as:

i. Transfer of development credits
ii. Clustering
iii. Avoidance of sensitive resources in site design
iv. Changes in density and land use
v. Incorporation of open space into the design of new development

b. Programs aimed at facilitating coordination among agencies and organizations involved in management and conservation/preservation of sensitive resources, including USF&WS, CDFG, California Coastal Commission, San Luis Obispo County, MBNEP, Land Conservancy of San Luis Obispo County, and others;

c. The creation of a land bank program to facilitate the purchase of properties with high quality habitat within the Greenbelt, to be repaid over time from fees on new building permits; and

d. Programs for the acquisition of properties within the Greenbelt that contain significant habitat resources.

The County may apply for amendment to this permit condition at, or prior to the time that the treatment plant is operational, to authorize the County to issue Will Serve letters to properties that would otherwise qualify.

93. **Condition eliminated**

94. Installation of lateral lines will conform to the mitigation procedures contained in the "Lateral Line Installation — Biological Resources & Mitigation" report dated 10-16-02.

95. [Mitigation 5.11-A1] Prior to operation of the wastewater treatment system, the County Department of Public Works shall provide evidence to the County Planning and Building Department that a farmland conservation easement, a farmland deed restriction, or other farmland conservation mechanism burdening an off-site agricultural mitigation parcel has

been granted in perpetuity to the County or a qualifying entity approved by the County Agricultural Commissioner (or designee). The easement shall provide conservation acreage at a ratio of not less than 2:1 for the loss of agricultural land. Additionally, the project proponent shall provide appropriate funds (as determined by the County Planning Department) to compensate for reasonable administrative costs incurred by the easement holder. The area conserved shall be at least 32 acres (to offset direct impacts from the treatment plant facility), and shall be of a quality that is reasonably (as determined by the County Agricultural Commissioner or designee) similar to that of the farmland within the project limits. The area to be conserved shall be located within San Luis Obispo County within reasonable proximity to the project site.

96. Site Management Plan. Prior to operation of the facility, the County, in consultation with resource agencies, will develop a Site Management Plan for the remainder of the new public lot to be created out of the Giacomazzi property. The Site Management Plan will provide for the continued operation of agricultural activities on those portions of the property not used for the project and/or associated mitigation consistent with the affirmative agricultural easement requirements described herein. Implementation of the Plan will ensure that uses or land stewardship practices do not impede adjacent agricultural uses and practices and may include, but not be limited to:

    (a) Maintenance of fences sufficient to clearly delineate property lines, contain livestock, prevent trespass, and manage non-native invasive species.

    (b) Prevention and management actions to avoid the proliferation of weeds and noxious plants that are incompatible with adjacent agricultural practices.

    (c) Management of all on-site water features, including springs, streams, and ponds in a manner that does not result in erosion or sedimentation impacts on downstream properties.

    The Site management will be reviewed and approved by the Director of Planning and Building in consultation with the Agricultural Commissioner prior to implementation.

97. Disposal of treated effluent shall be reserved for the following sites/uses in the Los Osos Groundwater Basin:

    a. Broderson (not to exceed 448 AFY on an average annual basis),
    b. Urban re-use within the urban reserve line (as identified in the Effluent Re-Use and Disposal Tech Memo, July 2008),
    c. Agricultural re-use overlying the Los Osos Groundwater Basin,
    d. Environmental reservations (not less than 10% of the total volume of treated effluent).

    Total agricultural re-use shall not be less than 10% of the total treated effluent. Disposal shall be prioritized to reduce seawater intrusion and return/retain water to/in the Los Osos groundwater basin. Highest priority shall be given to replacing potable water uses with tertiary treated effluent consistent with Water Code Section 13550.

No amount of treated effluent may be used to satisfy or offset water needs that result from non-agricultural development outside the Urban Reserve Line of the community of Los Osos.

98. Where the collection system pipes will be located in areas of high groundwater, or areas subject to future 5 foot sea level rise, as shown on the June 29 and 30, 2009 PC Memo – page: 1-16 (see Attachment 3), and as identified in the field during construction; the applicant shall utilize fusion welded pipes or chemically sealed pipes. In areas of high groundwater, additional inspections to ensure proper installation shall be completed prior to backfilling the trenches. All laterals to individual residences shall utilize fusion welded pipes or chemically sealed pipes. Lateral connections at the property line shall utilize fusion welded pipes, chemically sealed pipes, or collars.

99. Within one year of adoption of a due diligence resolution by the Board of Supervisors, electing to proceed with a wastewater project, a water conservation program shall be developed by the applicant in consultation with the local water purveyors within the prohibition zone for the community of Los Osos, that meets the goal of 50 gallons per day / per person for indoor use. The applicant shall provide 5 (five) million dollars of funding towards a water conservation program for indoor water conservation. Incentives shall be provided to homeowners and other property owners who install conservation measures within the first year.

100. Prior to operation of the wastewater treatment system, the applicant shall provide a new on-site well for facility operations in accordance with California Well Standards and County Ordinances and to the satisfaction of the Environmental Health Department.

101. The applicant shall utilize the existing Bayridge leach field (APN 074-491-033) to dispose of approximately 33 acre feet per year of treated effluent upon decommissioning of the existing leach field and connection to the community sewer system. The applicant shall consult with the Los Osos Community Services District (LOCSD) prior to the design phase of the project regarding use of said facilities to ensure all their concerns are addressed.

102. The applicant shall design the layout of the proposed sewer treatment facility to allow for structures to have roofs with "due south orientation" to maximize solar orientation for future solar photovoltaic and / or solar water panel installation, as feasible. No evergreen trees (with mature heights over 12 feet) shall be planted near structure that could potentially block the sun to these portions of the roofs unless necessary for visual screening. This shall be reflected in any landscape plans prepared / required. As a part of roof design / construction, these portions of the roofs shall be designed to be able to handle the "dead" loads associated with the weight of these panels. To further maximize solar efficiency, where possible, roof pitch of this portion of roof shall be as close to 20 degrees as practical. The applicant shall provide verification to the satisfaction of the County Planning and Building Department that the above measures have been incorporated into the project.

103. Prior to individual property connections to the waste water system, each property owner shall provide verification to the satisfaction of the Planning Director that all toilets, showerheads and faucets have been replaced with high efficiency versions of the same.

104. Agriculture irrigation lines and other wastewater effluent disposal lines shall be located within existing right-of-ways (including agricultural field access ways) and other areas known to not include, or that can be demonstrated to not include, cultural or biological resources. Use of the effluent shall be consistent with all other local, State, and Federal regulatory requirements including but not limited to the Conditional Waiver of Waste Discharge Requirements for Discharges from Irrigated Lands requirement of the Central Coast Regional Water Quality Control Board.

105. Bio-solids shall be disposed of at the closest approved facility within the San Luis Obispo County region. The San Luis Obispo County region shall be limited to the northern San Luis Obispo county line and south to the Santa Maria area within Santa Barbara County. If an approved facility is not available within the San Luis Obispo County region at the time of project start-up, then the closest approved facility shall be utilized. If an approved facility becomes available for disposal of bio-solids within the San Luis Obispo County region, that facility shall be utilized for disposal of bio-solids.

106. If the County acquires more land area than is necessary to site the treatment facility and appurtenant facilities, then prior to transferring title of the surplus area, the County shall record an affirmative agricultural easement over such surplus land. This easement shall take into consideration biological, cultural, sedimentation and erosion constraints on the project site. Agricultural activities chosen to take place on the remainder of the wastewater treatment facility site shall be consistent with the long term protection of the identified resources.

107. The applicant shall apply for and record a public lot prior to commencement of construction activities at the wastewater treatment site.

108. Prior to individual property connections to the wastewater treatment project, each property owner shall provide verification to the satisfaction of the Public Works Department (in consultation with the Planning Director) that a water meter meeting American Water Works Association (AWWA) standards, and approved by the water company serving the individual property, has been installed or is existing on the connection site. A water meter shall be installed on each legally established residential / commercial unit prior to connection to the wastewater treatment project. Water usage information shall be made available to the sewer authority on a quarterly basis or on a schedule agreed to by the water purveyors and the County to verify the water savings derived from the water conservation program.

109. Prior to commencing construction activities at the Giacomazzi site, the applicant shall submit to the Department of Public Works for review and approval a Roadway Safety Analysis (RSA) for the intersection of the treatment plant access road with Los Osos Valley Road. The RSA shall be prepared by a registered civil engineer with expertise in transportation design and familiarity with the Los Osos Valley Road corridor, and shall include but not be limited to the following:

a) Evaluate the proximity of the cemetery access road with the project access road and discuss corrective options including realignment, road mergers (sharing) and alternative project access road locations;

b) Analyze the project access road sight distance with respect to Los Osos Valley Road and recommend improvements, if required;

c) Analyze Los Osos Valley Road left turn lane warrants and traffic queuing at the project access road and recommend improvements, if required;

d) Evaluate Los Osos Valley Road traffic safety a minimum of 1-mile either side of the treatment plant access road and provide recommendations for improvements, if required;

e) Evaluate erosion control measures such as gravel pads, rumble strips and wheel washers to avoid the tracking of dirt and sediment onto adjacent private and public roadways during construction, and recommend best management practices to be implement; and

f) Evaluate onsite circulation with specific emphasis on truck maneuvering, access for emergency vehicles, onsite parking, and all-weather roadbed materials, provide recommendations and an implementation plan.

All RSA recommendations shall be implemented prior to commencing construction activities.

110. The aboveground facilities for the mid-town pump station shall be re-located to Palisades Avenue (south of the Library) on APN 074-229-017.

111. Routine flushing of sewer system lines shall utilize recycled water. In the event of an emergency situation, potable water may be used to flush the sewer system if non-potable water is determined to be infeasible.

Responsibility Matrix - Special Conditions
Coastal Development Permit: CAP-A-3-SOL-09-055/069
Los Osos Water Recycling Facility
San Luis Obispo County

Special Conditions		Responsible Party		
		County	LOWRF D/B Team[1]	N/A
1	a		X	
	b		X	
	c		X	
	d			X
	e			X
	f			X
	g		X	
	h		X	
	I		X	
	j		X	
	k			X
	l		X	
2		X		
3		X		
4		X		
5		X		
6		X		
7		X		
8		X		
9		X		

Notes:
(1) LOWRF D/B Team will be responsible for satisfying the indicated special conditions of the Coastal Development Permit as they pertain to design and construction of the Water Recycling Facility.

Responsibility Matrix - Condition of Approval
Coastal Development Permit: CAP-A-3-SOL-09-055/069
Los Osos Water Recycling Facility
San Luis Obispo County

Condition of Approval		Responsible Party		
		County	LOWRF D/B Team[1]	N/A
Approved Development				
1	a		X	
	b			X
	c		X	
	d			X
	e		X	
	f			X
	g		X	
	h	X		
	i			X
	j			X
	k	X		
2			X	
3				X
4				X
5		X		
6			X	
Prior to Construction - Permits				
7		X		
8		X		
9		X		
10			X	
11			X	
12			X	
13			X	
14			X	
Prior to Construction - Facility Design				
15	a		X	
	b			X
16			X	
17			X	
18			X	
Prior to Construction - Geologic Hazards				
19			X	
20			X	
21			X	
22			X	
23			X	

Responsibility Matrix - Condition of Approval
Coastal Development Permit: CAP-A-3-SOL-09-055/069
Los Osos Water Recycling Facility
San Luis Obispo County

Condition of Approval	Responsible Party		
	County	LOWRF D/B Team[1]	N/A
24		X	
25			X
26		X	
27		X	
Prior to Construction - Cultural Resources			
28		X	
29	X		
30	X		
31	X		
Prior to Construction - Traffic			
32			X
Prior to Construction - Access			
33		X	
34	X		
Prior to Construction - Air Quality			
35		X	
36		X	
37	X		
38		X	
39	X		
40		X	
Prior to Construction - Noise			
41		X	
42		X	
43		X	
44			X
45		X	
46		X	
47			X
48		X	
Prior to Construction - Aesthetics			
49		X	
50		X	
51			X
52		X	
53		X	
54		X	
55		X	

Responsibility Matrix - Condition of Approval
Coastal Development Permit: CAP-A-3-SOL-09-055/069
Los Osos Water Recycling Facility
San Luis Obispo County

Condition of Approval		Responsible Party		
		County	LOWRF D/B Team[1]	N/A
Prior to Construction - Biological Resources				
56		X		
57			X	
58		X		
59				X
60				X
61				X
62		X		
63		X		
64		X		
65				X
66		X		
67		X		
68			X[2]	
69		X		
70		X		
During Construction				
71			X	
72				X
73		X		
74			X	
75				
76			X	
77			X	
78			X	
79			X	
80				X
81			X	
82				X
83				X
Post Construction				
84	a		X	
	b	X		
85		X		
86		X		
87		X		
88		X		
89			X	

Responsibility Matrix - Condition of Approval
Coastal Development Permit: CAP-A-3-SOL-09-055/069
Los Osos Water Recycling Facility
San Luis Obispo County

Condition of Approval	Responsible Party		
	County	LOWRF D/B Team[1]	N/A
90			X
91		X	
92	X		
93			X
94			X
95	X		
96	X		
97	X		
98			X
99	X		
100		X	
101	X		
102		X	
103	X		
104			X
105	X		
106	X		
107	X		
108	X		
109	X		
110			X
111	X		

Notes:
(1) LOWRF D/B Team will be responsible for satisfying the indicated conditions of approval in the Coastal Development Permit as they pertain to design and construction of the Water Recycling Facility.
(2) In conjunction with the County.

Appendix C

SCADA PRE-DESIGN TECHNICAL MEMORANDUM

San Luis Obispo County
Los Osos Wastewater Project Development

SCADA PRE-DESIGN TECHNICAL MEMORANDUM

FINAL
May 2011

2700 YGNACIO VALLEY ROAD • SUITE 300 • WALNUT CREEK, CALIFORNIA 94598 • (925) 932-1710 • FAX (925) 930-0208

San Luis Obispo County
Los Osos Wastewater Project Development

SCADA PRE-DESIGN
TECHNICAL MEMORANDUM

TABLE OF CONTENTS

Page No.

1.0 BACKGROUND 1

2.0 SCADA SYSTEM ARCHITECTURE DRAWING MODIFICATIONS 1

3.0 INSTRUMENTATION DRAWING REVIEW 4

4.0 EQUIPMENT SPECIFICATIONS REVIEW 4

LIST OF FIGURES

Drawing N-1 2

1.0 BACKGROUND

The intent of this technical memorandum (TM) is to review the process and control system pre-design including the infrastructure requirements for an integrated supervisory control and data acquisition (SCADA) system for the Los Osos Wastewater facilities. In preparing this TM, the 2004 Los Osos Wastewater Project Areas A through D drawings and specifications and SCADA architecture were reviewed. This TM provides direction on major changes that need to be included to bring the 2004 instrumentation and control design drawings and specification drawings to current technology standards. In addition to the technology update, the TM will provide direction on how the 2004 SCADA system architecture design will need to be updated in order to accommodate the WWTP location change to the Giacomazzi site.

2.0 SCADA SYSTEM ARCHITECTURE DRAWING MODIFICATIONS

The SCADA System Architecture drawing (Drawing N-1) has been updated from the 2004 version to include recommendations for a more reliable, efficient, and up-to-date PLC and SCADA architecture. Some key changes to the SCADA System Architecture drawing are listed below:

1. A Network Attached Storage (NAS) device was added for storage of network and historical data. This replaces the antiquated option of writing to backup discs for long term storage.
2. Redundant Rack Mounted SCADA Servers were added for redundancy and reliability of the SCADA network. Moving the SCADA Servers from an operator accessible tower type workstation to a rack increases the security and functionality and helps to prevent unwanted access.
3. A dedicated rack mounted Historian Server was added for historical storage of SCADA system values.
4. A rack mounted terminal server was added for running terminal services on the remote SCADA workstations. The terminal server is loaded with a SCADA runtime application that it can deploy to the SCADA workstations both at the WWTP site as well as at the remote pump stations. The total number of concurrent workstations that can run the SCADA application depends on the number of terminal services licenses that are purchased. It is recommended that a minimum of five terminal services

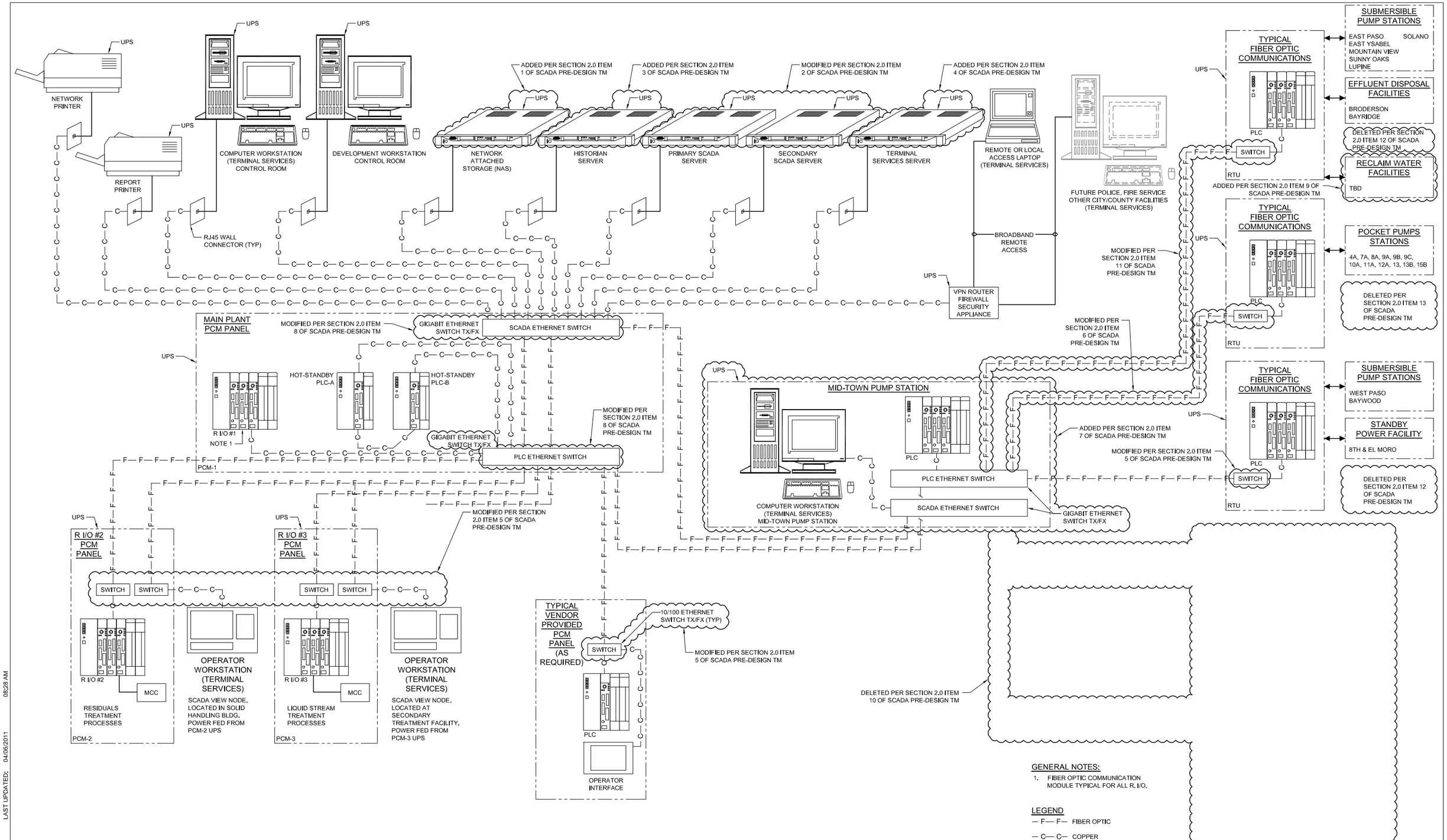

LAST UPDATED: 04/06/2011 08:28 AM

LAST SAVED BY: tflak

REV	DATE	BY	DESCRIPTION

DESIGNED MKR
DRAWN TLF
CHECKED ERB
DATE MARCH 2011

PROJECT ENGINEER

carollo

LOS OSOS COMMUNITY SERVICES DISTRICT

SLO COUNTY

SCADA TECHNICAL MEMORANDUM

INSTRUMENTATION
SCADA SYSTEM ARCHITECTURE
CAROLLO 2011 REVISION

VERIFY SCALES
BAR IS ONE INCH ON ORIGINAL DRAWING
0 1"
IF NOT ONE INCH ON THIS SHEET, ADJUST SCALES ACCORDINGLY

JOB NO. 7630C.00
DRAWING NO. N-1
SHEET NO. OF XX

licenses be purchased to be consistent with similar facilities. The final count should be evaluated with the Owner after a more in-depth discussion of the users on the system.

5. Fiber optic transceivers were replaced with industrial Ethernet switches. It is now less expensive to get Ethernet switches versus fiber optic transceivers, and the switches offer greater flexibility. The Ethernet switches will have both copper and fiber optic connections as necessary.

6. Communication between the WWTP and remote pocket pump stations was changed from dedicated phone line to a fiber optic backbone. Details of the fiber optic routing will need to be reviewed in further detail to ensure available paths are feasible for physically running the fiber network. If the fiber backbone is determined not to be a feasible option the preferred communications will be radio. By providing a dedicated fiber optic backbone the PLC/SCADA communications will see a considerable increase in speed and reliability. By implementing a dedicated fiber optic backbone, the County will have control over the communications line and not have to rely on third party service providers or sharing network capacity.

7. The Mid-Town Pump Station (MTPS) was added to the drawing. It will function as a primary hub for the fiber optic backbone. Fiber from remote locations including the pocket pump stations, standby power facilities, submersible pump stations, reclaim water facilities, and effluent disposal facilities will be landed at a switch at the MTPS and then be routed on to the WWTP.

8. The control system was divided up into two separate networks. One network is dedicated for PLC to PLC traffic. The other network is dedicated for SCADA to SCADA, SCADA to PLC, and other miscellaneous communications. By separating the networks the critical PLC to PLC communication will not share network capacity with the less critical miscellaneous communications. In the event of a SCADA network failure, the PLCs can continue to communicate with each other and operate the facilities without the SCADA network.

9. Additional fiber optic communication locations were added in order to pick up any monitoring and control for the new recycled water system. Number of locations and associated names will be determined in the future.

10. Remote computer workstations located at the LOCSD Water Operations Center and the LOCSD 9th Street Office were removed from the design.

11. Communication between the WWTP and remote locations including submersible pump stations and effluent disposal facilities was changed from radio communication to a fiber optic backbone. Details of the fiber optic routing will need to be reviewed in further detail to ensure available paths are feasible for physically running the fiber network. If the fiber backbone is determined not to be a feasible option the preferred communications will be radio.

12. Harvest well facilities including Loma, East Paso, and Palisades were removed from the design.

13. Santa Maria and Pismo effluent disposal facilities were removed from the design.

3.0 INSTRUMENTATION DRAWING REVIEW

The remaining 2004 instrumentation drawings for Areas A through D were reviewed for conformance with the system architecture recommendations and should be modified as follows:

1. Fiber optic routing drawings will need to be revised to incorporate the addition of the Mid-Town Pump Station and the relocation of the WWTP to the Giaccomazi site.

2. P&ID drawings and control strategies for the MTPS processes need to be created.

3. A new PLC, SCADA workstation, and industrial Ethernet switch will need to be added to the MTPS site along with the necessary connections to and from the WWTP, pocket pump stations, reclaim water facilities, effluent disposal facilities, submersible pump stations, and standby power facilities.

4. The I/O and instrument lists will require update to incorporate new monitoring and control from the Mid-Town Pump Station.

4.0 EQUIPMENT SPECIFICATIONS REVIEW

The instrumentation and control industry is one that experiences continuous and aggressive changes as technological advances allow for more efficient and convenient ways of monitoring and controlling industrial/municipal facilities. As a result, many of the Division 17 specifications from the 2004 design are dated and need to be revised in order to be brought up to the current technologies standards in the industry. Each Division 17 specification has been listed below with recommended revisions:

1. 17100 – Process Control and Instrumentation Systems
    a) Upgrades to some ISA standards need to be addressed.
    b) Revisions will need to be made to the field instrument list to include any changes as a result of the WWTP site change including possible design changes to the various distribution pump stations. Ranges and set points will need to be confirmed based on any potential mechanical or structural design changes. Several pressure transmitters are referencing the incorrect specification.
    c) Include a requirement for a screens meeting with the County, Integrator, and Engineer. Screens meeting needs to be conducted to ensure that the basic function, format, and feel of the existing SCADA screens throughout the County facilities are matched as closely as possible.

2. 17102 – In-Line Liquid Flow Measuring Systems
    a) Recommend adding model numbers for the three manufactures listed.
3. 17104 – Gas Flow Measuring Systems
    a) It is not clear between the specification and the instrument list which gas flow measuring technology is to be used. Recommend eliminating the flow technology that is not going to be utilized from the specification to reduce confusion during the submittal process.
    b) Recommend adding thermal mass flow technology to the specification for aeration gas measurement and removing the pitot tube and DP pressure transmitter technology.
4. 17105 – Gas Flow Detection Devices
    a) Recommend updating the model listed in the specifications to the newer FLT93 or FS2000 models with increased functionality and accuracy.
5. 17106 – Level Measuring Systems
    a) It is not clear between the specification and the instrument list which level measuring technology is to be used. Recommend eliminating the bubbler type technology unless there is a location that this device is specifically desired. Ultrasonic technology offers a much less maintenance intensive solution to level measurement.
6. 17107 – Level Detection Switches
    a) Suggest removing technologies that are not included in the design to avoid confusion during the submittal process.
7. 17108 – Pressure Measuring System
    a) Some of the models listed have been replaced with newer models and are no longer being manufactured. Recommend updating model numbers to match current production.
8. 17109 – Pressure Detection Switches
    a) No significant revisions required to this specification.
9. 17110 – Temperature Measuring System
    a) Some of the models listed have been replaced with newer models and are no longer being manufactured. Recommend updating model numbers to match current production.
10. 17111 – Temperature Detection Switches
    a) No significant revisions required to this specification.
11. 17112 – Process Analyzer Measuring Systems
    a) Some of the models listed have been replaced with newer models. Recommend updating model numbers to the most current model.
        a) Replace the HACH SC100 with the HACH SC200

b) Replace the HACH 1720D with the HACH 1720E

12. 17113 – Safety Monitoring Systems
    a) No significant revisions required to this specification.
13. 17202 – PLC Enclosures
    a) No significant revisions required to this specification.
14. 17300 – Control Strategies
    a) No significant revisions required to this section.
    b) Control strategies need to be added for the Mid-Town Pump Station.
15. 17510 – PLC-Based Control System Hardware
    a) Recommend removing fiber optic converters from the design and replacing with industrial switches. Refer to the SCADA System Architecture drawing.
    b) Recommend removing fiber optic modems from the design and replacing with industrial switches. Refer to the SCADA System Architecture drawing.
    c) Recommend removing the modems from the design and bringing the control communication from the pocket pump stations and other remote sites over fiber optic Ethernet to the Mid-Town Pump Station.
    d) Recommend adding communication protocol and associated PLC cards for PLC to PLC communication to the specifications.
    e) Workstations:
        a) Computer and monitor specifications are outdated and needs to be revised to ensure processor speeds, memory, redundancy, software, and accessories are in line with the current technology.
        b) Recommend having only one development workstation. Other workstations should function as a view node into the SCADA system utilizing terminal services as shown on the SCADA System Architecture drawing.
    f) Servers
        a) Server specifications are outdated and need to be revised to ensure processor speed, memory, Redundant Array of Independent Discs (RAID) configuration, and software are in line with the current technology.
        b) Recommend utilizing 19 inch rack mount servers rather than tower type units.
        c) Recommend including a specification for 19 inch server rack, Dell PowerEdge or equivalent.
        d) Recommend providing a total of four rack mounted servers as indicated on the SCADA System Architecture drawing, including:
            (1) Primary SCADA Server

(2) Secondary SCADA Server

(3) Historian Server

(4) Terminal Services Server

e) Recommend providing a 19 inch rack mount retractable monitor capable of switching between servers within the rack utilizing a KVM switch.

g) Network Hardware

a) Recommend a managed gigabit Ethernet switch for the primary SCADA and PLC switches. Refer to the SCADA System Architecture drawing for number of fiber and copper connections required. Recommend removing Netgear and 3COM from the specifications and replacing with Hewlett Packard ProCurve switch or CISCO 3400 series.

b) Recommend replacing fiber optic converters and modems with industrial type switches such as Ntron or Hirschmann.

c) Remote access unit should be updated to meet current remote access safety capabilities and standards. Recommend replacing Netgear with a Hewlett Packard equivalent.

h) Data Storage

a) Recommend adding a section that includes a Network Attached Storage (NAS) device. The NAS works like an external hard drive that systematically stores network data as required. The NAS hardware should be 19 inch rack mount with an installed storage capacity minimum of 5TB and the capability for future capacity of 20TB. The NAS system has been added to the SCADA System Architecture drawing.

i) IO Listing

a) The SCADA System Architecture drawing has been amended to show R I/O#1. R I/O#1 should have been shown on the original 2004 drawings as there is an IO list that includes several points from R I/O #1.

16. 17520 – PLC-Based Control System Software

a) PLC Software

a) Recommend changing the PLC software package for the Modicon platform from Concept to UnityPro.

b) Currently there are several manufactures of PLCs and PLC software listed in the specifications. If the County wants to standardize on a single PLC and PLC software the other manufactures will need to be removed from the specification.

b) SCADA Software

a) The county has standardized on Wonderware InTouch. Remove other manufactures listed in this specification to stay consistent with the software being used at the existing facilities.

b) Recommend that SCADA licenses be changed in the specification to the following:

(1) SCADA Server with Redundancy – 2

(2) Historian (with sufficient tag database) – 1

(3) Runtime/Development Workstation – 1

(4) Terminal Services License – 5

(i) The terminal services licenses allow local and remote workstations to access the SCADA application via the Terminal Server. This reduces the cost of purchasing licenses for each workstation and requires less maintenance as updates to the application software only need to be loaded on the terminal server and not each remote workstation.

c) Reporting

(1) Amend this portion of the specification to include requirements for a Wonderware InTouch Historian software package provided with the SCADA software.

(2) Recommend including a section on the requirements for reporting software and report generation and what reports are required. The County has standardized on ActiveFactory reporting software. Include this as a requirement to be provided with the SCADA software.

PRELIMINARY EQUIPMENT LIST

EQUIPMENT LIST

Project No. 8930A10

Name : LOWRF Preliminary Design Development and Design-Build Support

Updates acknowledged by John Briones: 5/17/2012

Equipment Name	Equipment Number	P&ID NO.	Proj Phase	Location	MCC SWBD	Drive Type	Motor Enclosure	Motor rpm	Motor, HP (1 HP = 1 kVA)	Non-Mtr kVA	Volts	Phase	Duty	Standby Power
AREA XX - Preliminary Treatment														
Bar Screen No. 1			1			FVNR			5		480	3	Duty	Yes
Bar Screen Inlet Gate No. 1			1			FVNR			2		480	3	Intermit	Yes
Bar Screen No. 2			1			FVNR			5		480	3	Backup	No
Bar Screen Inlet Gate No. 2			1			FVNR			2		480	3	Backup	No
Screenings Washer/Compactor No. 1			1			FVNR			5		480	3	Duty	Yes
Screenings Washer/Compactor No. 2			1			FVNR			5		480	3	Backup	No
Odor Control Fan No. 1			1			FVNR			3		480	3	Duty	Yes
Odor Control Fan No. 2			1			FVNR			3		480	3	Backup	No
AREA XX - Secondary Treatment														
Anoxic Mixer No. 1			1			FVNR	Submersible		15		480	3	Duty	Yes
Anoxic Mixer No. 2			1			FVNR	Submersible		15		480	3	Duty	Yes
Mechanical Aerator No.1			1			RVSS	TEFC		75		480	3	Duty	Yes
Mechanical Aerator No.2			1			VFD	TEFC		75		480	3	Duty	Yes
Mechanical Aerator No.3			1			RVSS	TEFC		75		480	3	Duty	Yes
Mechanical Aerator No.4			1			VFD	TEFC		75		480	3	Duty	Yes
Secondary Clarifier No. 1 Drive			1			FVNR	TEFC		1		480	3	Duty	Yes
Secondary Clarifier No. 2 Drive			1			FVNR	TEFC		1		480	3	Duty	Yes
Secondary Scum Pump No. 1			1			FVNR	Submersible		3		480	3	Duty	No
Secondary Scum Pump No. 2			1			FVNR	Submersible		3		480	3	Duty	No
RAS/WAS Pump No. 1			1			VFD	TEFC		15		480	3	Duty	Yes
RAS/WAS Pump No. 2			1			VFD	TEFC		15		480	3	Standby	No
RAS/WAS Pump No. 3			1			VFD	TEFC		15		480	3	Duty	Yes
WAS Motorized Plug Valve			1			FVR	TEFC		0.75		480	3	Intermit	Yes
Tertiary Treatment, Effluent Disinfection, Pumping and Handling														
Disk Filter Drive 1			1						0.75		480	3	Duty	Yes
Disk Filter Backwash Pump 1			1			FVNR	TEFC		2		480	3	Duty	Yes
Disk Filter Inlet Valve 1			1			FVR			1		480	3	Intermit	Yes
Disk Filter to Waste Valve 1			1			FVR			1		480	3	Intermit	Yes
Disk Filter Backwash Waste Valve 1			1			FVR			1		480	3	Intermit	Yes
Disk Filter Sludge Waste Valve 1			1			FVR			1		480	3	Intermit	Yes
Disk Filter Drive 2			1						0.75		480	3	Standby	No
Cloth Filter Backwash Pump 2			1			FVNR	TEFC		2		480	3	Standby	No
Disk Filter Inlet Valve 1			1			FVR			1		480	3	Intermit	No
Disk Filter to Waste Valve 1			1			FVR			1		480	3	Intermit	No
Disk Filter Backwash Waste Valve 1			1			FVR			1		480	3	Intermit	No
Disk Filter Sludge Waste Valve 1			1			FVR			1		480	3	Intermit	No
UV Train 1, Inlet Valve			1			FVR			1		480	3	Intermit	Yes
UV Train 1, Reactor 1			1					(20 kW)		25	480	3	Duty	Yes
UV Train 1, Reactor 2			1					(20 kW)		25	480	3	Duty	Yes
UV Train 1, Outlet Valve			1			FVR			1		480	3	Intermit	Yes
UV Train 2, Inlet Valve			1			FVR			1		480	3	Intermit	Yes
UV Train 2, Reactor 1			1					(20 kW)		25	480	3	Duty	Yes
UV Train 2, Reactor 2			1					(20 kW)		25	480	3	Duty	Yes
UV Train 2, Outlet Valve			1			FVR			1		480	3	Intermit	Yes
UV Train 3, Inlet Valve			1			FVR			1		480	3	Intermit	No
UV Train 3, Reactor 1			1					(20 kW)		25	480	3	Standby	No
UV Train 3, Reactor 2			1					(20 kW)		25	480	3	Standby	No
UV Train 3, Outlet Valve			1			FVR			1		480	3	Intermit	No
Coagulant Pump 1						VFD	TEFC	(250 VA)			120	1	Intermit	Yes
Coagulant Pump 2						VFD	TEFC	(250 VA)			120	1	Standby	No
Sodium hypochlorite Pump 1						VFD	TEFC	(250 VA)			120	1	Intermit	Yes
Sodium hypochlorite Pump 2						VFD	TEFC	(250 VA)			120	1	Standby	No

EQUIPMENT LIST

Project No. 8930A10

Name : LOWRF Preliminary Design Development and Design-Build Support

Updates acknowledged by John Briones: 5/17/2012

Equipment Name	Equipment Number	P&ID NO.	Proj Phase	Location	MCC SWBD	Drive Type	Motor Enclosure	Motor rpm	Motor, HP (1 HP = 1 kVA)	Non-Mtr kVA	Volts	Phase	Duty	Standby Power
Chemical/UV Elect Building HVAC														Yes
Effluent Pump 1			1			FVNR	TEFC		25		480	3	Duty	No
Effluent Pump 2			1			FVNR	TEFC		25		480	3	Duty	No
Effluent Pump 3			1			FVNR	TEFC		25		480	3	Standby	No
Effluent Pump 4 (future)			2			RVSS	TEFC		50		480	3	Duty	No
Effluent Pump 5 (future)			2			RVSS	TEFC		50		480	3	Duty	No
Effluent Pump 6 (future)			2			RVSS	TEFC		50		480	3	Standby	No
Utility Water Pump 1			1			FVNR	TEFC		40		480	3	Duty	Yes
Utility Water Pump 2			1			FVNR	TEFC		40		480	3	Standby	No
Solids Handling														
Sludge Aeration Blower No. 1			1			RVSS	TEFC		35		480	3	Duty	Yes
Sludge Aeration Blower No. 2			1			RVSS	TEFC		35		480	3	Standby	No
Storage Tank Mixer No. 1			1			Submersible			3		480	3	Duty	No
Storage Tank Mixer No. 2			1			Submersible			3		480	3	Duty	No
Dewatering Feed Pump No. 1	PMP-XXX		1			VFD	TEFC		15		480	3	Duty	No
Dewatering Feed Pump No. 2	PMP-XXX		1			VFD	TEFC		15		480	3	Standby	No
Dewatering Screw Press No. 1	XXX		1			VFD	TEFC		5		480	3	Duty	No
Dewatering Screw Press No. 2	XXX		1			VFD	TEFC		5		480	3	Duty	No
Wash water Solenoid Valve	XV-XX										120	1		
Wash water Solenoid Valve	XV-XXX										120	1		
							TEFC							
Shaftless Screw Conveyor No. 1	XXX		1				TEFC		5		480	3	Duty	No
Shaftless Screw Conveyor No. 2	XXX		1						10		480	3	Duty	No
Polymer Blending Unit 1	XXX				28	PKG		(FLA=20)			120	1	Duty	No
Polymer Blending Unit 2	XXX				29	PKG		(FLA=20)			120	1	Standby	No
Support Facilities														
Plant Drain Pump No. 1			1			VFD	Submersible		30		480	3	Duty	Yes
Plant Drain Pump No. 2			1			VFD	Submersible		30		480	3	Duty	Yes
Storm Water Pump No. 1			1			FVNR	Submersible		7.5		480	3	Duty	No
Storm Water Pump No. 2			1			FVNR	Submersible		7.5		480	3	Backup	No
Administration Building HVAC & Misc.			1			PKG and FVNR	(HVAC/MOCP 70 amps)			187	480	3	Duty	Yes
Maintenance Building HVAC & Misc.			1			PKG and FVNR	(HVAC/MOCP 30 amps)			159	480	3	Duty	Yes
Potable Water Air Gap Pump No. 1			1			FVNR	TEFC		15		480	3	Duty	Yes
Potable Water Air Gap Pump No. 2			1			FVNR	TEFC		15		480	3	Backup	No
Potable Water Well Pump No. 1			1			VFD	Submersible		5		480	3	Duty	Yes
Potable Water Well Pump No. 2			1			VFD	Submersible		5		480	3	Backup	No
Electrical Building HVAC & Misc.			1							100	480	3	Duty	Yes

NOTES:

1. Standby Load, Not Critical - Load not to be used for sizing standby generator.

	PHASE 1	PHASE 2 (Future)	TOTAL		PHASE 1	PHASE 2	TOTAL
Total Connected Loads (kVA)	1424.25	150	1574	**Total Generator Loads (kVA)**	1078.75	0	1079
Total Running Loads (kVA)	1182.25	100	1282	**Non-Standby Loads (kVA)**	345.5	150	496

Appendix E

PRELIMINARY GEOTECHNICAL REPORT
LOS OSOS WASTEWATER PROJECT

PRELIMINARY GEOTECHNICAL REPORT
LOS OSOS WASTEWATER PROJECT
LOS OSOS MORTUARY, GIACOMAZZI, AND BRANIN PROPERTIES
SAN LUIS OBISPO COUNTY, CALIFORNIA

Prepared for:
COUNTY OF SAN LUIS OBISPO

July 17, 2007

FUGRO WEST, INC.

660 Clarion Court, Suite A
San Luis Obispo, California 93401
Tel: (805) 542-0797
Fax: (805) 542-9311

July 17, 2007
Project No. 3014.026

County of San Luis Obispo
Department of Public Works, Room 207
County Government Center
San Luis Obispo, CA 93408

Attention: Mr. John Waddell

Subject: Preliminary Geotechnical Report, Los Osos Mortuary, Giacomazzi, and Branin Properties, Los Osos Wastewater Project, San Luis Obispo County, California

Dear Mr. Waddell:

Fugro is pleased to submit this Preliminary Geotechnical Report for the Los Osos Wastewater Project on in San Luis Obispo County, California. This report was prepared in accordance with the scope of services presented in our proposal dated April 3, 2007, and authorized under the County's Purchase Order No. 25003474, dated April 24, 2007.

The purpose of this report is to provide preliminary geotechnical considerations for the three combined properties that are being considered as a possible site for the new wastewater treatment plant. This report provides preliminary geotechnical considerations and opinions regarding site geology, soil and groundwater conditions encountered, potential for the sites to be impacted by geologic hazards, and anticipated grading and foundation support for the proposed structures.

Please contact the undersigned if you have questions regarding this report, or require additional information.

Sincerely,

FUGRO WEST, INC.

Christopher L. Lovato, P.E. 60316
Project Engineer

Lori E. Prentice, C.E.G. 2312
Associate Engineering Geologist

Copies: 4 – Addressee, 1 PDF

CONTENTS

Page

1. SITE DESCRIPTION 1

2. WORK PERFORMED 1
   2.1 PURPOSE 1
   2.2 SCOPE 1
   2.3 FIELD EXPLORATION 2
      2.3.1 Cone Penetration Testing 2
      2.3.2 Hand Auger Borings 3
   2.4 GENERAL CONDITIONS 3

3. SITE CONDITIONS 4
   3.1 GEOLOGIC SETTING 4
   3.2 FAULTING 4
   3.3 SUBSURFACE CONDITIONS 4
   3.4 GROUNDWATER 5

4. GEOLOGIC HAZARDS 5
   4.1 SEISMICITY AND STRONG GROUND MOTION 6
      4.1.1 Recent Seismicity 6
      4.1.2 Ground Motion Study 6
   4.2 SURFACE FAULT RUPTURE 7
   4.3 LIQUEFACTION, SEISMIC SETTLEMENT, AND LATERAL SPREADS 8
   4.4 SUBSIDENCE AND COLLAPSE 8
   4.5 LANDSLIDING/SLOPE INSTABILITY 8
   4.6 GROUND LURCHING 9
   4.7 EROSION 9
   4.8 EXPANSIVE SOILS 9
   4.9 NATURALLY OCCURRING ASBESTOS 9
   4.10 FLOODING, TSUNAMIS AND INUNDATION 9
   4.11 HYDROCOLLAPSE POTENTIAL 9

5. CONCLUSIONS AND RECOMMENDATIONS 10
   5.1 SUMMARY OF FINDINGS 10
   5.2 PRELIMINARY SEISMIC DATA 11
   5.3 FOUNDATION DESIGN CONSIDERATIONS 11
   5.4 EXPANSIVE SOILS 12
   5.5 GRADED SLOPES 12
   5.6 DRAINAGE AND EROSION CONSIDERATIONS 12
   5.7 CONSTRUCTION CONSIDERATIONS 12
      5.7.1 Excavation 12
      5.7.2 Use of On-site Soil 12
      5.7.3 Dewatering 13

6. CONTINUATION OF SERVICES 13

7. ..... REFERENCES 13

LIST OF PLATES

Plate

Vicinity Map 1
Field Exploration Plan 2
Regional Geologic Map 3
Los Osos Fault Zone and Lineaments 4
Regional Fault Map 5
Historical Seismicity Map 6

APPENDIX A – CONE PENETRATION TEST LOGS

Key to CPT Logs A-1
Log of CPT C-1 through C-7 ..... A-2 through A-8

APPENDIX B – FIELD EXPLORATION LOGS

Key To Terms & Symbols Used On Logs B-1
Log of Hand Auger No. HA-1 through HA-4 ..... B-2 through B-5

1. SITE DESCRIPTION

The proposed site consists of three neighboring properties that are being considered as the possible location for the new wastewater treatment plant. The three properties are identified as the Los Osos Mortuary and Memorial Park, the Giacomazzi, and the Branin properties. The site is located behind the Los Osos Valley Memorial Park on the north side of Los Osos Valley Road, approximately 1 mile east of the community of Los Osos. The location of the site relative to nearby streets and geographic landmarks is shown on Plate 1, Vicinity Map. The layout of the site, showing each of the three properties is shown on Plate 2, Field Exploration Plan.

The site is within an agricultural property (grass-lands and crops) and is bound by the Los Osos Mortuary to the south, agricultural fields and northerly-draining canyon drainage to the west, the Los Osos Valley drainage (Warden/Eto Lake) to the north, and grasslands to the east. The Los Osos Mortuary property is currently undeveloped and covered with grass and weeds. The Giacomazzi and portions of the Branin properties are currently active agricultural fields. Other portions of the Branin property are being used as grazing/grass-lands.

The topography over the majority of the site and vicinity is characterized by gently rolling hills. Elevations range from about 30 feet near the Los Osos Valley drainage in the northern portion of the site to about 110 feet near the mortuary and Los Osos Valley Road. Slope inclinations in the vicinity of the Los Osos Valley drainage near the northern portion of the property and along the northerly-draining drainage along the western edge of the site range from about 3h:1v to 5h:1v.

Two northeast trending drainages cross the Giacomazzi property diagonally near the eastern edge of the property that appear to be subject to erosion in an easterly direction. A north-draining swale crosses the Branin Property along the western portion of the property. A second north-draining drainage is located west of the Branin property that appears to be subject to surficial instability and erosion along the western portion of the Branin Property.

2. WORK PERFORMED

2.1 PURPOSE

The purpose of this report is to provide preliminary geotechnical considerations and opinions for the proposed wastewater treatment plant site. The primary geotechnical considerations evaluated for the project are characterization of the subsurface materials, geologic hazards, anticipated site preparation and grading for support of the improvements, and foundation considerations. The information provided herein is preliminary and is not intended for design of the project. A design-level geotechnical study will be required if the project proceeds to design.

2.2 SCOPE

To evaluate the geotechnical considerations for the project, we performed the following scope of work:

- Site visits to observe the general site conditions, meet with the Los Osos Mortuary and Giacomazzi property representatives, and notifying Underground Service Alert of the field exploration program;
- Data review of selected published geologic maps, and geotechnical data available from our in-house files;
- Field exploration consisting of drilling four hand auger borings to depths of approximately 10 to 12.5 feet below the existing ground surface and advancing seven cone penetration test (CPT) soundings to depths of approximately 34 to 100 feet below the existing ground surface; and
- Preparation of this report summarizing the data obtained for the site, and our preliminary conclusions and recommendations regarding;
  - Geologic setting;
  - Soil and groundwater conditions encountered;
  - Potential for the site to be impacted by geologic hazards such as seismic shaking, fault rupture, liquefaction, landsliding, or slope instability;
  - Anticipated site grading and foundation support for the improvements, and
  - Construction considerations.

2.3 FIELD EXPLORATION

The field exploration program was modified from our proposed scope of work because of site access and accessibility considerations. Cone Penetration Test (CPT) soundings were limited to areas accessible to the truck-mounted equipment. At the time of our exploration, the Giacomazzi property was recently plowed and planted, and the CPT rig could only be operated on graded roads along the perimeter of the properties. Also, Mr. Waddell of the County of San Luis Obispo informed us that entry to the Branin property would not be permitted, therefore, CPT exploration was not performed on that property. Based on the CPT access constraints, hand auger explorations were used to supplement CPT data as agreed to with the County.

2.3.1 Cone Penetration Testing

Seven CPT soundings were advanced at the project site by Fugro Geosciences of Santa Fe Springs, California near the locations shown on Plate 2. CPT soundings C-1 and C-2 were advanced to refusal depths of approximately 34.5 and 42 feet below the existing ground surface, respectively. CPT C-3 through C-6 were advanced to depths of 50 feet, and CPT C-7 was advanced to 100 feet below the existing ground surface.

The CPT soundings were performed using electric cone penetrometers and piezocone penetrometers. The penetrometers were advanced into the ground using a hydraulic ram mounted in a truck having a weight of approximately 20 tons. The cone and piezocone penetrometers have a diameter of approximately 1.4 inches. Cone tip resistance (q_c) and

sleeve friction (f_s) were recorded on the penetrometer during all CPT soundings. The porewater pressure during penetration was measured behind the tip (u_2) in piezocone soundings. Data was recorded at approximately 2 cm intervals using an on-board computer to provide a near-continuous profile of the soil conditions encountered during penetration. The friction ratio (FR) was computed for each value of q_c and f_s recorded. The data was retrieved electronically for use in subsequent geotechnical analyses. CPT data and soil behavior type classifications were used to evaluate the subsurface conditions encountered at the site. Plots of CPT sounding data are presented in Appendix A.

2.3.2 Hand Auger Borings

The hand auger borings were performed by a field engineer using a 3-inch, outside diameter, hand auger. The hand auger borings were drilled to depths ranging from approximately 10 to 12.5 feet below the existing ground surface. Hand auger borings were performed to supplement soil data obtained from the CPT soundings and at areas that could not be accessed by the CPT rig. The logs of the borings are presented in Appendix B.

2.4 GENERAL CONDITIONS

Fugro prepared the conclusions, recommendations, and professional opinions of this report in accordance with the generally accepted geotechnical principles and practices at this time and location. This warranty is in lieu of all other warranties, either expressed or implied. This report was prepared for the exclusive use of The County of San Luis Obispo and their authorized agents only. It is not intended to address issues or conditions pertinent to other parties, projects or for other uses. The report and the drawings contained herein are not intended to act as construction drawings or specifications.

The scope of services did not include any environmental assessments for the presence or absence of hazardous/toxic materials in the soil, surface water, groundwater, or atmosphere. Any statements, or absence of statements, in this report or data presented herein regarding odors, unusual or suspicious items, or conditions observed are strictly for descriptive purposes and are not intended to convey engineering judgment regarding potential hazardous/toxic assessment.

Soil and rock deposits can vary in type, strength, and other geotechnical properties between points of observations and exploration. Additionally, groundwater and soil moisture conditions also can vary seasonally or for other reasons. Therefore, we do not and cannot have a complete knowledge of the subsurface conditions underlying the site. The conclusions and recommendations presented in this report are based upon the findings at the points of exploration, and interpolation and extrapolation of information between and beyond the points of observation, and are subject to confirmation based on the conditions revealed by construction.

3. SITE CONDITIONS

3.1 GEOLOGIC SETTING

The project is located in the Los Osos Valley that is part of the Coast Ranges geologic and geomorphic province. That province consists of north-northwest-trending sedimentary, volcanic, and igneous rocks extending from the Transverse ranges to the south, into northern California. Rocks of the Coast Ranges province are predominately of Jurassic and Cretaceous age; however, some pre-Jurassic, along with Paleocene-age to Recent rocks are present. The surficial geology in the project vicinity, as mapped by Hall (1979), is shown on Plate 3.

The site is located on a terrace that is dissected by Los Osos Creek to the west. As shown on Plate 3, the Paso Robles Formation underlies the plateau and gently rolling hill area of the majority of the project site as mapped by Hall (1979). Alluvium is located in the low-lying areas near the base of the gently rolling hills along the western project boundary and at the northern end of the Branin property. The alluvial sediments are associated with the Los Osos Valley drainage and Warden Lake. Other authors have mapped the plateau area as being underlain by eolian dune sand (Qe) as indicated on Plate 4. Based on our site reconnaissance and the results of the CPT soundings advanced for this study, it appears that the plateau area is underlain by the Paso Robles Formation as suggested by Hall (1979).

The Paso Robles Formation is described as consisting of weakly consolidated sandstone, siltstone, claystone, and conglomerate in the Los Osos Valley area. Although described in terms of rock designation because of the formational name, the sediments of the Paso Robles Formation are generally equivalent to stiff to hard cohesive soils and medium dense to very dense granular soils.

3.2 FAULTING

The closest active fault (as defined by the California Geologic Survey [CGS]) in the site vicinity is the Los Osos fault zone (PG&E 1988, Lettis & Hall, 1990; Asquith, 1997). A segment of the fault is designated as an Alquist-Priolo earthquake fault zone near the City of San Luis Obispo. Lettis & Hall (1990) describe the Los Osos fault zone as a series of discontinuous, subparallel and en echelon fault traces that extend from Hosgri fault offshore to Lopez Reservoir, a distance of about 35 miles. Lettis and Hall (1990) subdivided the fault zone into four segments: Estero Bay, Irish Hills, Lopez Reservoir, and Newsom Ridge. The Irish Hills segment of the Los Osos fault is about 10 to 12 miles long and extends from Morro Bay eastward to San Luis Creek. This segment of the fault forms the boundary between the Los Osos Valley and the Irish Hills and has documented Holocene offset (PG&E 1988). Portions of the fault east of Los Osos (east of study area) have been zoned active by the CGS.

3.3 SUBSURFACE CONDITIONS

The soil and groundwater conditions were characterized for the preliminary study based on the results of the field exploration program. The locations of the explorations are shown on Plate 2. Logs of the CPT soundings and hand auger borings are presented in Appendices A and

B, respectively. Correlations developed by Robertson and Campanella (1984) were use to classify soils encountered in the CPT soundings.

Paso Robles Formation and alluvium are mapped at the site. The alluvium is mapped along the northern portion of the site along Warden Lake and the low lying agricultural field to the west of the site. Materials of undifferentiated Paso Robles Formation and/or alluvium were encountered in each of the explorations at the ground surface to the maximum depth explored, approximately 100 feet below the existing ground surface in CPT C-7. The upper 3 to 4 feet of materials appear to be relatively loose/soft and likely represent topsoil/colluvial materials disturbed during previous agricultural/plowing activities.

Stiff clay and hard clay and silt with interbedded layers of dense sand were encountered in C-1 through C-5 from the ground surface to depths of approximately 20 to 30 feet below the existing ground surface. Below depths of about 20 to 30 feet, dense to very dense clayey sand with interbeds of hard silt and clay were encountered to the maximum depth explored, approximately 35 to 50 feet below the existing ground surface. Refusal was encountered in CPT's C-1 and C-2 at approximately 35 and 42.5 feet, respectively. Along the western portion of the site the stiff to very stiff silty clay to clayey silt with interbedded firm to stiff clay were encountered in CPT's C-6 and C-7 to 100 feet below the existing ground surface.

3.4 GROUNDWATER

The CPT holes were checked with a water-level sounder after completion of the CPT sounding at each location. Groundwater was recorded in the CPT holes or interpreted from porewater pressure measurements in CPT C-2 through C-7 at depths ranging from 30 to 48 feet below the existing ground surface. Water was not recorded in CPT C-1 to the maximum depth explored, approximately 34.5 feet below the existing ground surface. Based on published mapping, the Warden Lake area at the northern end of the property can be a marshy environment and has contained surface water in the past. Variations in surface and groundwater conditions will likely occur as a result of changes in precipitation, irrigation, runoff, and other factors.

4. GEOLOGIC HAZARDS

The following geologic hazard assessment is based on review of published information regarding regional and local geologic conditions and observations made during our site visits. The site is not within a San Luis Obispo County designated Geologic Study Area (San Luis Obispo 2006). Our assessment of geologic hazards was performed for input to the environmental impact report being prepared for the project, and to assist the County is considering potential sites for a new wastewater treatment plant.

4.1 SEISMICITY AND STRONG GROUND MOTION

4.1.1 Recent Seismicity

The site is located within a seismically active region of Central California that is prone to moderate to large earthquakes. The Los Osos area was impacted by the December 22, 2003 magnitude 6.5 earthquake that occurred near the town of San Simeon. The earthquake, now known as the San Simeon Earthquake, may have occurred on the Oceanic or Nacimiento fault zones located in the Santa Lucia Mountains, north of Cambria and west of the City of Paso Robles. Fault rupture likely occurred following a reverse or oblique-reverse type fault mechanism.

The epicenter of the San Simeon earthquake was located approximately 15 to 20 miles north of the project site. A ShakeMap for the site developed by the California Integrated Seismic Network (CISN 2003) shows that the project site likely experienced moderate ground motion during the earthquake. Peak horizontal ground accelerations at the project site, as estimated from the ShakeMap, were likely about approximately 0.12g.

4.1.2 Ground Motion Study

A probabilistic seismic hazard evaluation for the site was performed using the computer program FRISKSP (Blake, 2000) and the CGS (1996) California fault database. The program FRISKSP is based on FRISK (McGuire, 1978) and has been modified for the probabilistic estimations of seismic hazards using three-dimensional earthquake sources. The intent of our evaluation was to estimate strong ground motion corresponding to the Design Basis Earthquake (DBE) and Upper-Bound Earthquake (UBE). The DBE is defined by the building code as an earthquake having a 10 percent chance of being exceeded in 50 years (Statistical Return Period ≈ 475 years). The UBE is defined as an earthquake having a 10 percent chance of being exceeded in 100 years (Statistical Return Period ≈ 949 Years). FRISKSP was used to perform a search of potential earthquakes occurring on active or potentially faults mapped within a 62-mile radius of the site. The site location was estimated as –120.8017 degrees longitude and 35.3097 degrees latitude. Summarized below are 11 faults and fault segments that were considered the most capable of causing strong ground motion at the site. Additional information is provided in the CDMG (1996) fault database.

Summary of Predominant Faults

Fault	Approximate Distance From the Site (miles)	Maximum Moment Magnitude (M_w)	Fault or Fault Segment Length (miles)	Slip Rate (mm/yr)
Los Osos	0.7	6.8	27	0.5 ± 0.4
Hosgri	8.6	7.3	107	2.5 ± 1.0
San Luis Range (S. Margin)	8.8	7.0	40	0.2 ± 0.1

Fault	Approximate Distance From the Site (miles)	Maximum Moment Magnitude (M_w)	Fault or Fault Segment Length (miles)	Slip Rate (mm/yr)
Rinconada	14.5	7.3	117	1.0 ± 1.0
Casmalia (Orcutt Frontal Fault)	27.3	6.5	18	0.25 ± 0.2
Lions Head	32	6.6	25	0.02 ± 0.02
San Juan	35	7.0	42	1.0 ± 1.0
San Andreas (Cholame)	41	6.9	38	34 ± 5
San Andreas (Parkfield Segment)	41	6.7	23	34 ± 5
San Andreas (1857 Rupture)	41	7.8	214	34 ± 5
Los Alamos(W. Baseline)	47	6.8	17	0.7 ± 0.7

Based on subsurface conditions encountered at the site, the Soil Profile Type selected for our evaluations was Site Class D, "S_D". FRISKSP was then used to estimate strong ground motion for the DBE and UBE using the attenuation relationship proposed by Boore et al. (1997) and assuming an average shear wave velocity of 250 meters per second in the upper 100 feet.

The DBE and UBE were estimated to have a peak ground accelerations of 0.36g and 0.5g with a corresponding earthquake magnitude 6.7. As a result of statistical variations in the methods used to estimate strong ground motion, we expect that peak ground accelerations exceeding the DBE or UBE could potentially occur if a near-field earthquake were to occur on either of these faults.

4.2 SURFACE FAULT RUPTURE

Fault rupture is the displacement of the ground surface created by movement along a fault plane during an earthquake. Mapping by Lettis and Hall (1994) indicate tonal lineaments from aerial photographic review that trend northwestward south of the project site. Tonal lineaments can be related to different soil/bedrock materials resulting from fault offset. According to Lettis and Hall, the tonal lineaments may be related to faulting within the Los Osos fault zone (LOFZ). A portion of the Lettis and Hall map is reproduced on Plate 4.

No indication of scarps or other fault-related features was observed during our site visits for this project or for Fugro (2004). Tonal lineaments mapped by Lettis and Hall are subtle features that may have been disturbed by farming activities over time and/or may not be readily visible at the surface.

The LOFZ is an en-echelon-style reverse fault that extends east-southeast from the Hosgri fault zone offshore of Morro Bay to the Huasna fault zone east of San Luis Obispo. The LOFZ is considered active and a portion of the LOFZ (near the intersection of Los Osos Valley Road and Foothill Boulevard, about 7 miles southeast of the project site) is zoned by the State

of California Alquist-Priolo Special Studies Zones Act In our opinion, the potential exists for fault rupture to affect the project site and proposed improvements.

4.3 LIQUEFACTION, SEISMIC SETTLEMENT, AND LATERAL SPREADS

Liquefaction is a loss of soil strength due to a rapid increase in soil pore water pressures due to cyclic loading during a seismic event. Liquefaction commonly occurs in loose to medium dense sandy soil that is below the groundwater table at the time of an earthquake. The potential and severity of liquefaction will depend on the intensity and duration of the strong ground motion. Seismically induced settlement, collapse, or lateral spreads can occur in soils that are loose, soft, or that are moderately dense and weakly cemented, or in association with liquefaction.

The Paso Robles Formation is typically equivalent to stiff to hard and dense to very dense soil, thus, the majority of the site that is underlain by the Paso Robles Formation, has a low potential for liquefaction. Areas within the Warden Lake area were not evaluated as part of this preliminary study, but are likely to have a moderate to high liquefaction potential based on anticipated high groundwater elevations and recent alluvial sediments.

4.4 SUBSIDENCE AND COLLAPSE

The site is not in an area where the withdrawal of subsurface fluids is known to have caused ground subsidence. The formational materials that underlie the majority of the site generally have low compressibility, and should not be susceptible to significant compression due to lowering of local water levels. The fine-grained alluvial materials contain layers of relatively soft compressible clay. However the potentially compressible soft clay is of limited thickness (less than about 2 to 3 feet). It is therefore our opinion that there is a low potential for subsidence to impact the potential project site.

4.5 LANDSLIDING/SLOPE INSTABILITY

During our site reconnaissance, we observed evidence of landsliding/erosion along the western edge of the Branin Property and erosion along the eastern portion of the Giacomazzi Property. Access to the Branin property was unavailable at the time of our site visits. The erosion on the Giacomazzi property appears to be associated with concentrated runoff and has formed gullies approximately 2 to 6 feet deep along the eastern edge of the farmed field.

During our previous work for the Andre site (Fugro 2004), we observed evidence of landsliding on the northeast-facing hillside adjacent to the Warden Lake area east of the Giacomazzi property. The landslide has a well-defined, sharp headscarp, and was approximately 100 feet wide by about 200 feet long. The landslide appears to be relatively shallow, possibly about 10 feet deep. The cause of the instability is not known, but it may be related to excess moisture/groundwater seepage.

4.6 GROUND LURCHING

Ground lurching occurs as the ground is accelerated during a seismic event. As evidenced by the Loma Prieta, Landers, Northridge, and San Simeon earthquakes, the effects of ground lurching can damage facilities and buried pipelines. Ground lurching occurs due to detachment of underlying stratigraphic units, allowing near-surface soil to move differentially from underlying soil. The site is within a seismically active region of Central California that is prone to moderate to large earthquakes. It is therefore our opinion that there is a potential for ground lurching to impact the site. Ground lurching is generally not a geologic hazard that can be prevented, and therefore is mitigated by implementing preparedness measures.

4.7 EROSION

As described above, erosion was observed near the eastern edge of the Giacomazzi Property. Graded cut and fill slopes associated with the site development will be subject to sheet and rill erosion. Erosion of soils can be accelerated where soils are exposed directly to runoff and/or areas of concentrated storm runoff, such as at culvert outlets. Site drainage and landscape improvements can be designed to reduce the potential for soil erosion.

4.8 EXPANSIVE SOILS

The topsoil encountered at the site consists of sandy fat clay (CH) and lean clay (CL). These types of soils can be expansive. Based on our site observations, we expect that the near surface soils will have a moderate to high potential for expansion.

4.9 NATURALLY OCCURRING ASBESTOS

Naturally occurring asbestos (NOA) is common in serpentine rock throughout San Luis Obispo County. The California Air Resources Board has identified serpentine rock as having the potential to contain asbestos. The Paso Robles Formation and clayey alluvium were encountered at the site. Franciscan Formation/Serpentine was not encountered within the depth of anticipated site grading at the locations explored, and is not mapped in the site vicinity. Therefore, it is our opinion that there is a low potential for NOA to impact the project.

4.10 FLOODING, TSUNAMIS AND INUNDATION

The northern portion of the Branin Property is located within or near a County of San Luis Obispo mapped flood zone. The Giocamazzi and Los Osos Mortuary Properties are not located within the mapped flood zone. The elevation of the site is approximately 30 feet near the northern drainage to about 110 feet near the Los Osos Mortuary. Therefore, it is our opinion that there is a potential for flood, tsunami and inundation hazards to impact the project the northern portion of the site.

4.11 HYDROCOLLAPSE POTENTIAL

The central and southern portions of the site are underlain by relatively firm fine grained materials and relatively dense sandy materials. These materials are not considered susceptible

to hydrocollapse. Exploration was not performed in the Warden Lake alluvial area at the northern end of the site as part of this study. If project components are planned for that area, exploration should be performed to assess the material characteristics and to evaluate the potential hydrocollapse of the alluvial soils.

5. CONCLUSIONS AND RECOMMENDATIONS

We prepared the conclusions and recommendations for this report based on our preliminary geotechnical evaluation of the site conditions and a review of available geotechnical information for other projects located near the project site.

5.1 SUMMARY OF FINDINGS

- The south and eastern portions of the site are underlain by relatively firm fine grained soil and relatively dense sandy soil. The soils in the western portion of the site (CPT C-6 and C-7) contain layers of relatively soft fine-grained soils. Alluvium is mapped along the eastern and northern boundaries of the site. Groundwater was encountered at depths ranging from approximately 30 to 48 feet to below the existing ground surface. Surface and shallow groundwater likely are present along the northern drainage/Warden Lake areas.
- Access to Branin property to conduct subsurface exploration was not permitted for this work. Since subsurface exploration could not be performed on that property, this report and data presented are limited relative to characterizing the subsurface conditions and related geologic hazard for the Branin property. We recommend that additional field exploration be performed to further evaluate the Branin site, if the site is selected for design and construction of the facility.
- The sites are within Seismic Zone 4 and have been subjected to strong ground motions in response to historical earthquakes that have occurred in relatively close proximity to the site. The design of the facility should consider the potential for the site to be subject to strong ground motion in response to nearby or regional earthquakes. The soil encountered by our explorations is generally fine-grained or dense material that would not be considered susceptible to liquefaction. Based on the conditions encountered, there is a low potential for liquefaction or seismic settlement to impact the design of a facility located on the plateau area underlain by Paso Robles formational materials. However, due to the anticipated high groundwater levels and alluvial sediments, the potential for liquefaction to affect project elements located within the low-lying alluvial areas may be moderate to high.
- Development of the site will need to consider the proximity to the low-lying areas that underlie portions of the site, and building set backs from the top of slopes.
- We expect that typical 1 to 2 story structures, below grade structures, and moderately loaded structures can be supported on shallow foundations supported on compacted fill. Relatively heavy structures or large tanks will need to consider the potential for total and differential settlement of the underlying soft soil layers encountered along the western portion of the site.

- Site grading will need to consider the upper potentially expansive soils. Based on the hand auger borings and site observations, we expect that grading for structures would consist of removing the upper 3 to 5 feet of potentially expansive soils and replacing with non-expansive compacted fill.

5.2 PRELIMINARY SEISMIC DATA

The project site is located within Seismic Zone 4 based on the Uniform Building Code and the California Building Code, Title 24. The DBE and UBE for the site is estimated to be an approximately M6.7 earthquake with a corresponding peak ground acceleration of about 0.36g and 0.5g, respectively. The Los Osos fault is the controlling fault for the site, and is mapped approximately 0.7 miles east of the site, and is classified as a type "B" seismic source based on the building code. We recommend that the following values be used for zone-based seismic hazard analyses.

Seismic Data for Use with Building Code

Building Code Ch. 16A Table No.	Parameter	Value
--	Latitude	35.3097
--	Longitude	120.8017
16A-I	Seismic Zone Factor (Z)	0.40
16A-J	Soil Profile Type	(S_D), Stiff Soil Profile
16A-U	Controlling Seismic Source Type	B
16A-S	Near Source Factor (N_a)	1.3
16A-T	Near Source Factor (N_v)	1.6
16A-Q	Seismic Coefficient (C_a)	$0.44N_a = 0.57$
16A-R	Seismic Coefficient (C_v)	$0.64N_v = 1.02$
Figure 16A-3	Control Period (T_s)	0.72
Figure 16A-3	Control Period (T_o)	0.14

5.3 FOUNDATION DESIGN CONSIDERATIONS

Typical 1 to 2 story and moderately loaded structures can likely be supported on shallow foundations bearing in compacted fill. Relatively large or heavy structures located along the western edge of the site will need to consider total and differential settlement of the underlying fine grained materials (See CPT C-6 and C-7).

Allowable bearing pressures of 2,000 to 3,000 pounds per square foot (psf) can be used for preliminary foundation design. Additional exploration testing and analysis will be required as part of the design phase of the project.

5.4 EXPANSIVE SOILS

The clayey soils encountered at the site likely have a medium to high potential for expansion per the UBC. Removal or treatment of potentially expansive soils will need to be considered in foundation design.

5.5 GRADED SLOPES

Graded cut and fill slopes likely can be designed to a slope inclination of 2h:1v or flatter. Retaining structures or reinforced slopes can be provided to allow for steeper slopes, if needed.

5.6 DRAINAGE AND EROSION CONSIDERATIONS

Drainage should be provided such that surface water does not run over slopes or pond on pavements, slabs, or adjacent to foundations. Downspouts should be provided to collect roof drainage and direct the water to drainage pipes or areas away from the building. The sandy soils at the site are particularly vulnerable to erosion as evidenced from the walls of the onsite canyon drainages. Landscaping and maintenance of slopes should be provided to assist vegetation to be established on slopes, and reduce the potential for erosion. The top of slopes should be graded to direct drainage away from the slopes, or be provided with dikes and ditches that will direct surface water to controlled drainage structures. Concentrated flows and runoff should not be permitted to discharge onto slopes. Down drains, solid pipes, or lined ditches should be provided to carry water to the base of slopes. Energy dissipation and erosion control devises should be provided at the outlet of drainage pipes and in areas of concentrated flow and runoff to reduce the potential for erosion.

5.7 CONSTRUCTION CONSIDERATIONS

5.7.1 Excavation

The Paso Robles Formation encountered beneath the project site consists of loose to dense sand and soft to very stiff fine-grained materials. These types of soils likely can be excavated with typical heavy-duty construction equipment in good working order.

5.7.2 Use of On-site Soil

On-site soil consisting of sandy-type material that is free of organics, oversized rocks, pavements, and other deleterious materials should be suitable for use as compacted fill in building and pavement areas. The clayey on-site soils may not be suitable for fill in building and pavement areas due to potentially expansive soils but may be suitable for use as general fill. The on-site soils likely are not suitable for select material such as backfill for pipelines and base for roadways. On-site soil excavated from below the groundwater table (if encountered) will likely not be suitable for compacted fill as excavated. Drying or treating the soils may be needed to reduce the water content of the excavated material and make the material suitable for compaction.

5.7.3 Dewatering

We expect that excavations along the upper central and southern portions of the site will not require dewatering. If the northern portion of the site (near Warden Lake) is developed, excavations extending a few feet or more below existing site grades could encounter groundwater, depending on the groundwater level at the time of construction.

6. CONTINUATION OF SERVICES

The geotechnical considerations in this report are intended for preliminary planning and estimating costs associated with developing the site. The recommendations are preliminary based on our limited geotechnical study. A more comprehensive design-level geotechnical investigation should be completed in support of the final design of the proposed improvements.

7. REFERENCES

Blake, T.F. (2000), "FRISKSP - A computer program for the probabilistic estimation of peak acceleration and uniform hazard spectra using 3-D faults as earthquake sources", Windows Version 4.0.

Boore, D.M., Joyner, W.B., and Fumal, T.E. (1997). “Equations for Estimating Horizontal Response Spectra and Peak Acceleration from Western North American Earthquakes: A Summary of Recent Work.” *Seismological Research Letters*, Volume 68, Number 1, Seismological Society of America

California Building Code (2001). California Code of Regulations, Title 24, Part 2, Volume 2, California Building Standards Commission.

California Division of Mines and Geology (now California Geologic Survey, 1996), *California Fault Parameters*, CDMG Open File Report No. 96-08, Sacramento, California.

California Geologic Survey (1997), *Guidelines for Evaluating and Mitigating Seismic Hazards in California*, Special Publication 117.

California Integrated Seismic Network (CISN, 2003) Internet Report on the 2003 M6.5 San Simeon Earthquake.

County of San Luis Obispo (2006), *San Luis Obispo Planning Area, Rural Land Use Category & Combining Designation Map,* San Luis Obispo County Department of Planning and Building, Environmental Resource Management Division, January.

County of San Luis Obispo (2005), *Guidelines for Engineering Geology Reports,* San Luis Obispo County Department of Planning and Building, Environmental Resource Management Division, January.

County of San Luis Obispo (1998), *Safety Element, San Luis Obispo County General Plan,* San Luis Obispo County Department of Planning and Building, June 30.

Fugro (2004), “Technical Memorandum, Summary of Preliminary Geotechnical Input, Andres Site, Los Osos Wastewater Project, Los Osos Community Services District, San Luis Obispo County, California,” dated June 24.

Hall, C.A., Ernst, W.G., Prior, S.W., and Weise, J.W. (1979), *Geologic Map of the San Luis Obispo-San Simeon Region, California*, United States Geologic Survey MAP I-1097.

Jennings, C.W., 1994, *Fault activity map of California and adjacent areas*, California Division of Mines and Geology, Geologic Map No. 6, Scale 1:750,000.

Lettis, W.R. and Hall, N.T. (1994), “Los Osos Fault Zone, San Luis Obispo County, California”, *Seismotectonics of the Central California Coast Ranges*, Geologic Society of America Special Paper 292.

McGuire, R.K. (1978), "FRISK - Computer program for seismic risk analysis using faults as earthquake sources." *Open File Report No. 78-1007*, United States Geological Survey (USGS), Reston, Virginia.

Sate of California (1990), *Special Studies Zones, San Luis Obispo Quadrangle, Official Map, effective January 1.*

End of Text

PLATES

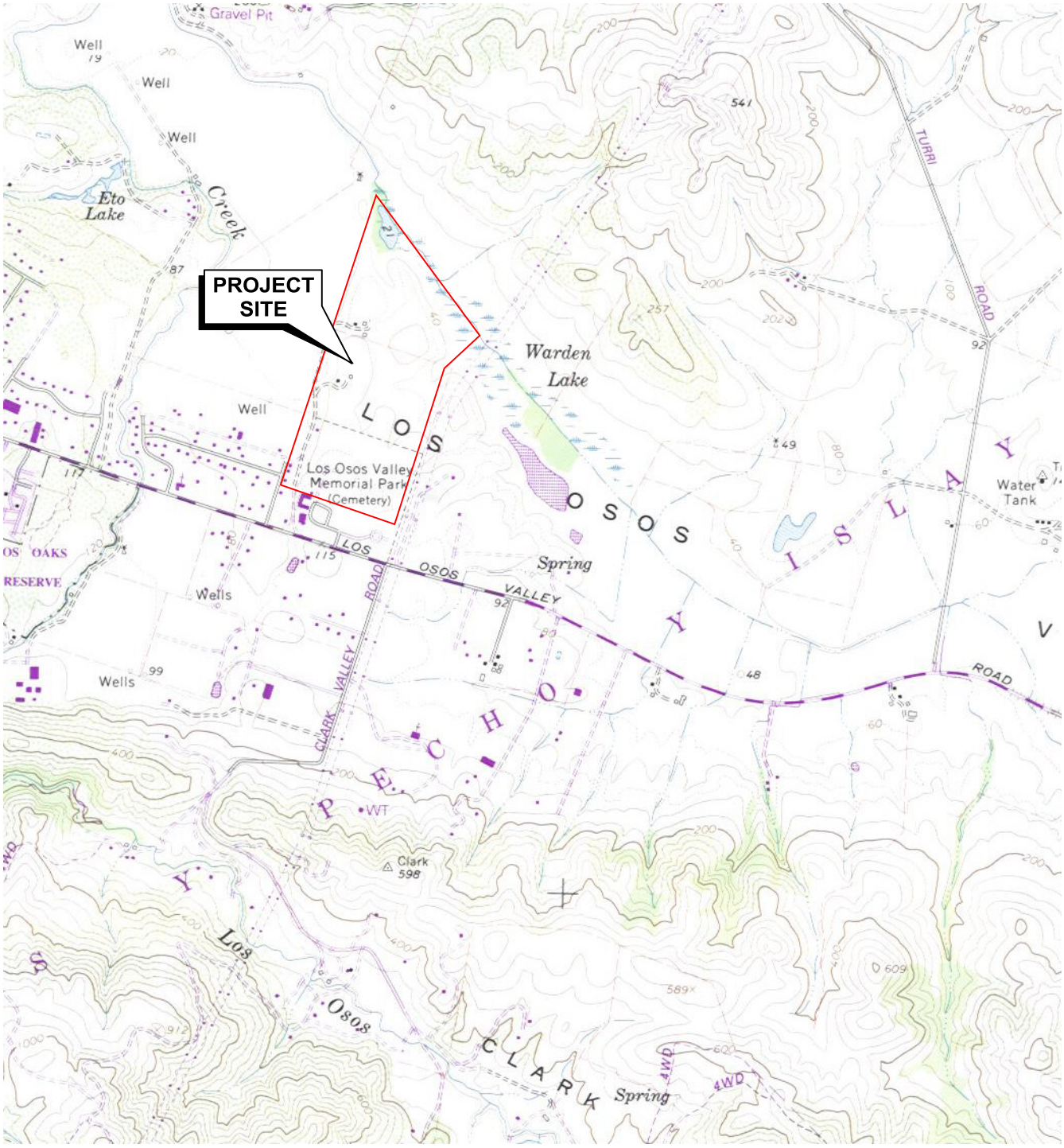

BASE MAP SOURCE: USGS Morro Bay South 7.5' Quadrangle, revised 1994.

NORTH

0 1000 2000

FEET

VICINITY MAP

Los Osos Wastewater Project

San Luis Obispo County, California

PLATE 1

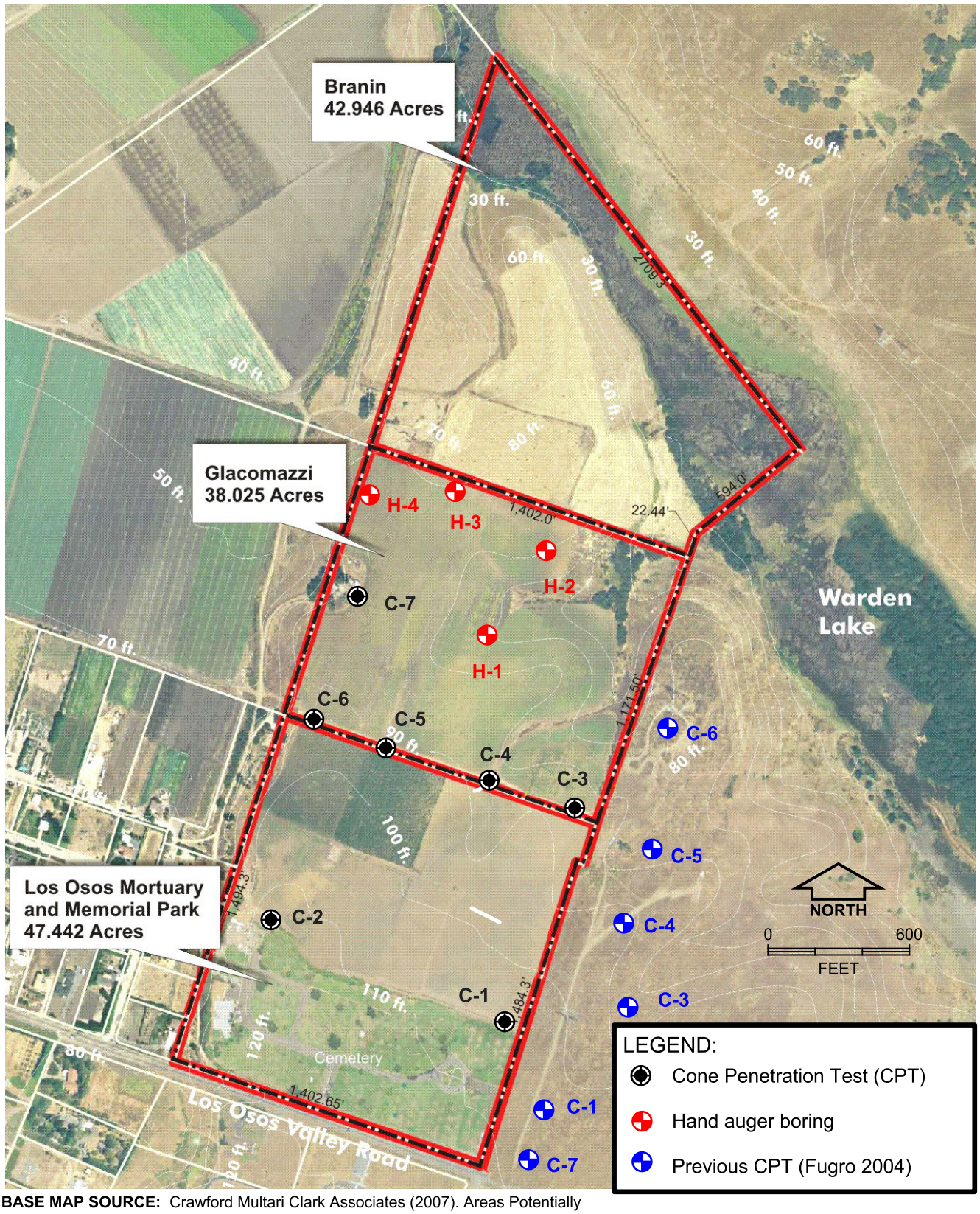

BASE MAP SOURCE: Crawford Multari Clark Associates (2007). Areas Potentially Suitable for Wastewater Facilities.

FIELD EXPLORATION PLAN
Los Osos Wastewater Project
San Luis Obispo County, California

PLATE 2

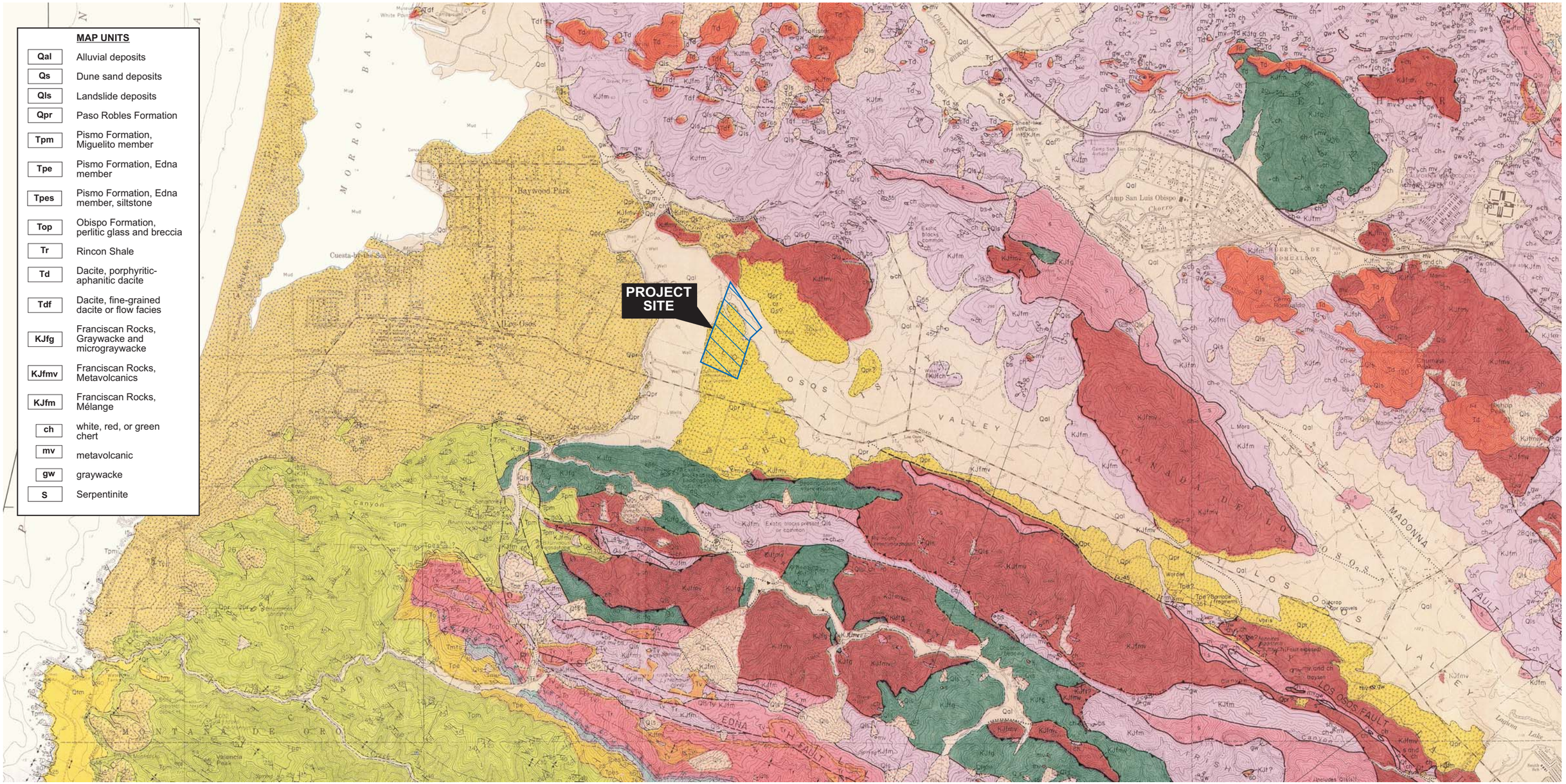

M:\Drafting\JOBFILES\2007\3014.026\3014.026geo.cdr

BASE MAP SOURCE: Geologic Map of the the San Luis Obispo-San Simeon Region, USGS Misc. Investigations Series Map I-1097, Sheet 3 of 3 (Hall, et al., 1979).

LEGEND

Contact - Dashed where approximately located or inferred; queried where doubtful; dotted where concealed

High-angle fault - Dashed where approximately located or inferred; dotted where concealed and inferred; queried where uncertain. Arrows show relative direction of movement on cross sections when known; queried where uncertain.

Thrust or reverse fault - Dashed where approximately located or inferred, dotted where concealed and inferred; queried where concealed or doubtful. Sawteeth on upper plate. Dip of fault plane between 30° and 80°

Photo lineament - Queried where uncertain

Synform - Trace of axis at surface. Dashed where approximately located. Flanks coverate downward in folds and in rocks whose stratigraphic sequence is unknown.

Antiform - Trace of axis at surface. Dashed where approximately located. Flanks diverge downward in folds and in rocks whose stratigraphic sequence is unknown.

Strike and dip of beds uncertain

Marker beds

Conglomerate or gravel bed

Sandstone

Siltstone or diatomaceous

siltstone

Tuff

30 Strike and dip of flow banding

x6193 Megafossil locality - U.C.L.A. locality number

Vollmer Ranch name/property owner

NORTH

0 2000 4000
FEET

REGIONAL GEOLOGIC MAP
Los Osos Wastewater Project
San Luis Obispo County, California

PLATE 3

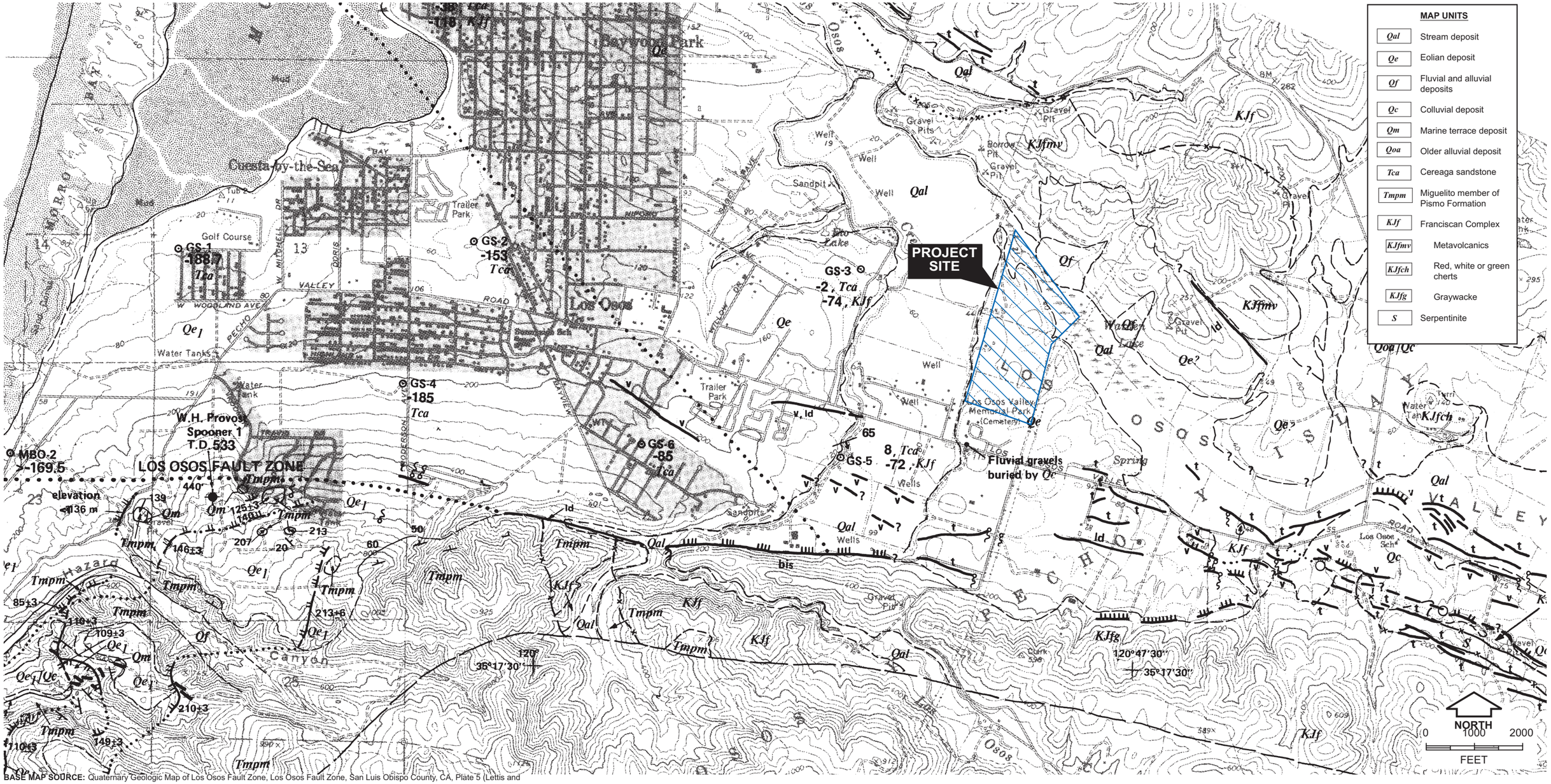

BASE MAP SOURCE: Quaternary Geologic Map of Los Osos Fault Zone, Los Osos Fault Zone, San Luis Obispo County, CA, Plate 5 (Lettis and

M:\Drafting\JOB\FILES\2007\3014.026\3014.026fault.cdr

LEGEND

Fault - Dashed where approximately located; dotted where concealed; U = up/D = down indicates relative sense of displacement; small arrow and number indicate strike and dip of fault exposed in outcrop

Aerial photo lineament - Or fault-related feature; dashed where less distinct; queried where uncertain; hachures indicate topographic scarp and show direction; ld = linear drainage, tc = tonal contrast, v = vegetation lineament, dd = deflected drainage, bis = break in slope, s = saddle, shb = side hill bench

Los Osos fault of Hall (1973) - Dashed where approximately located; dotted where concealed

Edna fault

Indian Knob fault

Other faults

Shoreline angle - Solid where well constrained; double dot dash where concealed; dotted where eroded; altitude shown in meters

Contact - Dashed where approximately located or inferred; queried

Strike and dip of bedding

Syncline - Showing trace of axial surfaces and direction of plunge

Anticline - Showing trace of axial surface and direction of plunge

Borehole - GS-1 - U.S. Geological Survey (unpublished data, G. Yates, Water Resource Division); MBO-2 - California Department of Water Resources (1972); altitude of subsurface of formations shown in meters

Borehole - Completed during this study

Exploratory oil well - Producer, name of well, and depth (meters) are indicated

Closed depression

Spring

Trench location

Bedrock exposure

Limit of mapping

LOS OSOS FAULT ZONE AND LINEAMENTS

Los Osos Wastewater Project
San Luis Obispo County, California

PLATE 4

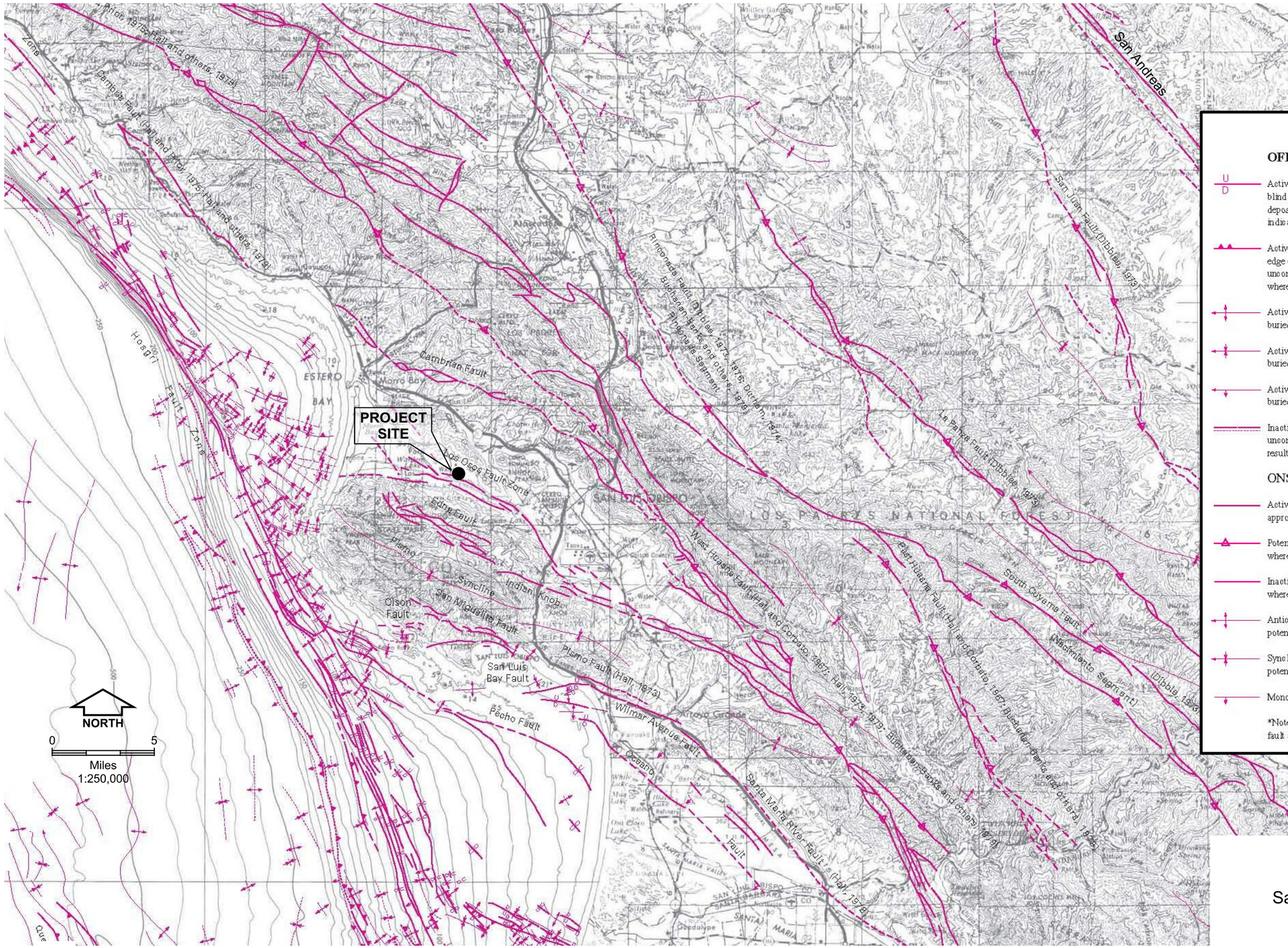

EXPLANATION

OFFSHORE REGION*

U/D — Active or potentially active high angle fault (sea-floor projection of fault tip where blind or buried)—Deforms early/late Pliocene (2.8–3.4 Ma) unconformity or younger deposits or surfaces; U/D (Up/Down) indicates relative sense of displacement, bar indicates dip direction; dashed where approximately located

Active or potentially active low angle fault (sea-floor projection of fault tip or leading edge of ramp where blind or buried)—Deforms early/late Pliocene (2.8–3.4 Ma) unconformity or younger deposits or surfaces; teeth indicate dip direction; dashed where approximately locate

Active or potentially active anticline axial trace (sea-floor projection where buried)—Arrow indicates direction of plunge; dashed where approximately located

Active or potentially active syncline axial trace (sea-floor projection where buried)—Arrow indicates direction of plunge; dashed where approximately located

Active or potentially active monocline axial trace (sea-floor projection where buried)—Arrow indicates direction of plunge; dashed where approximately located

Inactive fault (bold) or fold (light)—Does not deform early/late Pliocene (2.8–3.4 Ma) unconformity; where this unconformity and (or) younger sediments are absent as a result of erosion, structures are mapped as potentially active

ONSHORE REGION*

Active fault trace—Deforms deposits or surfaces ≤500,000 ka; dashed where approximately located

Potentially active fault trace—May deform deposits or surfaces ≤500,000 ka; dashed where approximately located

Inactive active fault trace—Does not deform deposits or surfaces ≤500,000 ka; dashed where approximately located

Anticline axial trace—Arrow indicates direction of plunge; solid where active or potentially active; dotted where inactive

Syncline axial trace—Arrow indicates direction of plunge; solid where active or potentially active; dotted where inactive

Monocline axial trace—Solid where active or potentially active; dotted where inactive

*Note: See text for discussion of mapping techniques and age criteria used to identify fault activity.

REGIONAL FAULT MAP
Los Osos Wastewater Project
San Luis Obispo County, California

BASE MAP: Lettis et al. (2004), Faults and Folds in Onshore and Offsore Regions of South-Central California.

PLATE 5

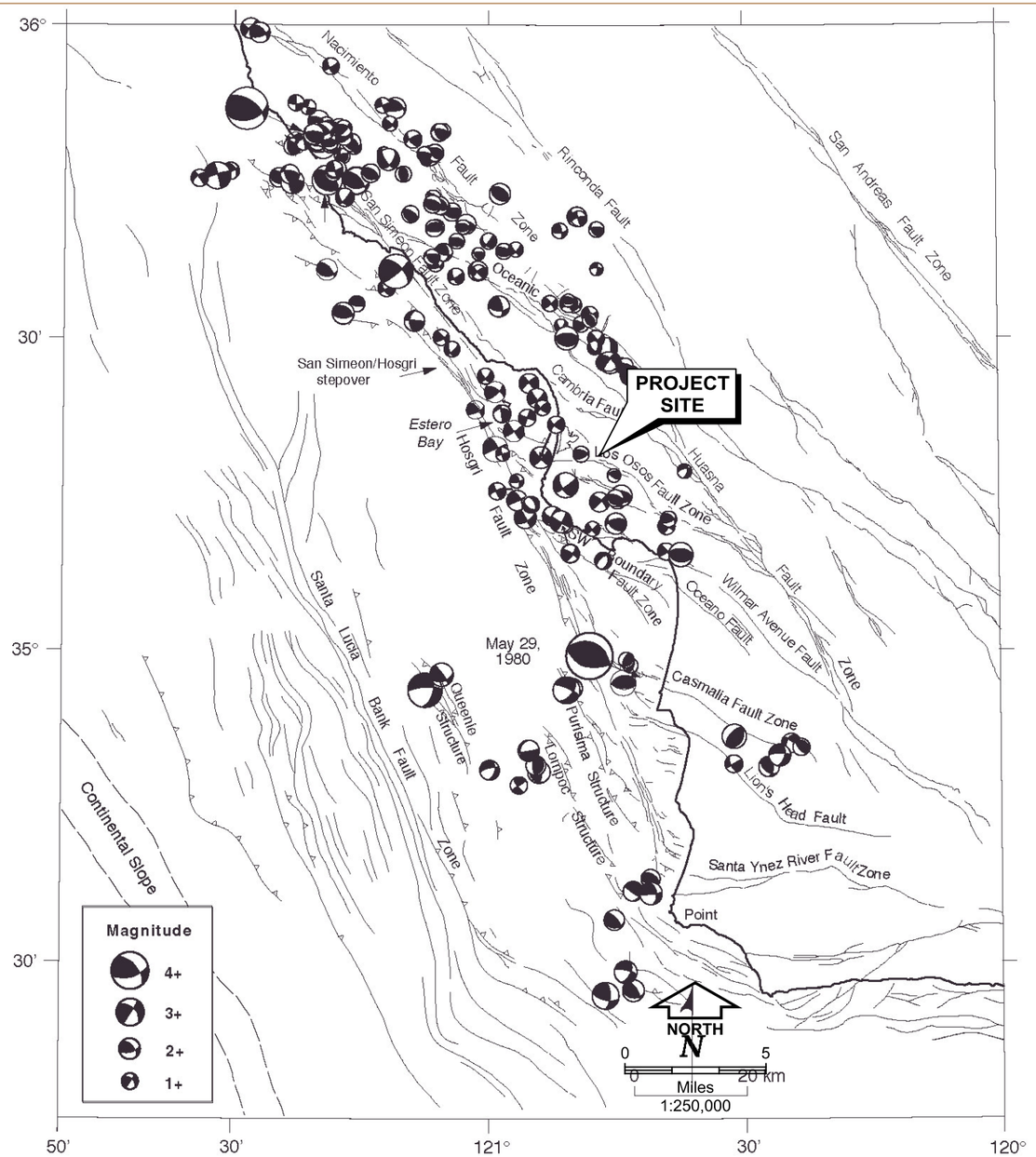

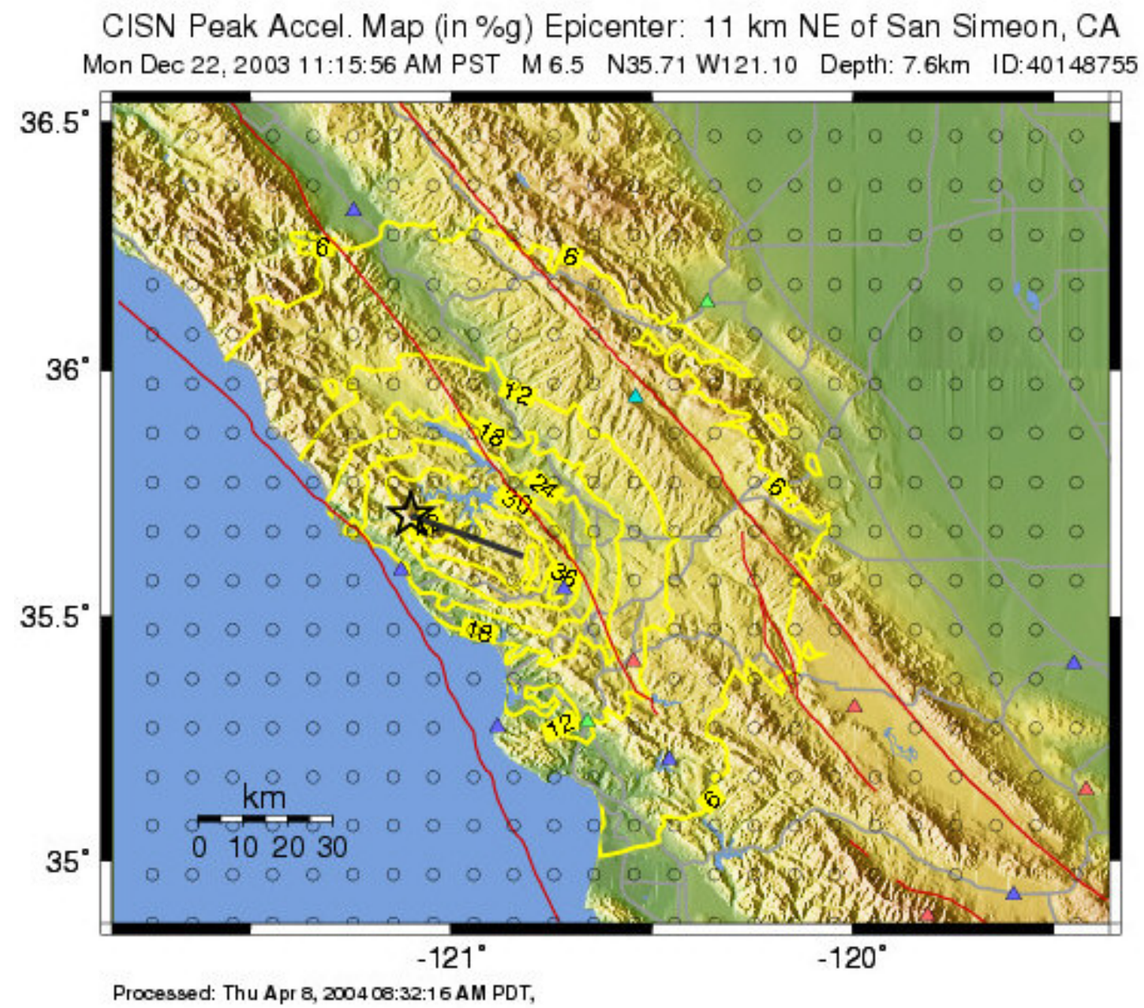

Map showing Quaternary faults and P-wave first-motion focal mechanisms from McLaren and Savage, 2001, (minimum, 20 first motions) from earthquakes along the south central coastal region from Point Piedras Blancas to Point Arguello. Focal mechanisms show (1) predominantly reverse and oblique-reverse motion between the Nacimiento and the San Simeon Fault Zones, (2) a mixture of strike slip, reverse, and oblique motion between the West Huasna-Oceanic and Hosgri Fault Zones, (3) strike slip motion along the northern Hosgri Fault Zone, and (4) reverse motion near the Casmalia Fault Zone and southwest of the Hosgri Fault Zone in the offshore Santa Maria Basin region.

HISTORICAL SEISMICITY MAP
Los Osos Wastwater Project
San Luis Obispo County, California

BASE MAP: Lettis et al. (2004), Quarternary Tectonic Setting of South-Central California.

PLATE 6

APPENDIX A

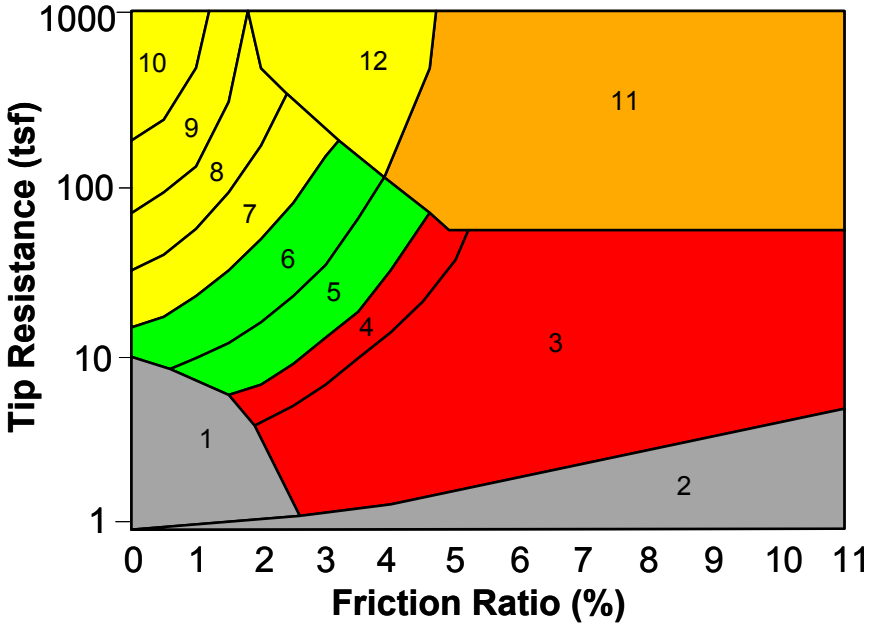

Zone	Soil Behavior Type	U.S.C.S.
1	Sensitive Fine-grained	OL-CH
2	Organic Material	OL-OH
3	Clay	CH
4	Silty Clay to Clay	CL-CH
5	Clayey Silt to Silty Clay	MH-CL
6	Sandy Silt to Clayey Silt	ML-MH
7	Silty Sand to Sandy Silt	SM-ML
8	Sand to Silty Sand	SM-SP
9	Sand	SW-SP
10	Gravelly Sand to Sand	SW-GW
11	Very Stiff Fine-grained *	CH-CL
12	Sand to Clayey Sand *	SC-SM

*overconsolidated or cemented

CPT CORRELATION CHART
(Robertson and Campanella, 1984)

N:\Projects\3014_SLOcounty\3014-026_LosOsosWastewater\Outputs\Working\mxd\CPT\CPTkey.mxd, 06/11/07, CDean

KEY TO CPT LOGS

Los Osos Wasterwater Project
San Luis Obispo County, California

PLATE A-1

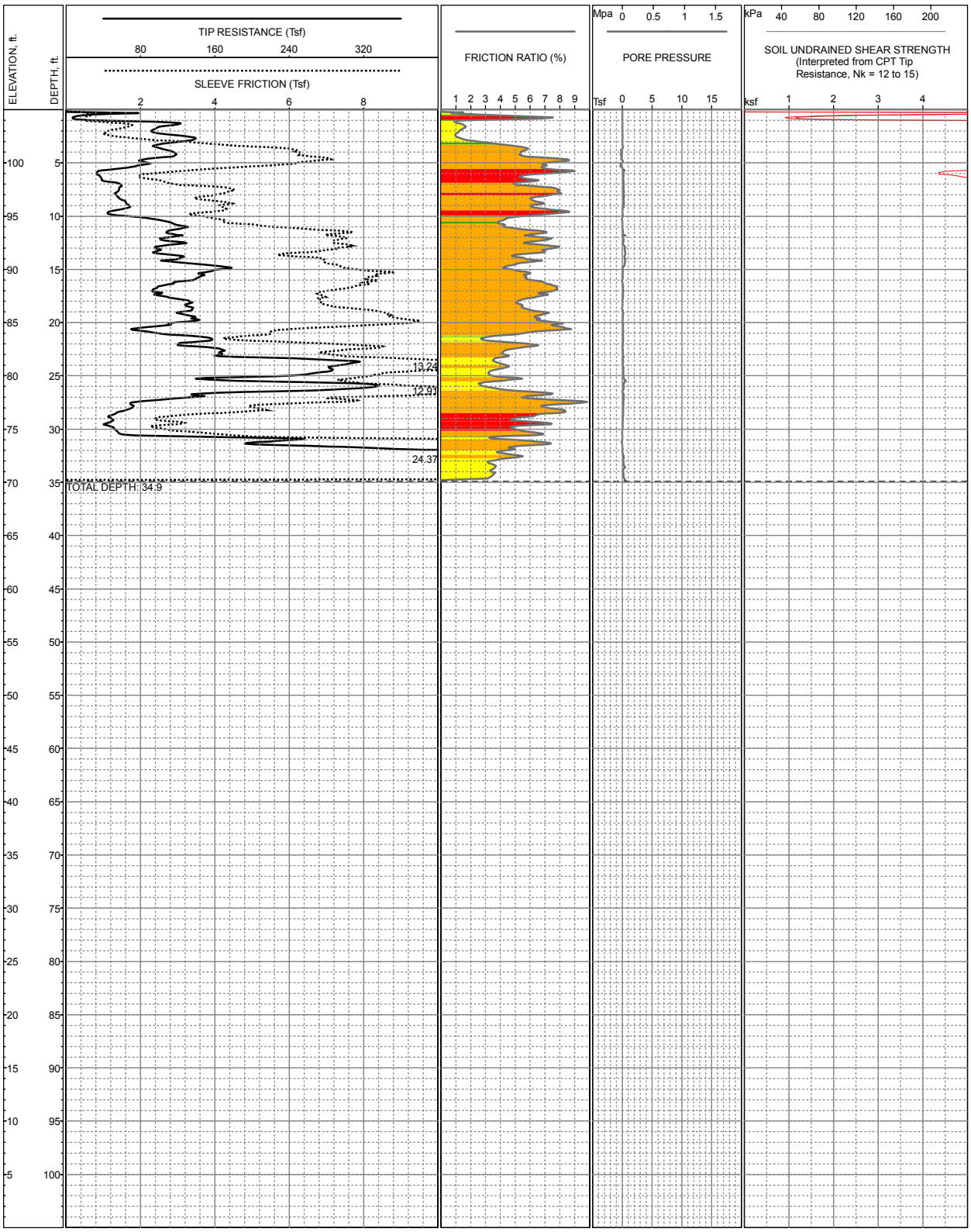

LOCATION: Southeast corner of Los Osos Mortuary property.
SURFACE EL: 105ft +/- (MSL)
COMPLETION DEPTH: 34.9ft
TESTDATE: 5/8/2007

EXPLORATION METHOD: Cone Penetrometer
PERFORMED BY: Fugro Geosciences
REVIEWED BY: J Blanchard

LOG OF C-1

Los Osos Wastewater Project
San Luis Obispo County, California

PLATE A-2

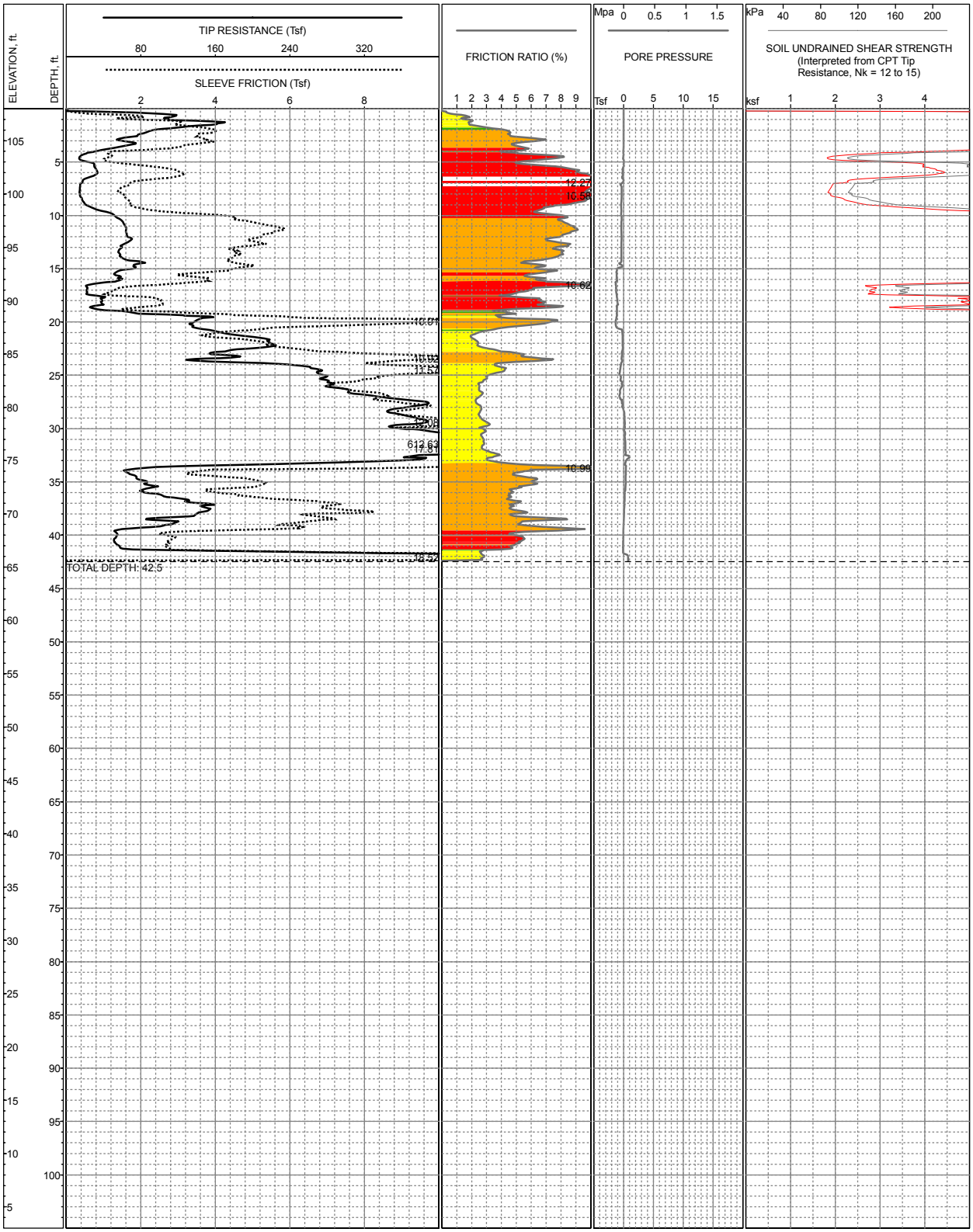

LOCATION: Southwest corner of Los Osos Mortuary property.
SURFACE EL: 108ft +/- (MSL)
COMPLETION DEPTH: 42.5ft
TESTDATE: 5/8/2007

EXPLORATION METHOD: Cone Penetrometer
PERFORMED BY: Fugro Geosciences
REVIEWED BY: J Blanchard

LOG OF C-2

Los Osos Wastewater Project
San Luis Obispo County, California

PLATE A-3

N:\Projects\30 CLIENT\County\3014.026_Los Osos\Wastewater\Inputs\Working\mxd\CPT\CPTLogs.mxd, 31/05/07 11:51, CDean
pw://Carollo/Documents/Client/CA/SLO County/8930A10/Deliverables/Report/Appendix E.pdf (FINAL)

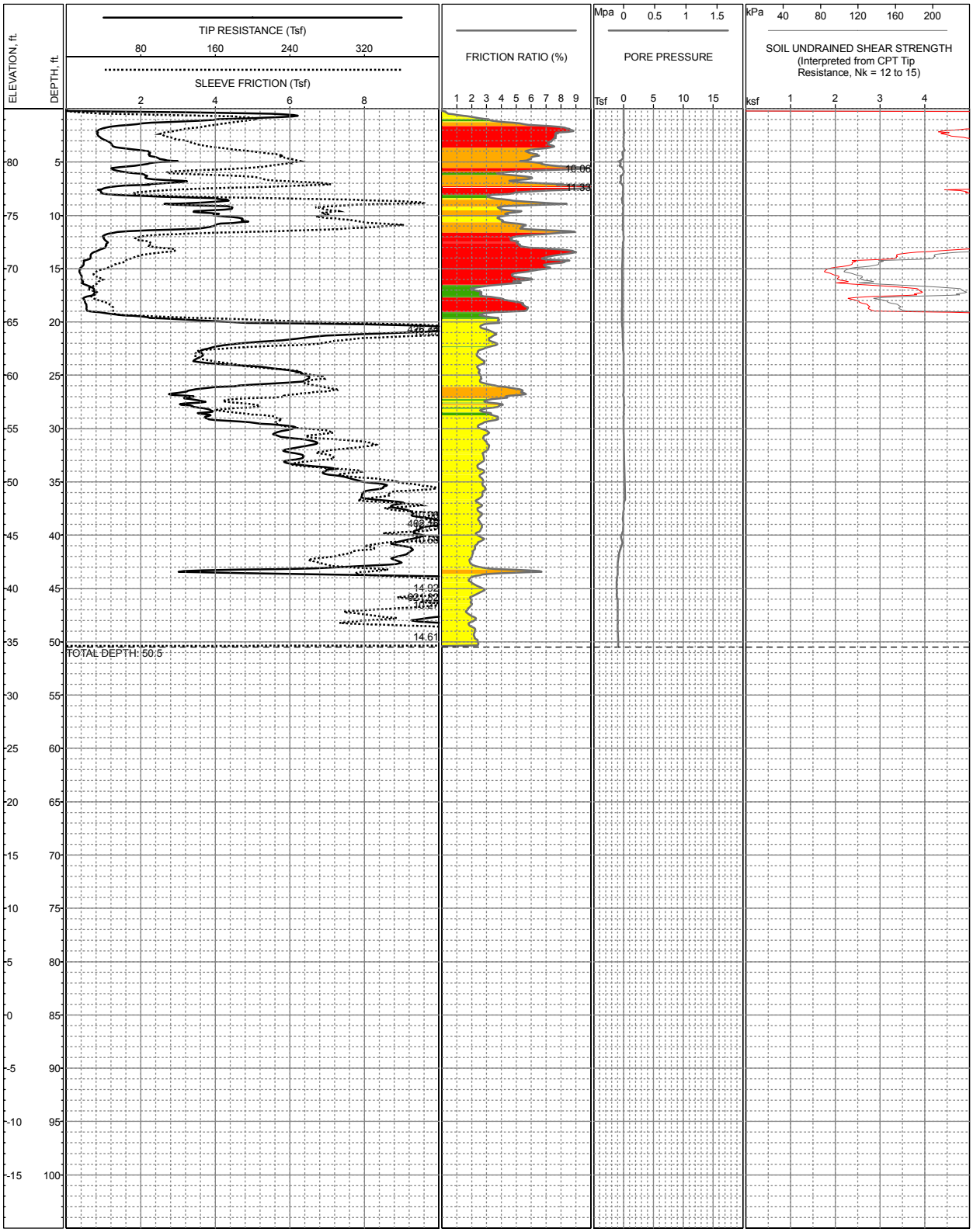

LOCATION: Southeast corner of Giacomazzi property.
SURFACE EL: 85ft +/- (MSL)
COMPLETION DEPTH: 50.5ft
TESTDATE: 5/8/2007

EXPLORATION METHOD: Cone Penetrometer
PERFORMED BY: Fugro Geosciences
REVIEWED BY: J Blanchard

LOG OF C-3

Los Osos Wastewater Project
San Luis Obispo County, California

PLATE A-4

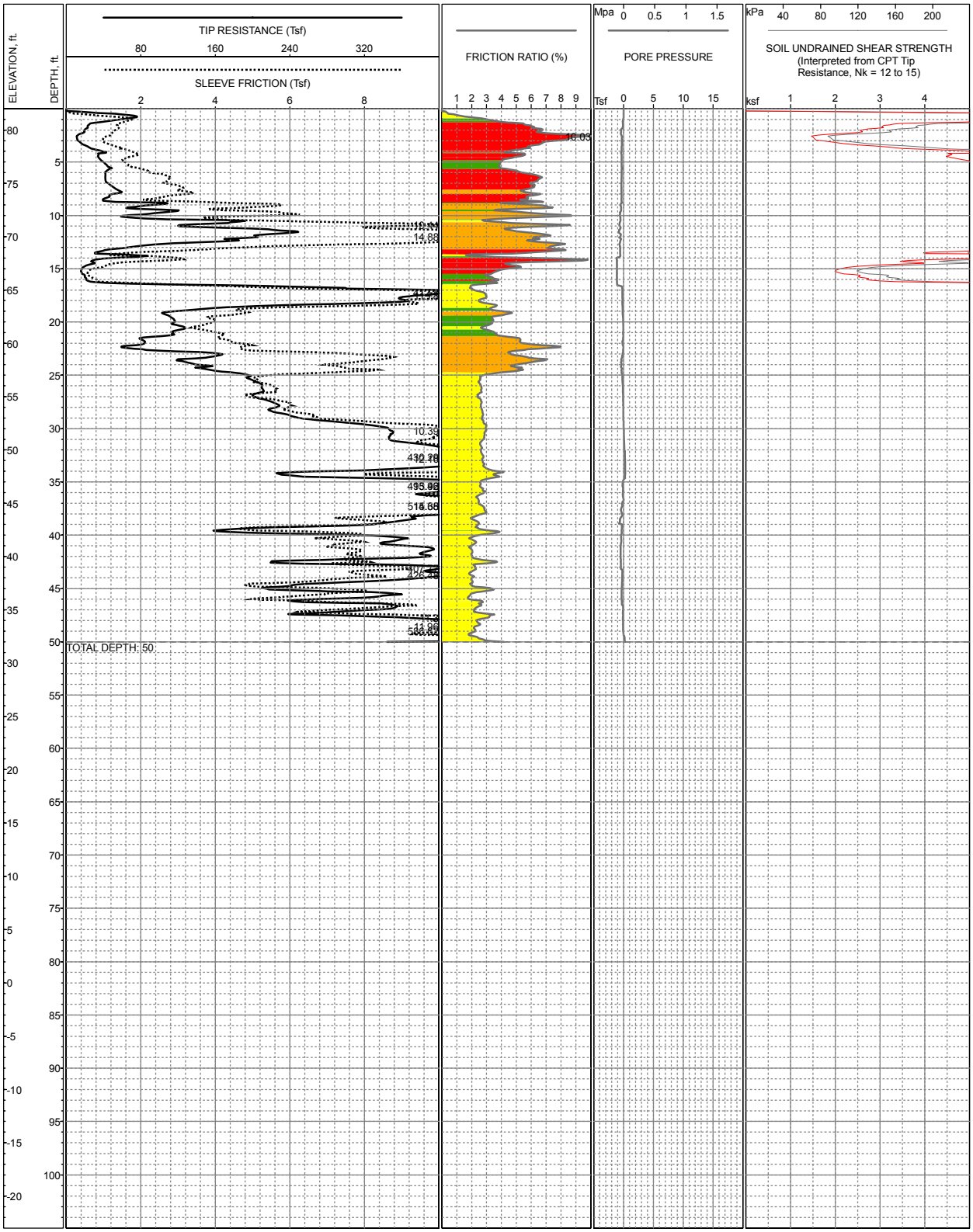

LOCATION: Southern access road of Giacomazzi property, 500 feet west of southeast corner.
SURFACE EL: 82ft +/- (MSL)
COMPLETION DEPTH: 50ft
TESTDATE: 5/8/2007

EXPLORATION METHOD: Cone Penetrometer
PERFORMED BY: Fugro Geosciences
REVIEWED BY: J Blanchard

LOG OF C-4

Los Osos Wastewater Project
San Luis Obispo County, California

PLATE A-5

N:\Projects\30 CALIFORNIA\3014.026_Los Osos\Wastewater\Inputs\Working\mxd\CPT\CPTLogs.mxd, 31/05/07 11:51, CDean
pw://Carollo/Documents/Client/CA/SLO County/8930A10/Deliverables/Report/Appendix E.pdf (FINAL)

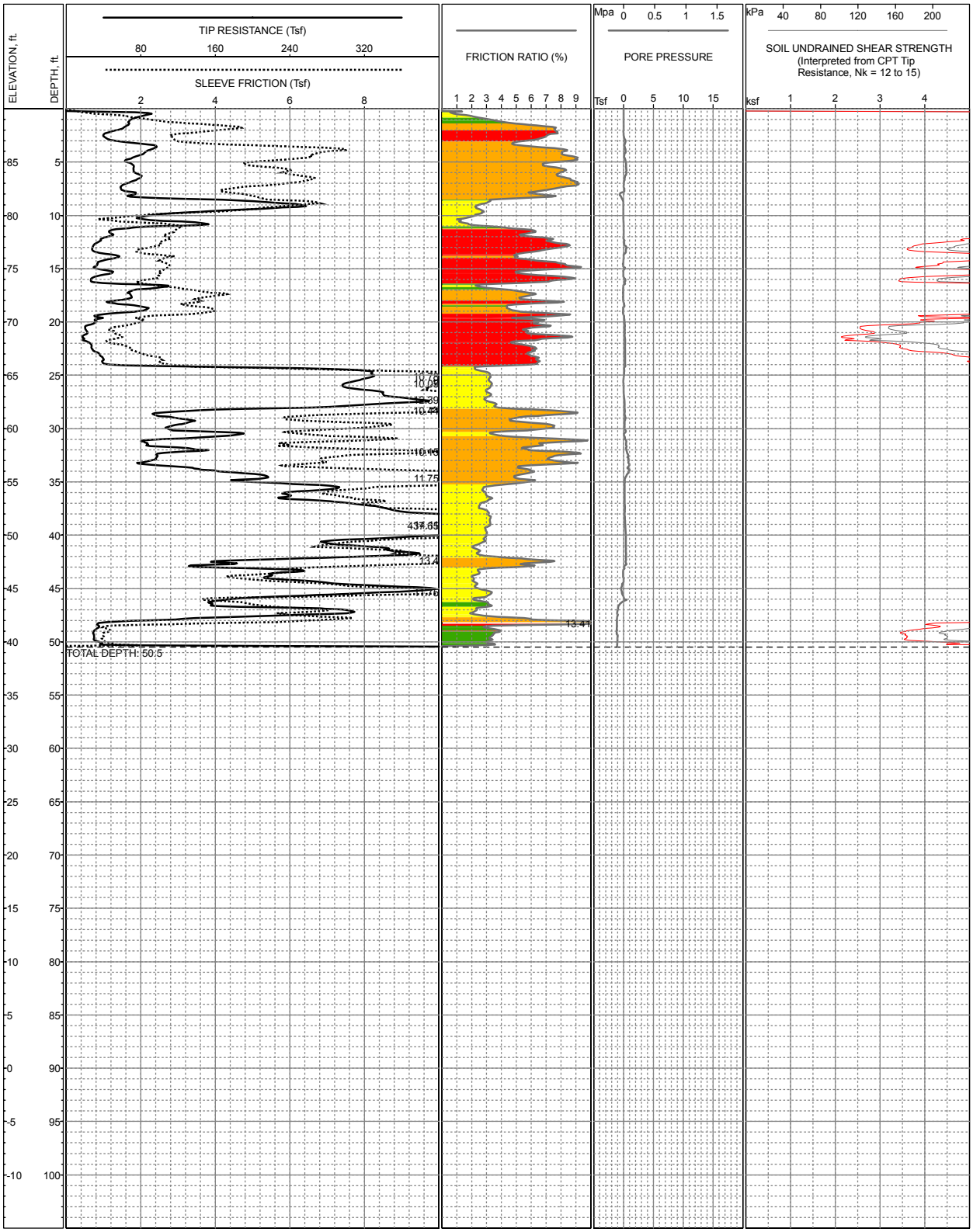

LOCATION: Southern access road of Giacomazzi property, 900 feet west of southeast corner.
SURFACE EL: 90ft +/- (MSL)
COMPLETION DEPTH: 50.5ft
TESTDATE: 5/8/2007

EXPLORATION METHOD: Cone Penetrometer
PERFORMED BY: Fugro Geosciences
REVIEWED BY: J Blanchard

LOG OF C-5

Los Osos Wastewater Project
San Luis Obispo County, California

PLATE A-6

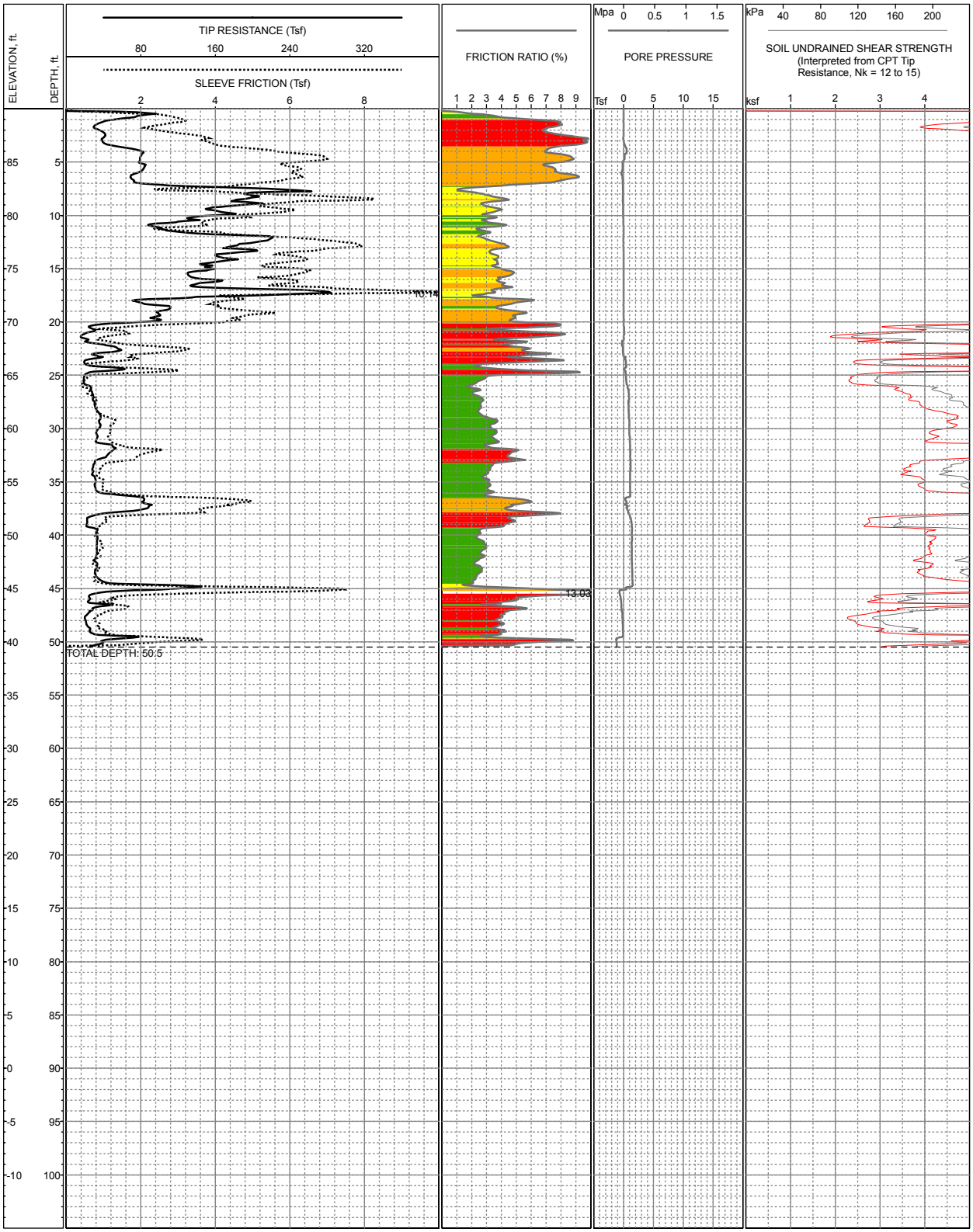

LOCATION: Southwest corner of Giacomazzi property.
SURFACE EL: 90ft +/- (MSL)
COMPLETION DEPTH: 50.5ft
TESTDATE: 5/8/2007

EXPLORATION METHOD: Cone Penetrometer
PERFORMED BY: Fugro Geosciences
REVIEWED BY: J Blanchard

LOG OF C-6

Los Osos Wastewater Project
San Luis Obispo County, California

PLATE A-7

N:\Projects\30 CALIFORNIA\3014 026_Los Osos Wastewater\Inputs\Working\mxd\CPT\CPTLogs.mxd, 31/05/07 11:52, CDean
pw://Carollo/Documents/Client/CA/SLO County/8930A10/Deliverables/Report/Appendix E.pdf (FINAL)

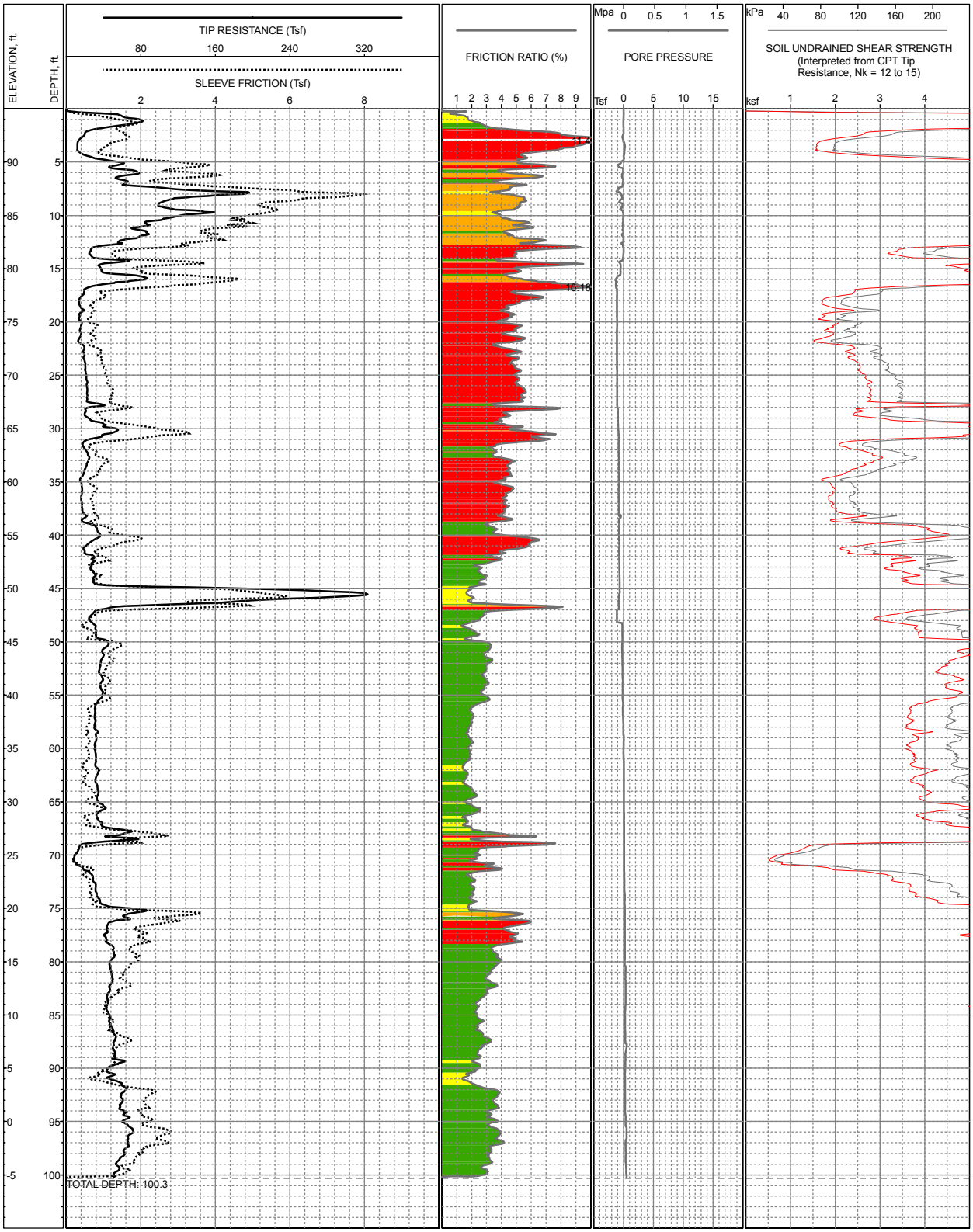

LOCATION: Eastern edge of Giacomazzi property, adjacent to existing garage.
SURFACE EL: 95ft +/- (MSL)
COMPLETION DEPTH: 100.3ft
TESTDATE: 5/8/2007

EXPLORATION METHOD: Cone Penetrometer
PERFORMED BY: Fugro Geosciences
REVIEWED BY: J Blanchard

LOG OF C-7

Los Osos Wastewater Project
San Luis Obispo County, California

PLATE A-8

APPENDIX B

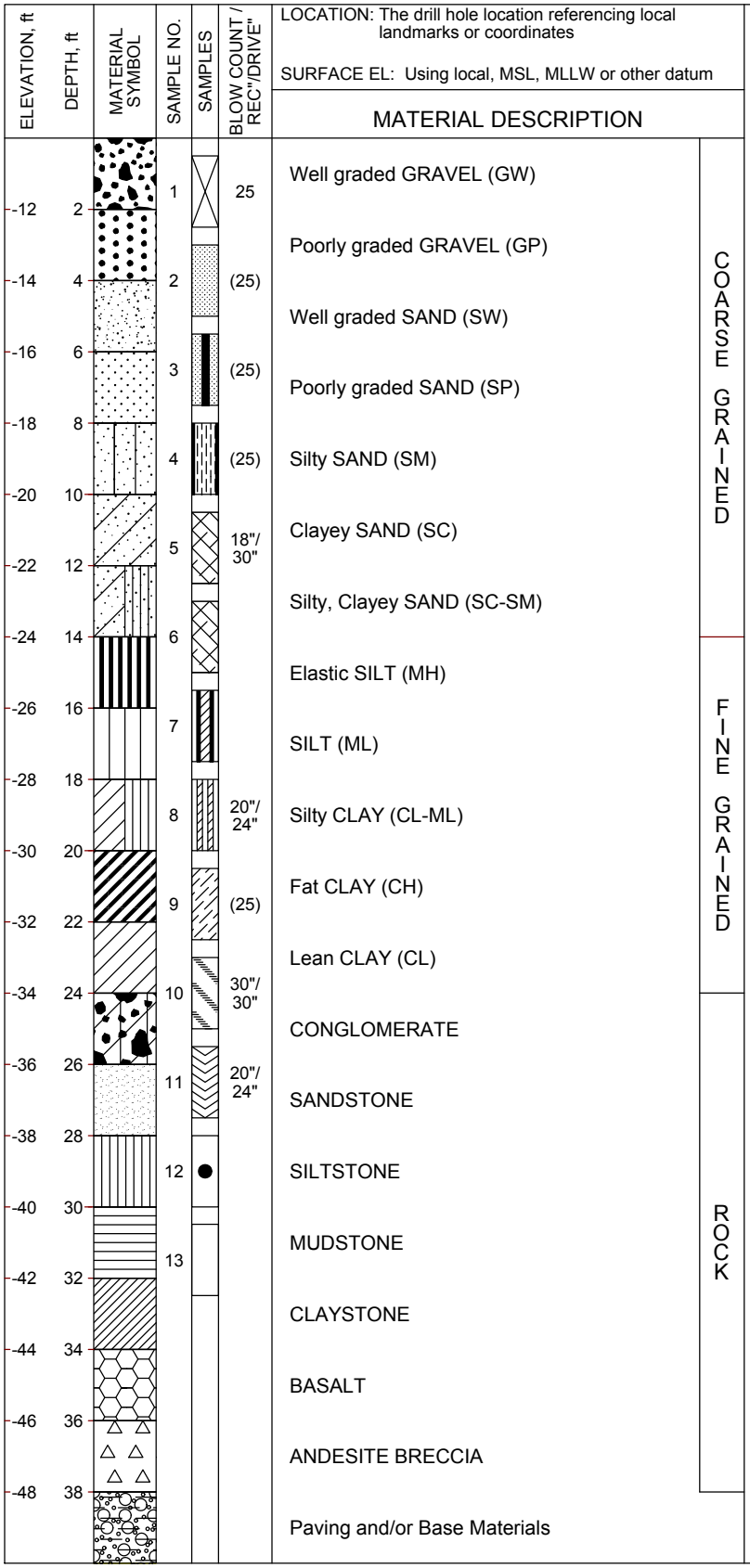

General Notes

Soil Texture Symbol

Sloped line in symbol column indicates transitional boundary

Samplers and sampler dimensions
(unless otherwise noted in report text) are as follows:

Symbol for:

1	SPT Sampler, driven 1-3/8" ID, 2" OD
2	CA Liner Sampler, driven 2-3/8" ID, 3" OD
3	CA Liner Sampler, disturbed 2-3/8" ID, 3" OD
4	Thin-walled Tube, pushed 2-7/8" ID, 3" OD
5	Bulk Bag Sample (from cuttings)
6	CA Liner Sampler, Bagged
7	Hand Auger Sample
8	CME Core Sample
9	Pitcher Sample
10	Lexan Sample
11	Vibracore Sample
12	No Sample Recovered
13	Sonic Soil Core Sample

Sampler Driving Resistance

Number of blows with 140 lb. hammer, falling 30" to drive sampler 1 ft. after seating sampler 6"; for example,

Blows/ft	Description
25	25 blows drove sampler 12" after initial 6" of seating
86/11"	After driving sampler the initial 6" of seating, 36 blows drove sampler through the second 6" interval, and 50 blows drove the sampler 5" into the third interval
50/6"	50 blows drove sampler 6" after initial 6" of seating
Ref/3"	50 blows drove sampler 3" during initial 6" seating interval

Blow counts for California Liner Sampler shown in ( )

Length of sample symbol approximates recovery length

Classification of Soils per ASTM D2487 or D2488

Geologic Formation noted in bold font at the top of interpreted interval

Strength Legend

Q = Unconfined Compression
u = Unconsolidated Undrained Triaxial
t = Torvane
p = Pocket Penetrometer
m = Miniature Vane

Water Level Symbols

- Initial or perched water level
- Final ground water level
- Seepages encountered

Rock Quality Designation (RQD) is the sum of recovered core pieces greater than 4 inches divided by the length of the cored interval.

KEY TO TERMS & SYMBOLS USED ON LOGS

BORING LOG KEY VENTURA F:\FUGRO SLO GEOTECH DOCUMENTS\GINT\GINT PROJECTS\3014.026.GPJ 6/18/07 10:35 a

PLATE B-1

LOCATION: Giacomazzi property, near center of property.

SURFACE EL: 70 ft +/- (rel. MSL datum)

ELEVATION, ft	DEPTH, ft	MATERIAL SYMBOL	SAMPLE NO.	SAMPLERS	SAMPLER BLOW COUNT	MATERIAL DESCRIPTION	UNIT WET WEIGHT, pcf	UNIT DRY WEIGHT, pcf	WATER CONTENT, %	% PASSING #200 SIEVE	LIQUID LIMIT, %	PLASTICITY INDEX, %	UNDRAINED SHEAR STRENGTH, S_u, ksf
						PASO ROBLES FORMATION (Qtp) Topsoil: Sandy Fat CLAY (CH): firm, brown, dry							
						- moist							
68	2					- grades to Clayey SAND (SC): medium dense, brown, moist							
						Lean CLAY (CL): stiff, red-brown, moist							
66	4												
						Lean CLAY with sand (CL): stiff, red-brown, moist							
						Lean CLAY (CL): stiff to very stiff, red-brown, moist							
64	6												
						Clayey SAND (SC): medium dense, brown, moist							
62	8					Lean CLAY with sand (CL): very stiff, red-brown, moist, iron oxide staining							
60	10												
58	12												
56	14												

The log and data presented are a simplification of actual conditions encountered at the time of drilling at the drilled location. Subsurface conditions may differ at other locations and with the passage of time.

COMPLETION DEPTH: 12.5 ft
DEPTH TO WATER: Not Encountered
BACKFILLED WITH: Cuttings
DRILLING DATE: May 8, 2007

DRILLING METHOD: 3-inch-dia. Hand Auger
HAMMER TYPE:
DRILLED BY: Fugro West, Inc.
LOGGED BY: CLovato
CHECKED BY: C Lovato

LOG OF NO. H-1

Los Osos Wastewater Project
San Luis Obispo County, California

LOCATION: Giacomazzi property, northeast corner, 145 feet south of property line.

SURFACE EL: 80 ft +/- (rel. MSL datum)

ELEVATION, ft	DEPTH, ft	MATERIAL SYMBOL	SAMPLE NO.	SAMPLERS	SAMPLER BLOW COUNT	MATERIAL DESCRIPTION	UNIT WET WEIGHT, pcf	UNIT DRY WEIGHT, pcf	WATER CONTENT, %	% PASSING #200 SIEVE	LIQUID LIMIT, %	PLASTICITY INDEX, %	UNDRAINED SHEAR STRENGTH, S_u, ksf
						PASO ROBLES FORMATION (Qtp) Topsoil: Sandy fat CLAY (CH): firm, brown, dry							
						- moist, very stiff							
78	2												p 4.5+
						- with pockets of light brown clayey sand, fine to medium grain size							
						Clayey SAND (SC): medium dense to dense, light yellowish brown with light gray mottling, moist, iron oxide staining							
76	4					Poorly-graded SAND with clay (SP-SC): very dense, light yellowish brown, moist, iron oxide staining with occasional chert gravel to 1" diameter (red-brown, iron oxide stained)							
74	6												
72	8												
70	10												
68	12												
66	14												

The log and data presented are a simplification of actual conditions encountered at the time of drilling at the drilled location. Subsurface conditions may differ at other locations and with the passage of time.

COMPLETION DEPTH: 10.0 ft
DEPTH TO WATER: Not Encountered
BACKFILLED WITH: Cuttings
DRILLING DATE: May 8, 2007

DRILLING METHOD: 3-inch-dia. Hand Auger
HAMMER TYPE:
DRILLED BY: Fugro West, Inc.
LOGGED BY: CLovato
CHECKED BY: C Lovato

LOG OF NO. H-2

Los Osos Wastewater Project
San Luis Obispo County, California

LOCATION: Giacomazzi property, northern property line.

SURFACE EL: 80 ft +/- (rel. MSL datum)

ELEVATION, ft	DEPTH, ft	MATERIAL SYMBOL	SAMPLE NO.	SAMPLERS	SAMPLER BLOW COUNT	MATERIAL DESCRIPTION	UNIT WET WEIGHT, pcf	UNIT DRY WEIGHT, pcf	WATER CONTENT, %	% PASSING #200 SIEVE	LIQUID LIMIT, %	PLASTICITY INDEX, %	UNDRAINED SHEAR STRENGTH, S_u, ksf
						PASO ROBLES FORMATION (Qtp) Topsoil: Clayey SAND (SC): medium dense, brown, moist							
78	2					Sandy lean CLAY (CL): firm, light brown with gray and red-brown mottling, moist							
						- stiff, gray							
76	4												
													p 3.0
						- very stiff, red-brown							
74	6												
72	8												
70	10												
68	12												
66	14												

The log and data presented are a simplification of actual conditions encountered at the time of drilling at the drilled location. Subsurface conditions may differ at other locations and with the passage of time.

COMPLETION DEPTH: 10.0 ft
DEPTH TO WATER: Not Encountered
BACKFILLED WITH: Cuttings
DRILLING DATE: May 8, 2007

DRILLING METHOD: 3-inch-dia. Hand Auger
HAMMER TYPE:
DRILLED BY: Fugro West, Inc.
LOGGED BY: CLovato
CHECKED BY: C Lovato

LOG OF NO. H-3

Los Osos Wastewater Project
San Luis Obispo County, California

LOCATION: Giacomazzi property, western property line.

SURFACE EL: 82 ft +/- (rel. MSL datum)

ELEVATION, ft	DEPTH, ft	MATERIAL SYMBOL	SAMPLE NO.	SAMPLERS	SAMPLER BLOW COUNT	MATERIAL DESCRIPTION	UNIT WET WEIGHT, pcf	UNIT DRY WEIGHT, pcf	WATER CONTENT, %	% PASSING #200 SIEVE	LIQUID LIMIT, %	PLASTICITY INDEX, %	UNDRAINED SHEAR STRENGTH, S_u, ksf
						PASO ROBLES FORMATION (Qtp) Topsoil: Sandy lean CLAY (CL): firm, dark brown, moist							
						Lean CLAY with sand (CL): stiff, brown, with dark brown mottling, moist							
80	2					- dark brown, with gypsum							
						- brown							
78	4					- very stiff							
76	6												
74	8												
						Clayey SAND with gravel (SC): dense, red-brown, moist							
72	10					- grades to sandy CLAY (CL)/Clayey SAND (SC)							
70	12												
68	14												

The log and data presented are a simplification of actual conditions encountered at the time of drilling at the drilled location. Subsurface conditions may differ at other locations and with the passage of time.

COMPLETION DEPTH: 12.0 ft
DEPTH TO WATER: Not Encountered
BACKFILLED WITH: Cuttings
DRILLING DATE: May 8, 2007

DRILLING METHOD: 3-inch-dia. Hand Auger
HAMMER TYPE:
DRILLED BY: Fugro West, Inc.
LOGGED BY: JHollenback
CHECKED BY: C Lovato

LOG OF NO. H-4

Los Osos Wastewater Project
San Luis Obispo County, California

BORING LOG VENTURA F:\FUGRO SLO GEOTECH DOCUMENTS\GINT\GINT PROJECTS\3014.026.GPJ 6/19/07 10:28 a

PLATE B-5