Cannon

Project Name / #:

Attendees:

Typical Well Pumping Unit - Estimated Dimensions & Footprint

Date: 3/17/10

Subject:

Location:

Page:

Unit: C-320D-246-74

Max Height (H dim.): 22'-7"

Skid Length (F dim): 24'-2"

Skid Width (M dim): 4'-10"

* Add ≈1'-0" around perimeter of skid

Foundation Dimensions: 6'-10" x 26'-2"

Total Unit Length (F + R dims): 29'-3"

Total Unit Width (X dim): 7'-2"

Total Unit Footprint: 7'-2" x 30'-3"

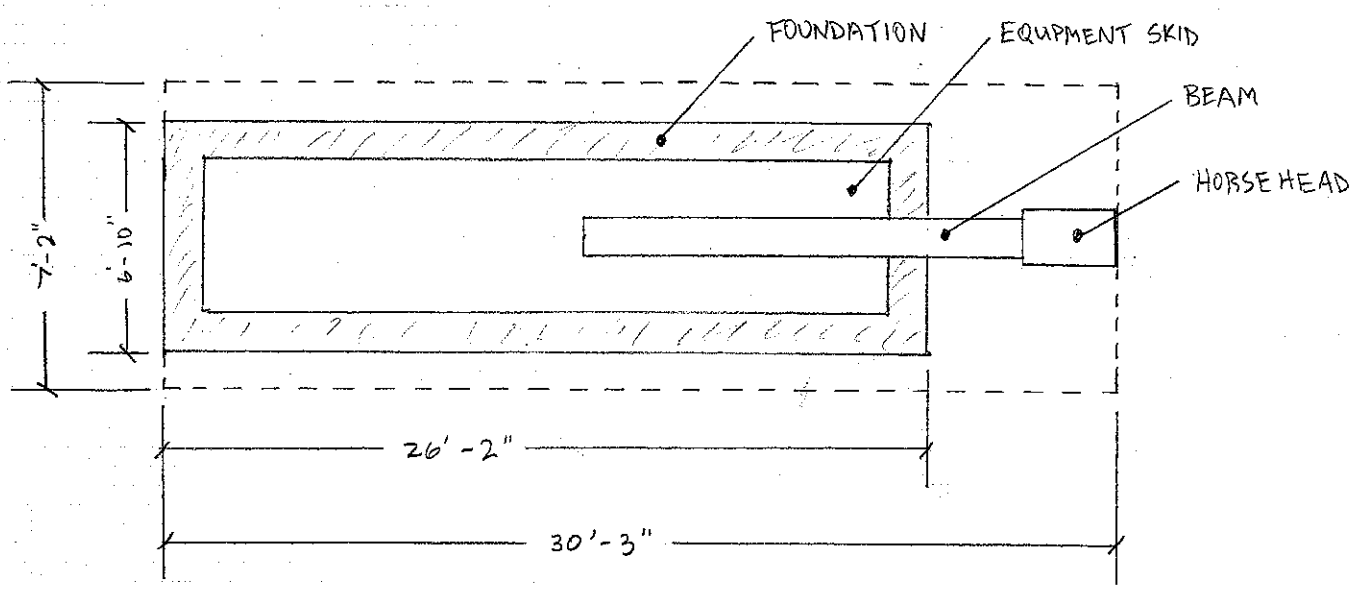

(NOT TO SCALE)

NH

LUFKIN
ENERGY PRODUCTS GROUP

CONVENTIONAL CRANK BALANCED PUMPING UNITS

450 Gears Road, Suite 550
Houston, Texas 77067
Phone: 281/875-6500
Fax: 281/875-4236
www.lufkin.com

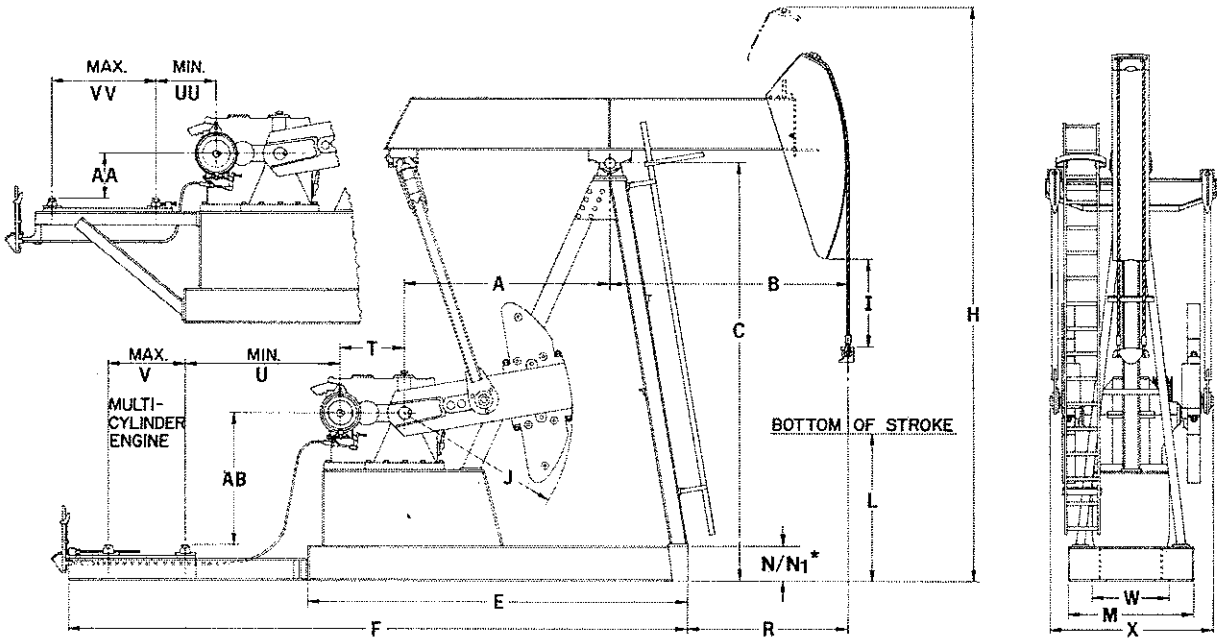

Dimensional Data (inches)

Unit Size*	A	B	C	E	F	H	I	J	L	M	N	N_1	R	T	U	V	W	X	AA	AB	UU	VV
C-1824D-305-240	120.00	228.00	340.00	263.50	396.50	545.00	25.50	110.00	64.00	80.25	-	24.50	161.00	58.88	92.38	52.00	50.00	120.00	51.69	90.88	24.13	57.00
C-1824D-365-216	120.00	235.00	286.00	263.50	396.50	483.00	19.56	110.00	40.50	80.25	-	24.50	168.00	58.88	92.38	52.00	50.00	120.00	51.69	90.88	24.13	57.00
C-1824D-365-192	120.00	210.00	286.00	263.50	396.50	464.00	18.81	110.00	63.88	80.25	-	24.50	143.00	58.88	92.38	52.00	50.00	120.00	51.69	90.88	24.13	57.00
C-1280D-305-240	120.00	228.00	340.00	263.50	396.50	545.00	26.31	110.00	63.21	80.25	-	24.50	161.00	52.50	98.75	52.00	50.00	106.00	51.69	90.88	30.50	57.00
C-1280D-427-192	120.00	210.00	286.50	263.50	396.50	464.50	18.19	110.00	65.38	80.25	-	24.50	143.00	52.50	98.75	52.00	50.00	106.00	51.69	90.88	30.50	57.00
C-1280D-365-192	120.00	210.00	286.00	263.50	396.50	464.00	18.81	110.00	63.88	80.25	-	24.50	143.00	52.50	98.75	52.00	50.00	106.00	51.69	90.88	30.50	57.00
C-912D-305-240	120.00	228.00	340.00	247.50	396.50	545.00	25.50	110.00	64.00	80.25	-	24.50	161.56	48.50	91	52.00	50.00	98.50	51.69	90.88	19.25	57.00
C-912D-365-192	120.00	210.00	286.00	247.50	380.50	464.00	18.81	110.00	63.63	80.25	24.50	21.00	143.56	48.50	87.50	52.00	46.75	98.50	51.69	90.88	19.25	57.00
C-912D-305-192	120.00	210.00	286.00	247.50	380.50	464.00	18.81	110.00	63.63	80.25	24.50	21.00	143.56	48.50	87.50	52.00	46.75	98.50	51.69	90.88	19.25	57.00
C-912D-365-168	120.00	210.00	262.00	224.50	357.50	421.50	20.50	110.00	62.25	76.00	24.13	16.13	166.50	48.50	87.50	52.00	46.75	98.50	51.75	90.88	19.25	57.00
C-912D-305-168	120.00	210.00	262.00	224.50	357.50	421.50	20.50	110.00	62.00	76.00	24.13	16.13	166.50	48.50	87.50	52.00	46.75	98.50	51.75	90.88	19.25	57.00
C-912D-427-144	120.00	180.00	262.00	224.50	357.50	400.00	32.75	110.00	74.25	76.00	24.13	16.13	136.50	48.50	87.50	52.00	46.75	98.50	51.75	90.88	19.25	57.00
C-912D-365-144	120.00	180.00	262.00	224.50	357.50	400.00	32.75	110.00	74.25	76.00	24.13	16.13	136.50	48.50	87.50	52.00	46.75	98.50	51.75	90.88	19.25	57.00
C-640D-365-168	120.00	210.00	262.00	221.00	354.00	421.50	20.50	110.00	62.25	76.00	24.13	16.13	166.50	41.50	91.00	52.00	46.75	98.50	51.75	90.88	23.00	57.00
C-640D-305-168	120.00	210.00	262.00	221.00	354.00	421.50	20.50	110.00	62.25	76.00	24.13	16.13	166.50	41.50	91.00	52.00	46.75	98.50	51.75	90.88	23.00	57.00
C-640D-365-144	120.00	180.00	262.00	221.00	354.00	400.00	32.75	110.00	74.25	76.00	24.13	16.13	136.50	41.50	91.00	52.00	46.75	98.50	51.75	90.88	23.00	57.00
C-640D-305-144	120.00	180.00	260.00	220.75	353.75	398.00	32.75	110.00	72.50	76.00	21.13	16.13	136.88	41.50	91.13	52.00	46.75	98.50	51.75	90.88	23.00	57.00
C-640D-256-144	120.00	180.00	260.00	220.75	353.75	398.00	32.75	110.00	72.50	76.00	21.13	16.13	136.88	41.50	91.13	52.00	46.75	98.50	51.75	90.88	23.00	57.00
C-640D-365-120	120.00	152.00	260.00	220.75	353.75	379.00	54.50	110.00	75.50	76.00	21.13	16.13	108.88	41.50	91.13	52.00	46.75	98.50	51.75	90.88	23.00	57.00
C-640D-305-120	111.00	155.00	234.00	208.63	326.63	351.00	25.00	95.00	78.25	70.00	21.00	16.13	114.88	41.50	76.00	52.00	46.75	97.00	51.13	75.88	26.75	37.75
C-456D-305-168	120.00	210.00	262.00	221.00	354.00	421.50	20.50	110.00	62.25	76.00	24.13	16.13	166.50	38.38	94.13	52.00	46.75	98.50	51.75	90.88	26.13	57.00
C-456D-305-144	120.00	180.00	260.00	220.75	353.75	398.00	32.75	110.00	72.50	76.00	21.13	16.13	136.88	38.38	94.25	52.00	46.75	98.50	51.75	90.88	26.13	57.00
C-456D-256-144	120.00	180.00	260.00	220.75	353.75	398.00	32.75	110.00	72.50	76.00	21.13	16.13	136.88	38.38	94.25	52.00	46.75	98.50	51.75	90.88	26.13	57.00
C-456D-365-120	120.00	152.00	260.00	220.75	353.75	379.00	54.50	110.00	75.50	76.00	21.13	16.13	108.88	38.38	94.25	52.00	46.75	98.50	51.75	90.88	26.13	57.00
C-456D-305-120	111.00	155.00	234.00	208.63	326.63	351.00	25.00	95.00	78.25	70.00	21.00	16.13	114.88	38.38	79.13	52.00	46.75	97.00	51.13	75.88	29.88	37.75
C-456D-256-120	111.00	155.00	232.00	208.63	326.63	349.00	25.00	95.00	76.00	70.00	21.00	16.13	114.88	38.38	79.13	52.00	46.75	97.00	51.13	75.88	29.88	37.75
C-456D-213-120	111.00	155.00	232.00	208.63	326.63	349.00	25.00	95.00	76.00	70.00	21.00	16.13	114.88	38.38	79.13	52.00	46.75	97.00	51.13	75.88	29.88	37.75
C-456D-256-100	111.00	129.00	232.00	208.63	326.63	330.50	45.75	95.00	75.75	70.00	21.00	16.13	88.88	38.38	79.13	52.00	46.75	97.00	51.13	75.88	29.88	37.75
C-320D-256-144	120.00	180.00	260.00	215.25	353.75	398.00	32.75	110.00	72.50	76.00	21.13	16.13	136.88	34.00	98.63	52.00	43.00	87.50	53.625	93.00	31.00	48.25
C-320D-256-120	111.00	155.00	232.00	203.13	327.13	349.00	25.00	95.00	76.00	70.00	21.00	15.88	114.88	34.00	83.50	53.00	43.00	85.50	54.00	79.00	31.00	33.25
C-320D-213-120	111.00	155.00	232.00	203.13	327.13	349.00	25.00	95.00	76.00	70.00	21.00	15.88	114.88	34.00	83.50	53.00	43.00	85.50	54.00	79.00	31.00	33.25
C-320D-305-100	111.00	129.00	232.00	203.13	327.13	330.50	45.75	95.00	76.00	70.00	21.00	15.88	88.88	34.00	83.50	53.00	43.00	85.50	54.00	79.00	31.00	33.25

* Conventional Crank Balanced Units are available in either two-point foundation or standard base foundation designs. Two-point units are suitable for front and rear concrete block foundations, standard units must have a one-piece block foundation supporting the entire steel base. Dimension "N" is for two-point units and dimension "N_1" is for standard units.

NOTE: Do not use the above dimensions for foundation. Request a foundation plan. Popular API models shown, other models available on request.

450 Gears Road, Suite 550
Houston, Texas 77067
Phone: 281/875-6500
Fax: 281/875-4236
www.lufkin.com

CONVENTIONAL CRANK BALANCED PUMPING UNITS

LUFKIN
OILFIELD PRODUCTS GROUP

Dimensional Data (inches)

Unit Size*	A	B	C	E	F	H	I	J	L	M	N	N1	R	T	U	V	W	X	AA	AB	UU	VV
C-320D-256-100	111.00	129.00	232.00	203.13	327.13	330.50	45.75	95.00	76.00	70.00	21.00	15.88	88.88	34.00	83.50	53.00	43.00	85.50	54.00	79.00	31.00	33.25
C-320D-246-86	111.00	111.00	232.00	203.13	327.13	317.50	59.75	95.00	75.75	70.00	21.00	15.88	70.88	34.00	83.50	53.00	43.00	85.50	54.00	79.00	31.00	33.25
C-320D-213-86	96.00	111.00	196.13	183.50	290.50	282.00	23.75	78.00	75.00	57.75	16.13	15.88	75.50	34.00	66.50	53.00	43.00	85.50	37.13	62.13	30.88	33.25
C-320D-246-74	96.00	96.00	196.13	183.50	290.50	271.00	35.50	78.00	77.75	57.75	16.13	15.88	60.50	34.00	66.50	53.00	43.00	85.50	37.13	62.13	30.88	33.25
C-228D-213-120	111.00	155.00	232.00	196.13	326.63	349.00	25.13	95.00	76.00	70.00	21.00	15.88	114.88	30.00	87.00	53.00	37.00	78.50	54.00	79.00	28.00	33.25
C-228D-213-100	96.00	129.00	196.13	176.50	290.00	295.00	21.75	78.00	63.00	59.75	16.13	15.88	93.50	30.00	70.00	53.00	37.00	78.50	37.13	62.13	27.88	33.25
C-228D-173-100	96.00	129.00	196.13	176.50	290.00	295.00	21.75	78.00	63.00	59.75	16.13	15.88	93.50	30.00	70.00	53.00	37.00	78.50	37.13	62.13	27.88	33.25
C-228D-246-86	111.00	111.00	232.00	196.13	326.63	317.50	59.75	95.00	75.75	70.00	21.00	15.88	70.88	30.00	87.00	53.00	37.00	78.50	54.00	79.00	28.00	33.25
C-228D-213-86	96.00	111.00	196.13	176.50	290.00	282.00	23.75	78.00	75.00	59.75	16.13	15.88	75.50	30.00	70.00	53.00	37.00	78.50	37.13	62.13	27.88	33.25
C-228D-200-74	96.00	96.00	196.13	176.50	290.00	271.00	35.63	78.00	77.25	59.75	16.13	15.88	60.50	30.00	70.00	53.00	37.00	78.50	37.13	62.13	27.88	33.25
C-228D-173-74	84.00	96.00	168.25	160.00	273.50	243.00	16.75	68.00	68.75	51.75	15.88	12.25	65.00	30.00	70.00	53.00	37.00	78.50	27.25	52.25	27.88	33.25
C-160D-173-100	96.00	129.00	195.13	172.00	288.00	295.00	21.50	78.00	62.75	57.75	15.88	15.88	93.50	26.00	74.50	50.00	32.00	70.50	37.13	62.88	26.63	34.75
C-160D-173-86	96.00	111.00	195.13	172.00	288.00	282.00	23.75	78.00	74.88	57.75	15.88	15.88	75.50	26.00	74.50	50.00	32.00	70.50	37.13	62.88	26.63	34.75
C-160D-200-74	96.00	96.00	195.13	172.00	288.00	271.00	35.25	78.00	77.25	57.75	15.88	15.88	60.50	26.00	74.50	50.00	32.00	70.50	37.13	62.88	26.63	34.75
C-160D-173-74	84.00	96.00	168.25	155.50	260.50	243.00	16.75	68.00	68.75	51.75	15.88	15.88	65.00	26.00	63.50	50.00	32.00	70.50	23.63	53.25	26.63	34.75
C-160D-143-74	84.00	96.00	166.00	155.50	260.50	241.00	16.75	68.00	66.00	51.75	15.88	15.88	65.00	26.00	63.50	50.00	32.00	70.50	23.63	53.25	26.63	34.75
C-160D-173-64	84.00	84.00	166.00	155.50	260.50	232.50	26.00	68.00	67.00	51.75	15.88	15.88	53.00	26.00	63.50	50.00	32.00	69.75	23.63	53.25	26.63	34.75
C-160D-143-64	72.00	84.00	146.50	133.75	227.75	210.00	18.00	56.00	53.75	50.75	12.25	12.25	62.75	26.00	52.50	50.00	32.00	69.75	28.75	41.25	17.13	30.25
C-114D-119-86	84.00	111.00	166.00	150.00	266.00	252.00	14.75	68.00	54.50	51.75	15.88	12.25	80.00	24.00	71.00	50.00	25.00	66.75	27.50	53.25	23.13	34.75
C-114D-143-74	84.00	96.00	166.00	150.00	266.00	241.00	16.75	68.00	66.50	51.75	15.88	12.25	65.00	24.00	71.00	50.00	25.00	66.75	27.50	53.25	23.13	34.75
C-114D-173-64	84.00	84.00	166.00	150.00	266.00	232.50	26.13	68.00	67.00	51.75	15.88	12.25	53.00	24.00	71.00	50.00	25.00	66.75	27.50	53.25	23.13	34.75
C-114D-143-64	72.00	84.00	146.50	128.25	226.25	210.00	18.13	56.00	53.75	50.75	12.25	12.25	62.75	24.00	53.00	50.00	25.00	66.75	28.75	41.25	13.63	30.25
C-114D-173-54	72.00	72.00	146.50	128.25	226.25	201.00	19.38	56.00	62.25	50.75	12.25	12.25	50.75	24.00	53.00	50.00	25.00	66.75	28.75	41.25	13.63	30.25
C-114D-133-54	64.00	72.00	116.00	119.88	213.88	183.00	13.50	50.00	49.88	47.00	–	10.13	51.13	24.00	49.00	50.00	25.00	67.25	22.63	35.13	13.50	30.25
C-80D-119-64	64.00	84.00	116.00	119.88	213.88	191.50	13.25	50.00	40.38	47.00	–	10.13	63.13	24.00	49.00	50.00	25.00	67.25	22.63	35.13	13.50	30.25
C-80D-133-54	64.00	72.00	116.00	119.88	213.88	183.00	13.50	50.00	49.88	47.00	–	10.13	51.13	24.00	49.00	50.00	25.00	67.25	22.63	35.13	13.50	30.25
C-80D-119-54	64.00	72.00	116.00	119.88	213.88	183.00	13.50	50.00	49.88	47.00	–	10.13	51.13	24.00	49.00	50.00	25.00	67.25	22.63	35.13	13.50	30.25
C-80D-133-48	64.00	64.00	116.00	119.88	213.88	177.00	14.63	50.00	54.88	47.00	–	10.13	43.13	24.00	49.00	50.00	25.00	67.25	22.63	35.13	13.50	30.25
C-80D-109-48	56.00	64.00	105.00	111.88	200.38	166.25	14.63	46.00	44.00	40.75	–	10.13	43.13	24.00	45.50	50.00	25.00	65.25	18.63	31.13	13.50	30.25
C-57D-76-54	56.00	72.00	105.00	111.88	200.38	172.00	13.63	46.00	38.88	40.75	–	10.13	51.13	20.00	47.50	50.00	25.00	58.25	18.63	31.13	17.50	30.25
C-57D-109-48	56.00	64.00	105.00	111.88	200.38	166.25	16.00	46.00	42.75	40.75	–	10.13	43.13	20.00	47.50	50.00	25.00	58.25	18.63	31.13	17.50	30.25
C-57D-95-48	56.00	64.00	105.00	111.88	200.38	166.25	16.00	46.00	42.75	40.75	–	10.13	43.13	20.00	47.50	50.00	25.00	58.25	18.63	31.13	17.50	30.25
C-57D-89-42	48.00	56.00	98.50	98.00	186.50	152.00	16.38	44.00	42.00	38.50	–	8.13	41.00	20.00	47.50	50.00	25.00	58.00	16.63	29.13	17.50	30.25
C-57D-76-42	48.00	56.00	98.50	98.00	186.50	152.00	16.38	44.00	42.00	38.50	–	8.13	41.00	20.00	47.50	50.00	25.00	58.00	16.63	29.13	17.50	30.25

* Conventional Crank Balanced Units are available in either two-point foundation or standard base foundation designs. Two-point units are suitable for front and rear concrete block foundations, standard units must have a one-piece block foundation supporting the entire steel base. Dimension "N" is for two-point units and dimension "N1" is for standard units.

NOTE: Do not use the above dimensions for foundation. Request a foundation plan. Popular API models shown, other models available on request.
For smaller units see Churchill Beam Balanced Units, page 35.

Two-Point Foundation

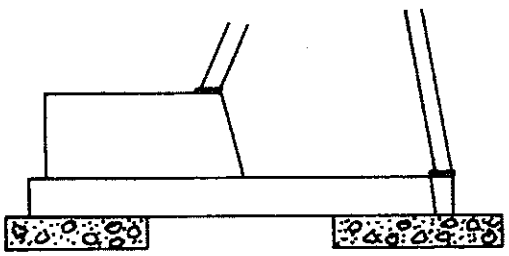
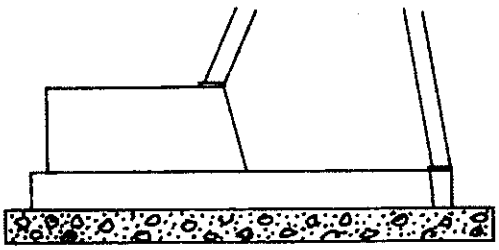
Standard Foundation