Environmental Science & Technology

Policy Analysis

pubs.acs.org/est

Model to Investigate Energy and Greenhouse Gas Emissions Implications of Refining Petroleum: Impacts of Crude Quality and Refinery Configuration

Jessica P. Abella and Joule A. Bergerson*

Chemical and Petroleum Engineering, Institute for Sustainable Energy, Environment and Economy, University of Calgary, 2500 University Drive NW, Calgary, Alberta, Canada T2N 1N4

Supporting Information

ABSTRACT: A petroleum refinery model, Petroleum Refinery Life-cycle Inventory Model (PRELIM), which quantifies energy use and greenhouse gas (GHG) emissions with the detail and transparency sufficient to inform policy analysis is developed. PRELIM improves on prior models by representing a more comprehensive range of crude oil quality and refinery configuration, using publicly available information, and supported by refinery operating data and experts' input. The potential use of PRELIM is demonstrated through a scenario analysis to explore the implications of processing crudes of different qualities, with a focus on oil sands products, in different refinery configurations. The variability in GHG emissions estimates resulting from all cases considered in the model application shows differences of up to 14 g CO_2eq/MJ of crude, or up to 11 g CO_2eq/MJ of gasoline and 19 g CO_2eq/MJ of diesel (the margin of deviation in the emissions estimates is roughly 10%). This variability is comparable to the magnitude of upstream emissions and therefore has implications for both policy and mitigation of GHG emissions.

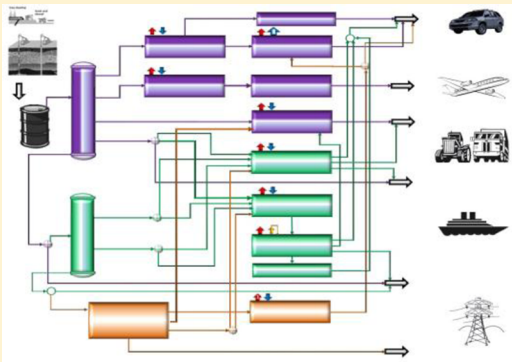

INTRODUCTION

The petroleum refining industry is the second-largest stationary emitter of greenhouse gases (GHG) in the U.S.[1] (third-largest in the world[2]). Annual GHG emissions from a large refinery are comparable to the emissions of a typical (i.e., 500 MW) coal-fired power plant.[3,4] For U.S. refineries, where most of the North American production of petroleum-derived fuels occurs, annual emissions were reported to be close to 180 million tonnes of CO_2eq in 2010, representing nearly 12% of U.S. industrial sector emissions or 3% of the total U.S. GHG emissions.[1,5−7]

This industry faces difficult investment decisions due to the shift toward "heavier" crude in the market, both domestic and imported. For example, in 1990, the fraction of imported crude into the U.S. classified as heavy (at or below API gravity, a measure of density, of 20) was roughly 4%. By 2010 this fraction had increased to 15%.[8] Between 2008 and 2015, it is estimated that more than $15 billion will be spent to add processing capacity specifically for heavy crude blends in U.S. refineries.[9] Each refinery must decide whether and how much they will process heavy crude while considering that processing such crudes requires more energy and results in higher refinery GHG emissions. These major capital investment decisions will impact the carbon footprint of the refining industry for decades to come.

Current and future environmental regulations will also affect the decisions faced by this industry. Life cycle assessment (LCA) has been expanded as a tool to enforce GHG emissions policies. For example, California's Low Carbon Fuel Standard[10] (CA-LCFS) embeds life cycle assessment within the policy to measure emissions intensity of various transportation fuel pathways through their full life cycle (including extraction, recovery, and transport). Using LCA in this way requires more accurate assessments of the emissions intensity upstream of the refinery for each crude. However, the varying quality of these crudes will also have significant implications for refinery GHG emissions. Therefore, in this paper we argue that more accurate assessments of the impact of crude qualities on refinery emissions are also required to appropriately account for the variations in emissions and avoid potential unintended consequences from such policies.

The implications for refinery GHG emissions of processing oil sands (OS) products provide a good case study due to the link between upstream processing decisions and refinery emissions, as well as the wide variety of OS products. Canada has the world's third largest petroleum reserves and is the top supplier of imported oil to the U.S.[11] The OS resource represents over 97% of Canada's oil reserves.[12] Current OS operations produce bitumen (an ultraheavy petroleum product) that undergoes either dilution (to produce diluted bitumen referred to as dilbit, synbit, or syndilbit) or upgrading processes

Received: May 11, 2012
Revised: September 11, 2012
Accepted: September 26, 2012
Published: September 26, 2012

 © 2012 American Chemical Society

Table 1. Canadian Crudes under Analysis[a]

	Crude Categories	*Production Volumes*	*Configuration selected in Base Case*	*Description*	*S wt%*	*API*	*H wt%*	*MCR wt%*	*~Kw*	*Tb_{50} (°C)*
Bitumen 1	**Bitumen** No bitumen currently goes to refinery. Bitumen case may apply if diluent (condensate) is not used at the refinery.	1.4 M bpd in 2009 including bitumen processed at upgraders[b]	Deep Conversion: Coking and fluid catalytic cracking	Confidential	5.0	8.2	10.1	14.7	11.6	427
Bitumen 2				Confidential	4.1	12.1	10.3	10.9	11.0	442
Dilbit 2	**Diluted bitumen**: (Dilbits) using condensate at a 25:75 % diluents-to-bitumen ratio. Synthetic bitumen blend (Synbit) 50:50 % Light SCO -to-crude ratio. Syndilbit is a bitumen blend with Light SCO and condensate.	Synbit and Syndilbit comprise nearly 2% OS production[b] All diluted bitumens comprise nearly 49% OS production[b]	Deep Conversion: Coking and fluid catalytic cracking	**Cold Lake (CL):** Asphaltic heavy crude blend of bitumen (11API/5.5%S) and condensate (65API/0.1%S). CL Production ranges from 150 kbd to 200kbd of blend	3.9	20.7	11.2	10.6	11.8	458
Syn-dilbit 1				**Albian Heavy Synthetic** (AHS) contains vacuum residuum (which is an exception for SCOs). It is a blend of sweet SCO crude with unconverted oil from resid hydrocracking	2.2	19.5	10.7	10.9	11.6	447
SCO, So,H1	**Synthetic Crude Oil (SCO)** is a blend of naphtha, distillate, and gas oil range crude fractions. Sweet (Sw) blends comprise majority of SCO production. It has been estimated that 75% of the 2007 SCO production was light Sw SCO without vacuum resid [56]	Nearly 13% OS production[b]	Deep Conversion: Coking and fluid catalytic cracking	**Suncor Synthetic H (OSH)** is a sour synthetic blend. It is comprised of roughly 75% virgin gas oil and 25% lighter fractions.	3.1	19.9	11.1	0.6	11.4	393
SCO, Sw, M1		Nearly 38% OS production[b]	Medium Conversion: fluid catalytic cracking	**Syncrude Synthetic** (SYN) sweet SCO derived from combination of hydroprocessing and fluid coking technologies at upstream upgrading operations. SYN production 58.9 kbd	0.1	31.5	12.5	0.1	11.8	321
SCO, Sw, L1			Hydroskimming	**Husky Synthetic Blend** (HSB) sweet SCO derived from combination of hydroprocessing and delayed coking technologies at upstream upgrading operations. Upgrading production is around 53 kbd	0.1	32.6	12.9	0.1	11.9	329
SCO, Sw, L2				**Suncor Synthetic A (OSA)** sweet SCO. Suncor Upgrading production is around 280 kbd; 60% production is light Sw SCO. i.e., OSA production close to 168kbd	0.2	33.1	12.7	0.02	11.9	315
Conv, So,H1	**Canadian Conventional crude (Conv)**, as oil sands products, are classified based on API (Light API>32, Medium 32>API>22, Heavy API <22) and sulfur content (Sweet S< 0.5wt%, Sour S> 0.5wt%)	6% U.S. Crude oil imports[c]	Deep Conversion: Coking and fluid catalytic cracking	**Bow River North.** Conventional benchmark.	2.7	21.1	11.64	8.57	11.7	427
Conv, So, M1			Medium Conversion: Fluid catalytic cracking	**Midale** (Benchmark medium sour crude)	2.3	29.6	12.1	5.8	11.9	361
Conv, So, L2				**Sour High Edmonton**	1.4	34.9	12.8	3.8	12.8	323
Conv, Sw, L2			Hydroskimming	**Mixed Sweet Blend**	0.4	39.2	13.2	2.0	12.2	298

[a]S: Sulfur content; API: gravity; H: hydrogen content; MCR: micro carbon residuum; ~Kw: approximated Watson characterization factor using Tb_{50} in wt.; Tb_{50}: temperature at which 50% of the mass is recovered through distillation of the whole crude; wt: weight basis; So: sour; Sw: sweet; H: heavy; L: light; kbpd: thousand barrels per day. [b]Calculation basis (2009): 1361 kbpd of oil sands products derived from 1269 kbd of raw bitumen,[57] and 75% of the SCO production ends in sweet light products. [c]Calculation basis (2009): 1269 kbpd U.S crude oil imports from Canada (i.e., 21% of U.S. crude oil imports).[8] 898 kbpd oil sands products exported to U.S. (i.e., 67% of oil sands products[57]); thus, 371 kbpd conventional crude oils exported to U.S. (i.e., 4% of U.S. crude oil imports).

(to produce a high quality synthetic crude oil, SCO) prior to sale to petroleum refineries. Therefore, a diversity of product quality is possible from these operations. Table 1 lists and describes the main characteristics of each category of OS products. The impacts of different OS processing decisions on refinery GHG emissions have the potential to be large and have yet to be explored in depth.

A petroleum refinery is a set of interconnected but distinct process units that convert relatively low value liquid hydrocarbon material (resulting from blending multiple streams of crude feedstock) into more valuable products by increasing its hydrogen to carbon ratio. Different combinations of process units (configurations) are possible leading to a wide variety of potential refinery configurations. In a refinery, a distillation process separates the "whole crude" into groups or "fractions". These fractions are made up of molecules with a particular boiling point temperature range. These ranges are defined by "cut temperatures". Each fraction is then sent to different process units where chemical and thermal processes fragment and/or rearrange the carbon and hydrogen bonds of the hydrocarbon while eliminating the undesired components such as sulfur and nitrogen that are also present in each fraction. Each refinery has a final product specification which dictates the volume and quality of each desired end product (e.g., *X* barrels

of gasoline with Y% sulfur). A combination of input crudes is selected and process units are operated to satisfy such specifications.

Crude quality and refinery configuration affect GHG emissions related to processing a particular crude. Crude quality is defined by physical and chemical properties (e.g., the hydrogen content of the crude fractions) that determine the amount and type of processing needed to transform the crude into final products. The technologies employed, as well as how they are combined in operation in a refinery, will require different types and amounts of energy inputs and will produce different types and amounts of energy byproducts (e.g., coke) and final products (e.g., gasoline). For example, heavier crudes generally require more energy to process into final products than lighter crudes due to their need for additional conversion processes and their low hydrogen content.

Two prominent North American life cycle (LC) tools are now forming the basis of regulation as opposed to their original objective of informing policy: Natural Resource Canada's GHGenius[13] and Argonne National Laboratory's Greenhouse Gases, Regulated Emissions, and Energy Use in Transportation (GREET).[14] The GREET model and the CA-GREET version, used as the basis of CA-LCFS, do not account for the effects of crude quality at the refinery stage in their calculations (i.e., all crudes will have the same energy requirements and GHG emissions). GHGenius accounts for crude quality by modifying a default energy intensity value using the average API gravity and sulfur content of an entire refinery crude slate (i.e., a combination of crudes blended as they enter the refinery) and a regression model based on historic regional refinery performance data. [15] The LC models' approaches do not decouple the effects of changes in energy requirements due to changes in crude quality and the changes in each refinery's performance (e.g., process unit efficiencies), nor do they develop a consensus on the impact of allocation (how environmental impacts are split across products in a multiproduct industry).[16] It is possible to combine the use of LC-based models and refinery simulators to calculate LC energy use and GHG emissions for a particular crude and refinery;[17] however, this is not a straightforward effort as will be demonstrated by this paper.

Peer-reviewed analysis that investigates energy and GHG implications of shifting to heavier crudes in refineries has only recently started to appear (since 2010).[18,19] However, these studies did not explore differences in emissions intensity of selected technologies nor investigate the full range of different qualities of crudes derived from the OS operations. Three nonpeer reviewed studies, conducted using a LC framework, have investigated OS crude quality effects on refinery GHG emissions.[17,20−22] However, these studies have used proprietary refinery models limited in the transparency needed to understand the boundaries, assumptions, and data used as well as the ability to evaluate alternate scenarios or pathways.[23] The literature does not present a transparent tool nor recommend a method that predicts GHG emissions with the ability to capture the impact of crude quality and refinery configuration (see Supporting Information (SI) for detailed review of the literature).

This paper (1) provides an overview of the development of the Petroleum Refinery Life-cycle Inventory Model, PRELIM, including model structure and crude assay inventory as well as calculations and assumptions; (2) applies the model to assess the impact of crude quality and refinery configuration on energy use and GHG emissions including a comprehensive set of OS products and conventional crudes; (3) explores the most influential parameters in the model for determining energy use and GHG emissions through scenario analysis; and (4) compares results from previous studies with those from the application of PRELIM.

METHOD

PRELIM is a stand-alone, spreadsheet-based model built using a LC approach by employing refinery linear programming modeling methods to represent a range of possible configurations reflecting currently operating refineries in North America. The LC/systems-level approach provides the structure to obtain a tool of wide applicability (i.e., not specific to any one refinery but capable of representing a wide variety of refinery configurations) in the assessment of refinery LC energy use and GHG emissions for crudes of different quality, and allows for the easy incorporation of model results into Well-To-Wheel analyses (WTW). WTWs are a variant of LCAs focused on transportation fuels. The refinery linear programming modeling methods[24] allow for process unit and overall refinery mass balances. These methods overcome the lack of crude specificity of previous LC models[16,25,26] and facilitate exploration of alternative LC inventory allocation methods at the refinery subprocess (i.e., process unit) level. Because the model structure allows for the investigation of two key LCA concepts (i.e., functional unit and allocation[27−29]) as recommended by the International Standard ISO 14041,[30] the model has been called the Petroleum Refinery Life-cycle Inventory Model.

Model Structure and Key Assumptions. Scheme S.1 in the SI presents a basic flow diagram of the overall refinery model structure and how the process units are connected. PRELIM can simulate up to ten specific refinery process configurations. All refinery configurations include crude distillation, hydrotreating, and naphtha catalytic reforming processes. The configurations are differentiated by whether or not the following conversion technologies are present: gas oil hydrocracking, fluid catalytic cracking (referred to hereafter as FCC), delayed coking, and residual hydrocracking. Supporting unit processes such as steam methane reforming (SMR) and acid gas treatment are also included.

Each configuration requires a different amount of energy to process a crude and produces a different slate (i.e., volume and type) of refinery final products including transportation fuels (i.e., gasoline, kerosene, and diesel) as well as heavy fuel oil, hydrogen from the naphtha catalytic reforming process, refinery fuel gas (i.e., gas produced as a byproduct in process units within the refinery), and the possible production of coke or hydrocracking residue. To run the model, a user must select the crude, the configuration, and the allocation method desired through the spreadsheet-based interface. Default values can be used to represent the crude properties and energy requirements of each process unit. Crude properties can be represented by selecting a crude from the crude assay inventory in the model. Alternatively, a user can input a new crude assay and/or can modify any of the process unit model parameters either by selecting a value from the range of parameter values available in the model or by inputting their own parameter value(s). To characterize the whole crude and its fractions, a total of 62 parameters are input to the model, accounting for five crude oil properties: crude distillation curve (i.e., information about mass and volume yields of each fraction, and individual fraction characteristic boiling point), API gravity, sulfur content,

hydrogen content, and carbon residue. Supporting information describes how these crude properties affect the refinery energy use and GHG emissions estimates. Two additional crude properties, aromatic content and crude light ends content, impact refinery GHG emissions estimates and are modeled indirectly in PRELIM. PRELIM uses information about the quantity and type of energy required by an individual refinery process unit and assumes that the process energy requirements (electricity, heat, and steam) are linearly related to the process unit's volumetric feed flow rate.[31] This assumption is key to differentiate the energy required to refine crudes with different distillation curves (and therefore different volumes of each fraction that will pass through each process unit). Justification is provided in the SI.

PRELIM calculations include the upstream energy use and GHG emissions associated with the energy sources (i.e., electricity and natural gas).[32] Fugitive GHG emissions from a refinery tend to be an order of magnitude lower than combustion emissions[33] and are not considered in the current version of PRELIM.

The data available in the model for process unit energy requirements are presented as a default as well as a range of plausible values for each parameter derived from the literature.[24,34−37] The data were compared with confidential information and evaluated in consultation with experts from industry to verify that the values and their ranges are appropriate. PRELIM default values for process unit energy requirements are mostly from Gary et al.[35,38]

PRELIM can calculate overall refinery energy use and GHG emissions on a per barrel of crude or per megajoule (MJ) of crude basis, as well as energy use and GHG emissions attributed to a particular final product on a per MJ of product basis (e.g., per MJ of gasoline). For the latter type of functional unit, refinery energy use is allocated to final products at the refinery process unit level (SI details PRELIM allocation procedures, available options in the model, and the implications of different allocation methods). Summing the energy use across all refinery final products on a mass flow rate basis, and comparing to the total energy requirements summed across all process units, verifies the energy balance in the system (all results are reported on a lower heating value basis).

Differences in hydrogen content among crude feedstock and refinery final products are important factors that drive refinery CO_2 emissions.[19] In PRELIM, a global hydrogen mass balance method[39] is used to determine hydrogen requirements for each hydroprocessing unit (hydrotreating and hydrocracking) as well as byproduct hydrogen production from the naphtha catalytic reforming process unit. The method accounts for differences in the hydrogen content of different crudes and the assumption that all crudes are to be processed to meet intermediate and final product hydrogen specifications. Accurately estimating hydrogen requirements is one of the most critical model components (see SI for a more detailed discussion).

PRELIM uses correlations to determine yields of intermediate and final refinery products for each process unit. All correlations used in PRELIM are based on Gary et al.[35] The SI details assumptions about product yields for each process unit.

PRELIM Crude Assay Inventory. The PRELIM crude assay inventory is developed to allow a user the option to select from a predetermined list of crude assays. The current inventory includes publicly available data representing 22 Western Canadian crudes tracked by the Canadian Crude Quality Monitoring Program (CCQMP).[40] Also, the inventory includes seven additional assays from confidential sources to characterize a comprehensive range of qualities for OS-derived products (i.e., bitumen, diluted bitumen, SCO). Currently, there are at least two crude assays representing each category of crude (e.g., bitumen, diluted bitumen, and SCO are all categories of crudes). Western Canadian Conventional crudes are well-characterized using the data available in the public realm. Due to data availability we do not include a full suite of conventional crudes in our analysis. However, preliminary analysis of international crudes shows that the range of emissions presented for Canadian conventional crudes provides a rough approximation of the range of refinery emissions for light crudes globally. However, further analysis is required to confirm this and provide a complete LC comparison.

PRELIM requires characterization of the properties for nine crude fractions (see Scheme S.1). The method of separating the crude into nine fractions is selected to allow the flexibility needed to model different refinery configurations. CCQMP assays must be transformed to obtain the complete set of information needed. The SI details the transformation methods and the results of an evaluation of the methods used. In PRELIM, each particular crude assay is run individually, as opposed to running a crude slate. A crude-by-crude analysis was also suggested and tested in ref 22, and the impact of this simplification on emissions estimates is expected to be small.

Model Evaluation. PRELIM reduces the level of complexity in modeling refinery operations compared to the models used by the industry to optimize their operations. Confidential data (associated with crude assays, operating conditions, and energy requirement estimates) and consultation with refining experts were necessary to assess the validity of PRELIM input data and assumptions. In addition, sensitivity analyses and/or alternative logic calculations to estimate particular parameters were conducted. Finally, a covalidation exercise was conducted by comparing PRELIM's outputs with those of a more detailed refinery model to assess PRELIM's performance, identify any improvements required, and specify the level of accuracy that can be expected when using the model to inform policy.

The covalidation shows that the PRELIM model is capable of replicating the estimates of CO_2 emissions from a more complex model with a reasonable range of error/variability. Overall, the margin of deviation in the emissions estimates due to both assay data quality and the modeling approach is below 10% in almost all cases, which is within the error bounds of typical LC inventories.[41−43] Deviations in energy requirements, which lead to emissions deviations, are mainly associated with estimates for the hydrogen required which is also an uncertain variable in actual refinery operations.[39,44] The deviations are also explained in part by flexibility exhibited by real refinery operating conditions as well as assumptions in modeling. The SI details methods and results of this exercise.

Model Application. A scenario analysis[45] is used to explore the effects that crude quality and refinery configuration have on refinery energy use and GHG emissions estimates.

The starting point for the analysis is a "Base Case Scenario" (referred to hereafter as base case): a set of conditions (e.g., different crudes, emission factors, process unit energy intensities, allocation assumptions) to determine the refinery energy use and GHG emissions of a crude in a "default" refinery configuration. The purpose of the base case is to explore plausible scenarios in which only energy use and GHG emissions associated with the minimum processing capacity needed to transform each crude into transportation fuels or

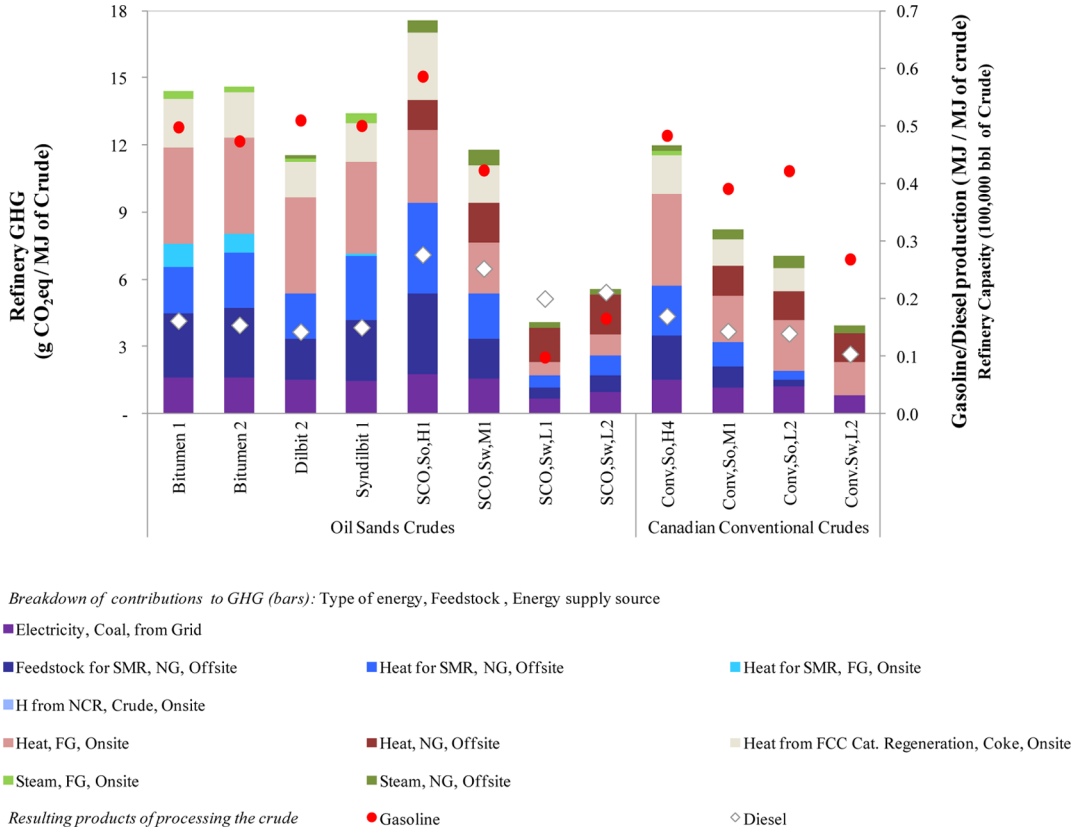

Figure 1. Base case greenhouse gas (GHG) emissions estimates and gasoline and diesel production from refining 100 000 bbl of different crudes. Major assumptions about base case: (1) Refining configuration is based on API and sulfur properties of the whole crude for both crude categories Conventional and OS-derived crudes: API (light API > 32, medium 32 > API > 22, heavy API <22) and sulfur content (S) (sweet S < 0.5 wt %, sour S > 0.5 wt %). Sweet light crudes (Sw, L) are run in a hydroskimming refinery; sour light (So, L), sweet medium (Sw, M), and sour medium (So, M) crudes are run in a medium conversion refinery; and heavy crudes (H: conventional, bitumen, dilbits) are run in a full conversion refinery. (2) Upgrading process units for the medium conversion refinery include a fluid catalytic cracking (FCC) process unit, and upgrading process units for full/deep conversion refinery include FCC and delayed coking process units. (3) A float case is assumed where crude properties and the refinery configuration (i.e., level of refining) determine the amount of gasoline and diesel produced. (4) Energy sources: hydrogen (H) via steam methane reforming (SMR) of natural gas (NG); refinery fuel gas (FG) from the crude and refining process units (RP) offsets NG consumption. FG is allocated through prioritizing the different NG requirements in the refinery (i.e., heat for processing, heat for steam, heat for SMR, and SMR feedstock) based on its heating value until it is exhausted. Heating values: 46.50 MJ/kg RFG low heating value (LHV) on mass basis and 47.14 MJ/kg NG LHV on mass basis.[58] Byproducts such as H via naphtha catalytic reforming (NCR) and coke deposited on FCC catalyst offset energy requirements as well. FCC regeneration must burn off the coke deposited on FCC catalyst to restore catalyst activity, which releases heat that satisfies most of the heat requirements of the FCC. FCC regeneration coke burned to complete combustion (coke yield 5.5 wt % FCC feed[35] and coke carbon content 85 wt %).[59] (5) Combustion GHG emissions factor is assumed the same for NG and FG combustion (56.6 g CO_2eq/MJ). H via NCR does not have any share of emissions due to allocation method employed. Electricity 100% coal-fired power (329 g CO_2 eq/MJ).[58] SI shows GHG emissions attributed to gasoline and diesel on a per MJ of product basis (Figure S5).

other final products is taken into account. In PRELIM, the default refinery configuration is set based on a set of three broad refinery categories: hydroskimming refinery, medium conversion refinery, and deep conversion refinery[46] as suggested by Marano.[47] All 10 refinery configurations in PRELIM fit into one of these three categories. The base case assigns each crude (OS and conventional) to the appropriate default refinery category, using API gravity and sulfur content of the whole crude as the criteria. Default process energy requirements are represented by literature values. A float case is assumed where crude properties and the refinery configuration determine the final product slate. When the alternative functional units are explored, refinery emissions are allocated to transportation fuels (i.e., gasoline, diesel, and jet fuel) on a hydrogen content basis (based on discussion in 19) across the scenarios. The SI details additional assumptions.

Four possible alternative refinery operating scenarios are created from a screening of parameters through sensitivity analysis and a collection of a range of plausible values for each parameter. These scenarios explore the impact of different refinery configurations available in PRELIM (crudes will not always end up in the default refinery configuration); variations in process energy requirements (greater efficiencies are possible than currently represented by the default values used); and, variations in fuel gas production calculations (a parameter that greatly varies throughout the industry).

Results are presented for a total of 12 assays out of the 29 present in PRELIM's assay inventory, selected to represent a range of qualities of crude for each category of crude (Table 1). For example, diluted bitumen is represented by "dilbit 2" and "syndilbit 1". These two assays are selected as they represent the highest and lowest overall refinery GHG emissions estimates respectively from the eight assays of diluted bitumen

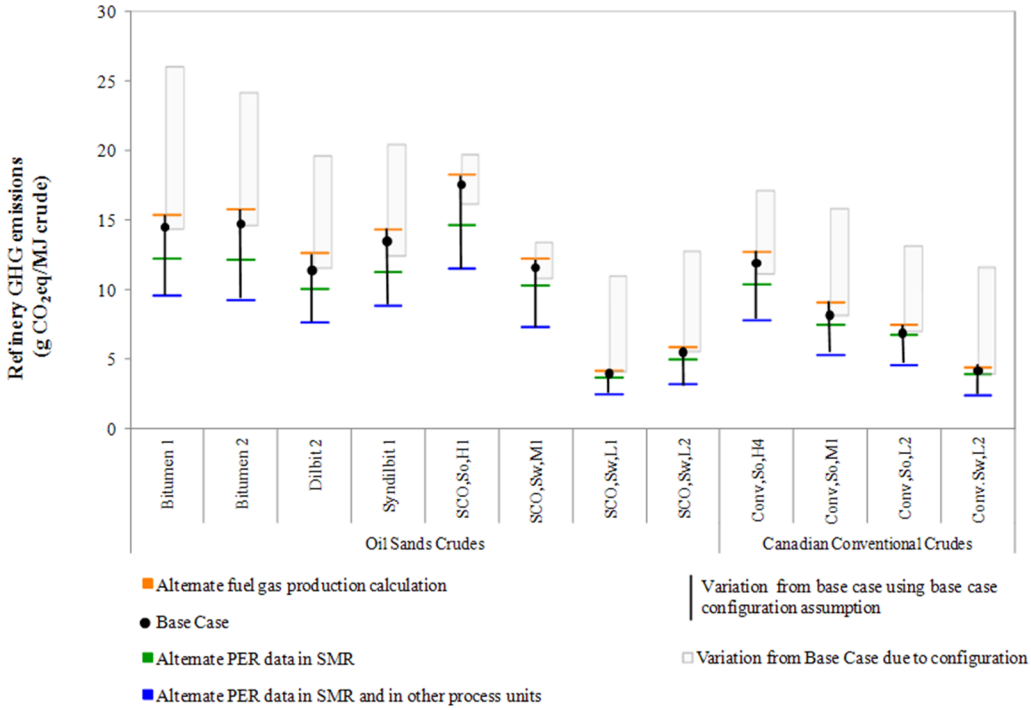

Figure 2. Scenario analysis overall refinery greenhouse gas (GHG) emissions. Scenarios: The base case represents the assumptions presented in Figure 1. Alternate process energy requirements (PER) data in steam methane reforming (SMR) uses a 91% energy efficiency as MJ hydrogen produced/MJ net energy use; energy use accounts for steam production inside SMR that is exported to other process units.[26] Alternate PER in SMR and in other process units simulate additional improvements on energy requirements in other refinery process units based on process energy use confidential data (overall efficiency improvement of approximately 30%). Alternate fuel gas production calculation assesses increasing refinery fuel gas production using an alternative calculation method to determine fuel gas production in hydrotreating process units. PRELIM uses a simple method to determine the amount of refinery fuel gas. The alternative calculation is based on hydrogen requirement specific to each crude while holding other base case assumptions constant that ends in high estimates in the amount of refinery fuel gas (average increase of 2.5% across all process units); variations in emissions are mainly associated with the hydrogen content of the total amount of refinery fuel gas. Variation from Base Case due to configuration defines range of GHG estimates associated with use of different refinery configurations while holding other base case assumptions constant. The SI shows scenario analysis estimates of GHG emissions attributed to gasoline and diesel on a per MJ of product basis (Figure S5).

in the assay inventory. Publicly available assay data are used for all OS assays with the exception of raw bitumen which is currently not processed directly in a refinery so data are not publicly available. The publicly available assays are streams or blends of crudes of different qualities flowing through pipelines in Canada. These streams were used to represent specific crude categories (e.g., diluted bitumen, SCO) through consultation with industry and academic experts to ensure that they represent an accurate range of characteristics for each category of OS-derived crudes. Conventional crudes are presented for the purposes of comparison. Table 1 provides a summary of all 12 assays, current production volumes of each crude category, source of data, and properties of the whole crude.

RESULTS

Base Case Results. Under the base case assumptions, total refinery energy use ranges from 0.06 to 0.24 MJ/MJ of crude (340−1400 MJ/bbl of crude). A detailed discussion of energy use is presented in SI. As expected, energy use has a positive linear relationship with the GHG emissions. The resulting GHG emissions of processing crudes of different qualities can vary widely, mainly due to differences in hydrogen requirements. Total refinery GHG emissions range from 4 to 18 g CO_2eq/MJ of crude being processed (23−110 kg CO_2eq/bbl of crude). For the 12 crudes considered in the base case, the supply of hydrogen contributes from 0 to 44% of refinery emissions, process heating contributes 26−71%, FCC catalyst regeneration contributes 0−17%, steam contributes 2−7%, and electricity contributes 10−21%. Up to 48% of the emissions associated with hydrogen requirements result from the chemical transformation of natural gas into hydrogen in the SMR process unit. Zero emissions from hydrogen supply are possible where hydrogen requirements are low enough to be met by coproduction of hydrogen via naphtha catalytic reforming. This form of hydrogen is considered to be a byproduct and therefore a CO_2eq emissions-free stream as the base case assumes that emissions are allocated only to final refinery products. Generally, the GHG emissions estimates from each energy type are proportional to their contribution to overall energy use with the exception of electricity, for which emissions are determined by the emissions intensity of electricity production (further discussion in SI).

Figure 1 shows that the amount of gasoline and diesel produced from the same amount of input (i.e., 100 000 barrels of crude) also varies with crude quality, but to different extents (further details in SI).

Alternative Scenario Results. Figure 2 presents the base case GHG emissions (also presented in Figure 1) for each crude as well as variation from the base case due to changes in assumptions regarding refinery configuration, process energy requirements, energy use for production of hydrogen via SMR, and refinery fuel gas production.

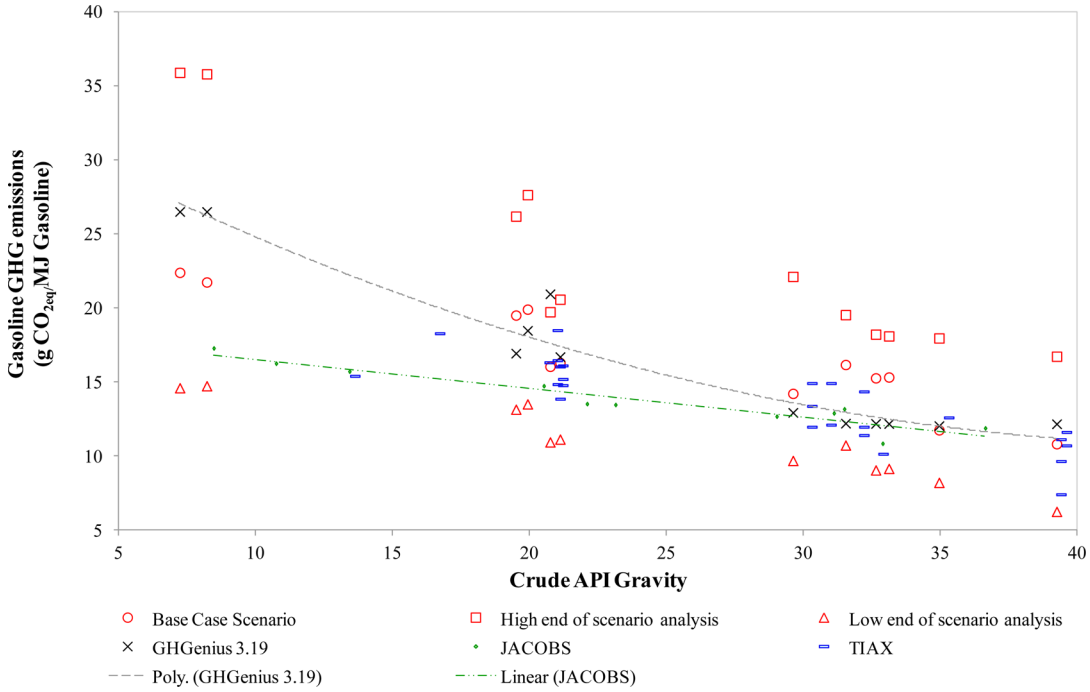

Figure 3. Comparison of GHGenius, JACOBS, TIAX, and PRELIM gasoline greenhouse gas (GHG) estimates. Base case estimates and variation from the scenario analysis presented in Figure 1. Variation from base case can be compared with variation in TIAX estimates;[17] TIAX study accounted for alternative configurations and/or energy efficiencies (i.e., different U.S. production regions). If PRELIM uses the same configuration as JACOBS[22] while holding other assumptions to base case constants, PRELIM replicates similar linear regression as JACOBS results suggest. GHGenius[60] estimates are from default GHGenius v.3.19 assumptions while varying API gravity and sulfur of crude using PRELIM assay inventory (polynomial regression built in GHGenius from crude slates of API > 25.4 and using Canadian industry forecast data). The GREET model emissions estimates are not included in the figure as there is no variation presented due to crude quality (the default gasoline carbon intensity is estimated at 10.5 g CO2eq/MJ of gasoline). Gerdes model estimates[25] and recent GHGenius estimates[61] using a linear relationship approach (which are not included in the figure) are also in the range of gasoline GHG emissions estimates resulting from the low end of the scenario analysis and TIAX as illustrated by Brandt.[49] These estimates are not included in the figure as they are either duplications of the same data or present very similar trends and ranges.

The magnitude of the impact on results from varying the refinery configuration is crude-specific but in general this factor has a greater impact than any other individual factor considered. When the full range of refinery configurations are run for each crude, the emissions can change as much as 12 g CO_2eq/MJ of crude (71 kg/bbl of Bitumen1) or up to 190% (Conv,Sw,L2: conventional sweet light crude 2 as indicated in Figure 2). Lighter and sweeter (lower in sulfur) crudes have increased GHG emissions above the base case since the base case assumes a simple hydroskimming configuration, and for heavier crudes (OS and conventional) there are deep conversion configurations in which the GHG emissions are higher or lower than those estimated in the base case. Therefore, the method used in the base case for assigning crudes to a default or "ideal" level of conversion is incomplete if the goal is to predict the full range of potential GHG emissions associated with refining a particular crude (as a crude could be processed in a variety of refineries with different configurations). Therefore, the specific refinery configuration and the associated process units play an important role.

Process unit energy requirements, as well as refinery fuel gas production, can vary significantly and collectively; this variation can result in a wide range of emissions estimates, implying that attention has to be placed on these assumptions and their implications for policy. Improving energy use in hydrotreating, FCC, naphtha catalytic reforming, delayed coking, and SMR process units (represented by real refinery operating data with higher levels of efficiency than the literature data used in the base case—overall efficiency improvement of approximately 30%) decrease GHG emissions by 34% (5 g CO_2eq/MJ of Bitumen1) to 43% (2 g CO_2eq/MJ of SCO,Sw,L2). Increasing the estimated production of refinery fuel gas (average increase of 2.5% across all process units) can increase GHG emissions by as little as 1% (0.02 g CO_2eq/MJ of SCO,Sw,L1) or as much as 10% (0.8 g CO_2eq/MJ of Conv,So,M1; up to 1 g CO_2eq/MJ of Bitumen 1). The SI details results of other scenarios.

As a whole, Figure 2 illustrates that a wider range of GHG emissions estimates is seen for OS products (2.5−26 g CO_2eq/MJ of crude) compared to conventional crudes (2.4−17 kg CO_2eq/MJ of crude). Generally, the highest estimates are for bitumen (9.3−26 kg CO_2eq/MJ of crude). This represents potential cases such as dilbit being sent to a refinery and the diluent being separated and returned to the OS operation. GHG emissions from refining diluted bitumen range between 7.6 and 20 g CO_2eq/MJ of crude. The SCOs represent one of the highest and the lowest GHG emissions of all crudes considered. The heavy SCO crude category can have GHG emissions as high as 20 g CO_2eq/MJ of crude. Light sweet SCO can have GHG emissions as low as 2.5 g CO_2eq/MJ of crude. Light/heavy crude differentials may provide an incentive for the production of light SCO; however, this differential can decrease in a market with increasing supply of heavy oil and refineries increasing their capabilities to manage that feedstock. The SI discusses PRELIM's SCO refinery GHG emissions estimates in detail. It is important to note that the high and low ends of the GHG emissions for OS crudes represent the cases of recycling

of diluent (bitumen as a feedstock) and upgrading the bitumen prior to entering the refinery (high quality SCO) which have upstream processing requirements quite different from conventional crudes and will have different implications on a full LC basis.[48]

Alternative Functional Units. Given recent regulations such as the CA-LCFS, there has been increased interest in representing LC emissions on a per product basis. This requires allocation of total refinery emissions to each product. Assuming GHG emissions are allocated only to transportation fuels (i.e., gasoline, diesel, and jet fuel) on a hydrogen content basis (based on discussion in 19) across the scenarios, conventional crudes' gasoline GHG emissions estimates range from 6.2 to 22 g CO_2eq/MJ of gasoline, and OS products' GHG emissions estimates range from 9.0 to 36 g CO_2eq/MJ of gasoline. Diesel GHG emissions estimates for conventional crudes and OS products range from 2.3 to 26 g CO_2eq/of MJ of diesel and 3.3 to 36 g CO_2eq/MJ of diesel, respectively. Figure S5 illustrates gasoline and diesel GHG emissions estimates for the scenario analysis. The implications of different allocation methods are explored in the SI.

Overall refinery GHG emissions (i.e., per bbl or MJ of crude) will be greatly influenced by the refinery configuration employed. However, for some crudes, when the emissions are calculated on a per product basis (e.g., per MJ gasoline) the impact of the configuration can play a lesser role as the significant differences in emissions between configurations are tempered by the differences in the amount of product produced (Figure S5). For example, if light sweet SCO is processed in a deep conversion refinery instead of a hydroskimming refinery, it will undergo more intense processing and therefore result in both higher overall emissions as well as a higher volume of gasoline produced. This difference has implications in terms of potentially providing an incentive for one action (e.g., sell SCO to hydroskimming refinery) if the crude is being evaluated on an overall crude basis (i.e., all products) and a second action if it is evaluated on an individual product basis (e.g., sell SCO to deep conversion refinery).

Comparison with Other Studies. In the absence of a public-domain refinery modeling tool, the use of regression models based on sulfur content and API gravity of the whole crude is being generalized for the purposes of modeling crude quality effects on refinery GHG emissions.[49] Some studies assume a linear relationship[18,22,25] while others assume a quadratic relationship[15] for the regression model, and consensus has not yet been reached. The results reported by previous refinery models/studies are within the ranges calculated by the PRELIM model (Figures S6−S7). Figure 3 demonstrates that the degree of correlation between the gasoline GHG emissions estimates from refining and the whole crude API gravity is affected by assumptions about configuration and process energy requirements. This is also true for diesel (Figure S8). In addition, sulfur does not make a large contribution to predicting GHG emissions. PRELIM can replicate the results of previous studies when similar assumptions are made. However, the figure shows that previous studies do not provide the full range of emissions possible.

■ DISCUSSION

PRELIM goes beyond public LC-based modeling approaches by adding the detail required to evaluate the impact of crude quality and refinery configuration on energy use and GHG emissions of refining while remaining a transparent spreadsheet-based tool. The model is based on public data but is validated by confidential operating data and expert review. This approach allows for improved confidence in the model results while providing the detail required for users to replicate the results and make use of the framework. It provides more detailed calculations (e.g., includes a hydrogen balance at a process unit level) than current LC models but with less detail (thereby increasing manageability/transparency) than proprietary refinery energy optimization models. PRELIM is capable of replicating the findings from more complex models with an overall margin deviation below 10% in almost all cases, which is within the bounds of typical LC inventories.[41−43] PRELIM provides a data framework that can be integrated as a module in Well-To-Wheel models and used by academia, industry, and government to develop a consistent reporting structure for data in support of GHG emissions modeling for policy purposes.

Further model development should include the establishment of a statistical relationship between hydrogen content, aromatic hydrocarbon content, and the emissions intensity of processing a specific crude. The current assumption of processing all crudes to the same intermediate product specification may overestimate energy requirements for high quality crudes in medium and deep conversion refineries. Also, it is recommended that opportunities to improve the accuracy of hydrogen requirement estimates be explored. The inclusion of modeling crude input slates instead of individual crudes, economic data, and other environmental impacts, as well as tools for decision-making analysis such as Monte Carlo simulation, will enhance model capabilities.

The PRELIM application presented in this paper demonstrates that crude quality and the selected process units employed (i.e., the refinery configuration), as well as the energy efficiency of the process units, all play important roles in determining the energy requirements and emissions of processing a crude. The unique amount of hydrogen required to process each crude is dictated by the quality of the crude entering the refinery. It can be the major contributor to refinery energy use and GHG emissions for every crude. Therefore, this should be a key parameter used in estimating emissions. Emissions associated with providing the hydrogen required should also be the focus of emissions reductions at refineries.

This analysis provides insights that can help to inform emissions reductions decisions at refineries. Based on this analysis, the top three ways to reduce GHG emissions at refineries processing heavier crude will be to (1) reduce the amount of hydrogen consumed, (2) increase hydrogen production efficiency (and/or lower GHG emissions intensity of hydrogen production), and (3) capture CO_2 from the most concentrated, highest volume sources (i.e., FCC and SMR). All of these alternatives involve several technologies that require further study and can be included as new modules in future versions of PRELIM. Moreover, the results suggest that there may be a "preferred" configuration to process a specific crude. Opportunities for reductions in GHG emissions such as processing high quality crudes in low complexity refineries (hydroskimming and medium conversion) instead of deep conversion refineries could be investigated. However, these opportunities will be limited by the decreasing number of low complexity refineries in North America available to process these types of crude feedstocks. This serves as a reminder that the range of refinery emissions for OS products, as for other crudes, is linked to refining industry investments made over the next decade.

This analysis substantiates the claim that more accurate assessments of refinery emissions are required to better inform LC-based policies and avoid potential unintended consequences. Putting the refinery emissions variations into context, the variability in GHG emissions in the refining stage that results from processing crudes of different qualities is as significant as the magnitude expected in upstream operations (e.g., in this paper, the variability is up to 14 g CO_2eq/MJ of crude, or up to 11 g CO_2eq/MJ of gasoline and 19 CO_2eq/MJ of diesel—based on the full range of base case crudes). If crudes are run through the same configuration, refinery performance (defined by efficiency of energy use) introduces important variation. The PRELIM application demonstrated up to 43% deviation in the GHG emissions burden attributed to a crude solely by varying the efficiency of the process units in one configuration. This implies that impacts of crude quality and refinery configuration should be modeled in the refining stage of LC analyses of petroleum-based fuels. Also, climate policies based on LCA should equally engage both parts of the supply chain (i.e., crude production/processing/transport and refining stages) to encourage the most cost-effective GHG emissions mitigation pathways. Directives such as the current High Carbon Intensity Crude Oil (HCICO) provision in the CA-LCFS that do not explicitly include these differences in the definition and principles/goals could lead to unintended consequences.[50,51]

The results also show that API gravity and sulfur content of the whole crude are not sufficient to characterize the refinery energy use and GHG emissions specific to a crude. The use of these simple metrics within policies that are intended to differentiate the LC emissions of different crudes can also lead to unintended consequences. Energy efficiency of the process units and refinery configuration play a large role in explaining the variation in possible estimates. Ideally, the assay data like those presented in PRELIM should be collected and used as it improves accuracy beyond whole crude properties. However, since these data tend to be highly proprietary, we recommend that at minimum the crude distillation curve and the hydrogen content of the crude fractions be accounted for. Future efforts should focus on striking the balance between reporting the best data in a transparent way and protecting sensitive information. A starting point could be exploring the use of refining industry data and methods such as the Nelson index and/or Solomon energy efficiency index to simplify the characterization of refinery configurations;[52−55] however, an innovative approach will also be needed to represent crude quality parameters.

The PRELIM application shown in this paper demonstrates the strengths of detailed process modeling for understanding and assessing petroleum refinery GHG emissions sources with the ultimate goal of more informed decisions regarding the increased use of heavy oil in North America.

■ ASSOCIATED CONTENT

Supporting Information

Details on literature review, methods, and results. This material is available free of charge via the Internet at http://pubs.acs.org.

■ AUTHOR INFORMATION

Corresponding Author

*E-mail: jbergers@ucalgary.ca; phone: 403-220-5265.

Notes

The authors declare no competing financial interest.

■ ACKNOWLEDGMENTS

We thank Natural Resources Canada, Alberta Innovates-Energy and Environment Solutions, and Oil Sands Industry Consortium for financial support and insights helpful to the research. We also thank Damien Hocking (MEG Energy), Nicolas Choquette-Levy (University of Calgary), and Prof. Heather MacLean, Jennifer McKellar, and Diana Pacheco (University of Toronto) for helpful feedback on the research. Any opinions, findings, and recommendations expressed in this material are those of the authors.

■ REFERENCES

(1) EPA. *Greenhouse Gas Emissions from Large Facilities*; U.S. Environmental Protection Agency: Washington, DC, 2012.

(2) Gale, J., Sources of CO_2. In *Carbon Dioxide Capture and Storage. Intergovernmental Panel on Climate Change*; Metz, B., Davidson, O., de Coninck, H., Loos, M., Meyer, L., Eds.; Cambridge University Press: New York, 2005; pp 75−104.

(3) van Straelen, J.; Geuzebroek, F.; Goodchild, N.; Protopapas, G.; Mahony, L. CO_2 capture for refineries, a practical approach. *Int. J. Greenhouse Gas Control* **2010**, *4* (2), 316−320.

(4) Bevilacqua, M.; Braglia, M. Environmental efficiency analysis for ENI oil refineries. *J. Cleaner Prod.* **2002**, *10* (1), 85−92.

(5) *Available and Emerging Technologies for Reducing Greenhouse Gas Emissions from the Petroleum Industry*; U.S. Environmental Protection Agency: NC, 2010; http://www.epa.gov/nsr/ghgdocs/refineries.pdf. Last accessed September 2012.

(6) EPA. *U.S. Greenhouse Gas Inventory*; 2011.

(7) EPA. *Technical Support Document for the Petroleum Refining Sector: Proposed Rule for Mandatory Reporting of Greenhouse Gases*; 2008.

(8) EIA. *Petroleum and Other Liquids: Imports/Exports & Movements*; IU.S. Department of Energy, Energy Information Administration, 2011.

(9) Sword, L. Refinery Investments Align With Oil Sands Supplies to 2015. *Oil Gas J.* **2008**, *106* (31), 4.

(10) *Clean Final Regulation Order (Part 1 and 2) to Implement the Low Carbon Fuel Standard*; 2009. http://www.arb.ca.gov/regact/2009/lcfs09/lcfscombofinal.pdf. Last accessed September 2012.

(11) EIA. *International Energy Statistics*; U.S. Department of Energy, Energy Information Administration: Washington, DC, 2011.

(12) EIA. Canada Energy Data, Statistics and Analysis - Oil, Gas, Electricity, Coal. In *Country Analysis Briefs: Canada*; U.S. Department of Energy, Energy Information Administration: Washington, DC, 2011.

(13) *GHGenius. A model for life cycle assessment of transportation fuels.* http://www.ghgenius.ca/. Last accessed September 2012.

(14) *The Greenhouse Gases, Regulated Emissions, and Energy Use in Transportation (GREET) Model.* http://greet.es.anl.gov/. Last accessed September 2012.

(15) *Crude Oil Production Update for GHGenius*; Delta, BC, 2007; http://www.ghgenius.ca/reports.php?tag=Crude%20Oil. Last accessed September 2012.

(16) Wang, M.; Lee, H.; Molburg, J. Allocation of Energy Use in Petroleum Refineries to Petroleum Products. Implications for Life-Cycle Energy Use and Emission Inventory of Petroleum Transportation Fuels. *Int. J. Life Cycle Assess.* **2004**, *9* (1), No. 10.10.1007/BF02978534.

(17) Alberta Innovates. *Comparison of North America and Imported Crude Oil Life Cycle GHG Emissions*; 2009. http://extranet.aet.alberta.ca/SIIS.public/EIPA/BasicSearch.aspx?ss=tiax&p=1#. Last accessed September 2012.

(18) Karras, G. Combustion Emissions from Refining Lower Quality Oil: What Is the Global Warming Potential? *Environ. Sci. Technol.* **2010**, *44* (24), 9584−9589.

(19) Bredeson, L.; Quinceno-Gonzalez, R.; Riera-Palou, X.; Harrison, A. Factors driving refinery CO_2 intensity, with allocation into products.

Int. J. Life Cycle Assess. **2010**, *15* (8), No. 10.10.1007/s11367-010-0204-3.

(20) McCann, T.; Magee, P. Crude Oil Greenhouse Gas Life Cycle Analysis Helps Assign Values for CO_2 Emissions Trading. *Oil Gas J.* **1999**, *97* (8), 38(1).

(21) T.J. McCann and Associates, Ltd. *Typical Heavy Crude and Derivative Greenhouse Life Cycles in 2007*; 2001.

(22) *Life Cycle Assessment Comparison of North America and Imported Crudes*; 2009. http://eipa.alberta.ca/media/39640/life%20cycle%20analysis%20jacobs%20final%20report.pdf.

(23) *Life Cycle Analysis of North American and Imported Crude Oils. Post-Workshop: Stakeholder Input*; 2009. http://www.albertainnovates.ca/media/15768/post%20workshop%20stakeholder%20input.pdf. Last accessed November 2011.

(24) Parkash, S. *Refining Processes Handbook*; Elsevier: Burlington, 2003.

(25) *An Evaluation of the Extraction, Transport and Refining of Imported Crude Oils and the Impact on Life Cycle Greenhouse Gas Emissions*; National Energy Technology Laboratory (NETL), 2009; http://www.netl.doe.gov/energy-analyses/pubs/PetrRefGHGEmiss_ImportSourceSpecific1.pdf. Last accessed September 2012.

(26) *Development of Baseline Data and Analysis of Life Cycle Greenhouse Gas Emissions of Petroleum-Based Fuels*; DOE/NETL-2009/1346; National Energy Technology Laboratory (NETL), November 26, 2008; http://www.netl.doe.gov/energy-analyses/pubs/NETL%20LCA%20Petroleum-based%20Fuels%20Nov%202008.pdf. Last accessed September 2012.

(27) Rebitzer, G.; Ekvall, T.; Frischknecht, R.; Hunkeler, D.; Norris, G.; Rydberg, T.; Schmidt, W. P.; Suh, S.; Weidema, B. P.; Pennington, D. W. Life cycle assessment: Part 1: Framework, goal and scope definition, inventory analysis, and applications. *Environ. Int.* **2004**, *30* (5), 701−720.

(28) Rebitzer, G. *Enhancing the Application Efficiency of Life Cycle Assessment for Industrial Use*; École Polytechnique Fédérale de Lausanne: Berlin, Allemagne, 2005.

(29) Bras-Klapwijk, R. Procedures and tools for generating and selecting alternatives in LCA. *Int. J. Life Cycle Assess.* **2003**, *8* (5), No. 266-272.10.1007/bf02978918.

(30) International Standards Organization. *ISO 14041: Environmental Management - Life Cycle Assessment - Goal and Scope Definition and Inventory Analysis*; 1998.

(31) Szklo, A.; Schaeffer, R. Fuel specification, energy consumption and CO_2 emission in oil refineries. *Energy* **2007**, *32* (7), 1075−1092.

(32) Baumann, H.; Tillman, A.-M. *The Hitch Hicker's Guide to LCA. An Orientation in Lifecycle Assessment Methodology and Application*; Studentlitteratur: Lund, Sweden, 2004.

(33) *Inventory of U.S. Greenhouse Gas Emissions and Sinks:1990 − 2010*; U.S. Environmental Protection Agency: Washington, DC, 2012. http://www.epa.gov/climatechange/Downloads/ghgemissions/US-GHG-Inventory-2012-Main-Text.pdf. Last accessed September 2012.

(34) *Development of Baseline Data and Analysis of Life Cycle Greenhouse Gas Emissions of Petroleum-Based Fuels*; DOE/NETL-2009/1346; National Energy Technology Laboratory, 2008.

(35) Gary, J.; Handwerk, G.; Kaiser, M. *Petroleum Refining Technology and Economics*, 5th ed.; CRC Press: New York, 2007.

(36) Maples, R. *Petroleum Refinery Process Economics*, 2nd ed.; PennWell Corp, 2000.

(37) *Life Cycle Assessment of Hydrogen Production via Natural Gas Steam Reforming*; NREL/TP-570-27637; National Renewable Energy Laboratory, 2001; http://www.nrel.gov/docs/fy01osti/27637.pdf. Last accessed September 2012.

(38) Karpe, P. Refinery Utilities: Follow-up Conference call. Abella, J., Calgary, 2009.

(39) Castañeda, L. C.; Muñoz, J. A. D.; Ancheyta, J. Comparison of approaches to determine hydrogen consumption during catalytic hydrotreating of oil fractions. *Fuel* **2011**, *90* (12), 3593−3601.

(40) Crudemonitor.ca_program. Canadian Crude Quality Monitoring Program http://www.crudemonitor.ca/home.php. Last accessed September 2012. In Monthly, Crude Quality Inc. The crudemonitor.ca program operates under a support model representing key stakeholders across the industry including the Canadian Association of Petroleum Producers (CAPP) and Small Explorers and Producers Association of Canada (SEPAC). 2010.

(41) Lloyd, S. M.; Ries, R. Characterizing, Propagating, and Analyzing Uncertainty in Life-Cycle Assessment: A Survey of Quantitative Approaches. *J. Ind. Ecol.* **2007**, *11* (1), No. 161-179.10.1162/jiec.2007.1136.

(42) Jiménez-González, C.; Overcash, M. Life Cycle Inventory of Refinery Products: A Review and Comparison of Commercially Available Databases. *Environ. Sci. Technol.* **2000**, *34* (22), 4789−4796, DOI: 10.1021/es991140f.

(43) Weidema, B. P.; Wesnæs, M. S. Data quality management for life cycle inventories—An example of using data quality indicators. *J. Cleaner Prod.* **1996**, *4* (3−4), 167−174.

(44) Stratiev, D.; Tzingov, T.; Shishkova, I.; Dermatova, P. Hydrotreating units chemical hydrogen consumption analysis: A tool for improving refinery hydrogen management. In *44th International Petroleum Conference*, Bratislava, Slovak Republic, 2009.

(45) Höjerr, M.; Ahlroth, S.; Dreborg, K.-H.; Ekvall, T.; Finnveden, G. r.; Hjelm, O.; Hochschorner, E.; Nilsson, M. n.; Palm, V. Scenarios in selected tools for environmental systems analysis. *J. Cleaner Prod.* **2008**, *16* (18), 1958−1970.

(46) Part I Oil Refining, Environmental Considerations. In *Wiley Critical Content: Petroleum Technology*; Wiley-Interscience, 2007; Vol. *1*, pp 347−352.

(47) Marano, J. J. GHG profiles for distillate fuels produced from conventional petroleum, oil sands, shale oil and XtL. *Energy Procedia* **2009**, *1* (1), 3795−3799.

(48) Charpentier, A. D.; Kofoworola, O.; Bergerson, J. A.; MacLean, H. L. Life Cycle Greenhouse Gas Emissions of Current Oil Sands Technologies: GHOST Model Development and Illustrative Application. *Environ. Sci. Technol.* **2011**, *45* (21), 9393−9404.

(49) Brandt, A. R. Variability and Uncertainty in Life Cycle Assessment Models for Greenhouse Gas Emissions from Canadian Oil Sands Production. *Environ. Sci. Technol.* **2012**, *46* (2), 1253−1261.

(50) Low Carbon Fuel Standard (LCFS) Supplemental Regulatory Advisory 10-04B; 2011. http://www.arb.ca.gov/fuels/lcfs/123111lcfs-rep-adv.pdf. Last accessed September 2012.

(51) Air Resources Board. *Low Carbon Fuel Standard: 2011 Program Review Report. IX Section: High Carbon Intensity Crude Oil. Working Draft Version 1*; California Air Resources Board, 2011; pp 137−145.

(52) *Methodology for the Free Allocation of Emission Allowances in the EU ETS Post 2012: Sector Report for the Refinery Industry*; European Commission, 2009. http://ec.europa.eu/clima/policies/ets/benchmarking/docs/bm_study-lime_en.pdf. Last accessed September 2012.

(53) Proops, K. R. EII Analysis Methodology: Gap Analysis vs World's Best EII. In *2008 Fuel Refinery Performance Analysis*; HSB Solomon Associates LLC, 2010.

(54) Proops, K. R. *Conversion Unit Yield Analysis*; HSB Solomon Associates LLC, 2010.

(55) He, C. *CEI Analysis Methodology: Gap Analysis vs World's Best CEI*; HSB Solomon Associates LLC, 2010.

(56) Wise, T. Markets evolving for oil sands bitumen, synthetic crude. *Oil Gas J.* **2008**, *106* (25), 6.

(57) Ekelund, M. Bitumen Markets & Economics. In *National Energy Board: Energy Futures 2010*; Canada National Energy Board: Ottawa, 2010.

(58) Argonne National Laboratory. *Greenhouse Gases, Regulated Emissions, and Energy Use in Transportation model GREET version 1.8 c.0*; 2009.

(59) *Compendium of Greenhouse Gas Emissions Methodologies for the Oil and Gas Industry*; American Petroleum Institute, 2004. http://www.api.org/ehs/climate/new/upload/2004_COMPENDIUM.pdf. Last accessed November 2011.

(60) O'Connor, D. (S&T)2 Consulants Inc. *GHGenius version 3.15*; Natural Resources Canada, 2009.

(61) *Update of Oil Refining Data in GHGenius*; Natural Resources Canada: Delta, BC, June 2011. http://www.ghgenius.ca/reports/GHGeniusOilRefiningUpdaterev.pdf. Last accessed September 2012.