General Service Car Fittings 101

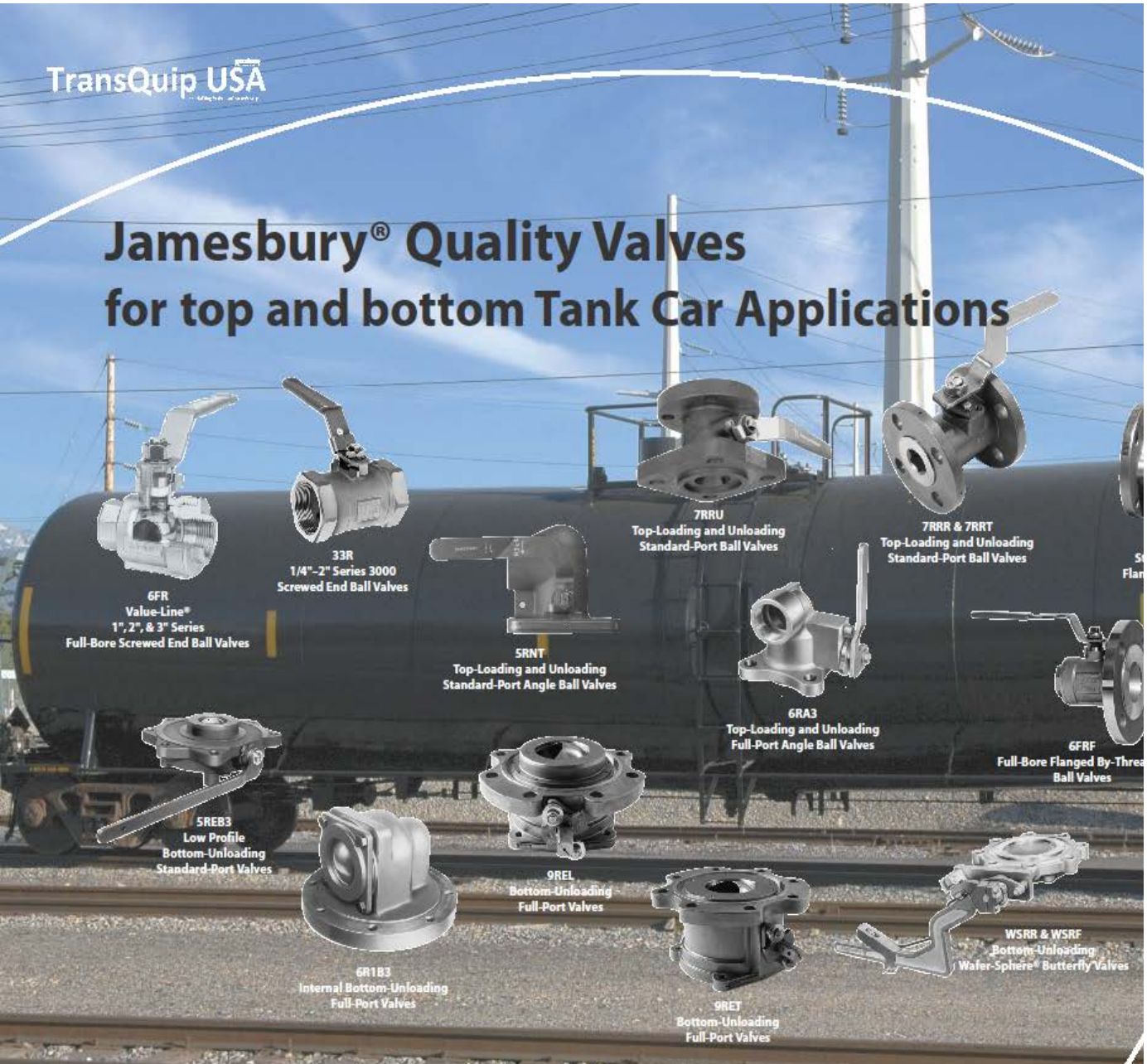

Goal for this Presentation

- Provide a understanding of the typical Service Equipment (VALVES and FITTINGS) used and it's intended use for General Service Cars.
- We will Cover…….

1. Top Valves and Fittings
2. Safety Relief Valves / Pressure Relief Devices
3. Vacuum Relief Valves
4. Bottom Valves and Fitting

Ref. MSRP C-III (M-1002) Appendix A.

1. Top Valves and Fittings

6FR
NPT X NPT

Flanged X Flanged

6FRF
Flanged X NPT

Plug & Chain Assy.

Prior 10/2011 Top Fittings Arrangement on NCNI Car

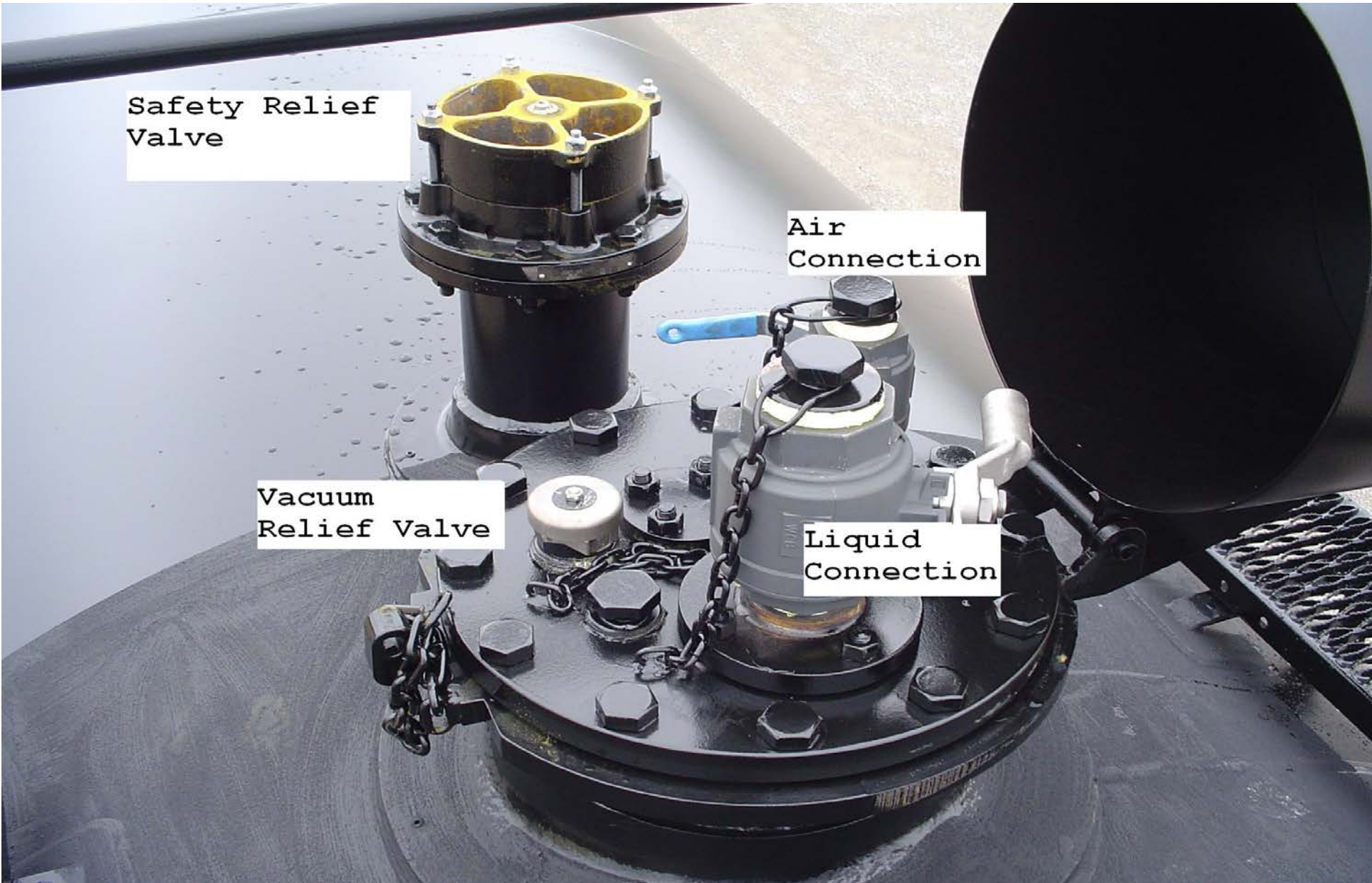

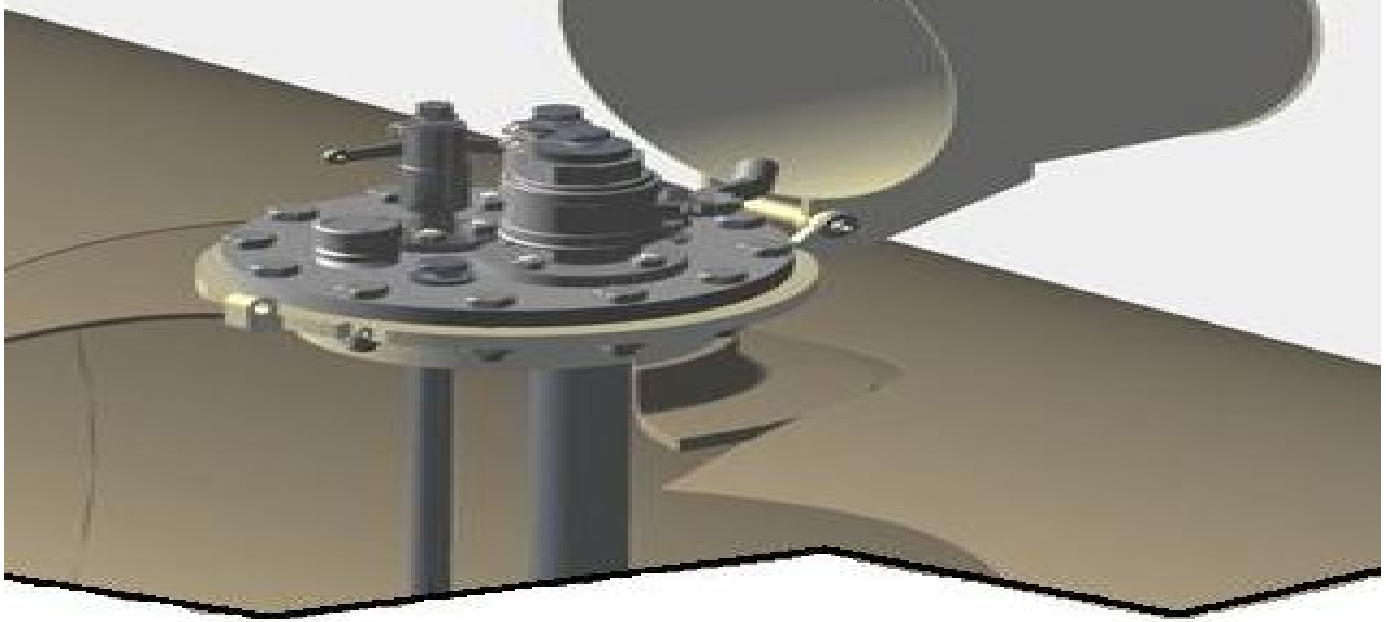

Show GP Top Loading

3”, 2”, 1” 6FR Screw Valves

Not allowed on NEW Cars Built
After July 1st 2013

Prior 10/2011 Top Fittings Arrangement on CI Car

Post 10/2011 Top Fittings Arrangement on NCNI Car

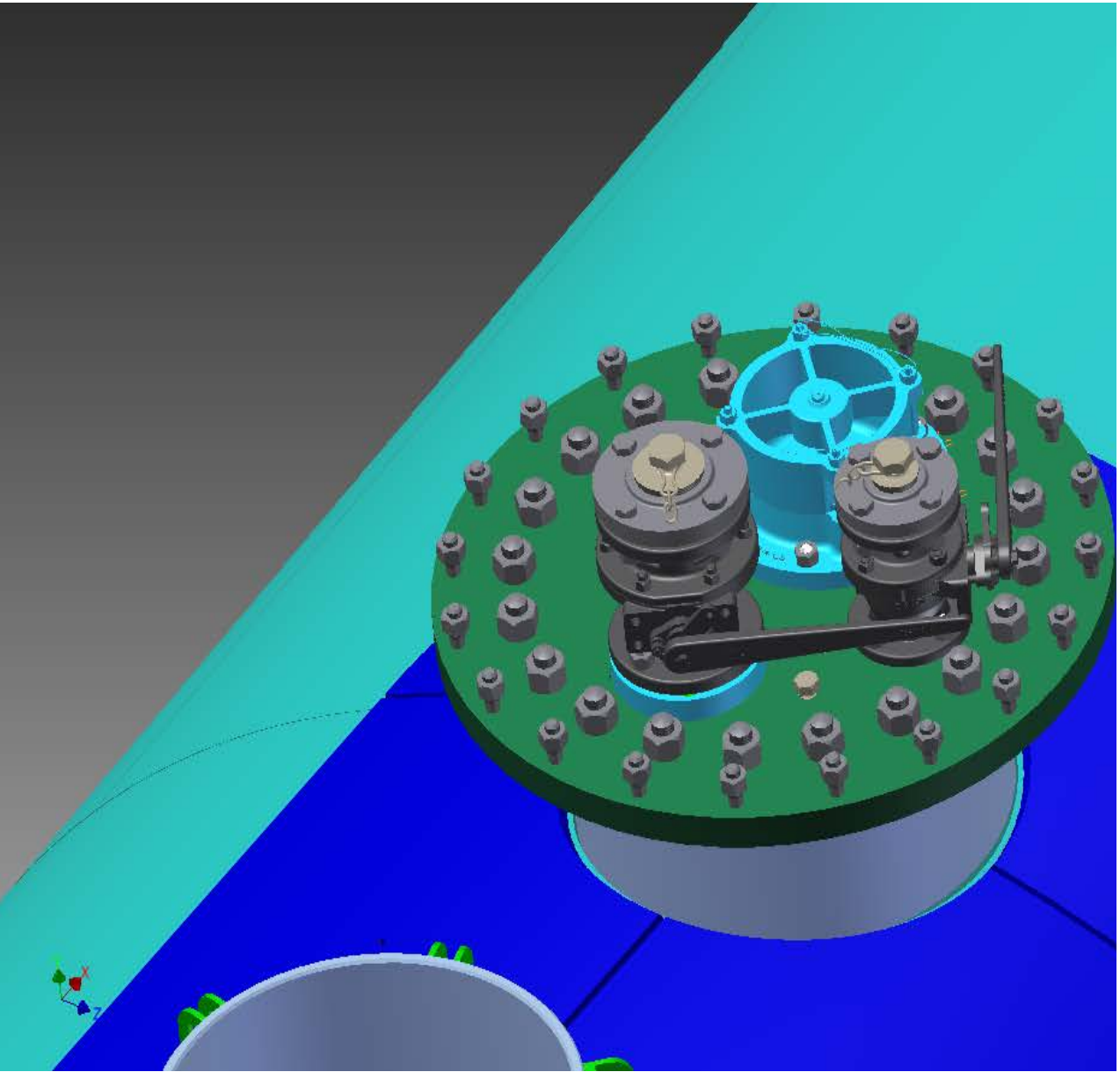

Flanged Valves with NPT Connecting Flange

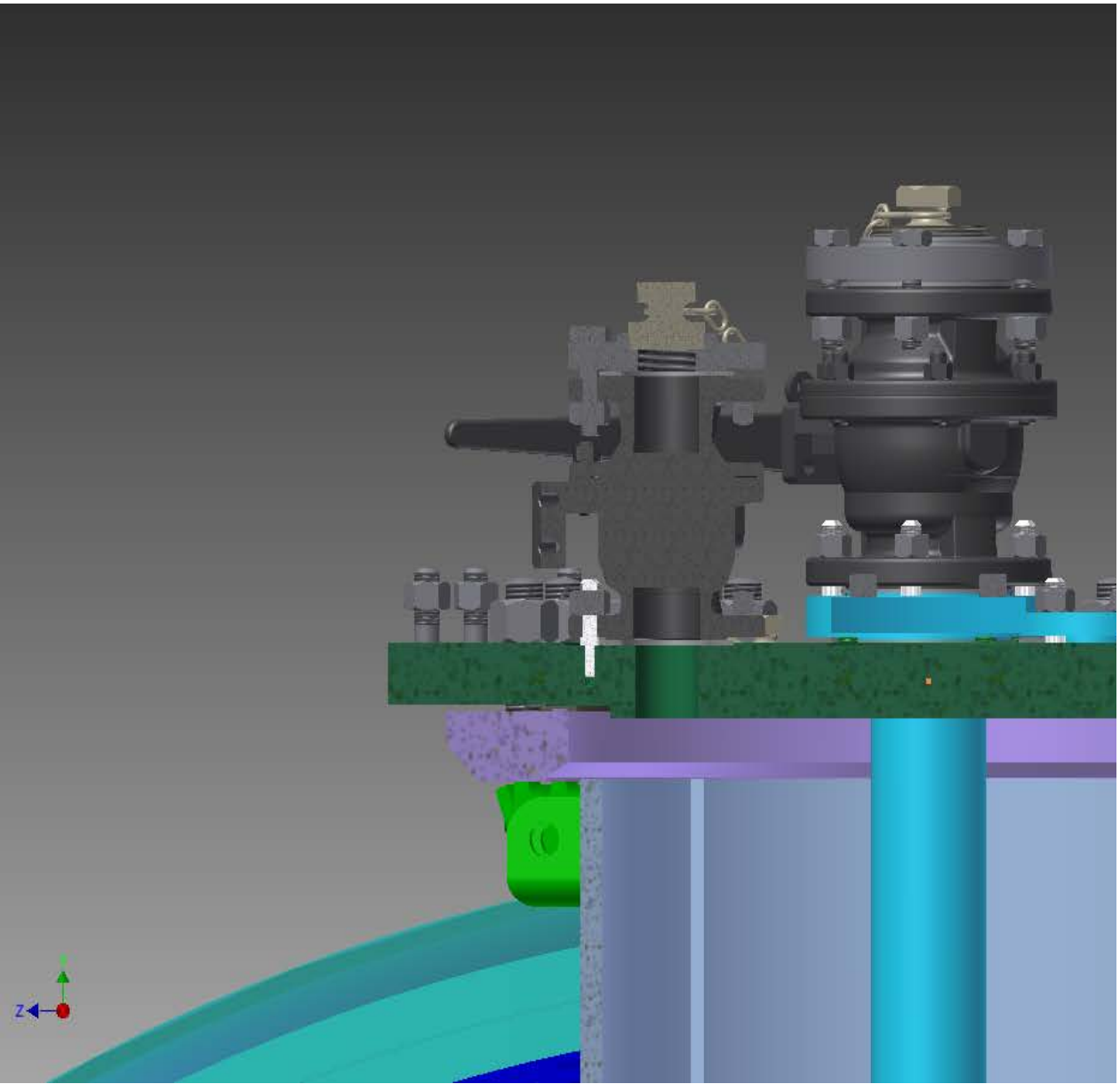

2” and 3” Flanged X NPT Valve

2” and 3” Flanged X NPT Valve

2” and 3” Flanged X NPT Markings

Post 10/2011 Top Fittings Arrangement on NCNI Car with NPT Connecting Flange

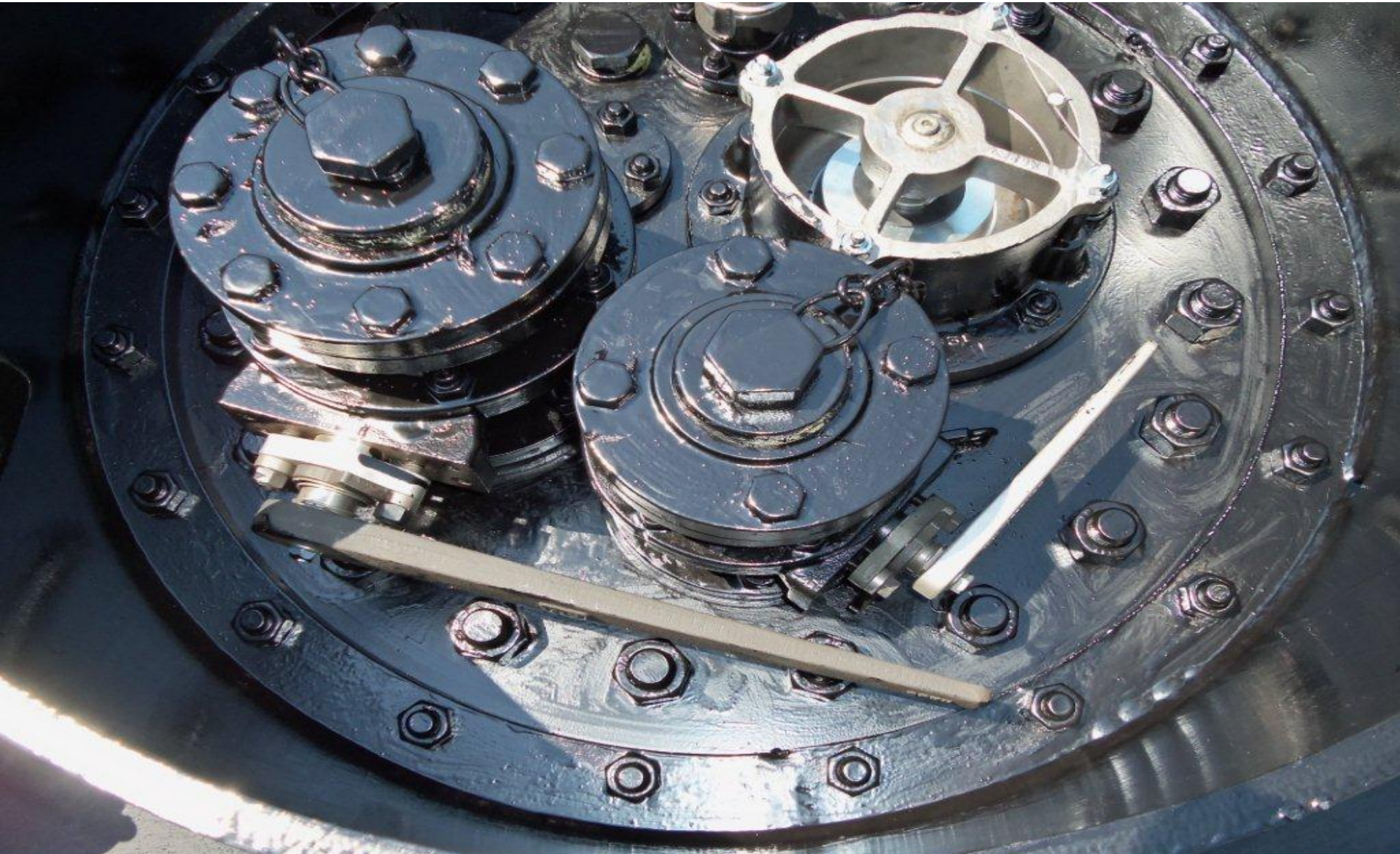

2” NPT Quick Connect Assy.

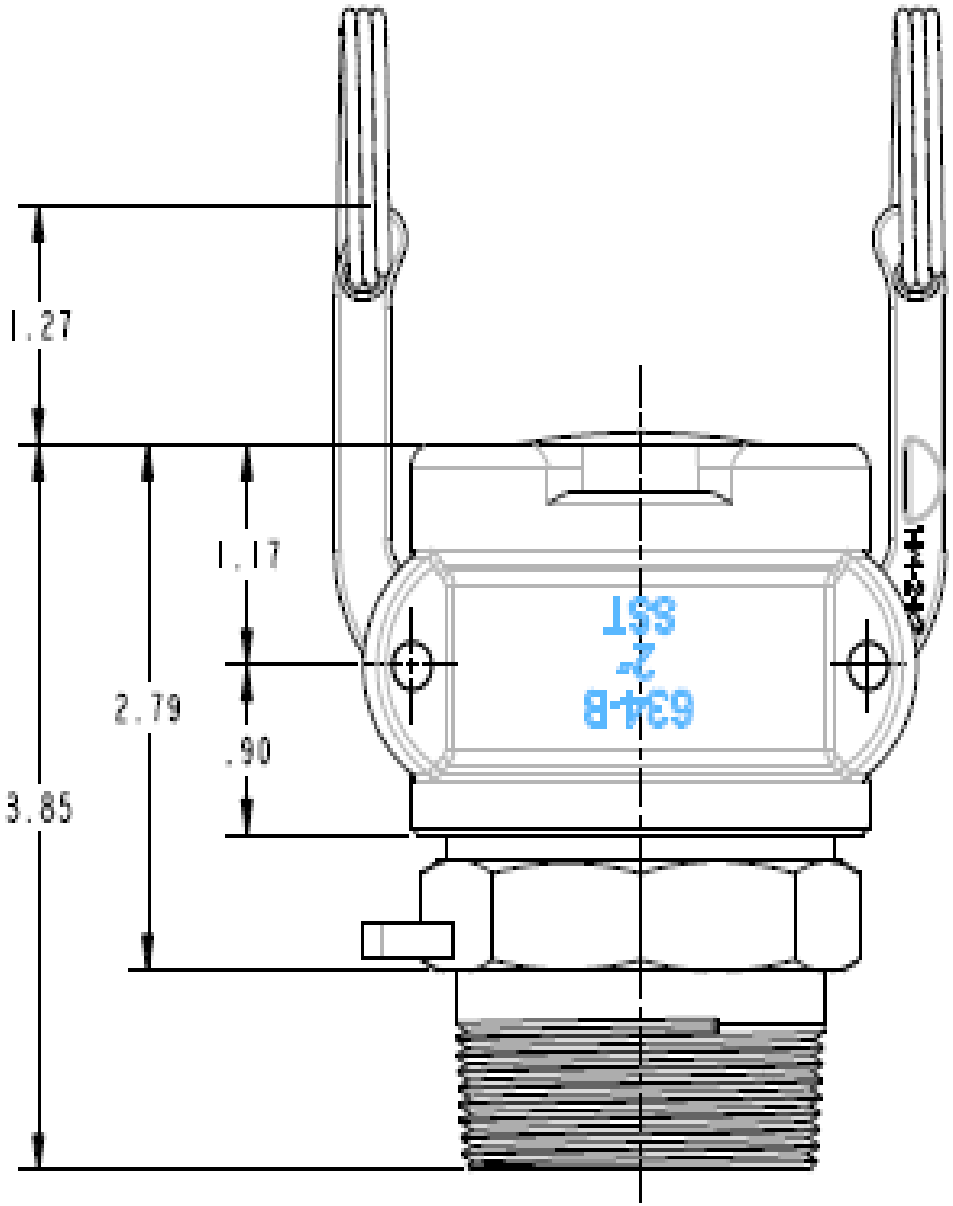

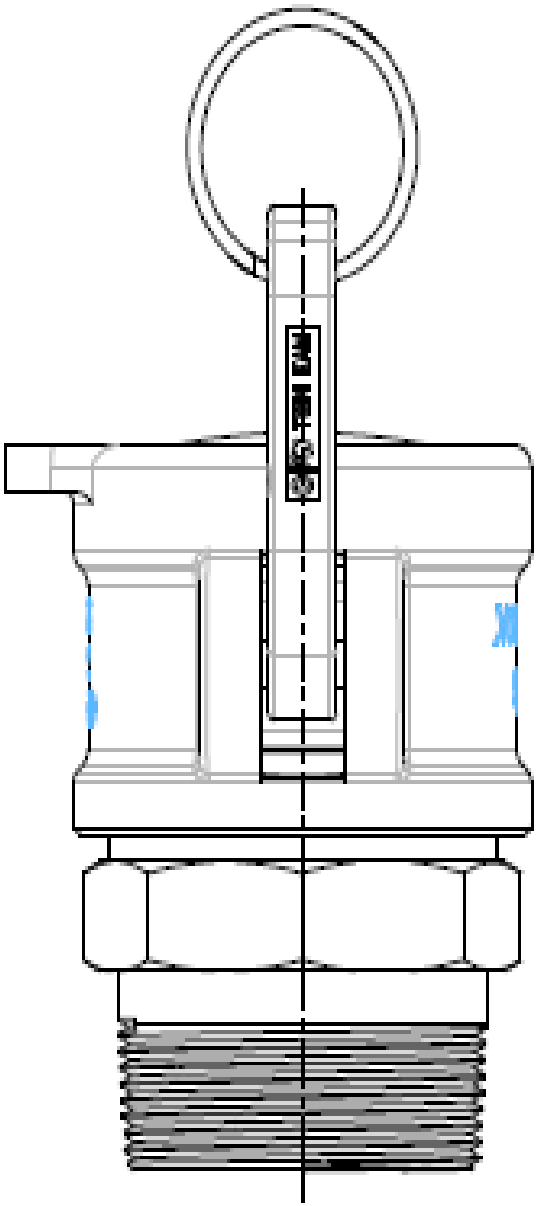

3” NPT Quick Connect Assy.

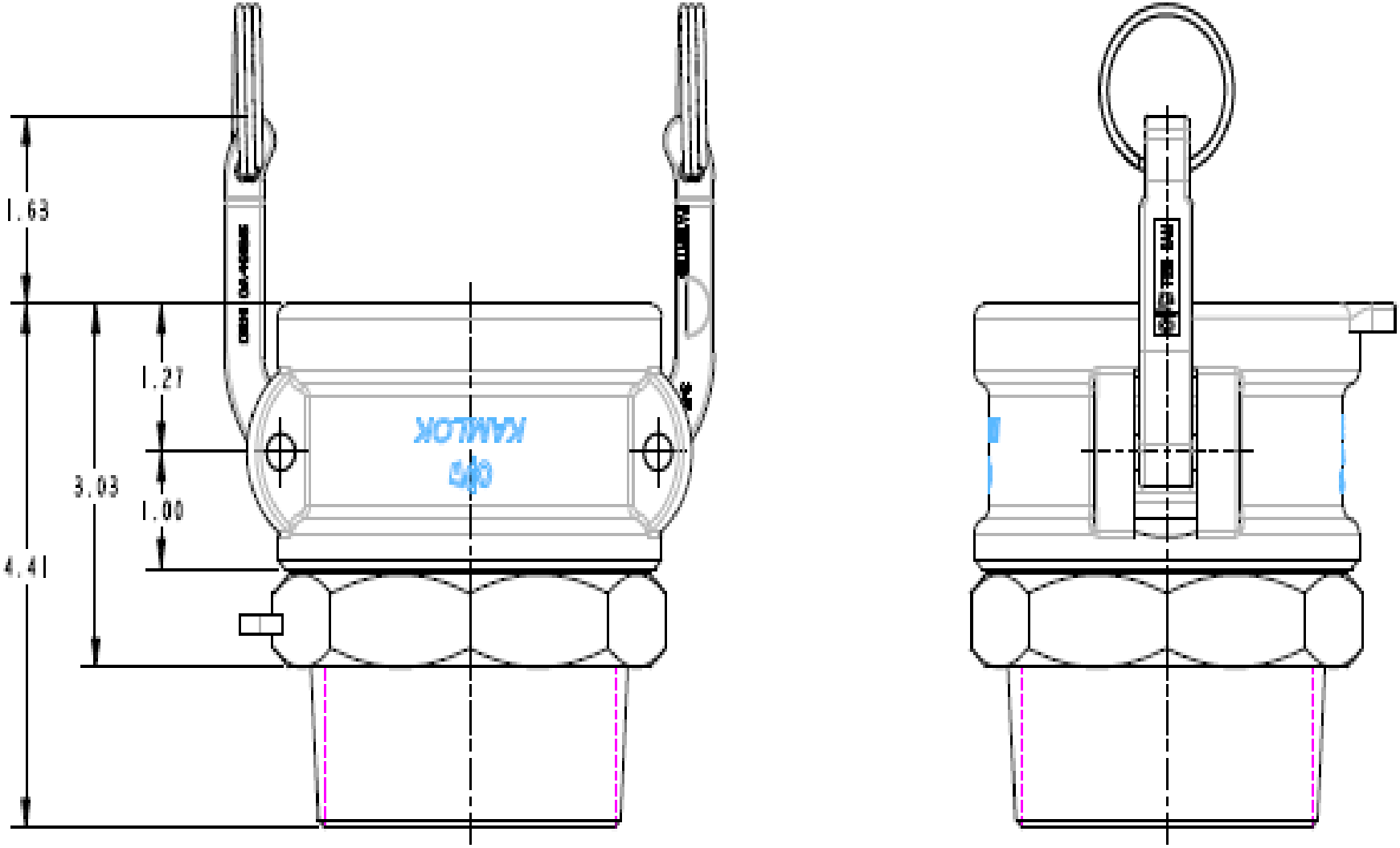

3” X 4” Flanged Quick Connect Assy.

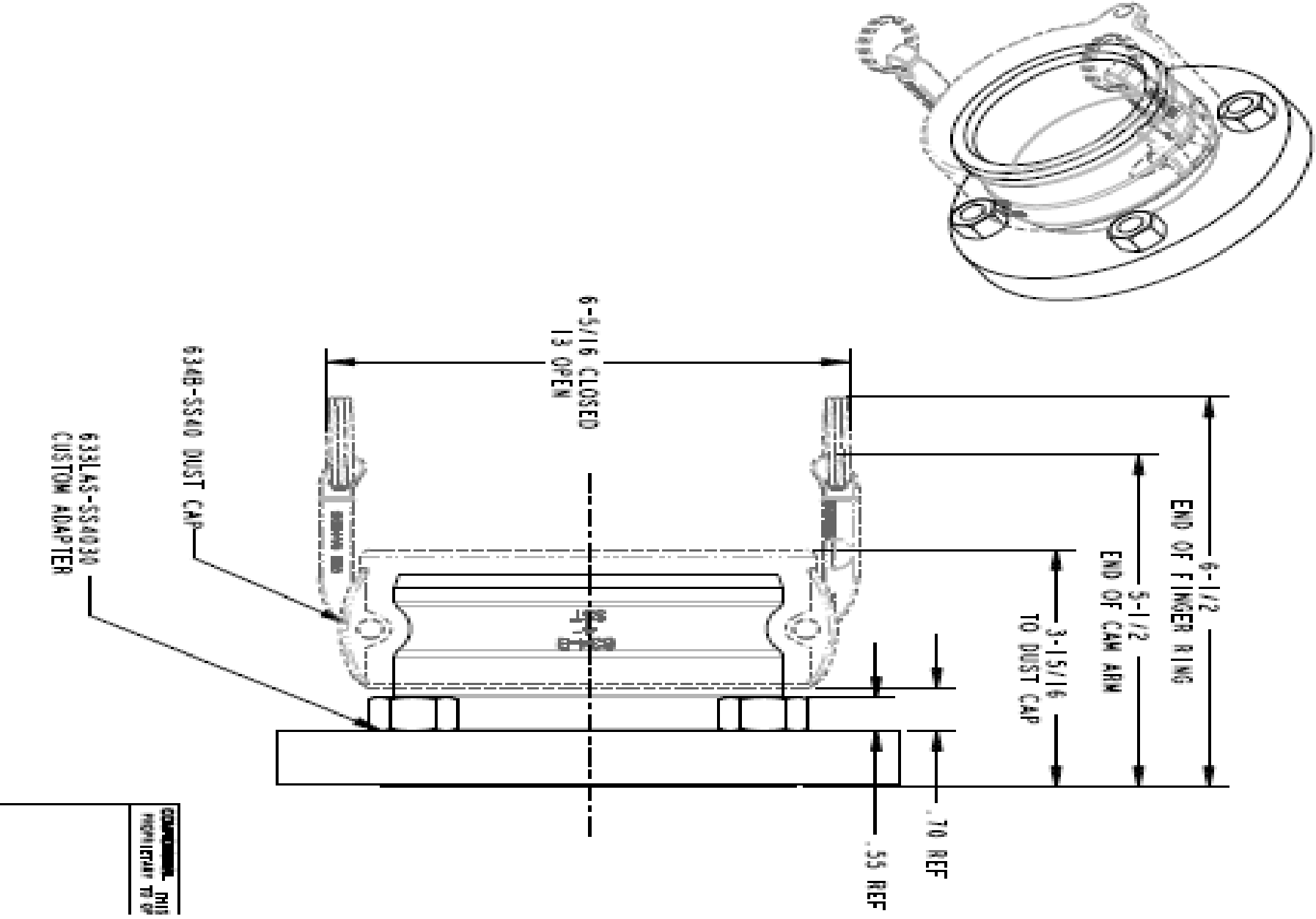

Flanged Valve with Quick Connect

Post 10/2011 Top Fittings Arrangement on NCNI Car

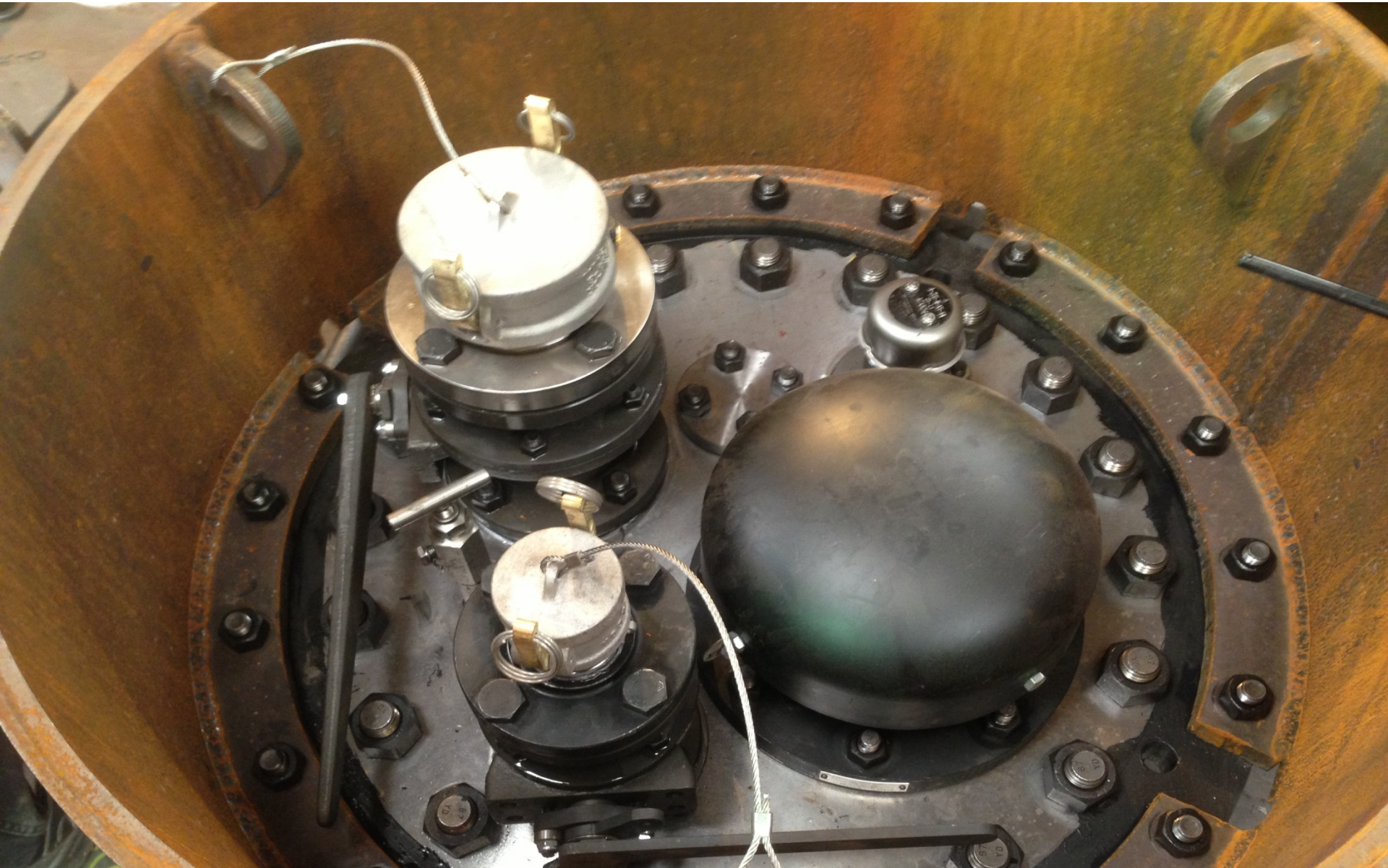

Fill
3” OPW
Camvalok
Fitting
Vent
2” OPW
Camvalok
Fitting

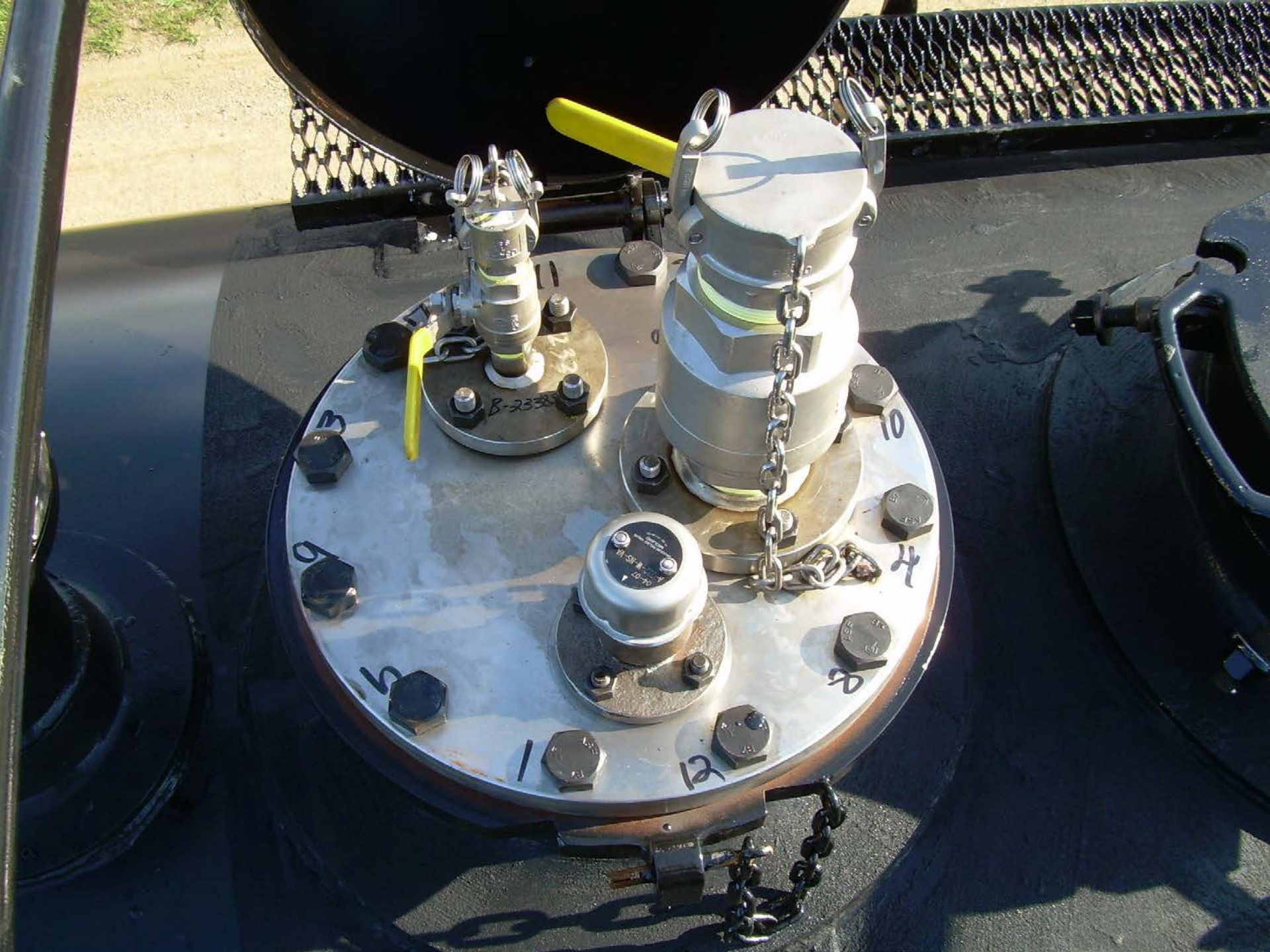
B-2338
3
10
9
4
5
8
1
12

Other Top Fittings Arrangements

Other Top Fittings Arrangements

Other Top Fittings Arrangements Cont.

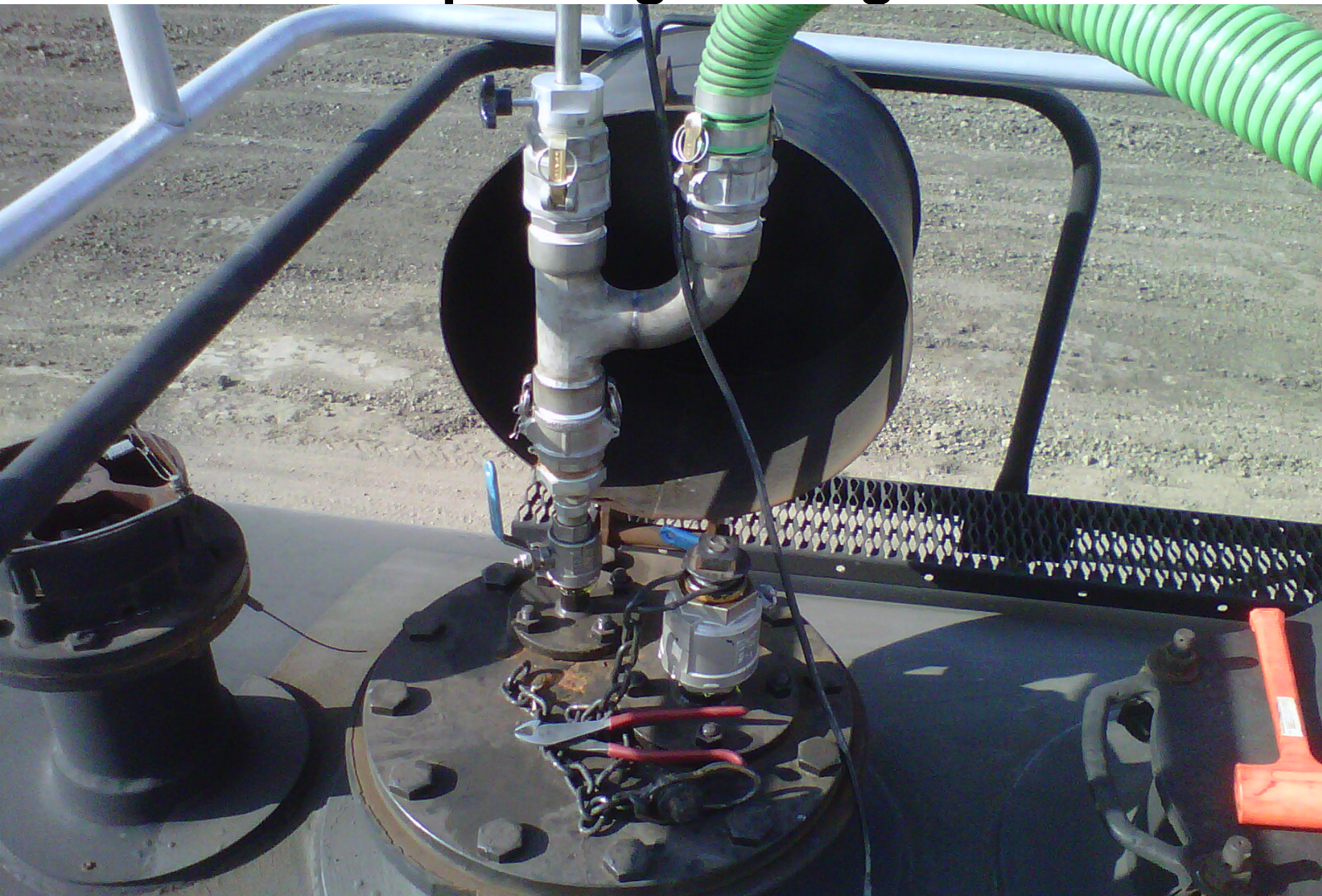

Other Top Fittings Arrangements Cont.

2. Safety Relief Valve / Pressure Relief Device

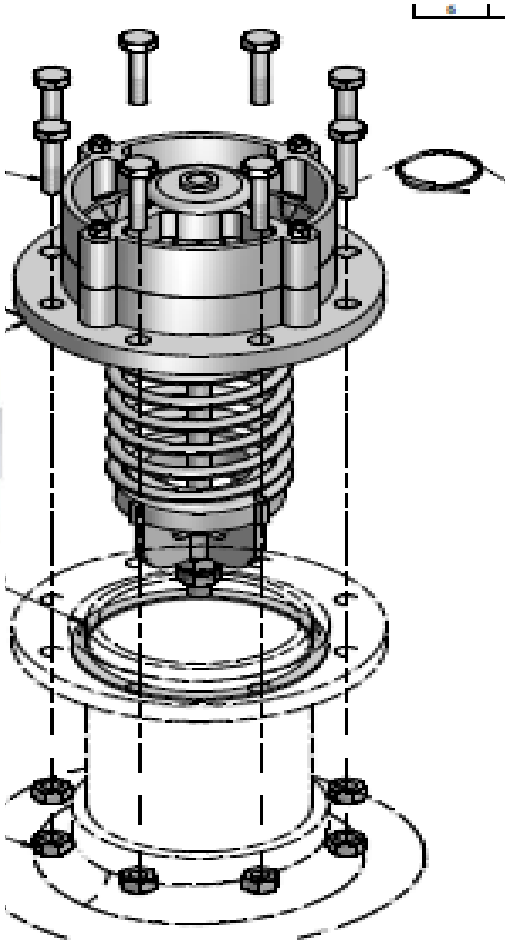

External PRD's

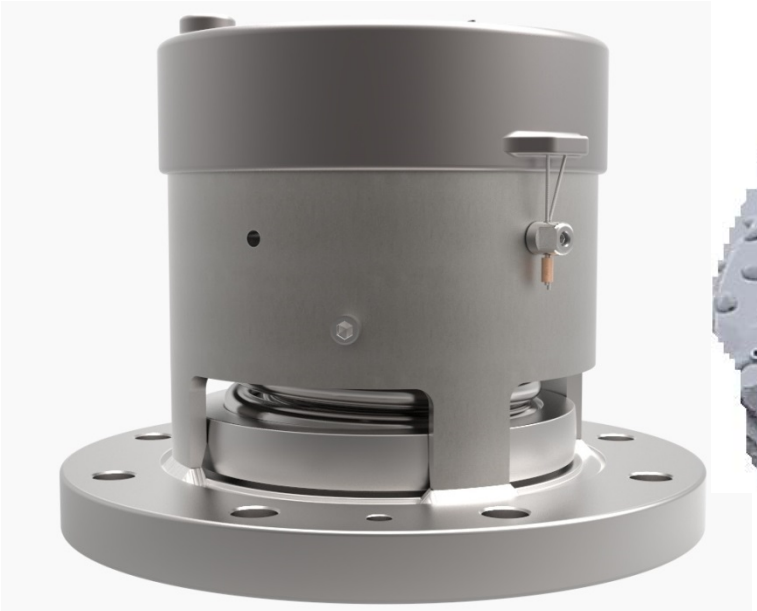

Internal PRD's

Show PRD Clips

KELSO NCNI Crude Car
75 Psi, 30,000 SCFM PRD

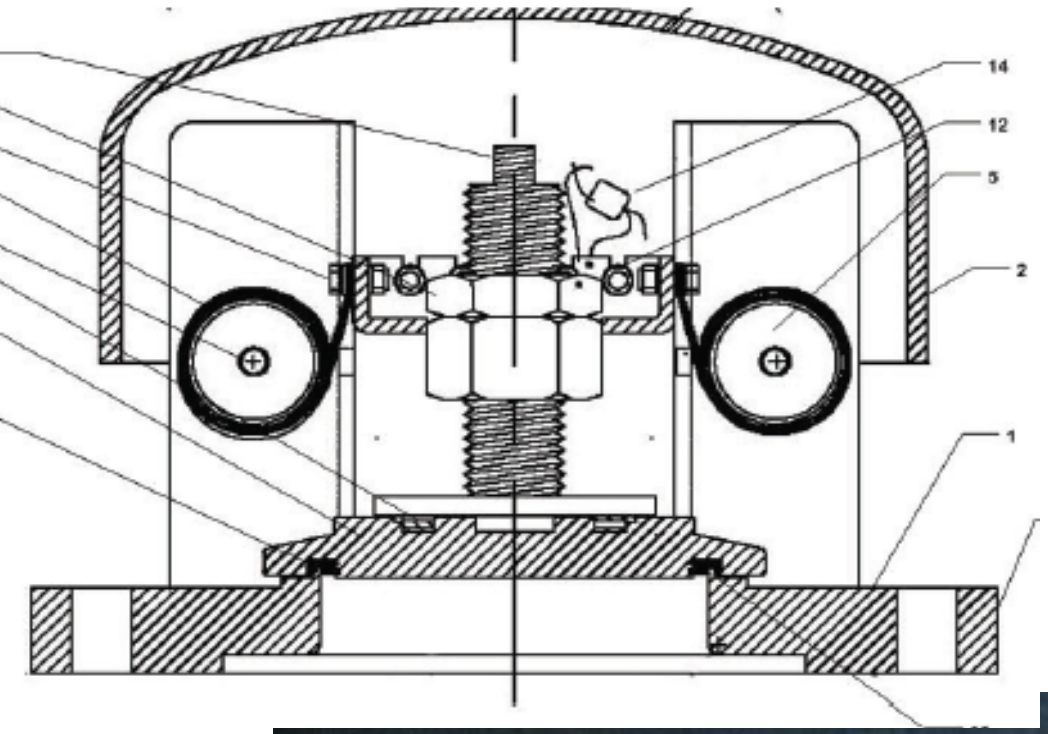

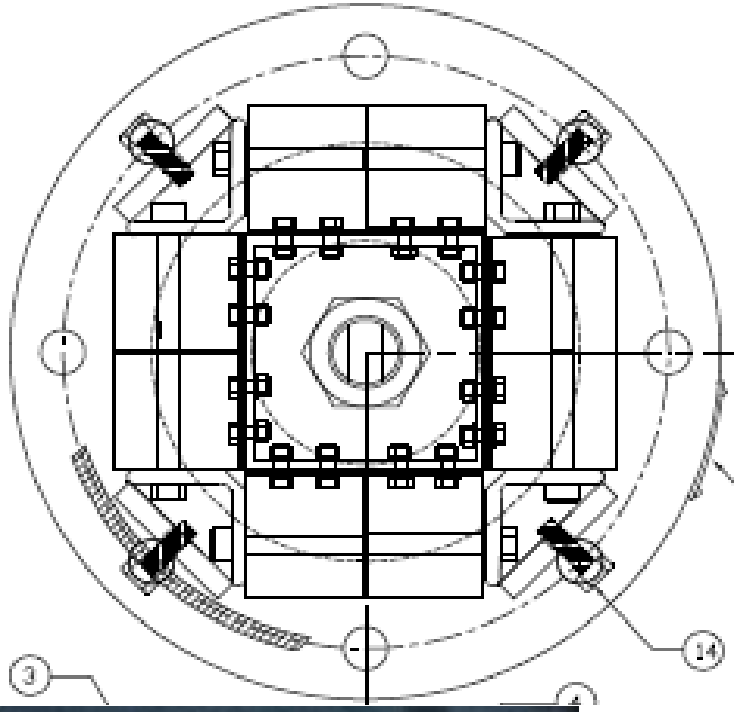

New Requirement for NCNI Crude Cars
75 Psi, 27,000 SCFM PRD

Effective Oct 1, 2013

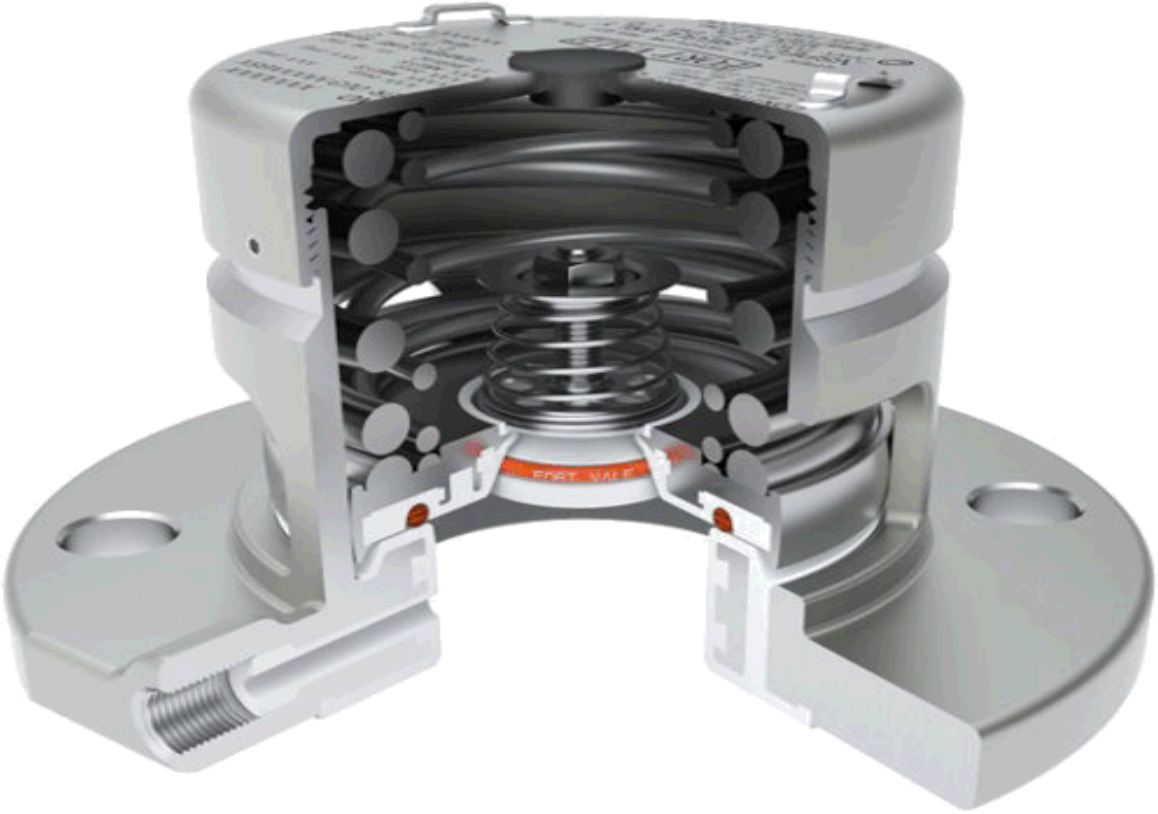

Introducing

Part # 0R4/1075130

AAR # PRD129514

31,676 SCFM at 85psi

33,545 SCFM at 90psi

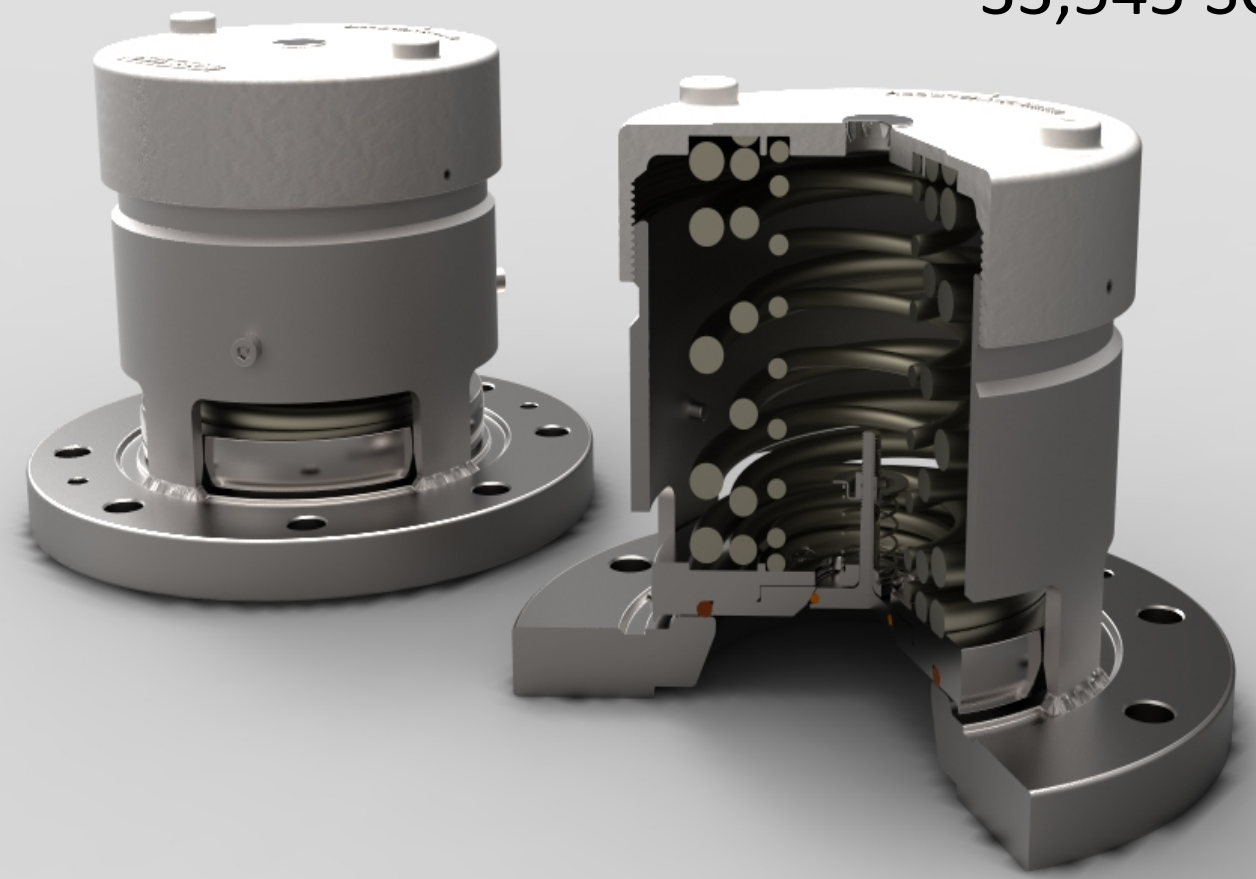

Show Flow Test

Flow Test Results

0r4_high_lift_75psi_run1.mp4 Destroying Lab.mp4

3. Got a Vacuum Relief Valve ??

Typical scene of a car not being vented when unloading and without a Vacuum Relief Valve.

Show Vac. Clip

Outdated Screwed Vacuum Relief Valve

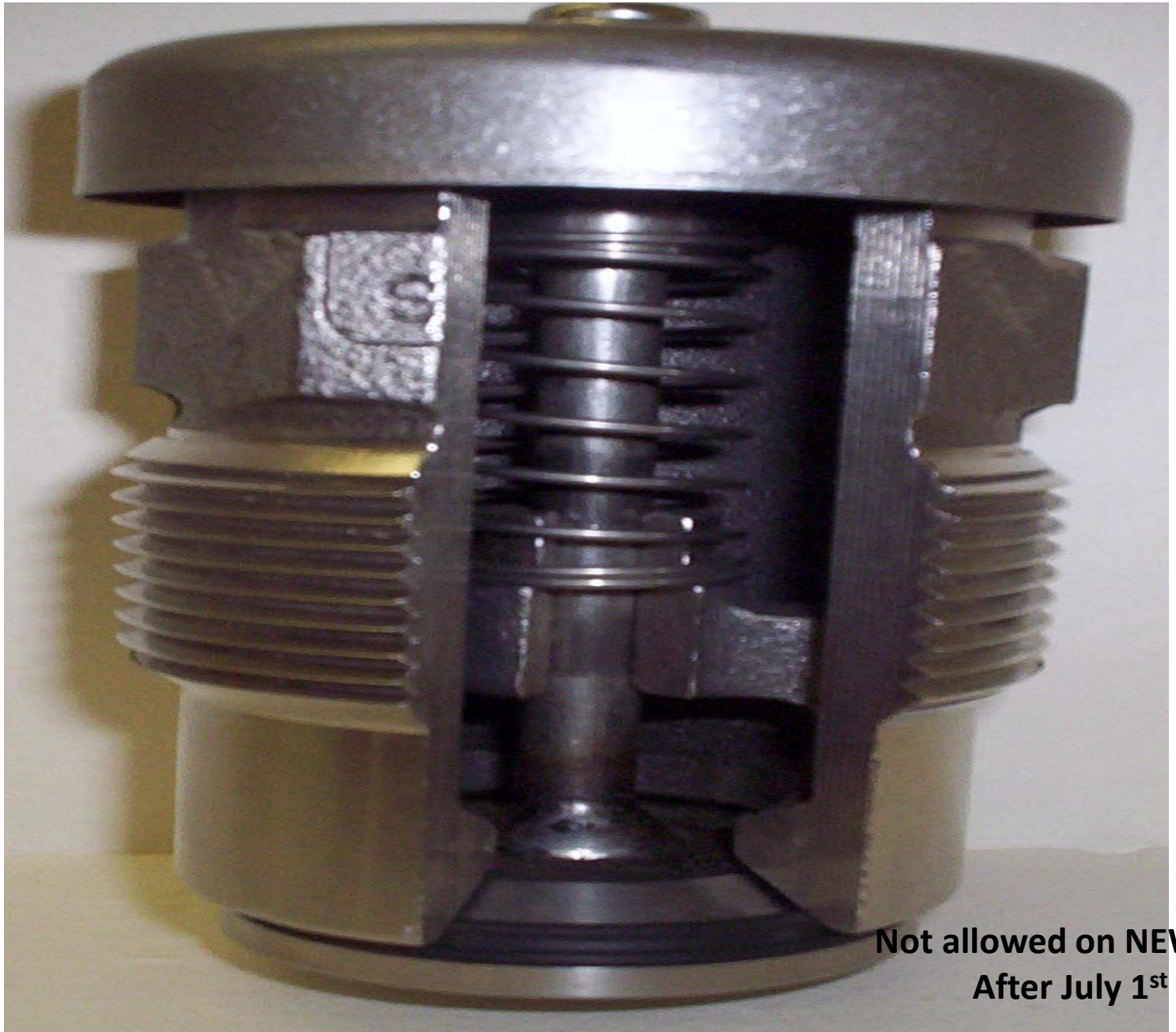

Not allowed on NEW Cars Built After July 1st 2013

Vacuum Relief Valve Markings

Required Flanged Vacuum Relief Valve

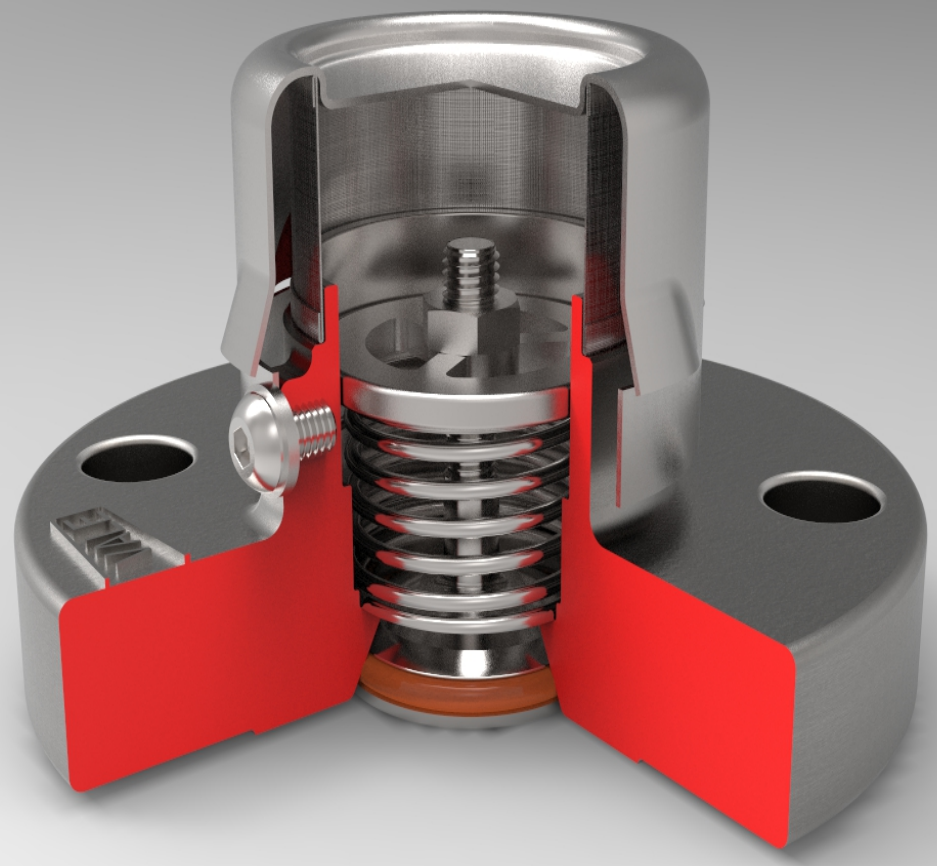

Required on NEW Cars Built
After July 1st 2013

4. Bottom Outlet Valve and Fittings

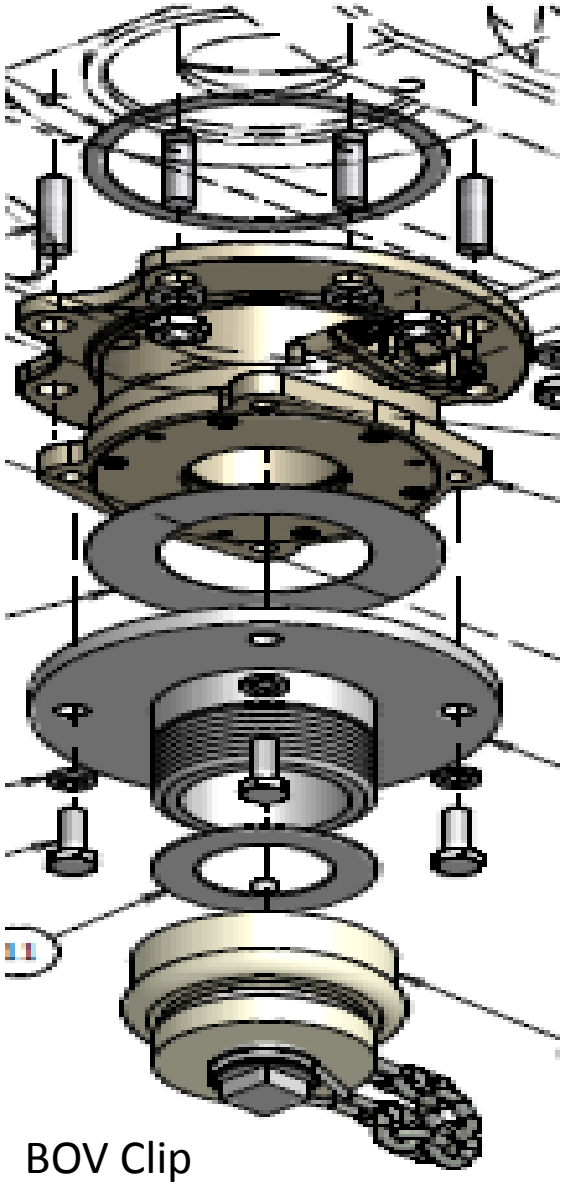

BOV Clip

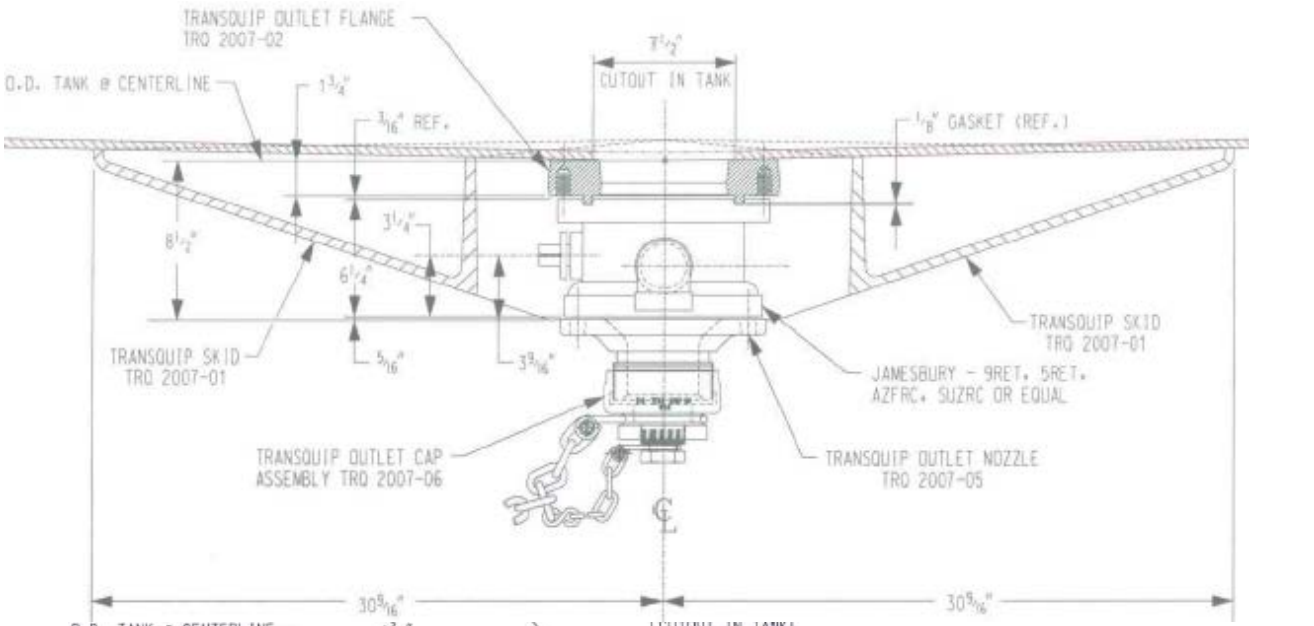

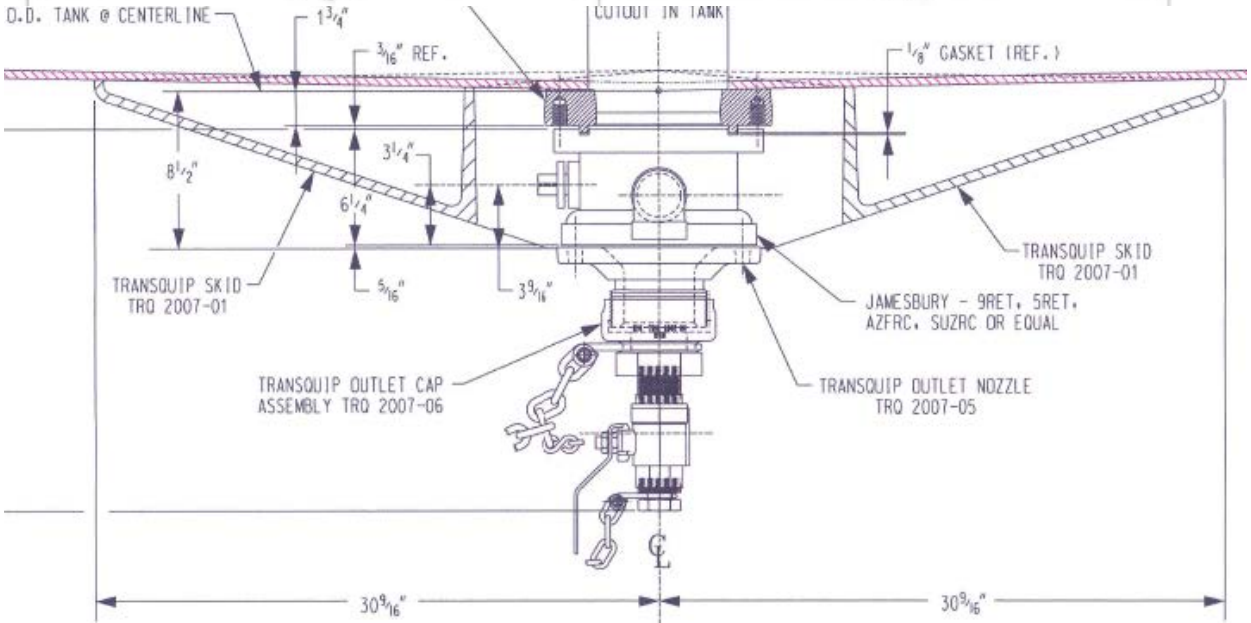

Seat Designs

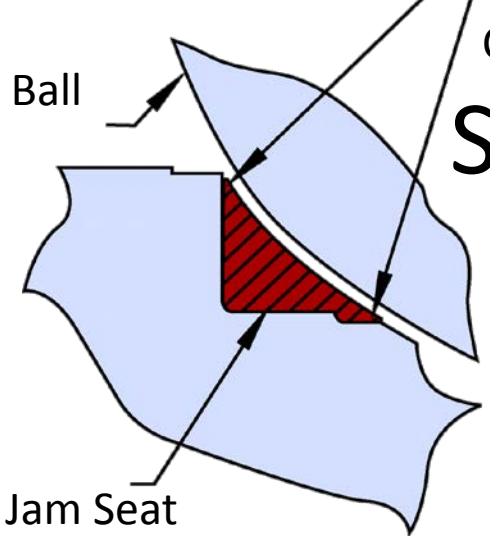

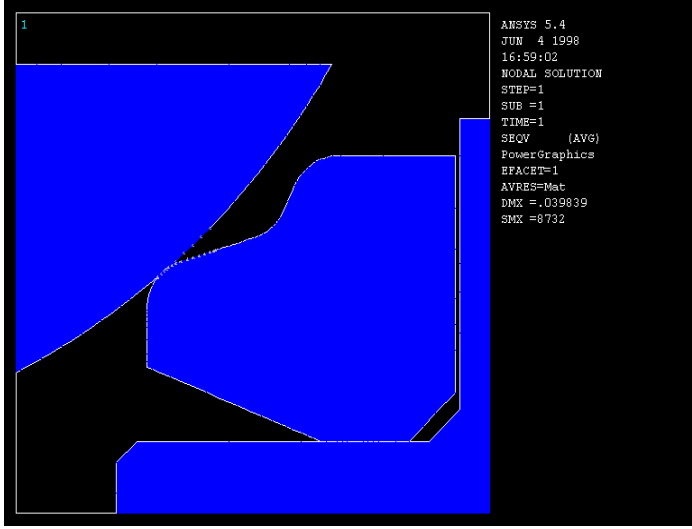

Competitor "U"

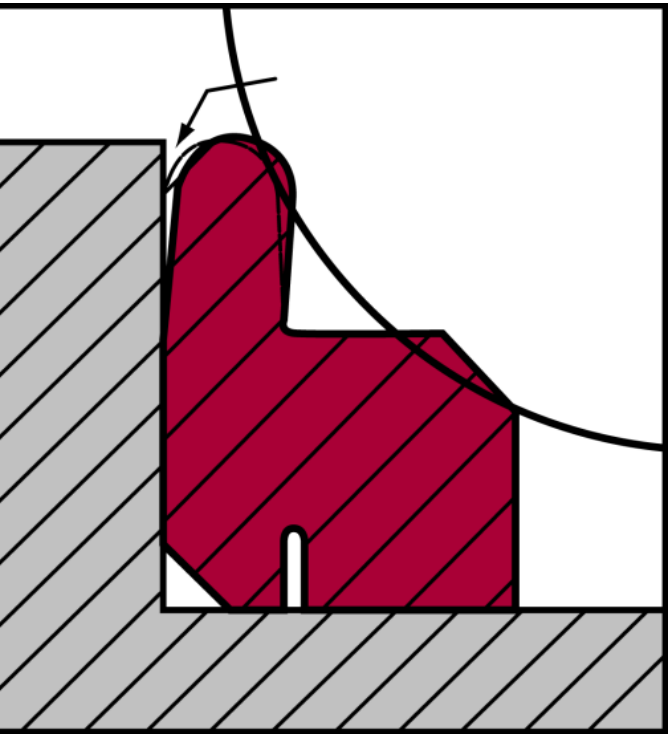

Competitor "M"

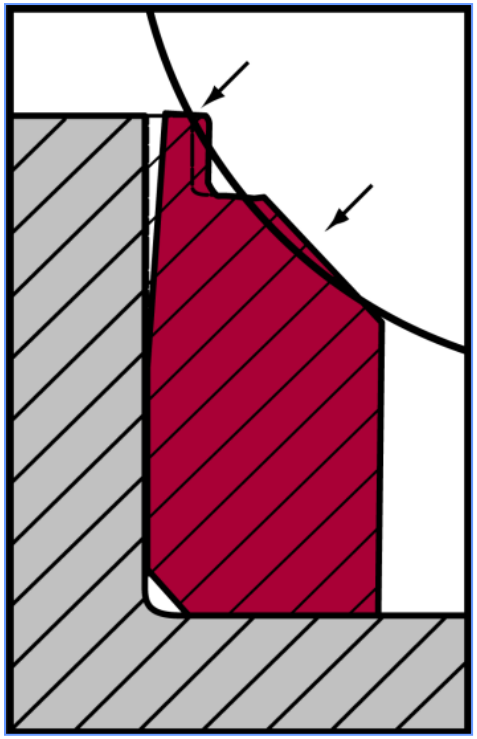

Competitor "A"

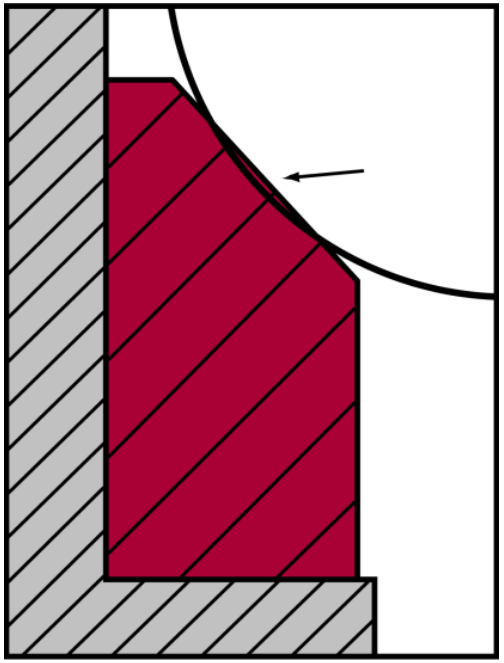

Jamesbury 4” 9RET3-22HB

Jamesbury 4” 9RET4-22HB

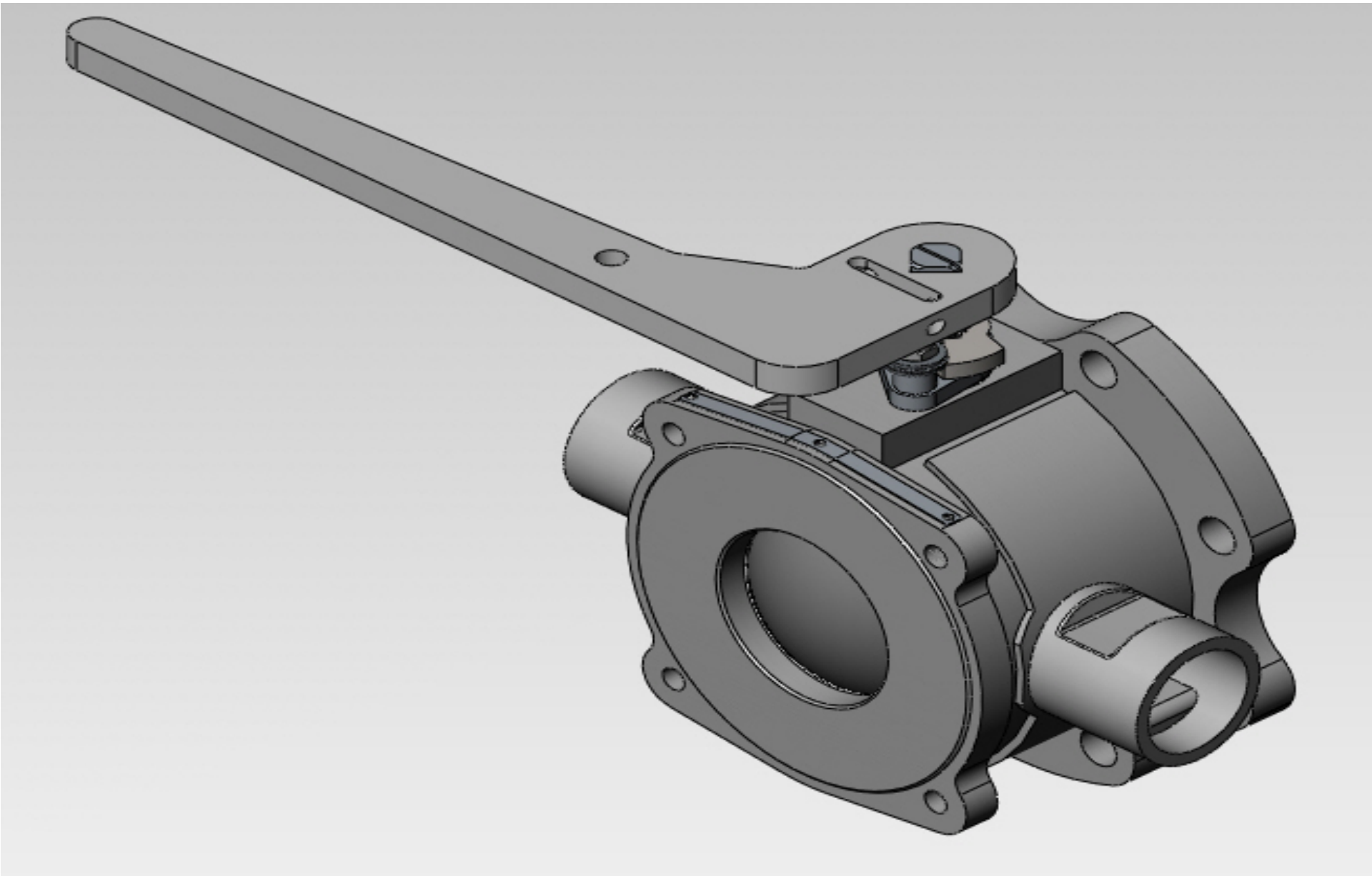

Jamesbury 4” 9RET4-22HB Markings

SERIAL NUMBER - Manufacturing is responsible for creating the serial number which is constructed as follows except for subcontract purchased transportation valves refer to 2.1.3.

Example: **U123210123.1** where:

U	12	3210123	.1
1	2	3	4

1 U stands for USA
2 Year manufactured (last 2 digits)
3 (7) digits Manufacturing Order (MO)
4 Sequential number within total MO quantity

Bottom Outlet Valve and Fittings

Show BOV. Clip

9RET4 Bottom Outlet Valve

Bottom Outlet Valve and Fittings w/ 2” Aux. Valve

Internal 6RIB3 Bottom Outlet Valve

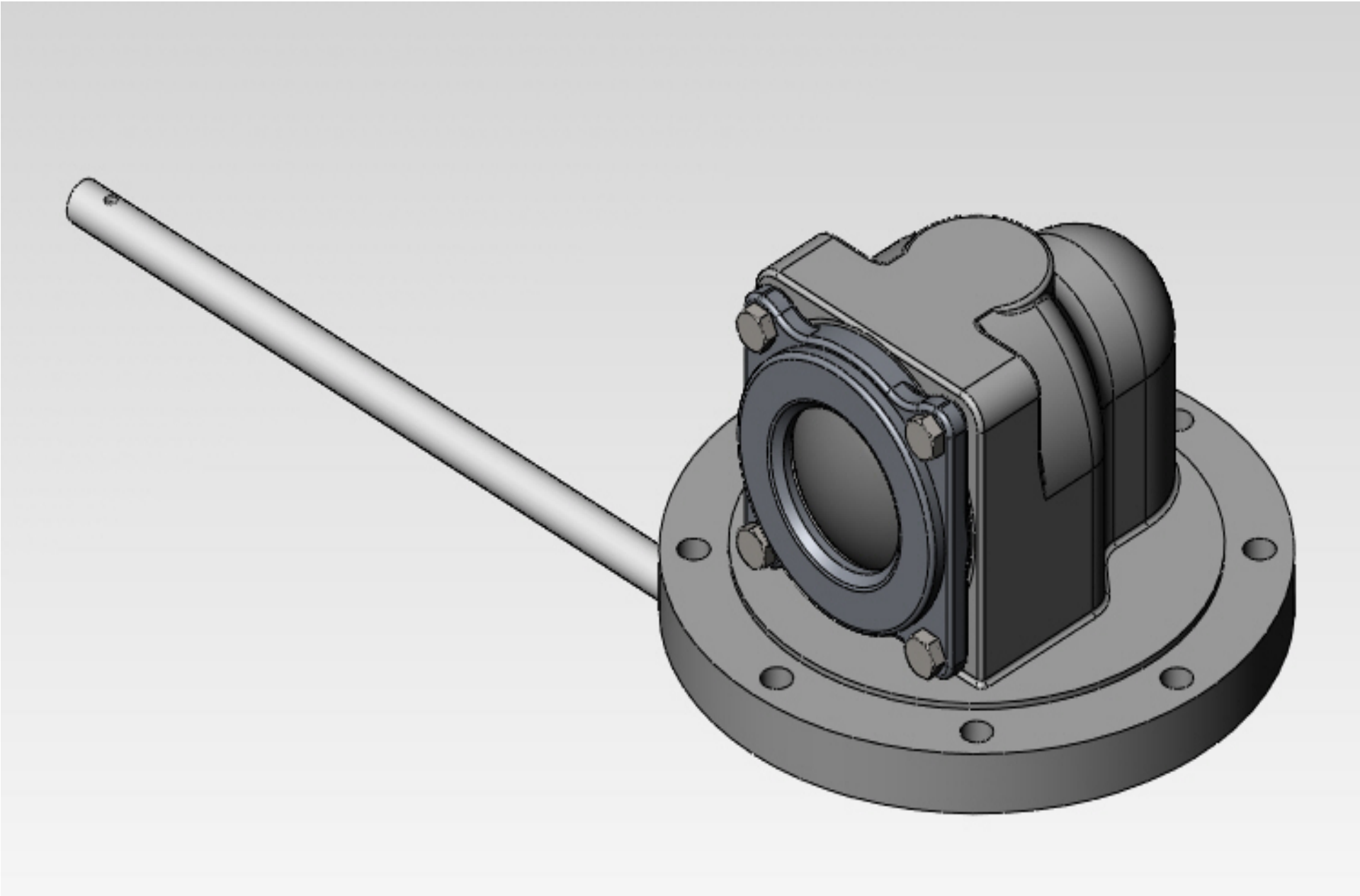

Bottom Outlet Valve Equipment

Bottom Outlet Valve Standard Hardware

Alternate BOV Fitting

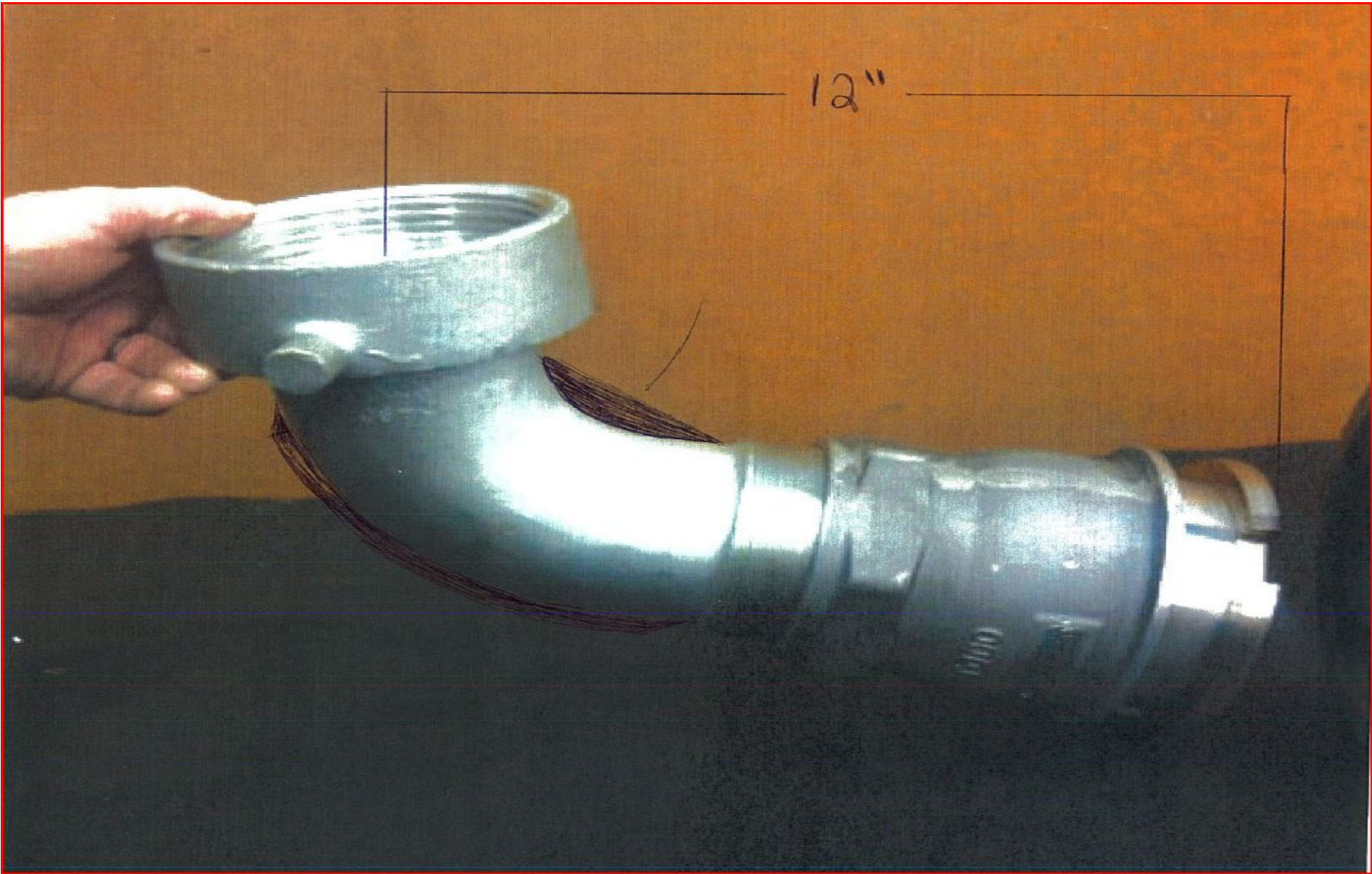

Alternate BOV Fitting

Trans Loading from Truck to Railcar

Trans Unloading through BOV

Open Discussions, Questions

Let’s Hear from you…….