MIDLAND™

PART OF OPW FLUID TRANSFER GROUP

A DOVER™ COMPANY

Pressure Cars

MIDLAND™

Midland Pressure Railcar Products
Reliable Quality and Innovative Design Combine to Provide Peace-of-Mind Safety in the Most Demanding Applications
Angle Valves
Valve Actuators
Pressure Relief Valves
Check Valves
Magnetic Gaging Devices
Needle Valves
Thermocouples
Manway Cover
LIN Aeroters
MIDLAND
7733 Gross Point Road • Skokie, IL 60077 USA • Telephone: +1 847 677 0333 • Fax: +1 847 677 0138 • www.midlandnrfg.net

Current LPG Configuration

Current Chlorine Valve Configuration

MIDLAND™

PART OF OPW FLUID TRANSFER GROUP

A DOVER™ COMPANY

Pressure Relief Valves

Products typically shipped in Pressure cars using internal Pressure Relief Valves.
(a.k.s. PRVs)

- LPG
- Anhydrous Ammonia
- VCM
- Ethylene Oxide
- Co2

MIDLAND

PRESSURE RELIEF VALVES

A-37000-XL SERIES, A-37004-XL SERIES

© 2002 Midland Manufacturing Corp.
All designs subject to change without notice. Installation dimensions and mounting arrangements are for general information. Certified drawings are available upon request.

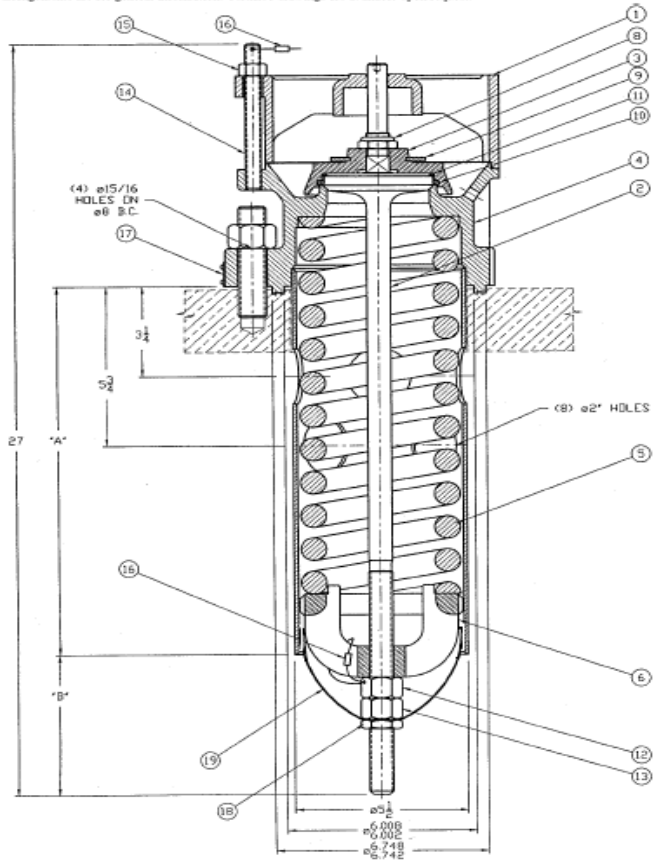

ITEM NO.	QTY.	PART NAME	A-37000-XL SERIES		A-37004-XL SERIES	
			MATERIAL	PART NO.	MATERIAL	PART NO.
1	1	TOP GUIDE	STEEL W/SS INSERT	34-1-XS	STAINLESS STEEL	34-1-SS
2	1	STEM	STAINLESS	31-2-SS	STAINLESS STEEL	31-2-SS
3	1	RETAINER	STEEL, PLATED[1][6]	37-3-CS	STAINLESS STEEL	37-3-SS
4	1	BODY & GUIDE ASM	STEEL [6]	34-411-CS	STAINLESS STEEL	34-411-SS
5	1	SPRING	ALLOY STEEL, PLATED[3][6]	SEE TABLE	STAINLESS STEEL	SEE TABLE
6	1	FOLLOWER	STEEL, PLATED	34-6-CS	STAINLESS STEEL	34-6-SS
7						
8	1	TOP LOCK NUT	STEEL, PLATED [1]	23-8-CS	STAINLESS STEEL	23-8-SS
9	1	WASHER	NEOPRENE	23-9-NE	NEOPRENE	23-9-NE
10	1	SEAT "O" RING	BUNA-N[2]	31-10-BN	BUNA-N [2]	31-10-BN
11	1	STEM "O" RING	BUNA-N[2]	31-11-BN	BUNA-N [2]	31-11-BN
12	1	ADJUSTMENT NUT	STEEL, PLATED [1]	23-12-CS	STAINLESS STEEL	23-12-SS
13	1	LOCK NUT	STEEL, PLATED [1]	23-13-CS	STAINLESS STEEL	23-13-SS
14						
15	4	NUT	STEEL	23-15-CS	STAINLESS STEEL	23-15-SS
16	2	WIRE SEAL	SS/LEAD	23-7-PB	SS/LEAD [2]	23-7-PB
17	1	NAMEPLATE	STAINLESS	SEE TABLE	STAINLESS STEEL	SEE TABLE
18	1	COVER LOCK NUT	STEEL, PLATED	34-67-CS	STAINLESS STEEL	23-53-SS
19	1	COVER	STAINLESS	346-66-SS	STAINLESS	346-66-SS

NOTES: 1 Standard plating is zinc or cadmium. 2 Alternate materials available. 3 Standard plating is zinc w/dichromate. For aluminum coated spring, specify AS/AL. For stainless steel spring, specify SS. 4 Not sold separately. 5 Consult factory. 6 For stainless retainer, stainless body seat and aluminum coated spring, add suffix -XS to valve part number after -XL.

PRESSURE SETTING (PSIG)	FLOW RATE (SCFM-AIR)	NAMEPLATE PART NO.	A-37000-XL SERIES		A-37004-XL SERIES		DIM "A"	DIM "B"
			VALVE PART NO.	SPRING PART NO.	VALVE PART NO.	SPRING PART NO.		
225	[5]	37-25-SS	A-37225-XL	[5]	A-37229-XL	[5]	-	-
247.5	[5]	37-247-SS	A-37247-XL	34-255-AS	A-37251-XL	[5]	10.87	7.44
255	[5]	37-272-SS	A-37255-XL	34-255-AS	A-37259-XL	[5]	10.87	7.44
280.5	38,483	37-282-SS	A-37280-XL	34-5-AS	A-37284-XL	[5]	13.25	5.06
300	[5]	37-29-SS	A-37300-XL	[5]	A-37304-XL	[5]	-	-
330	[5]	37-30-SS	A-37330-XL	[5]	A-37334-XL	[5]	-	-

THESE VALVES REPLACE A-3400-XL AND A-3404-XL SERIES VALVES.

NET FLOW AREA: 7.85 SQUARE INCHES

WEIGHT OF VALVE: 70 LBS.

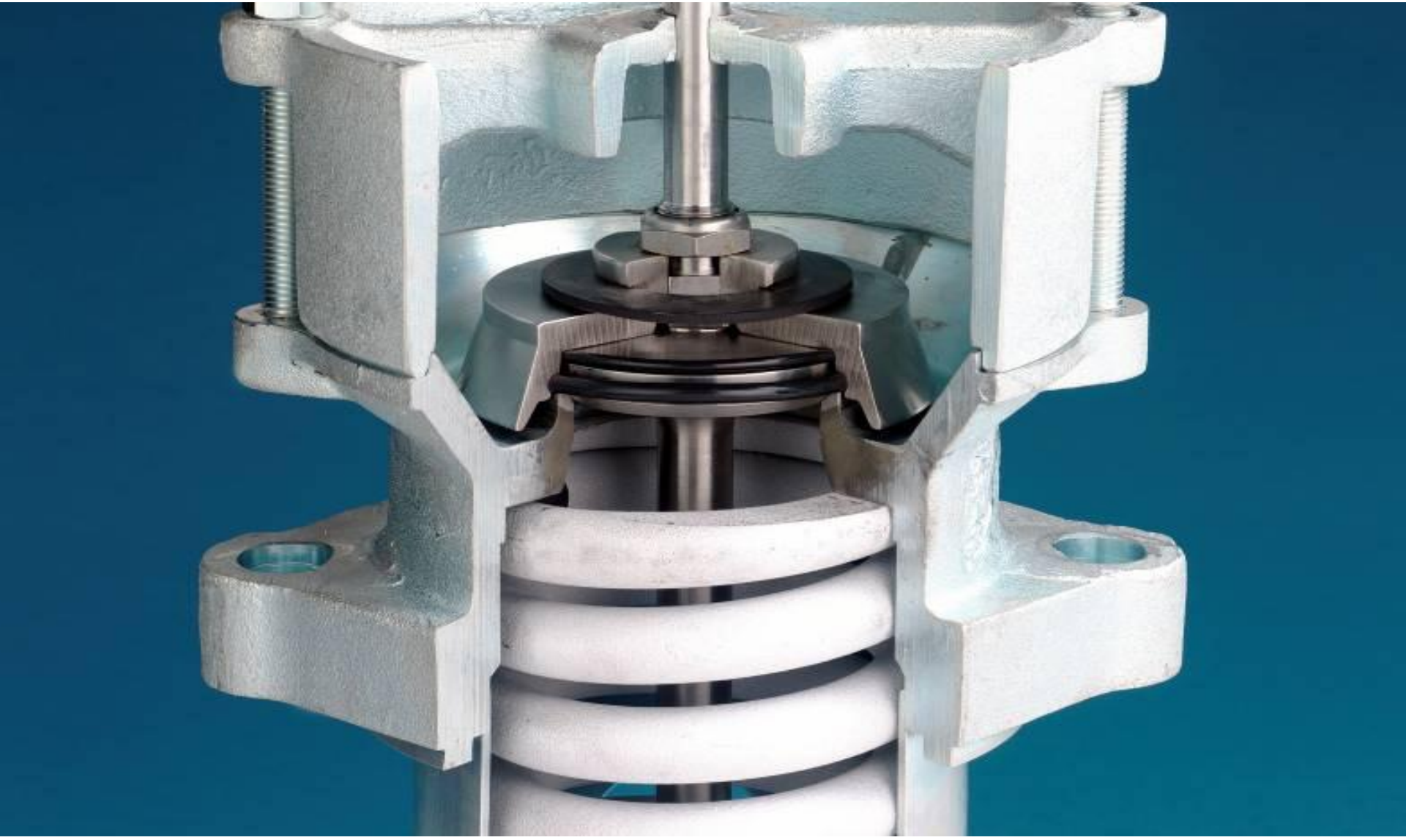

PRV Critical Sealing Surface

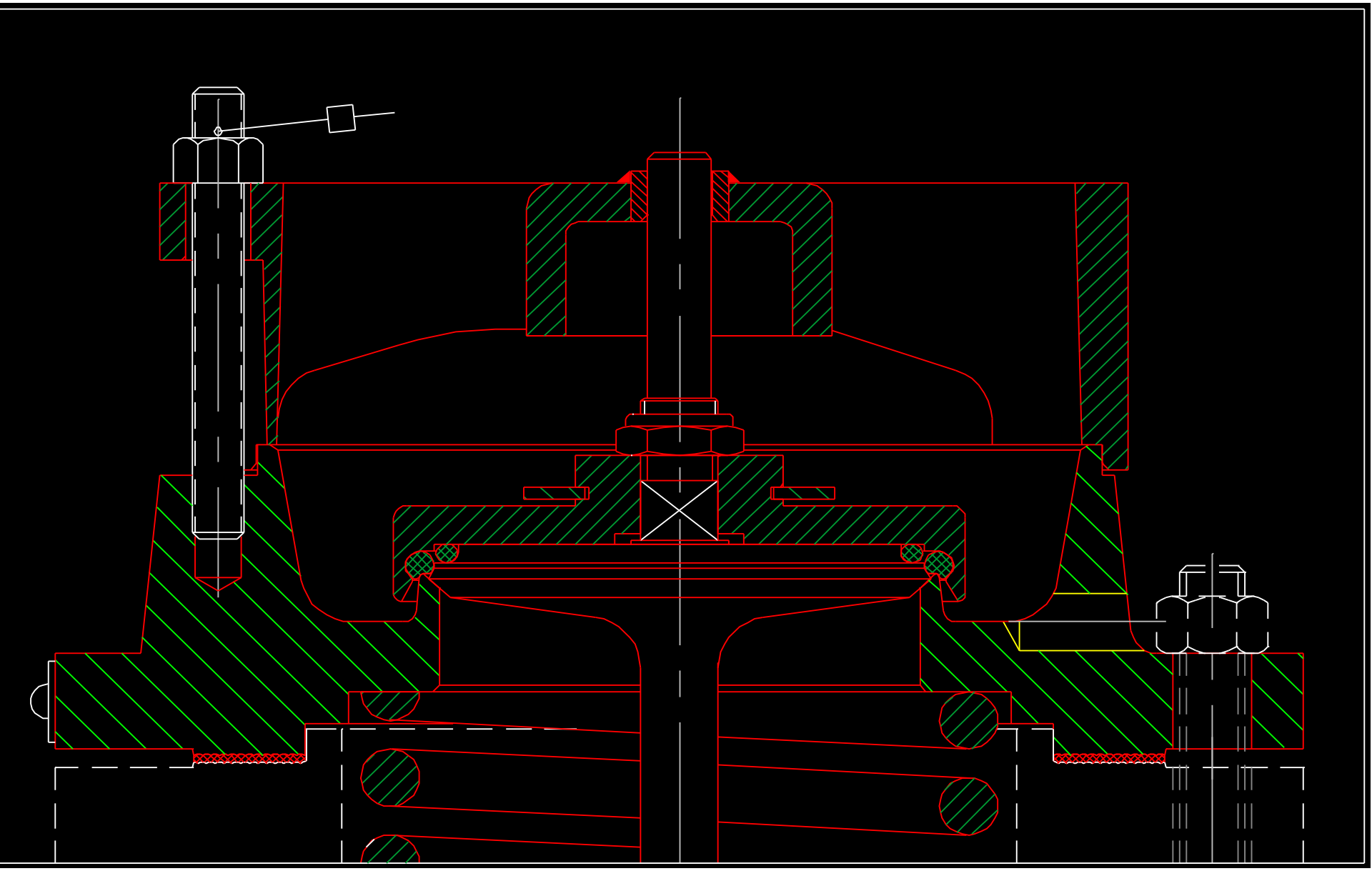

PRV Critical Sealing Surface

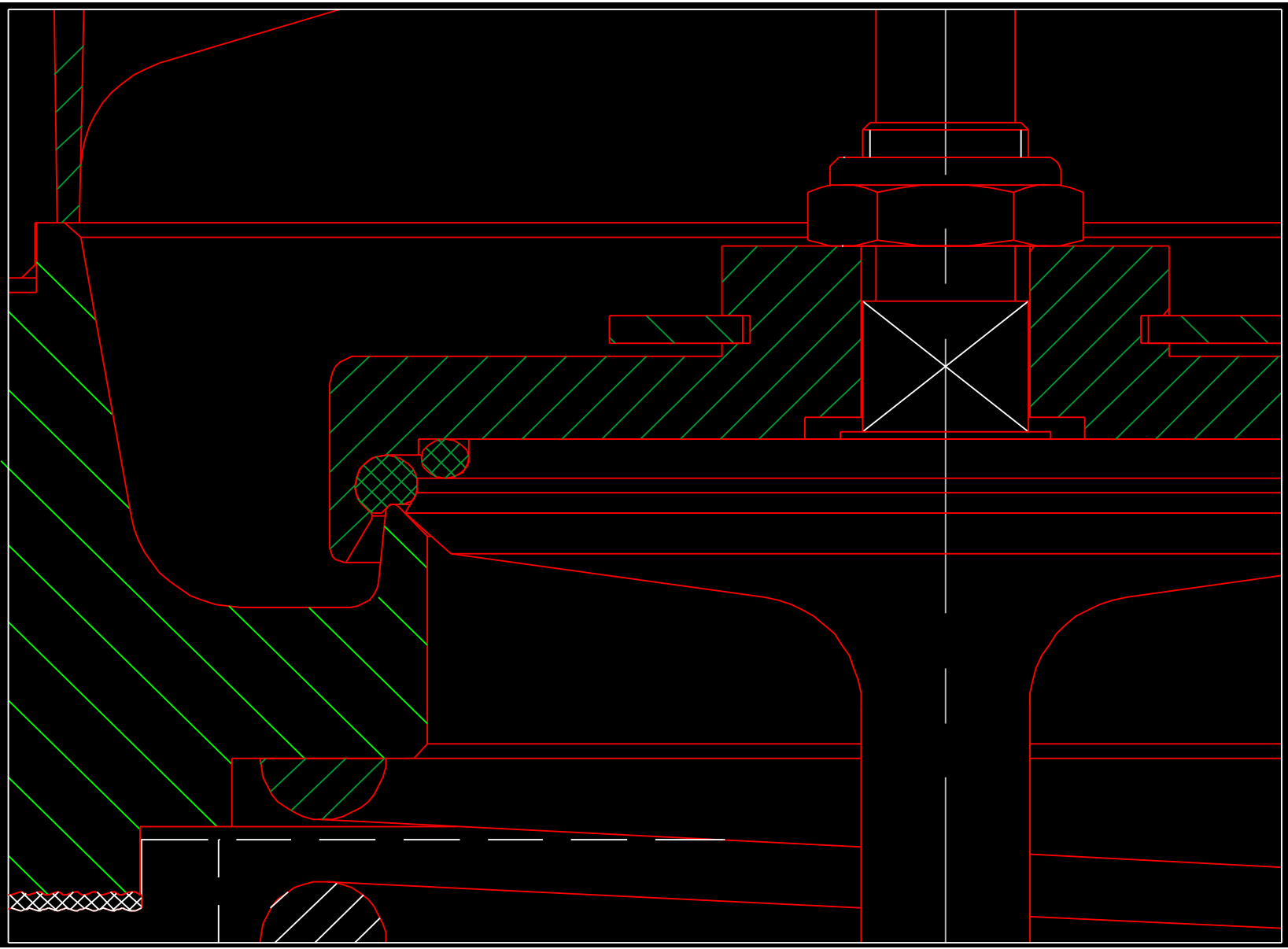

PRV Critical Sealing Surface

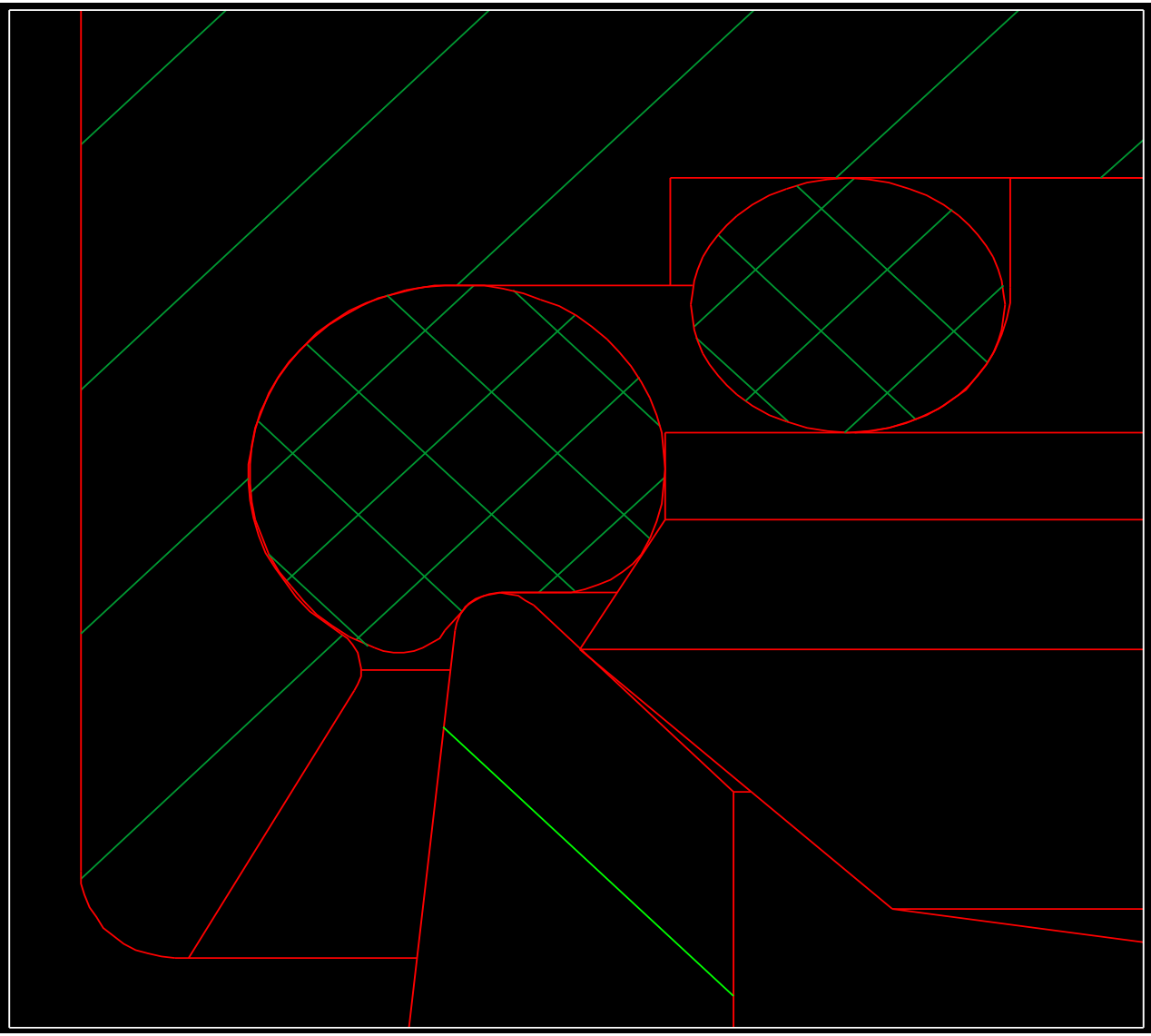

Products typically shipped in Pressure cars using external Pressure Relief Valves.
(a.k.a. PRVs)

- Chlorine
- Ethylene Oxide
- Co2
- AHF

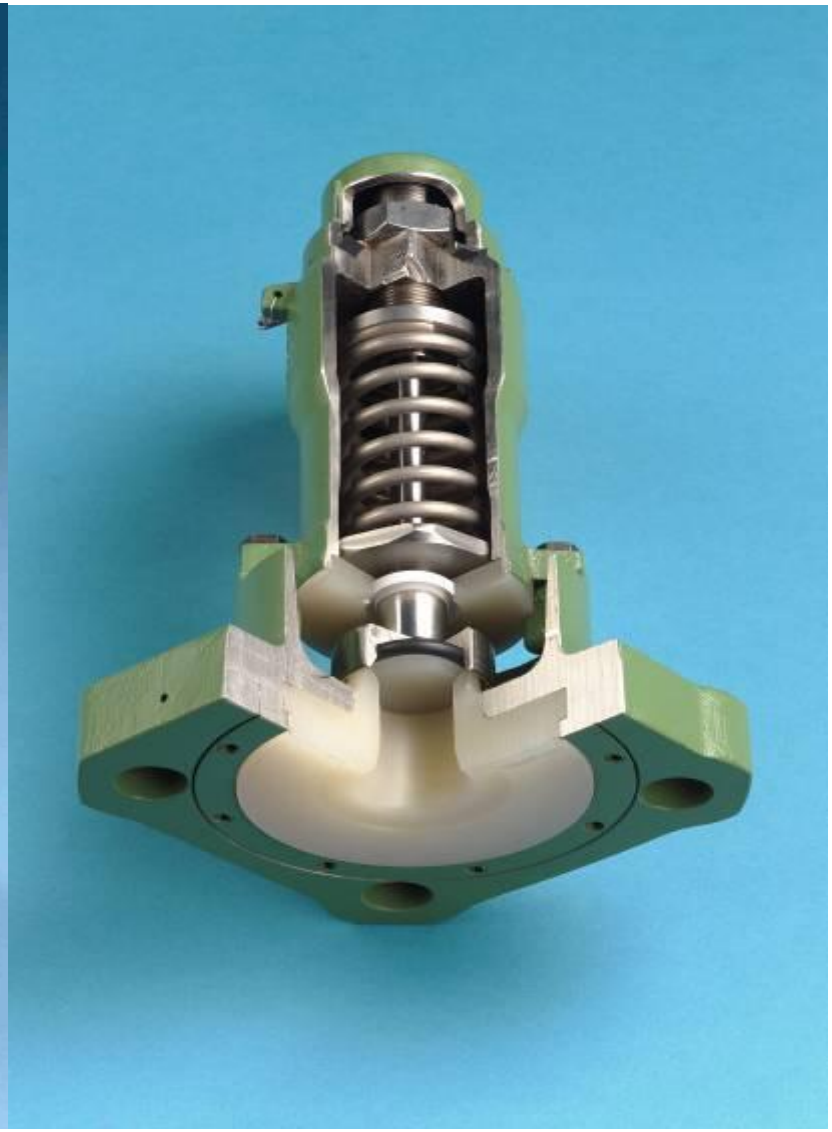

PRESSURE RELIEF VALVES

PRESSURE RELIEF VALVES

TOP STYLE

A-17150-T thru A-17454-T

© 2002 Midland Manufacturing Corp.
All designs subject to change without notice. Installation dimensions and mounting arrangements are for general information. Certified drawings are available upon request.

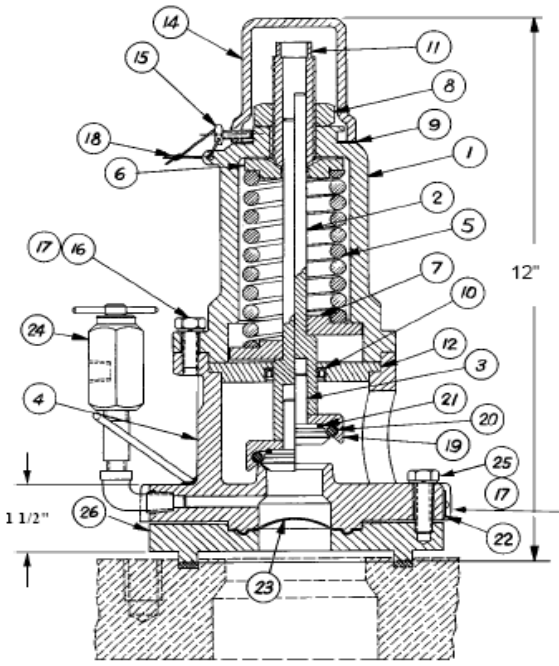

NOTES:

1 SIZE OF FLANGE HOLES: Four 7/8" dia. holes are standard. For any other use suffix "J" and specify.

2 BOLT CIRCLE: 6 1/4" dia. is standard. For 6 1/2" dia. use suffix "B". For any other, use suffix "C".

3 MOUNTING: The AAR standard tongue with an O.D. of 4.745"±.003" and an I.D. of 4.005"±.003" is standard. For a 4.995" x 4.255" tongue use suffix "M". For a 2.245" x 1.505 mounting use suffix "R". For flat face use suffix "P".

4 Alternate material available

ITEM NO.	QTY.	PART NAME	A-17150-T THRU A-17450-T STAINLESS TRIM		A-17154-T THRU A-17454-T STAINLESS STEEL	
			MATERIAL	PART NO.	MATERIAL	PART NO.
1	1	TOP GUIDE	STEEL	15-1-C5	STAINLESS	15-1-SS
2	1	STEM	STAINLESS	17-2-SS	STAINLESS	17-2-SS
3	1	PLUG	STAINLESS	17-3-SS	STAINLESS	17-3-SS
4	1	BODY	STEEL	15-44-C5	STAINLESS	15-44-MO
5	1	SPRING	STAINLESS	SEE TABLE	STAINLESS	SEE TABLE
6	1	FOLLOWER	STEEL	14-6-C5	STAINLESS	14-6-SS
7	1	GUIDE	STAINLESS	15-7-SS	STAINLESS	15-7-SS
8	1	TOP NUT	STEEL	15-8-C5	STEEL[4]	15-8-C5
9	1	TOP GASKET	BUNA-N[4]	15-9-BN	BUNA-N[4]	15-9-BN
10	1	SHAFT SEAL	TEFLON	17-10-TF	TEFLON	17-10-TF
11	1	ADJUSTMENT SCREW	STAINLESS	15-11-SS	STAINLESS	15-11-SS
12	1	SEAL RETAINER	STEEL	17-12-C5	STAINLESS	17-12-SS
13						
14	1	CAP	STAINLESS	15-14-SS	STAINLESS	15-14-SS
15	1	CAP SCREW	STEEL	15-15-C5	STEEL	15-15-C5
16	3	BOLT	STEEL	15-16-C5	STAINLESS	15-16-SS
17	5	LOCKWASHER	STEEL	15-17-C5	STAINLESS	15-17-SS
18	1	WIRE SEAL	SS/LEAD	15-18-PB	SS/LEAD	15-18-PB
19	1	RETAINER	STAINLESS	17-19-SS	STAINLESS	17-19-SS
20	1	SEAT "O" RING	BUNA-N[4]	10-10-BN	BUNA-N[4]	10-10-BN
21	1	PLUG "O" RING	BUNA-N[4]	10-11-BN	BUNA-N[4]	10-11-BN
22	1	NAMEPLATE	STAINLESS	SEE TABLE	STAINLESS	SEE TABLE
23	1	RUPTURE DISC	STAINLESS[4]	AS SPECIFIED	STAINLESS[4]	AS SPECIFIED
24	1	NEEDLE VALVE NIPPLE & ELBOW	STAINLESS	A-253-BN[4] 421-SS	STAINLESS	A-253-BN[4] 421-SS
25	2	BOLTS	STEEL	17-31-SS	STAINLESS	17-31-SS
26	1	RUPTURE DISC FLANGE	STEEL	17-34-C5	STAINLESS	17-34-SS

PRESSURE SETTING (PSIG)	FLOW RATE (SCFM-AIR)	SPRING P/N	A-17150-T thru A-17450-T STAINLESS TRIM		A-17154-T thru A-17454-T STAINLESS STEEL	
			VALVE P/N	NAMEPLATE P/N	VALVE P/N	NAMEPLATE P/N
150	1960	15-150-SS	A-17150-T	17-25-SS	A-17154-T	17-29-SS
165	2827	15-165-SS	A-17165-T	17-44-SS	A-17169-T	17-48-SS
225	3250	15-225-SS	A-17225-T	17-26-SS	A-17229-T	17-30-SS
247.5	3368	15-300-SS	A-17247-T	17-45-SS	A-17251-T	17-49-SS
255	3490	15-300-SS	A-17255-T	17-53-SS	A-17259-T	17-54-SS
280.5	3782	15-300-SS	A-17280-T	17-46-SS	A-17284-T	17-51-SS
300	4020	15-300-SS	A-17300-T	17-34-SS	A-17304-T	17-35-SS
330	3935	15-375-SS	A-17330-T	17-47-SS	A-17334-T	17-52-SS
375	3646	15-375-SS	A-17375-T	17-375-SS	A-17379-T	17-37-SS
450	4198	15-450-SS	A-17450-T	17-40-SS	A-17454-T	17-41-SS

NET FLOW AREA: .994 SQUARE INCHES
WEIGHT OF VALVE: 25 LBS.

Updated
A14377-C-ML-VL

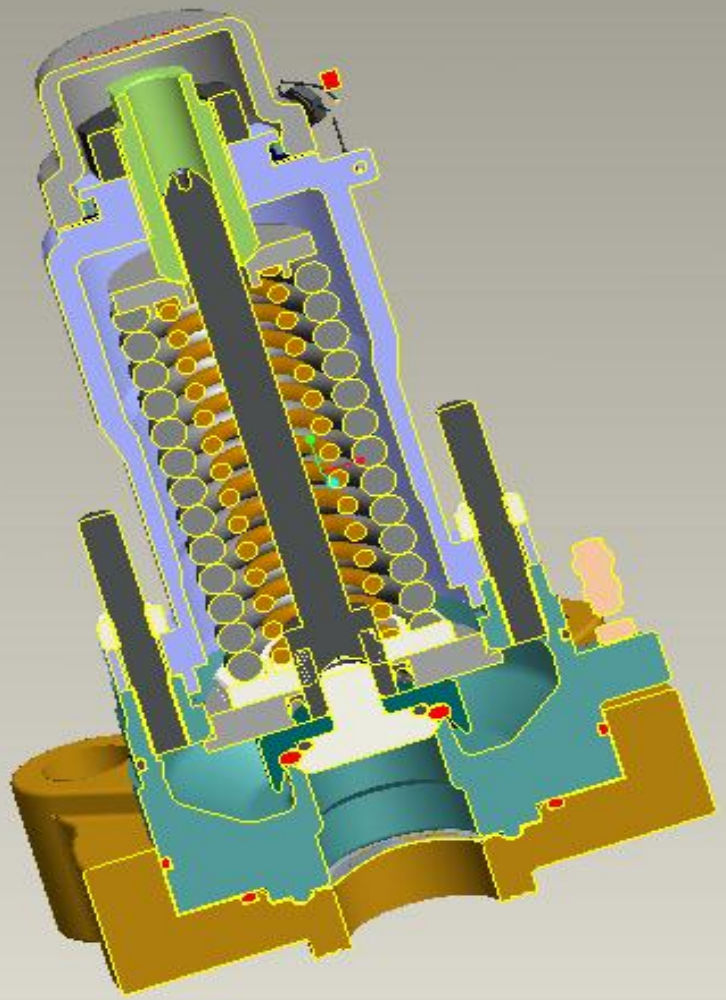

Clipping State:D

Updated

A14377-C-ML-VL

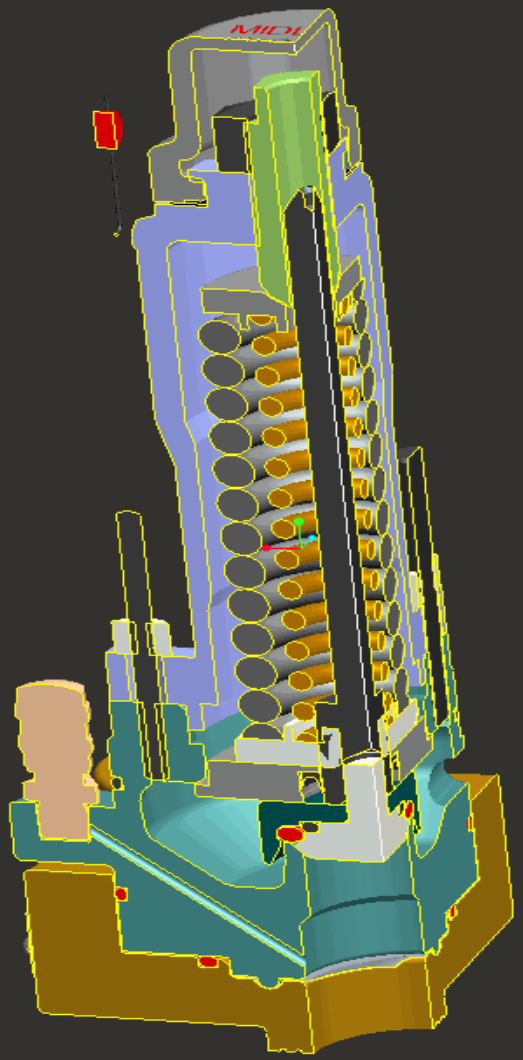

Clipping State:A

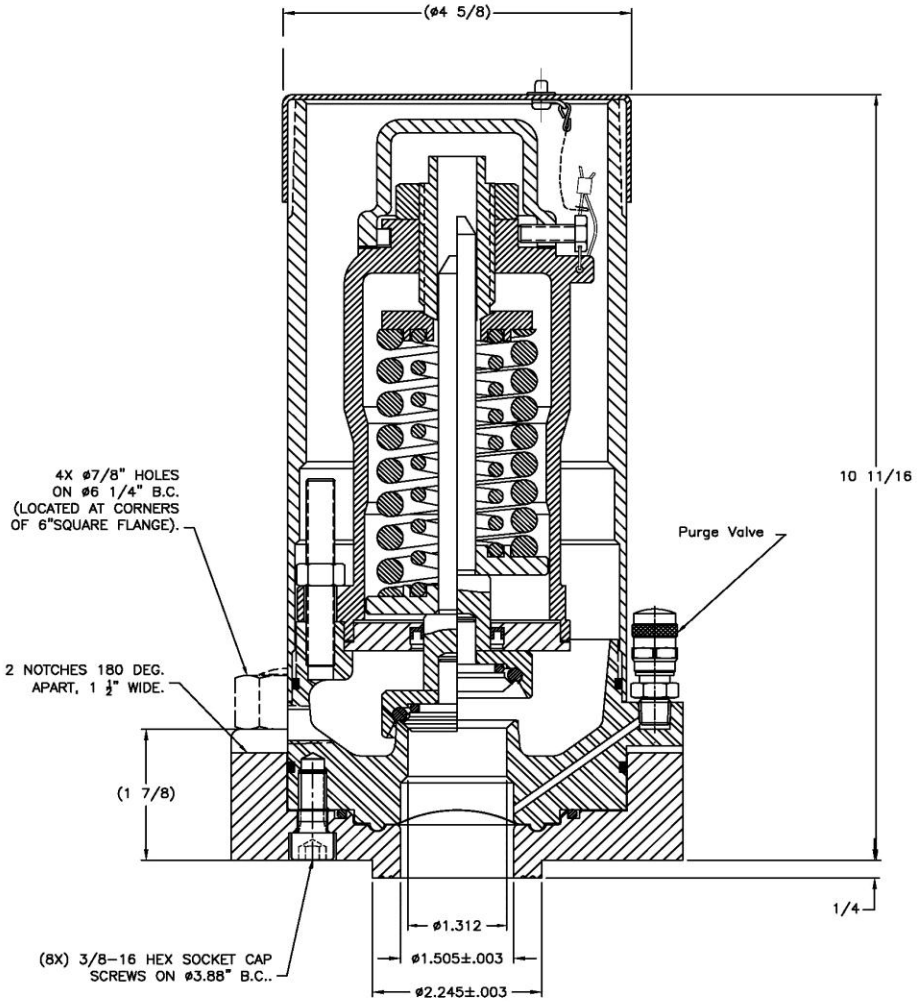

Midland Mfg. Property

Updated
A14377-C-ML-VL

FOR CHLORINE SERVICE

MIDLAND MANUFACTURING CORP.
SKOKIE, IL, U.S.A.

TOP STYLE SAFETY VALVE,
O–RING SEAL WITH RUPTURE DISC

MATERIAL: TBD	TOLERANCES UNLESS SPECIFIED: 2 PLACE DECIMAL ± .015, 3 PLACE DECIMAL ± .005, ANGULAR ± 1°, FRACTIONS ± 1/64, CHAMFERS AND WELD PREP ±5°
REMOVE ALL BURRS. BREAK ALL EDGES & CORNERS.	FINISH (Ra) : √ = 125

SCALE: 3/4	DRAWN: MN	DATE: 9/27/07	APPROVED: MN

CAD FILE NO.	SIZE	DWG NO.	REV
8464	B	A–1402–C SERIES	

LTR	REVISIONS	DRN	DATE	APP

MIDLAND™

PART OF OPW FLUID TRANSFER GROUP

A DOVER™ COMPANY

Angle Valves

Midland model A-720

TOP TRANSFER VALVES

A-720 and A-724

2" ANGLE VALVE

© 2002 Midland Manufacturing Corp.
All designs subject to change without notice. Installation dimensions and mounting arrangements are for general information. Certified drawings are available upon request.

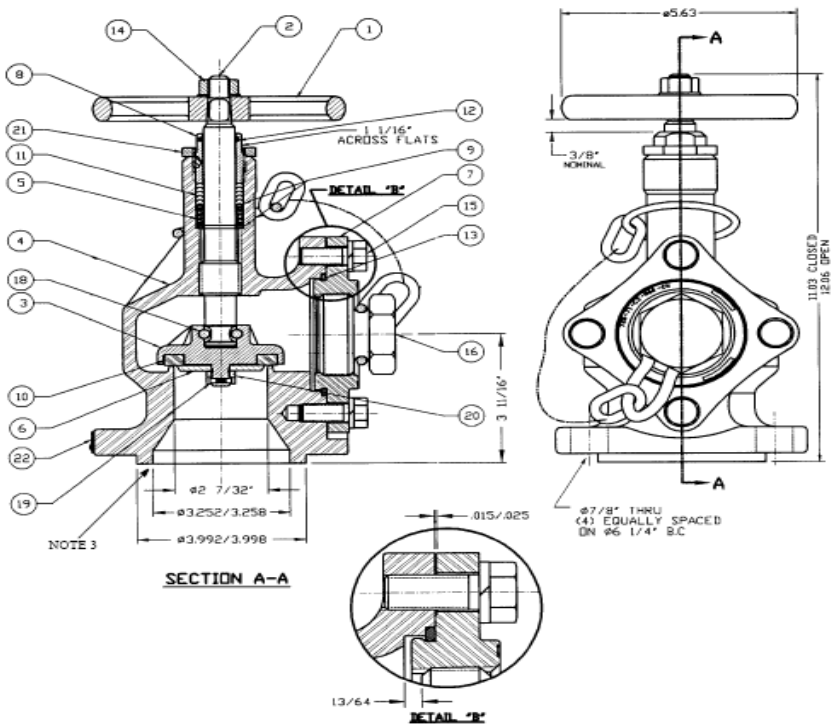

ITEM NO.	QTY	PART NAME		A-720 STAINLESS TRIM		A-724 STAINLESS	
				MATERIAL	PART NO.	MATERIAL	PART NO.
1	1	HANDWHEEL[2]		ALUMINUM(1)	720-1-AL	ALUMINUM[1]	720-1-AL
2	1	STEM		STAINLESS	720-2-SS	STAINLESS	720-2-SS
3	1	GASKET RETAINER[4]		STEEL	720-3-CS	STAINLESS	720-3-SS
4	1	BODY		STEEL	720-4-CS	STAINLESS	724-4-SS
5	1	SPRING		STAINLESS	720-5-SS	STAINLESS	720-5-SS
6	1	RETAINER COVER		STEEL	720-6-CS	STAINLESS	720-6-SS
7	1	OUTLET FLANGE		STEEL,PLATED	720-71-CS	NITRONIC 60, PLATED[5]	720-71-N60
8	1	PACKING SCREW W/IN-SERT		STEEL,PLATED	720-8-CS	STAINLESS	720-8-N60
9	1	PACKING WASHER	TOP	STAINLESS	720-93-SS	STAINLESS	720-93-SS
	1		BOTTOM	STAINLESS	720-91-SS		720-91-SS
10	1	SEAT SEAL		TEFLON	720-10-TF	TEFLON	720-10-TF
11	5	PACKING RING		TEFLON	720-11-TF	TEFLON	720-11-TF
12	1	STEM SEAL		BUNA-N(1)	720-12-BN	BUNA-N(1)	720-12-BN
13	1	O-RING OUTLET		BUNA-N(1)	720-131-BN	BUNA-N(1)	720-131-BN
14A	1	NUT		STAINLESS	720-14-SS	STAINLESS	720-14-SS
14B	1	WASHER		STEEL, PLATED	308-12-CS	STEEL, PLATED	308-12-CS
15A	4	BOLT		STAINLESS	724-15-SS	STAINLESS	724-15-SS
15B	4	LOCKWASHER		STAINLESS	724-152-SS	STAINLESS	724-154-SS
16	1	OUTLET PLUG & CHAIN[1]		STEEL,PLATED	720-16-CS	STAINLESS	720-16-SS
18A	1 SET	STEM RETAINER		STAINLESS	720-18-SS	STAINLESS	720-18-SS
18B	2	NUT		STAINLESS	720-181-SS	STAINLESS	720-181-SS
19	1	PIN		STAINLESS	720-19-SS	STAINLESS	720-19-SS
20	1	RETAINER NUT		STEEL,PLATED	720-20-CS	STAINLESS	724-20-SS
21	1	PACKING LOCK NUT		STEEL,PLATED	720-21-CS	STAINLESS	724-21-SS
22	1	NAMEPLATE		STAINLESS	720-22-SS	STAINLESS	724-22-SS

NOTE: 1 Alternate material available. **2** For optional 7 1/2" dia. handwheel, order part number 720-101-AL. **3** For optional mounting gasket order part number 720-23-AB. **4.** For retainer assembly consisting of items 3,6,10, 19 & 20, order part number 720-301-CS or 724-301-SS **5.** If no plating is desired, specify.

1” Chlorine Angle Valve

Check valves

Check Valve Application View

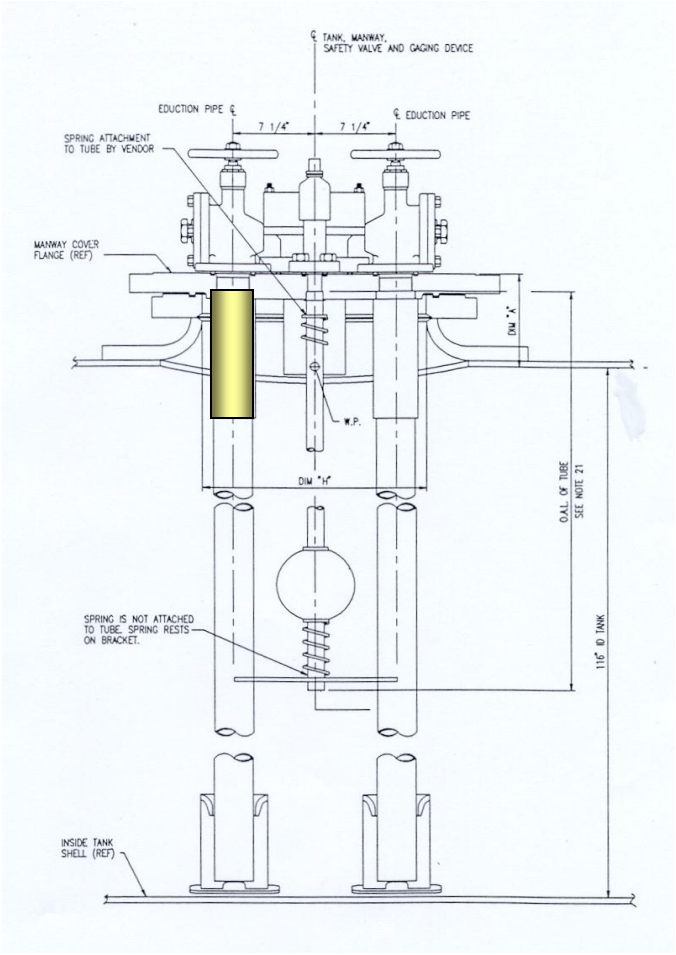

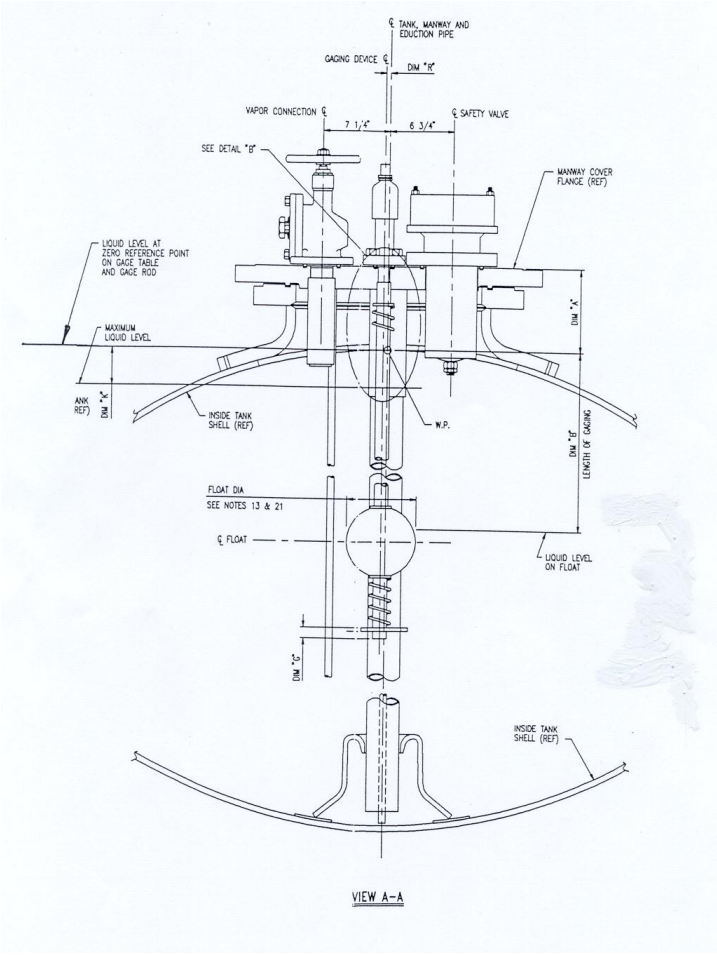

MIDLAND™

PART OF OPW FLUID TRANSFER GROUP

A DOVER™ COMPANY

Magnetic liquid level gauging device

TOP

Why are level gauges needed?

- **Per API (American Petroleum Institute) Manual of Petroleum Measurement Standards, Chapter 3 –Tank Gauging**
  - Section 2-Standard Practice for Gauging Petroleum and Petroleum Products in Tank Cars:
  - “When tank cars can be opened for manual measurements, gauge tapes bobs and gauge bars may be used to measure the level of liquid contents”.
  - “When tank cars **cannot** be opened for gauging contents, closed-system measurement equipment must be used for gauging”.

Typical Pressure Car Installation

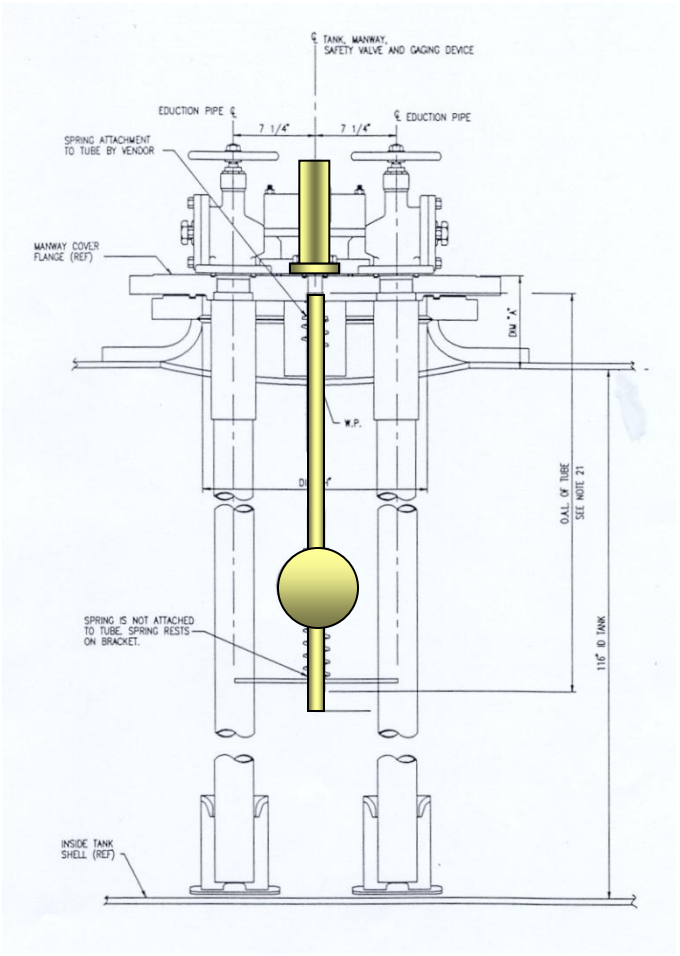

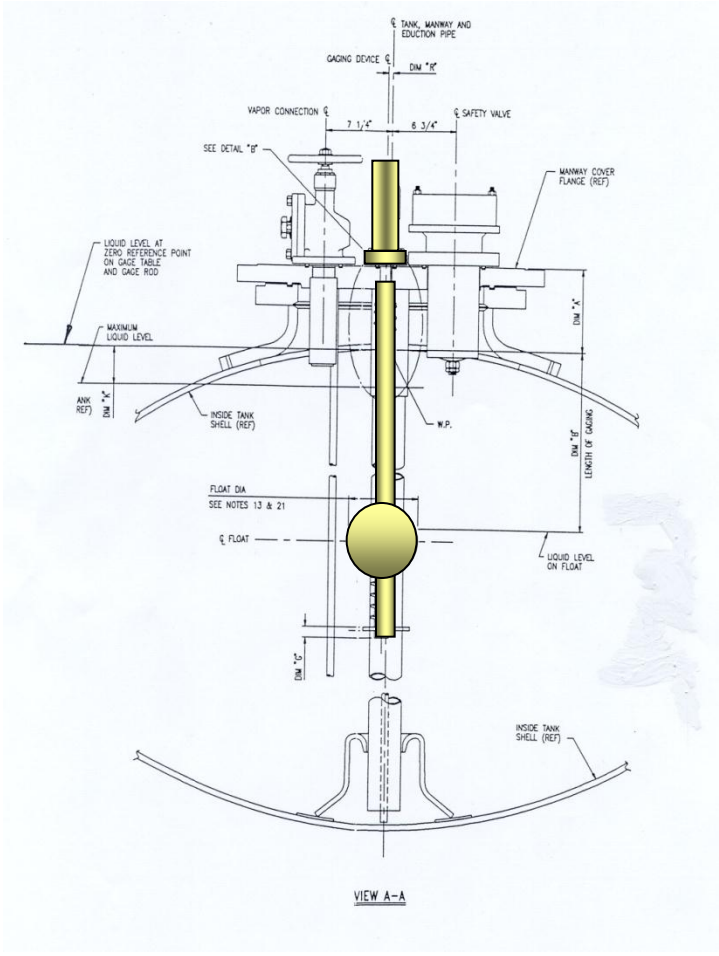

Main Components

- **Body**
- **Rod**
- **Guide tube**
- **Float**

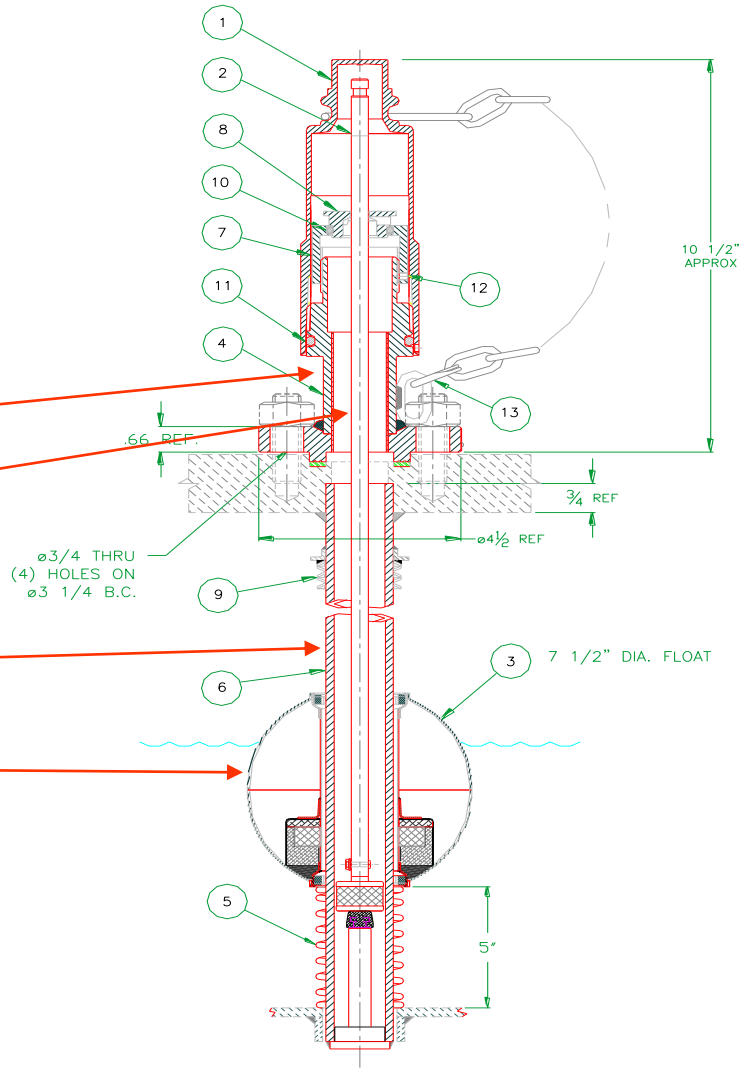

Needle Valves & Accessories

- Sample Valves
  - Needle Valve
- Thermowells
- Lift Assisters

NEEDLE VALVES

A-257-SS, A-257-MO

3/4" NPT

© 2002 Midland Manufacturing Corp.
All designs subject to change without notice. Installation dimensions and mounting arrangements are for general information. Certified drawings are available upon request.

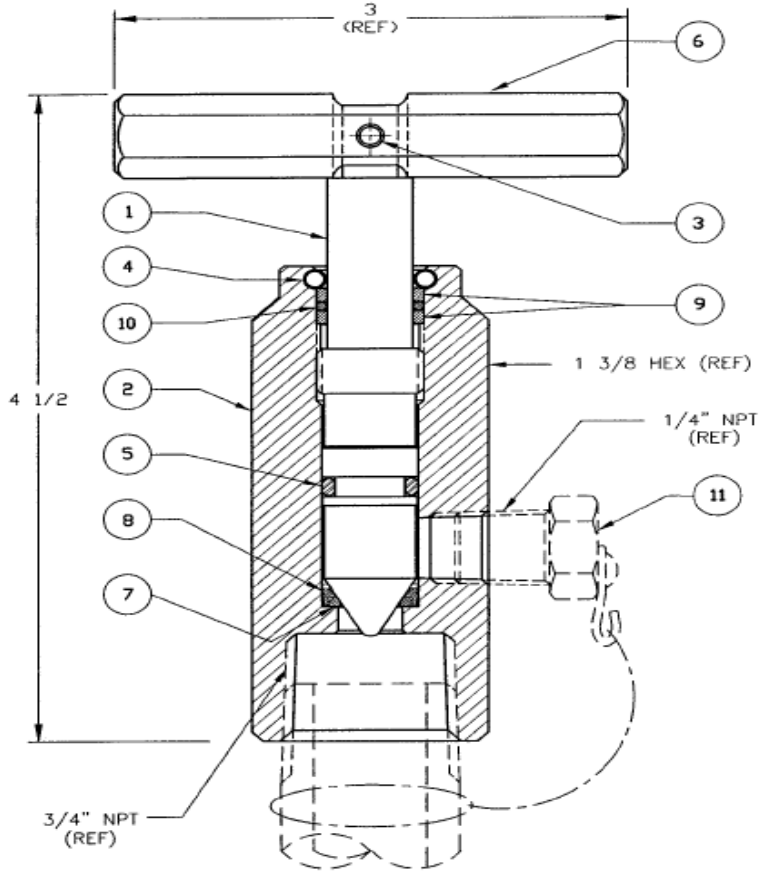

ITEM NO.	QTY.	PART NAME	A-257-SS		A-257-MO	
			MATERIAL	PART NO.	MATERIAL	PART NO.
1	1	STEM	STAINLESS	257-1-SS	STAINLESS	257-1-MO
2	1	BODY	STAINLESS	257-2-SS	STAINLESS	257-2-MO
3	1	PIN	STAINLESS	720-19-SS	STAINLESS	720-19-SS
4	2	ROLL PIN	STAINLESS	253-4-SS	STAINLESS	253-4-SS
5	1	"O" RING	BUNA-N[2]	257-5-BN	BUNA-N[2]	257-5-BN
6	1	HANDLE	STEEL	254-61-CS	STEEL	254-61-CS
7	1	SEAT	TEFLON	257-7-TF	TEFLON	257-7-TF
8	1	RETAINER	STAINLESS	257-8-SS	STAINLESS	257-8-MO
9	2	STOP RING	STAINLESS	257-9-SS	STAINLESS	257-9-SS
10	1	"O" RING	BUNA-N	257-10-BN	BUNA-N	257-10-BN
11	1	PLUG[1]	STAINLESS	20-SS	STAINLESS	20-MO

NOTE: 1 Not furnished unless requested. **2** Alternate material available.

LIFT ASSISTERS

- Available for use with either insulated or non-insulated manway covers
- Provides lifting assistance up to 88 lbs to improve operator safety
- Powder-coated springs to prevent corrosion in harsh chemical environments
- Unique low-profile lifter design doesn't interfere with personnel on top of the car
- Self-centering design prevents pinching and damage of the manway gasket, potentially reducing NAR's

Enhanced Fittings Package

NGRTC Enhanced Fittings
Or “Dual Valve Assemblies”

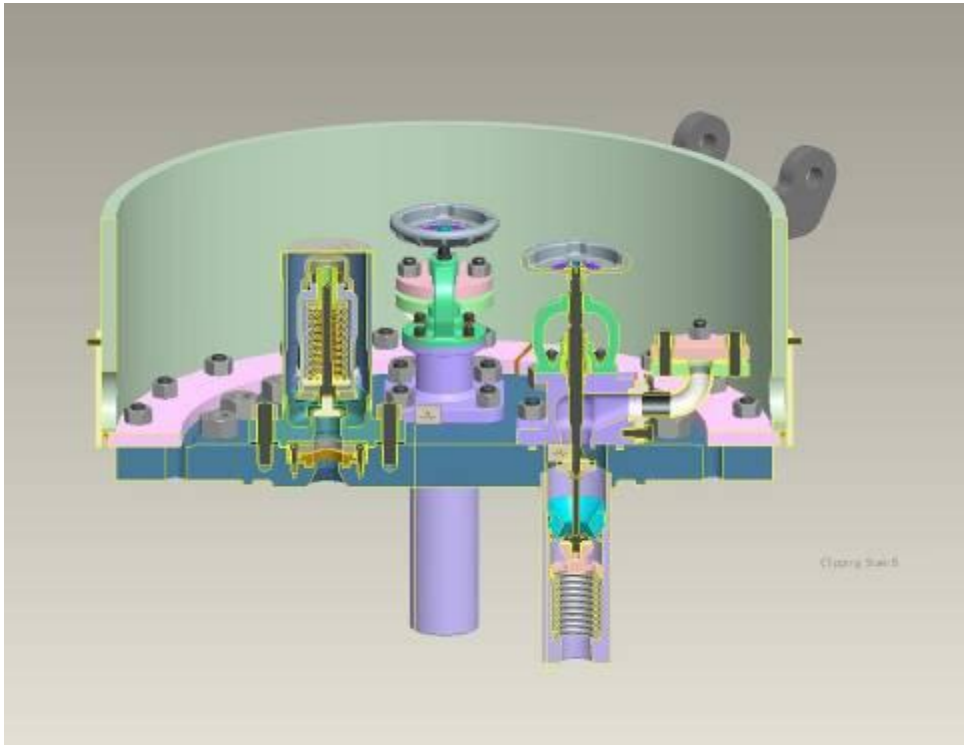

New NGRTC Combination Chlorine Angle & Check Valve

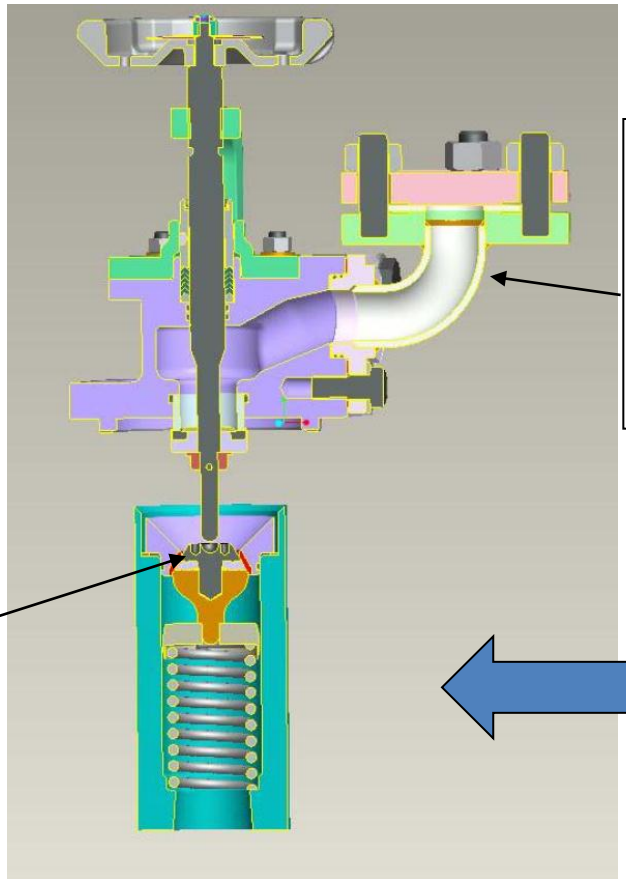

The A-718 is available with top loading or the traditional side loading

New angle valve operates in conjunction with check valve

Check Valve A-180-ML-TG

Enhanced Fittings Check Valve

A-180-ML-TG Enhanced Fittings Check Valve

Side View of the NGRTC Assembly

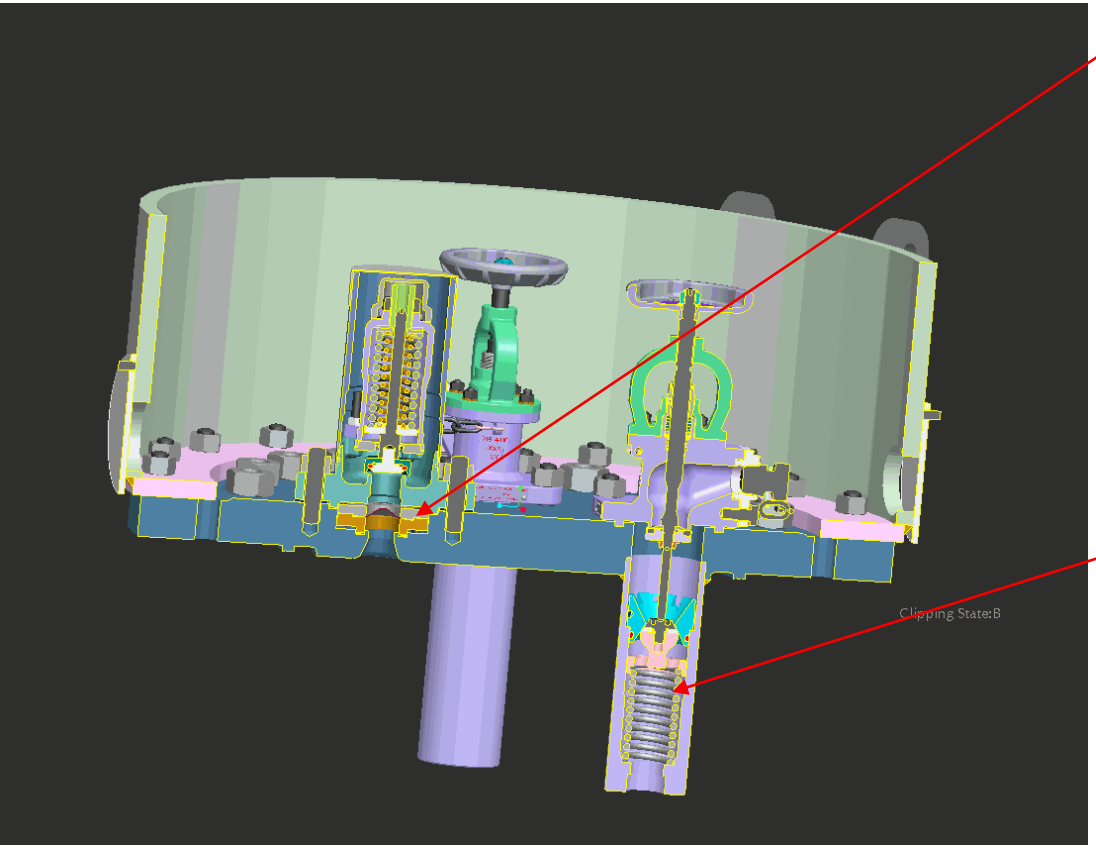

- **Note the PRV rupture disc is mounted in the pressure plate**
  - Mounting is separate from the PRV
- **The check valve is mechanically operated by the angle valve**
  - The check valve spring maintains a positive seal on the valve until pushed open by the angle valve stem
- **Primary seals are below the pressure plate surface**

NGRTC - A-14378-ML-VL

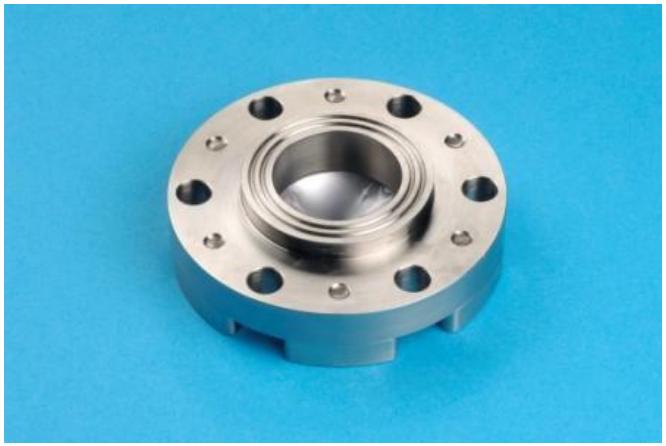

Enhanced Fittings Pressure Relief Valve

A-14378-ML-VL

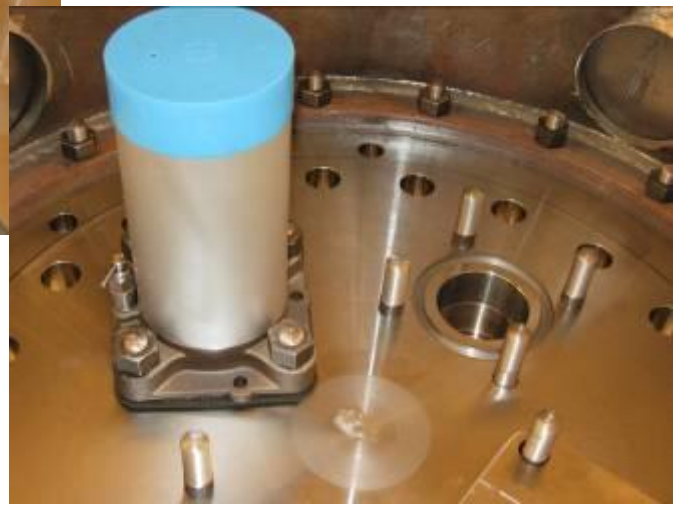

ERK and “C” Kit Mounting to the NGRTC “Enhanced Fittings” Package

Capping NGRTC “Enhanced Fittings”

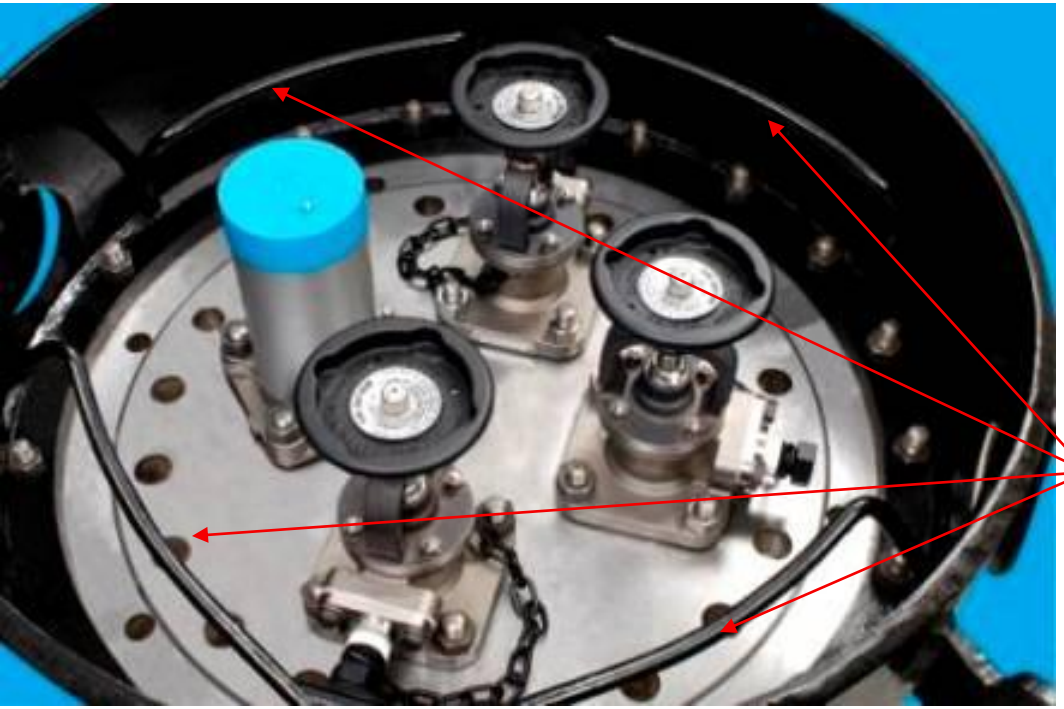

- **The NGRTC fittings package has a new protective housing for Chlorine applications**
  - Lower profile
  - Wider layout, equal to an LPG style or 20” housing
- **Four bars are mounted inside the housing to accommodate the “C” kit**

Mounting Options for Capping Kits

- **Note that two kits were able to be applied simultaneously using the bars inside the dome**
  - The Midland ERK could also use the port holes to connect just as is currently done today.
  - If using the port holes, only one kit could be applied at a time
- **The angle valves require the same capping can as the PRV**
  - Midland capping can #4 is the correct can to use
  - The C kit capping can 24A1 is the correct can to use

Mounting Options for Capping Kits

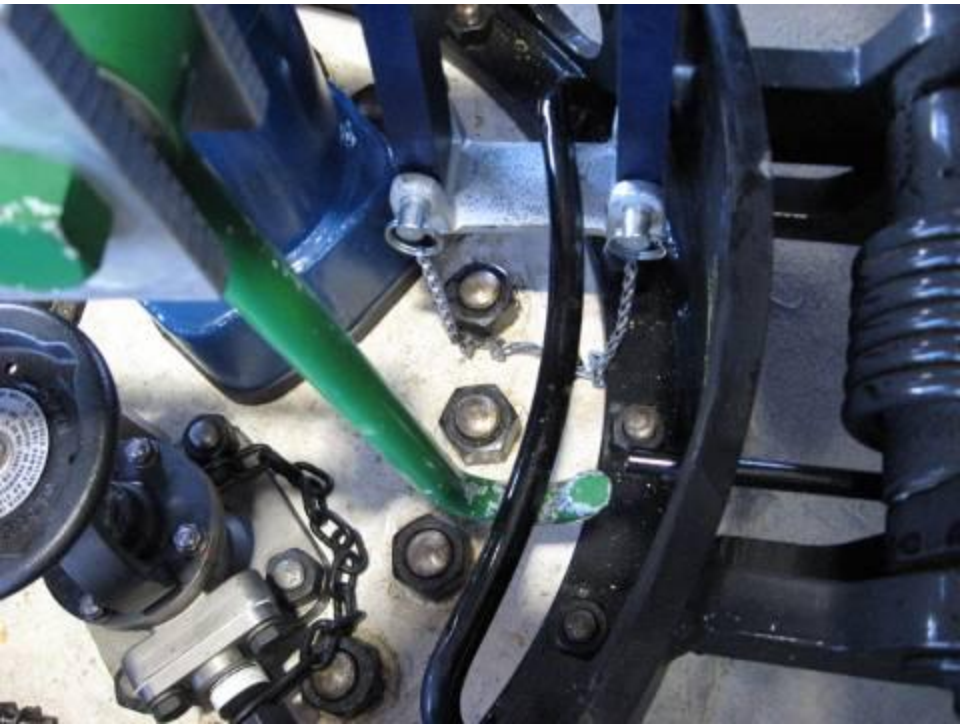

- With the four interior bars, the “C” kit hooks and the ERK tie bars have room to “find” the right spot to create a good connection for sealing over the capping can
- The bar does not interfere with the valves or the side of the protective housing

Mounting Options for Capping Kits

- **The Angle Valve does not require the hand wheel be removed before capping with the Midland #4 can or the C kit 24A1 can**
  - Removal of the hand wheel does make the application easier to accomplish
- **The flange face plate also needs to be removed before capping**
  - A recommended practice to aid in removal of the flange is to apply a 1” pipe (as shown) to help pull out the flange plate
  - The 1” pipe is not included in either the ERK or “C” kits and would need to be added
- **The chain and plug do not need to be removed, wrap these around the valve to keep out of the way of the can**

Mounting Options for Capping Kits

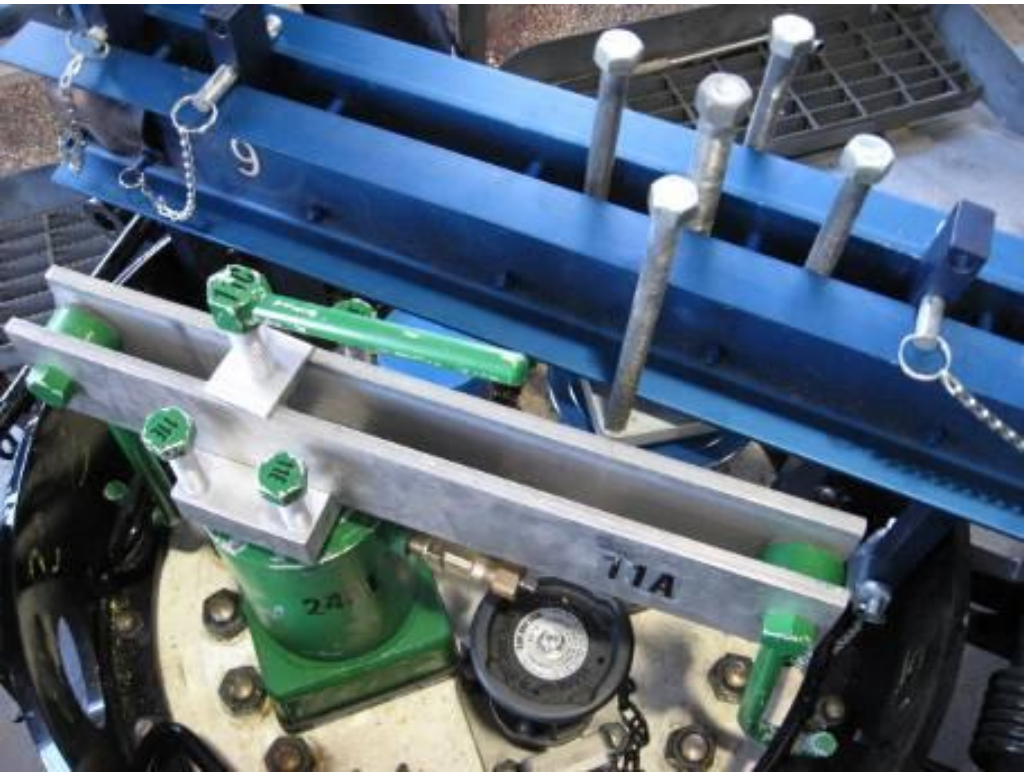

- **The bars have been used for the initial railcars. Other options could be considered in the future**
  - Any new designs need to consider the “reach” of the C kit hooks
- **The C kit will work in the port holes through the following:**
  - Unbolt one of the hooks
  - Mount both hooks into port holes
  - Re-attach the hook and tighten normally

OUR COMMON GOAL !