ADAMS BROADWELL JOSEPH & CARDOZO
A PROFESSIONAL CORPORATION
ATTORNEYS AT LAW
601 GATEWAY BOULEVARD, SUITE 1000
SOUTH SAN FRANCISCO, CA 94080-7037
TEL: (650) 589-1660
FAX: (650) 589-5062
lhorton@adamsbroadwell.com

DANIEL L. CARDOZO
THOMAS A. ENSLOW
TANYA A. GULESSERIAN
LAURA E. HORTON
MARC D. JOSEPH
RACHAEL E. KOSS
JAMIE L. MAULDIN
MEGHAN A. QUINN
ADAM J. REGELE
ELLEN L. TRESCOTT

SACRAMENTO OFFICE
520 CAPITOL MALL, SUITE 350
SACRAMENTO, CA 95814-4721
TEL: (916) 444-6201
FAX: (916) 444-6209

November 18, 2014

Via Email and U.S. Mail

Mr. Murry Wilson
Department of Planning and Building
San Luis Obispo County
976 Osos St., Rm. 200
San Luis Obispo, CA 93408-2040
Email: mwilson@co.slo.ca.us

Re: Phillips 66 Rail Spur Extension Project – Public Comment Deadline Extension Request (SCH# 2013071028)

Dear Mr. Wilson:

On behalf of Safe Fuel and Energy Resources California ("SAFER California"), we respectfully request that the County extend the time to comment on the Phillips 66 Company Rail Spur Extension Project Recirculated Draft Environmental Impact Report and Vertical Coastal Access Project Assessment ("RDEIR"). This request is based on the complexity of the issues involved in the RDEIR and County's failure to make available all documents we have requested in a timely manner.

Our office requested all documents referenced in the RDEIR and other documents under the Public Records Act on October 24, 2014. We also followed up with a specific request for data needed for a complete and adequate review of the RDEIR. We did receive a response on October 29, 2014 with documents referenced in the RDEIR. However, as of the morning of Tuesday November 18, less than one week from the deadline, we still have not received all of the documents we requested. Thus, pursuant to CEQA Guidelines section 15105, we respectfully request an extension of time to comment on this highly technical document. Given the fact that the Project has drawn much public attention, a finding requiring the maximum amount of time available for public comment under CEQA Guidelines section 15105 is warranted.

printed on recycled paper

Extending the existing comment deadline would ensure that the public is afforded adequate time to review the RDEIR and all supporting documents. Courts have emphasized the importance of a sufficient period for public review.[1] Therefore, we request that the comment period for this Project be extended by 30 days until Wednesday December 24. As you know, the currently noticed deadline for submitting comments on the Project RDEIR is November 24, 2014. Therefore time is of the essence. ABJC-01

By this letter, we also request written notification of any and all public hearings related to the Project, including CEQA-related hearings. With such notification, please include the time, date and location of the public hearing along with the decision making body that will be presiding over the hearing. We make this request for notice under California Public Resources Code Section 21092(b)(1) and Government Code Section 65092. ABJC-02

As the public comment deadline is fast approaching, we would appreciate the County's prompt response to this request. Thank you for your attention to this matter and please contact me if you have any questions.

Sincerely,

Laura E. Horton

LEH:clv

[1] *Ultramar v. South Coast Air Quality Man. Dist.* (1993) 17 Cal.App.4th 689.

ADAMS BROADWELL JOSEPH & CARDOZO
A PROFESSIONAL CORPORATION
ATTORNEYS AT LAW
601 GATEWAY BOULEVARD, SUITE 1000
SOUTH SAN FRANCISCO, CA 94080-7037
TEL: (650) 589-1660
FAX: (650) 589-5062
lhorton@adamsbroadwell.com

DANIEL L. CARDOZO
THOMAS A. ENSLOW
TANYA A. GULESSERIAN
LAURA E. HORTON
MARC D. JOSEPH
RACHAEL E. KOSS
JAMIE L. MAULDIN
MEGHAN A. QUINN
ADAM J. REGELE
ELLEN L. TRESCOTT

SACRAMENTO OFFICE
520 CAPITOL MALL, SUITE 350
SACRAMENTO, CA 95814-4721
TEL: (916) 444-6201
FAX: (916) 444-6209

November 24, 2014

Via Overnight and Electronic Mail

Murry Wilson
San Luis Obispo County
Department of Planning and Building
976 Osos St., Rm 200
San Luis Obispo, CA 93408-2040
Email: p66-railspur-comments@co.slo.ca.us

Re: Comments on the Recirculated Draft Environmental Impact Report for the Phillips 66 Company Rail Spur Extension Project and Vertical Coastal Access Project Assessment

Dear Mr. Wilson:

We are writing on behalf of Safe Fuel and Energy Resources California ("SAFER California"), Ian Ostrov and Gene Sewall to provide comments on the Recirculated Draft Environmental Impact Report ("RDEIR") for the Phillips 66 Company Rail Spur Extension Project ("Project") and Vertical Coastal Access Project Assessment ("VCA"). The RDEIR was prepared by the San Luis Obispo County Department of Planning and Building ("County") pursuant to the California Environmental Quality Act ("CEQA").[1] SAFER California provided comments on the original DEIR on January 27, 2014, identifying many fatal defects in the document. The County then revised and recirculated the document with new analysis. Although the RDEIR addresses several of the errors we identified, there are still many more errors remaining, as well as new ones. Thus, the RDEIR fails to meet the requirements of CEQA.

The Project proposes to modify an existing rail spur at its Santa Maria Refinery ("SMR") and to construct a new offloading facility to accommodate an average of between 35,478 and 38,237 barrels per day of crude oil to be shipped by

[1] Pub. Resources Code, §§ 21000 et seq.

printed on recycled paper

rail to the SMR for processing.[2] The offloading facility would be located at an existing coke storage area within the SMR. The Project includes unloading up to five trains per week, with an annual maximum number of trains expected to be approximately 250.[3] According to the RDEIR, the refinery feedstock (i.e. crude oil) would be sourced from oilfields throughout North America, including Canada.[4]

The Project is proposed within the Coastal Zone, approximately one mile from Highway 1 and approximately 3.5 miles west of the community of Nipomo in southern San Luis Obispo County.[5] According to the RDEIR, Project construction would occur within the SMR.[6] The SMR and the Phillips 66 Rodeo Refinery are linked by a 200-mile pipeline, and are collectively referred to in the RDEIR as the "San Francisco Refinery."[7] The Rodeo Refinery is located in Contra Costa County. In addition to being physically linked, the SMR and the Rodeo Refinery have integrated refining operations. The SMR processes heavy crude oil, and semi-refined liquid products are sent by pipeline from the SMR to the Rodeo Refinery for upgrading into finished petroleum products.[8]

Phillips 66 seeks authorization from San Luis Obispo County for an extension of the existing rail spur off the Union Pacific rail mainline, construction of an oil railcar unloading facility including a small parking area and restroom facilities, a pipeline, and an unpaved eastern Emergency Vehicle Access route between the eastern end of the rail spur and Highway 1, as well as work within the existing refinery connecting and upgrading existing infrastructure, including adding a new electricity cable to an existing pipeway and a new fire water pipeline to an existing pipe rack.[9] The Project requires numerous permits, including a Coastal Development Permit, from the County and authorizations from the San Luis Obispo County Air Pollution Control District ("APCD"), CAL FIRE, and State Water

---

[2] Phillips 66 Company Rail Spur Extension Project Recirculated Draft Environmental Impact Report ("RDEIR"), p. ES-5; 2-23. The RDEIR anticipates 5 unit train deliveries per week. Each unit train can hold between 49,670 and 53,532 barrels of crude oil. Those calculations were then averaged over seven days.
[3] RDEIR, p. 2-22.
[4] *Id.*, at 1-4, 2-22.
[5] *Id.*, at ES-1.
[6] *Id.*, at 2-6.
[7] *Id.*, at 2-4.
[8] *Id.*, at 2-5, 2-31.
[9] *Id.*, at 2-5 – 2-19.

Resources Control Board.[10] The Project may also require Incidental Take Permits from the U.S. Fish and Wildlife Service ("FWS") and the California Department of Fish and Wildlife ("CDFW") for the federally endangered Nipomo Mesa lupine ("NML"), as well as approvals from the Central Coast Regional Water Control Board ("CCRWCB") and the California Public Utilities Commission ("CPUC").[11]

In the RDEIR, the County also conducts programmatic CEQA review of the VCA.[12] As a condition of approval of the Phillips 66 Throughput Increase Project, Phillips 66 is required to provide a vertical public right of coastal access at the SMR Site, in accordance with the County's Coastal Zone Land Use Ordinance. The bulk of these comments is focused on the Project, but also includes some additional comments on the VCA.

Based upon our review of the RDEIR, appendices, and other relevant records, we conclude that the RDEIR still fails to meet the requirements under CEQA. The Project description again unlawfully piecemeals environmental review, does not adequately address the crude switch, and completely fails to address decommissioning. In addition, the RDEIR fails to provide a sufficiently detailed environmental setting for air quality and fails to reduce the Project's potentially significant impacts on various resources. The RDEIR also fails to incorporate feasible mitigation into the Project to reduce the significant air quality impacts identified in the RDEIR, and several of the mitigation measures for air quality, biological resources, and water that *are* incorporated in the RDEIR are otherwise inadequate and must be revised. The Project is also inconsistent with coastal land use plans, laws, and policies. Furthermore, the programmatic analysis of the VCA is unsupported. These defects render the RDEIR inadequate as an informational document.

We prepared these comments with the assistance of air quality expert Petra Pless, Ph.D and biologist Scott Cashen. Dr. Pless's and Mr. Cashen's technical comments are attached hereto as **Attachment 1** and **Attachment 2**, respectively, and submitted in addition to the comments in this letter. Dr. Pless and Mr. Cashen's comments are fully incorporated herein. We also incorporate by reference comments on this Project submitted by Dr. Phyllis Fox. The County must address and respond to the comments of Dr. Pless and Mr. Cashen separately.

---

[10] *Id.*, at 1-6.
[11] *Id.*
[12] *Id.*, at ES-18.

I. INTEREST OF COMMENTORS

SAFER California advocates for safe processes at California refineries to protect the health, safety, the standard of life and the economic interests of its members. For this reason, SAFER California has a strong interest in enforcing environmental laws, such as CEQA, which require the disclosure of potential environmental impacts of, and ensure safe operations and processes for, California oil refineries. Failure to adequately address the environmental impacts of crude oil transport and refining processes poses a substantial threat to the environment, worker health, surrounding communities, and the local economy.

Refineries are uniquely dangerous and capable of generating significant fires and the emission of hazardous and toxic substances that adversely impact air quality, water quality, biological resources and public health and safety. These risks were recognized by the Legislature and Governor when enacting SB 54 (Hancock). Absent adequate disclosure and mitigation of hazardous materials and processes, refinery workers and surrounding communities may be subject to chronic health problems and the risk of bodily injury and death. Additionally, rail transport of crude oil has been involved in major explosions, causing vast economic damage, significant emissions of air contaminants and carcinogens and, in some cases, severe injuries and fatalities.

Poorly planned refinery projects also adversely impact the economic wellbeing of people who perform construction and maintenance work in the refinery and the surrounding communities. Plant shutdowns in the event of accidental release and infrastructure breakdown have caused prolonged work stoppages. Such nuisance conditions and catastrophic events impact local communities and can jeopardize future jobs by making it more difficult and more expensive for businesses to locate and people to live in the area. The participants in SAFER California are also concerned about projects that carry serious environmental risks and public service infrastructure demands without providing countervailing employment and economic benefits to local workers and communities.

The members represented by the participants in SAFER California live, work, recreate and raise their families in San Luis Obispo County, including the towns of Arroyo Grande and Santa Maria. Accordingly, these people would be directly affected by the Project's adverse environmental impacts. The members of

SAFER California's participating unions may also work on the Project itself. They will, therefore, be first in line to be exposed to any hazardous materials, air contaminants, and other health and safety hazards, that exist onsite.

These comments are also submitted on behalf of Mr. Ian Ostrov, who lives and works in the vicinity of the Project, and Mr. Gene Sewell who lives and works in Arroyo Grande, California.

II. THE PROJECT DESCRIPTION IS INADEQUATE

CEQA Guidelines section 15378 defines "project" to mean "the whole of an action, which has a potential for resulting in either a direct physical change in the environment, or a reasonably foreseeable indirect physical change in the environment."[13] "The term 'project' refers to the activity which is being approved and which may be subject to several discretionary approvals by governmental agencies. The term project does not mean each separate governmental approval."[14] Courts have explained that a complete description of a project has to address not only the immediate environmental consequences of going forward with the project, but also all "*reasonably foreseeable* consequence[s] of the initial project."[15] "If a[n] . . . EIR. . . does not adequately apprise all interested parties of the true scope of the project for intelligent weighing of the environmental consequences of the project, informed decisionmaking cannot occur under CEQA and the final EIR is inadequate as a matter of law."[16] ABJC-03

The RDEIR fails to meet CEQA's requirements for an adequate project description, by omitting from the analysis the reasonably foreseeable consequences of the Project. In particular, the RDEIR still fails to identify and analyze the separately proposed but related Rodeo Refinery Propane Recovery Project and the SMR Throughput Increase Project as part of the Project. In addition, although the RDEIR acknowledges likely changes to existing SMR feedstock, it fails to identify the changes as part of the Project and analyze the related environmental impacts of those changes. Finally, the RDEIR fails to provide any assessment whatsoever of

---

[13] 14 Cal.Code Regs, tit. 14, §15378 (hereinafter "CEQA Guidelines").
[14] CEQA Guidelines § 15378(c).
[15] *Laurel Heights Improvement Association v. Regents of University of California* (1988) 47 Cal.3d 376 (emphasis added); *see also Vineyard Area Citizens for Responsible Growth, Inc. v. City of Rancho Cordova* (2007) 40 Cal.4th 412, 449-50.
[16] *Riverwatch v. Olivenhain Municipal Water Dist.* (2009) 170 Cal.App.4th 1186, 1201.

the Project's future decommissioning phase and potential impacts thereof. These defects in the County's analysis constitute fatal errors. The County has failed to make *all* necessary changes to its environmental review of the Project, and must again revise the RDEIR to address the defects set forth in greater detail in the following paragraphs. ABJC-03 cont

A. The RDEIR Violates CEQA's Prohibition on Piecemeal Environmental Review

A public agency may not segment a large project into two or more smaller projects in order to mask serious environmental consequences. CEQA prohibits such a "piecemeal" approach and requires review of a project's impacts as a whole.[17] CEQA mandates "that environmental considerations do not become submerged by chopping a large project into many little ones – each with a minimal potential impact on the environment – which cumulatively may have disastrous consequences."[18] Before approving a project, a lead agency must assess the environmental impacts of all reasonably foreseeable phases of a project.[19] "The significance of an accurate project description is manifest where," as here, "environmental impacts may be disguised or minimized by filing numerous, serial applications."[20] ABJC-04

The California Supreme Court held that an environmental impact report ("EIR") must treat activities as part of the project where the activities at issue are "a reasonably foreseeable consequence of the initial project and the future expansion or action will be significant in that it will likely change the scope or nature of the initial project or its environmental effects."[21] Both elements are met here. The Project is inextricably linked to both the Throughput Increase and Propane Recovery projects, and will change the scope of each project's environmental effects.

---

[17] CEQA Guidelines, § 15378(a); *Burbank- Glendale-Pasadena Airport Authority v. Hensler* (1991) 233 Cal.App.3d 577, 592.
[18] *Bozung v. Local Agency Formation Commission* (1975) 13 Cal.3d 263, 283-84; *City of Santee v. County of San Diego* (1989) 214 Cal.App.3d 1438, 1452.
[19] *Laurel Heights Improvement Assn. v. Regents of University of California* (1988) 47 Cal.3d 376, 396-397 (EIR held inadequate for failure to assess impacts of second phase of pharmacy school's occupancy of a new medical research facility).
[20] *Arviv Enterprises v. South Valley Area Planning Commission* (2002) 101 Cal.App.4th 1333, 1346.
[21] *Laurel Heights Improvement Association v. Regents of the University of California* (1988) 47 Cal.3d 376, 396.

These separately proposed changes within the San Francisco Refinery must be analyzed as one Project in the revised DEIR.

The SMR Throughput Increase Project was proposed by Phillips 66 to increase the maximum limit of crude oil throughput at the SMR by 10 percent.[22] According to the Throughput Increase Project FEIR, the project would potentially increase the volumes of crude oil delivered to the SMR and increase the volume of products leaving the SMR by pipeline to the Rodeo Refinery, among other changes.[23] The County and the APCD jointly approved the Throughput Increase Project in 2013.

Phillips 66 proposed the Propane Recovery Project at the Rodeo Refinery in 2012.[24] The purpose of that project is to modify existing facilities at the Rodeo Refinery to enable the Rodeo Refinery to recover additional propane and butane from refinery fuel gas and other process streams and ship it by rail and truck for sale.[25] Contra Costa County released an Final Environmental Impact Report ("FEIR") for the project in November 2013 and then revised and recirculated a new DEIR in October 2014.[26]

ABJC-04 cont

As described by Dr. Petra Pless in her comments, information contained in the Project RDEIR makes clear that the throughput increase at the SMR could not be realized but for the crude oil that would be brought in by rail.[27] In particular, the RDEIR indicates that the SMR would be unable to continue operating at current throughput levels if the Rail Spur Project were not implemented.[28] According to the RDEIR, the bulk of the crude oil currently processed at the SMR is delivered via pipeline from offshore platforms in the Outer Continental Shelf of Santa Barbara.[29] The pipeline system is currently the only way that the SMR can receive crude oil.[30]

---

[22] Phillips Santa Maria Refinery, Throughput Increase Project FEIR, Nov. 2012, at p. ES-1.
[23] *Id.*, at p. ES-4.
[24] *See* Phillips 66 Propane Recovery Project Recirculated Draft Environmental Impact Report (October 2014), p. 1-1, *available at* http://www.cccounty.us/DocumentCenter/View/33804.
[25] *Id.*
[26] *Id.*
[27] *See* Letter from Petra Pless, to Laura Horton re: Recirculated Draft Environmental Impact Report for the Phillips 66 Company Rail Spur Extension Project and Vertical Coastal Access Project Assessment (hereinafter, "Pless Comments"), p. 10 – 11, **Attachment 1.**
[28] *Id.*
[29] RDEIR, p. 2-31
[30] Pless Comments, p. 11.

While crude oil can also be trucked to the Santa Maria Pump Station and then placed into the pipeline, truck deliveries to the Santa Maria Pump Station are limited to a permitted maximum of 26,000 barrels per day,[31] far below the SMR's throughput limit of 48,950 barrels per day sought by the SMR Throughput Increase Project.[32] Thus, absent further permit revisions, any additional crude would have to be brought to the SMR by rail, demonstrating the entirely foreseeable need for this Project.

As further documented by Dr. Pless, crude oil production in California has been in substantial decline for decades.[33] For example, the RDEIR discloses that crude oil production in Santa Barbara County, both onshore and off-shore, has been in decline for a number of years.[34] Given the limitations on truck import to the Santa Maria Pump Station and the long-standing knowledge of a declining crude oil supply,[35] particularly from the off-shore sources in the Outer Continental Shelf, Dr. Pless concludes that it is highly unlikely that Phillips 66 would have sought an increase in throughput at the SMR without simultaneously contemplating additional ways to deliver crude oil to the facility.[36] In other words, a throughput increase cannot be implemented at the SMR unless Phillips 66 can import crude to offset declining local crude supplies. Dr. Pless's analysis makes clear that the Project is a reasonably foreseeable consequence of the Throughput Increase Project. ABJC-05

Furthermore, Dr. Pless demonstrates that the Propane Recovery Project cannot be implemented but for the Rail Spur Extension Project. The Rodeo project aims to recover additional propane and butane. In order for the Applicant to reach Propane Recovery Project goals, the Applicant must depend on the Throughput Increase Project and this Project. As explained by Dr. Pless,

---

[31] *Id.*, RDEIR, p. 2-36.
[32] Pless Comments, p. 11; Throughput Increase Project FEIR, p. 2-24; RDEIR, p. 2-35.
[33] Pless Comments, p. 9.
[34] RDEIR, p. 2-36.
[35] *See, e. g.*, California Energy Commission, California Crude Oil Production and Imports, CEC-600-2006-006 (April 2006) Figure 2, p. 4, *available at* http://www.energy.ca.gov/2006publications/CEC-600-2006-006/CEC-600-2006-006.PDF; *see* California Energy Commission, Transportation Energy Forecasts and Analyses for the 2009 Integrated Energy Policy Report, CEC-600-2010-002-SF (May 2010) p. 6, *available at* http://www.energy.ca.gov/2010publications/CEC-600-2010-002/CEC-600-2010-002-SF.PDF.
[36] *See* Pless Comments.

> This increased quantity of semi-refined products would result in increased propane and butane recovery at the Rodeo Refinery, which Phillips 66 must have anticipated when it applied for a permit to modify processing and ancillary equipment within the refinery and change permit conditions to enable substantially increasing the recovery of propane and butane.. . .[37]

The Project will also will likely change the scope or nature of the environmental effects of the Throughput Increase Project and the Propane Recovery Project.[38] As described above and in the comments of Dr. Pless, cost-advantaged North American crude is chemically distinct from the crude that is currently processed at the SMR. A change in the chemical composition of the SMR crude would also alter the chemical composition and the environmental impacts of the semi-refined products that would be sent from the SMR to the Rodeo Refinery to be converted into sellable petroleum products.

ABJC-05 cont

The fact that the Throughput Increase Project has already been approved does not negate the requirement for preparing a revised DEIR which analyzes the whole of the Project. The requirement to evaluate the whole of a project applies even where one of the phases has already undergone prior environmental review. It was precisely such piecemealing that was rejected by the Second District in the *Natural Resources Defense Council v. City of Los Angeles* case.[39] In that case, the Port of Los Angeles analyzed Phase 2 of a three-phase project in a negative declaration. The Court held that an EIR was required to analyze the entire three-phase project as a whole, even though earlier CEQA review had been completed on Phase I of the project.[40] Similarly here, the County must prepare a revised DEIR to analyze the impacts of the Project, together with the Throughput Increase Project and the Propane Recovery Project, rather than analyzing each individual proposal as unrelated and distinct projects.

The RDEIR directly denies that it is piecemealing CEQA review with regard to the Throughput Increase Project, stating that "[t]he Rail Spur Project would not affect the amount (throughput volume) of material processed at the refinery."[41]

---

[37] *Id.*, at 17.
[38] *Id.*
[39] *Natural Resources Defense Council v. City of Los Angeles* (2002) 103 Cal.App.4th 268, 284.
[40] *Id.*
[41] *Id.*, at ES-23.

However, the RDEIR later states that "if and when local crude oil production (the current major source of oil for the SMR) declines, the Rail Spur Project, if approved, would allow the SMR to maintain operating up to its permitted throughput levels."[42] Thus, the County clearly anticipates the SMR relying on the Rail Spur Project in order to maintain the SMR's new throughput volume and operating level.

The RDEIR further explains that because the land use applications for the Throughput Increase Project and this Project were submitted apart, "evaluation of these projects separately would not be considered 'piece-mealing' under CEQA."[43] However, as Dr. Pless notes, "Phillips 66 commissioned specific studies in preparation of the CEQA review process for the Rail Spur Project well before the Throughput Project EIR was certified in March of 2013."[44] The County does include the Throughput Increase Project in its cumulative impacts analysis,[45] along with other nearby projects. However, because the Throughput Project is intertwined with this Project, the RDEIR may not lawfully treat them as separate. The RDEIR does not at all address the Propane Recovery Project's relationship to this Project. ABJC-05 cont

The CEQA Guidelines clearly state that "[w]here an individual project is a necessary precedent for action on a larger project, or commits the lead agency to a larger project, with significant environmental effect, an EIR must address itself to the scope of the larger project."[46] Furthermore, the Guidelines explain that cumulative analysis is only appropriate "[w]here one project is one of several similar projects of a public agency, but is not deemed a part of a larger undertaking or a larger project."[47] Here, the Project, along with the Throughput Increase Project and the Propane Recovery Project, are part of the same "larger undertaking" to make the entire San Francisco Refinery more modern and economically advantageous by bringing in more lower cost crudes and producing more marketable products from those crudes.[48]

---

[42] *Id.*
[43] *Id.*
[44] Pless Comments, p. 7.
[45] RDEIR, p. 3-2.
[46] CEQA Guidelines § 15165.
[47] *Id.*
[48] *See* Phillips 66 Propane Recovery Project Recirculated Draft Environmental Impact Report (October 2014), p. ES-2, *available at* http://www.cccounty.us/DocumentCenter/View/33804.

B. The RDEIR Fails to Adequately Address the Change in Refinery Feedstock

In *Communities for a Better Environment v. City of Richmond* ("*CBE v. Richmond*"), the First District Court of Appeal held that an EIR for a refinery project must disclose whether the proposed equipment and facility changes would allow the refinery to process heavier crude where a change in feedstock is a reasonably foreseeable consequence of the proposed project.[49] There, petitioners argued that the EIR was inadequate because the project description failed to clearly and consistently state whether the project would facilitate the future processing of heavier crudes at the refinery, and to analyze the consequences of such a change.[50] In that case, the EIR acknowledged that the proposed project would allow the refinery to process a wider range of crude oils, including crude that contains a higher amount of sulfur and associated contaminants.[51]

However, the lead agency denied claims that the refinery would also be able to process heavier crudes than before.[52] Petitioners pointed to conflicting statements in the EIR and the project proponent's SEC filings, as well as the project proponent's rejection of a permit limitation precluding the alteration of the baseline crude slate mix, all of which suggested that the project would, contrary to the lead agency's claim, enable the refinery to process heavier crudes.[53] The court agreed with petitioner that a crude switch was reasonably foreseeable and invalidated the EIR "because the EIR's project description ... [was] inconsistent and obscure as to whether the Project enables the Refinery to process heavier crudes."[54]

ABJC-06

Here, the County acknowledges the potential for processing new crudes in the future, but claims that no analysis is required because those crudes will be close enough in chemical composition to existing crude. The RDEIR states that "Phillips 66 expects to continue to receive, blend and process a comparable range of crudes in the future, and will select future crude to be delivered by rail based upon a number

---

[49] *See Communities for a Better Environment v. City of Richmond* (2010) 184 Cal.App.4th 70, 89.
[50] *Id.*, at 83.
[51] *Id.*, at 76-77.
[52] *See id.*
[53] *Id.*, at 83-85.
[54] *Id.*, at 89.

of factors including availability, suitability, and economics."[55] However, as in the case of *CBE v. Richmond*, a change in feedstock is reasonably foreseeable from evidence in the record and that change must actually be analyzed in the environmental review document.

The RDEIR admits that it has already been processing diluted bitumen, or dilbit, crude (i.e. tar sands crude) from Canada for a year, and that "Canadian crude has made up 2-7% of the crude processed at the SMR."[56] It further identifies potential new tar sands crudes called Access Western Blend and Peace River Heavy from Canada and suggests they are comparable to current crude imports.[57] However, the new crudes have never been assessed under CEQA and the information provided in the RDEIR does not satisfy CEQA requirements to disclose all potential significant impacts. As explained by Dr. Pless, the description of the new crudes in the RDEIR "remains too vague and does not cover the spectrum of properties of crude oils that could be imported by the Rail Spur Project for processing at the SMR."[58] Potential safety concerns have been raised over pipeline shipments of tar sands crude, specifically, and according to the Environmental Protection Agency ("EPA"), tar sands crude oil spills may result in different impacts than spills of other crude oils.[59] Furthermore, spills of tar sands crude could cost almost twice as much to clean up as comparable spills of conventional crude oil.[60] In addition, Dr. Pless points out that although the RDEIR claims it will not be importing Bakken crude, the County has not ensured against the importation of other similar light sweet crude oil.[61] As Dr. Pless demonstrates in her comments, the likely change in chemical composition of new crudes triggers the requirement to review potentially significant impacts.[62]

ABJC-06 cont

---

[55] RDEIR, p. 2-33.
[56] *Id.*, at 2-31.
[57] *Id.*, at 2-33; 4.3-45.
[58] Pless Comments, p. 19.
[59] *See* CRS Report R42611, Jonathan L. Ramseur, et. al, *Oil Sands and the Keystone XL Pipeline: Background and Selected Environmental Issues* (April 2014); *See* comments from EPA on the Department of State Keystone XL Pipeline draft Supplemental Environmental Impact Statement, submitted in a letter from Cynthia Giles to Jose Fernandez and Kerri-Ann Jones (April 22, 2013).
[60] CRS Report R42611, *supra*, at 46 (citing Dagmar Etkin, *Modeling Oil Spill Response and Damages Costs*, Proceedings of the 5th Biennial Freshwater Spills Symposium (2004)).
[61] *Id.*, at 20.
[62] *See* Pless Comments, p. 21.

Dr. Pless concludes that for the RDEIR to have an adequate description of the crude oils that would be permitted to be imported by the Rail Spur Project, it must include "limits for, at a minimum, API gravity, vapor pressure, and concentrations of BTEX (benzene, toluene, ethylene, xylene), nickel, vanadium, and sulfur in order to ensure that SMR operations would not result in impacts beyond those analyzed in the Revised Draft EIR."[63] Those impacts could include "the production of coke and sulfur, an increase in fugitive emissions when processing a lighter, more volatile crude oil, increasing the metal content of the produced coke, odors, associated health risks, risk of upset due to increased corrosion and so forth."[64]

Statements in the RDEIR and Phillips 66's public representations all suggest that Phillips 66 is undertaking the larger Project, including the Throughput Increase Project and the Propane Recovery Project, in order to access a greater range of competitively priced crudes than what is being suggested by the County. Thus, the County lacks substantial evidence to support its claim that the RDEIR need not analyze the anticipated change in crudes to be processed. ABJC-06 cont

1. Statements in the RDEIR

According to the RDEIR, the purpose of the Project is "to obtain a range of competitively priced crude oil" by providing the capability to source feedstock from North American sources that are served by rail.[65] The RDEIR further provides that feedstock deliveries "would be sourced from oilfields throughout North America based on availability, market economics, as well as other factors."[66] The potential new North American crudes referenced in the RDEIR include Canadian tar sands crudes. These crudes are also chemically distinct from the current feedstock, because North American crudes contain large quantities of volatile diluents and toxic chemicals and require more heat and energy to refine than the current feedstock. Furthermore, other potentially significant impacts, such as increased energy consumption, air emissions, toxic pollutant releases, flaring and catastrophic incident risks, also depend on the quality of crude processed at a facility. In addition, a heavier crude oil feedstock has also been identified as a contributing factor to potentially catastrophic incidents at refineries, and a root cause of the

[63] *Id.*
[64] *Id.*
[65] RDEIR, p. 2-1.
[66] *Id.*, at 1-4.

August 6, 2012 fire at the Chevron Richmond Refinery.[67] The RDEIR admits to changes in chemical content, stating "crude delivered by rail could have slightly higher sulfur content then the typical crude blend that is currently being run by the refinery."[68] However, the RDEIR then concludes, without further analysis, that the change in sulfur content would not cause increased emissions.[69]

The RDEIR's suggestion that the Project will only bring in feedstock that is "comparable to those historically processed at the facility"[70] is seemingly inconsistent with the RDEIR's assurance that any new feedstock would go through California Division of Occupational Safety and Health ("CalOSHA's") Management of Feedstock Change Process, which requires an assessment of "any potential adverse impacts to overall refinery operations, including environmental conditions and / or product quality."[71] The latter statement identifies a foreseeable scenario in which the anticipated change in feedstock would require review by CalOSHA. However, the County cannot lawfully justify its failure to analyze and mitigate a potentially significant impact by deferring to a completely separate, non-CEQA CalOSHA review.

ABJC-06 cont

Further evidence of a crude switch is the RDEIR's admission that the Project is necessary to offset the decline in locally sourced crudes currently processed at the SMR. The RDEIR states that "if and when local crude oil production (the current major source of oil for the SMR) declines, the Rail Spur Project, if approved would allow the SMR to maintain operating up to its permitted throughput levels."[72] The Santa Maria Refinery currently receives all crude oil by pipeline from various, primarily local sources, including the Outer Continental Shelf (60-85%), Price Canyon/Santa Maria Valley/San Joaquin Valley (5-20%), San Ardo (5-10%) and Canada (2-7%).[73] Most of these crudes are in decline, particularly offshore sources which are a major feedstock source for the SMR.[74] As explained by Dr. Pless, these local crudes are chemically distinct from the Canadian crudes that could be imported by rail to the SMR if and when the Project is approved.[75]

---

[67] *See* Chemical Safety Board Interim Report on Chevron Fire, (April 19, 2013).
[68] RDEIR, p. 4.3-46 – 46.
[69] *Id.*, at 4.3-46.
[70] *Id.*, at 2-34.
[71] *Id.*
[72] *Id.*, at ES-23.
[73] *Id.*, at 2-31.
[74] *Id.*, at 2-36.
[75] *See* Pless Comments.

2. Public Statements

Public statements by Phillips 66 also strongly suggest that the purpose of the Project is to allow Phillips 66 to change the feedstock at the SMR to "advantaged" North American crudes. Advantaged crudes are competitively priced because they are stranded, with no pipeline access, and must be delivered by rail. Advantaged crudes include tar sands and Bakken crudes, the latter of which the RDEIR states it will not be importing.[76] According to Phillips 66's website, the challenge for refineries like Phillips 66 is getting the advantaged crude oil to the refineries that are equipped to process it.[77] Phillips 66's Chief Executive Officer Greg Garland states that the company is "looking at pipe, rail, truck, barge and ship – just about any way . . . [it] can get advantaged crude to the front end of the refineries."[78]

According to Phillips 66, until new pipelines projects come online, the easiest and most cost efficient way to get advantaged crude to some of Phillips 66's refineries is by rail.[79] Jay Clemens, manager of Business Development for Phillips 66 and the leader of the advantaged crude strategy team states that the company's refineries are not currently setup to take delivery of large volumes of crude oil from trains, "so we're looking at building rail offloading facilities at several refineries."[80] According to Phillips 66, the next challenge is identifying strategies to get more advantaged crude oil to its California refineries.[81] Mr. Clemens states "California refineries are capable of running a wide range of crude oils which creates opportunities throughout North America to supply California if we can find a cost effective mode of transportation."[82]

ABJC-06 cont

Finally, a change in crude is reasonably foreseeable here because it is clearly in Phillips 66's financial interest. According to Phillips 66, "[t]he single biggest lever . . . [Phillips 66 has] to improve value in ... [its] refining business is through lowering . . . feedstock costs. A savings of $1 per barrel . . . is worth about $450

---

[76] RDEIR, p. 1-4, 2-1.
[77] Phillips 66, *Phillips 66 Delivers Advantaged Crude Strategy*, *available at* http://www.phillips66.com/EN/newsroom/feature-stories/Pages/AdvantagedCrude.aspx (last accessed Nov. 17, 2014), attached as **Attachment 3**.
[78] *Id.*
[79] *Id.*
[80] *Id.*
[81] *Id.*
[82] *Id.*

million of net income . . ."[83] Advantaged crude oil sells at a discount relative to crude oils tied to the global benchmark, North Sea crude. Canadian tar sands crudes have been identified as the most competitively priced crudes to import into California by rail.[84]

The reasonably foreseeable crude switch from local heavy crudes to Canadian tar sands crudes is significant in that it will change the scope and nature of the Project's environmental impacts. The composition of crude slate determines a project's impacts on air quality, odors, public health and hazards and is relevant to processing, as well as transporting and unloading the crude. The chemical composition of crude also determines its corrosive qualities, increasing the chance of accidental release and catastrophic events. Cost advantaged crudes in particular have been linked with such events, as demonstrated by the August 2012 catastrophic fire at the Chevron Richmond Refinery. The County is required to disclose the full extent of any change in feedstock at the SMR that is a reasonably foreseeable result of the Project. The County is also required to analyze the environmental consequences of that change. ABJC-06 cont

C. The RDEIR Fails to Provide a Complete Description of Decommissioning Phase

A complete project description must also include details as to the "later phases of the project, and any secondary, support, or off-site features necessary for its implementation."[85] The requirements of CEQA cannot be avoided by chopping a large project into many small parts or by excluding reasonably foreseeable future activities that may become part of the project.[86] An EIR must supply enough information so that the decision makers and the public can fully understand the scope of the Project.[87] The County, as the lead agency, must fully analyze the whole of a project in a single environmental review document. ABJC-07

---

[83] *Id.*
[84] *See* Valero, UBS Global Oil and Gas Conference (May 21-22, 2013) at p.10, *available at* http://www.valero.com/InvestorRelations/Pages/EventsPresentations.aspx.
[85] *Bozung v. Local Agency Formation Com.* (1975), 13 Cal.3d 263, 283-84.
[86] Pub. Resources Code § 21159.27 (prohibiting piecemealing); *see also, Rio Vista Farm Bureau Center v. County of Solano,* 5 Cal.App.4th 351, 370 (1992).
[87] *Dry Creek Citizens Coalition v. County of Tulare,* 70 Cal.App.4th 20, 26 (1999).

Here, the RDEIR fails to describe the full scope of the Project being approved, and thus fails to disclose the full range and severity of the Project's environmental impacts. In this case, the Project has three distinct phases: construction, operation/maintenance and decommissioning. The decommissioning phase would consist of dismantling and repurposing, salvaging/recycling, or disposing of the Project equipment, and revegetation on the approximately 47 disturbed acres of Project site.[88] These decommissioning activities are a part of the "whole of the project," and as a matter of common sense they will result in environmental impacts to air quality, biological resources, water and other resources. The RDEIR, however, fails to adequately investigate and mitigate these potentially significant impacts.

The public and decision makers are provided with a one-sentence assessment that "[a]t the end of the life of the SMR, the County of San Luis Obispo would undertake an environmental review of the decommissioning and abandonment of the entire refinery complex, including the rail spur."[89] The RDEIR also ambiguously states that "[t]he SMR rail project is expected to operate for the remaining life of the SMR, which could be another 20 or 30 years, *if not longer*."[90] The RDEIR provides no additional analysis regarding decommissioning or the timeline of the Project. It is unlawful for the RDEIR to provide only generalized evaluation of decommissioning impacts in a project-level CEQA review. ABJC-07 cont

Without suitable details and impact analysis, enforceable mitigation measures are precluded and the decommissioning could result in significant unmitigated impacts. The inaccurate and cursory depiction of the decommissioning activities results in an illegal minimization of the entire Project's environmental impacts in contravention of CEQA. The information, or rather lack thereof, is inexorably linked to the adequacy of the RDEIR's analysis of the Project's environmental effects. The mistake in the Project description is compounded throughout the RDEIR because many resource areas in the RDEIR's analyses (e.g., air, biological resources) rely on inaccurate assumptions.[91] The failure to provide an adequate description of the decommission activities thwarts the RDEIR's

---

[88] RDEIR, p. 2-36, 4.13-30.
[89] *Id.*, at 2-36.
[90] *Id.*
[91] *See Laurel Heights Improvement Association v. Regents of University of California* (1988) 47 Cal.3d 376 [EIR failed to describe or analyze project accurately].

environmental analysis because, as this comment letter will show, the RDEIR does not properly evaluate significant impacts in several resource areas.

The shifting and ambiguous duration and timing of the decommissioning further frustrates an "accurate, stable, and finite description" which, as highlighted, is as an indispensible prerequisite to an informative and legally sufficient RDEIR.[92] The public and decision makers are left in the dark as to the specific impacts of decommissioning and are thus unable to fully assess the whole of the Project. ABJC-07 cont

III. THE RDEIR FAILS TO ADEQUATELY ANALYZE AND MITIGATE POTENTIALLY SIGNIFICANT IMPACTS

CEQA has two basic purposes, neither of which the RDEIR satisfies. First, CEQA is designed to inform decision makers and the public about the potential, significant environmental effects of a project.[93] CEQA requires that an agency analyze potentially significant environmental impacts in an EIR.[94] The EIR should not rely on scientifically outdated information to assess the significance of impacts, and should result from "extensive research and information gathering," including consultation with state and federal agencies, local officials, and the interested public.[95] To be adequate, the EIR should evidence the lead agency's good faith effort at full disclosure.[96] Its purpose is to inform the public and responsible officials of the environmental consequences of their decisions before they are made. For this reason, the EIR has been described as "an environmental 'alarm bell' whose purpose it is to alert the public and its responsible officials to environmental changes before they have reached ecological points of no return.[97] Thus, the EIR protects not only the environment but also informed self-government."[98] ABJC-08

Second, CEQA directs public agencies to avoid or reduce environmental damage when possible by requiring alternatives or mitigation measures.[99] The EIR

---

[92] *San Joaquin Raptor/Wildlife Rescue Ctr. v. County of Stanislaus* (1994), 27 Cal. 4th 713, 730 32 Cal.Rptr.2nd 704.
[93] CEQA Guidelines § 15002(a)(1).
[94] *See* Pub. Resources Code § 21000; CEQA Guidelines § 15002.
[95] *Berkeley Keep Jets Over the Bay Comm. v. Board of Port Comm.* (2001) 91 Cal. App.4th 1344, 1367 and Schaeffer *Land Trust v. San Jose City Council*, 215 Cal.App.3d 612, 620.
[96] CEQA Guidelines § 15151; *see also Laurel Heights I* (1998) 47 Cal.3d 376, 406.
[97] *County of Inyo v. Yorty* (1973) 32 Cal.App.3d 795, 810.
[98] *Citizens of Goleta Valley v. Bd. of Supervisors* (1990) 52 Cal.3d 553, 564 (citations omitted).
[99] CEQA Guidelines § 15002(a)(2)-(3); *Berkeley Keep Jets Over the Bay Com.,* 91 Cal.App.4th at 1354.

serves to provide public agencies and the public in general with information about the effect that a proposed project is likely to have on the environment and to "identify ways that environmental damage can be avoided or significantly reduced."[100] If a project has a significant effect on the environment, the agency may approve the project only upon a finding that it has "eliminated or substantially lessened all significant effects on the environment where feasible," and that any unavoidable significant effects on the environment are "acceptable due to overriding concerns" specified in CEQA section 21081.[101] An EIR may conclude that impacts are insignificant only after providing an adequate analysis of the magnitude of the impacts and the degree to which they will be mitigated. Thus, if the lead agency, here the County, fails to investigate a potential impact, its findings simply will not withstand legal scrutiny.[102]

The RDEIR fails to provide substantial evidence to support its conclusions regarding the Project's significant impacts. The RDEIR also fails to propose feasible measures to reduce significant impacts. As a result, the RDEIR fails to inform decision makers and the public of the Project's potentially significant environmental effects and to reduce damage to the environment before they occur. ABJC-08 cont

In the following sections, we address the RDEIR's analysis of the Project's environmental impacts to various resource areas. Accordingly, the following comments analyze the potentially significant impacts that would result from the Rail Spur Project alone. The potentially significant impacts discussed here would be more severe if all Project components – the Rail Spur Extension Project, the Throughput Increase Project, the Propane Recovery Project, the equipment changes necessary to allow the SMR to process any new crudes, etc. – were analyzed together.

A. The RDEIR Fails to Adequately Analyze Impacts to Air Quality

The RDEIR's analyses of the Project's impacts with respect to air quality is substantially flawed because it underestimates daily emissions from locomotives and associated health risks, and underestimates additional health risks. ABJC-09

[100] CEQA Guidelines § 15002(a)(2).
[101] CEQA Guidelines § 15092(b)(2)(A)-(B).
[102] Pub. Res. Code § 21081.6(b); Guidelines § 15126.4(a)(2).

1. *The RDEIR Underestimates Daily Locomotive Emissions and Associated Health Risks*

The RDEIR estimates daily locomotive emissions assuming that only one unit train would complete a roundtrip from the California border to SMR on any given day.[103] As demonstrated by Dr. Pless, this assumption "substantially underestimates peak daily emissions which would occur when several trains are in transit to the SMR for unloading or traveling back empty from the SMR to the California border."[104] Furthermore, the RDEIR assumes that only one train would be moved by switching engines and only one non-switching engine would be idling on site on any given day.[105] According to Dr. Pless, these assumptions also significantly underestimate peak daily emissions "because they ignore the possibility that up to three trains could be in various stages of unloading or waiting to unload at the SMR unloading facility requiring more than the two assumed switching engines and resulting in more than one non-switching engine idling on any given day."[106] ABJC-09 cont

Dr. Pless calculates revised peak daily emission estimates for locomotives traveling within California conservatively, assuming that three trains would be traveling simultaneously through San Luis Obispo County, four switching engines would be operating on site, and two non-switching engines would idle on site.[107] Dr. Pless demonstrates that the RDEIR "substantially underestimated peak daily locomotive exhaust emissions of NOx and PM2.5."[108] Dr. Pless further states that the County must include as a permit condition a limit of only 250 unit trains that would deliver crude to the SMR annually, because the annual emissions rely on this assumption.[109]

2. *The RDEIR's Health Risk Assessment Substantially Underestimates Cancer and Non-cancer Risks*

---

[103] *See* RDEIR, p. 4.3-43, and Appendix B, pp. B-9 and B-10.
[104] Pless Comments, p. 29.
[105] *See* Revised Draft EIR, p. 4.3-43, and Appendix B, pp. B-9 and B-10.
[106] Pless Comments, p. 29.
[107] *Id.*, at 29.
[108] *Id.*, at 30.
[109] *Id.*

The RDEIR presents a health risk assessment for two different scenarios, the results of which "substantially underestimate health risks" because they rely on the permitted throughput limit rather than the existing throughput, according the Dr. Pless.[110] The RDEIR also fails to account for more than one train traveling within San Luis Obispo County and two switching engines operating and one non-switching engine idling on site. Furthermore, the health risk assessment is based on annual emissions averaged on a per-second basis.[111] However, as Dr. Pless points out, receptors do not breathe annual average concentrations, "but rather instantaneous emissions of pollutants, which are even higher than peak daily emissions."[112] This is of particular concern for diesel particulate matter, a carcinogen whose health risks were substantially underestimated by this approach. Dr. Pless' assessment demonstrates the need for a revised health risk assessment. Thus, the RDEIR's conclusions are not supported by substantial evidence. ABJC-10

B. The RDEIR Fails to Identify and Reduce Potentially Significant Public Health Impacts

The RDEIR fails to identify and address potentially significant health impacts due to Valley Fever. Valley Fever, or coccidioidomycosis (short cocci), is an infectious disease caused by inhaling the spores of *Coccidioides ssp.*,[113] a soil-dwelling fungus. Spores, or arthroconidia, are released into the air when infected soils are disturbed, *e.g.*, by construction activities, agricultural operations, dust storms, or during earthquakes. The disease is endemic (native and common) in the semiarid regions of the southwestern United States. San Luis Obispo County, including the Project site, is located within the established endemic range of Valley Fever and the disease has become an increasing concern for health officials in San Luis Obispo County.[114] ABJC-11

Typical symptoms of Valley Fever include fatigue, fever, cough, headache, shortness of breath, rash, muscle aches, and joint pain. Symptoms of advanced Valley Fever include chronic pneumonia, meningitis, skin lesions, and bone or joint

---

[110] *Id.*, at 30 – 31.
[111] *Id.*
[112] *Id.*
[113] Two species of *Coccidioides* are known to cause Valley Fever: *C. immitis*, which is typically found in California, and *C. posadasii*, which is typically found outside California. *See* Center for Disease Control, Coccidioidomycosis (Valley Fever), Information for Health Professionals; http://www.cdc.gov/fungal/coccidioidomycosis/health-professionals.html.
[114] Pless Comments, p. 36 – 37.

infections. Cases of Valley Fever in San Luis Obispo County have more than doubled over the past few years from 87 reported cases in 2009 to 225 cases in 2011.[115] In 2013, San Luis Obispo County experienced two major outbreaks at construction sites for solar facilities.[116]

Dr. Pless concludes that soil disturbing activities during Project construction would expose workers and nearby residences to Valley Fever infection.[117] Dr. Pless concludes that the risk of infection as a result of Project activities is potentially significant and unmitigated. In particular, Dr. Pless demonstrates in her comments that conventional dust control measures that the RDEIR proposes to incorporate into the Project are not effective at controlling Valley Fever as they largely focus on visible dust.[118]

While dust exposure is one of the primary risk factors for contracting Valley Fever and dust-control measures are an important defense against infection, Dr. Pless notes that visible dust is only an indicator that *Coccidioides ssp.* spores may be airborne in a given area.[119] Spores, whose size is well below the limits of human vision, may be present in air that appears relatively clear and dust free. Such ambient, airborne spores with their low settling rates can remain aloft for long periods and be carried hundreds of kilometers from their point of origin. Dr. Pless concludes that implementation of dust control measures only when visible dust is present will not provide sufficient protection for both site workers and the general public.[120]

ABJC-11 cont

The RDEIR fails to identify the Project's potentially significant public health impacts by excluding from the analysis a discussion of Valley Fever. Substantial evidence in the record shows that the Project will result in potentially significant, unaddressed public health impacts due to increased exposure to Valley Fever. The County should prepare a revised DEIR which discloses this potentially significant impact and proposes measures that could avoid the impact, or reduce the impact to a level of insignificance.

---

[115] *Id.*, at 37 – 38.
[116] *Id.*, at 38.
[117] *Id.*, at 45.
[118] *Id.*, at 41.
[119] *Id.*
[120] *Id.*

C. The RDEIR Fails to Adequately Analyze and Mitigate Impacts to Biological Resources

The RDEIR's analyses of the Project's impacts with respect to biological resources is substantially flawed because wildlife and botanical surveys were not conducted in according with applicable protocols, potentially significant impacts to botanical resources were not properly analyzed, and mitigation for an endangered species is inadequate. ABJC-12

1. *Burrowing Owl*

The burrowing owl is a Species of Special Concern in California.[121] The RDEIR states that "[p]roposed construction and operational activities could result in disturbance and mortality to nesting migratory bird species and overwintering burrowing owl" but that the impacts are less than significant with mitigation.[122] However, Mr. Cashen's review of the RDEIR shows that the County has not provided substantial evidence to support its conclusions regarding the burrowing owl.[123]

ABJC-13

Mr. Cashen notes that ARCADIS, a consultant group that conducted biological studies for the Project, did not actually conduct "protocol surveys," as described in the RDEIR.[124] In fact, Mr. Cashen explains that "the surveys deviated from the California Department of Fish and Wildlife's ("CDFW") burrowing owl survey protocol in several ways."[125] First, the surveys were inappropriately limited to two visits during the breeding season when the CDFW protocol calls for a

---

[121] California Department of Fish and Wildlife, List of California Bird Species of Special Concern (2008), *available at* http://www.dfg.ca.gov/wildlife/nongame/ssc/birds.html; RDEIR, p. 4.8-19.
[122] RDEIR, p. 4.4-41.
[123] *See* Letter from Scott Cashen, to Laura Horton re: Recirculated Draft Environmental Impact Report for the Phillips 66 Company Rail Spur Extension Project and Vertical Coastal Access Project Assessment (hereinafter, "Cashen Comments"), p. 11, **Attachment 2.**
[124] RDEIR, p. 4.4-9; Cashen Comments, p. 10.
[125] Cashen Comments, p. 10.

minimum of three visits and encourages four.[126] Second, the CDFW protocol recommends burrowing owl surveys be conducted "between morning civil twilight and 10:00 AM, or during the two hours before sunset."[127] However, the RDEIR's supporting survey report fails to identify whether the surveys of the Project site were conducted during a time of day conducive to detection of burrowing owls.[128] Third, the CDFW protocol calls for a 150 meter survey area around a project site, but the Project surveys "extended only 45.7 meters into the surrounding buffer zone," according to Mr. Cashen.[129]

Last, Mr. Cashen indicates that burrows providing suitable nest sites for burrowing owls are present on the Project site.[130] The CDFW protocol requires that survey reports used for CEQA documentation include: "[a] detailed map. . . showing locations of all burrowing owls, potential burrows, occupied burrows, areas of concentrated burrows, and burrowing owl sign."[131] The burrowing owl survey report for the RDEIR does not include a map of potential burrows or areas of concentrated burrows.[132] In addition, Mr. Cashen notes that "the survey report fails to provide the surveyors' qualifications; a discussion of how the timing of the survey affected the comprehensiveness and detection probability of burrowing owls; and several of the other components necessary of survey reports that are used for CEQA documentation."[133]

ABJC-13 cont

The RDEIR falsely asserts that it followed the necessary protocol for burrowing owl surveys. The RDEIR also made several fatal errors in its assessment of burrowing owls. Thus, the RDEIR's conclusion that the Project will result in a less than significant impact with mitigation is not supported by substantial evidence.

2. Rare Plants

---

[126] *Id.*; RDEIR, Appendix C.3, p. C.3-6; California Department of Fish and Game. 2012. Staff Report on Burrowing Owl Mitigation. 36 pp, *available at* https://nrm.dfg.ca.gov/FileHandler.ashx?DocumentID=83843. Appendix D, p. 28.
[127] *Id.*; Cashen Comments, p. 10.
[128] *Id.*, at 10 – 11.
[129] *Id.*, at 11.
[130] *Id.*; RDEIR, Appendix C.3-22 and -23.
[131] Cashen Comments, p. 11.
[132] *Id.*
[133] *Id.*

A total of 77 rare plant species are known to occur on the Project site and in the surrounding area.[134] The RDEIR and supporting documents fail to adequately assess and mitigate the Project's impacts on these rare plants in several ways. The qualifications of the plant surveyors from ARCADIS are not consistent with the qualifications identified in CDFW protocols.[135] In addition, the Botanical Assessment supporting the RDEIR suggests that rare plant surveys were conducted in the Project area and in a 100-foot buffer area around the Project; however, Mr. Cashen notes that neither the RDEIR nor the Botanical Assessment quantify the survey area.[136] Based on information that was provided in the RDEIR, Mr. Cashen found that the level of effort in the rare plant surveys "was grossly insufficient to detect all potentially occurring rare plant species, especially because some of the target species are very cryptic and diminutive."[137]

ABJC-14 cont

Furthermore, ARCADIS failed to conduct an appropriate number of visits "to capture the floristic diversity and potential rare plant species of the Project site, particularly for species with limited blooming periods."[138] Indeed, Mr. Cashen found that "ARCADIS's surveys failed to account for potentially occurring rare plant species that have peak blooming periods during the months of May and August," including federal- or state-listed endangered species and other special status species.[139] CDFW protocol dictate that botanical surveys should be conducted in the field at the time of year when species are both evident and identifiable, typically during flowering or fruiting, with visits spaced throughout the growing season to accurately determine all plant species that exist within a given project area.[140] According to Mr. Cashen, "when special-status plants are known to occur in the type(s) of habitat present in the project area, [reference sites] should be used to determine whether those species are identifiable at the time of the survey. . ."[141]

---

[134] *Id.*, at 3 (citing California Native Plant Society (CNPS). 2014. *Inventory of Rare and Endangered Plants* (online edition). California Native Plant Society. Sacramento, CA. Accessed from http://rareplants.cnps.org/).
[135] Cashen Comments, p. 2; California Department of Fish and Game. 2009. Protocols for Surveying and Evaluating Impacts to Special Status Native Plant Populations and Natural communities. Wildlife and Habitat Data Analysis Branch.
[136] Cashen Comments, p. 2; RDEIR, Appendix C.1, p. C.1-8.
[137] Cashen Comments, p. 2.
[138] *Id.*, at 3.
[139] *Id.* (citing Jepson Flora Project (JFP). 2014 (v. 1.0). Jepson eFlora, http://ucjeps.berkeley.edu/IJM.html).
[140] *Id.*, at 4.
[141] *Id.* (citing CDFG. 2009. Protocols for Surveying and Evaluating Impacts to Special Status Native Plant Populations and Natural Communities. p. 4).

Because ARCADIS personnel did not check reference populations for any species other than NML, Mr. Cashen states that there is no way of knowing whether the target species were evident and identifiable at the time of ARCADIS's.[142] The severe drought in California also casts doubt on these surveys, as "it is very likely that some species did not even germinate in 2012 or 2013."[143]

Consequently, Mr. Cashen concludes that "full floristic (protocol level) rare plant surveys of the Project area need to be conducted by qualified botanists after those botanists have visited reference sites to confirm the target species are evident and identifiable."[144] Moreover, the County's conclusions that rule out the presence of other CNPS List 1B species, or the presence of one or more state or federally listed species, cannot be supported by substantial evidence.[145] As a result, the RDEIR fails as an informational document under CEQA. ABJC-14 cont

The RDEIR also fails to adequately mitigate impacts to the highly endangered Nipomo Mesa Lupine ("NML"). The RDEIR states that "[p]roposed construction of the Rail Spur Project has the potential to impact NML, a state and federally listed plant species."[146] In addition, the RDEIR provides mitigation for the NML that require a survey and states, in part, "[i]f the results of this survey effort determine that Nipomo Mesa lupine is absent from the Disturbance Area, no further mitigation for this species shall be required."[147] The RDEIR further states that if NML is found on site, "the [A]pplicant shall coordinate with the County and CDFW to acquire a 2081 Incidental Take Permit for this species and comply with any conditions imposed by that permit."[148] This is insufficient mitigation for the NML, or any endangered species. ABJC-15

Mitigation for the NML should clearly state what a normal rainfall year is by inches of precipitation to remove any ambiguity regarding the trigger for the pre-construction surveys of NML.[149] In addition, Mr. Cashen states that post-construction surveys for NML should be conducted.[150] The measure also fails to

---

[142] *Id.*
[143] *Id.*
[144] *Id.*
[145] *Id.*, at 5.
[146] RDEIR, p. 4.4-25.
[147] *Id.*, at 4.4-28.
[148] *Id.*
[149] Cashen Comments, p. 9.
[150] *Id.*, at 10.

protect NML based on results of the pre-construction surveys "of an unknown quality."[151] Mr. Cashen concludes that the measure indentified in the RDEIR fails to adequately mitigate impacts to NML and that compensatory mitigation for should be required.[152] Thus, as currently written, mitigation measure BIO-1 fails to withstand legal scrutiny under CEQA.

According to Mr. Cashen, the RDEIR's discussion of the sensitive plant species lacks the level of specificity needed to determine if Project impacts would be significant, rendering the RDEIR deficient as an informational document.[153] The RDEIR does not provide any details regarding the "specific location, spatial distribution, or abundance" of rare plants within the Project site and regionally.[154] It also fails to provide detailed analysis of direct, indirect, or cumulative impacts for any sensitive botanical resources other than Nipomo Mesa lupine, as well as any adequate mitigation for other species. Even where the RDEIR does provide mitigation for NML, the mitigation does not withstand legal scrutiny under CEQA.[155] ABJC-15 cont

3. Hazards

The RDEIR also fails to adequately assess the Project's impacts on biological resources from exposure to hazardous materials following spills and accidents. The RDEIR states that "[t]he proposed rail spur unloading facility would increase the risk of an oil spill, fires and explosions at the refinery and on the project site that could impact the public."[156] It further states that "[c]rude oil is processed and then stored in tanks that could spill and ignite, creating thermal radiation impacts. Thermal radiation impacts from crude oil tank fires could cause injury 220 feet away."[157] It provides a worst-case thermal radiation zone in Figure 4.7-4, which encompasses several of the sensitive habitat areas described in Figure 4.4-3.[158] ABJC-16

Although the RDEIR assesses potential impacts on humans from fires and explosions, the RDEIR fails to adequately assess potential impacts on biological

[151] *Id.*
[152] *Id.*
[153] *Id.*, at 5.
[154] *Id.*, at 9.
[155] *See id.*
[156] RDEIR, p. 4.7-41.
[157] *Id.*, at 4.7-15.
[158] *Id.*, at 4.7-44, 4.4-23.

resources, even though it acknowledges the potential for such impacts.[159] For example, the RDEIR explains that "[b]ased on CNDDB records, the nearest known occurrence of this species is located adjacent to existing tank facilities."[160] The RDEIR further states that for "highly localized species such as [NML], a federally endangered species, there is a potential that the entire population could be permanently lost or severely damaged in a catastrophic event." However, the RDEIR does not assess the potential for NML impacts from thermal radiation. Clearly, the RDEIR is incomplete and its conclusions regarding impacts on biological resources from hazardous materials are not supported by substantial evidence.

The RDEIR addresses potential *oil spill impacts* on biological resources and acknowledges that impacts to sensitive habitats would increase since "the Rail Spur project would be located in close proximity to coastal scrub habitat."[161] However, the RDEIR merely offers an amendment to the existing SMR Spill Prevention, Control and Countermeasure Plan as mitigation, and only addresses the potential for an oil spill, not thermal radiation that could occur as a result of that spill being ignited.[162] ABJC-16 cont

Furthermore, the RDEIR acknowledges crude oil spill risk along the UPRR mainline that could impact sensitive plant, wildlife, and wetlands.[163] However, the county undermines its own attempt to mitigate those impacts through federal oil spill law by stating "[g]iven the uncertain timing of these rules and that the County may be preempted from implementing mitigation measures for the mainline rail oil spills impacts to biological resources along the UPRR mainline tracks could be significant and unavoidable. . . depending upon the location of the spill."[164] The issue of federal preemption is discussed further below.

The Project is sited among sensitive coastal areas and habitats, as well as protected plants and wildlife. The RDEIR fails in several respects in its assessment of impacts to these biological resources, including failing to meet survey protocols and failing to provide adequate assessment and mitigation of significant impacts.

---

[159] *See* Cashen Comments.
[160] RDEIR, p. 4.4-44; 4.4-25.
[161] *Id.*, at 4.4-21.
[162] *Id.*, at 4.4-39.
[163] *Id.*, at 4.4-44.
[164] *Id.*, at 4.4-48.

Thus, the RDEIR must be revised to address these defects; otherwise, its conclusions are not supported by substantial evidence. ABJC-16 cont

D. The Hazards Impacts Analysis Section in the RDEIR is Inadequate

The CEQA Guidelines define the term "significant effect on the environment" as "a substantial, or potentially substantial, adverse change in any of the physical conditions within the area affected by the project including land, air, water, minerals, flora, fauna, ambient noise, and objects of historic and aesthetic significance."[165] It is established that the scope of the lead agency's environmental impact analysis under CEQA must include impacts resulting from proposed industrial process changes, including any changes that are reasonably foreseeable from the proposed project.

In *Communities for a Better Environment v. South Coast Air Quality Management District*, the California Supreme Court considered ConocoPhillips' proposal to produce ultra low sulfur diesel fuel at its refinery in Wilmington, Los Angeles.[166] The project would require the increased operation of a cogeneration plant and boilers, resulting in increased emissions of air pollutants. The Court held that any such increase must be evaluated under CEQA, even though Chevron did not require the Air District's approval to increase facility operations.[167] Similarly here, the County was required to analyze the potential hazards of transitioning the SMR to refining Canadian tar sands crudes. The RDEIR is inadequate because it fails to include this analysis. ABJC-17

Crude oil shipments by rail have increased in recent years with the development of oil fields in North Dakota and Canada.[168] In the past year, rail transport of crude oil has been involved in many derailments or major explosions, causing damage, prolonged emission of air contaminants, and, in some cases, severe injuries, fatalities, and environmental damage.[169] In July 2013, an oil-train

---

[165] CEQA Guidelines, § 15382.
[166] (2010) 48 Cal.4th 310, 318.
[167] *See id.* at pp. 327-28.
[168] CRS Report R43401, Anthony Andrews, *Crude Oil Properties Relevant to Rail Transport Safety: In Brief* (Feb. 2014).
[169] *See* Adrian Glass-Moore, *Two trains involved in derailment near Casselton*, Forum News Service (Nov. 14, 2014), attached as **Attachment 4**; Russell Gold & Lynn Cook, *Cities Grapple With Oil-Train Safety*, Wall Street Journal, Vo. CCLXIII NO.12, Jan. 15, 2014, attached as **Attachment 5**;

derailment and ensuing explosion and fire in Lac-Mégantic, Quebec left 47 people dead. Similar accidents occurred in Alabama and North Dakota and New Brunswick, Ottawa.

Despite the clearly heightened hazardous risks, the RDEIR asserts that the Project will result in less than significant impacts from accidents and spills. However, it does not provide substantial evidence to support its conclusions. The RDEIR does not require Phillips 66 to incorporate mitigation measures into the Project even though substantial evidence shows that the Project will, contrary to the RDEIR, likely result in potentially significant, and potentially catastrophic, impacts.[170]

Furthermore, the RDEIR and the supporting analyses do not at all address fire and explosion risk from the crude storage tanks. Instead, the RDEIR merely states that "[t]he unloaded crude oil would be stored in the existing refinery storage tanks. Therefore, crude oil storage would not result in any increase in fire and explosion risk at the refinery."[171] Accordingly, the RDEIR's conclusion that unloading and storing the crude oil in storage tanks will not result in potentially significant impacts lacks basis. ABJC-17 cont

In addition, the hazards analysis is deficient because the RDEIR declines to identify and address risks to workers stating,

> Occupational risk, which is governed by state and federal OSHAs is considered to be more voluntary and is generally judged according to more lenient standards of significance than those used for involuntary exposure.[172]

Accordingly, the RDEIR does not identify a significance threshold for worker impacts and does not identify or assess potential risks to workers as a result of the Project. These omissions render the RDEIR inadequate.

Steve Almasy, *North Dakota train collision ignites oil cars; fire to burn out*, CNN US, Dec. 30, 2013, attached as **Attachment 6**; *Evacuation lifted for Casselton, ND following fiery train derailment*, Fox News (Dec. 31, 2013), attached as **Attachment 7**; Michael Laris & Peter Hermann, *Train derails in downtown Lynchburg, leaving crude burning on James River*, Washington Post (April 30, 2014), attached as **Attachment 8.**

[170] *Id.*, at 4.7-43; *see* Pless Comments, Exhibit 1.

[171] *Id.*, at 4.7-42.

[172] RDEIR at p. 4.7-38.

The County is required to identify the Project's possible significant environmental impacts in the RDEIR. The County should prepare another revised DEIR which identifies and analyzes workers impacts, and proposes mitigation measures to reduce impacts to a less than significant level. ABJC-17 cont

IV. MITIGATION MEASURES PROPOSED IN THE RDEIR ARE INADEQUATE

In enacting CEQA, the Legislature declared that it is "the policy of the state that public agencies should not approve projects as proposed if there are feasible alternatives or feasible mitigation measures available which would substantially lessen the significant environmental effects of such projects."[173] An EIR is inadequate unless it includes "a detailed statement setting forth . . . mitigation measures proposed to minimize [the project's] significant effects on the environment."[174] CEQA requires lead agencies to incorporate all feasible mitigation measures into a project to reduce the project's potentially significant impacts to a level of insignificance.[175] Finally, CEQA requires the lead agency to find, based on substantial evidence, "that the mitigation measures are required in or incorporated into the project; or that the measures are the responsibility of another agency and have been, or can and should be, adopted by the other agency."[176] ABJC-18

Courts have also imposed several parameters for the adequacy of mitigation measures. We address some of the relevant criteria here. First, the lead agency may not defer the formulation of mitigation measures until a future time, unless the EIR also specifies the specific performance standards capable of mitigating the project's impacts to a less than significant level.[177] Deferral is impermissible where an agency "simply requires a project applicant to obtain a . . . report and then comply with any recommendations that may be made in the report."[178] Second, a public agency may not rely on mitigation measures of uncertain efficacy or

---

[173] Pub. Resources Code § 21002.
[174] Pub. Resources Code § 21100(b)(3); CEQA Guidelines §§ 15126(e).
[175] *See* Pub. Resources Code § 21081(a)(1)-(3); CEQA Guidelines §§ 15002(a)(3), 15021(a)(2), 15091(a)(1).
[176] *Federation of Hillside & Canyon Associations v. City of Los Angeles* (2000) 83 Cal.App.4th 1252, 1260 (internal quotations omitted).
[177] CEQA Guidelines, § 15126.4(a)(1)(B); *Endangered Habitats League v. County of Orange* (2005) 131 Cal.App.4th 777, 793-94; *Defend the Bay v. City of Irvine* (2004) 119 Cal.App.4th 1261, 1275.
[178] *Defend the Bay v. City of Irvine* (2004) 119 Cal.App.4th 1261, 1275.

feasibility.[179] Third, "[m]itigation measures must be fully enforceable through permit conditions, agreements, or other legally binding instruments."[180] Fourth, mitigation measures that are vague or so undefined that it is impossible to evaluate their effectiveness are legally inadequate.[181]

As explained in the following paragraphs, the RDEIR fails to incorporate feasible mitigation measure into the Project. The RDEIR also impermissibly defers the formulation of mitigation measures for the Project's potentially significant impacts. Other measures proposed in the RDEIR fail to meet CEQA's requirements and should be revised consistent with these comments. Furthermore, Dr. Pless demonstrates that the mitigation measures for air quality impacts are not stringent enough. She recommends that the County require additional on-site emission reductions, BACT, and other measures. ABJC-18 cont

A. Use of Tier 4 Locomotives and Emission Credits are Feasible Mitigation Measures and the County is Required to Incorporate Them Into the Project

The RDEIR states that "the emissions from the rail spur and associated importation of crude oil by rail would exceed the SLOAPCD [San Luis Obispo County Air Pollution Control District] thresholds for operations" for Reactive Organic Gases ("ROGs") and Nitrogen Oxides ("NOx"), as well as DPM.[182] The RDEIR further finds "operational activities of trains along the mainline rail route outside of [the County] associated with the Rail Spur Project would generate criteria pollutant emissions that exceed thresholds."[183] The RDEIR concludes that with the implementation of mitigation measures AQ-2 and AQ-3, which both require the use of Tier 4 locomotive, and the application of ROG + NO_x and DPM onsite and offsite reductions, impacts would be less than significant with mitigation. However, there are two problems with the analysis in the RDEIR. ABJC-19

[179] *Kings County Farm Bureau v. City of Hanford* (1990) 221 Cal.App.3d 692, 727 (finding groundwater purchase agreement inadequate mitigation measure because no record evidence existed that replacement water was available).
[180] CEQA Guidelines § 15126.4(a)(2).
[181] *San Franciscans for Reasonable Growth v. City & County of San Francisco* (1984) 151 Cal.App.3d 61,79.
[182] RDEIR, p. 4.3-46.
[183] *Id.*, at 4.3-50.

1. Emission Credits

First, the RDEIR does not appear to fully incorporate the use of emission credits into the mitigation measures. Mitigation measure AQ-2a merely states that the Applicant "shall investigate methods for reducing the onsite and offsite emissions," which fails to explicitly require emission reduction credits and which is also an impermissible deferral of mitigation (discussed below).[184] It appears the RDEIR anticipates the use of emission reduction credits as one of the potential emission reduction methods, stating:

> Use of Tier 4 engines for the locomotives and limiting idling time at the refinery to no more than 15 consecutive minutes reduces the annual ROG+NOx and DPM emissions. Even with this mitigation ROG+NOx and DPM emissions would remain significant for the peak day emissions. Even with these emission reductions the Applicant would still need to provide emission reduction credits for ROG+NOx and DPM. With the implementation of the mitigation measures including the application of ROG + NOx and DPM emission reduction credits, impacts for criteria pollutants would be reduced to less than significant.[185]

ABJC-20

However, the issue of emissions credits is confused by several additional statements found throughout the air quality analysis, such as: "[i]t is possible that contractually, the Applicant could require the use of lower emission locomotives such as Tier 4 locomotives. Otherwise, SLOCAPCD approved emission reduction credits would be required." Thus, it appears that the County would only require emissions reduction credits if the Applicant is unable to use Tier 4 locomotives.[186] Also, the RDEIR states that "[i]f the use of only Tier 4 locomotives cannot be implemented, then the Applicant would have to provide a larger amount of emission reduction credits for ROG+NOx and DPM."[187] And finally, the RDEIR states:

> [m]itigation measures AQ-2a through AQ-2c require the Applicant to reduce ROG+NOx and DPM emissions through the use of Tier 4 engines and reduced idling. Any remaining ROG+NOx and particulate

[184] *Id.*, at 4.3-47.
[185] *Id.*, at 4.3-48.
[186] *Id.*, at 4.3-46.
[187] *Id.*, at 4.3-49.

> matter emission would be mitigated by either onsite or offsite emissions credits.[188]

The last sentence is unclear, not only because it considers the use of emissions credits as mitigation when AQ-2 did not explicitly include it, but also because there is no mitigation measure AQ-2c.[189] Thus, the RDEIR is unclear as to whether emissions credits are in fact required under the mitigation measures, or if they are merely a "back-up" option if the Tier 4 locomotives cannot be implemented due to preemption, discussed below.

ABJC-20 cont

Mitigation measure AQ-6 explicitly states that "[p]rior to issuance of the Notice to Proceed, the Applicant *shall provide* GHG emission reduction credits for all of the project GHG emissions for the life of the project."[190] The RDEIR does not provide adequate reasoning why the other measures cannot include the same enforceable language. The County is required to incorporate all feasible mitigation measures into the RDEIR, which includes the use of emission reduction credits. The RDEIR should be revised to clarify this point. Otherwise, the RDEIR fails to incorporate feasible mitigation to reduce significant impacts.

2. *Federal Preemption*

The second problem with several mitigation measures including AQ-2 and AQ-3 is the issue of federal preemption. The RDEIR states that the County could be preempted by Federal law from mitigating rail emissions outside of the SMR and, therefore, may not have the authority to require offsite emissions reductions for the Union Pacific mainline emissions within the County.[191] The RDEIR refers to the Interstate Commerce Commission Termination Act of 1995 ("ICCTA") as the potential source of preemption.[192] The ICCTA grants the Surface Transportation Board ("STB") exclusive jurisdiction over interstate transportation by rail carrier and facilities that are an integral part of the railroad's interstate operations.[193] The STB lacks jurisdiction over activities proposed on non-railroad owned land and

ABJC-21

---

[188] *Id.*, at 4.3-73.
[189] *Id.*, at 4.3-47 – 48.
[190] *Id.*, at 4.3-71 (emphasis added).
[191] *Id.*, at 4.3-48.
[192] *Id.*, at ES-6.
[193] *See* 49 U.S.C. § 10501(b); *Kawasaki Kisen Kaisha Ltd. v. Regal-Beloit Corp.* (2010) 561 U.S. 89; *Flynn v. Burlington Northern Santa Fe Corp.*, (2000) 98 F.Supp.2d 1186, 1189.

railroad activities that are not integral to a railroad's interstate operations, such as manufacturing facilities and truck transfer facilities.[194]

Even where the STB has jurisdiction, state and local regulation is not preempted where the regulation carries the force of federal law, such as a state regulation promulgated pursuant to the Clean Air Act or the Clean Water Act and which was approved by the EPA.[195] State and local regulations are also not preempted where the regulation is one of general application, having a remote or incidental effect on rail transportation, and does not unreasonably burden rail transportation.[196] Whether a state or local regulation unreasonably burdens interstate commerce is a question of fact.[197] "The ICCTA preempts all state laws that may reasonably be said to have the effect of managing or governing rail transportation, while permitting the continued application of laws having a more remote or incidental effect on rail transportation. What matters is the degree to which the challenged regulation burdens rail transportation . . . ."[198] ABJC-21 cont

ICCTA's preemption of CEQA was recently visited in the First Circuit appellate court in *Friends of the Eel River v. North Coast Railroad Authority*. In *Friends of the Eel River*, the court found a condition on a contract between the North Coast Railroad Authority ("NCRA"), a public agency, and Northwestern Pacific Railroad Company ("NWPRC"), requiring the agency's completion of CEQA before a rail project could be funded was preempted by ICCTA. The court found that requiring the NCRA to complete a CEQA review "may reasonably be said to have the effect of managing or governing rail transportation."[199] However, the project in that case involved the reopening of a new line, including upgrades and repairs, solely to benefit rail travel with NWPRC intended as the line operator.

Here, Phillips 66 proposes to construct a rail spur extension, rail car unloading facilities and related structures wholly within the Santa Maria Refinery, at the terminus of an existing rail spur. The Project is intended solely to benefit Phillips 66's business and refinery operations. Although the RDEIR states that

---

[194] *See Nicholson v. I.C.C.* 711 F.2d 364, 367-68 (D.C. Cir. 1983).
[195] *Association of American Railroads v. South Coast Air Quality Management District* (9th Cir. 2010) 622 F.3d 1094, 1098; *Flynn*, *supra*, 98 F.Supp.2d at 1189.
[196] *Association of American Railroads*, *supra*, 622 F.3d 1094 at 1097.
[197] *See id.*
[198] *Id.* at 1097 (internal quotations omitted).
[199] *Friends of the Eel River v. North Coast Railroad Authority* (2014), 2014 WL 4809456, *9.

"[t]he operation of unit and manifest trains to and from the SMR would be performed by Union Pacific Railroad ("UPRR"), on UPRR property, and on trains operated by UPRR employees," Project operation itself will only involve the offloading and processing of crude oil at the SMR by Phillips 66 and these activities are neither undertaken by Union Pacific, nor are they integral to Union Pacific's interstate operations.[200] In addition, these activities are not subject to STB jurisdiction because they are proposed on land not owned by Union Pacific. The crude that will be offloaded at the Santa Maria Refinery will be processed at the Santa Maria Refinery and no crude would be transported out of the refinery by rail.[201]

The RDEIR emphasizes that preemption would only relate to the County's ability to impose "mitigation measures, conditions or regulations on UPRR train movements *on the mainline*."[202] Still, the RDEIR falls short on measures intended to mitigate Project impacts on the SMR property. For example, as stated above, it is unclear whether emissions credits are fully incorporated into the mitigation for significant air quality impacts. However, the RDEIR states that "[i]f the County is preempted from applying mitigation to the locomotive emissions on the UPRR mainline, the impact would remain significant and unavoidable."[203] It further states that "regardless of the preemption issue, the air emissions within the SMR can be mitigated through the use of emission reduction credits."[204] The RDEIR then states that "[d]ue to the possible preemption by Federal law which could prevent the mitigation measures from being implemented (outside of the SMR facility boundary), emission reduction credits might not be achievable."[205] This statement calls into question the County's "back-up" options if preemption is applicable to this Project.

ABJC-21 cont

Thus, the County's mitigation for the Project in the face of possible preemption is extremely vague. Furthermore, the RDEIR indicates that impacts, such as greenhouse gas ("GHG") emissions, high cancer risks, oil spills, and emergency response will remain significant and unavoidable, if certain mitigation measures are preempted. Without more definitive analysis on preemption and

---

[200] RDEIR, p. 1-8.
[201] *Id.*, at ES-5.
[202] *Id.*, at ES-6.
[203] *Id.*, at ES-9.
[204] *Id.*, at ES-9.
[205] *Id.*, at 4.3-50.

additional mitigation, the RDEIR fails to meet the minimum mitigation requirements under CEQA.[206]

The ICCTA does preempt state and local regulation of emissions from idling trains.[207] But Phillips 66 may enter into a voluntary agreement with Union Pacific to limit locomotive idling and the County is authorized to direct Phillips 66 to endeavor to enter into such an agreement. Voluntary agreements between local jurisdiction and railroads to reduce emissions from trains are feasible and have precedent in California. In fact, Union Pacific is party to a voluntary statewide agreement with the California Air Resources Board which includes an idling-reduction program.[208] The agreement applies to rail yards in California and requires Union Pacific to equip virtually all intrastate locomotives based in California with automatic idling-reduction devices that limit idling to no more than 15 consecutive minutes.[209]

ABJC-21 cont

The County's authority to implement certain mitigation measures intended to reduce emissions both inside and outside of the SMR is likely not federally preempted in this case. The STB does not have jurisdiction over the Project. Moreover, a permit condition requiring Phillips 66 to source feedstock via Tier 4 locomotives does not regulate Union Pacific's interstate operations. State regulation of in-state actors, which may impact contractual arrangements in interstate commerce, does not burden interstate commerce.[210] However, even if certain mitigation for impacts along the mainline are preempted, the County must endeavor to find alternative mitigation that would not fall within the zone of preemption. The County is required to incorporate all feasible mitigation measures into the Project; accordingly, the County is required to incorporate these measures fully into the Project.[211]

---

[206] *Id.*, at ES-9 – 10.
[207] *Association of American Railroads v. South Coast Air Quality Management District* (9th Cir. 2010) 622 F.3d 1094, 1097.
[208] *See* ARB/Railroad Statewide Agreement Particulate Emissions Reductions Program at California Rail Yards, June 2005, *available at* http://www.arb.ca.gov/railyard/ryagreement/083005mouexecuted.pdf. (last accessed Nov. 18, 2014).
[209] *Id.*, at C.1(a)-(b).
[210] *Rocky Mountain Farmers Union v. Corey* (2013 9th Cir.)730 F.3d 1070,1103.
[211] *See* Pub. Resources Code, § 21081 subd. (a)(1)-(3); CEQA Guidelines, §§ 15002 subd. (a)(3), 15021 subd. (a)(2), 15091 subd. (a)(1).

B. Mitigation Measures AQ-2(a), AQ-3, and AQ-8 Impermissibly Defer the Formulation of Mitigation Measures

The lead agency may not defer the formulation of mitigation measures until a future time, unless the EIR also specifies the specific performance standards capable of mitigating the project's impacts to a less than significant level.[212] Deferral is impermissible where an agency "simply requires a project applicant to obtain a . . . report and then comply with any recommendations that may be made in the report."[213] In *CBE v. Richmond*,[214] discussed above, an EIR for a Chevron refinery project was deemed legally inadequate in part because the mitigation measures for GHG emissions were impermissibly deferred. The EIR in that case was "legally required to describe, evaluate and ultimately adopt feasible mitigation measures which would 'mitigate or avoid' [GHG] impacts."[215]

The mitigation measure at issue in the Chevron project EIR stated that "[n]o later than one (1) year after approval of this Conditional Use Permit, Chevron shall submit to the City, for approval by the City Council, a plan for achieving complete reduction of GHG emissions. . ."[216] As the court explained, the mitigation measure "required Chevron, within one year of Project approval, to hire and fully fund 'a qualified independent expert' to complete an inventory of greenhouse gas emissions and to identify potential emissions reduction opportunities."[217] Furthermore, the measures stated that Chevron "shall consider implementation of measures that achieve GHG reductions including, but not limited to, the following measures . . ."[218] The measures then listed several potential mitigation measures. The respondents in the case argued that the EIR failed to adequately formulate a plan to mitigate GHG emissions, but instead offered "a menu of potential mitigation measures, with the specific measures to be selected by Chevron and approved by the City Council a year after Project approval."[219]

ABJC-22

---

[212] CEQA Guidelines, § 15126.4(a)(1)(B); *Endangered Habitats League v. County of Orange* (2005) 131 Cal.App.4th 777, 793-94; *Defend the Bay v. City of Irvine* (2004) 119 Cal.App.4th 1261, 1275.
[213] *Defend the Bay v. City of Irvine* (2004) 119 Cal.App.4th 1261, 1275.
[214] In *Communities for a Better Environment v. City of Richmond* (2010) 184 Cal.App.4th 70, 95.
[215] *Id.*, at 91.
[216] *Id.*
[217] *Id.*, at 92.
[218] *Id.*
[219] *Id.*

The court found this measure to constitute deferred mitigation, which is impermissible under CEQA. The court stated, in part, that the measure amounted to "a generalized goal of no net increase in greenhouse gas emissions and. . . a handful of cursorily described mitigation measures for future."[220] Furthermore, the court found that "[n]o effort [was] made to calculate what, if any, reductions in the Project's anticipated greenhouse gas emissions would result from each of these vaguely described future mitigation measures" and that the list of potential mitigation measures was "nonexclusive, undefined, untested and of unknown efficacy."[221]

Here, mitigation measures AQ-2(a), AQ-3, and AQ-8 similarly defer the formulation of adequate mitigation measures. In relevant part, mitigation measure AQ-2(a) states: "[p]rior to issuance of Notice to Proceed, the Applicant *shall investigate methods for reducing the onsite emissions*, both from fugitive components and from locomotives."[222] Mitigation measure AQ-3 states: "Prior to issuance of the Notice to Proceed, the Applicant *shall investigate methods for reducing the locomotive emissions through contracting arrangements that require the use of Tier 4 locomotives or equivalent emission levels*."[223] Furthermore, Mitigation Measure AQ-8 states:

ABJC-22 cont

> [T]he Applicant *shall investigate methods* to bring the Rail Spur Project GHG emissions at the refinery to zero for the entire project and for the life of the project. If after all onsite mitigations are implemented, the GHG emissions from the Rail Spur Project still exceed zero, then SLOCAPCD approved off-site mitigation will be required. Methods *could* include the contracting arrangement that increases the use of more efficient locomotives, or through other, onsite measures . . .[224]

The court in *CBE v. Richmond* found that similar GHG mitigation "offered no assurance that the plan for how the Project's greenhouse gas emissions would be mitigated to a net-zero standard was both feasible and efficacious, and created no

---

[220] *Id.*, at 93.
[221] *Id.*
[222] RDEIR, p. 4.3-47 (emphasis added).
[223] *Id.*, at 4.3-53. (emphasis added).
[224] *Id.*, at 4.3-74.

objective criteria for measuring success."[225] As currently drafted, all three measures in the RDEIR similarly fail to ensure that the Project's air quality impacts will be reduced to a less than significant level, fail to specify specific performance standards, and are unenforceable. "[T]he time to analyze the impacts of the Project and to formulate mitigation measures to minimize or avoid those impacts was during the EIR process, before the Project was brought to the Planning Commission and City Council for final approval."[226] Thus, the measures should be revised to specify the methods that will be implemented to reduce Project emissions to a less than significant level, and Phillips 66 must be required to incorporate the methods into the Project. ABJC-22 cont

C. Mitigation Measures AQ-2(a), AQ-6, and AQ-8 Preclude a County Finding That the Measure Will Be Incorporated Into the Project

CEQA requires the lead agency to find, based on substantial evidence, "that the mitigation measures are required in or incorporated into the project; or that the measures are the responsibility of another agency and have been, or can and should be, adopted by the other agency."[227] Mitigation measures AQ-2(a) and AQ-8 require Phillips 66 to secure APCD-approved emissions reductions to ensure that operational emissions of ROG + NOx, DPM, and GHG are reduced to a less than significant level.[228] AQ-2(a) provides:

> Coordination with the SLOCAPCD should begin at least six (6) months prior to issuance of the Notice to Proceed for the Project to allow time for . . . SLOCAPCD to review and approve any required ROG+NOx and DPM emission reductions.[229]

ABJC-23

AQ-6 and AQ-8 provide similar language.[230] As drafted, the measures preclude the County from making the required finding that the relevant mitigation will be adopted by the other agency. In particular, the measures do not require the

---

[225] In *Communities for a Better Environment v. City of Richmond* (2010) 184 Cal.App.4th 70, 95.
[226] *Id.*
[227] *See Federation of Hillside & Canyon Associations v. City of Los Angeles* (2000) 83 Cal.App.4th 1252, 1260 (internal quotations omitted).
[228] *See* RDEIR at pp. 4.3-47, 4.3-74.
[229] *Id.*, at 4.3-47.
[230] *Id.*, at 4.3-71, 4.3-74.

APCD's, or the County's Planning and Building Department in the case of AQ-6, approval of mitigation before the County approves the Project. Furthermore, the measures include no enforcement provisions. The measures should be revised to require the APCD and the County Planning and Building Department to approve mitigation prior to Project approval and require implementation of the approved mitigation approach. Absent such requirements, the County lacks the substantial evidence to conclude that mitigation measures AQ-2(a), AQ-6, and AQ-8 can and should be adopted by the APCD and the County Planning and Building Department. In other words, the County has no evidence that the mitigation measures will be feasible, effective and adopted by the responsible agencies. ABJC-23 cont

D. The RDEIR Improperly Treats Mitigation as "Part of the Project"

In *Lotus v. Department of Transportation*, an EIR approved by CalTrans contained several measures "[t]o help minimize potential stress on the redwood trees" during construction of a highway.[231] Although those measures were clearly separate mitigation, the project proponents considered them "part of the project," and the EIR concluded that because of the planned implementation of those measures, no significant impacts were expected.[232] However, the appellate court found that because the EIR had "compress[ed] the analysis of impacts and mitigation measures into a single issue, the EIR disregard[ed] the requirements of CEQA."[233] The Court continued, stating "[a]bsent a determination regarding the significance of the impacts… it is impossible to determine whether mitigation measures are required or to evaluate whether other more effective measures than those proposed should be considered."[234] ABJC-24

Similarly, the RDEIR improperly incorporates two different measures as part of the project, instead of as enforceable mitigation. First, the RDEIR mentions CalOSHA's Management of Feedstock Change Process, as discussed above. The RDEIR states that "[t]he purpose of Management of Feedstock Change is to establish the chemical, physical, and operating process requirements for any feedstock changes" and that through the process, the Applicant would "[i]dentify any potential adverse impacts to overall refinery operations, including

[231] *Lotus,* 223 Cal.App.4th at 650.
[232] *Id.*, at 651.
[233] *Id.*, at 656.
[234] *Id.*

environmental conditions."[235] The RDEIR appears to treat the impacts from a crude change as less than significant because the new crudes would be similar to the old ones, and because this process would be implemented. However, as explained by Dr. Pless, major changes to feedstock is inevitable and significant impacts may occur as a result.[236] After the County analyzes the impacts from the foreseeable change in crude in a revised EIR (discussed above), the County may list the CalOSHA process as an enforceable measure, among other feasible measures, to mitigate impacts from the crude change

Second, the RDEIR incorporates construction of a stormwater detention/percolation basin into the Project to address impacts to water resources from runoff, but does not treat that action as mitigation. In fact, the RDEIR describes several potentially significant impacts to water resources resulting from the Project. Impact WR.4 states that "Project operations would result in an increase in the amount of stormwater runoff at the site."[237] Yet, the RDEIR concludes that the impact is considered less than significant because measures are included in the project description and thus "no mitigation measures are required."[238] The RDEIR states:

ABJC-24 cont

> [A] stormwater detention/percolation basin would be constructed to prevent offsite runoff of increased surface flows from proposed unloading facility canopy. . . [r]unoff would be collected in downspouts constructed around the perimeter of the canopy and then transmitted to the detention/percolation basin, where the runoff would percolate into the permeable sandy soil.

The RDEIR also indicates that the Applicant would need to get authorization under National Pollutant Discharge Elimination System ("NPDES") Waste Discharge Permits from the Regional Water Quality Control Board for the basin.[239] The RDEIR is unclear as to both the role of the stormwater detention/percolation basin in mitigation Impact WR.4 and the potential secondary impacts of basin construction. The RDEIR treats this impact as less than significant based on its

---

[235] RDEIR, p. 2-34.
[236] *See* Pless Comments.
[237] RDEIR, p. 4.13-29.
[238] RDEIR, p. 4.13-29.
[239] *Id.*, at 1-6.

assurances that it will incorporate the stormwater detention/percolation basin into the Project.[240]

The Management of Feedstock Change process and the basin construction are comparable to the risk avoidance measures at issue in *Lotus*.[241] The RDEIR must separately identify and analyze the significance of the Project's impacts *before* proposing mitigation measures. If the County's less than significant conclusions rely on compliance with those measures, then it should characterize such compliance as mitigation for the significant impact, rather than treating the impact as less than significant and claiming that no mitigation is required. ABJC-24 cont

V. THE PROJECT IS INCONSISTENT WITH LAND USE PLANS, LAWS, AND POLICIES

An EIR must discuss "any inconsistencies between the proposed project and applicable general plans, specific plans and regional plans" including "regional land use plans for the protection of the coastal zone . . ."[242] The RDEIR shows a lack of consistency with several land use plans, laws, and policies covering the Project area, including the South County Coastal Area Plan ("SCCAP"), the Coastal Zone Land Use Ordinance ("CZLUO"), and the Coastal Act.

A. The Project is Inconsistent with the South County Coastal Area Plan

ABJC-25

SCCAP describes county land use policies for the coastal zone portion of the South County Planning Area, including regulations which are also adopted as part of the Land Use Ordinance and Local Coastal Program ("LCP"). It allocates land use throughout the planning area by land use categories, which determine the varieties of land use that may be established on a parcel of land, as well as defining their allowable density and intensity. The Project is inconsistent with the SCCAP in two ways.

First, the expansion of the SMR and resulting reduction of the surrounding buffer zone conflicts with the SCCAP. In discussing the industrial area containing the SMR and surrounding undeveloped lands, the SCCAP states:

---

[240] *Id.*, at 4.9-27.
[241] *Id.*, at 4.9-26.
[242] CEQA Guidelines § 15125(d).

> [T]he large vacant areas provide a desirable buffer from adjacent uses and an area where wind-carried pollutants can be deposited on-site, thereby not affecting neighboring properties. This is particularly important to the agricultural uses in the Santa Maria Valley. . . No major expansion or alterations to these operations are envisioned at this time.

This provision emphasizes the importance of the buffer zone around the SMR. As described in the RDEIR, the Project would extend industrial use "approximately 0.85 mile into the undeveloped area in the eastern portion of the Project Site,"[243] thus reducing the buffer between residential and recreational uses from "approximately 1.4 miles to 0.6 mile."[244] The Project would also similarly reduce buffer zones "between the industrial structures and agricultural crops located northeast and southeast of the Project Site."[245] The RDEIR further states that the Project would convert approximately 18.6 acres of undeveloped land surrounding SMR to industrial use and that "[t]he proposed development within the buffer area would still accommodate an approximately 400-foot buffer between the nearest agricultural areas," indicating an even more drastic reduction than described elsewhere in the RDEIR. It is unclear from these conflicting numbers how much of the buffer zone is actually being reduced. However, what is clear is that reducing the buffer zone, which the SCCAP deems to be important, is inconsistent with SCCAP and the County is required to address this issue in greater detail under CEQA.

ABJC-25 cont

The RDEIR acknowledges the potential for increased resource impacts due to a reduced buffer, stating that because of the increased risk, the land use impacts are significant and unavoidable. The RDEIR relies on mitigation discussed specifically for resource impacts.[246] However, as stated herein, many of the mitigation measures offered in the RDEIR do not adequately address the impacts from the Project, particularly if those impacts were exacerbated by a loss of buffer land.

---

[243] RDEIR, p. 4.8-22.
[244] *Id.*
[245] *Id.*
[246] *Id.*, at 4.8-18.

Second, another area of inconsistency relates to a provision in the SCCAP, which states:

> Any proposed modification or expansion of the [SMR] requires Development Plan approval and shall be subject to. . . [p]hasing plan for staging development indicating the anticipated time table and site plans for project initiation, expansion possibilities, completion, consolidation possibilities, and decommissioning.[247]

As stated above, the RDEIR utterly fails to describe a stable duration and decommissioning plan. The RDEIR ambiguously states that "[t]he SMR rail project is expected to operate for the remaining life of the SMR, which could be another 20 or 30 years, *if not longer*."[248] The RDEIR also fails to offer any concrete decommissioning plans whatsoever, merely stating that "[a]t the end of the life of the SMR, the County of San Luis Obispo would undertake an environmental review of the decommissioning and abandonment of the entire refinery complex, including the rail spur."[249] The vague duration of the Project and the complete lack of decommissioning plans are in clear conflict with the requirements of the SCCAP. Impacts from Project decommissioning, just like construction and operation, will likely cause significant and unmitigated environmental impacts. The fact that the RDEIR does not address these impacts, as required under CEQA and the SCCAP, leads to an unmitigated significant impact. ABJC-25 cont

B. The Project is Inconsistent with the Coastal Act and the County Coastal Zone Land Use Ordinance

The CZLUO regulates land use, supporting orderly development and beneficial use of lands within the county and minimizing the effects on the public from such development. It also has a mandate to protect and enhance the significant natural, historic, archaeological and scenic resources within San Luis Obispo County. The CZLUO includes permit requirements, site design and site development standards, operational standards, and combining designation standards to implement the County General Plan and Local Coastal Program, a ABJC-26

[247] South County Coastal Area Plan, Chapter 8: Planning Area Standards, Industrial, p. 8-6, *available at* http://www.slocounty.ca.gov/Assets/PL/Area+Plans/South+County+Coastal+Area+Plan.pdf.
[248] *Id.*, at 2-36.
[249] *Id.*

program under the Coastal Act that allows local governments to take over permitting authority for most new development in coastal zones. The Coastal Act is administered by the California Coastal Commission ("CCC"), which issues guidance to local governments in protecting the coastal zone. Should the County fail to protect the coastal zone in accordance with Coastal Act requirements during this environmental review process, its decisions are appealable to the CCC.[250]

The Project is inconsistent with the Coastal Act and the CZLUO because it is sited in or adjacent to an unmapped environmentally sensitive habitat area ("ESHA"). ESHA is defined under the Coastal Act and the CZLUO as "any area in which plant or animal life or their habitats are either rare or especially valuable because of their special nature or role in an ecosystem and which could be easily disturbed or degraded by human activities and developments."[251] The CZLUO further distinguishes between mapped and unmapped ESHA. Mapped ESHA are areas that have already been mapped as Land Use Element combining designations.[252] Unmapped ESHA may not be mapped as Land Use Element combining designations but is "determined by the County at or before the time of application acceptance and shall be based on the best available information."[253] ESHA is afforded certain protections under the Coastal Act and local coastal plans and policies such as the CZLUO.

ABJC-26 cont

The RDEIR determined the Project site was not an ESHA, despite the clear presence of ESHA elements. The County cited to several reasons for its determination including:

> 1) absence of species protected under State and Federal Endangered Species Acts; 2) absence of fully protected species; 3) absence of CNPS List 1B plants; 4) lack of equivalent characteristics, function and value that is shown in nearby ESHA; 5) absence of sensitive vegetation types under the most current classification system; and, 4)[*sic.*] historical land use impacts resulting in degraded condition of existing vegetation types. . .[254]

---

[250] *Id.*, at 4.8-2.
[251] Coastal Act § 30107.5; Coastal Zone Land Use Ordinance § 23.11.030.
[252] Coastal Zone Land Use Ordinance § 23.11.030.
[253] Coastal Zone Land Use Ordinance § 23.11.030.
[254] RDEIR, p. 4.4-24.

However, each of these factors is misleading. The biological analysis shows the presence of several protected species near the Project including the NML, which is federally endangered species and is on the CNPS 1B list.[255] According to the CNPS rare plant ranking system, CNPS 1B plants "are rare throughout their range with the majority of them endemic to California."[256] In addition, "[m]ost of the plants that are ranked 1B have declined significantly over the last century."[257] As Mr. Cashen points out, species such as the white-tailed kite, a fully protected species in California, and the burrowing owl, a species of concern, are also present. Both of those avian species are also protected by the Migratory Bird Treaty Act ("MBTA").[258] Indeed, the RDEIR acknowledges several protected plant species that could occur.[259] According to Mr. Cashen, the County has provided no scientific basis for its conclusion that those plants are "absent." Indeed, the Blochman's leafy daisy, which is another CNPS 1B plant, is found on the Project site as well.[260] The comparison of nearby ESHA is not a factor in determining whether an area is an ESHA, and the RDEIR cites no legal support for that notion or even provide the characteristics, functions, and values in the "nearby ESHA."[261]

ABJC-26 cont

Furthermore, the CCC guidance for local governments states that "even disturbed or degraded habitats may constitute ESHA."[262] Mr. Cashen notes that the RDEIR's suggestion that a high level of degradation is found around the Project area is "misleading."[263] The RDEIR's supporting biological survey reports acknowledge that the Project area: (a) "provides habitat of good functional value for many wildlife species including several species of special concern;" (b) "is considered an important foraging location for both sedentary and migratory raptor species in the area;" and, (c) "provides a relatively large, undisturbed natural corridor for wildlife to move between the Nipomo Mesa and areas further inland, and the

---

[255] California Native Plant Society, Rare and Endangered Plant Inventory, Nipomo Mesa lupine, *available at* http://www.rareplants.cnps.org/detail/1038.html.
[256] California Rare Plant Ranking System, *available at* http://www.cnps.org/cnps/rareplants/ranking.php.
[257] *Id.*
[258] Cashen Comments, p.12.
[259] RDEIR, Appendix C.2, Table 2.
[260] Cashen Comments, p. 11 – 12.
[261] *Id.*, at 12.
[262] CCC LCP Update Guide, Section 4, p. 6 (2013) http://www.coastal.ca.gov/lcp/LUPUpdate/LUPGuidePartI_4_ESHA_July2013.pdf.
[263] Cashen Comments, p. 12.

undeveloped coastline west of the Site."[264] Therefore, Mr. Cashen concludes that "even though there have been historical land use impacts, the Project site has numerous habitat values that are 'environmentally sensitive' and qualify it as an ESHA."[265]

The RDEIR seemingly concludes that because some of these species may not have been sighted squarely within the construction and operation boundaries, that ESHA does not apply. But the County's own land use policies regulate not only development in an ESHA, but development *adjacent* to an ESHA. Even if the disturbance area itself is not ESHA, the area immediately surrounding the disturbance area does meet the definition of ESHA, as explained by Mr. Cashen.[266]

In addition, it is clear that the Project will result in temporary and permanent impacts to a large area of central dune scrub, which is considered sensitive in California.[267] The CCC has "typically found central dune scrub, even in a degraded condition, to meet the definition of ESHA," according to one CCC staff member.[268] Such a finding in this case may present a challenge to the project's consistency with the applicable biological resources policies of the LCP (such as Policy 36), at least as currently proposed. Policy 36 in the County's Coastal Plan Policies require the protection of dune vegetation, stating that "disturbance or destruction of any dune vegetation shall be limited to those projects which are dependent upon such resources where no feasible alternatives exist and then shall be limited to the smallest area possible. . ."[269] Although the policies allow limited development under certain circumstances, and only when impacts are mitigated to the maximum degree, that is not the case here.

ABJC-26 cont

Thus, CZLUO provisions limiting development in ESHAs apply to this Project. The CZLUO states:

> Approval of a land use permit for a project within or adjacent to an Environmentally Sensitive Habitat shall not occur unless the

[264] *Id.*; RDEIR, Appendix C.2, pp. C.2-9, -10, and -20.
[265] Cashen Comments, p. 12.
[266] *See id.*
[267] *See id.*; RDEIR, p. 4.4-3, 4.4-6, 4.4-31.
[268] Email from Daniel Robinson, Coastal Commission, to Murry Wilson, SLO County Planning Department (March 11, 2014).
[269] County of San Luis Obispo, Local Coastal Program Policy Document: A Portion of the San Luis Obispo County Land Use Element of the General Plan, Policy 36.

> applicable review body first finds that: (1) There will be no significant negative impact on the identified sensitive habitat and the proposed use will be consistent with the biological continuance of the habitat. (2) The proposed use will not significantly disrupt the habitat.[270]

The CZLUO also sets out specific steps, such as submitting detailed analysis on ESHA impacts, that must be taken by an Applicant for a project sited within or adjacent to an ESHA. The CZLUO further states:

> All development and land divisions within or adjacent to an [ESHA] shall be designed and located in a manner which avoids any significant disruption or degradation of habitat values. This standard requires that any project which has the potential to cause significant adverse impacts to an ESHA be redesigned or relocated so as to avoid the impact, or reduce the impact to a less than significant level where complete avoidance is not possible.[271]

ABJC-26 cont

It is clear that an ESHA requires more detailed analysis and higher levels of protection from development, particularly development that could cause significant environmental impacts, such as this Project. Furthermore, the extent of the ESHA review and who comprised the reviewing team is unclear from the RDEIR. Documentation from the County's 2001 Local Coastal Program periodic review indicates that a review team to determine ESHA must be "comprised of County staff, project biologist(s), and representatives from involved wildlife agencies and organizations" and that the team "shall conduct a Site Specific Constraints Analysis."[272] The RDEIR does not indicate that representatives from wildlife agencies were involved in the ESHA review, nor does it indicate that any formal Site Specific Constraints Analysis was completed.[273] Because the Project site and/or the surrounding area meets the definition of ESHA, the RDEIR should be revised to address this issue and provide further analysis of the Project's significant impacts on, and mitigation for, the ESHA.

---

[270] Coastal Zone Land Use Ordinance § 23.07.170(b).
[271] Coastal Zone Land Use Ordinance § 23.07.170(e).
[272] San Luis Obispo County, LCP Periodic Review (revised 2001), Section 4: Environmentally Sensitive Habitats And Wetlands, p. 137, *available at* http://www.coastal.ca.gov/recap/slo/slo-esha.pdf.
[273] *See* RDEIR, p. 4.4-24, 4.8-19 (discussions on ESHA determination).

VI. THE COUNTY MUST ENSURE AGAINST THE USE OF BAKKEN CRUDES

The RDEIR states that the Project would not result in the delivery of Bakken crude, or any other similar crudes, to the SMR.[274] Bakken crude is a light sweet crude with a high API gravity and a low sulfur content. In addition, Bakken "may be more flammable than traditional heavy crude oil," according to the Pipeline and Hazardous Materials Safety Administration ("PHMSA").[275] The PHMSA is also investigating whether Bakken crude might contain large amount of gases and related liquids such as butane, propane and ethane.[276] The SMR is not designed to process light sweet crude, and thus any future changes would require major capital projects and changes at the facility. Without further assurances from the County and Applicant that Bakken or other light sweet crudes will not be imported in the future, the facility changes are a reasonably foreseeable consequence of the Project, given the Applicant's public statements and the advantaged nature of Bakken. Processing Bakken would change the scope and severity of the Project's environmental impacts.

ABJC-27

Our office received documents from the County under the Public Records Act on November 18, 2014. Those documents contain an email on August 18, 2014 from a County consultant to Thomas Campbell of the California Office of Emergency Services stating that "Phillips has made a commitment to not deliver any Bakken crude to the refinery, since the refinery is only designed to handle heavy sour crudes."[277] In another email from the County staff to County Supervisor Caren Ray, staff acknowledged the possibility of incorporating a condition of approval regarding the use of Bakken.[278] Given both the County's and Applicant's apparent commitment to ensure against Bakken importation, a prohibition against it would not place a substantial burden on the Applicant, and would provide the public with an enforceable measure. The County should include a condition of approval that ensures against the importation of any Bakken or crudes or other light sweet crudes

---

[274] *Id.*, at 2-1.
[275] Pipeline and Hazardous Materials Safety Administration, *Safety Alert: Preliminary Guidance from Operation Classification*, *supra*.
[276] Gold & Cook, Wall Street Journal, *Cities Grapple With Oil-Train Safety*, Jan. 15, 2014.
[277] Email from John Peirson, Principal, Marine Research Specialists, to Thomas Campbell, Deputy Chief, Deputy Chief, HazMat, Fire and Rescue Division, California Office of Emergency Services (August 18, 2014).
[278] Email from Murry Wilson, SLO County Planner for Project, to Caren Ray, SLO County Supervisor, District 4 (August 19, 2014).

to the SMR. If the County cannot or will not secure such a measure, the RDEIR must then address the potential for Bakken or similar crude imports as part of the Project and assess the potentially significant impacts that would occur as a result. ABJC-27 cont

VII. THE VERTICAL COASTAL ACCESS PROGRAM-LEVEL ANALYSIS IS INADEQUATE

The RDEIR provides a "programmatic analysis of the potential environmental impacts of various coastal access options for the SMR site." Programmatic analysis refers to "tiered" environmental review. Tiering is the process of using the analysis of general matters in broader CEQA analyses in the development of a subsequent, narrower CEQA document.[279] Under CEQA, the purpose of a programmatic EIR is to allow a lead agency to "consider broad policy alternatives and program wide mitigation measures. . ."[280]

The impacts assessed in a programmatic EIR are neither site- nor project-specific. The subsequent analysis will incorporate the programmatic environmental analysis by reference from the broader CEQA document and concentrate solely on the site-specific issues identified for the subsequent project that have not been analyzed in the programmatic CEQA document.[281] "A program EIR as provided for in the Guidelines is an optional procedure to review in one document a "series of actions that can be characterized as one large project[.]"[282] ABJC-28

The County chose to undertake a programmatic analysis of the VCA for reasons that are unclear. The VCA is required as a condition on the Throughput Increase Project. The condition states in full:

> Prior to issuance of the Notice to Proceed authorizing an increase in Refinery throughput, the applicant shall comply with Section 23.04.420 – Coastal Access Required. Construction of improvements associated with vertical public access (if required) shall occur within 10 years of the effective date of this permit (including any required

[279] *See* CEQA Guidelines §15152.
[280] *See* 40 CFR 1508.28; 43 CFR 46.140; California Public Resources Code §§ 21093–21094; 14 CCR 15152 and 15169.
[281] *Id.*
[282] *Al Larson Boat Shop, Inc., et al. v. Board of Harbor Commissioners of the City of Long Beach* (1993) 18 Cal.App.4th 729, 741 (quoting CEQA Guidelines, § 15168(a)).

> Coastal Development Permit to authorize such construction) or at the time of any subsequent use permit approved at the project site, whichever occurs first. The approximate location of the vertical access required by this condition of approval shall be located within or immediately adjacent to the existing maintenance road. . .[283]

There is no indication from this condition that the VCA is comparable to a general plan or policy, or that the County should undertake a programmatic analysis and defer project-specific analysis, given that the condition clearly states that "[c]onstruction. . . shall occur. . . at the time of any subsequent use permit approved at the project site." The RDEIR states that the County has not determined several aspects of the VCA such as location and whether substantial improvements are required.[284] The CZLUO requires that "[p]ublic access from the nearest public roadway to the shoreline and along the coast shall be provided in new development projects" and the RDEIR acknowledges that either the Throughput Increase Project or this Project would trigger that requirement.[285] However, the analysis falls short because the RDEIR merely provides various general options for the VCA and includes some of the same inadequate mitigation measures found in the Rail Spur portion of the RDEIR.[286] ABJC-28 cont

CEQA Guidelines provide that tiering CEQA review can be used for a "general plan or component thereof" and that site-specific analysis can only be deferred "as long as deferral does not prevent adequate identification of significant effects of the planning approval at hand."[287] Site-specific analysis is particularly important for the VCA on account of the various sensitive species and ESHA in the area, but the RDEIR does not give a definitive location and scope in order to adequately assess significant impacts to those resources.[288] The County does not offer evidence to support its decision to defer project-level review for what amounts to a *project* and not a program. Because of the uncertainties regarding the specifics of the VCA, an educated and comprehensive public review of the VCA cannot be completed, thus undermining the basic purpose of CEQA. The County's failure to

---

[283] RDEIR, p. 9-4.
[284] *Id.*, at 9-3.
[285] *Id.*, at 9-1.
[286] *See* RDEIR, p. 9-35 (Nipomo Mesa lupine mitigation).
[287] CEQA Guidelines § 15152.
[288] *See generally* RDEIR, Section 9: Vertical Coastal Access Assessment.

evaluate the VCA and the Applicant's failure to adequately describe the VCA render the entire permit process and CEQA review inadequate and premature. ABJC-28 cont

VIII. CONCLUSION

For all of the reasons discussed above, the RDEIR for the Project remains wholly inadequate under CEQA. It must be thoroughly revised to include an adequate description of the Project, including the VCA, and provide analysis of, and mitigation for, all of the Project's significant impacts. This revision will necessarily require that the RDEIR be recirculated for public review. Until the RDEIR has been revised and recirculated, as described herein, the County may not lawfully approve the Project. ABJC-29

Sincerely,

Laura E. Horton

LEH:clv
Attachments

Attachment 1

Pless Environmental, Inc.
440 Nova Albion Way, Suite 2
San Rafael, CA 94903
(415) 492-2131 voice
(815) 572-8600 fax

November 23, 2014

Via Email

Laura Horton
Adams Broadwell Joseph & Cardozo
601 Gateway Boulevard, Suite 1000
South San Francisco, CA 94080-7037
lhorton@adamsbroadwell.com

Re: Review of the Phillips 66 Company Rail Spur Extension and Crude Unloading Project Revised Public Draft Environmental Impact Report and Vertical Coastal Access Project Assessment

Dear Ms. Horton,

Per your request, I have reviewed the Revised Draft Environmental Impact Report ("Revised Draft EIR") for the Phillips 66 Company Rail Spur Extension and Crude Unloading Project ("Rail Spur Project" or "Project") issued by San Luis Obispo County ("County") for review under the California Environmental Quality Act ("CEQA") in October 2014.[1] The County previously issued a Draft Environmental Impact Report for the Project in November 2013[2] ("hereafter Initial Draft EIR"), which I reviewed in my January 27, 2014 comment letter to your firm.[3] The County received a large number of comments on the Draft EIR from the general public, governmental agencies, and organizations and schools, as well as from the Phillips 66 Company

---

[1] San Luis Obispo County, Phillips 66 Company Rail Spur Extension and Crude Unloading Project Revised Public Draft Environmental Impact Report and Vertical Coastal Access Project Assessment, October 2014, SCH # 2013071028; http://www.slocounty.ca.gov/Assets/PL/Santa+Maria+Refinery+Rail+Project/Phillips+66+Company+Rail+Spur+Extension+Project+(Oct+2014)/Phillips+SMR+Rail+Project+Public+Draft+EIR.pdf.

[2] San Luis Obispo County, Phillips 66 Company Rail Spur Extension Project Public Draft Environmental Impact Report and Vertical Coastal Access Project Assessment, November 2013, SCH # 2013071028; http://www.slocounty.ca.gov/planning/environmental/EnvironmentalNotices/railproject.htm#.

[3] Petra Pless, Pless Environmental, Inc., Letter to Elizabeth Klebaner, Adams, Broadwell, Joseph and Cardozo, Re: Review of the Phillips 66 Company Rail Spur Extension Project Public Draft Environmental Impact Report and Vertical Coastal Access Project Assessment, January 27, 2014; Exhibit 1 and http://www.slocounty.ca.gov/Assets/PL/Santa+Maria+Refinery+Rail+Project/Comments+on+the+Draft+EIR/Organizations+and+Schools/Adams+Broadwell.pdf (*see* Attachment 4).

("Phillips 66" or "Applicant").[4] After reviewing these comments, the County decided to recirculate a revised Draft EIR for public comment:

> The decision to recirculate the EIR was primary based upon the need to expand the discussion of mainline UPRR [Union Pacific Rail Road] impacts beyond the borders of San Luis Obispo County. Due to extensive revisions in various parts of the document, this revised Draft EIR does not contain specific written responses to the comments received on the initial Draft EIR. All comments on the previous DEIR were reviewed and the revised Draft EIR was modified to address comments that were applicable to the revised document (refer to CEQA Guidelines, Section 15088.5(f)(1))... The various stakeholders will have to submit new comments on the revised Draft EIR for them to be considered in the Final EIR.[5]

This statement is misrepresentative as to the extent of changes as the Project analyzed in the Revised Draft EIR is substantively different than that analyzed in the Initial Draft EIR. (*See* Comment II.) Also, I note that the Public Notice of Availability for the Revised Draft EIR does not mention that comments on the Initial Draft EIR will not be considered[6], which may mislead prior commenters, especially members of the general public, as to the County's intent. Further, the Revised Draft EIR relies on prior analyses without providing a copy of these analyses. Specifically, the Revised Draft EIR provides copies of spreadsheets updating the results of the Initial Draft EIR's health risk assessment to include an age distribution factor as recommended by the Office of Environmental Health Hazard Assessment ("OEHHA") but does not include the AERMOD modeling files supporting the health risk assessment which were previously provided in Appendix B to the Initial Draft EIR.[7] If the County indeed intends to disregard prior comments it must provide all documentation it relied upon for the Revised Draft EIR for public review. ABJC-29a

My comments below focus on the adequacy of the Revised Draft EIR's project description and Project impacts with respect to air quality and greenhouse gas ("GHG") emissions (Section 4.3). My comments incorporate by reference upon some of Dr.

---

[4] San Luis Obispo County, Santa Maria Refinery Rail Project, Comments on the Draft EIR; http://www.slocounty.ca.gov/planning/environmental/EnvironmentalNotices/railproject.htm#.

[5] Revised Draft EIR, p. 1-12.

[6] San Luis Obispo County, Public Notice, Notice of Availability of Recirculated Draft Environmental Impact Report; http://www.slocounty.ca.gov/Assets/PL/Santa+Maria+Refinery+Rail+Project/Phillips+66+Company+Rail+Spur+Extension+Project+(Oct+2014)/Philips+66+Notice+of+Availability+-+NOA.pdf.

[7] Initial Draft EIR, Appx. B, pp. B-234 through B-786.

Phyllis Fox's comments on the Initial Draft EIR[8] and forthcoming comments on the Revised Draft EIR as well as her comments on the Draft EIR for the Phillips 66 Propane Recovery Project[9] and her forthcoming comments on the Recirculated Draft EIR for the Propane Recovery Project.[10] I respectfully request that the County address all issues I refer to in my comments.

My qualifications as an environmental expert include a doctorate in Environmental Science and Engineering from the University of California Los Angeles. I have over 20 years of experience in the environmental field including air quality and air pollution control; air quality management; greenhouse gas emission inventory and control; environmental permitting; litigation support; review under CEQA, National Environmental Policy Act ("NEPA") and state and federal Clean Air Acts. I have provided expert comments in the permitting/licensing proceedings of a number of refineries and associated facilities under the federal and state Clean Air Acts and in the environmental review process under CEQA. My work has been cited in a published CEQA opinion.[11] My résumé is attached to this letter.

I. Project Description

The Project consists of a proposal by Phillips 66 to modify the existing rail spur at its Santa Maria Refinery ("SMR") in unincorporated San Luis Obispo County to allow for delivery of crude oil to the facility by rail. The Rail Spur Project would include an extension of an existing rail spur, a railcar crude oil unloading facility, and associated above-ground pipelines.[12] Modification of the existing rail spur would entail constructing five parallel tracks that would support unloading trains delivering crude

---

[8] Phyllis Fox, Comments on Environmental Impact Report for the Phillips 66 Rail Spur Extension Project, Santa Maria, California, prepared for Sierra Club, San Francisco, CA, January 27, 2014; (http://www.slocounty.ca.gov/Assets/PL/Santa+Maria+Refinery+Rail+Project/Comments+on+the+Draft+EIR/Organizations+and+Schools/Communities+For+A+Better+Environment-$!23+Comments+Only.pdf. (Exhibit 2).

[9] Phyllis Fox, Comments on Environmental Impact Report for the Phillips 66 Propane Recovery Project, Rodeo, California, prepared for Shute, Mihaly & Weinberger LLP on behalf of Rodeo Citizens Association, November 15, 2013. (Exhibit 3, letter only; exhibits available at http://ca-contracostacounty2.civicplus.com/DocumentCenter/Index/2713).

[10] Dr. Fox's comment letter on the Phillips 66 Propane Recovery Project will be made available at the Contra Costa County's website at http://ca-contracostacounty2.civicplus.com/4729/Phillips-66-Propane-Recovery-Project.

[11] *California Unions for Reliable Energy et al. v. Mojave Desert Air Quality Management District et al.*, 178 Cal.App.4th 1225 (Cal. App. 2009); https://casetext.com/case/ca-unions-v-mojave-desert-air-quality#.U90XtGMVCAI.

[12] Revised Draft EIR, p. ES-3.

oil, relocation of the two existing coke rail loading tracks, replacement of the rails on the two existing coke loading rail tracks, and associated facilities. Two of the new tracks would surround an unloading rack and then would come together to form a common track that extends to the east of the loading area to allow for the entire train to be parked off of the mainline track and unloaded.[13] Three additional tracks would extend the full length of the rail spur and run parallel to the unloading area to allow for up to two full trains to temporarily be on the SMR site at one time in case a second train arrives while the first is still being unloaded.[14]

Trains, both unit and manifest[15], would deliver crude oil to the Santa Maria Refinery for processing. According to the Revised Draft EIR, the facility would receive up to five unit trains per week (or a combined total of five unit and manifest trains), with an annual maximum of 250 trains. In a unit train configuration, trains would consist of three locomotives, two buffer cars, and 80 railcars, each carrying between 26,076 and 28,105 gallons ("gal"). The unloaded crude oil would be transferred from the new unloading facility to existing crude oil storage tanks at the SMR via a new on-site above-ground pipeline.[16] The Revised Draft EIR states that the tank cars would be limited to this range of volume (as opposed to the rail car capacity of approximately 31,808 gallons) due to the estimated weight of the crude oil that would be delivered to the SMR. Thus, each unit train would deliver a total volume of crude oil of between 49,670 and 53,532 barrels ("bbls").[17] With 250 80-car unit trains (20,000 rail cars) annually, the SMR unloading facility could receive up to 12.4 million to 13.4 million barrels of crude oil by rail per year.[18]

The SMR is designed to process heavy, high-sulfur crude oil. Semi-refined liquid products from the SMR (naphtha and gas oils) are sent via a 200-mile pipeline to the Phillips 66 refinery in Rodeo in the San Francisco Bay Area ("Rodeo Refinery") for upgrading into finished petroleum products (gasoline and other transportation fuels); together these two refineries comprise the Phillips 66 San Francisco Refinery.[19]

---

[13] Revised Draft EIR, p. 1-4.

[14] Revised Draft EIR, p. 2-10.

[15] According to the Revised Draft EIR, p. 1-1, unit trains consist of approximately 80 tank cars and associated locomotives and other supporting cars that stay together as one assembly fully dedicated to delivery of crude oil to the SMR. Manifest trains may have a variety of car types and cargos, other than crude oil, that are not fully dedicated as are unit trains. Manifest trains may deliver one or more cars to the refinery and then continue to other destinations to deliver other cargo.

[16] Revised Draft EIR, p. ES-5.

[17] *Ibid*.

[18] (250 trains/year) × (80 rail cars/train) × (26,067 gal/rail car) / (42 gal/bbl) = 12,412,857 bbls/year; (250 trains/year) × (80 rail cars/train) × (28,105 gal/rail car) / (42 gal/bbl) = 13,383,333 bbls/year.

[19] Revised Draft EIR, p. 2-1.

II. Changes in the Project Description

The Revised Draft EIR does not provide a summary of the changes to the project description, which differs markedly from that provided in the Initial Draft EIR and the Initial Study.[20] Some project updates which affect the analyses of impacts with respect to air quality, greenhouse gas emissions, health risks, and risks and hazards are summarized here:

- The Initial Draft EIR stated that the feedstock delivered via rail would be sourced from oilfields throughout North America based on market economics and other factors with the most likely sources the Bakken field in North Dakota or Canada.[21] In contrast, the Revised Draft EIR allows for delivery of North American heavy sour crudes, including Canadian tar sands[22] but claims that the refinery feedstock definition excludes Bakken crude oil and that no Bakken crude oil would be delivered to the SMR as part of the project.[23]
- The Revised Draft EIR specifies that the unloading facility would be equipped with a heating system that would convey steam — about 30,000 pounds per hour ("lbs/hour") — to heat the rail cars during cold weather prior to unloading if the crude oil had cooled to a temperature below the required pour point. Phillips 66 would construct new infrastructure to utilize steam already produced at the SMR. The system would divert steam from the facility's existing steam production system and would include two above-ground steam lines (total of 6,300 feet), a condensate collection tank, a 2,300-foot condensate pipeline, and a condensate pump. Phillips 66 would need to purchase an offsetting amount of electricity when steam is diverted to heat the rail cars.[24] The Initial Draft EIR identified neither this new infrastructure nor the need for heating rail cars.[25]
- The Revised Draft EIR eliminated the option of using articulated unloading arms as an alternative to flexible hoses at the unloading facility.[26]

ABJC-30

---

[20] *See* Initial Draft EIR, Appx. I.

[21] Initial Draft EIR, p. ES-3.

[22] Revised Draft EIR, pp. 2-33, 4.3-35, and 4.12-27.

[23] Revised Draft EIR, pp. ES-5, 1-4.

[24] Revised Draft EIR, pp. 2-14 through 2-17.

[25] *See* Initial Draft EIR, Section 2.3.4.

[26] Compare: Revised Draft EIR, Figure 2-5 and p. 2-14, and Initial Draft EIR, Figure 2-6 and p. 2-14.

- The Revised Draft EIR eliminated one of the two air eliminator vessels and two associated carbon beds by routing the collected vapors from the two crude oil unloading racks to a common air eliminator with two associated carbon beds.[27] ABJC-30 (cont.)

III. The Project Is Improperly Piecemealed

The Revised Draft EIR narrowly analyzes the environmental impacts associated with the modification of an existing rail spur at the SMR to allow for import and unloading of crude oil by rail. This narrow analysis ignores that the Project is part of a much larger endeavor by Phillips 66 which aims to implement a San Francisco Refinery-wide crude oil switch to refining so-called "advantaged" crude oils, *i.e.*, mostly mid-continent sources of crude oil that are stranded without pipeline access and, as a result, are cost-advantaged. The Rail Spur Project would allow for delivery of large amounts of such advantaged crudes to the SMR supplementing for the well-known decline in California's crude oil production and is thus inextricably linked to the Throughput Increase Project at the SMR, for which the Final Environmental Impact Report was recently approved.[28] The ten percent increase in crude oil throughput at the SMR permitted under the Throughput Increase Project could not be realized but for the Rail Spur Project, as discussed in more detail below. Thus, these two projects should have undergone collective rather than individual CEQA review. ABJC-31

The change of the crude slate at the SMR to cost-advantaged crude oils would also affect operations and emissions at the other end of the San Francisco Refinery in Rodeo, which receives semi-refined products from the SMR for final processing, as discussed below. The Rodeo Refinery is currently undergoing CEQA review (recirculated Draft EIR revising the 2013 Final EIR for the project) for the so-called Propane Recovery Project, which would permit an increase in propane and butane recovery to export for sale.[29] This planned increased recovery of propane and butane is, at least in part, necessary to account for the increased production anticipated with the SMR Throughput Project and facilitated by the Rail Spur Project. (*See* below.)

Santa Maria Refinery Throughput Increase Project

Despite receiving several comments on the Initial Draft EIR with respect to the piecemeal approach to CEQA review of these projects, the County in the Revised

---

[27] *Ibid*.

[28] *See* Revised Draft EIR, ES-23.

[29] Contra Costa County, Phillips 66 Propane Recovery Project; http://ca-contracostacounty2.civicplus.com/4729/Phillips-66-Propane-Recovery-Project.

Draft EIR denies that a nexus exists. For the nexus between the SMR Throughput Increase Project and the Rail Spur Project, the Revised Draft EIR provides the following argument:

> The Rail Spur Project would not affect the amount (throughput volume) of material processed at the refinery. Throughput levels at the refinery are capped by the County of San Luis Obispo and by the SLOCAPCD. The ability of the SMR to operate at the maximum approved throughput level is based on the existing infrastructure and is not dependent on, or related to, the Rail Spur Project. However, if and when local crude oil production (the current major source of oil for the SMR) declines, the Rail Spur Project, if approved, would allow the SMR to maintain operating up to its permitted throughput levels.
>
> The land use application for the SMR Throughput Project was submitted in 2008 and the Final EIR for the Throughput Project was certified by the County Board of Supervisors in March of 2013, which was approximately two months before the application for the Rail Spur Project was submitted to the County. Therefore, evaluation of these projects separately would not be considered "piece-mealing" under CEQA.[30]

ABJC-31 (cont.)

I disagree with the County's conclusion regarding piecemealing and find that the Rail Spur Project and the SMR Throughput Increase Project are interdependent.

First, Phillips 66 commissioned specific studies in preparation of the CEQA review process for the Rail Spur Project well before the Throughput Project EIR was certified in March of 2013:

- ARCADIS U.S., Inc. conducted fall and winter surveys of the project area for sensitive botanical species on October 9 and November 13, 2012 and took photographs of the site on October 10, 2012;[31]
- ARCADIS U.S., Inc. conducted a wildlife and habitat assessment on October 9 and November 13, 2012;[32]
- SPEC Services, Inc. prepared piping and instrument diagrams for review on November 26, 2012 and issued them for review on February 20, 2013;[33] and

---

[30] Revised Draft EIR, p. ES-23.

[31] *See* Initial Draft EIR, Appx. C.1, and Revised Draft EIR, Appx. C.1.

[32] *See* Initial Draft EIR, Appx. C.2, and Revised Draft EIR, Appx. C.2.

[33] *See* Initial Draft EIR, Appx. E, pp. E-2 and E-3, and Revised Draft EIR, Appx. E, pp. E-2 and E-3.

- SPEC Services, Inc. issued architectural plans and elevation drawings for review on February 20, 2013.[34]

Second, as acknowledged by the Revised Draft EIR, crude oil production in California has been in substantial decline for decades,[35] almost 50 percent (48.9%) since 1985[36] with an accelerated annual decline of over three percent since 2000;[37] crude oil production in Santa Barbara County, both onshore and off-shore, has declined to 30,000 bbls/day.[38] The EIR for the SMR Throughput Increase Project did not discuss this well-known decline in local crude oil supply and claimed not to know "where the additional crude oil would come from that would allow the Refinery to operate at a higher throughput level."[39] However, the Initial Draft EIR for the Rail Spur Project explicitly acknowledged that California's declining crude oil production generated the need for the Rail Spur Project to support the SMR's continued operation: ABJC-31 (cont.)

> This declining production with the lack of ability of the refinery to source competitively priced crude oil from outside the local area generates the need for the Rail Spur Project.[40]

The Revised Draft EIR removed this statement from its discussion of the decline in California crude oil production (presumably in response to prior piecemealing comments in an effort to disassociate the Rail Spur Project from the Throughput Project[41] and only vaguely acknowledges that "[i]n the long-term, the need for the SMR rail project could be driven by declines in local production of crude oil that can be delivered by pipeline."[42]

---

[34] *See* Initial Draft EIR, Appx. A, pp. A-5 through A-7, and Revised Draft EIR, Appx. A.1, pp. A.1-6 through A.1-8.

[35] Revised Draft EIR, p. 236.

[36] Stillwater Associates LLC, RRT Quarterly Meeting, California Petroleum & Background, Signal Hill, CA, prepared for the California Energy Commission, August 13, 2014; http://www.rrt9.org/go/doc/2763/2228946/.

[37] California Energy Commission, Transportation Energy Forecasts and Analyses for the 2011 Integrated Energy Policy Report, CEC-600-2011-007-SD, August 2011, p. 14; http://www.energy.ca.gov/2011publications/CEC-600-2011-007/CEC-600-2011-007-SD.pdf.

[38] Revised Draft EIR, p. 2-36.

[39] Final EIR for SMR Throughput Project, p. 2-26.

[40] Initial Draft EIR, p. 2-30.

[41] *See* Revised Draft EIR, p. 2-36.

[42] *See* Revised Draft EIR, p. 2-36.

Given the long-standing knowledge of the rapidly declining crude oil supply from California[43], particularly from the off-shore sources in the Outer Continental Shelf which currently supplies 60 to 85 percent of the SMR's crude oil throughput — long before the Applicant submitted an application for the SMR Throughput Increase Project — and the limitations on truck import to the Santa Maria Pump Station, it is not believable that the Applicant would have sought a ten percent throughput permit increase for the SMR without simultaneously contemplating additional ways to deliver the increase in crude oil to the facility. There would be no reason to apply for an increase in the face of declining local production without a plan to supply the increase and offset known anticipated declines.

Third, information provided by Phillips 66 and its predecessor-in-interest ConocoPhillips[44] regarding its plans for continued operations of its California refineries in the rapidly changing crude oils market makes clear that import of cost-advantaged crudes, including tar sands, via rail was planned well before the SMR Throughput Increase EIR was certified. For example, John E. Lowe, Executive Vice President for Exploration and Production at ConocoPhillips (Phillips 66's), projected in 2008 — the same year the land use application for the SMR Throughput Project was submitted — that Canadian tar sands would become an important replacement for the by then well-known decline in California crude oil production: ABJC-31 (cont.)

> *The Canadian oil sands are projected to become an increasingly important source of oil for the United States, particularly considering recent declines in heavy oil production in* Mexico, Venezuela and *California*. The Canadian oil sands are projected to approach 20 percent of U.S. oil supplies by 2020.
>
> ConocoPhillips has a leading land position in the Canadian Athabasca oil sands and is actively investing to produce this oil, and then transport it to the United States for processing at our refineries. We have access to over 15 billion barrels of net potential oil resources, and plans are in place to increase our net production to about 400,000 barrels per day over the next decade. In 2008 alone, we are spending $900 million in development capital on the Canadian oil sands.[45]

---

[43] *See*, for example, California Energy Commission, California Crude Oil Production and Imports, CEC-600-2006-006, April 2006, Figure 2, p. 4; http://www.energy.ca.gov/2006publications/CEC-600-2006-006/CEC-600-2006-006.PDF; and California Energy Commission, Transportation Energy Forecasts and Analyses for the 2009 Integrated Energy Policy Report, CEC-600-2010-002-SF, May 2010, p. 6; http://www.energy.ca.gov/2010publications/CEC-600-2010-002/CEC-600-2010-002-SF.PDF.

[44] Phillips 66 debuted as an independent energy company when ConocoPhillips spun off its downstream assets and midstream assets in 2012. *See* http://en.wikipedia.org/wiki/Phillips_66.

[45] Testimony of John E. Lowe, Executive Vice President, Exploration and Production, ConocoPhillips, Before the Select Committee on Energy Independence and Global Warming, U.S. House of Representatives on Tuesday, April 1, 2008, p. 15, *emphasis* added, internal citations omitted;

ConocoPhillips at the time owned only two refineries in California: the San Francisco Refinery and the Los Angeles Refinery, which is comprised of the Carson and Wilmington facilities.[46]

In August 2012, Greg Garland, Phillips 66 Chairman and CEO, discussed the company's plans to address the decline in crude oil production in California:

> But clearly with the California crude decline with the demand decline in California [sic] and the high operating cost that we see in California, a really challenged environment. *And so we are working to put advantaged crudes to the front of those refineries.* We are looking at our cost structure and how we can improve our cost structure to improve those assets.[47]

In December 2012, Greg Garland, CEO of Phillips 66, explained:

ABJC-31 (cont.)

> California is a challenging operating environment from a regulatory standpoint, we do not see that changing over the midterm. And so *our opportunity to improve performance in California is really around getting advantage crudes to the front end of the California refineries, it's rail,* it's ship, it's working on optimization of the cost structure and the export capabilities of those refineries. And we'll improve them to the extent that we can.[48]

Clearly, plans for importing crude oil by rail to the company's two California refineries have been in the works for a long time and it is simply not believable that the company was unaware of its need for a rail unloading facility to deliver these advantaged crude oils for processing to the SMR.

Fourth, information contained in the Revised Draft EIR makes clear that the throughput increase at the Santa Maria Refinery could not be realized but for the crude

---

http://www.phillips66.com/EN/newsroom/other_resources/Documents/Markey_Testimony_written.pdf.

[46] Phillips 66, Refining, Western/Pacific; http://www.phillips66.com/EN/about/our-businesses/refining/Pages/western-pacific.aspx. Phillips 66 was created when ConocoPhillips spun off its downstream assets; Wikipedia, ConocoPhillips; http://en.wikipedia.org/wiki/ConocoPhillips.

[47] Thomson Reuters Streetevents, Edited Transcript, PSX - Q2 2012 Phillips 66 Earnings Conference Call, Event Date/Time: August 01, 2012, *emphasis* added; http://investor.phillips66.com/files/events/2012/Phillips%2066%20second-quarter%20earnings%202012.pdf.

[48] Thomson Reuters Streetevents, Edited Transcript, PSX - Phillips 66 First Annual Analyst Meeting, Event Date/Time: December 13, 2012; http://investor.phillips66.com/files/events/2012/PSX_Investor_Transcript_12_13.pdf.

oil that would be brought in via the new rail facility; in fact, it indicates that the refinery would be unable to even continue operating at current throughput levels if the Rail Spur Project were not implemented.

According to the Revised Draft EIR, the bulk of the crude oil currently processed at the SMR (60 to 85 percent) is delivered via pipeline from offshore platforms in the Outer Continental Shelf of Santa Barbara.[49] The remainder comes from oil fields in California, specifically, Price Canyon/Santa Maria Valley/San Joaquin Valley (5 to 20 percent), and San Ardo (5 to 10 percent). This pipeline system is currently the only way that the SMR can receive crude oil.[50] Crude oil can also be trucked to the Santa Maria Pump Station ("SMPS") and then placed into the dedicated pipeline that carries crude oil to the SMR.[51]

The Revised Draft EIR discloses that the SMR has received Canadian crude oil for about one year, specifically Kearl Lake dilbit[52] tar sands crude, which made up two to seven percent of the processed crude slate.[53] This crude oil was delivered by rail to the Paloma rail unloading terminal ("Paloma Terminal" or Paloma Station") near Bakersfield and then trucked to the Santa Maria Pump Station where it was transferred into the dedicated pipeline to the SMR.[54] ABJC-31 (cont.)

The Revised Draft EIR claims that, absent a rail terminal at the SMR, crude oil shipments via truck to the Santa Maria Pump Station could increase to 26,000 bbls/day, the current limit for the facility in the permit to operate issued by the SLOCAPCD.[55] The Revised Draft EIR cites to a "number of locations within the State" where transfer from rail to truck could also occur including the "new rail unloading facilities that have been approved in the Bakersfield area, such as Alon and All American Pipeline Company … as well as existing Paloma Terminal" and "a number of existing rail transfer facilities in California such as the one in Bakersfield and one in the Bay Area that could be used to transfer oil from rail to trucks for delivery to the SMPS."[56] This claim is not supported.

---

[49] Revised Draft EIR, pp. 2-31, p. 2-35, and 4.3-50.

[50] Revised Draft EIR, p. ES-14.

[51] Final EIR for SMR Throughput Increase EIR, p. 2-24.

[52] Dilbit is bitumen (derived from tar sands) mixed with a diluent so it can be transported by pipeline or rail. The diluent is usually a lighter hydrocarbon such as natural gas liquids or naphtha. Dilbit is also known as tar sands oil. *See* Revised Draft EIR, p. 4.13-27.

[53] Revised Draft EIR, p. 5-3.

[54] Revised Draft EIR, pp. 2-31, 2-33, and 5-3.

[55] Revised Draft EIR, pp. 5-3.

[56] Revised Draft EIR, p. 5-3.

The Paloma Station, which is operated by Delta Trading, L.P., is a small transloading facility, which handles a multitude of products including crude oil, intermediates, emulsions, aviation gasoline, jet fuel, butane, NGL, caustic, specialty chemicals, bio diesel and bio diesel feed stocks.[57] Figure 1 shows an aerial view of the facility.

Figure 1: Aerial view of Paloma Station at 17751 Millux Road, Bakersfield, California
(from: Google Maps; http://tinyurl.com/nb6t7mo)

ABJC-31 (cont.)

The Revised Draft EIR states that delivery of 19,200 barrels per day of crude (seven days per week) would require 2.5 crude oil unit trains per week to be delivered to a rail unloading terminal near Bakersfield.[58] The Paloma Station has only two split rail tracks, one with three spurs (oriented east-west) and one with two spurs (oriented

---

[57] Delta Trading, L.P, Paloma Station; http://deltatradinglp.com/operations/paloma-station/.

[58] Revised Draft EIR, p. 5-3.

north-south) which can accommodate at most 10 rail cars each. Thus, the facility cannot receive 80-car unit trains, which the Revised Draft EIR relied upon for its calculation of 2.5 trains per week. Instead, transfer of 26,000 bbl/day of crude oil at the Paloma Station would require unloading between 9.4 and 14.1 20-car unit trains per week or between 1.3 and 2.0 unit trains per day.[59] Further, delivery of crude oil to the Santa Maria Pump Station would require about 135 trucks deliveries per day.[60] While the facility has a total of 15 truck loading/unloading racks[61] only three to five appear to be dedicated racks for transloading from rail to trucks. Thus, given the configuration of the Paloma Station and the fact that the facility transloads a multitude of other products and presumably has long-standing contracts with other companies, it appears unlikely that it could reliably transload 26,000 bbls/day onto trucks for delivery to the Santa Maria Pump Station.

ABJC-31 (cont.)

Further, the Revised Draft EIR does not mention that all three of the other rail terminals it identifies as alternatives to the Paloma Station are currently being challenged. The Alon USA Energy, Inc. ("Alon") rail unloading terminal ("Alon Terminal") for which Kern County certified a Final EIR on October 9, 2014, has been challenged before the Superior Court of California, County of Kern.[62] Further, on November 19, 2014 a number of organizations provided extensive comments challenging the proposed authority to construct issued by the San Joaquin Valley Air Pollution Control District ("SJVAPCD") for the Alon Terminal.[63] The rail crude off-loading facility permitted to Bakersfield Crude Terminal, LLC, a subsidiary of Plains All American Pipeline Company, L.P.[64] ("Plains All American") and associated pipeline expansion project, for which Kern County conducted CEQA review, has not yet been issued an authority construct ("ATC") by the SJVAPCD. The SJVAPCD received

---

[59] (26,000 bbl/day)/((26,076+28105)/2) gal/rail car)(20 or 30 rail cars)/(42 gal/bbl)(7 days/week) = 9.4 to 14.1 trains per week; (26,000 bbl/day)/((26,076+28105)/2) gal/rail car)(20 or 30 rail cars)/(42 gal/bbl) = 1.3 to 2.0 trains per day.

[60] (100 truck trips/day)/(19,200 bbls/day)(26,000 bbls/day) = 135 truck trips/day. Based on Revised Draft EIR, p. 5-3: 100 truck trips per day for delivery of 19,200 bbls/day.

[61] Delta Trading, L.P, Paloma Station; http://deltatradinglp.com/operations/paloma-station/.

[62] In the Superior Court of the State of California in and for the County of Kern, Association of Irritated Residents, Center for Biological Diversity and Sierra Club vs. Kern County Board of Supervisors and Kern County Planning and Community Development Department. (Exhibit 4.)

[63] Letter from Elizabeth Forsyth, Earthjustice, Tom Frantz, Association of Irritated Residents, Kassie Siegel, Climate Law Institute, Center for Biological Diversity, Devora Ancel, Sierra Club, Beyond Oil Campaign, and Gordon Nipp, Sierra Club, Kern-Kaweah Chapter, to Arnaud Marjolett, SJVAPCD, November 19, 2014. (Exhibit 5.)

[64] U.S. Securities and Exchange Commission, Subsidiaries of Plains All American Pipeline, L.P. (as of December 31, 2012); http://www.sec.gov/Archives/edgar/data/1070423/000110465913015163/a12-27689_1ex21d1.htm.

extensive comments on the proposed permit from a number of environmental organizations requesting additional CEQA review by the SJVAPCD.[65] The only Bay Area facility currently permitted to transload crude received by rail is the Kinder Morgan rail terminal in Richmond ("Richmond Terminal"), which was issued a revised permit to operate on February 2014 by the Bay Area Air Quality Management District ("BAAQMD") without any CEQA review. The permit allows for transloading of crude oil instead of, or in addition to, the previously permitted import of ethanol for a combined total of 240 million gallons per year[66] (5.7 million bbl/year[67]). Several environmental organization filed an appeal to the Superior Court of California, San Francisco County, on November 11, 2014 to overturn a lower court's decision to dismiss the organizations' challenge of BAAQMD's revised permit to operate for the Richmond Terminal because the BAAQMD did not conduct any CEQA review for a non-ministerial permit decision, *i.e.*, adding crude oil to the products permitted for transloading at the facility.[68]

ABJC-31 (cont.)

Further, the Alon Terminal would transfer crude oil that would not be processed by the adjacent Alon Bakersfield Refinery only via pipeline to other refineries.[69,70] Like

---

[65] Letter from Elizabeth Forsyth and Diane Bailey, Natural Resources Defense Council, Denny Larson, Global Community Monitor, Bradley Angel, Greenaction for Health and Environmental Justice, Devorah Ancel, Sierra Club, Beyond Oil Campaign, Ethan Buckner, ForestEthics, Yana Garcia, Communities for a Better Environment, Ara Marderosian, Sequoia ForestKeeper, Gordon Nipp, Sierra Club, Kern-Kaweah Chapter, to Arnaud Marjollet, San Joaquin Valley Unified Air Pollution Control District, Re: Comments on Notice of Preliminary Decision for the Proposed Issuance of an Authority to Construct, May 30, 2014. (Exhibit 6.)

[66] BAAQMD, Engineering Evaluation, 2nd Addendum, Kinder Morgan Materials Service, LLC, Plant No. 19255, Application No. 25180, Permit Condition 24160.1 ("The owner shall ensure that the combined total amount of denatured ethanol and crude oil loaded at source S-1 does not exceed 240,000,000 gallons during any consecutive twelve-month period.")

[67] (240,000,000 gal/year)/(42 gal/bbl) = 5,714,285.7 bbl/year.

[68] *Communities for a Better Environment et al. vs. Bay Area Air Quality Management District*, Case No. CPF-14-513557. (Exhibit 7.)

[69] Kern County, Alon Bakersfield Refinery Crude Flexibility Project, Paramount Petroleum Corporation (PP13268), Draft Environmental Impact Report, SCH# 2013091062, May 2014, pp. 1-2 and 3-5 ("In order to accomplish the project objectives, new facilities must be installed to enable crude delivery via unit train and transfer of crude into the refinery for processing and into the existing pipeline network for transfer to other refineries."), pp. 1-33 and 6-5 ("Crude oil in excess of the refinery annual capacity of 25,550,000 barrels per year would be exported to other refineries via pipeline…"), p. 3-6 ("Improve the Refinery's ability to receive crude by rail by installing equipment and facilities to enable crude delivery via unit train and transfer of crude into the Refinery for processing and into storage tanks and the existing pipeline network for transfer to other refineries."); http://www.co.kern.ca.us/planning/pdfs/eirs/alon_flexibility_project/Alon_DEIR_Vol1.pdf.

[70] Kern County, Alon Bakersfield Refinery Crude Flexibility Project, Paramount Petroleum Corporation (PP13268), Final Environmental Impact Report, Chapter 7, Response to Comments, p. 7-170 ("The balance

the Alon Terminal, the Bakersfield Terminal would transfer crude oil delivered via trains into the existing pipeline network.[71] Neither facility would transload from rail to trucks. Thus, these facilities cannot be relied upon for crude oil deliveries to the Santa Maria Pump Station.

Clearly, the Rail Spur Project is not only required to maintain current production levels to offset the declining local production and supply of crude oil but is essential to further increase the throughput at the SMR to the permit level sought under the SMR Throughput Increase Project. Thus, the SMR Throughput Increase Project and the Rail Spur Project are directly related and should have been analyzed as one project under CEQA. Because the crude switch that would be facilitated by the Rail Spur Project and the increase in production at the SMR permitted under the Throughput Increase Project were not analyzed as one project, impacts were substantially underestimated and not adequately mitigated. ABJC-31 (cont.)

I note that the CEQA analysis for Throughput Project relied on an improper baseline – specifically, it relied on the maximum permitted throughput as the baseline instead of the actual throughput of crude oil at the refinery at the time the notice of publication ("NOP") was issued[72] – thereby substantially underestimating emissions associated with the ten percent increase crude oil processing over the existing conditions. This approach has been explicitly rejected by the courts.[73]

---

would be exported to third party refineries via pipeline at a rate of up to 150,000 barrels per day."); http://www.co.kern.ca.us/planning/pdfs/eirs/alon_flexibility_project/Alon_FEIR_Ch7_RTC.pdf.

[71] Tony Bizjak and Curtis Tate, The Sacramento Bee, Kern County Mounts Defense of Oil Train Shipments, August 24, 2014. ("The Plains terminal in outer Kern County would offload trainloads of oil from Canada, North Dakota and other Western states and transfer it to the pipeline network."); http://www.sacbee.com/news/business/article2607600.html.

[72] SMR Throughput Increase Project, Final EIR, p. 4.1-38. ("The increase beyond the baseline listed in Table 4.1-14 is the increase over the emissions from the Refinery operating at the current permitted level of 44,500 bpd (see Section 2.0, Project Description). The current permit emissions levels would be greater than 2009 levels since the crude oil throughput in 2009 was less than the permitted level. The permitted level was determined to be the baseline based on past CEQA documents prepared for the facility.")

[73] *Communities for a Better Environment v. South Coast Air Quality Management District*, (2010) 48 Cal.4th 310; http://blog.aklandlaw.com/uploads/file/Communities%20for%20a%20Better%20Environment%20v_%20South%20Coast%20Air%20Quality.pdf. ("We conclude neither the statute of limitations, nor principles of vested rights, nor the CEQA case law on which ConocoPhillips and the District rely justifies employing as an analytical baseline for a new project the maximum capacity allowed under prior equipment permits, rather than the physical conditions actually existing at the time of analysis. The District therefore abused its discretion in determining the project at issue would have no significant environmental effects compared to a baseline of maximum permitted capacity.")

Rodeo Refinery Propane Increase Project

The Revised Draft EIR, while not directly referring to the Propane Recovery Project, also denies that the Rail Spur Project would impact shipments of semi-refined products to the Rodeo Refinery:

> Prior to pipeline shipment to the Rodeo Refinery the naphtha and gas oils are stored in tanks located at the SMR. These storage tanks have vapor pressure limits are required by the San Luis Obispo County Air Pollution Control District (SLOCAPCD) permit, which limits the vapor pressure to 11 pisa [sic]. Historically, and currently the SMR tanks operate at about 10 psia (pounds per square inch absolute). These pressure limits restrict the amount of propane/butane that can be contained in naphtha and gas oils that are shipped to the Rodeo Refinery. The majority of the propane/butane that is contained in the crude oils process at the SMR ends up in the refinery fuel gas.[74]

There are several indications that the Revised Draft EIR's implied claim that the Rail Spur Project would have no effect on the operation of the Rodeo Refinery is incorrect. ABJC-31 (cont.)

First, review of the SMR's permit to operate (PTO 44-52) shows that not all storage tanks have vapor pressure limits of 11 psia. Specifically, the two recovered oil tanks (TK-100 and TK-101) and the two pressure distillate tanks (TK-550 and TK-551) appear to have no vapor pressure limits.[75] I refer to Dr. Phyllis Fox's comments on the Revised Draft EIR for further discussion of this issue.

Second, the Revised Draft EIR only discusses the vapor pressure of the semi-refined products limiting the amount of propane and butane that can be contained in naphtha and gas oils. However, as laid out in detail above, the Rail Spur Project is requisite to realize the ten percent throughput increase at the SMR permitted under the Throughput Project, and, thus, directly affects the quantity of semi-refined products that would be produced at the SMR and shipped to the Rodeo Refinery. This increased quantity of semi-refined products would result in increased propane and butane recovery at the Rodeo Refinery, which Phillips 66 must have anticipated when it applied for a permit to modify processing and ancillary equipment within the refinery and change permit conditions to enable substantially increasing the recovery of propane and butane. Thus, the Propane Recovery Project, the Throughput Increase

---

[74] Revised Draft EIR, p. 2-31.

[75] SLOCAPCD, Permit to Operate No. 44-52, Phillips 66 Company – Santa Maria Refinery, November 6, 2013.

Project, and the Rail Spur Project are directly related and interdependent and should have been subjected to collective rather than individual CEQA review.

The nexus between the three projects at the SMR and the Rodeo Refinery is laid out in detail in Dr. Fox's comments on the Revised Draft EIR as well her forthcoming comments on the Recirculated EIR for the Propane Recovery Project[76], which I hereby incorporate by reference. I concur with Dr. Fox's analysis that the changes proposed at both facilities in recent years, including the Rail Spur Project, are all inextricably linked and should therefore be analyzed as one project in order to determine the full extent of their environmental impacts. ABJC-31 (cont.)

IV. The Revised Draft EIR Fails to Adequately Characterize and Analyze Impacts Associated with the Crude Oil Slate Imported by the Rail Spur Project

Obviously in response to a number of comments received on the Draft EIR regarding the document's failure to adequately characterize the crude oil slate that could be received via the Rail Spur Project, particularly with respect to Canadian tar sands and crude oil from the Bakken formation,[77] and analyze associated impacts, the Revised Draft EIR now provides a three-page discussion in Section 2.6 titled "Crude Oil Changes from Rail Spur Project." ABJC-32

The Revised Draft EIR identifies the origin of crude oils the SMR currently receives and discusses the Rail Spur Project as "designed to handle a variety of crude oils that can be generically described as heavy, sour crudes" (crudes with API gravity[78] of approximately 20° or less and a sulfur content greater than 1.0 percent) which would

---

[76] Personal communication with Phyllis Fox, November 20, 2014.

[77] The Bakken formation is a rock unit from the Late Devonian to Early Mississippian age occupying about 200,000 square miles of the subsurface of the Williston Basin, underlying parts of Montana, North Dakota, Saskatchewan and Manitoba. Besides being a widespread prolific source rock for oil when thermally mature, significant producible oil reserves exist within the Bakken formation itself. Since 2000, the application of hydraulic fracturing and horizontal drilling technologies have caused a boom in Bakken crude oil production. By the end of 2010, production rates had outstripped the pipeline capacity to ship oil out of the Bakken oil fields. *See* Wikipedia, Bakken Formation; http://en.wikipedia.org/wiki/Bakken_formation.

[78] The American Petroleum Institute gravity, or API gravity, is a measure of how heavy or light a petroleum liquid is compared to water: if its API gravity is greater than 10°, it is lighter and floats on water; if less than 10°, it is heavier and sinks. It is used to compare the relative densities of petroleum liquids. Light crude oil is defined as having an API gravity higher than 31.1°, medium crude oil is defined as having an API gravity between 22.3° and 31.1°, heavy crude oil is defined as having an API gravity below 22.3°, and extra heavy crude oil is defined with API gravity below 10.0°.

Wikipedia, API Gravity; http://en.wikipedia.org/wiki/API_gravity.

"bring crude oils to SMR that are comparable to those historically processed at the facility, particularly with respect to sulfur concentration, metals concentration, and volume percent of crude oil fraction that is processed at the coker.[79] The Revised Draft EIR states that these crude oil would be sourced from oilfields throughout North America based on market economics and other factors[80] and identifies two Canadian tar sands dilbits, Access Western Blend and Peace River Heavy, as potential crudes that could be delivered via rail and processed at the SMR.[81] The Revised Draft EIR clarifies the refinery feedstock definition (meaning the materials that could be transported by train into the proposed facility) as excluding gaseous feeds, natural gas liquids ("NGL"), liquefied petroleum gas ("LPG"), finished refined products, and Bakken crude oil.[82] The Revised Draft EIR also discloses that the SMR received Canadian tar sands crude oils, specifically Kearl Lake dilbit, in the past year, making up 2 to 7 percent of the crude processed.[83]

ABJC-32 (cont.)

The Revised Draft EIR then goes on to list the characteristic properties of the typical crude blend and range of major crudes processed at the SMR in the past and of Access Western Blend and Peace River Heavy tar sands dilbits as a "reasonable representation of the range of crude oil types that could be processed"[84] as summarized in the excerpted table from the Revised Draft EIR below.

Table 4.3.13 Properties of Current and Potential Future Crude Oils at the Santa Maria Refinery

Property	Unit of Measure	Current SMR Operations		Potential Crude by Rail Sources	
		Typical Crude Blend	Range of Major Crude Sources	Access Western Blend	Peace River Heavy
API Gravity	°API	18.6	12.2-21.0	22.8	20.4
BTEX Percentage	Volume %	0.81	0.8-0.89	1.25	0.99
Vacuum Resid Percentage	Volume %	43	33-47	42	43
Sulfur Concentration	Weight %	4.2	2.1-5.2	4.0	5.0
Vanadium Concentration	wppm	85	71-118	190	167
Nickel Concentration	wppm	208	41-400	73	56
Total Acid Number (TAN)	mgKOH/g	1.0	0.4-4.0	1.7	2.5

1. Vacuum Resid percentages based upon available distillation curves.
2. Typical blend properties based upon 3-year average.
3. Range of major crudes represent the major sources of current crudes to the refinery and include a number of OCS and local onshore sources.
4. Both potential crudes by rail are Canadian.

Source: Data provided by Phillips 66, 2014.

---

[79] Revised Draft EIR, p. 2-34.

[80] Revised Draft EIR, pp. 1-4 and 2-22.

[81] Revised Draft EIR, pp. 2-33, and 4.12-27.

[82] Revised Draft EIR, pp. ES-5 and 1-4.

[83] Revised Draft EIR, p. 2-31.

[84] Revised Draft EIR, p. 2-33.

This description of the crude oil slate that could be delivered by the Rail Spur Project remains too vague and does not cover the spectrum of properties of crude oils that could be imported by the Rail Spur Project for processing at the SMR.

For example, while the Revised Draft EIR insists that "no Bakken crude oil would be delivered to the SMR as part of the project," the lack of a limit on vapor pressure or API gravity leaves open the possibility for Phillips 66 to import other North American light crude oils with very high API gravity and similar volatility as Bakken crude, including crude oils from the Permian Basin (West Texas) and Eagle Ford Formation (South Texas) crude oils (*see* Tables 1 and 2), which are currently experiencing skyrocketing production.[85]

ABJC-32 (cont.)

Table 1: Comparison of API gravity, sulfur content for various crude oils

Domestic Light Sweet Crudes	API Gravity	Sulfur (wt. %)	TAN (mg KOH)
Bakken (1) (2)	40 to 43*	0.1	< 0.1
WTI (4) (5)	37-42	0.42	0.28
LLS (2) (4)	36-40	0.39	0.4
Eagle Ford (2)	47.7	0.1	0.03
Eagle Ford Light (2)	58.8	0.04	0.02

(from: North Dakota Petroleum Council, The North Dakota Petroleum Council Study on Bakken Crude Properties, Bakken Crude Characterization Task Force, August 4, 2014; https://www.ndoil.org/image/cache/Bakken_Quality_Report.pdf.)
WTI = West Texas Intermediate
LLS = Light Louisiana Sweet

Table 2: Comparison of RVP and volume percentage of light ends (C2-C5) for various crude oils

	RVP (psi)	Vol. % Light Ends (C2-C5s)
LLS	4.18	3.0
WTI	5.90	6.1
Alberta Dilbit	7.18	7.30 wt. %
DJ Basin	7.82	8.0
Bakken	7.83	7.2
Eagle Ford	7.95	8.3
Brent	9.33	5.28 wt. %

(from: North Dakota Petroleum Council Study on Bakken Crude Properties, *op. cit.*)
LLS = Light Louisiana Sweet
WTI = West Texas Intermediate
DJ Basin = Denver-Julesburg Basin

---

[85] Bloomberg News, Permian Shale Boom Upending Values of Heavy and Light Crude Oil, August 21, 2014; http://www.bloomberg.com/news/2014-08-21/permian-shale-boom-upending-values-of-heavy-and-light-crude-oil.html.

As shown in Tables 1 and 2, Bakken crude, a light sweet crude oil, has a typical API gravity ranging from about 40° to 43° and a typical Reid vapor pressure ("RVP") of 7.8 pounds per square inch ("psi"); West Texas Intermediate ("WTI"), a light Permian crude oil, has a typical API gravity of 37° to 42° and an RVP of 5.9 psi; the properties of Eagle Ford crude oils vary widely and have a very high API gravity of up to 58.8° and an RVP of almost 8 psi. The Revised Draft EIR does not analyze the potential impacts of importing lighter crude oils. While the Santa Maria Refinery is "designed to handle a variety of crude oils that can be generically described as heavy, sour crudes,"[86] the import of lighter crudes, which could be blended with heavy crude oils at the refinery for processing, must be either explicitly excluded by permit limits defining a range of crude oil properties or properly analyzed.

Tar sands crude oils have a wide range of characteristics which can substantially different from the two Canadian tar sands dilbits the Revised Draft EIR presents as a "reasonable representation." Tar sands bitumen, a very heavy and highly viscous mixture of hydrocarbons, cannot be transported in its natural state and will not flow unless heated or diluted. The diluents used to blend the bitumen to allow it to flow consist of lighter hydrocarbon diluent such as condensate from gas wells, pentanes and other light products from oil refineries or gas plants, resulting in so-called dilbits, or synthetic crude oil from oil sands, resulting in so-called synbits. Typically, blended bitumen contains about 30 percent natural gas condensate or other diluents and 70 percent bitumen;[87] in so-called RailBit, the diluent makes up 15 to 20 percent. The various diluents have widely varying chemical characteristics which affect transport, unloading, and refinery operations, *e.g.*, on coke production (*see* Dr. Fox's Comments on the Initial Draft EIR, Sections IV and V), and would result in widely varying impacts, for example, with respect to air quality, public health and safety, risk of upset, etc.

ABJC-32 (cont.)

Instead, an adequate description of the crude oils that would be permitted to be imported by the Rail Spur Project must include limits for, at a minimum, API gravity, vapor pressure, and concentrations of BTEX (benzene, toluene, ethylene, xylene), nickel, vanadium, and sulfur in order to ensure that SMR operations would not result in impacts beyond those analyzed in the Revised Draft EIR, including the production of coke and sulfur, an increase in fugitive emissions when processing a lighter, more volatile crude oil, increasing the metal content of the produced coke, odors, associated health risks, risk of upset due to increased corrosion and so forth.

---

[86] Revised Draft EIR, p. 2-34.

[87] *See*, for example, Wikipedia, Oil Sands; http://en.wikipedia.org/wiki/Oil_sands; and Diluent; http://en.wikipedia.org/wiki/Diluent.

V. The Revised Draft EIR's Analyses of the Project's Operational Impacts with respect to Air Quality and Greenhouse Gases Are Flawed and Fail to Require Adequate Mitigation

The Revised Draft EIR's analyses of the Project's operational impacts with respect to air quality and greenhouse gas emissions is substantially flawed because they underestimate daily emissions from locomotives and associated health risks, improperly defer analysis of mitigation measures, and fail to identify all feasible mitigation measures.

A. The Revised Draft EIR Underestimates Daily Locomotive Emissions and Associated Health Risks

The Revised Draft EIR estimates daily locomotive emissions assuming that only one unit train would complete a roundtrip from the California border to SMR on any given day.[88] This assumption substantially underestimates peak daily emissions which would occur when several trains are in transit to the SMR for unloading or traveling back empty from the SMR to the California border. At an average line haul speed of 40 miles per hour ("mph") between the California border and the San Luis Obispo County line (~596 miles) and 20 mph between the County line and the SMR (~67 miles) roundtrip), each train would take over 33 hours to complete the roundtrip.[89] With 250 unit trains per year, or more if manifest trains deliver crude oil, it is highly unlikely that UPRR would be able to schedule trains so their travels within California have no overlap. More likely, on many days there will be several trains traveling simultaneously through California and San Luis Obispo County. ABJC-33

Further, the Revised Draft EIR assumes that only one train would be moved on site by switching engines and only one non-switching engine would be idling on site on any given day.[90] These assumptions by far underestimate peak daily emissions because they ignore the possibility that up to three trains could be in various stages of unloading or waiting to unload at the SMR unloading facility requiring more than the two assumed switching engines and resulting in more than one non-switching engine idling on any given day. The configuration of the Rail Spur Project with its five tracks has been explicitly designed, to allow for up to two full trains to temporarily be on the SMR site at one time in case a second train arrives while the first is still being unloaded.[91] Thus, up to three trains could be on site.

---

[88] *See* Revised Draft EIR, p. 4.3-43, and Appendix B, pp. B-9 and B-10.

[89] *Ibid*.

[90] *See* Revised Draft EIR, p. 4.3-43, and Appendix B, pp. B-9 and B-10.

[91] Revised Draft EIR, p. 2-10.

I prepared revised peak daily emission estimates for locomotives traveling within California conservatively assuming that three trains would be traveling simultaneously through San Luis Obispo County, four switching engines would be operating on site, and two non-switching engines would idle on site. The results are summarized and compared to the Revised Draft EIR's emission estimates in Table 3.

Table 3: Revised peak daily locomotive emissions within San Luis Obispo County compared to Revised Draft EIR emission estimates (in lbs/day)

Source	ROG	CO	NO_x	SO_2	PM_{10}	$PM_{2.5}$
Revised Draft EIR emission estimates						
Line haul	3.7	40.0	34.7	1.6	0.8	0.8
Line haul SMR to SLO	0.7	7.6	6.6	0.3	0.2	0.1
Switching	1.9	24.5	17.4	0.8	0.4	0.4
Idling	1.0	1.3	17.0	0.9	0.4	0.4
Total	**7.3**	**73.4**	**75.7**	**3.6**	**1.8**	**1.7**
Revised emission estimates						
Line haul	5.6	60.0	52.0	2.4	1.2	1.2
Line haul SMR to SLO	0.7	7.6	6.6	0.3	0.2	0.1
Switching	3.6	46.5	33.0	1.5	0.8	0.7
Idling	2.0	2.6	34.0	1.8	0.9	0.8
Total	**11.9**	**116.7**	**125.6**	**6.0**	**3.0**	**2.9**
Difference	**4.6**	**43.3**	**49.9**	**2.4**	**1.2**	**1.2**

ABJC-33 (cont.)

As shown, the Revised Draft EIR substantially underestimated peak daily locomotive exhaust emissions of NOx and PM2.5, which is diesel particulate matter. These estimates are conservative as more than three trains may be traveling simultaneously through San Luis Obispo County, more than four switching engines may be operating on site, and more than two non-switching engines may idle on site.

Finally, I note that the Revised Draft EIR claim that only 250 unit trains would delivery crude oil to the SMR annually must be either incorporated into a permit condition because the annual emissions estimates rely on this assumption or emissions estimates must be revised.

B. The Revised Draft EIR's Health Risk Assessment Substantially Underestimates Cancer and Non-cancer Risks

ABJC-34

The Revised Draft EIR presents a health risk assessment for two scenarios:

1. The current SMR operations + the Rail Spur Project + the trucks entering and leaving the SMR (and traveling offsite along Highway 1 and Willow) + increased BTEX levels but excluding the mainline locomotive emissions and

2. The current SMR operations + the Rail Spur Project + the trucks entering and leaving the SMR (and traveling offsite along Highway 1 and Willow) + increased BTEX levels + the mainline locomotive emissions.[92]

The results for these scenarios substantially underestimate health risks because they rely on the permitted throughput limit rather than the existing throughput (*see* Comment II) and fail to account for more than one train traveling within San Luis Obispo County and two switching engines operating and one non-switching engine idling on site.

ABJC-34 (cont.)

Further, the health risk assessment is based on annual emissions averaged on a per-second basis.[93] Receptors do not breathe in annual average concentrations[94] but rather instantaneous emissions of pollutants, which are even higher than peak daily emissions. This is of particular concern for diesel particulate matter, a carcinogen whose health risks were substantially underestimated by this approach.

I suggest that the County prepare a revised health risk assessment addressing the above identified issues.

C. The Revised Draft EIR Improperly Defers Analysis of Mitigation Measures and Fails to Identify all Feasible Mitigation Measures to Reduce Significant Impacts with Respect to Air Quality and Health Risks

ABJC-35

The Revised Draft EIR finds that the Project's operational emissions would substantially exceed the SLOCAPCD's thresholds of significance for ROG, NOx, and diesel particulate matter. Specifically, the Project would result in unmitigated emissions of about 770 lbs/day and 64 tons/year of ROG+NOx[95], *i.e.*, almost 31 times the District's daily significance threshold of 25 lbs/day and more than 2.5 times the annual significance threshold of 25 tons/year.[96] The Project would also result in emissions of more than 30 lbs/day of diesel particulate matter,[97] *i.e.*, more than 24 times the District's significance threshold of 1.25 lbs/day.[98]

---

[92] Revised Draft EIR, p. 4.3-61.

[93] *See* (total switching and idling emissions in tons/year)

[94] *See* Revised EIR, Appx. B, Modeling Inputs: Switching and Idling Emissions.

[95] *See* Revised Draft EIR, Table 4.3-14, p. 4.3-47. ((700.72 lbs/day) + (71.03 lbs/day) = 771.8 lbs/day) and ((60.06 lbs/day) + (4.20 lbs/day) = 64.3 lbs/day

[96] (771.8 lbs/day)/(25 lbs/day) = 30.9; (64.3 tons/year)/(25 tons/year) = 2.6.

[97] *Ibid.*

[98] (30.45 lbs/day) / (1.25 lbs/day) = 24.4.

The Revised Draft EIR finds that limiting idling time on site and the use of Tier 4 locomotive engines would reduce emissions of ROG+NOx to 93.6 lbs/day,[99] which is still far above the District's daily significance threshold. To further reduce ROG and NOx emissions from the locomotives, the Revised Draft EIR proposes Mitigation Measure AQ-2a:

> Prior to issuance of Notice to Proceed, the Applicant shall investigate methods for reducing the onsite and offsite emissions, both from fugitive components and from locomotives. In addition, locomotive emissions shall be mitigated to the extent feasible through contracting arrangements that require the use of Tier 4 locomotives or equivalent emission levels. If emissions of ROG+NOx and DPM with the above mitigations still exceed the thresholds, as measured and confirmed by the SLOCAPCD, the Applicant shall secure SLOCAPCD-approved onsite and/or offsite emission reductions in ROG + NOx and DPM emissions to ensure that project-related ROG + NOx and DPM emissions within SLO County do not exceed the SLOCAPCD thresholds for the life of the project. Coordination with the SLOCAPCD should begin at least six (6) months prior to issuance of the Notice to Proceed for the Project to allow time for refining calculations and for the SLOCAPCD to review and approve any required ROG+NOx and DPM emission reductions.[100]

ABJC-35 (cont.)

To further reduce diesel particulate matter emissions from the locomotives, the Revised Draft EIR proposes Mitigation Measure AQ-3:

> Prior to issuance of the Notice to Proceed, the Applicant shall investigate methods for reducing the locomotive emissions through contracting arrangements that require the use of Tier 4 locomotives or equivalent emission levels. If the mainline rail emissions of ROG+NOx and DPM with the above mitigations still exceed the applicable Air District thresholds, the Applicant shall secure emission reductions in ROG + NOx and DPM emissions within each applicable Air District, similar to the emission reduction program utilized by the SLOCAPCD, to ensure that the main line rail ROG + NOx and DPM emissions do not exceed the Air District thresholds for the life of the project. The Applicant shall provide documentation from each Air District to the San Luis Obispo County Planning and Building Department that emissions reductions have been secured for the life of the project prior to issuance of the Notice to Proceed.[101]

---

[99] Draft EIR, p. 4.3-45.

[100] Revised Draft EIR, pp. 4.3-47 and 4.3-48.

[101] Revised Draft EIR, p. 4.3-53.

Both proposed mitigation measures impermissibly defer analysis without providing specific performance standards capable of mitigating the Project's impacts to below significance.

Offsets, *i.e.*, credits for emission reductions that occurred somewhere within the SLOCAPCD's jurisdiction in the past, have no effect on present-day emissions and should not be considered valid CEQA mitigation. Residents near the Project site breathe present-day emissions, which will increase as a result of the Project; the impacts on their health are not lessened by money changing hands for emission reductions that occurred somewhere else and in the past. This is particularly true for diesel particulate matter emissions, which by far exceed health risk thresholds established by the SLOCAPCD.

Further, the proposed mitigation measures are not stringent enough and the Revised Draft EIR fails to evaluate all feasible mitigation measures.

The County should investigate the potential for on-site emission reductions. On-site mitigation could *e.g.*, include installation of additional and/or more efficient control technologies on existing units at the Santa Maria Refinery and replacement of older emission units. This could include replacement of leaking components with leakless components, replacement of low-NOx burners with ultra-low NOx burners on all fired sources, or replacement of any older, high-emitting equipment best available control technology ("BACT") regardless of cost-efficiency. (Off-site mitigation could include similar measures, *e.g.*, installing a vapor recovery system and replacement of leaking components at the Santa Maria Pump Station.) ABJC-35 (cont.)

In addition, the County must require use of best available control technology for emissions from unloading the rail cars. The Revised Draft EIR proposes to use carbon canisters with a removal efficiency of at least 95 percent.[102] This does not constitute BACT. First of all, carbon adsorption does not uniformly remove the same percentage of all pollutants; some compounds adsorb more readily than others. Therefore, carbon canisters are specified depending on the application and composition of the vapors that need to be controlled. Manufacturers will specify a removal efficiency for specific compounds at a certain concentration in the vapor and a certain air flow. Further, carbon canisters, which are not regenerative, have a high removal efficiency until saturation when the effluent concentration will suddenly increase, a behavior known as "breakthrough." Thus carbon canisters must be closely and continually monitored. The Draft EIR does not indicate any such monitoring. More efficient systems than carbon canisters are available for rail terminals including, for example, vapor recovery units ("VRUs") with two sets of carbon beds that can be alternately regenerated and are

---

[102] Revised Draft EIR, pp. 4.3-43.

monitored by continuous emissions monitoring systems ("CEMS"). According to one manufacturer, John Zink: "In typical installations such as truck, rail, tank and marine loading, our VRUs achieve emission control efficiencies of 99% or better.[103] The County should require an analysis of all feasible vapor removal systems and require installation of a BACT-compliant system. This analysis must include an evaluation of the various crude oils that could be imported to the facility under the Rail Spur Project.

ABJC-35 (cont.)

To mitigate the impacts caused by diesel particulate matter emissions from locomotives, the County should require electrification of all on-site switching locomotives, or at the very least, require that these engines meet Tier 4 emission standards established by the U.S. Environmental Protection Agency ("EPA"). Other measures that should be evaluated include the installation of portable diesel particulate filters as soon as trains enter the facility or enclosing the entire rail unloading facility and venting emissions to pollution control equipment.

D. The Revise Draft EIR Fails Adequately Mitigate Significant Greenhouse Gas Emissions

The Revised Draft EIR fins significant and unavoidable impacts due to GHG emissions after implementation of mitigation measure AQ-6, which requires that the Applicant provide GHG emission reduction credits for all Project GHG emissions within San Luis Obispo County for the life of the project.[104] (Again, this mitigation measure improperly defers analysis to the future.) This mitigation measure is inadequate. Before resorting to emission reduction credits and finding significant unavoidable impacts, the County must evaluate all feasible mitigation to reduce emissions, preferably on site.

ABJC-36

The SLOCAPCD's CEQA Guidelines provide a long list of mitigation measures to reduce emission of greenhouse gases from projects including industrial projects. In addition, the CAPCOA has published guidance for quantifying greenhouse mitigation measures.[105] Many of the mitigation measures mentioned in these documents are feasible for the Rail Spur Project and should be required to reduce its significant GHG

---

[103] *See*, for example, John Zink, Carbon Adsorption Vapor Recovery Systems; http://www.johnzink.com/wp-content/uploads/carbon-adsorption-vapor.pdf.

[104] Revised Draft EIR, p. 4.3-71.

[105] CAPCOA, Quantifying Greenhouse Gas Mitigation Measures, A Resource for Local Government to Assess Emission Reductions from Greenhouse Gas Mitigation Measures, August, 2010; http://www.capcoa.org/wp-content/uploads/2010/11/CAPCOA-Quantification-Report-9-14-Final.pdf.

emissions.[106] I recommend that the County evaluate and require all feasible mitigation to reduce significant impacts with respect to global climate change due to GHG emissions associated with the proposed operational changes at the SMR including the Rail Spur Project and the SMR Throughput Increase Project. ABJC-36 (cont.)

Finally, because GHGs are global pollutants, the County may not stop at mitigating only emissions within its boundaries. Instead, the Applicant should be required to mitigate all emissions within North America.

VI. The Revised Draft EIR's Odor Analysis Is Deficient

The Revised Draft EIR recognizes that operation of the Rail Spur Project may result in odor impacts due to fugitive emissions of hydrocarbons and hydrogen sulfide ("H_2S") from equipment leaks, the vapor recovery carbon canisters, and accidental spills of crude oil as well as diesel exhaust emissions from the locomotives.[107] The Revised Draft EIR's odor analysis and proposed mitigation for these emission sources is deficient, as discussed below.

First, while the Revised Draft EIR recognizes diesel exhaust emissions from the locomotives as potential odor sources, it fails entirely to provide a discussion, let alone a quantitative analysis, of associated odor impacts. The odor of diesel exhaust is considered by most people to be objectionable and EPA found that, at high intensities, diesel exhaust may produce sufficient physiological and psychological effects to warrant concern for public health.[108] Clouds of soot from diesel-powered engines, such as the Project's locomotives when in transit or idling, can travel downwind for miles and drift into heavily populated areas.[109] Here, trains would pass directly by numerous densely populated residential neighborhoods en route to the SMR, which could cause odor nuisance for receptors located within these neighborhoods. ABJC-37

Second, in addition to H_2S, crude oils contain various amounts of other odiferous sulfur compounds, including mercaptans, which are known for their very strong and

---

[106] SLOCAPCD, CEQA Air Quality Handbook, A Guide for Assessing the Air Quality Impacts for Projects Subject to CEQA Review, April 2012, Table 3-5 Mitigation Measures, pp. 3-17 through 3-20; http://www.slocleanair.org/images/cms/upload/files/CEQA_Handbook_2012_v1.pdf.

[107] Revised Draft EIR, pp. 4.3-71.

[108] EPA, Health Assessment Document for Diesel Engine Exhaust, EPA/600/8-90/057F, May 2002; http://www.epa.gov/ttn/atw/dieselfinal.pdf.

[109] Union of Concerned Scientists, Digging Up Trouble, The Health Risk of Construction Pollution in California, November 2006; http://www.ucsusa.org/assets/documents/clean_vehicles/digging-up-trouble.pdf.

unpleasant odors. The odor threshold for most mercaptans is considerably less than 0.5 parts per billion ("ppb"); some mercaptans can be detected at concentrations as low as 0.029 ppb.[110] In fact, mercaptans are added to natural gas in very tiny amounts so that the gas can be smelled to facilitate detecting leaks. Information available for Canadian crudes indicates that diluents can contain more than 100 parts per million ("ppm") of volatile mercaptans.[111] The County should prepare an analysis of potential odor impacts resulting from odiferous sulfur compounds other than H_2S contained in the fugitive emissions from equipment leaks and from accidental spills to adequately disclose potential odor impacts. ABJC-37 (cont.)

Third, the Revised Draft EIR analyzes only equipment leaks from new components associated with the Rail Spur Project and entirely fails to analyze odor impacts resulting from the change in crude oil slate at the existing SMR including the tank farm. The crude oil brought in by rail could be considerably more odiferous than the crude currently processed. Given that the nearest receptor is located only 425 feet northeast and the closest residence is located only 1,200 feet northeast of the crude oil storage tanks[112], it is likely that change in crudes may affect these receptors.

VII. The Draft EIR Fails to Analyze Potentially Significant Health Impacts Due to Valley Fever and Fails to Require Adequate Mitigation

I previously commented on the Initial Draft EIR's utter lack of an analysis of potential health impacts posed by Valley Fever. The Revised Draft EIR continues to ignore this issue despite several past outbreaks of the disease in San Luis Obispo County. ABJC-38

Valley Fever, or coccidioidomycosis (short cocci), is an infectious disease caused by inhaling the spores of *Coccidioides ssp.*[113], a soil-dwelling fungus. Spores, or arthroconidia, are released into the air when infected soils are disturbed, *e.g.*, by construction activities, agricultural operations, dust storms, or during earthquakes. The disease is endemic (native and common) in the semiarid regions of the southwestern United States. San Luis Obispo County, including the Project site, is located within the

---

[110] Syneco Systems, Inc., Odor Perception, 2009; http://www.synecosystems.com/wp/PDF/151.pdf.

[111] crudemonitor.ca, 2014; http://www.crudemonitor.ca/home.php.

[112] Revised Draft EIR, p. 4.7-15.

[113] Two species of *Coccidioides* are known to cause Valley Fever: *C. immitis*, which is typically found in California, and *C. posadasii*, which is typically found outside California. *See* Center for Disease Control, Coccidioidomycosis (Valley Fever), Information for Health Professionals; http://www.cdc.gov/fungal/coccidioidomycosis/health-professionals.html.

established endemic range of Valley Fever, as shown in Figure 2 below, and the disease has become an increasing concern for health officials in San Luis Obispo County.[114]

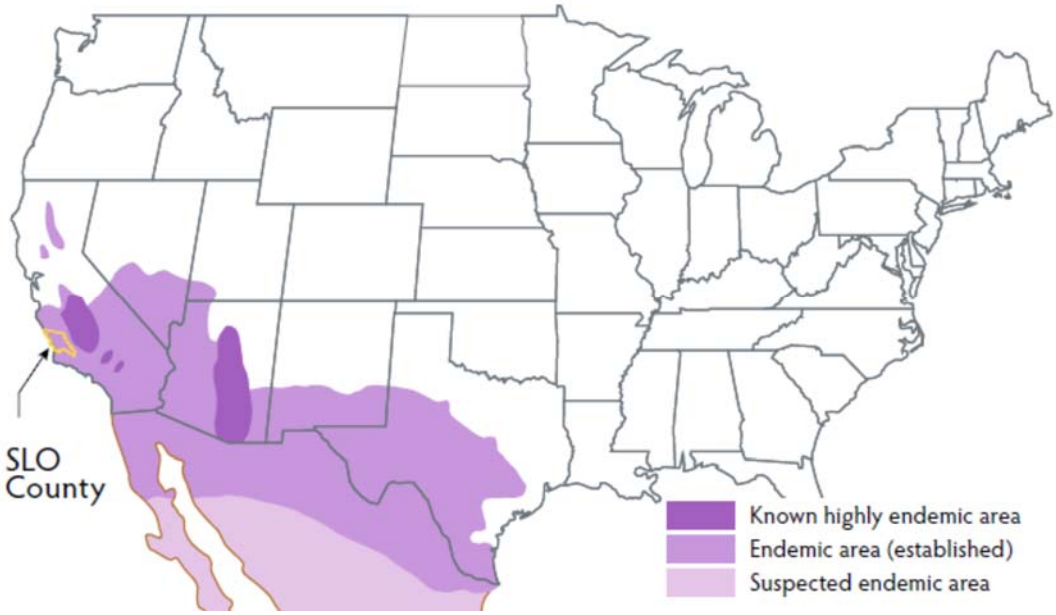

Figure 2: Endemic areas for Valley Fever in the U.S.
(from: San Luis Obispo County Public Health Department, What Is Valley Fever? July 20, 2011; http://www.slocounty.ca.gov/Assets/PH/Epidemiology/ValleyFever_Info.pdf)

ABJC-38 (cont.)

Typical symptoms of Valley Fever include fatigue, fever, cough, headache, shortness of breath, rash, muscle aches, and joint pain. Symptoms of advanced Valley Fever include chronic pneumonia, meningitis, skin lesions, and bone or joint infections. The most common clinical presentation of Valley Fever is a self-limited acute or subacute community-acquired pneumonia that becomes evident 13 weeks after infection.[115] No vaccine or known cure exists for the disease.[116] Between 1990 and 2008, more than 3,000 people have died in the United States from Valley Fever with about

---

[114] San Luis Obispo County Public Health Department, What Is Valley Fever? July 20, 2011; http://www.slocounty.ca.gov/Assets/PH/Epidemiology/ValleyFever_Info.pdf.

[115] *See, e.g.*, Lisa Valdivia, David Nix, Mark Wright, Elizabeth Lindberg, Timothy Fagan, Donald Lieberman, Prien Stoffer, Neil M. Ampel, and John N. Galgiani, Coccidioidomycosis as a Common Cause of Community-acquired Pneumonia, Emerging Infectious Diseases, v. 12, no. 6, June 2006; http://europepmc.org/articles/PMC3373055.

[116] Rebecca Plevin, National Public Radio, Cases Of Mysterious Valley Fever Rise In American Southwest, May 13, 2013; http://www.npr.org/blogs/health/2013/05/13/181880987/cases-of-mysterious-valley-fever-rise-in-american-southwest.

half in California.[117] In recent years, reported Valley Fever cases in the Southwest have increased dramatically.[118] Cases of Valley Fever in San Luis Obispo County have more than doubled over the past few years from 87 reported cases in 2009 to 225 cases in 2011. [119] In 2013, San Luis Obispo County experienced two major outbreaks at construction sites for solar facilities.[120]

The Draft EIR makes no mention whatsoever of the potential health risks posed by Valley Fever from construction and/or operation of the Rail Spur Project and does not require any mitigation to limit the public's or workers' potential exposure to cocci. Thus, the Draft EIR utterly fails to inform the public of the significant consequences of Project construction and feedstock production. This failure violates CEQA. As a result, the Draft EIR must be amended to provide this significant new information, requiring recirculation for public review. ABJC-38 (cont.)

At-risk Populations

Dust exposure is one of the primary risk factors for contracting Valley Fever.[121] Specific occupations and outdoor activities associated with dust generation such as construction, farming, road work, military training, gardening, hiking, camping, bicycling, or fossil collecting increase the risk of exposure and infection. The risk appears to be more specifically associated with the amount of time spent outdoors than with doing specific activities.[122] The most at-risk populations are construction and

---

[117] Jennifer Y. Huang, Benjamin Bristow, Shira Shafir, and Frank Sorvillo, Coccidioidomycosis-associated Deaths, United States, 1990–2008; http://www.ncbi.nlm.nih.gov/pmc/articles/PMC3559166/.

[118] *See* Center for Disease Control; Fungal Pneumonia: A Silent Epidemic, Coccidioidomycosis (Valley Fever); http://www.cdc.gov/fungal/pdf/cocci-fact-sheet-sw-us-508c.pdf.

[119] Cal Coast News, Valley Fever Outbreak Strikes Solar Power Plant Workers, May 1, 2013; http://calcoastnews.com/2013/05/valley-fever-outbreak-strikes-solar-power-plant-workers/.

[120] Julie Cart, Los Angeles Times, Officials Study Valley Fever Outbreak at Solar Power Projects, April 30, 2013; http://articles.latimes.com/2013/apr/30/local/la-me-solar-fever-20130501.

[121] Rafael Laniado-Laborin, Expanding Understanding of Epidemiology of Coccidioidomycosis in the Western Hemisphere, Ann. N.Y. Acad. Sci., v. 111, 2007, pp. 20-22; Frederick S. Fisher, Mark W. Bultman, Suzanne M. Johnson, Demosthenes Pappagianis, and Erik Zaborsky, Coccidioides Niches and Habitat Parameters in the Southwestern United States, a Matter of Scale, Ann. N.Y. Acad. Sci., No. 1111, 2007, pp. 47-72 ("All of the examined soil locations are noteworthy as generally 50% of the individuals who were exposed to the dust or were excavating dirt at the sites were infected."); http://www.researchgate.net/publication/6461426_Coccidioides_niches_and_habitat_parameters_in_the_southwestern_United_States_a_matter_of_scale/file/72e7e51c9b9f058a45.pdf?origin=publication_detail.

[122] *See* Center for Disease Control, Coccidioidomycosis (Valley Fever); http://www.cdc.gov/fungal/coccidioidomycosis/, accessed August 21, 2013; and Kern County Public

agricultural workers,[123] the very populations that would be directly exposed by the Project. A refereed journal article on occupational exposures notes that "[l]abor groups where occupation involves close contact with the soil are at greater risk, especially if the work involves dusty digging operations."[124] One study reported that at study sites, "generally 50% of the individuals who were exposed to the dust or were excavating dirt at the sites were infected."[125]

The disease debilitates the population and thus prevents them from working.[126] The longest period of disability from occupational exposure in California is to construction workers, with 62% of the reported cases resulting in over 60 days of lost work.[127] Another study estimated the average hospital stay for each (non-construction work) case of coccidioidomycosis at 35 days.[128] Further, the potentially exposed population is much larger than construction and agricultural workers because the non-selective raising of dust during Project construction will carry the very small spores – 0.002-0.005 millimeters ("mm") (*see* Figure 3) – into non-endemic areas, potentially exposing large non-Project-related populations.[129,130]

ABJC-38 (cont.)

Health Services Department, Valley Fever (Coccidioidomycosis) in Kern County; http://kerncountyvalleyfever.com/.

[123] Lawrence L. Schmelzer and R. Tabershaw, Exposure Factors in Occupational Coccidioidomycosis, Am. J. Public Health Nations Health, v. 58, no. 1, 1968, pp. 107-113, Table 3; http://www.ncbi.nlm.nih.gov/pmc/articles/PMC1228046/?page=1

[124] *Ibid*, p. 110.

[125] Fisher et al., 2007.

[126] Frank E. Swatek, Ecology of *Coccidioides Immitis*, Mycopathologia et Mycologia Applicata, V. 40, Nos. 1-2, pp. 3-12, 1970.

[127] Schmelzer and Tabershaw, 1968, Table 4.

[128] Demosthenes Pappagianis and Hans Einstein, Tempest from Tehachapi Takes Toll or Coccidioides Conveyed Aloft and Afar, West J. Med., v. 129, Dec. 1978, pp. 527-530; http://www.ncbi.nlm.nih.gov/pmc/articles/PMC1238466/pdf/westjmed00256-0079.pdf.

[129] Schmelzer and Tabershaw, 1968, p. 110; Pappagianis and Einstein, 1978.

[130] Pappagianis and Einstein, 1978, p. 527 ("The northern areas were not directly affected by the ground level windstorm that had struck Kern County but the dust was lifted to several thousand feet elevation and, borne on high currents, the soil and arthrospores along with some moisture were gently deposited on sidewalks and automobiles as "a mud storm" that vexed the residents of much of California." The storm originating in Kern County, for example, had major impacts in the San Francisco Bay Area and Sacramento).

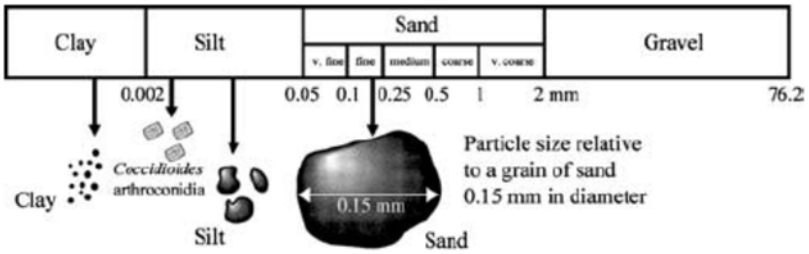

Figure 3: Size of cocci spores compared to soil particles (in mm)
(from: Fisher et al., 2007, Fig. 3)

Valley Fever spores have been documented to travel as much as 500 miles[131] and, thus, dust raised during construction could potentially expose a large number of people hundreds of miles away.

"Hispanics, Asians, and Native Americans are often considered to suffer from Valley Fever with the worst symptoms more often than Caucasians."[132] The most recent California Department of Public Health report indicates that Hispanics accounted for more than a quarter of all reported cases statewide in 2012, the last year for which data was recorded.[133] One study speculated that "[t]he use of transient farm laborers in the San Joaquin Valley and the gradual westward movement in the U.S.A. has produced a steady supply of susceptible individuals."[134] The 2010 Census indicates that 20.8% of the population is Hispanic in San Luis Obispo County; Hispanics are therefore likely to be present in the work force.[135] ABJC-38 (cont.)

Other risk factors include diabetes, malnutrition and socioeconomic status. "Even the risk of 'socioeconomic status' with an annual income below $15,000 was seen to be a risk factor for the most serious Valley Fever conditions. This finding may be due to any number of reasons, from increased likelihood to work in dusty environments where high doses of spores could be inhaled, to a lack of ability to pay for medical care and thus only visiting doctors when symptoms are at their worst."[136] San Luis Obispo

---

[131] David Filip and Sharon Filip, Valley Fever Epidemic, Golden Phoenix Books, 2008, p. 24.

[132] Filip and Filip, 2008, p. 29.

[133] California Department of Public Health, Coccidioidomycosis Yearly Summary 2012, p. 4; available at http://www.cdph.ca.gov/programs/sss/Documents/COCCI-UPDATED2012YEARLY.pdf.

[134] Swatek, 1970, p. 5.

[135] California Demographics by Cubit, San Luis Obispo County Demographics Summary; available at http://www.california-demographics.com/san-luis-obispo-county-demographics.

[136] Filip and Filip, 2008, pp. 33, 37.

County has a poverty rate of 12.9%,[137] again indicating a high proportion of sensitive populations.

The Revised Draft EIR fails to inform the public of the potential significant consequences of Project construction and fails to address the associated environmental justice issues. The County should amend and recirculate the Revised Draft EIR to provide an adequate assessment of Valley Fever and propose adequate mitigation.

A Conventional Dust Control Plan Is Inadequate to Address Potential Health Risks Posed by Exposure to Valley Fever

Conventional dust control measures that would be included in the mitigation measures for the Rail Spur Project pursuant to SLOCAPCD's CEQA Guidelines[138] are not effective at controlling Valley Fever[139] as they largely focus on visible dust. While dust exposure is one of the primary risk factors for contracting Valley Fever and dust-control measures are an important defense against infection, it is important to note that visible dust is only an indicator that *Coccidioides ssp.* spores may be airborne in a given area. Freshly generated dust clouds usually contain a larger proportion of the more visible coarse particles. However, these larger particles settle more rapidly and the remaining fine respirable particles may be difficult to see. ABJC-38 (cont.)

Spores of *Coccidioides ssp.* have slow settling rates in air due to their small size (2 to 5 micrometers), low terminal velocity, and possibly also due to their buoyancy, barrel shape and commonly attached empty hyphae cell fragments.[140] Thus spores, whose size is well below the limits of human vision, may be present in air that appears relatively clear and dust free. Such ambient, airborne spores with their low settling rates can remain aloft for long periods and be carried hundreds of kilometers from their point of origin. Thus, implementation of dust control measures only when visible dust is present will not provide sufficient protection for both site workers and the general public.

---

[137] California Demographics by Cubit, 2013; http://www.california-demographics.com/.

[138] Revised Draft EIR, Mitigation Measure AQ-1f, p. 4.3-3p.

[139] *See, e.g.*, Cummings and others, 2010, p. 509; Schneider et al., 1997, p. 908 ("Primary prevention strategies (*e.g.*, dust-control measures) for coccidioidomycosis in endemic areas have limited effectiveness.").

[140] Frederick S. Fisher, Mark W. Bultman, and Demosthenes Pappagianis, Operational Guidelines (version 1.0) for Geological Fieldwork in Areas Endemic for Coccidioidomycosis (Valley Fever), U.S. Geological Survey Open-File Report 00-348, 2000; http://geopubs.wr.usgs.gov/open-file/of00-348/of00-348.pdf.

Further, infections by *Coccidioides ssp.* frequently have a seasonal pattern with infection rates that generally spike in the first few weeks of hot dry weather that follow extended milder rainy periods. In California, infection rates are generally higher during the hot summer months especially if weather patterns bring the usual winter rains between November and April.[141] The majority of cases of Valley Fever accordingly occur during the months of June through December. Typically, the risk of catching Valley Fever begins to increase in June and continues an upward trend until it peaks during the months of August, September and October.[142] Drought periods can have an especially potent impact on Valley Fever if they follow periods of rain.[143] It is thought that during drought years the number of organisms competing with *Coccidioides ssp.* decreases and the fungus remains alive but dormant. When rain finally occurs, the arthroconidia germinate and multiply more than usual because of a decreased number of other competing organisms. When the soil dries out in the summer and fall, the spores can become airborne and potentially infectious.[144] The current drought conditions in California, officially declared as a State of Emergency by Governor Brown on January 17, 2013[145], may well increase the occurrence of Valley Fever cases. Thus, major onsite and offsite soil-disturbing construction activities should be timed to occur outside of a prolonged dry period. After soil-disturbing activities conclude, all disturbed soils should be sufficiently stabilized to prevent air-borne dispersal of cocci spores.

ABJC-38 (cont.)

Recommended Measures to Reduce Risk of Valley Fever

In response to an outbreak of Valley Fever in construction workers in 2007 at a construction site for a solar facility within its jurisdiction, the County's Public Health Department in conjunction with the California Department of Public Health developed recommendations to limit exposure to Valley Fever based on scientific information from the published literature. The recommended measures go far beyond the conventional dust control measures recommended in the Revised Draft EIR for the Rail Spur Project:

---

[141] *Ibid*.

[142] Kern County Public Health Services Department, What Is Valley Fever, Prevention, Valley Fever Risk Factors; http://kerncountyvalleyfever.com/what-is-valley-fever/risk-factors/.

[143] Gosia Wozniacka, Associated Press, Fever Hits Thousands in Parched West Farm Region, May 5, 2013, citing Prof. John Galgiani, Director of the Valley Fever Center for Excellence at the University of Arizona; http://abcnews.go.com/m/story?id=19113795.

[144] Theodore N. Kirkland and Joshua Fierer, Coccidioidomycosis: A Reemerging Infectious Disease, Emerging Infectious Diseases, Vol. 3, No. 2, July-September 1996; http://www.ncbi.nlm.nih.gov/pmc/articles/PMC2626789/pdf/8903229.pdf.

[145] State of California, Office of Governor Edmund G. Brown, Governor Brown Declares Drought State of Emergency, January 17, 2013; http://gov.ca.gov/home.php.

1. *Implement comprehensive Injury and Illness Prevention Program (required by Title 8, Section 3203) ensuring safeguards to prevent Valley Fever are included.*
2. *Work with a medical professional with expertise in cocci to develop a training program for all employees discussing the following issues: potential presence of C. immites in soils; the risks involved with inhaling spores; how to recognize common symptoms (which resemble common viral infections, and may include fatigue, cough, chest pain, fever, rash, headache, and body and joint ache); requesting prompt reporting of suspected symptoms to a supervisor and health care provider; discussing worker entitlement to receive prompt medical care if they suspect symptoms of work-related Valley Fever; and requesting the use of personal protection measures as outlined below.*
3. *Control exposure to dust:*
   - Consult with local Air Pollution Control District Compliance Assistance programs and with California Occupational Safety and Health Administration ("Cal/OSHA") compliance program regarding meeting the requirements of dust control plans and for specific methods of dust control. These methods may include wetting the soil while ensuring that the wetting process does not raise dust or adversely affect the construction process.
   - Provide high-efficiency particulate ("HEP")-filtered, air-conditioned enclosed cabs on heavy equipment. Train workers on proper use of cabs, such as turning on air conditioning prior to using the equipment.
   - Provide communication methods, such as 2-way radios, for use in enclosed cabs.
   - Provide National Institute for Occupational Safety and Health ("NIOSH")-approved respirators for workers without a prior history of Valley Fever.
   - Half-face respirators equipped with N-100 or P-100 filters should be used during digging. Employees should wear respirators when working near earth moving machinery.
   - Employees should be medically evaluated, fit-tested, and properly trained on the use of the respirators, and a full respiratory protection program in accordance with the applicable Cal/OSHA Respiratory Protection Standard (8 CCR 5144) should be in place.
   - Prohibit eating and smoking at the worksite, and provide separate, clean eating areas with hand-washing facilities.
   - Avoid outdoor construction operations during unusually windy conditions.
   - Consider limiting outdoor construction during the fall to essential jobs only, as the risk of cocci infection is higher during this season.

ABJC-38 (cont.)

4. *Prevent transport of cocci outside endemic areas:*
   - Thoroughly clean equipment, vehicles, and other items before they are moved off-site to other work locations.
   - Provide workers with coveralls daily, lockers (or other system for keeping work and street clothing and shoes separate), daily changing and showering facilities.
   - Clothing should be changed after work every day, preferably at the work site.
   - Train workers to recognize that cocci may be transported offsite on contaminated equipment, clothing, and shoes; alternatively, consider installing boot-washing.
   - Post warnings onsite and consider limiting access to visitors, especially those without adequate training and respiratory protection.

5. *Improve medical surveillance for employees*
   - Employees should have prompt access to medical care, including suspected work-related illnesses and injuries.
   - Work with a medical professional to develop a protocol to medically evaluate employees who have symptoms of Valley Fever.
   - Consider preferentially contracting with 1-2 clinics in the area and communicate with the health care providers in those clinics to ensure that providers are aware that Valley Fever has been reported in the area. This will increase the likelihood that ill workers will receive prompt, proper and consistent medical care.
   - Respirator clearance should include medical evaluation for all new employees, annual re-evaluation for changes in medical status, and annual training, and fit-testing.
   - Please note that skin testing is not recommended for evaluation of Valley Fever.
   - If an employee is diagnosed with Valley Fever, a physician must determine if the employee should be taken off work, when they may return to work, and what type of work activities they may perform.[146]

ABJC-38 (cont.)

[146] San Luis Obispo County Health Agency, Recommendations for Workers to Prevent Infection by Valley Fever in SLO County; http://www.slocounty.ca.gov/Assets/PH/Epidemiology/Cocci+Recomendations.pdf.

Two other studies have developed complementary recommendations to minimize the incidence of Valley Fever. The U.S. Geological Survey ("USGS") has developed recommendations to protect geological field workers in endemic areas.[147] An occupational study of Valley Fever in California workers also developed recommendations to protect those working and living in endemic areas.[148] These two sources identified the following measures, in addition to those identified by the County's Public Health Department, to minimize exposure to Valley Fever:

- Pretest soils to determine if each work location is within an endemic area.
- Implement a vigorous program of medical surveillance.
- Implement aggressive enforcement of respiratory use where exposures from manual digging are involved.
- Test all potential employees for previous infection to identify the immune population and assign immune workers to operations involving known heavy exposures.
- Hire resident labor whenever available, particularly for heavy dust exposure work.
- All workers in endemic areas should use dust masks to protect against inhalation of particles as small as 0.4 microns. Mustaches or beards may prevent a mask from making an airtight seal against the fact and thus should be discouraged.
- Establish a medical program, including skin tests on all new employees, retesting of susceptibles, prompt treatment of respiratory illness in susceptibles; periodic medical examination or interview to discover a history of low grade or subclinical infection, including repeated skin testing of susceptibles.

ABJC-38 (cont.)

All of the above health-protective measures recommended by the County's Public Health Department and the two cited studies are feasible for the Rail Spur Project and must be required in an enhanced dust control plan to reduce the risk for construction workers, on-site employees and the public of contracting Valley Fever. Even if all the above measures are adopted, a recirculated Draft EIR is required to analyze whether these measures are adequate to reduce this significant impact to a level below significance.

---

[147] Fisher et al. 2000.

[148] Schmelzer and Tabershaw, 1968, pp. 111 - 113.

VIII. Recommendation

Based on the above discussion, I find that the Revised Draft EIR for the Rail Spur Project remains substantively deficient as an informational document under CEQA and recommend that the County revise the EIR to addresses the issues outlined above and recirculate the document for public review.

Due to the very short turnaround time for this comment letter, I was unable to address all issues including some that rely on documents supporting the air quality analysis, which are not provided in the Revised Draft EIR, and were not made available until November 18, 2014, only six days before close of the comment period. I am also still waiting for the response to public records act requests to the SLOCAPCD and SJVAPCD. I may submit additional comments including, but not limited to, on the Revised Draft EIR's analyses of construction emissions, hazards and hazardous materials, construction noise, and alternatives, at a later date. ABJC-39

Please feel free to call me at (415) 492-2131 or e-mail at petra@ppless.com if you have any questions about the comments in this letter. For most cited sources not provided as exhibits, I have included weblinks; if you require a copy of any cited document, I will make it available upon request.

Best regards,

Petra Pless, D.Env.

Typographical Errors

The Revised Draft EIR, page ES-15, refers to the "HUTAs" of Los Angeles and the Bay Area, which presumably refers to HTUAs, High Threat Urban Areas, as defined by the Transportation Safety Administration.[149] Appendix K, List of Abbreviations and Acronyms incorrectly defines HTUA as "High Treat Urban Area."

---

[149] Transportation Security Administration, Standards and Regulations, Rail Transportation Security Rule, 49 CFR 1580; http://www.tsa.gov/stakeholders/standards-and-regulations-1.

Petra Pless, D.Env.

440 Nova Albion Way, #2
San Rafael, CA 94903
(415) 492-2131 phone
(815) 572-8600 fax
petra.pless@gmail.com

Dr. Pless is a court-recognized expert with over 20 years of experience in environmental consulting conducting and managing interdisciplinary environmental research projects and preparing and reviewing environmental permits and other documents for U.S. and European stakeholder groups. Her broad-based experience includes air quality and air pollution control; water quality, water supply, and water pollution control; biological resources; public health and safety; noise studies; California Environmental Quality Act ("CEQA"), Clean Air Act ("CAA"), and National Environmental Policy Act ("NEPA") review; industrial ecology and risk assessment; and use of a wide range of environmental software.

EDUCATION

Doctorate in Environmental Science and Engineering (D.Env.), University of California Los Angeles, 2001

Master of Science (equivalent) in Biology (focus on Limnology), Technical University of Munich, Germany, 1991

PROFESSIONAL HISTORY

Pless Environmental, Inc., Principal, 2008–present

Environmental Consultant, Sole Proprietor, 2006–2008

Leson & Associates (previously Leson Environmental Consulting), Kensington, CA, Environmental Scientist/Project Manager, 1997–2005

University of California Los Angeles, Graduate Research Assistant/Teaching Assistant, 1994–1996

ECON Research and Development, Environmental Scientist, Ingelheim, Germany, 1992–1993

Biocontrol, Environmental Projects Manager, Ingelheim, Germany, 1991–1992

REPRESENTATIVE EXPERIENCE

Air Quality and Pollution Control

Projects include CEQA/NEPA review; CAA attainment and non-attainment new source review; prevention of significant deterioration ("PSD") and Title V permitting; control technology analyses (BACT, LAER, RACT, BARCT, BART, MACT); technology evaluations and cost-effectiveness analyses; criteria and toxic pollutant and greenhouse gas emission inventories; emission offsets; ambient and source monitoring; analysis of emissions estimates and ambient air pollutant concentration modeling. Some typical projects include:

- Provided expert support for intervention in California Energy Commission ("CEC") proceedings for numerous power plants including natural gas-fired, integrated gasification combined-cycle, geothermal (flash and binary) solar (thermal and photovoltaic) facilities with respect to air quality including emission reduction credits, hazards and hazardous materials, public health, noise, and biological resources.
- Critically reviewed and prepared technical comments on the air quality, biology, noise, water quality, and public health and safety sections of CEQA/NEPA documents for numerous commercial, residential, and industrial projects (*e.g.*, power plants, airports, residential developments, retail developments, university expansions, hospitals, refineries, slaughterhouses, asphalt plants, food processing facilities, slaughterhouses, feedlots, printing facilities, mines, quarries, landfills, and recycling facilities) and provided litigation support in a number of cases filed under CEQA.
- Critically reviewed and prepared technical comments on the air quality and public health sections of the Los Angeles Airport Master Plan (Draft, Supplement, and Final Environmental Impact Statement/Environmental Impact Report) for the City of El Segundo. Provided technical comments on the Draft and Final General Conformity Determination for the preferred alternative submitted to the Federal Aviation Administration.
- Prepared comments on proposed PSD and Title V permit best available control technology ("BACT") analysis for greenhouse gas emissions from a proposed direct reduced iron facility in Louisiana.
- Prepared technical comments on U.S. Environmental Protection Agency ("EPA")'s *Inhalation of Fugitive Dust: A Screening Assessment of the Risks Posed by Coal Combustion Waste Landfills* prepared for EPA's proposed coal combustion waste landfill rule.
- Prepared technical comments on the potential air quality impacts of the California Air Resources Board's *Proposed Actions to Further Reduce Particulate Matter at High Priority California Railyards*.
- For several California refineries, evaluated compliance of fired sources with Bay Area Air Quality Management District Rule 9-10. This required evaluation and review of hundreds of source tests to determine if refinery-wide emission caps and compliance monitoring provisions were being met.
- Critically reviewed and prepared technical comments on draft Title V permits for several refineries and other industrial facilities in California.
- Evaluated the public health impacts of locating big-box retail developments in densely populated areas in California and Hawaii. Monitored and evaluated impacts of diesel exhaust emissions and noise on surrounding residential communities.
- In conjunction with the permitting of several residential and commercial developments, conducted studies to determine baseline concentrations of diesel exhaust particulate matter using an aethalometer.
- For an Indiana steel mill, evaluated technology to control NOx and CO emissions from fired sources, including electric arc furnaces and reheat furnaces, to establish BACT. This required a comprehensive review of U.S. and European operating experience. The lowest emission levels were being achieved by steel mills using selective catalytic reduction ("SCR") and selective non-catalytic reduction ("SNCR") in Sweden and The Netherlands.

- For a California petroleum coke calciner, evaluated technology to control NOx, CO, VOCs, and PM10 emissions from the kiln and pyroscrubbers to establish BACT and LAER. This required a review of state and federal clearinghouses, working with regulatory agencies and pollution control vendors, and obtaining and reviewing permits and emissions data from other similar facilities. The best-controlled facilities were located in the South Coast Air Quality Management District.
- For a Kentucky coal-fired power plant, identified the lowest NOx levels that had been permitted and demonstrated in practice to establish BACT. Reviewed operating experience of European, Japanese, and U.S. facilities and evaluated continuous emission monitoring data. The lowest NOx levels had been permitted and achieved in Denmark and in the U.S. in Texas and New York.
- In support of efforts to lower the CO BACT level for power plant emissions, evaluated the contribution of CO emissions to tropospheric ozone formation and co-authored report on same.
- Critically reviewed and prepared technical comments on applications for certification ("AFCs") for numerous natural-gas fired, solar, biomass, and geothermal power plants in California permitted by the California Energy Commission. The comments addressed construction and operational emissions inventories and dispersion modeling, BACT determinations for combustion turbine generators, fluidized bed combustors, diesel emergency generators, etc.
- Critically reviewed and prepared technical comments on draft PSD permits for several natural gas-fired power plants in California, Indiana, and Oregon. The comments addressed emission inventories, greenhouse gas emissions, BACT, case-by-case MACT, compliance monitoring, cost-effectiveness analyses, and enforceability of permit limits.
- For a California refinery, evaluated technology to control NOx and CO emissions from CO Boilers to establish RACT/BARCT to comply with BAAQMD Rule 9-10. This required a review of BACT/RACT/LAER clearinghouses, working with regulatory agencies across the U.S., and reviewing federal and state regulations and State Implementation Plans ("SIPs"). The lowest levels were required in a South Coast Air Quality Management District rule and in the Texas SIP.
- In support of several federal lawsuits filed under the federal Clean Air Act, prepared cost-effectiveness analyses for SCR and oxidation catalysts for simple cycle gas turbines and evaluated opacity data.
- Provided litigation support for a CEQA lawsuit addressing the adequacy of pollution control equipment at a biomass cogeneration plant.
- Prepared comments and provided litigation support on several proposed regulations including the Mojave Desert Air Quality Management District Rule 1406 (fugitive dust emission reduction credits for road paving); South Coast Air Quality Management District Rule 1316, San Joaquin Valley Air Pollution Control District Rule 2201, Antelope Valley Air Quality Management District Regulation XIII, and Mojave Desert Air Quality Management District Regulation XIII (implementation of December 2002 amendments to the federal Clean Air Act).
- Critically reviewed draft permits for several ethanol plants in California, Indiana, Ohio, and Illinois and prepared technical comments.

- Reviewed state-wide average emissions, state-of-the-art control devices, and emissions standards for construction equipment and developed recommendations for mitigation measures for numerous large construction projects.
- Researched sustainable building concepts and alternative energy and determined their feasibility for residential and commercial developments, *e.g.*, regional shopping malls and hospitals.
- Provided comprehensive environmental and regulatory services for an industrial laundry chain. Facilitated permit process with the South Coast Air Quality Management District. Developed test protocol for VOC emissions, conducted field tests, and used mass balance methods to estimate emissions. Reduced disposal costs for solvent-containing waste streams by identifying alternative disposal options. Performed health risk screening for air toxics emissions. Provided permitting support. Renegotiated sewer surcharges with wastewater treatment plant. Identified new customers for shop-towel recycling services.
- Designed computer model to predict performance of biological air pollution control (biofilters) as part of a collaborative technology assessment project, co-funded by several major chemical manufacturers.
- Experience using a wide range of environmental software, including air dispersion models, air emission modeling software, database programs, and geographic information systems.

Water Quality and Pollution Control

Experience in water quality and pollution control, including surface water and ground water quality and supply studies, evaluating water and wastewater treatment technologies, and identifying, evaluating and implementing pollution controls. Some typical projects include:

- Evaluated impacts of on-shore oil drilling activities on large-scale coastal erosion in Nigeria.
- For a 500-MW combined-cycle power plant, prepared a study to evaluate the impact of proposed groundwater pumping on local water quality and supply, including a nearby stream, springs, and a spring-fed waterfall. The study was docketed with the California Energy Commission.
- For a 500-MW combined-cycle power plant, identified and evaluated methods to reduce water use and water quality impacts. These included the use of zero-liquid-discharge systems and alternative cooling technologies, including dry and parallel wet-dry cooling. Prepared cost analyses and evaluated impact of options on water resources. This work led to a settlement in which parallel wet dry cooling and a crystallizer were selected, replacing 100 percent groundwater pumping and wastewater disposal to evaporation ponds.
- For a homeowner's association, reviewed a California Coastal Commission staff report on the replacement of 12,000 linear feet of wooden bulkhead with PVC sheet pile armor. Researched and evaluated impact of proposed project on lagoon water quality, including sediment resuspension, potential leaching of additives and sealants, and long-term stability. Summarized results in technical report.

Applied Ecology, Industrial Ecology and Risk Assessment

Experience in applied ecology, industrial ecology and risk assessment, including human and ecological risk assessments, life cycle assessment, evaluation and licensing of new chemicals, and fate and transport studies of contaminants. Experienced in botanical, phytoplankton, and intertidal species identification and water chemistry analyses. Some typical projects include:

- Conducted technical, ecological, and economic assessments of product lines from agricultural fiber crops for European equipment manufacturer; co-authored proprietary client reports.
- Developed life cycle assessment methodology for industrial products, including agricultural fiber crops and mineral fibers; analyzed technical feasibility and markets for thermal insulation materials from natural plant fibers and conducted comparative life cycle assessments.
- For the California Coastal Conservancy, San Francisco Estuary Institute, Invasive Spartina Project, evaluated the potential use of a new aquatic pesticide for eradication of non-native, invasive cordgrass (*Spartina spp.*) species in the San Francisco Estuary with respect to water quality, biological resources, and human health and safety. Assisted staff in preparing an amendment to the Final EIR.
- Evaluated likelihood that organochlorine pesticide concentrations detected at a U.S. naval air station are residuals from past applications of these pesticides consistent with manufacturers' recommendations. Retained as expert witness in federal court case.
- Prepared human health risk assessments of air pollutant emissions from several industrial and commercial establishments, including power plants, refineries, and commercial laundries.
- Managed and conducted laboratory studies to license pesticides. This work included the evaluation of the adequacy and identification of deficiencies in existing physical/chemical and health effects data sets, initiating and supervising studies to fill data gaps, conducting environmental fate and transport studies, and QA/QC compliance at subcontractor laboratories. Prepared licensing applications and coordinated the registration process with German environmental protection agencies. This work led to regulatory approval of several pesticide applications in less than six months.
- Designed and implemented database on physical/chemical properties, environmental fate, and health impacts of pesticides for a major multi-national pesticide manufacturer.
- Designed and managed experimental toxicological study on potential interference of delta-9-tetrahydrocannabinol in food products with U.S. employee drug testing; co-authored peer-reviewed publication.
- Critically reviewed and prepared technical comments on applications for certification for several natural-gas fired, solar, and geothermal power plants and transmission lines in California permitted by the California Energy Commission. The comments addressed avian collisions and electrocution, construction and operational noise impacts on wildlife, risks from brine ponds, and impacts on endangered species.
- For a 180-MW geothermal power plant, evaluated the impacts of plant construction and operation on the fragile desert ecosystem in the Salton Sea area. This work included baseline noise monitoring and assessing the impact of noise, brine handling and disposal, and air emissions on local biota, public health, and welfare.

- Designed research protocols for a coastal ecological inventory in Southern California; developed sampling methodologies, coordinated field sampling, determined species abundance and distribution in intertidal zone, and conducted statistical data analyses.
- Designed and conducted limnological study on effects of physical/chemical parameters on phytoplankton succession; performed water chemistry analyses and identified phytoplankton species; co-authored two journal articles on results.

PRO BONO ACTIVITIES

Founding member of "SecondAid," a non-profit organization providing tsunami relief for the recovery of small family businesses in Sri Lanka. (www.secondaid.org.)

PUBLICATIONS & RECOMMENDATIONS

Available upon request.

EXHIBIT 1

Pless Environmental, Inc.
440 Nova Albion Way, Suite 2
San Rafael, CA 94903
(415) 492-2131 voice
(815) 572-8600 fax

January 27, 2014

Via Email

Elizabeth Klebaner
Adams Broadwell Joseph & Cardozo
601 Gateway Boulevard, Suite 1000
South San Francisco, CA 94080-7037
eklebaner@adamsbroadwell.com

Re: Review of the Phillips 66 Company Rail Spur Extension Project Public Draft Environmental Impact Report and Vertical Coastal Access Project Assessment

Dear Ms. Klebaner,

Per your request, I have reviewed the Draft Environmental Impact Report ("Draft EIR") for the Phillips 66 Company Rail Spur Extension Project ("Rail Spur Project" or "Project") published by San Luis Obispo County ("County") for review under the California Environmental Quality Act ("CEQA") in November 2013.[1]

My qualifications as an environmental expert include a doctorate in Environmental Science and Engineering from the University of California Los Angeles. I have provided expert comments on air quality in the permitting/licensing proceedings of a number of refineries and associated facilities under the federal and state Clean Air Acts and in the environmental review process under CEQA. My résumé is attached to this letter.

I. Background

Phillips 66 Company ("Phillips 66" or "Applicant") proposes to modify the existing rail spur on the southwest side of the Santa Maria Refinery ("SMR") in unincorporated San Luis Obispo County. According to the Draft EIR, the Rail Spur Project would include an eastward extension of the existing rail spur as well as a railcar

---

[1] San Luis Obispo County, Phillips 66 Company Rail Spur Extension Project Public Draft Environmental Impact Report and Vertical Coastal Access Project Assessment, November 2013, SCH # 2013071028; http://www.slocounty.ca.gov/planning/environmental/EnvironmentalNotices/railproject.htm#.

unloading facility. Trains, both unit and manifest[2], would deliver crude oil to the Santa Maria Refinery for processing. The facility would receive up to five unit trains per week (or a combined total of five unit and manifest trains), with an annual maximum of approximately 250 trains.[3] In a unit train configuration, each train would consist of three locomotives, two buffer cars, and 80 railcars carrying 23,500 gallons ("gal") each or 73 railcars carrying 30,000 gallons each depending on the car size[4], for a total of up to about 13 million barrels per year ("bpy").[5] The unloaded material would be transferred from the new unloading facility to existing crude-oil storage tanks at the SMR via a new on-site above-ground pipeline.[6]

II. The County Improperly Piecemeals the Project

The San Luis Obispo County Air Pollution Control District ("SLOCAPCD" or "District") recently approved the Final Environmental Impact Report for a ten percent increase in crude oil throughput at the Santa Maria Refinery ("SMR Throughput Increase Project"). The Draft EIR discusses the relationship between this recently approved project and the Rail Spur Project as follows:

> The Rail Spur Project would not affect the amount (throughput volume) of material processed at the refinery. Throughput levels at the refinery are capped by the County of San Luis Obispo and by the San Luis Obispo County APCD. The ability of the SMR to operate at the maximum approved throughput level is based on the existing infrastructure and is not dependent on, or related to, the Rail Spur Project. However, if and when local crude oil production (the current major source of oil for the SMR) declines, the Rail Spur Project, if approved, would allow the SMR to maintain operating up to its permitted throughput levels.
>
> The land use application for the SMR Throughput Project was submitted in 2008 and the Final EIR for the Throughput Project was certified by the County Board

---

[2] According to the Draft EIR, p. 1-1, unit trains consist of approximately 80 tank cars and associated locomotives and other supporting cars that stay together as one assembly fully dedicated to delivery of crude oil to the SMR. Manifest trains may have a variety of car types and cargos, other than crude oil, that are not fully dedicated as are unit trains. Manifest trains may deliver one or more cars to the refinery and then continue to other destinations to deliver other cargo.

[3] Draft EIR, p. ES-3.

[4] Draft EIR, p. ES-4.

[5] (250 trains/year) × (80 rail cars/train) × (23,500 gal/rail car) / (42 gal/bbl) = 11,190,476 bpy; (250 trains/year) × (73 rail cars/train) × (30,000 gal/rail car) / (42 gal/bbl) = 13,035,714 bpy.

[6] Draft EIR, p. 2-1.

> of Supervisors in March of 2013, which was approximately two months before the application for the Rail Spur Project was submitted to the County. Therefore, evaluation of these projects separately would not be considered "piece-mealing" under CEQA.[7]

I disagree with the County's conclusion regarding piecemealing and find that the Rail Spur Project is too narrowly defined and is directly related to the SMR Throughput Increase Project.

Information contained in the Draft EIR makes clear that the throughput increase at the Santa Maria Refinery could not be realized but for the crude oil that would be brought in via rail; in fact, it indicates that the refinery would be unable to even continue operating at current throughput levels if the Rail Spur Project were not implemented. According to the Draft EIR, the bulk of the crude oil currently processed at the SMR (60 to 85 percent) is delivered via pipeline from offshore platforms in the Outer Continental Shelf of Santa Barbara.[8] This pipeline system is currently the only way that the SMR can receive crude oil.[9] While crude oil can be trucked to the Santa Maria Pump Station and then placed into the pipeline to the SMR, truck deliveries to the Santa Maria Pump Station are limited to a permitted maximum of 26,000 barrels per day ("bpd")[10], far below the SMR's throughput limit of 48,950 bpd sought by the SMR Throughput Increase Project.[11] Crude oil production in California has been in substantial decline for decades (47.2 percent since 1985[12]), as acknowledged by the Draft EIR.[13] The Draft EIR discloses that crude oil production in Santa Barbara County, both onshore and off-shore, has declined to 30,000 bpd.[14] Given the limitations on truck import to the Santa Maria Pump Station and the long-standing knowledge of

---

[7] Draft EIR, p. ES-18.

[8] Draft EIR, pp. 2-27 and 2-30.

[9] *Ibid*.

[10] *Ibid.*

[11] Final EIR for SMR Throughput Increase EIR, p. 2-24.

[12] California Energy Commission, Transportation Energy Forecasts and Analyses for the 2011 Integrated Energy Policy Report, CEC-600-2011-007-SD, August 2011, p. 14; http://www.energy.ca.gov/2011publications/CEC-600-2011-007/CEC-600-2011-007-SD.pdf.

[13] *See* Draft EIR, p. 2-30 ("… production from offshore Santa Barbara County has been in decline for a number of years…") and p. 6-3 ("California production of crude oil per year has been in decline since 1986… The decline has averaged about 1.7% per year since 1995. More recently, the decline has averaged over 3% annually since the year 2000.)

[14] Draft EIR, p. 2-30.

a declining crude oil supply[15], particularly from the off-shore sources in the Outer Continental Shelf, long before the Applicant submitted an application for the SMR Throughput Increase Project, it is simply not believable that the Applicant would have sought an increase in throughput at the SMR without simultaneously contemplating additional ways to deliver crude oil to the facility. In fact, while the EIR for the SMR Throughput Increase Project claimed not to know "where the additional crude oil would come from that would allow the Refinery to operate at a higher throughput level,[16]" the Draft EIR for the Rail Spur Project explicitly acknowledges the effect of California's declining crude oil production:

> This declining production with the lack of ability of the refinery to source competitively priced crude oil from outside the local area generates the need for the Rail Spur Project.[17]

Clearly, the Rail Spur Project is not only required to maintain current production levels but is essential to further increase the throughput at the SMR to the permit level sought under the SMR Throughput Increase Project. Thus, the SMR Throughput Increase Project and the Rail Spur Project are directly related and should have been analyzed as one project under CEQA. Because the crude switch and increase in production at the SMR were not analyzed as one project, impacts were substantially underestimated and not adequately mitigated.

What's more, the Santa Maria Refinery is linked by a 200-mile pipeline to the Applicant's refinery in Rodeo, Contra Costa County; in fact, the two facilities together are considered to be one refinery, the San Francisco Refinery.[18] The interdependency of these two facilities is laid out in detail in Dr. Fox's comments on the Draft EIR for the Phillips 66 Propane Recovery Project[19] as well as her comments on the Draft EIR for the

---

[15] *See*, for example, California Energy Commission, California Crude Oil Production and Imports, CEC-600-2006-006, April 2006, Figure 2, p. 4; http://www.energy.ca.gov/2006publications/CEC-600-2006-006/CEC-600-2006-006.PDF; and California Energy Commission, Transportation Energy Forecasts and Analyses for the 2009 Integrated Energy Policy Report, CEC-600-2010-002-SF, May 2010, p. 6; http://www.energy.ca.gov/2010publications/CEC-600-2010-002/CEC-600-2010-002-SF.PDF.

[16] Final EIR for SMR Throughput Project, p. 2-26.

[17] Draft EIR, p. 2-30.

[18] *See* Phillips 66, Western United States and Asia Refining; http://www.phillips66.com/EN/about/our-businesses/refining-marketing/refining/Pages/index.aspx. ("The San Francisco Refinery is comprised of two facilities linked by a 200-mile pipeline. The Santa Maria facility is located in Arroyo Grande, Calif., while the Rodeo facility is in the San Francisco Bay Area.")

[19] Phyllis Fox, Comments on Environmental Impact Report for the Phillips 66 Propane Recovery Project, Rodeo, California, prepared for Shute, Mihaly & Weinberger LLP on behalf of Rodeo Citizens Association

Rail Spur Project. I agree with Dr. Fox's analysis that the changes proposed at both facilities in recent years as well as the Rail Spur Project are all inextricably linked and should therefore be analyzed as one project in order to determine the full extent of their environmental impacts. (I note that both CEQA analyses for these projects relied on incorrect baselines – specifically, they relied on maximum permitted throughput as the baseline instead of actual throughput – and otherwise underestimated emissions, in part, because they failed to address emissions associated with the crude switch. Thus, the changes in emissions at the Santa Maria and Rodeo refineries resulting from to the crude switch associated with the Rail Spur Project have not been subjected to any CEQA review.)

III. The Draft EIR Fails to Adequately Characterize and Analyze Impacts Associated with the Crude Oil Slate Imported by the Rail Spur Project

The Draft EIR states that crude oils delivered to the SMR would be sourced from oilfields throughout North America based on market economics and other factors, with the most likely sources being the Bakken oil field in North Dakota, the mid-continent area, and Canada.[20] Beyond this generic statement, the Draft EIR contains no information regarding the crude oils that would be delivered to the SMR via rail and their chemical makeup. This scant information does not qualify as an adequate project description under CEQA.

There are a wide range of traditional crude oils with different compositions currently available in commerce as well as an increasing number of unconventional crude oils, such as crudes produced in Canada from bitumen sands, so-called "oil sands" or "tar sands". Due to their widely varying physico-chemical makeup, the impacts associated with transporting, processing, and storing these various crudes can have substantially different environmental impacts including, but not limited to, air quality, greenhouse gas emissions, worker and public health risks, odors, and risks associated with accidental releases and upsets. Highly variable parameters include, for example, the crude oil's content of sulfur and toxic contaminants and whether it is blended with other chemicals such as diluent (used to make thick crudes such as Canadian tar sands less viscous and easier to transport, resulting in so-called DilBits).

November 15, 2013 http://64.166.146.155/docs/2014/BOS/20140121_330/16707_Exhibit3b-SMWletter-FoxReport.pdf.

[20] Draft EIR, pp. ES-3, 1-4, and 4.12-21.

The Draft EIR's air quality section, for example, is silent on the widely varying impacts that could be caused by the change in crude oils at the facility beyond stating that "SMR operations could change based on the availability of lighter crude oils from more distant fields (such as the Bakken Field), causing less production of coke and sulfur at the refinery. However, refinery operations stemming from delivery of crude by rail most likely would not increase the coke or sulfur production as heavier crude oils than historical Refinery feedstock would most likely not be transported to the new rail facility."[21] This simple statement does not constitute an adequate analysis of the impending change in crude oil processing at the SMR and fails to address any potential associated impacts on air quality beyond the production of coke and sulfur, such as for example, an increase in fugitive emissions when processing a lighter, more volatile crude. The Draft EIR's other environmental impact sections are similarly deficient.

The characteristics and composition of various crude oils and their likely origin for delivery to the SMR is laid out in well-supported detail in Dr. Fox's comments on the Draft EIR for the Rail Spur Project. I agree with Dr. Fox's findings and recommend that the County prepare a revised Draft EIR that analyzes the full range of impacts associated with the proposed switch from regional crude oils to a crude slate that would be sourced from the Bakken oilfields, the mid-continent area or Canada, including the potential for import of DilBits.

IV. The Draft EIR's Analysis of the Project's Operational Impacts on Air Quality Is Flawed and Fails to Require Adequate Mitigation

In addition to the above discussed failure to analyze the impacts of replacing the current crude slate with crudes sourced from the Bakken oil field, Canada, or mid-continent, the Draft EIR's analysis of the Project's operational impacts on air quality is substantially flawed and fails to require adequate mitigation.

A. The Draft EIR Fails to Assess the Significance of Operational Emissions Outside of San Luis Obispo County

The Draft EIR determines the significance of emissions within San Luis Obispo County based on the significance thresholds established by SLOCAPCD but makes no attempt at determining the significance of emissions outside the County's boundaries. This is not acceptable. Most of the Rail Spur Project's operational emissions would occur outside of San Luis Obispo County, as shown in Table 1 below for annual

---

[21] Draft EIR, p. 2-26.

emissions of the sum of reactive organic gases and nitrogen oxides ("ROG+NOx") as well as diesel particulate matter ("DPM").

Table 1: Annual operational emissions of ROG+NOx and DPM*

	ROG + NOx		DPM	
Area where emissions occur	(tons/year)	(percent of total)	(tons/year)	(percent of total)
Within San Luis Obispo County	71.09	6.1%	1.88**	5.7%
Within California outside of San Luis Obispo County	172.01	14.7%	4.89	14.8%
Outside of California (based on distance to Bakken oilfield)	926.20	79.2%	26.34	79.6%
Total	**1,169.30**		**33.11**	

* Emission estimates for ROG+NOx and DPM calculated from Draft EIR, Table 4.3-13.

** The Draft EIR, Table 4.3-13, incorrectly summarizes annual DPM emissions within San Luis Obispo County at 0.89 tons/year.

As shown in Table 1, more than 30 percent of annual ROG+NOx emissions and almost 15 percent of annual DPM emissions occur within California outside of San Luis Obispo County; almost 80 percent of the annual ROG+NOx emissions and DPM emissions occur outside of California. The County may not simply ignore emissions and impacts on air quality and public health that occur beyond its boundaries. The significance of emissions outside of the County can, for example, be assessed by comparing emissions to thresholds of significance established by California air districts through which the trains would travel and to General Conformity *de minimis* thresholds and taking into account the respective airsheds' attainment status. This approach has been used, for example, by the California Energy Commission ("CEC") and the U.S. Department of Energy ("DoE") in their joint analysis of the Hydrogen Energy California Project, near Bakersfield, California, which proposes to import coal from New Mexico.[22]

The County should address the Rail Spur Project's impacts on air quality beyond the San Luis Obispo County line. I recommend that the County prepare a revised Draft EIR that addresses this issue.

---

[22] CEC and DoE, Preliminary Staff Assessment, Draft Environmental Impact Statement, Hydrogen Energy California Project, June 2013, CEC-700-2013-001-PSA, Docket No. 08-AFC-8A, Appendices B and C to Section Air Quality; http://docketpublic.energy.ca.gov/PublicDocuments/Delta/Delta/TN%2071444%2006-28-13%20Preliminary%20Staff%20Assessment%20-%20Draft%20Environmental%20Impact%20Statement.pdf.

B. The Draft EIR Substantially Underestimates Fugitive Emissions from Equipment Leaks

The Draft EIR provides estimates of fugitive emissions from equipment leaks associated with unit train cars, train car offloading lines, offloading collection headers and meters, drain and crude drain, and delivery to the tank farm of 6.22 lbs/day and 1.01 tons/year.[23] These emission estimates are based on the number of individual components (flanges, pressure relief valves, process drains, etc.) and emission factors published by the California Air Pollution Control Officers Association ("CAPCOA") in their *California Implementation Guidelines for Estimating Mass Emissions of Fugitive Hydrocarbon Leaks at Petroleum Facilities*[24] ("CAPCOA Report").[25] Review of the Draft EIR's emission estimates shows that it relies on incorrect emission factors and, consequently, substantially underestimates emissions from fugitive equipment leaks.

The Draft EIR's emission estimates for fugitive equipment leaks are based on emission factors for the oil and gas production industry. The Draft EIR provides no discussion whatsoever of why it deems the oil and gas production industry as applicable to the Project, when, in fact, it will be part of a refinery. The CAPCOA Report provides the following definitions for the oil and gas production and refinery industries:

> **Oil and Gas Production:** A facility at which crude petroleum and natural gas production and handling are conducted, as defined in the Standard Industrial Classification Manual as Industry No. 1311, Crude Petroleum and Natural Gas.
>
> **Refinery:** A facility that processes petroleum, as defined in the Standard Industrial Classification Manual as Industry No. 911, Petroleum Refining.[26]

The Standard Industrial Classification ("SIC") code No. 1311 for Crude Petroleum and Natural Gas reads as follows:

> Establishments primarily engaged in operating oil and gas field properties. Such activities may include exploration for crude petroleum and natural gas; drilling,

---

[23] *See* Draft EIR, Appx. B, p. B-4.

[24] CAPCOA, California Implementation Guidelines for Estimating Mass Emissions of Fugitive Hydrocarbon Leaks at Petroleum Facilities, February 1999; http://www.arb.ca.gov/fugitive/impl_doc.pdf.

[25] *See* Draft EIR, Appx. B, p. B-4, footnote to Table "Fugitive Emissions."

[26] CAPCOA Report, p. 35.

> completing, and equipping wells; operation of separators, emulsion breakers, desilting equipment, and field gathering lines for crude petroleum; and all other activities in the preparation of oil and gas up to the point of shipment from the producing property. This industry includes the production of oil through the mining and extraction of oil from oil shale and oil sands and the production of gas and hydrocarbon liquids through gasification, liquid faction, and pyrolysis of coal at the mine site. Also included are establishments which have complete responsibility for operating oil and gas wells for others on a contract or fee basis. Establishments primarily engaged in performing oil field services for operators on a contract or fee basis are classified in Industry Group 138.[27]

In contrast, SIC code No. 2911 defines Petroleum Refining as follows:

> Establishments primarily engaged in producing gasoline, kerosene, distillate fuel oils, residual fuel oils, and lubricants, through fractionation or straight distillation of crude oil, redistillation of unfinished petroleum derivatives, cracking or other processes. Establishments of this industry also produce aliphatic and aromatic chemicals as by-products. Establishments primarily engaged in producing natural gasoline from natural gas are classified in mining industries. Those manufacturing lubricating oils and greases by blending and compounding purchased materials are included in Industry 2992. Establishments primarily re-refining used lubricating oils are classified in Industry 2992. Establishments primarily engaged in manufacturing cyclic and acyclic organic chemicals are classified in Major Group 28.[28]

Clearly, the Santa Maria Refinery is not an oil and gas production facility "primarily engaged in operating oil and gas field properties" with "activities in the preparation of oil and gas up to the point of shipment from the producing property" but instead a refinery that is "primarily engaged in producing gasoline, kerosene, distillate fuel oils, residual fuel oils, and lubricants, through fractionation or straight distillation of crude oil, redistillation of unfinished petroleum derivatives, cracking or other processes." The Rail Spur Project is part of the Santa Maria Refinery; thus, emission factors for refineries are applicable rather than those for oil and gas production facilities.

Emission factors provided in the CAPCOA Report for refineries are considerably higher than those for the oil and gas production industry. Table 2 compares daily and

---

[27] U.S. Department of Labor, Occupational Safety and Health Administration, SIC Search, 1311 Crude Petroleum and Natural Gas; https://www.osha.gov/pls/imis/sic_manual.display?id=387&tab=description.

[28] U.S. Department of Labor, Occupational Safety and Health Administration, SIC Search, 2911 Petroleum Refining; https://www.osha.gov/pls/imis/sic_manual.display?id=627&tab=description.

annual emissions as calculated by the Draft EIR based on emission factors for oil and gas production industry (CAPCOA Table IV-2c) and revised based on emission factors for refineries (CAPCOA Table IV-2a) for flanges (connectors), pressure relief valves, and pumps (pump seals) based on equipment with a component leak level below 10,000 ppm.

As shown in Table 2 on the next page, emission estimates for fugitive equipment leaks from refineries provided in the CAPCOA Report are dramatically higher than those for the oil and gas production industry. Consequently, revised daily emissions (including fugitive emissions from the carbon canisters) amount to about 150 lbs/day, about 24 times the Draft EIR's estimate of 6.2 lbs/day; revised annual emissions amount to about 27 tons/year, about 27 times the Draft EIR's estimate of 1.01 tons/year.[29] Thus, the Draft EIR substantially underestimates emissions from the Rail Spur Project.

The DEIR's reliance on an incorrect, lower emissions factor is particularly problematic here as the Applicant's intends to import Bakken crude. Bakken crude is very light and volatile and could substantially increase the fugitive leaks from existing equipment throughout the Santa Maria Refinery, which currently processes heavy crudes which are far less volatile. The effect of this crude switch on fugitive emissions from existing refinery components should have been analyzed in the Draft EIR but was not. (The switch in crude will also affect emissions from stationary sources throughout the refinery, which also haven't been analyzed.)

Fugitive emissions from equipment leaks consist mostly of hydrocarbons, many of which are ozone precursors, also called reactive organic gases ("ROG"). Thus, emissions from fugitive equipment leaks associated with the Rail Spur Project would contribute to existing violations of the state and federal ambient air quality standards for ozone and would impede the air basin's progress towards attainment of these standards. (Many of the fugitive compounds emitted from equipment leaks are carcinogenic and/or pose acute and chronic health risks, as discussed in more detail below.) Thus, emissions from fugitive equipment leaks would further increase the already substantial and unavoidable impacts on air quality resulting from operational emissions of the Rail Spur Project as identified by the Draft EIR. Consequently, the Draft EIR fails to inform the public of the severity of impacts associated with the Rail Spur Project.

---

[29] (149.88 lbs/day) / (6.22 lbs/day) = 24.08; (27.22 tons/year) / (1.01 tons/year) = 27.04.

Table 2: Daily and annual emission rates from fugitive equipment leaks as estimated by the Draft EIR using emission factors for oil and gas production (CAPCOA Table IV-2c) and revised based on emission factors for refineries (CAPCOA Table IV-2a)

Process/ System	Source Unit	No. of Proposed Components	Draft EIR			Revised		
			Emission Factor (Oil & Gas) (kg/hr/comp)	Daily Emission Rate (lb/day)	Annual Emission Rate (tons/yr)	Emission Factor (Refinery) (kg/hr/comp)	Daily Emission Rate (lb/day)	Annual Emission Rate (tons/yr)
Unit Train Cars	Flanges (ANSI 16.5-1988)	80	2.40E-05	1.01E-01		6.00E-05	2.53E-01	
	Pressure Relief Valves	20	1.90E-05	2.01E-02		4.47E-02	4.72E+01	
			Total Emissions:	**0.12**	**0.022**		**47.46**	**8.661**
Train Cars Offloading Lines	Pumps -Double Mechanical Seals or Equivalent Seals	20	2.65E-04	2.80E-01		1.20E-02	1.27E+01	
	Flanges (ANSI 16.5-1988)	820	2.40E-05	1.04E+00		6.00E-05	2.60E+00	
	Pressure Relief Valves	20	1.90E-05	2.01E-02		4.47E-02	4.72E+01	
	Process Drains with P-Trap or Seal Pot	20	1.31E-04	1.38E-01		1.31E-04	1.38E-01	
	Other (including fittings, hatches, sight-glasses, and meters)	200	1.31E-04	1.38E+00		1.31E-04	1.38E+00	
			Total Emissions:	**2.86**	**0.52**		**63.99**	**11.68**
Offloading Collection Headers & Meters	Pumps -Double Mechanical Seals or Equivalent Seals	2	2.65E-04	2.80E-02		1.20E-02	1.27E+00	
	Flanges (ANSI 16.5-1988)	380	2.40E-05	4.82E-01		6.00E-05	1.20E+00	
	Pressure Relief Valves	10	1.90E-05	1.00E-02		4.47E-02	2.36E+01	
	Process Drains with P-Trap or Seal Pot	20	1.31E-04	1.38E-01		1.31E-04	1.38E-01	
	Other (including fittings, hatches, sight-glasses, and meters)	30	1.31E-04	2.08E-01		1.31E-04	2.08E-01	
	Total Emissions:			**0.87**	**0.16**		**26.42**	**4.82**
Drain & Crude Drain	Flanges (ANSI 16.5-1988)	83	2.40E-05	1.05E-01		6.00E-05	2.63E-01	
	Pressure Relief Valves	3	1.90E-05	3.01E-03		4.47E-02	7.08E+00	
			Total Emissions:	**0.11**	**0.020**		**7.34**	**1.340**
Delivery to Tank Farm	Flanges (ANSI 16.5-1988)	21	2.40E-05	2.66E-02		6.00E-05	6.65E-02	
	Pressure Relief Valves	1	1.90E-05	1.00E-03		4.47E-02	2.36E+00	
			Total Emissions:	**0.03**	**0.0050**		**2.43**	**0.4429**
Unloading Carbon Canisters		1		2.24	0.28		2.24	0.28
			TOTAL FUGITIVE EMISSIONS	**6.22**	**1.01**		**149.88**	**27.22**

C. The Draft EIR Improperly Defers Analysis of Mitigation Measures and Fails to Identify all Feasible Mitigation Measures to Reduce Significant Impacts on Air Quality

The Draft EIR finds that the Project's operational emissions would substantially exceed the SLOCAPCD's thresholds of significance for ROG and NOx and diesel particulate matter. Specifically, the Project would result in unmitigated emissions of about 870 lbs/day and 71 tons/year of ROG+NOx[30], *i.e.*, about 35 times the District's daily significance threshold of 25 lbs and about three times the annual significance threshold of 25 tons.[31] The above discussed ROG emissions from fugitive equipment leaks further increase Project emissions to more than 40 times the District's daily significance threshold and about four times the District's annual significance threshold.[32] The Project would also result in emissions of about 34 lbs/day of diesel particulate matter[33], *i.e.*, 27 times the District's significance threshold of 1.25 lbs/day.[34]

The Draft EIR finds that reducing idling time would reduce emissions of ROG+NOx by about 25 lbs/day and 3 tons/year,[35] still far above the District's significance thresholds. To further reduce ROG and NOx emissions from the locomotives, the Draft EIR proposes Mitigation Measure AQ-2a:

> Prior to issuance of Notice to Proceed, the Applicant shall investigate methods for reducing the onsite emissions, both from fugitive components and from locomotives. In addition, locomotive emissions shall be mitigated to the extent feasible through the contracting arrangement that increase the use of Tier 1 and better locomotives. If emissions of ROG+NOx with the above mitigations still exceed the thresholds, the Applicant shall secure SLOCAPCD-approved off-site reductions in ROG + NOx emissions to ensure that project-related ROG + NOx emissions within SLO County do not exceed the SLOCAPCD thresholds for the life of the project. Coordination with the SLOCAPCD should begin at least six (6) months prior to issuance of the Notice to Proceed for the Project to allow time

---

[30] Draft EIR, Table 4.3-13, p. 4.3-44.

[31] (869.85 lbs/day) / (25 lbs/day) = 34.79; (71.09 tons/year)/(25 tons/year) = 2.84.

[32] ((149.8 lbs/day) + (869.85 lbs/day) – (6.22 lbs/day))/ (25 lbs/day) = 40.54;
((27.22 tons/year) + (71.09 tons/year) – (1.01 tons/year)/ (25 tons/year) = 3.89.

[33] *Ibid.*

[34] (33.90 lbs/day) / (1.25 lbs/day) = 27.12.

[35] Draft EIR, p. 4.3-45.

> for refining calculations and for the SLOCAPCD to review and approve the off-site mitigation approach.

To further reduce diesel particulate matter emissions from the locomotives, the Draft EIR proposes Mitigation Measure AQ-3:

> Prior to issuance of the Notice to Proceed, the Applicant shall investigate methods for reducing the locomotive emissions through the contracting arrangement that increase the use of Tier 1 and better locomotives. If emissions of diesel particulate with the above mitigations still exceed the thresholds, the Applicant shall secure SLOCAPCD-approved off-site reductions in particulate matter emissions to ensure that project-related diesel particulate emissions within SLO County do not exceed the SLOCAPCD thresholds for the life of the project. Coordination with the SLOCAPCD should begin at least six (6) months prior to issuance of operational permits for the Project to allow time for refining calculations and for the SLOCAPCD to review and approve the off-site mitigation approach.

Both proposed mitigation measures impermissibly defer analysis of their adequacy without providing specific performance standards capable of mitigating the Project's impacts to below significance. Further, the proposed mitigation measures are not stringent enough. The County should investigate the potential for on-site emission reductions before resorting to off-site mitigation, which typically means offsets, *i.e.*, the purchase of credits for emission reductions that occurred somewhere else in the past. On-site mitigation could *e.g.*, include installation of additional, more efficient control technologies on existing units at the Santa Maria Refinery and the Santa Maria Pump Station such as, *e.g.*, vapor recovery units, replacement of leaking components, installation of leakless components, installation of low NOx burners or replacement of older, high-emitting equipment.

In addition, the County must require use of best available control technology ("BACT") for unloading emissions from the rail cars. The Draft EIR proposes to use carbon canisters with a removal efficiency of at least 95 percent.[36] This does not constitute BACT. First of all, carbon adsorption does not uniformly remove the same percentage of all pollutants; some compounds adsorb more readily than others. Therefore, carbon canisters are specified depending on the application and composition of the vapors that need to be controlled. Manufacturers will specify a removal efficiency for specific compounds at a certain concentration in the vapor and a certain air flow. Further, carbon canisters, which are not regenerative, have a high removal efficiency

---

[36] Draft EIR, pp. 4.3-42 and 4.3-51.

until saturation when the effluent concentration will suddenly increase, a behavior known as "breakthrough." Thus carbon canisters must be closely and continually monitored. The Draft EIR does not indicate any such monitoring. More efficient systems than carbon canisters are available for rail terminals including, for example, vapor recovery units ("VRUs") with two sets of carbon beds that can be alternately regenerated and are monitored by continuous emissions monitoring systems ("CEMS"). According to one manufacturer, John Zink: "In typical installations such as truck, rail, tank and marine loading, our VRUs achieve emission control efficiencies of 99% or better.[37] The County should require an analysis of all feasible vapor removal systems and require installation of a BACT-compliant system. This analysis must include an evaluation of the various crude oils that could be imported to the facility under the Rail Spur Project.

To mitigate the impacts caused by diesel particulate matter emissions from locomotives, the County should mandate that all locomotives associated with the Rail Spur Project (*i.e.*, loaded trains hauling crude oil to the terminal and empty trains traveling back to oil fields) meet Tier 3 or 4 emission standards established by the U.S. Environmental Protection Agency ("EPA"). This would achieve a 50 percent or 90 percent reduction in diesel particulate matter emissions, respectively, compared to older Tier 0 and Tier 1 locomotives.

V. The Draft EIR's Health Risk Assessment for Project Operational Emissions Is Substantially Flawed and Fails to Identify Significant Cancer Risks

The Draft EIR recognizes that operational activities associated with the Rail Spur Project would result in emissions of toxic air contaminants ("TACs") from fugitive emissions sources (*e.g.*, valves, pumps, and vapor recovery canisters) and diesel exhaust from locomotive engines.[38] The Draft EIR's health risk assessment estimates excess cancer risks at the Santa Maria Refinery parcel boundary immediately south of the rail spur location of up to 78.1 in one million at the Point of Maximum Impact ("PMI") and the highest excess cancer risk at a residential or sensitive receptor parcel boundary of 9.7 in one million.[39] The Draft EIR concludes that because excess cancer risk at the residential receptor would be below the SLOCAPCD's significance threshold of 10 in

---

[37] *See*, for example, John Zink, Carbon Adsorption Vapor Recovery Systems; http://www.johnzink.com/wp-content/uploads/carbon-adsorption-vapor.pdf.

[38] Draft EIR, p. 4.3-47.

[39] Draft EIR, p. 4.3-48.

one million, the health risk impacts would be less than significant.[40] The Draft EIR's analysis is substantially flawed and fails to identify significant health risks.

First, the SLOCAPCD defined the cancer risk threshold at 10 in one million, not 10.0 in one million.[41] Thus, any cancer risk estimates that are compared to this threshold should be rounded to the nearest whole number; in this case, 9.7 in one million rounded to the nearest whole number is 10 in one million. Thus, cancer risks are significant compared with the SLOACPD's threshold of significance.

Second, as discussed above, the Draft EIR improperly piecemeals the Rail Spur Project, which should be analyzed together with the SMR Throughput Increase Project. The District estimated excess cancer risks associated with the SMR Throughput Increase Project at 2.1 in one million at the fenceline for emissions from stationary sources and 5.9 in one million immediately south of the Santa Maria Refinery along area roadways for diesel exhaust emissions.[42] While these cancer risk estimates are not directly additive to the excess cancer risks from the Rail Spur Project of 9.7 in one million because they do not occur at the same location, based on a comparison of the cancer risk isopleths provided in the Final EIR for the SMR Throughput Increase Project's stationary and mobile sources and in the Draft EIR for locomotives (*see* Figures 1 and 2 below), combined cancer risks would exceed the SLOCAPCD's significance threshold of 10 in one million.

---

[40] *Ibid*.

[41] *See*, SLOCAPCD, CEQA Air Quality Handbook, A Guide for Assessing the Air Quality Impacts for Projects Subject to CEQA Review, April 2012, p. 3-7; ("The APCD has defined the excess cancer risk significance threshold at **10 in a Million**…"; **emphasis** retained.) http://www.slocleanair.org/images/cms/upload/files/CEQA_Handbook_2012_v1.pdf. ("The APCD has defined the excess cancer risk significance threshold at **10 in a Million**…"); **emphasis** retained.)

[42] Final EIR for SMR Throughput Increase, p. 4.1-48.

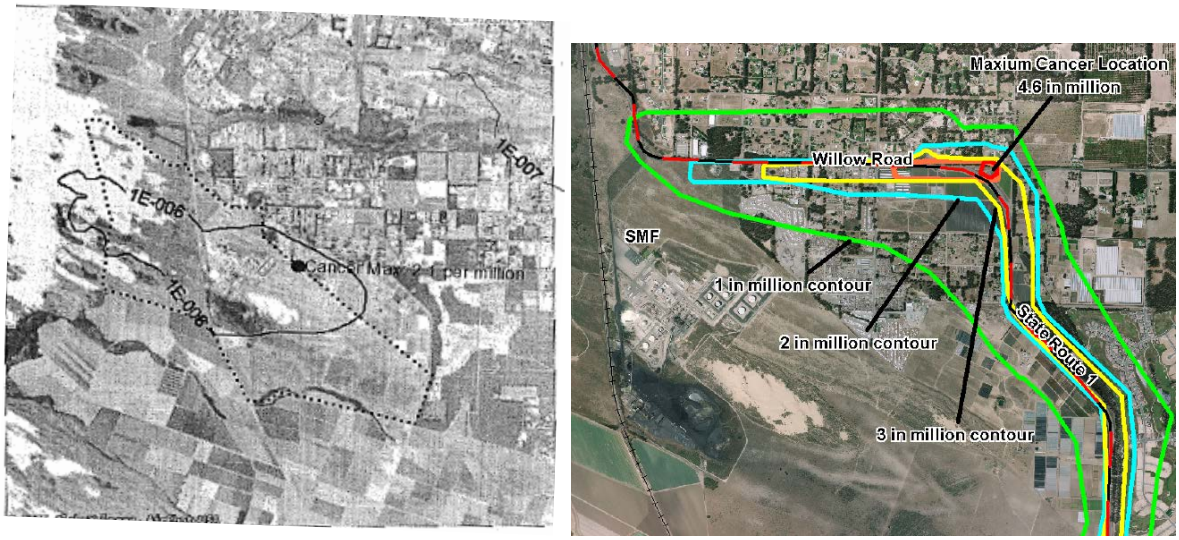

Figure 1: Cancer risk isopleths for TAC emissions from stationary sources (left) and diesel exhaust emissions from mobile sources (right) associated with the SMR Throughput Increase Project
(from: Draft EIR for SMR Throughput Increase Project, Appx. A, p. A-55 (left), and Final EIR for SMR Throughput Increase Project, p. 4.1-26 (right))

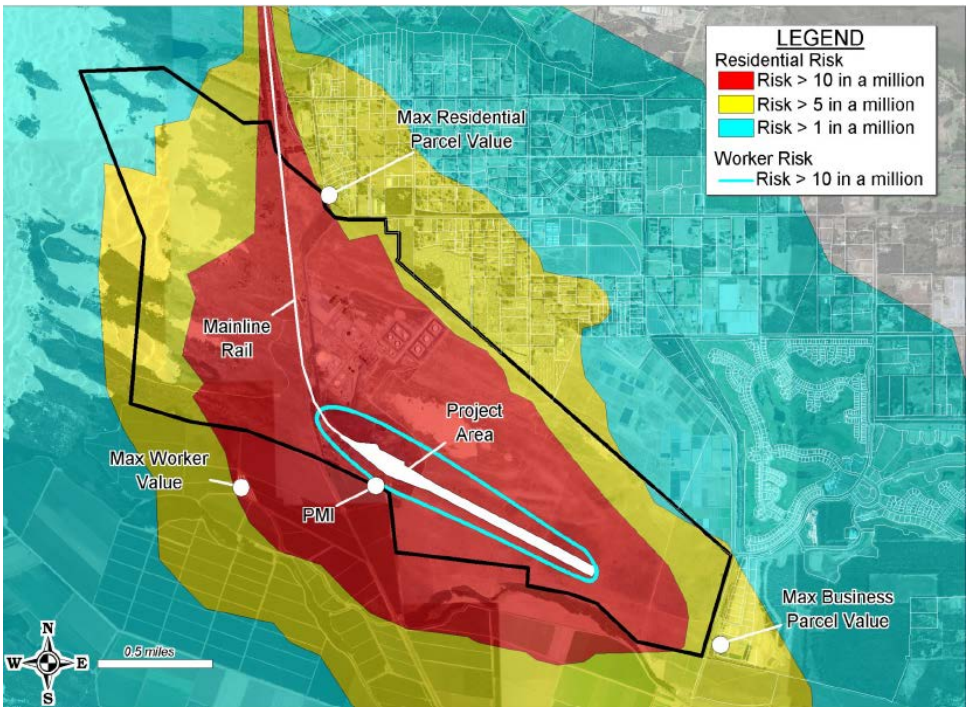

Figure 2: Cancer risk isopleths for diesel exhaust emissions from locomotives associated with the Rail Spur Project
(from: Draft EIR, p. 4.3-39)

Specifically, at the residential receptor, where the Rail Spur Project would result in excess cancer risks of 9.7 in one million, excess cancer risks resulting from mobile sources associated with the SMR Throughput Increase Project (Figure 1 (right)) exceed one in one million. Thus, combined excess cancer risk for an adult residential receptor exceeds the SLOCAPCD's significance threshold of 10 in one million. Excess cancer risks from stationary sources from the SMR Throughput Increase Project (Figure 1 (left)) further contribute to this exceedance of the cancer risk threshold. This is a significant impact that was not identified in the Draft EIR because it improperly piecemeals these project. Further, because the SMR Throughput Increase Project improperly relied upon the permitted crude oil throughput as the baseline, rather than actual crude oil throughput, it substantially underestimated potential cancer risks. Thus, cancer risks are even higher than discussed.

Third, the Health Risk Assessment determined the incremental cancer risk at the nearest residence, the maximally exposed individual ("MEI"), only for an adult receptor[43] without adjustment for increased risk during the first 16 years of life, during which a large fraction of lifetime (70-year) cancer risk is incurred. To address the higher risk of early-in-life exposure, California's Office of Environmental Health Hazard Assessment ("OEHHA") and EPA recommend the use of age-dependent adjustment factors, or age sensitivity factors, to account for the higher risks during early stages of life. Specifically, OEHHA recommends:

> In order to address the issue of early-in life exposures, OEHHA has adopted a policy, based on the available scientific data, of weighting cancer risk from exposures from the third trimester to <2 yrs of age by a factor of ten, and exposures from age two to less than sixteen years by a factor of three. In addition to innate sensitivities to some carcinogens, children have greater exposures due to physiological and behavioral factors. As a result, a greater proportion of total lifetime risk is accrued by age 16 with lifetime exposure to a constant air concentration than was previously recognized.[44]

EPA recommends the same age-dependent adjustment factors.[45] Because children are potentially present at residential locations, age-dependent excess cancer risk must be

---

[43] *See* Draft EIR, Appx. B, p. B-10, "Cancer Risk Calculation."

[44] OEHHA, Air Toxics Hot Spots Program Risk Assessment Guidelines, Technical Support Document for Exposure Assessment and Stochastic Analysis, Final, August 2012 (hereafter OEHHA Technical Support Document"), pp. 11-2 (internal citations omitted); http://oehha.ca.gov/air/hot_spots/pdf/2012tsd/TSDportfolio2012.pdf.

[45] EPA, Cancer Risk Calculations; http://www.epa.gov/oswer/riskassessment/sghandbook/riskcalcs.htm.

evaluated. The results of including age sensitivity factors in a health risk assessment are commonly referred to as "child cancer risk."

I calculated the excess child cancer risk based on the adult cancer risk of 9.71 in one million for a 70-year exposure provided in the Draft EIR[46], as shown in Table 3.

Table 3: Child cancer risk for diesel particulate matter emissions from Rail Spur Project accounting for age sensitivity factors

Risk Year	Period (years)	Age Sensitivity Factor	Excess Child Cancer Risk*
3rd trimester	0.3	10	3.78E-01
1	1	10	1.26E+00
2-15	14	3	5.30E+00
16-70	55	1	6.93E+00
		Σ cancer risk child:	**1.39E+01**
Exceeds 10 in one million significance threshold?			**YES**

* Calculated as: (adult cancer risk 9.71E-06) / (70 years) × (period in years) × (age sensitivity factor)

As shown in Table 3, excess child cancer risk resulting from emissions associated with the Rail Spur Project's locomotive diesel exhaust alone, 13.9 in one million, would clearly exceed the SLOCAPCD's significance threshold of 10 in one million even without adding the emissions from the SMR Throughput Increase Project. This is a significant impact that the Draft EIR fails to identify.

Fourth, Draft EIR states, without any quantitative analysis, that TAC emissions from fugitive sources associated with the Rail Spur Project would be minimal and would not contribute to the overall risk levels.[47] I disagree. As discussed above, the Draft EIR substantially underestimates emissions from fugitive equipment leaks. Given that the estimated cancer risk at the residential receptor of 9.7 in one million from diesel particulate matter emissions alone is close to the significance threshold, even a small contribution from fugitive emissions to the incremental cancer risk would likely result in significant impacts. Crude oil vapors contain various amounts of toxic air contaminants including the contaminants benzene, which is a carcinogen, toluene, ethylbenzene, and xylene, in sum known as "BTEX." DilBits, synthetic crudes and Bakken crude oils contain high amounts of BTEX. The BTEX content in diluent ranges from 27,000 ppm to 60,900 ppm; and the BTEX content in DilBits, blended from these materials, ranges from 8,000 ppm to 12,300 ppm. Similarly, the BTEX in synthetic crude

---

[46] Draft EIR, Appx. B, p. B-10, "Cancer Risk Calculation."

[47] Draft EIR, p. 4.3-47.

oils ranges from 6,100 ppm to 14,100 ppm.[48] These very high concentrations in the crude oils result in very high concentrations in crude vapor that would be emitted from equipment leaks and the carbon canisters and could result in significant public health impacts. The Draft EIR must be revised to assess carcinogenic emissions from fugitive equipment leaks.

Fifth, the Draft EIR does not analyze the potential increase in health impacts resulting from the switch in crude oils, which could be substantial, *e.g.*, due to higher concentrations in carcinogenic compounds such as, *e.g.*, benzene.

Sixth, the Draft EIR fails to provide a cumulative health risk assessment. CEQA requires analysis of the environmental impacts of past, present, and reasonably foreseeable projects. For an assessment of health risks, these past, present, and reasonably foreseeable projects must include emissions from the existing Santa Maria Refinery (including the recently approved SMR Throughput Increase Project if not considered part of the Project) as well as the cumulative projects identified by the Draft EIR[49] such as the Phillips 66 Removal of Soil and Debris Mound Project, the Phillips 66 Pipeline Project, and the Freeport McMoRan Oil & Gas Oil Field Expansion.[50]

VI. The Draft EIR's Odor Analysis Is Deficient

The Draft EIR recognizes that operation of the Rail Spur Project could result in potential odor impacts, including from fugitive emissions of hydrocarbons and hydrogen sulfide ("H_2S") from equipment leaks and the vapor recovery carbon canisters and from diesel exhaust emissions from the locomotives.[51] The Draft EIR's odor analysis and proposed mitigation for these emission sources is deficient, as discussed below.

First, while the Draft EIR recognizes diesel exhaust emissions from the locomotives as potential odor sources, it fails entirely to provide a discussion, let alone a quantitative analysis, of associated odor impacts. The odor of diesel exhaust is considered by most people to be objectionable and EPA found that, at high intensities, diesel exhaust may produce sufficient physiological and psychological effects to

---

[48] For a detailed discussion, *see* Dr. Fox's comments on the Draft EIR.

[49] *See* Draft EIR, Table 3.1, pp. 3-4 through 3-8.

[50] Draft EIR, p. 3-4.

[51] Draft EIR, p. 4.3-51.

warrant concern for public health.[52] Clouds of soot from diesel-powered engines, such as the Project's locomotives when in transit or idling, can travel downwind for miles and drift into heavily populated areas.[53] Here, trains with two to three locomotives would pass directly by numerous densely populated residential neighborhoods en route from the Bakken or Canadian oilfields to the SMR which could cause odor nuisance for receptors located within these neighborhoods. Thus, the County should provide a revised Draft EIR that evaluates the potential for odors from locomotive diesel exhaust.

Second, in addition to H_2S, crude oils contain various amounts of other odiferous sulfur compounds, including mercaptans, which are known for their very strong and unpleasant odors. The odor threshold for most mercaptans is considerably less than 0.5 parts per billion ("ppb"); some mercaptans can be detected at concentrations as low as 0.029 ppb.[54] In fact, mercaptans are added to natural gas in very tiny amounts so that the gas can be smelled to facilitate detecting leaks. Information available for Canadian crudes indicates that diluents can contain more than 100 ppm of volatile mercaptans.[55] The Draft EIR should be revised to analyze potential odor impacts resulting from odiferous sulfur compounds contained in the fugitive emissions from equipment leaks.

Third, the Draft EIR's odor analysis estimates that fugitive crude oil vapor emissions from equipment leaks could produce H_2S levels at the nearby property line of up to 1.7 ppb and less than 1 ppb at residences. (Because the Draft EIR fails to provide the SCREEN3 modeling runs, it fails to support these estimates. Further, the Draft EIR fails to identify the location of the residential receptor.) Based on a H_2S odor limit of 2 ppb with a significant impact being assigned to levels that could exceed the 50 percent odor threshold at 1 ppb, the Draft EIR finds that fugitive emissions could cause odor impacts offsite and odor emissions would be potentially significant. As mitigation for this potential significant odor impact, the Draft EIR requires Mitigation Measure AQ-6:

> The Applicant shall ensure that any new odor sources be added to the existing Refinery Odor Control Plan and submitted to the SLOCAPCD for review and comment before the start of construction. If H_2S levels from fugitive components

---

[52] EPA, Health Assessment Document for Diesel Engine Exhaust, EPA/600/8-90/057F, May 2002; http://www.epa.gov/ttn/atw/dieselfinal.pdf.

[53] Union of Concerned Scientists, Digging Up Trouble, The Health Risk of Construction Pollution in California, November 2006; http://www.ucsusa.org/assets/documents/clean_vehicles/digging-up-trouble.pdf.

[54] Syneco Systems, Inc., Odor Perception, 2009; http://www.synecosystems.com/wp/PDF/151.pdf.

[55] crudemonitor.ca, 2014; http://www.crudemonitor.ca/home.php.

> at the unloading area are determined by the SLOCAPCD to present potential offsite odor issues, measures to implement to reduce odors from the unloading area fugitive components shall include leak detection (if not already implemented), lower leak detection and repair threshold limits (to 100-500 ppm) and/or increased monitoring frequency (monthly) and these measures shall be added to the Odor Control Plan.

This mitigation measure is inadequate for several reasons: a) it negates the Draft EIR's finding of potential significant odor impacts at the property boundary by requiring re-analysis by the SLOCAPCD; and b) it improperly defers analysis of the adequacy of the proposed mitigation measure, which is not permitted under CEQA. The proposed measures including leak detection and lower leak detection and repair thresholds and/or increased monitoring frequency, which are all feasible and routinely required elsewhere, must be required to reduce the significant odor impacts. In addition to the proposed leak detection program, the County should analyze the use of leakless components (*e.g.*, welded connectors, bellows valves, double mechanical seals with high pressure fluids on pumps, enclosed distance pieces on compressors with venting to a control device, etc.) wherever feasible to prevent, rather than detect, odor impacts. Construction of the Rail Spur Project with leakless components is feasible and should be required.

Fourth, the Draft EIR analyzed only equipment leaks from new components associated with the Rail Spur Project; yet, it entirely failed to analyze odor impacts resulting from the change in crude oil slate at the existing SMR including the tank farm. The crude oil brought in by rail could be considerably more odiferous than the crude currently processed. Given that the nearest receptor is located only 425 feet northeast and the closest residence is only 1,200 feet northeast of the crude oil storage tanks[56], it is likely that change in crudes may affect these receptors.

I recommend that the County provide a revised and recirculated Draft EIR that includes modeling of all odorous compounds including diesel exhaust, hydrocarbons, and sulfurous compounds, including mercaptans, to adequately assess potential odor impacts associated with the Rail Spur Project. The revised Draft EIR should evaluate potential odor impacts for the full range of crude oils that could be delivered to the Santa Maria Refinery including heavy Canadian sour crude oil, DilBits, and Bakken crude oil and require adequate mitigation including, for example, the use of leakless components.

---

[56] Draft EIR, p. 4.7-37.

VII. The Draft EIR Fails to Identify Significant Impacts Associated with Emissions of Greenhouse Gases

The Draft EIR presents estimates for greenhouse gas ("GHG") emissions from construction, on- and off-site locomotives, electricity, and other offsite sources resulting from construction and operation of the Rail Spur Project.[57] Specifically, the Draft EIR estimates emissions of 5,533 metric tonnes of carbon dioxide-equivalent ("MT CO_2e") within San Luis Obispo County; 14,179 MT CO_2e within California; and 65,908 MT CO_2e within the United States.[58] The Draft EIR finds that total GHG emissions within San Luis Obispo County would not exceed the SLOCAPCD thresholds of significance and would therefore not result in a significant impact.[59] I disagree with this conclusion for several reasons.

First, greenhouse gases are not local or regional pollutants but contribute cumulatively to global climate change. Therefore, emissions associated with the Rail Spur Project cannot be myopically assessed by counting only emissions that occur within the County boundary. According to the Draft EIR, more than 90 percent of the GHG emissions associated with the Rail Spur Project would occur outside of San Luis Obispo County.[60] These GHG emissions, whose significance is not assessed in any other environmental document, would occur as a consequence of the Rail Spur Project and must therefore be included in the determination of significance. The SLOCAPCD, *i.e.*, the agency who developed the GHG thresholds of significance upon which the Draft EIR relies, recognized in its Final EIR for the SMR Throughput Increase Project that all GHG emissions, including those occurring outside of San Luis Obispo County (*e.g.*, locomotives traveling to Long Beach in Los Angeles County and heavy-duty trucks traveling to and from Kern, Santa Barbara, Monterey, Ventura, and Los Angeles Counties) must be included in the total emissions tally that is compared to the GHG significance threshold.[61] (The Final EIR for the SMR Throughput Increase Project requires mitigation for the project's significant GHG emissions for both on-site stationary sources and off-site mobile sources.[62]) Here, total GHG emissions associated with the Rail Spur Project, 65,908 MT CO_2e, would by far exceed the SLOCAPCD's

---

[57] Draft EIR, Table 4.3-15, p. 4.3-50.

[58] Draft EIR, p. 4.3-50.

[59] *Ibid*.

[60] (1) - (5,533 MT CO_2e)/(65,908 MT CO_2e) = 0.916.

[61] *See*, Final EIR SMR Throughput Project, Tables 4.1-9, 4.1-15, and 4.1-18 and p. 4.1-45.

[62] *See*, Final EIR SMR Throughput Project, Mitigation Measure AQ-3, p. 4.1-46.

stationary source threshold of 10,000 MT CO_2e. This is a significant impact that the Draft EIR fails to identify and mitigate.

Second, as discussed above, the Rail Spur Project is part of a larger refinery-wide project that includes the SMR Throughput Increase Project. Thus, total GHG emissions from these projects must be quantified and compared to applicable significance thresholds. The Final EIR for the SMR Throughput Increase Project estimated a total increase of GHG emissions of 20,470 MT CO_2e over the baseline. (However, it should be noted that this estimate is too low because the Final EIR assumed an incorrect baseline of maximum permitted rather than actual throughput at the facility.) Thus, total emissions from the SMR when implementing both projects would be at least 86,378 MT CO_2e.

The SLOCAPCD's CEQA Guidelines provide a long list of mitigation measures to reduce emission of greenhouse gases from projects including industrial projects. In addition, the CAPCOA has published guidance for quantifying greenhouse mitigation measures.[63] Many of the mitigation measures mentioned in these documents are feasible for the Rail Spur Project and should be required to reduce its significant GHG emissions.[64] I recommend that the County evaluate and require all feasible mitigation to reduce significant impacts with respect to global climate change due to GHG emissions associated with the proposed operational changes at the SMR including the Rail Spur Project and the SMR Throughput Increase Project.

VIII. The Draft EIR Fails Analyze Potentially Significant Health Impacts Due to Valley Fever and Fails to Require Adequate Mitigation

Valley Fever, or coccidioidomycosis (short cocci), is an infectious disease caused by inhaling the spores of *Coccidioides ssp.*[65], a soil-dwelling fungus. Spores, or arthroconidia, are released into the air when infected soils are disturbed, *e.g.*, by

---

[63] CAPCOA, Quantifying Greenhouse Gas Mitigation Measures, A Resource for Local Government to Assess Emission Reductions from Greenhouse Gas Mitigation Measures, August, 2010; http://www.capcoa.org/wp-content/uploads/2010/11/CAPCOA-Quantification-Report-9-14-Final.pdf.

[64] SLOCAPCD, CEQA Air Quality Handbook, A Guide for Assessing the Air Quality Impacts for Projects Subject to CEQA Review, April 2012, Table 3-5 Mitigation Measures, pp. 3-17 through 3-20; http://www.slocleanair.org/images/cms/upload/files/CEQA_Handbook_2012_v1.pdf.

[65] Two species of *Coccidioides* are known to cause Valley Fever: *C. immitis*, which is typically found in California, and *C. posadasii*, which is typically found outside California. *See* Center for Disease Control, Coccidioidomycosis (Valley Fever), Information for Health Professionals; http://www.cdc.gov/fungal/coccidioidomycosis/health-professionals.html.

construction activities, agricultural operations, dust storms, or during earthquakes. The disease is endemic (native and common) in the semiarid regions of the southwestern United States. San Luis Obispo County, including the Project site, is located within the established endemic range of Valley Fever, as shown in Figure 3 below, and the disease has become an increasing concern for health officials in San Luis Obispo County.[66]

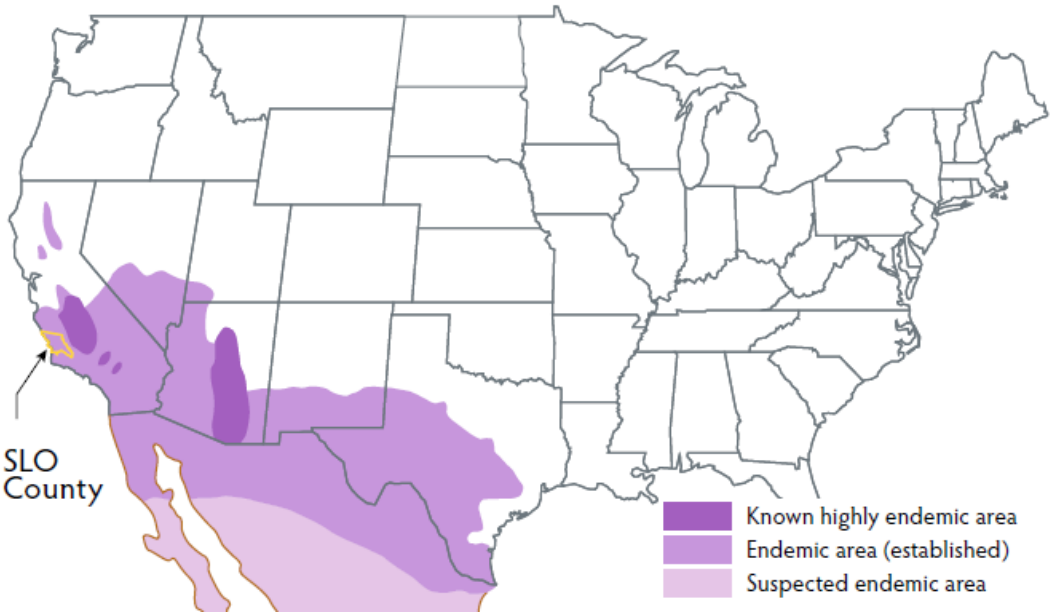

Figure 3: Endemic areas for Valley Fever in the U.S.
(from: San Luis Obispo County Public Health Department, What Is Valley Fever? July 20, 2011; http://www.slocounty.ca.gov/Assets/PH/Epidemiology/ValleyFever_Info.pdf)

Typical symptoms of Valley Fever include fatigue, fever, cough, headache, shortness of breath, rash, muscle aches, and joint pain. Symptoms of advanced Valley Fever include chronic pneumonia, meningitis, skin lesions, and bone or joint infections. The most common clinical presentation of Valley Fever is a self-limited acute or subacute community-acquired pneumonia that becomes evident 13 weeks after

[66] San Luis Obispo County Public Health Department, What Is Valley Fever? July 20, 2011; http://www.slocounty.ca.gov/Assets/PH/Epidemiology/ValleyFever_Info.pdf.

infection.[67] No vaccine or known cure exists for the disease.[68] Between 1990 and 2008, more than 3,000 people have died in the United States from Valley Fever with about half in California.[69] In recent years, reported Valley Fever cases in the Southwest have increased dramatically.[70] Cases of Valley Fever in San Luis Obispo County have more than doubled over the past few years from 87 reported cases in 2009 to 225 cases in 2011. [71] In 2013, San Luis Obispo County experienced two major outbreaks at construction sites for solar facilities.[72]

The Draft EIR makes no mention whatsoever of the potential health risks posed by Valley Fever from construction and/or operation of the Rail Spur Project and does not require any mitigation to limit the public's or workers' potential exposure to cocci. Thus, the Draft EIR utterly fails to inform the public of the significant consequences of Project construction and feedstock production. This failure violates CEQA. As a result, the Draft EIR must be amended to provide this significant new information, requiring recirculation for public review.

At-risk Populations

Dust exposure is one of the primary risk factors for contracting Valley Fever.[73] Specific occupations and outdoor activities associated with dust generation such as

---

[67] *See, e.g.*, Lisa Valdivia, David Nix, Mark Wright, Elizabeth Lindberg, Timothy Fagan, Donald Lieberman, Prien Stoffer, Neil M. Ampel, and John N. Galgiani, Coccidioidomycosis as a Common Cause of Community-acquired Pneumonia, Emerging Infectious Diseases, v. 12, no. 6, June 2006; http://europepmc.org/articles/PMC3373055.

[68] Rebecca Plevin, National Public Radio, Cases Of Mysterious Valley Fever Rise In American Southwest, May 13, 2013; http://www.npr.org/blogs/health/2013/05/13/181880987/cases-of-mysterious-valley-fever-rise-in-american-southwest.

[69] Jennifer Y. Huang, Benjamin Bristow, Shira Shafir, and Frank Sorvillo, Coccidioidomycosis-associated Deaths, United States, 1990–2008; http://www.ncbi.nlm.nih.gov/pmc/articles/PMC3559166/.

[70] *See* Center for Disease Control; Fungal Pneumonia: A Silent Epidemic, Coccidioidomycosis (Valley Fever); http://www.cdc.gov/fungal/pdf/cocci-fact-sheet-sw-us-508c.pdf.

[71] Cal Coast News, Valley Fever Outbreak Strikes Solar Power Plant Workers, May 1, 2013; http://calcoastnews.com/2013/05/valley-fever-outbreak-strikes-solar-power-plant-workers/.

[72] Julie Cart, Los Angeles Times, Officials Study Valley Fever Outbreak at Solar Power Projects, April 30, 2013; http://articles.latimes.com/2013/apr/30/local/la-me-solar-fever-20130501.

[73] Rafael Laniado-Laborin, Expanding Understanding of Epidemiology of Coccidioidomycosis in the Western Hemisphere, Ann. N.Y. Acad. Sci., v. 111, 2007, pp. 20-22; Frederick S. Fisher, Mark W. Bultman, Suzanne M. Johnson, Demosthenes Pappagianis, and Erik Zaborsky, Coccidioides Niches and Habitat Parameters in the Southwestern United States, a Matter of Scale, Ann. N.Y. Acad. Sci., No. 1111, 2007, pp. 47-72 ("All of the examined soil locations are noteworthy as generally 50% of the individuals who were exposed to the dust or were excavating dirt at the sites were infected.");

construction, farming, road work, military training, gardening, hiking, camping, bicycling, or fossil collecting increase the risk of exposure and infection. The risk appears to be more specifically associated with the amount of time spent outdoors than with doing specific activities.[74] The most at-risk populations are construction and agricultural workers,[75] the very populations that would be directly exposed by the Project. A refereed journal article on occupational exposures notes that "[l]abor groups where occupation involves close contact with the soil are at greater risk, especially if the work involves dusty digging operations."[76] One study reported that at study sites, "generally 50% of the individuals who were exposed to the dust or were excavating dirt at the sites were infected."[77]

The disease debilitates the population and thus prevents them from working.[78] The longest period of disability from occupational exposure in California is to construction workers, with 62% of the reported cases resulting in over 60 days of lost work.[79] Another study estimated the average hospital stay for each (non-construction work) case of coccidioidomycosis at 35 days.[80] Further, the potentially exposed population is much larger than construction and agricultural workers because the non-selective raising of dust during Project construction will carry the very small spores –

---

http://www.researchgate.net/publication/6461426_Coccidioides_niches_and_habitat_parameters_in_the_southwestern_United_States_a_matter_of_scale/file/72e7e51c9b9f058a45.pdf?origin=publication_detail.

[74] *See* Center for Disease Control, Coccidioidomycosis (Valley Fever); http://www.cdc.gov/fungal/coccidioidomycosis/, accessed August 21, 2013; and Kern County Public Health Services Department, Valley Fever (Coccidioidomycosis) in Kern County; http://kerncountyvalleyfever.com/.

[75] Lawrence L. Schmelzer and R. Tabershaw, Exposure Factors in Occupational Coccidioidomycosis, Am. J. Public Health Nations Health, v. 58, no. 1, 1968, pp. 107-113, Table 3; http://www.ncbi.nlm.nih.gov/pmc/articles/PMC1228046/?page=1

[76] *Ibid*, p. 110.

[77] Fisher et al., 2007.

[78] Frank E. Swatek, Ecology of *Coccidioides Immitis*, Mycopathologia et Mycologia Applicata, V. 40, Nos. 1-2, pp. 3-12, 1970.

[79] Schmelzer and Tabershaw, 1968, Table 4.

[80] Demosthenes Pappagianis and Hans Einstein, Tempest from Tehachapi Takes Toll or Coccidioides Conveyed Aloft and Afar, West J. Med., v. 129, Dec. 1978, pp. 527-530; http://www.ncbi.nlm.nih.gov/pmc/articles/PMC1238466/pdf/westjmed00256-0079.pdf.

0.002-0.005 millimeters ("mm") (*see* Figure 4) – into non-endemic areas, potentially exposing large non-Project-related populations.[81,82]

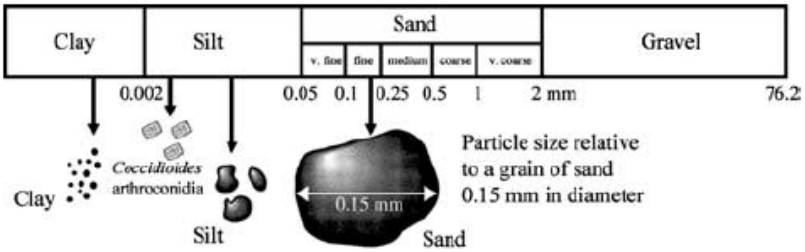

Figure 4: Size of cocci spores compared to soil particles (in mm)
(from: Fisher et al., 2007, Fig. 3)

Valley Fever spores have been documented to travel as much as 500 miles[83] and, thus, dust raised during construction could potentially expose a large number of people hundreds of miles away.

"Hispanics, Asians, and Native Americans are often considered to suffer from Valley Fever with the worst symptoms more often than Caucasians."[84] The most recent California Department of Public Health report indicates that Hispanics accounted for more than a quarter of all reported cases statewide in 2012, the last year for which data was recorded.[85] One study speculated that "[t]he use of transient farm laborers in the San Joaquin Valley and the gradual westward movement in the U.S.A. has produced a steady supply of susceptible individuals."[86] The 2010 Census indicates that 20.8% of the population is Hispanic in San Luis Obispo County; Hispanics are therefore likely to be present in the work force.[87]

---

[81] Schmelzer and Tabershaw, 1968, p. 110; Pappagianis and Einstein, 1978.

[82] Pappagianis and Einstein, 1978, p. 527 ("The northern areas were not directly affected by the ground level windstorm that had struck Kern County but the dust was lifted to several thousand feet elevation and, borne on high currents, the soil and arthrospores along with some moisture were gently deposited on sidewalks and automobiles as "a mud storm" that vexed the residents of much of California." The storm originating in Kern County, for example, had major impacts in the San Francisco Bay Area and Sacramento).

[83] David Filip and Sharon Filip, Valley Fever Epidemic, Golden Phoenix Books, 2008, p. 24.

[84] Filip and Filip, 2008, p. 29.

[85] California Department of Public Health, Coccidioidomycosis Yearly Summary 2012, p. 4; available at http://www.cdph.ca.gov/programs/sss/Documents/COCCI-UPDATED2012YEARLY.pdf.

[86] Swatek, 1970, p. 5.

[87] California Demographics by Cubit, San Luis Obispo County Demographics Summary; available at http://www.california-demographics.com/san-luis-obispo-county-demographics.

Other risk factors include diabetes, malnutrition and socioeconomic status. "Even the risk of 'socioeconomic status' with an annual income below $15,000 was seen to be a risk factor for the most serious Valley Fever conditions. This finding may be due to any number of reasons, from increased likelihood to work in dusty environments where high doses of spores could be inhaled, to a lack of ability to pay for medical care and thus only visiting doctors when symptoms are at their worst."[88] San Luis Obispo County has a poverty rate of 12.9%,[89] again indicating a high proportion of sensitive populations.

The Draft EIR fails to inform the public of the potential significant consequences of Project construction and fails to address the associated environmental justice issues. The County should amend and recirculate the Draft EIR to provide an adequate assessment of Valley Fever and propose adequate mitigation.

A Conventional Dust Control Plan Is Inadequate to Address Potential Health Risks Posed by Exposure to Valley Fever

Conventional dust control measures that would be included in the mitigation measures for the Rail Spur Project pursuant to SLOCAPCD's CEQA Guidelines[90] are not effective at controlling Valley Fever[91] as they largely focus on visible dust. While dust exposure is one of the primary risk factors for contracting Valley Fever and dust-control measures are an important defense against infection, it is important to note that visible dust is only an indicator that *Coccidioides ssp.* spores may be airborne in a given area. Freshly generated dust clouds usually contain a larger proportion of the more visible coarse particles. However, these larger particles settle more rapidly and the remaining fine respirable particles may be difficult to see.

Spores of *Coccidioides ssp.* have slow settling rates in air due to their small size (2 to 5 micrometers), low terminal velocity, and possibly also due to their buoyancy, barrel shape and commonly attached empty hyphae cell fragments.[92] Thus spores,

---

[88] Filip and Filip, 2008, pp. 33, 37.

[89] California Demographics by Cubit, 2013; http://www.california-demographics.com/.

[90] Draft EIR, Mitigation Measure AQ-1f, p. 4.3-38.

[91] *See, e.g.*, Cummings and others, 2010, p. 509; Schneider et al., 1997, p. 908 ("Primary prevention strategies (*e.g.*, dust-control measures) for coccidioidomycosis in endemic areas have limited effectiveness.").

[92] Frederick S. Fisher, Mark W. Bultman, and Demosthenes Pappagianis, Operational Guidelines (version 1.0) for Geological Fieldwork in Areas Endemic for Coccidioidomycosis (Valley Fever),

whose size is well below the limits of human vision, may be present in air that appears relatively clear and dust free. Such ambient, airborne spores with their low settling rates can remain aloft for long periods and be carried hundreds of kilometers from their point of origin. Thus, implementation of dust control measures only when visible dust is present will not provide sufficient protection for both site workers and the general public.

Further, infections by *Coccidioides ssp.* frequently have a seasonal pattern with infection rates that generally spike in the first few weeks of hot dry weather that follow extended milder rainy periods. In California, infection rates are generally higher during the hot summer months especially if weather patterns bring the usual winter rains between November and April.[93] The majority of cases of Valley Fever accordingly occur during the months of June through December. Typically, the risk of catching Valley Fever begins to increase in June and continues an upward trend until it peaks during the months of August, September and October.[94] Drought periods can have an especially potent impact on Valley Fever if they follow periods of rain.[95] It is thought that during drought years the number of organisms competing with *Coccidioides ssp.* decreases and the fungus remains alive but dormant. When rain finally occurs, the arthroconidia germinate and multiply more than usual because of a decreased number of other competing organisms. When the soil dries out in the summer and fall, the spores can become airborne and potentially infectious.[96] The current drought conditions in California, officially declared as a State of Emergency by Governor Brown on January 17, 2013[97], may well increase the occurrence of Valley Fever cases. Thus, major onsite and offsite soil-disturbing construction activities should be timed to occur outside of a prolonged dry period. After soil-disturbing activities conclude, all

---

U.S. Geological Survey Open-File Report 00-348, 2000; http://geopubs.wr.usgs.gov/open-file/of00-348/of00-348.pdf.

[93] *Ibid*.

[94] Kern County Public Health Services Department, What Is Valley Fever, Prevention, Valley Fever Risk Factors; http://kerncountyvalleyfever.com/what-is-valley-fever/risk-factors/.

[95] Gosia Wozniacka, Associated Press, Fever Hits Thousands in Parched West Farm Region, May 5, 2013, citing Prof. John Galgiani, Director of the Valley Fever Center for Excellence at the University of Arizona; http://abcnews.go.com/m/story?id=19113795.

[96] Theodore N. Kirkland and Joshua Fierer, Coccidioidomycosis: A Reemerging Infectious Disease, Emerging Infectious Diseases, Vol. 3, No. 2, July-September 1996; http://www.ncbi.nlm.nih.gov/pmc/articles/PMC2626789/pdf/8903229.pdf.

[97] State of California, Office of Governor Edmund G. Brown, Governor Brown Declares Drought State of Emergency, January 17, 2013; http://gov.ca.gov/home.php.

disturbed soils should be sufficiently stabilized to prevent air-borne dispersal of cocci spores.

Recommended Measures to Reduce Risk of Valley Fever

In response to an outbreak of Valley Fever in construction workers in 2007 at a construction site for a solar facility within its jurisdiction, the County's Public Health Department in conjunction with the California Department of Public Health developed recommendations to limit exposure to Valley Fever based on scientific information from the published literature. The recommended measures go far beyond the conventional dust control measures recommended in the Draft EIR for the Rail Spur Project:

1. *Implement comprehensive Injury and Illness Prevention Program (required by Title 8, Section 3203) ensuring safeguards to prevent Valley Fever are included.*
2. *Work with a medical professional with expertise in cocci to develop a training program for all employees discussing the following issues: potential presence of C. immites in soils; the risks involved with inhaling spores; how to recognize common symptoms (which resemble common viral infections, and may include fatigue, cough, chest pain, fever, rash, headache, and body and joint ache); requesting prompt reporting of suspected symptoms to a supervisor and health care provider; discussing worker entitlement to receive prompt medical care if they suspect symptoms of work-related Valley Fever; and requesting the use of personal protection measures as outlined below.*
3. *Control exposure to dust:*
   - Consult with local Air Pollution Control District Compliance Assistance programs and with California Occupational Safety and Health Administration ("Cal/OSHA") compliance program regarding meeting the requirements of dust control plans and for specific methods of dust control. These methods may include wetting the soil while ensuring that the wetting process does not raise dust or adversely affect the construction process.
   - Provide high-efficiency particulate ("HEP")-filtered, air-conditioned enclosed cabs on heavy equipment. Train workers on proper use of cabs, such as turning on air conditioning prior to using the equipment.
   - Provide communication methods, such as 2-way radios, for use in enclosed cabs.
   - Provide National Institute for Occupational Safety and Health ("NIOSH")-approved respirators for workers without a prior history of Valley Fever.
   - Half-face respirators equipped with N-100 or P-100 filters should be used during digging. Employees should wear respirators when working near earth moving machinery.

- Employees should be medically evaluated, fit-tested, and properly trained on the use of the respirators, and a full respiratory protection program in accordance with the applicable Cal/OSHA Respiratory Protection Standard (8 CCR 5144) should be in place.
- Prohibit eating and smoking at the worksite, and provide separate, clean eating areas with hand-washing facilities.
- Avoid outdoor construction operations during unusually windy conditions.
- Consider limiting outdoor construction during the fall to essential jobs only, as the risk of cocci infection is higher during this season.

4. *Prevent transport of cocci outside endemic areas:*
   - Thoroughly clean equipment, vehicles, and other items before they are moved off-site to other work locations.
   - Provide workers with coveralls daily, lockers (or other system for keeping work and street clothing and shoes separate), daily changing and showering facilities.
   - Clothing should be changed after work every day, preferably at the work site.
   - Train workers to recognize that cocci may be transported offsite on contaminated equipment, clothing, and shoes; alternatively, consider installing boot-washing.
   - Post warnings onsite and consider limiting access to visitors, especially those without adequate training and respiratory protection.

5. *Improve medical surveillance for employees*
   - Employees should have prompt access to medical care, including suspected work-related illnesses and injuries.
   - Work with a medical professional to develop a protocol to medically evaluate employees who have symptoms of Valley Fever.
   - Consider preferentially contracting with 1-2 clinics in the area and communicate with the health care providers in those clinics to ensure that providers are aware that Valley Fever has been reported in the area. This will increase the likelihood that ill workers will receive prompt, proper and consistent medical care.
   - Respirator clearance should include medical evaluation for all new employees, annual re-evaluation for changes in medical status, and annual training, and fit-testing.

- Please note that skin testing is not recommended for evaluation of Valley Fever.
- If an employee is diagnosed with Valley Fever, a physician must determine if the employee should be taken off work, when they may return to work, and what type of work activities they may perform.[98]

Two other studies have developed complementary recommendations to minimize the incidence of Valley Fever. The U.S. Geological Survey ("USGS") has developed recommendations to protect geological field workers in endemic areas.[99] An occupational study of Valley Fever in California workers also developed recommendations to protect those working and living in endemic areas.[100] These two sources identified the following measures, in addition to those identified by the County's Public Health Department, to minimize exposure to Valley Fever:

- Pretest soils to determine if each work location is within an endemic area.
- Implement a vigorous program of medical surveillance.
- Implement aggressive enforcement of respiratory use where exposures from manual digging are involved.
- Test all potential employees for previous infection to identify the immune population and assign immune workers to operations involving known heavy exposures.
- Hire resident labor whenever available, particularly for heavy dust exposure work.
- All workers in endemic areas should use dust masks to protect against inhalation of particles as small as 0.4 microns. Mustaches or beards may prevent a mask from making an airtight seal against the fact and thus should be discouraged.
- Establish a medical program, including skin tests on all new employees, retesting of susceptibles, prompt treatment of respiratory illness in susceptibles; periodic medical examination or interview to discover a history of low grade or subclinical infection, including repeated skin testing of susceptibles.

---

[98] San Luis Obispo County Health Agency, Recommendations for Workers to Prevent Infection by Valley Fever in SLO County; http://www.slocounty.ca.gov/Assets/PH/Epidemiology/Cocci+Recomendations.pdf.

[99] Fisher et al. 2000.

[100] Schmelzer and Tabershaw, 1968, pp. 111 - 113.

All of the above health-protective measures recommended by the County's Public Health Department are feasible for the Rail Spur Project and must be required in an enhanced dust control plan to reduce the risk for construction workers, on-site employees and the public of contracting Valley Fever. Even if all the above measures are adopted, a recirculated Draft EIR is required to analyze whether these measures are adequate to reduce this significant impact to a level below significance.

IX. The Draft EIR Fails to Adequately Analyze Hazards Associated with the Rail Spur Project

The Draft EIR's Hazards and Hazardous Materials section analyzes two sets of impacts: a) on-site release of hazardous materials resulting from crude oil unloading through pipeline transports to the SMR's storage tanks; and b) accidents related to crude oil rail transport. The Draft EIR provides an extensive, 55-page discussion of the applicable regulatory framework and general methodologies to analyze these types of impacts; yet, the Draft EIR's presentation of impacts (a mere 7.5 pages including three full pages of tables and graphs) is impenetrable and inaccessible to a typical reviewer and its conclusions are not adequately supported (in some cases, not supported at all). As such, the Draft EIR does not fulfill its duty as an informational document under CEQA. Further, as explained below, the Draft EIR's analysis of hazards is substantially flawed and fails to identify significant impacts.

My comments below incorporate and/or summarize some of Dr. Fox's comments regarding hazards on the Draft EIR for the Rail Spur Project.

A. The Draft EIR Fails to Analyze Hazards Based on the Various Types of Crude Oils that Could Be Imported Under the Rail Spur Project

The Draft EIR recognizes that the properties of crude oils affect the severity of safety impacts such as oil spills, toxic exposure, and fires.[101] For example, the gravity of crude oils determines whether oils sink or swim when released to water; the crude's vapor pressure determines its volatility and how much vapor will be released into the air; and the crude's composition (various hydrocarbons, hydrogen sulfide, acids, etc.) affect its flammability, toxicity, corrosivity; and so forth. Yet, while the Draft EIR goes to great lengths to describe all other factors that may affect the impacts of various release scenarios (*e.g.*, population density (the number of persons present at each location, the area over which the persons are distributed, and the maximum number of persons that

---

[101] Draft EIR, p. 4.7-2.

could be exposed); ignition probability (identifying any ignition sources between the release location and the receptors); shielding factor (buildings, vegetation terrain, and other types of obstruction that would shield receptors from exposure); two stability scenarios for meteorological conditions; pipe friction effects; failure probabilities for various equipment; earthquake probabilities; etc.[102]), it does not include a description of the physico-chemical characteristics of the various crude oils that could be imported by the Rail Spur Project.

The Draft EIR claims that its analyses of fire risks were based on "a detailed analyses of a typical crude oil that would be delivered via rail" and provides one data point, *i.e.*, a burning rate[103] of 0.288 millimeters per second ("mm/s") for light crude oil. Yet, the Draft EIR does not supply this "detailed analysis" nor does it identify or further characterize this light crude oil. The Draft EIR is silent as to whether crude composition was considered in any of its other analyses of risks.

As discussed in detail in Dr. Fox's comments on the Draft EIR, the Rail Spur Project may result in a variety of crude oils being imported to the Santa Maria Refinery, including light, highly volatile crude oil from the Bakken oilfield in North Dakota and heavy Canadian crudes including DilBits/tar sands. Due to their wide range of physico-chemical properties, the import of these crudes is associated with widely varying risks, some of which have not been addressed by the Draft EIR at all (*e.g.*, corrosion of the SMR's existing refinery components, increases in fugitive ROG emissions).
I recommend that the County revise the Draft EIR to include proper identification of the crude oils that may be imported (including material safety data sheets) and provide revised risk analyses based on this information.

B. The Draft EIR Improperly Limits the Study Area and Scope of the Analysis

The Draft EIR provides a public safety analysis for the study area that "includes the rail corridors in San Luis Obispo County associated with the Rail Spur Project, the existing facilities and pipelines, alternatives, and the areas in the immediate vicinity of the Rail Spur Project that could be affected by an upset at the unloading facilities."[104] In other words, the Draft EIR's analysis excludes the analysis of impacts from transporting

---

[102] *See* Draft EIR, pp. 4.7-5 *et seq*.

[103] The burning rate is a measure of the linear combustion rate of a compound or substance such as a candle or a solid propellant and is measured in length over time. Among the variables affecting the burning- rate are pressure and temperature.

[104] Draft EIR, pp. 4.7-2 and 4.7-3.

crude oil thousands of miles from Northern American oilfields across uncounted sensitive habitats and water resources and through densely populated areas such as Sacramento and the San Francisco Bay Area. This is not acceptable.

The Draft EIR does not include a map showing the route trains would take to the Santa Maria Refinery outside of San Luis Obispo County. However, it discloses that it would contract with Union Pacific Railroad ("UPPR")[105] and provides a map showing rail lines UPPR operates in California.[106] The Draft EIR suggests that unit trains would most likely enter California from the north, follow the rail line along the Sacramento River to Roseville, through Sacramento, Oakland, Santa Clara, San Jose, and along the UPRR coastal line to the Santa Maria Refinery. (Elsewhere, the Draft EIR indicates that trains could also arrive from the south[107], in which case they may pass through the densely populated Los Angeles area. The Draft EIR contains no analysis of this scenario.)

Transportation of crudes along these routes would run parallel to the Sacramento River and through the Sacramento-San Joaquin River Delta and could have disastrous consequences for the water supply for much of California. They also parallel the Pacific Coast, passing through sensitive lands under the jurisdiction of the Coastal Commission. Spills along this segment could result in significant impacts to sensitive coastal resources, including biota and the ocean itself.

The routes would also go through some of the most densely populated areas of California including the Sacramento metropolitan area, the San Francisco Bay Area and Silicon Valley. An accident within these areas could result in large numbers of injuries and fatalities. The Draft EIR is silent on impacts due to accidents outside of San Luis Obispo County and does not provide a discussion of potential alternate routes that stay clear of major population centers, sensitive habitat, nor minimize impacts to water resources.

C. The Draft EIR Fails to Identify Significant Risks with Respect to Injury or Loss of Life

The Draft EIR goes on for dozens of pages describing various accident scenarios, minutia of the risk assessment methodology, input parameters for modeling,

---

[105] For example, Draft EIR, pp. ES-17 and 4.12-7.

[106] Draft EIR, Figure 4.12-2.

[107] Draft EIR, p. 2-21.

significance thresholds, etc.; yet, its discussion of the modeling results consists only of the following two paragraphs:

> Several crude oil spill scenarios were modeled to evaluate worst-case thermal radiation hazards associated with a large crude oil fire. Modeled scenarios ranged from small releases from a tank car, to the complete instantaneous loss of containment of a rail car contents. An explosion of a tank car, simulated as a Boiling Liquid Expanding Vapor Explosion (BLEVE), was also evaluated (see Appendix H for modeling input data and results). Worst-case thermal radiation injury levels would extend approximately 800 meters from the pool fire that could result from a catastrophic pipeline failure on the refinery site. Based on this modeling, it was determined that there would not be any potential for offsite injuries associated with worst-case unloading facility crude oil spill and fire. Therefore, potential hazards associated with the unloading facility are considered less than significant.[108]
>
> As with the refinery spill analysis, several crude oil spill scenarios were modeled to evaluate worst-case thermal radiation hazards associated with a large crude oil fire. Modeled scenarios ranged from small releases from a tank car, to the complete instantaneous loss of containment of a rail car contents. An explosion of a tank car, simulated as a Boiling Liquid Expanding Vapor Explosion (BLEVE), was also evaluated (see Appendix H for modeling input data and results). Worst-case thermal radiation injury levels would extend approximately 500 meters from a pool fire and/or tank car explosion.[109]

This discussion is entirely inadequate, and its conclusion of no significant impacts is erroneous, as discussed below.

First, the Draft EIR provides no discussion of the meaning of "worst-case thermal radiation injury levels" at 800 and 500 meters, respectively; fails to translate the results into units of measure that the general public reading the Draft EIR would be familiar with, *i.e.*, feet, rather than meters; and fails to relate these result to the distance to any potential receptors to support its conclusion of no significant impacts. Further, the Draft EIR makes no attempt whatsoever to translate the modeling results contained in Appendix H into a format that is understandable to the general public. Mere reference to results contained in an appendix that is indecipherable to the general public, unsupported, and, what's more, shows inputs and results in metric units of measure and scientific notation with which most readers will be unfamiliar, does not constitute

---

[108] Draft EIR, p. 4.5-57.

[109] Draft EIR, p. 4.7-58.

an adequate analysis under CEQA. The Draft EIR might as well be written in Greek and is therefore inadequate as an informational document under CEQA.

Second, the Draft EIR's statements and conclusions are incorrect, misleading and incomplete and fail to inform the public about the consequences of the Rail Spur Project:

For example, the Draft EIR states that "[w]orst-case thermal radiation injury levels would extend approximately 800 meters from the pool fire that could result from a catastrophic pipeline failure on the refinery site" and determines, based on this modeling, "that there would not be any potential for offsite injuries associated with worst-case unloading facility crude oil spill and fire."[110] Review of the modeling results in Appendix H for the crude pipeline accident analysis for pool fires[111], the significance criteria established by the Draft EIR, and comparison to the distance to the nearest potential receptors shows that the Draft EIR's conclusion of no potential for offsite injuries is incorrect.

Impacts due to pool fires resulting from a catastrophic release from a pipeline are determined as heat flux, *i.e.*, the thermal radiation intensity that would result in injury. Heat flux is measured in kilowatts per square meters ("kW/m^2"). The Draft EIR's states that "serious injuries would start to be realized at and above 5 kW/m^2… Exposure to thermal radiation levels in excess of 10 kW/m^2 would likely begin to generate fatalities in less than 1 minute. All persons exposed to thermal radiation within the flame area were assumed to suffer fatalities regardless of exposure duration."[112] Table 4 summarizes the distances from a pool fire resulting from a 110,000 cubic meter ("m^3") (692,000 bbl) release of crude oil from a pipeline accident at wind speeds of 1 and 20 meters per second ("m/s") (about 2 and 45 miles per hour ("mph"), respectively) where a heat flux of 5, 10 and 12.5 kw/m^2 would occur. Table 4 shows the distance in both feet and meters (for comparison with the Draft EIR's discussion).

---

[110] Draft EIR, p. 4.7-57.

[111] Draft EIR, Appx. H, pp. H-14 though H-18.

[112] Draft EIR, p. 4.7-19.

Table 4: Crude pipeline accident pool fire modeling results
(from: Draft EIR, Appx. H)

	Heat Flux		
	5 kW/m²	10 kW/m²	12.5 kW/m²
Wind Speed	**Impact Distance (feet)**		
1 m/s	1,647	889	764
20 m/s	2,640	1,555	1,273
	Impact Distance (meters)		
1 m/s	502	271	233
20 m/s	805	474	388

As shown in Table 4, serious injuries (≥5 kW/m²) would occur at distances of about 1,650 feet at wind speeds of 1 m/s and about 2,650 feet at wind speeds of 20 m/s. Fatalities (≥ 10 kW/m²) could occur at distances of about 900 feet at wind speeds of 1 m/s and about 1,600 feet for wind speeds of 20 m/s. Certain death would occur at distances of about 800 feet at wind speeds of 1 m/s and of about 1,300 feet at wind speeds of 20 m/s. The nearest potentially affected receptors are located considerably closer than any of these distances. For example, off-site workers can be present less than 50 feet from the tank farm in the industrial area to the east of the Santa Maria Refinery, the most likely, but not the only or closest, area where a catastrophic release would occur. Thus, workers could be seriously injured or even killed by a catastrophic release from a pipeline accident. The same is true for agricultural workers in the surrounding fields. Residential receptors are also located within modeled impact distances. For example, a residential property at Winterhaven Way to the north is located less than 2,500 feet from the tank farm. Thus, injuries from a pipeline accident cannot be ruled out at this residence. Further, injuries from a catastrophic accident could be experienced by recreational users of the Oceano Dunes State Vehicular Recreation Area and Oso Flakes Lake and Dunes as well as riders on trains passing through the SMR property to the west. In sum, the Draft EIR's finding of no significant impacts is contradicted by evidence in its own modeling reports. Serious injuries or deaths could occur from release of crude oil from pipelines at the Santa Maria Refinery. Thus, the Draft EIR fails to identify significant impacts on off-site receptors including death and serious injury. Further, the Draft EIR is silent on potential injuries and/or deaths for on-site workers, the population most affected by accidents on site.

The Draft EIR's analyses of risks due to releases of crude oil from on-site train accidents are similarly flawed, as laid out in detail in Dr. Fox's comments. I recommend that the County provide a revised Draft EIR for recirculation that addresses these serious impacts to health and safety.

D. The Draft EIR Fails to Address the Potential of Terrorist Attacks on Rail Transports

The Draft EIR states that while the Rail Spur Project could be subject to vandalism that could release hazardous materials, it would not be considered a terrorist target compared to New York City or Washington.[113] Here, the Draft EIR only looks at the terminal but entirely ignores the potential for terrorist attacks on trains in transit transporting crude oil through long stretches of sensitive habitat, along much of California's water supply and through densely populated areas. Freight trains are an easy target, as they are operated by a very small crew and are frequently left unattended. For example, the recent tragic crude oil rail accident in Lake Mégantic in Canada, which resulted in 47 fatalities in a town of 6,000, occurred while the train operator left the train unattended.[114] Given the worldwide awareness raised by the recent slate of catastrophic train derailments and accidents, it may be only a matter of time that trains in transit carrying crude oil will become the target for a terrorist attack or vandalism with disastrous consequences.

E. The Draft EIR Fails to Require Safer Rail Cars to Mitigate Significant Impacts Associated with the Rail Spur Project's Crude Oil Transport

Due to its substantially flawed analyses and erroneous findings of no significant impacts, the Draft EIR does not require any mitigation for risk associated with crude oil accidents. As demonstrated above and in Dr. Fox's comments on the Draft EIR, the Draft EIR's analyses are substantially flawed and fail to identify and require mitigation for risks associated with rail transport and unloading of crude oils to/at the Santa Maria Refinery. Available mitigation includes the exclusive use of railcars specified to Department of Transportation standards exceeding those of the current fleet of rail cars. Because rail cars transporting crude oils are most often owned by the refineries' owners – *e.g.*, Phillips 66 recently acquired 2000 rail cars[115] - the County is not preempted from requiring the most up-to-date and safest rail cars available. For an excellent discussion of the various rail car standards available, *see* Dr. Fox's comments on the Draft EIR.

---

[113] Draft EIR, p. 4.7-6.

[114] *See*, for example, Wikipedia, Lac-Mégantic Derailment; http://en.wikipedia.org/wiki/Lac-M%C3%A9gantic_derailment.

[115] 2013 Barclays CEO Energy-Power Conference, Greg Garland, Chairman and CEO, Phillips 66, September 12, 2013 Transcript, p. 7; http://www.phillips66.com/EN/investor/presentations_ccalls/Documents/Barclays_091213_Final.pdf.

X. Recommendation

Based on the above discussion, I find that the Draft EIR for the Rail Spur Project is substantially deficient as an informational document under CEQA and recommend that the County prepare and recirculate a revised Draft EIR that addresses the issues outlined above.

In addition to the above discussed issues, there are a number of other issues including, but not limited to problems with the Draft EIR's air quality, odor, and risk modeling, that I did not have adequate time to address. I may submit comments on these specific issues later.

Please feel free to call me at (415) 492-2131 or e-mail at petra@ppless.com if you have any questions or if you require a copy of any document cited in this letter.

Best regards,

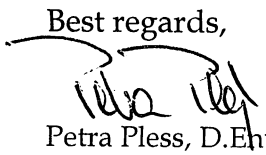

Petra Pless, D.Env.

EXHIBIT 2

January 27, 2014

Via Email
(p66-railspur-comments@co.slo.ca.us)

San Luis Obispo County Department
of Planning and Building
Murry Wilson
976 Osos Street, Room 200
San Luis Obispo, CA 93408

RE: **Comments to the Draft Environmental Impact Report ("DEIR") for the Phillips 66 Company Rail Spur Extension Project ("Project")**

Dear Mr. Wilson,

The Santa Maria facility is the "front end" of the Phillips 66 San Francisco Refinery ("SFR"). The facility performs severe processing of oil streams that are then piped to the SFR's Rodeo facility to make into profitable engine fuels. This rail expansion allows the company to get tar sands "dilbit" oils that its throughput increase allows it to convert into engine fuel feedstocks for the Rodeo facility, where a liquefied petroleum gas expansion requires this change in oil processing, and allows some resultant byproducts, otherwise uneconomic to dispose, to be recovered and sold. These interdependent activities could switch the SFR to refining tar sands oil. Phillips 66 discloses this to investors. Its environmental review does not—thereby hiding serious local pollution, climate pollution and chemical safety hazards from the public and its own workers. Accordingly, on behalf of Communities for a Better Environment, the Sierra Club, the Center for Biological Diversity, the Natural Resources Defense Council, Food and Water Watch, San Francisco Baykeeper, and the California Nurses Association, we respectfully submit this comment seeking an adequate environmental review of the Project.

Communities for a Better Environment ("CBE") is a California nonprofit environmental health and justice organization with offices in Oakland and Huntington Park. CBE has extensive organizational experience in protecting and enhancing the environment and public health by reducing pollution and minimizing hazards from refinery operations.

Sierra Club is a national nonprofit organization of over one million members and supporters dedicated to exploring, enjoying and protecting the wild places of the earth; practicing and promoting responsible use of the earth's ecosystems and resources; educating and enlisting humanity to protect and restore the quality of the natural and human environment; and using all lawful means to carry out these objectives. Sierra Club's Beyond Oil Campaign works to stem our nation's dependence on oil and to secure protections for communities and ecosystems from the significant toxic and global warming pollution emitted by oil development, including prevention of oil spills and other catastrophic events and pollution emissions that result from transporting extreme forms of oil by rail. Sierra Club has more than 143,000 members in the State of California who want to ensure that California's treasured landscape and coastline through which oil would be transported by rail are protected into the future.

The Natural Resources Defense Council ("NRDC") is a national environmental organization with over 1.4 million members and online activists. NRDC's mission is to safeguard the Earth: its people, its plants and animals and the natural systems on which all life depends.

The Center for Biological Diversity ("Center") is a non-profit environmental organization dedicated to the protection of native species and their habitats through science, policy, and environmental law. The Center has over 675,000 members and e-activists throughout California and the western United States, including members that live and/or visit the vicinity of the proposed project. These comments are submitted on behalf of our board, staff and members.

Food & Water Watch works to ensure the food, water and fish we consume is safe, accessible and sustainably produced. So we can all enjoy and trust in what we eat and drink, we help people take charge of where their food comes from, keep clean, affordable, public tap water flowing freely to our homes, protect the environmental quality of oceans, force government to do its job protecting citizens, and educate about the importance of keeping the global commons — our shared resources — under public control.

San Francisco Baykeeper works to reverse the environmental degradation of the past and promote new strategies and policies to protect the water quality of the San Francisco Bay. For two decades, Baykeeper has been the premiere watchdog of the water quality of San Francisco Bay.

California Nurses Association ("CNA"), founded in 1903 is the largest all nurse union in the United States. CNA successfully fought for the first and only statewide law mandating minimum nurse-to-patient ratios in California which saved thousands of lives, among many other laws making hospitals safer for patients. CNA is currently involved in national campaigns to bring economic and political justice and a safe environment in addition to its mainstay of fighting for healthcare justice, and the best nurse contracts in the United States.
/
/
/
/

As set forth below in the attached report of Phyllis Fox, Ph.D., PE ("Fox Santa Maria Report"), and in the attached exhibits, the DEIR suffers from numerous deficiencies that render it inadequate under the California Environmental Quality Act[1] ("CEQA") and the CEQA Guidelines[2] ("CEQA Guidelines"). We respectfully request that the County reject the DEIR as an environmental review document, and defer approval of the Project until such time as the DEIR is revised to comply with CEQA.

An EIR is "the heart of CEQA."[3] "The purpose of an environmental impact report is to provide public agencies and the public in general with detailed information about the effect which a proposed project is likely to have on the environment; to list ways in which the significant effects of such a project might be minimized; and to indicate alternatives to such a project."[4] The EIR "is an environmental 'alarm bell' whose purpose it is to alert the public and its responsible officials to environmental changes before they have reached ecological points of no return. The EIR is also intended 'to demonstrate to an apprehensive citizenry that the agency has, in fact, analyzed and considered the ecological implications of its action.' Because the EIR must be certified or rejected by public officials, it is a document of accountability."[5] The DEIR for the proposed Project not only fails entirely to live up to this mandate, but also tramples principles of Environmental Justice.

The DEIR suffers from several inadequacies predicated on two fundamental defects. First, the DEIR fails to disclose the specific quality of oil feedstock that the Project would enable Phillips 66 to process at its Santa Maria facility in relation to that of its current baseline feedstock. The DEIR obscures that the Project will allow the company to partially refine tar sands crude in Santa Maria. Second, the DEIR illegally piecemeals this Project. The DEIR fails to properly acknowledge the inextricable link between this Project and other projects, in particular masking the identity of the "San Francisco Refinery," which is comprised of this Santa Maria facility and its interdependent partner facility in Rodeo, California. Consequently, the DEIR fails to: CBE-1

(1) provide a stable, accurate and detailed project description, thus undermining every aspect of the impacts analysis;
(2) accurately evaluate numerous Project impacts, including air quality, greenhouse gas emissions, public health and safety, and biological resources;
(3) provide sufficient analysis of cumulative impacts; and
(4) adopt feasible mitigation measures.

Attached Exhibits 1 through 26 support this comment. For these and other reasons detailed herein, the DEIR is inadequate under CEQA. The County must revise the DEIR and recirculate it for public comment.

/

---

[1] Pub. Res. Code § § 21000 *et seq.*
[2] 14 Cal. Code Regs. § § 15000 *et seq.*
[3] *Laurel Heights Improvement Assn. v. Regents of University of California* (1988) 47 Cal. 3d 376, 392 ("*Laurel Heights I*").
[4] Pub. Res. Code § 21061
[5] *Laurel Heights I*, 47 Cal. 3d at 392 (citations omitted).

I. THE EIR'S PROJECT DESCRIPTION IS INADEQUATE.

In order for an environmental document to adequately evaluate the environmental ramifications of a project, it must first provide a comprehensive description of the project itself. "An accurate, stable and finite project description is the sine qua non of an informative and legally sufficient EIR."[6] As a result, courts have found that, even if an EIR is adequate in all other respects, the use of a "truncated project concept" violates CEQA and mandates the conclusion that the lead agency did not proceed in a manner required by law.[7]

Furthermore, "[a]n accurate project description is necessary for an intelligent evaluation of the potential environmental effects of a proposed activity."[8] Thus, an inaccurate or incomplete project description renders the analysis of significant environmental impacts inherently unreliable. While extensive detail is not necessary, the law mandates that EIRs should describe proposed projects with sufficient detail and accuracy to permit informed decision-making.[9] The EIR's Project Description fails to meet this standard in three respects: first, it fails to disclose a change to a different, perhaps even lower, quality crude feedstock; second, it illegally piecemeals this Project from Phillips 66's greater project to import "advantaged crude"; and third, it fails to estimate and analyze impacts from the project's duration.

CBE-2

A. The Project Description Fails to Disclose a Change to a Different Quality Crude Feedstock.

This Project will enable Phillips 66 to import and process tar sands crudes at Santa Maria. Yet, the DEIR fails to disclose this fundamental Project characteristic and consequently fails to analyze any associated and evidently significant impacts. The failure to disclose the type and chemical composition of the new crude oils and their resultant potential impacts is a "threshold issue" and "fundamental defect" in environmental review.[10]

CBE-3

Phillips 66 is currently in the process of implementing a series of projects to allow a switch to refining what its management calls, "advantaged crude." The company emphasizes: "(the) opportunity that we have…is to get…Canadian crudes down into California…We're looking at rail to barge to ship, down to the West Coast refineries..."[11] In May 2013, Phillips 66 EVP Tim Taylor stated in response to a question on bringing heavy Canadian crude oil into California: "Today, we are doing some barge movements down the coast into California on heavy Canadian. You can look in the Northwest to do that. So that's an option that we're going to continue to use and we're looking at expanding that opportunity with some of the logistics things we're putting in place. We're also continuing to move crude by rail in smaller amounts into

---

[6] *San Joaquin Raptor/Wildlife Rescue Center v. County of Stanislaus* (1994) 27 Cal. App. 4th 713, 730, quoting *County of Inyo v. City of Los Angeles* (1977) 71 Cal. App. 3d 185, 193.
[7] *Id.* at 730.
[8] *Id.* (citation omitted).
[9] *See* CEQA Guidelines, §15124 (requirements of an EIR).
[10] *See* eg. Exhibit 25.
[11] September 12, 2013 Transcript, pdf 7: Available at: http://www.phillips66.com/EN/investor/presentations_ccalls/Documents/Barclays_091213_Final.pdf, last accessed January 17, 2014.

California and looking at projects really to increase that as well."[12] These heavy Canadian crudes include tar sands crudes.[13] The map immediately below details this strategy.

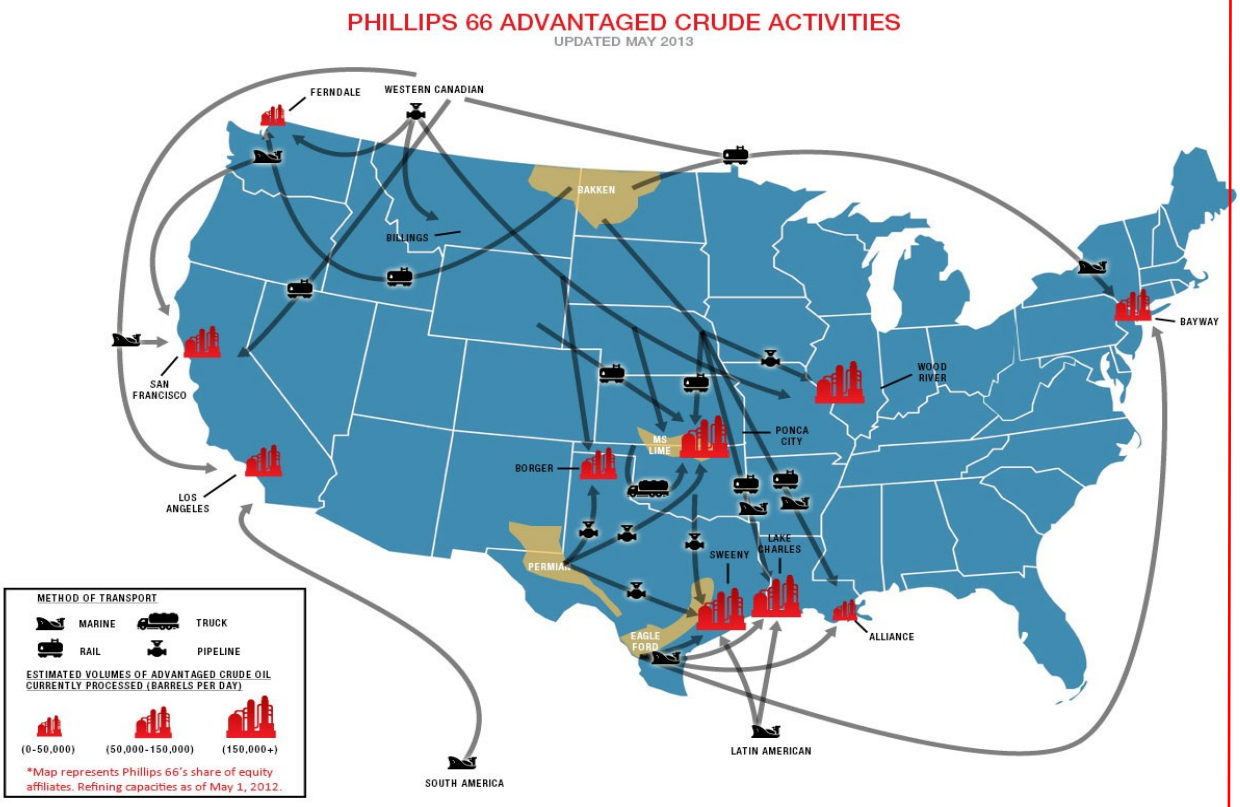

Phillips 66 map indicating plans to transport Western Canadian crude oil to San Francisco Refinery.[14] Notice that the icon labeled "San Francisco" identifies the San Francisco Refinery, which includes the Santa Maria facility.

These tar sands crudes are cost-advantaged because they are more difficult to process, and, especially in the case of Canadian-sourced oils, they are stranded, with no pipeline access, and must be delivered by rail.[15] Phillips 66 is further incentivized to seek out tar sands blends produced by its own affiliates.[16] In addition, the company has no choice but to seek such an alternative supply of crude oil feedstock. As the DEIR indicates, since 1986, California has steadily faced a declining supply of crude oil.[17] This is particularly the case for the Santa Maria facility and the declining supply in Santa Barbara County.[18] This decline in locally available crude stands in stark contrast to the Santa Maria facility's recent Throughput Expansion that

CBE-3

[12] May 31, 2013 Transcript, pdf 13, Available at: http://www.phillips66.com/EN/investor/presentations_ccalls/Documents/PSX-Transcript-2013-05-01.pdf.
[13] *See* Fox Rodeo Report at 9.
[14] Phillips 66 Advantaged Crude Activities: Updated May 2013, last accessed Jan 22, 2014, available at: http://www.phillips66.com/EN/Advantaged%20Crude/index.htm.
[15] Fox Rodeo Report at 9.
[16] *See* Canadian Crude Monitoring Program (www.crudemonitor.ca): Christina Dilbit Blend ("produced at the jointly owned Cenovus Energy Inc. and ConocoPhillips Christina Lake SAGD facility"); and Surmont Heavy Blend (50% owned, and operated by, Conoco Phillips Canada).
[17] DEIR at 6-3; see also Karras Rodeo Report.
[18] *Id.* at 2-27 – 2-30.

enables the Santa Maria facility to process more crude oil. This inconsistency, coupled with the company's publicly stated intention, highlights the company's anticipation to develop a new crude source. Because the Santa Maria facility is currently not equipped to take on the delivery of large amounts of crude by rail, this Project's rail spur is necessary to complete that switch.

Although the DEIR admits that the Project goal is to access a, "full range of competitively priced crude oil,"[19] its analysis attempts to shift the reader's eye to the lighter end of the spectrum of "advantaged crude." Indeed, in spite of the clear indications that Phillips 66 has every intention of bringing down heavy, Western Canadian crudes, including tar sands oils, the DEIR unnecessarily harps on but one type of advantaged crude: Bakken, which is sourced from North Dakota and classified as a "lighter" crude oil feedstock. Although the transport, storage and refining of Bakken poses significant environmental impacts, the source generally contrasts with heavier tar sands crude. Both the DEIR's Introduction and Executive Summary note that the most likely sources of crude would be, "the Bakken field in North Dakota or Canada." The DEIR continues to either cite Bakken solely as an example of crude source, or adds the legally indispensable "and/or Canadian crude" following any reference to North Dakota Bakken.[20] However, the DEIR notes that the Santa Maria facility mainly processes heavy, high-sulfur crude oil.[21] CBE-3

Bakken Crude is an Unlikely Feedstock for the Santa Maria Refinery

In reality, the Santa Maria facility cannot even handle a lighter crude, such as North Dakota Bakken, for the following three reasons. First, the Project notes that the Santa Maria facility uses two Delayed Coking Units to remove the heavier components from the feedstock.[22] Refining of Bakken does not require coking and would idle Santa Maria's cokers; it would however, require a significant modification and capital investment in most of the existing refining equipment that the DEIR does not disclose.[23] Second, the remaining gases produced in the Delayed Coking Units are sent to amine units sized for the removal of hydrogen sulfide (H_2S), prevalent in heavier crudes, including tar sands.[24] There is little or no H_2S in Bakken. These process capabilities are, thus, unnecessary to refine Bakken; yet, necessary to refine tar sands crude.[25] Third, the size of the unit cars described in this Project is not suitable for the transport of Bakken. If the project proponent's true intent was to solely bring in Bakken sourced crudes, there would be no need for cars the size of what is described in the DEIR. The DEIR should have disclosed the proper purpose of these three project components. CBE-4

Moreover, changes in the type and amount of semi-refined products sent to Rodeo would result in changes in emissions at Rodeo.[26] The DEIR does not disclose any changes in emissions at the Santa Maria or Rodeo Refineries from processing the rail-imported crude. This omission

---

[19] DEIR at 2-1.
[20] See eg. DEIR at ES-3, 2-21, 4.12-21, 2-26. The Project's stated goal is to access competitively priced crude oil from, "North America," which would certainly not preclude Canadian tar sands oils.
[21] DEIR at 2-3.
[22] DEIR at 2-28.
[23] *See* Fox Santa Maria Report at 10.
[24] *Id.*
[25] *Id.* at 7-10.
[26] *Id.*

either eliminates Bakken as the major crude import, pointing to a heavy, higher sulfur crude, such as tar sands, or renders the DEIR deficient for failing to analyze the impacts of the crude switch.[27]

The distinction in crude oil feedstock matters. The chemical composition of raw materials that are processed by a refinery directly affect the amount and composition of the refinery's emissions.

> The amount and composition of sulfur in the crude slate, for example, ultimately determines the amount of [sulfur dioxide] that will be emitted from every fired source in the refinery and the amount of odiferous hydrogen sulfide and mercaptans that will be emitted from tanks, pumps, valves, and fittings. The composition of the crude slate establishes the CEQA baseline against which impacts must be measured.[28]

CBE-4

Other significant impacts, such as increased energy consumption, air emissions, toxic pollutant releases, flaring and catastrophic incident risks, are also entirely dependent on the quality of crude oil processed at the facility.[29] As detailed further below, a heavier crude oil feedstock has also been identified as a contributing factor to potentially catastrophic incidents at refineries, and a root cause of the August 6, 2012 fire at the Chevron Richmond Refinery.[30]

Consequently, the DEIR's omission of this switch to a very different crude oil feedstock violates CEQA.[31] It is impossible to provide any intelligent evaluation of the potential environmental effects and risks to community and worker health and safety of partially refining Canadian tar sands crudes in Santa Maria, unless the DEIR *first* discloses this critical component of the Project.[32] At a minimum, the DEIR should have established whether this Project would result in the company's use of a different or lower quality crude oil feedstock, whether in Santa Maria or any foreseeable location, such as Rodeo, and evaluated such consequent impacts.[33] Until then, the DEIR Project Description is inaccurate, incomplete and renders the analysis of significant environmental impacts inherently unreliable.[34]

/
/
/
/

---

[27] *Id.*
[28] Fox Rodeo Report at 13.
[29] *See* Fox Rodeo Report, Fox Valero Report and Karras Rodeo Report at 11-13.
[30] *See* Chemical Safety Board Interim Report on Chevron Fire, dated 19 April 2013.
[31] *See Berkeley Keep Jets Over the Bay Comm. v. Bd. of Port Comm'rs* (2001) 91 Cal.App.4th 1344, 1355 ("the failure to include relevant information precludes informed decisionmaking and informed public participation, thereby thwarting the statutory goals of the EIR process").
[32] *See Id.*, see *also, Communities for a Better Environment v. City of Richmond* (2010) 184 Cal.App.4 70, 89 (holding that an EIR is insufficient where it obscures the project's enabling of a refinery to process heavier crude).
[33] *Id.*
[34] *San Joaquin Raptor/Wildlife Rescue Center v. County of Stanislaus* (1994) 27 Cal.App.4th 713, 722 (the failure to include relevant information relating to a project's components precludes informed decision making, thwarting the goals of the EIR).

B. The Project Is Piecemealed.

CEQA requires that an EIR describe the entirety of a project, including reasonably foreseeable future actions that are part of it.[35] While an EIR need not include speculation about future environmental consequences of a project, the "EIR must include an analysis of the environmental effects of future expansion or other action if: (1) it is a reasonably foreseeable consequence of the initial project; and (2) the future expansion or action will be significant in that it will likely change the scope or nature of the initial project or its environmental effect."[36] Under this standard, "the facts of each case will determine whether and to what extent an EIR must analyze future expansion or other action."[37] A project proponent must analyze future expansion and other such action in an EIR if there is "telling evidence" that the agency has either made decisions or formulated reasonably definite proposals as to such future activities.[38] Further, there must be discussion "in at least general terms" of the future activity, even if the project is contingent on uncertain occurrences.[39]

Phillips 66 San Francisco Refinery

CBE-5

As a threshold issue, the County should note that the Phillips 66's San Francisco Refinery consists of two facilities linked by a 200-mile Phillips-owned pipeline. The Santa Maria facility is located in Arroyo Grande, in San Luis Obispo County, while the Rodeo facility is located in Rodeo, in Contra Costa County. As the DEIR notes, "the Santa Maria Refinery and the Rodeo Refinery, linked by the company's own pipeline, comprise the San Francisco Refinery…Semi-refined liquid products from the Santa Maria Refinery are sent by pipeline to the Rodeo Refinery for upgrading into finished petroleum products."[40] The refining processes at Phillips 66's Santa Maria and Rodeo facilities are integrated to a capacity that neither can achieve alone.[41] Further, Phillips 66 reports these two facilities as a single processing entity, the San Francisco Refinery, to industry and government monitors.[42]

In order for Phillips 66 to implement its "advantaged crude" strategy for the San Francisco Refinery, it requires three pieces: the Santa Maria Refinery Throughput Increase Project, the Rodeo Refinery Propane Fuel Recovery Project, and this Project. Imports of heavy Canadian tar sands are facilitated by the Throughput Increase project. Components of the Rodeo Propane Fuel Recovery Project potentially lock the Rodeo Refinery into a change in oil feedstock processing, most likely tar sands "dilbit" processing.[43] That lower quality feedstock, gas oils and naptha, is produced at Santa Maria and sent to Rodeo by pipeline.[44] However, the

---

[35] CEQA Guidelines § 15378(a).
[36] *Laurel Heights I*, 47 Cal. 3d at 394-396.
[37] *Id.* at 396.
[38] Id. at 396-397.
[39] *Id.* at 398.
[40] DEIR at 2-3.
[41] *See* Karras Rodeo Report (Exhibits 21 through 24). *Oil & Gas Journal*, 2012; and EIA Ref. Cap. 2013. See also orders R2-2011-0027 and R3- 2007-0002. Comparing the references shows "Rodeo" capacities reported to EIA include the Santa Maria facility.
[42] *Id.*
[43] *See* Karras and Fox Rodeo Reports.
[44] *Id.* and DEIR at 2-29.

Santa Maria facility currently lacks the rail spur required to unload any rail-imported crude to initiate this piecemealed strategy and switch to refining tar sands crude. CBE-5

(i) The Prior Throughput Expansion is Dependent on this Project.

The DEIR's assertions that the throughput expansion project is unrelated and not dependent on the Rail Spur Project are misleading and incorrect.[45] This Project wholly supports the throughput expansion. A review of the current baseline for refining at the Santa Maria facility shows that the facility is presently operating far below capacity on declining local crude supplies,[46] calling into question any initial need to increase throughput capacity.

Notably, one of the key purposes of this Project is to build the infrastructure to allow crude oil to be imported from distant sources to replace declining local crude oil sources and facilitate a 10% increase in crude throughput, separately permitted. The company's stated intent, noted above, to switch to "advantaged crudes," explains this apparent contradiction. The Santa Maria throughput increase project increases, "…the volume of products leaving the Santa Maria facility for the Rodeo Refinery via pipeline."[47] Nevertheless, the DEIR still maintains that, "the ability of the Santa Maria Refinery to operate at the maximum approved throughput level is based on the existing infrastructure and is not dependent on, or related to, the Rail Spur Project."[48] Yet, the DEIR then admits that, "the only sources of crude oil to meet refinery crude oil demand are from California production, Alaska production, [or] other North American Production that is delivered by truck or rail."[49] This begs the simple question: if local supply is declining, leaving imports, or advantaged North American crudes by "truck or rail," as the only feasible option, how can the Santa Maria Refinery operate at the maximum capacity, when it currently operates below capacity, independent of rail assisted imports? Trucking in crude is expensive. There is simply no way for the Santa Maria facility to obtain enough crude oil feedstock for its throughput expansion economically without any crude imports by rail, implicating this Project's rail spur extension. The need for this Rail Spur Project was, therefore, wholly foreseeable at the inception of the Throughput Increase Project. CBE-6

Furthermore, the DEIR overlaps with the Throughput Expansion explicitly in two regards. First, the evaluation of transport risks associated with this project cites not only to the same analysis performed in the Throughput Increase Project EIR, but that actual EIR itself.[50] Second, the inclusion of the Vertical Coastal Access component is particularly telling. As a condition of approval of the Throughput Increase Project, Phillips 66 was required to provide a vertical public right of coastal access at the Santa Maria facility.[51] The company provides a detailed discussion of this requirement in this Project's DEIR. The Vertical Coastal Access requirement intersects with this Project. For instance, the DEIR recommends a quantitative risk assessment to determine the minimum distance the coastal access route should be located.[52]

---

[45] *See eg.* DEIR at 2-29.
[46] Fox Santa Maria Report at 3.
[47] S*ee* Fox Rodeo Report at 6, citing Throuput Project DEIR at ES-4, 2-25.
[48] DEIR at ES-18.
[49] DEIR at 6-3.
[50] DEIR at 4.7-38.
[51] *See* DEIR at ES-12.
[52] DEIR at ES-16.

Evidently, the public must also be protected from the rail transport of hazardous materials, as well as the facility partial refining and storage of those same hazardous materials. Not only was the need for the rail spur clearly foreseeable at the time of the throughput expansion, but the linked projects also implicate greater and significant environmental impacts of transporting and handling tar sands crude. The two projects are piecemealed and integral to this greater design. Specifically, this Project will allow an increase in crude processing of up to 10,921 BPD.[53] The DEIR did not, but must, analyze all of the impacts of this increase in crude throughput processing capacity, including the increase in emission of processing an additional 10,921 BPD of crude and the increase in emissions of a change in the crude slate itself. The DEIR analyzes none of the impacts associated with a 10,921 BPD increase in crude throughput or the change in crude slate.

CBE-6

(ii) The Phillips 66 Rodeo Refinery is Dependent on this Project.

These two Santa Maria projects, the Throughput Increase and Rail Spur, are intricately related to the propane/butane recovery project currently proposed at the company's Rodeo Refinery. The Rodeo project recovers propane and butane from the refining of crude oil at both Rodeo and Santa Maria.[54] The throughput increase at Santa Maria would necessarily be included in the streams from which propane and propane/butane would be recovered at the Rodeo Refinery and this increase would have been anticipated when the propane/butane project was being planned as the Land Use Application for the Santa Maria throughput increase project was filed in 2008, well in advance of the propane/butane project at Rodeo.[55] This increase would be converted into semi-refined products in the Santa Maria facility's distillation units and coker to yield gas oil and naptha, which would be sent to the Rodeo Refinery, where propane and butane would be separated, contributing to the propane/butane slated for recovery by the Rodeo Project.[56]

CBE-7

This Project would then allow the import of cost-advantaged tar sands crude streams that are LPG-rich into the company's Santa Maria facility:

> Tar sands crudes are heavier and more viscous than the feedstock currently processed at either Rodeo or Santa Maria. These crudes are thus commonly blended with 25% to 30% diluent to facilitate transporting them by rail or pipeline. The blended crude is known as a "DilBit." The diluent is typically natural gas condensate, pentanes, or naphtha. The diluent can be readily separated and recovered as propane/butane at Rodeo.[57]

Furthermore, analysis of current propane and butane recovery levels at the Rodeo facility highlight the dependence of these projects on one another. The table immediately below[58] summarizes the baseline propane and butane currently recoverable from fuel gas at the Rodeo

---

[53] *See* Fox Santa Maria Report at 3-4.
[54] *See* Karras and Fox Rodeo Reports.
[55] Fox Rodeo Report at 5, 6.
[56] *Id.*
[57] Fox Rodeo Report at 7.
[58] *See* Supplemental Evidence-C to Appeal of Phillips 66 Rodeo Propane Recovery Project EIR, attached as Exhibit 7.

refinery based on all currently available actual data, which were submitted by Phillips 66 to the Bay Area Air Quality Management District as representative of the project baseline:

Baseline LPG in Rodeo Facility Fuel Gas, December 2009–November 2012

	Units	**Average**	**90th Percentile**
U233 fuel gas flow	(MMSCFD)	29.83	35.21
	(million lbs/day)	1.71	2.02
Propane in fuel gas	(lb/lb fuel gas)	0.2381	0.2381
	(million lbs/day)	0.407	0.481
	(barrels/day)	**2,290**	**2,700**
	(% of project design)	**54%**	**64%**
Butane in fuel gas	(lb/lb fuel gas)	0.2230	0.2230
	(million lbs/day)	0.381	0.450
	(barrels/day)	**1,880**	**2,220**
	(% of project design)	**49%**	**58%**

Project design: 4,200 b/d propane and 3,800 b/d butane; data from DEIR at 3-23. Compressed liquid densities at 60 ºF: 178 lb/barrel propane and 203 lb/b butane; data from EPA's AP 42 Appendix A. All other data from Phillips 66 Air Permit Application attachments provided in Exhibit 7. Conversions from MMSCFD (1 atm., 60 ºF) to lbs/d based on fuel gas MW (21.75 lb/lb-mol), and on propane and butane mass fractions (lb/lb fuel gas shown in table), from Attachment 4. Butane shown includes *n*-Butane and Isobutane.

CBE-7

The Rodeo project aims to recover 4,200 b/d of propane and 3,800 b/d of additional butane.[59] The Rodeo refinery's current recovery, even at the 90th percentile (conditions existing only 10% of the time), only meets 64% of the objective propane goal and 58% of the objective butane goal, based on Phillips' data submitted to air officials. The San Francisco Refinery is a closed circuit. In order for Phillips 66 to meet its project goal in Rodeo, it must utilize the benefits of both the Santa Maria Throughput Increase Project and this rail extension Project. Changes in the amount and type of feedstock would be required to achieve the propane and butane recovery goals.[60]

In addition, the Throughput Increase Project anticipates a 10% increase in throughput capacity, and therefore butane and propane feedstocks.[61] Even with the throughput increase, a discrepancy between the amount of propane and butane projected and currently recovered still exists, and is quite large, perhaps explained by the company's anticipated recovery and use of propane and butane-rich diluent in Canadian tar sands crude. Moreover, this implicates direct transport of tar sands crude from the Santa Maria facility to the Rodeo facility by pipeline. This possibility is not precluded by the DEIR's assertion that, "no crude oil or refined product would

[59] Id. and see Phillips Propane Recovery Project DEIR at 3-21 and 3-23.
[60] Fox Rodeo Report at 3.
[61] Fox Rodeo Report at 6, citing Throughput Increase Project EIR.

be transported out of the refinery by rail."[62] Further, some tar sands crudes are classified as a semi-refined product,[63] and therefore not relevant to that assertion.

Another link between the import of tar sands dilbit oils at Santa Maria for processing and the Rodeo project involves solving the problem of the disposition of the diluent used to transport the bitumen in these dilbits. Generally, plants that, like Santa Maria's, are not configured to process light crude in any quantity may need to consider disposing of the (very light) diluent, which may, for example, simply be returned for reuse as diluent in future dilbit imports.[64] While such a solution may be economic for pipeline delivery systems it could be quite costly if the diluent is returned by rail. However, this same diluent is LPG-rich. The Rodeo project, by allowing Phillips to recover and sell that (LPG) portion of the diluent, could significantly improve the cost structure of the "Advantaged Crude" strategy to be implemented by the Project.

Evidently, plenty of "telling evidence" exists regarding the intimate connection between the proposed Project, the Throughput Increase Project and the Propane Recovery Project. The Rodeo Project depends on the projects at the Santa Maria Facility and vice versa. Consequently, these are connected actions that must therefore be analyzed concurrently with the direct impacts of the proposed Project itself.[65] CBE-7

Finally, under CEQA, even assuming, arguendo, that the Rodeo Propane Recovery project is not an integral part of this proposed Project, the DEIR still failed to adequately discuss the Rodeo project, and should at a minimum have discussed the need to recover propane or butane from sources facilitated by the rail spur expansion.[66] The DEIR's admission that Santa Maria supplies partially refined oil to Rodeo by procesing declining local crude supplies established the dependence of the Rodeo facility on the replacement feedstock to be imported by the Project. In its current state, the DEIR's incomplete, unstable and vague project description undermines the validity of the document's environmental impact analyses. The document should be revised to correct these many deficiencies.

C. The DEIR Fails to State a Project Duration.

The expected operational duration of a project is vital to any meaningful assessment of the potential environmental consequences of the project, by both decisionmakers and the public. It is impossible to identify, much less mitigate potential, and foreseeable impacts without information relating to the approximate or known duration of a proposed project's operational components. It is critical for an accurate, stable and finite project description.[67] The DEIR fails to meet this standard. CBE-8

Although both the initial study and the DEIR include discussions of the Project's anticipated impacts in the context of construction, demolition and general, continued operations,

---

[62] DEIR at ES-5.
[63] Fox Rodeo Report at 6.
[64] *See eg.* Exhibit 18 at 7.
[65] CEQA Guidelines, § 15378, subd. (a) agency must evaluate the environmental impacts of the whole of the action.
[66] *Laurel Heights I*, 47 Cal.3d at 398 (requiring discussion "in at least general terms" of future activity in connection with a project, even if the project is contingent on uncertain occurrences).
[67] *See County of Inyo v. City of Los Angeles* (1977) 71 Cal.App.3d 185, 193.

both documents omit identification of a precise duration of those Project phases, beyond the construction phase, which is identified as lasting between 9-10 months. This Project implicates a potentially significant period of operation of the proposed rail car tracks, the resultant transport of a different quality and volatile crude feedstock up and down the West Coast, the proposed rail spur's increase in cargo load capacity at the Santa Maria facility, and the use of the new 24-inch above ground pipeline, as well as the 200 mile pipeline stretch to the Rodeo plant. A legally sufficient project description must identify the anticipated duration of these activities.

For example, it matters whether the Project locks the Refinery into receiving somewhere between 80-73 23,500-30,000 gallon railcars, 5 times a day, for a 5 year, 10 year, or 75 year period. Moreover, as explained above, and detailed further throughout these comments, many of this DEIR's shortcomings stem from its failure to analyze the applicant's clear intent and plan to shift the Refinery's overall crude slate. The physical and chemical components and overall composition of the crude that will be unloaded at the Santa Maria facility directly informs the necessary impact, mitigation and alternatives analyses undertaken in this DEIR. As written, however, the DEIR simply states that the crude oil market is too "speculative" to determine whether and how displaced oil sources will be replaced, when necessary *over time*.[68] The Project foresees changing components over time; an analysis of project duration is essential. Such integral points of analysis as the direct, immediate, and foreseeable impacts of the Project are thus obscured entirely, unnecessarily, and in violation of CEQA.[69]

CBE-8

II. THE DEIR'S ANALYSIS OF AND MITIGATION FOR THE IMPACTS OF THE PROPOSED PROJECT ARE INADEQUATE.

A. The DEIR Fails to adequately Analyze and Mitigate the Project's Public Health Impacts.

In order to effectuate the fundamental purpose of CEQA, it is critical that an EIR meaningfully inform the public and its responsible officials of the environmental consequences of their decisions *before* they are made."[70] Only with a genuine, good faith disclosure of a proposed project's components, can a lead Agency's analyze the full range of potential impacts of the project, identify, and implement mitigation measures where necessary, prior to project approval.[71]

CBE-9

This Project has the potential to degrade the environment and to cause serious public health impacts. This includes an increased risk of dangers to workers. Indeed, because of the DEIR's failure to include integral project components and the refinery's overall the crude slate change in its analyses, the DEIR often asks the wrong questions, causing the Project's environmental impacts to appear benign, non-existent, or even beneficial. In other instances, the

---

[68] DEIR at 2-30 (emphasis added).
[69] See, *County of Inyo v. City of Los Angeles*, *supra*, 71 Cal. App. 3d 185.
[70] *Laurel Heights Improvement Ass'n v. Regents of University of California* (1993) 6 Cal. 4th 1112, 1123; CEQA Guidelines § 15126.2(a) ("[a]n EIR *shall* identify and focus on the significant environmental effects of the proposed project") (emphasis added throughout).
[71] Pub. Res. Code § 21002 (public agencies should not approve projects as proposed if there are feasible alternatives or feasible mitigation measures available which would substantially lessen the significant environmental effects of such projects); Guidelines § 15126.4.

document lacks the necessary detail to verify the validity of its analyses. Consequently, the DEIR fails to include a sufficient analysis of the Project's impacts on worker and public health and safety, as required by CEQA.[72] The following six issues highlight these inadequacies. CBE-9

(i) The DEIR either Underestimates or Fails to Address the Project's Toxic Air Contaminant and Hazardous Air Pollutant Emissions.

The DEIR provides no information about existing exposure to Toxic Air Contaminants (TACs) including those identified in the Notice of Preparation (NOP) and Initial Study, and further identified as impacts of particular concern to the SLOAPCD, in comments submitted by the agency. This omission violates CEQA's core requirement that an EIR include an adequate "description of the physical environmental conditions in the vicinity of the project."[73] As the Guidelines instruct, "[k]nowledge of the regional setting is critical to the assessment of environmental impacts."[74] Unless the DEIR adequately describes the public's existing exposure to TACs, decision-makers cannot: (1) understand the scope of the existing TAC problem; (2) measure the Project's new TAC impacts against a baseline of current TAC emissions; (3) evaluate mitigation of those impacts; or (4) intelligently decide whether the Project's approval is worth the exposure increases caused by the project.

Moreover, the DEIR fails to identify, analyze or mitigate known impacts, which will result from the added presence of additional TACS and Hazardous Air Pollutants (HAPs) typically found in the crude blend that will be delivered, processed and transported as a result of this Project. Some of these TACs and HAPs, that are of particular concern to both the United States Environmental Protection Agency (EPA) and the California Air Resources Board (CARB), yet are either omitted or inadequately analyzed in the EIR, include the following: benzene, sulfur compounds, toluene, xylenes, inorganic lead and other metals including Nickel, diesel particulates. CBE-10

(ii) The DEIR Fails to Adequately Mitigate Potential Toxic Asbestos Impacts From Both the Construction and Operations Phases of the Project.

The Initial Study identifies naturally occurring asbestos and asbestos containing material as two sources of potential toxic contaminants, resulting in a significant impact on the environment.[75] Both potential sources are identified as toxic contaminants of particular concern to the SLOPACD; triggering notification and survey requirements to ensure that known, severe human health impacts do not flow from construction, demolition and ongoing operations related to the rail spur project.[76] Such concern was also based on the fact that such activities would CBE-11

[72] *See*, *Laurel Heights Improvement Assn. v. Regents of Univ. of California, supra,* 47 Cal.3d, at 400 (*quoting* Pub. Resources Code § 21002.1(a); and Guidelines 15002(a)). *See also*, *Communities for a Better Environment v. Richmond, supra*, 184 Cal.App.4th, at 89 (an "EIR must include forseeable change in crude processed as part of environmental and impacts analysis.").
[73] CEQA Guidelines § 15125(a).
[74] *Id*. § 15125(c).
[75] NOP and Initial Study, 8
[76] NOP and Initial Study, Appendix C, Comments – Agency Referral Responses, SLOACPD Response to Initial Study and Mitigated Negative Declaration, at pp. 4-5.

occur in "close proximity to multiple sensitive receptors."[77]

The DEIR addresses potential impacts from asbestos releases into the air and surrounding environment in the mitigation table, at IST-13, by simply "covering" during construction. However, the DEIR makes no mention of mitigation measures applicable to demolition, or ongoing operations and their resulting disturbance to the surrounding area containing asbestos. As of updates made in 2011, however, CARB has identified asbestos, including naturally occurring asbestos as a toxic contaminant for which there is no safe level of exposure; thus, merely "covering" construction projects, without addressing ongoing disturbances, particularly in light of the close proximity of multiple sensitive receptors, is an inadequate mitigation measure. CBE-11

(iii) The DEIR Fails to either Adequately Identify or Mitigate Diesel Particulate Matter Emissions During both Construction and Operations Phases of the Project.

The DEIR admits that both the operational activities and the construction phase of the project will result in emission levels above SLOAPCD thresholds for diesel particulate matter (DPM) a state recognized TAC.[78] The DEIR classifies such impacts as falling in both the Class I and Class II impact categories. The first, Class I, are impacts that are both significant and unavoidable; and second, Class II, are impacts that are potentially significant, but less than significant with mitigation. While these classifications appear to recognize the severity of the potential impacts that may be caused by DPM, the analysis contained in the DEIR falls short of fully identifying the extent of impacts that will be caused by an increase in DPM emissions. Furthermore, the DEIR's analysis is misguided by the fact that it fails to state an accurate baseline level of the Santa Maria facility's current, and foreseeable process emissions. Finally, the DEIR fails to account for the increase in emissions that will come from the Refinery's undisclosed change in crude slate, and fully fails to identify the Project's increase in emissions at the Rodeo facility, as a result of the DEIR's piecemealed analysis. CBE-12

An Improper Baseline

In section 4.3.1.4, the DEIR generally states that "toxic emissions" including DPM, are associated with the Refinery's current daily operations.[79] While it does not state a precise level for those emissions, the DEIR goes on to provide data from a toxic release inventory used to conduct analyses for the last Health Risk Assessment (HRA) done by Phillips 66, pursuant to the requirements of AB2588.[80] That HRA was conducted in 2007, was based on an emissions inventory taken in 2004, and was used for the Throughput Increase Project Health Risk Analysis in 2010. Although the 2004 data was updated in 2010, in order to assess the potential impacts from the Refinery's Throughput Increase Project, it fails to state a proper baseline for the purpose of identifying the current level of DPM emissions. CBE-13

---

[77] *Id*.
[78] DEIR, 4.3-36; *and see*, California Air Resources Board Toxic Air Contaminant Identification List, available at: http://www.arb.ca.gov/toxics/cattable.htm#Note 1, last accessed, Jan. 26, 2014.
[79] DEIR 4.3- 18.
[80] *Id*.

As described in more detail, *infra*, the CEQA Guidelines state that the baseline for a project should consist of "the physical environmental conditions … as they exist *at the time the notice of preparation is published*."[81] The DEIR's reliance on emissions inventories from 2004, even as updated in 2010, not only fails to meet CEQA's requirement that a baseline reflect conditions at the time of the NOP, but such data also fails to provide an accurate depiction of the refinery's true emission levels throughout the life of the Project. The DEIR admits that as of 2013 the Refinery's throughput levels and operating capacity do not reflect the modifications of the Throughput Increase Project.[82] Setting aside the contradiction embodied by the DEIR's reliance on data used for the purpose of that Project's environmental analyses, when at the same time it fails to disclose the relationship between the two projects, the DEIR states that the Refinery emissions levels are based on operations up to the facility's full permitted throughput capacity. This alone appears to violate CEQA's requirement to use actual, rather than permitted emissions, as the project baseline.[83] Yet, the DEIR goes on to state that such emissions levels do not reflect the change in operational capacity enabled by the Throughput Increase Project. Thus, the permitted levels, even as of 2013, still fail to provide an accurate depiction of the existing environmental conditions, of this Project, as this Project is integrally related to the Throughput Increase Project.[84] CBE-13

Finally, as a result of the DEIR's failed analysis of the range of potential DPM emissions the DEIR underestimates the mitigation necessary to prevent harmful impacts caused by DPM. For example, the DEIR provides that it will address the increase in diesel emissions during construction and operations by watering exposed areas 3 times per day for 61% fugitive dust control; that it will require reduced vehicle speeds to 15 mph and the use of Tier 3 engines with DPM on construction equipment above 100 hp.[85] It further states that it will confer with SLOAPCD, prior to and during Project operations to develop plans to address the Project's above threshold emissions levels, including achieving off site emissions reductions, in order to account for those emissions that surpass the County's applicable threshold levels.[86] As noted throughout this comment, such deferred mitigation activities are improper under CEQA.

(iv) The DEIR Fails to Identify or Mitigate Additional Impacts of Emissions Resulting from the Project's Change in Crude Slate.

This Project enables the Santa Maria facility to receive new sources of crude, whose chemical composition, including chemicals mixed to enable transport and further processing at the Rodeo facility remain undisclosed, and therefore, cannot be analyzed for their impacts.[87] This leaves such impacts without mitigation or alternatives analyses, thwarting the entire purpose of the document, in violation of CEQA.[88] CBE-14

[81] CEQA Guidelines, 14. Cal. Code Reg. § 15125(a).
[82] DEIR 4.3-21.
[83] *See* Exhibit 25.
[84] *See supra* Section I.A.
[85] DEIR 4.3-35.
[86] *Id*.
[87] *See supra* and Fox Santa Maria Report.
[88] *See Berkeley Keep Jets Over the Bay Comm. v. Bd. of Port Comm'rs*, *supra*, 91 Cal.App.4th 1344, 1355

In addition to generally requiring more energy, and power generation to refine, the composition of tar sands crudes is chemically different from other heavy, locally sourced crudes, currently processed at the Santa Maria facility, and/or transported by pipeline to Rodeo. By their composition, tar sands are heavier, denser, and have higher sulfur contents than locally sourced crudes.[89] As outlined above, tar sands crudes are distinct from even the heaviest of crudes currently processed at the Refinery, for two principal reasons : (1) the unique chemical composition of the bitumen itself; and (2) the presence of large quantities of volatile diluent containing high levels of VOCs, TACs and HAPs. If released, these air pollutants amount to increased emissions that would result in significant public health and air quality impacts not addressed in the DEIR.

As a result, the DEIR fails to account for significant increases in overall emission estimates, including those of DPM, potent carcinogens such as benzene, toxic sulfur compounds that would individually and cumulatively cause malodors, and degrade ambient air quality; and a dramatic increase in incidents of accidental releases adversely affecting the health of workers and residents throughout the County, and even along the rail route up and down the West Coast. Furthermore, the high acid levels in these crudes and their semi-refined products would accelerate corrosion of refinery components, contributing to equipment failure, more accidental releases, and again, risking harm to both worker and public health and safety.

CBE-14

Bitumen Chemical Composition

Bitumen is composed of higher molecular weight chemicals, including large amounts of benzene, toluene, xylenes, and other heavy metals, present in both state and federal toxic emissions inventories, and therefore of particular concern to both federal and state regulatory agencies.[90] Benzene has a high cancer potency and is known to cause severe reproductive, developmental and immune systems impacts at even low exposure levels.[91] Systemic benzene poisoning, a long term exposure risk, includes the potential for severe hemorrhages, and may at times result in fatality.[92] Concentrated, acute exposure levels have also been known to cause headaches, and nausea.[93] While less information is available relating to longer term systemic and acute exposure levels to ethylbenzene, toluene and xylene, in California, the toxicity and risk levels of the three are currently under CARB scientific review.[94]

The U.S. Geological Survey reports that "natural bitumen," the source of all Canadian tar sands-derived oils, contains 102 times more copper, 21 times more vanadium, 11 times more sulfur, six times more nitrogen, 11 times more nickel, and 5 times more lead than conventional

---

[89] Fox Santa Maria Report at 26.
[90] *See, e.g.*, United States EPA, Clean Air Act 1990 List of Hazardous Air Pollutants, available at: http://www.epa.gov/ttn/atw/orig189.html, last accessed on Jan 26, 2014; *see also*, California Air Resources Board Toxic air Contaminant Identification List, available at: http://www.arb.ca.gov/toxics/cattable.htm#Note 1, last accessed on Jan 26, 2014.
[91] Determination of Acute Reerence Exposure Levels for Airborne Toxicants, March 1999, Acute Toxic Summary, BENZENE, available at: http://www.oehha.ca.gov/air/acute_rels/pdf/71432A.pdf, last accessed, Jan. 26, 2014.
[92] *Id*.
[93] *Id*.
[94] California Air Resources Board, Toxic Air Contaminant Identification List, available at: http://www.arb.ca.gov/toxics/cattable.htm#Note 1, last accessed, Jan. 26, 2014.

heavy crude oil, including even the heaviest of "American crudes," which, according to Phillips 66, comprise the majority of the crude slate currently processed at the Refinery.[95] The environmental damage caused by these contaminants, when released includes acid rain; harmful bioaccumulation of the contaminants; the formation of ground-level ozone and smog; visibility impairment; odor impacts affecting residents near the Refinery; accidental releases due to corrosion of refinery equipment; and depletion of soil nutrients.[96]

Currently, the level of bitumen present in the refinery's overall crude slate is as low as 2 - 7%.[97] Given this Project's overall components, including those that are unaddressed in the DEIR, such as the Throughput Increase Project and its resulting dramatic increase in process capacity at Santa Maria, this level of tar sands crude present in the overall crude slate will increase dramatically. The Project may in fact increase the import of heavy tar sands bitumen crudes by up to the entire permitted capacity of the Refinery.[98] This means, that there will be a remarkable increase not only in the content of lead and other metals listed above contained in the crude itself, but also in derivative coke and coke products, transported out of the refinery.[99] Moreover, because diluents also have a notably low molecular weight, and a high vapor pressure, they are highly prone to cause fugitive, gaseous releases by increasing vapor pressure in various refinery operation components, including rail cars and pipelines used for transport.[100] Nevertheless, the DEIR fails to identify, analyze or mitigate the wholly foreseeable Project emissions of these contaminants. CBE-14

For instance, the DEIR does not disclose BTEX concentrations either in the baseline crude slate or in the range of crudes that will be imported by way of the Project.[101] BTEX levels in diluent generally range from about 27,000 ppm to 60,900 ppm.[102] The BTEX in dilbits, blended from these diluents materials in turn, ranges from 8,000 ppm to 12,300 ppm.[103] Again, because of the high vapor rate that is characteristic of the diluents, and thus also characteristic of dilbit, dilbit will likewise quickly evaporate from any unseamed openings. Thus, whether because of pure diluents or the blended dilbit arriving to the Santa Maria facility by way of rail, and likewise being processed, or transported out of the facility by way of pipeline, a remarkably high level of hazardous toxic materials exists, well above the current baseline level that is implicated by this Project, and completely beyond the contents of the DEIR.

The DEIR's current, single mass fraction crude vapor speciation profile contained in the document's impacts analysis is wholly insufficient to address the potential risks associated with the increase in dilbit at the Refinery.[104] In order to assess and mitigate the potential impacts from the increased concentration of TACs, and HAPs, and their associated risk of causing serious harm to human health and environment, the DEIR should, at a minimum, include the amount of

---

[95] Fox Santa Maria Report at 29.
[96] *Id.*
[97] Fox Santa Maria Report at 2.
[98] *Id.* at 28.
[99] *Id.* at 29.
[100] *Id.* at 22.
[101] *Id.* at 22
[102] *Id.*
[103] *Id.*
[104] *Id.* at 23.

diluents needed to enable efficient delivery and transport of tar sands crude into and out of the Santa Maria facility.

Overall, a switch in crude slate directly implicates additional HAPs to be emitted at many fugitive components in the Refinery, including both the Santa Maria and Rodeo facilities; through compressors, pumps, valves, fittings, and tanks, in far greater amounts than from the current baseline feedstock.[105] Moreover, when any amount of dilbit is released, the substance will generally create spills far more difficult to clean, or remedy, than those caused by even the heaviest of locally sourced crudes.[106] When held in a storage tank, pipe or rail car, diluents alone can also rapidly evaporate and escape through any unseamed openings[107] – another set of significant impacts the DEIR leaves unidentified, unaddressed and unmitigated. CBE-14

(v) The DEIR Fails to Identify Risks to Worker Health and Safety.

The DEIR fails to adequately identify the health risks posed to on-site workers as a result of the Project. While the DEIR states that there are health risks associated with exposure to carcinogenic compounds at the refinery, the DEIR fails to provide an assessment of how the increased exposure to carcinogens, stemming from the project, will impact on-site workers.[108] Thus, the DEIR further fails to identify these critical potential impacts.

Workers at both of Phillips 66's San Francisco Refinery facilities will bear the brunt of the burden caused by vapor and other emissions of TACs and HAPs from various transport and refinery equipment. On-site workers will also be on the frontlines of any accidents, spills or other hazards caused by the Project, and therefore are particularly susceptible to suffer from the most serious health impacts, that may stem from this Project.[109] Because of the TACs and HAPs present in the tar sands bitumen crudes and in their blended diluents, the County must require a full HRA analysis that accounts for the change in crude slate. Currently, the DEIR cites to the HRA used for the Throughput Increase Project, yet, fails to acknowledge the relationship between the two Projects. Such a blatant contradiction, that also confirms that these projects are piecemealed, should not stand. The DEIR ignores impacts to workers and the County should require a revised HRA that includes the added TAC and HAP burdens resulting from the combined components of the Throughput Increase, Propane Fuel Recovery, and Rail Spur Projects, prior to approving any EIR document, and certainly prior to Project approval. CBE-15

(vi) The DEIR Fails to Identify Cumulative Impacts to Public Health.

The DEIR omits a necessary analysis of cumulative impacts of the Project, one of CEQA's most vital requirements.[110] An EIR must "discuss cumulative impacts of a project when the project's incremental effect is cumulatively considerable."[111] Furthermore, a lead CBE-16

[105] *Id.* at 16.
[106] *Id.* at 21.
[107] *Id.*
[108] DEIR, 4.3-48.
[109] Fox Santa Maria Report at 24.
[110] *See* Pub.Res.Code § 21082 (referring to the CEQA Guidelines §§ 15130(a)(1) and 15355 for the applicable definition of cumulative impacts); *see also*, *Bozung v. Local Agency Formation Commission* (1975) 13 Cal.3d 263, 283
[111] CEQA Guidelines § 15130(a) (emphasis added).

agency must find "that a project may have a significant effect on the environment" when "[t]he project has possible environmental effects that are individually limited but cumulatively considerable." [112] The Guidelines define "cumulatively considerable" to mean "that the incremental effects of an individual project are significant when viewed in connection with the effects of past projects, the effects of other current projects, and the effects of probable future projects."[113] The purpose of this analysis is to avoid considering projects in a vacuum, wherein seemingly benign impacts could lead to severe environmental harm, in light of the environmental context.[114] The DEIR must, therefore, "demonstrate that the significant environmental impacts of the proposed project were adequately investigated[,] discussed[,] and … considered in the full environmental context," including existing pollution burdens in the areas that are directly impacted by the Project.[115]

Santa Maria, its surrounding communities including the cities of Nipomo and Guadalupe, as well as Rodeo, and its surrounding communities, have all been identified by the Office of Environmental Health and Hazards Assessment (OEHHA) as bearing a concentrated burden of health hazards resulting from various pollution sources, including the Santa Maria and Rodeo Refinery facilities.[116] This means that impacts, which may appear insignificant by themselves, are indeed significant when considered in the context of and in combination with existing sources of environmental impacts, which often tend to be more concentrated in some areas, such as those where these two facilities are located.

CBE-16

With regard to the Santa Maria facility, Santa Maria, Nipomo and Guadalupe score high on the OEHHA's indicators used to highlight environmental justice, or highly burdened communities.[117] Some of these indicators or factors include: number of pollution sources, including active and inactive waste cleanup sites; heavy industrial facilities, such as refineries; and hazardous waste, groundwater waste, presence of ozone and ozone precursors in the ambient environment, among others. The public health indicators examined further include, *inter alia*, asthma and low birth weight rates.

Nipomo has a high concentration of solid waste sites, including both active and in-active clean-up sites.[118] This means that the residents of the Nipomo already bear the burden of existing concentrated mal-odors, methane and carbon dioxide emissions from those facilities

---

[112] CEQA Guidelines § 15065(a).
[113] *Id.*
[114] *San Joaquin Raptor/Wildlife Rescue Center v. County of Stanislaus* (1994) 27 Cal.App.4th at 720.
[115] CEQA Guidelines § 15125(c).
[116] OEHHA Cal Enviro Screen 1.1 (amended), Statewide Zip code Results, Nipomo, Guadalupe, Santa Maria, available at: http://oehha.maps.arcgis.com/apps/OnePane/basicviewer/index.html?appid=1d202d7d9dc84120ba5aac97f8b39c56, last accessed, Jan. 26, 2014; and Zip code Results, Rodeo, available at: http://oehha.maps.arcgis.com/apps/OnePane/basicviewer/index.html?appid=1d202d7d9dc84120ba5aac97f8b39c56, last accessed, Jan., 26, 2014.
[117] *See*, OEHHA Cal Enviro Screen 1.1, Statewide Zip code Results, Nipomo, Guadalupe, Santa Maria, *supra*, at: http://oehha.maps.arcgis.com/apps/OnePane/basicviewer/index.html?appid=1d202d7d9dc84120ba5aac97f8b39c56.
[118] OEHHA Cal Enviro Screen 1.1 (amended), Statewide Zip code Results, available at: http://oehha.maps.arcgis.com/apps/OnePane/basicviewer/index.html?appid=1d202d7d9dc84120ba5aac97f8b39c56, last accessed, Jan. 26, 2014.

alone.[119] Nipomo also scores within the top 3% of the state's highest Toxic Release Inventory chemical burdens and within the top 1% of the state's burden from pollution caused by pesticide use.[120] Guadalupe is identified as a linguistically isolated city, and similar to Nipomo has a high concentration of hazardous waste facilities.[121] It also bears the impacts of a high concentration of emissions from other concentrated pollution stationary sources, such as the Santa Maria Refinery.[122] The combined impacts of these factors renders that city and the surrounding area, a particularly vulnerable community that suffers a high health burden from existing contaminating sources. [123]

Much like Nipomo and Guadalupe, Rodeo also ranks in the top 8% of the state's highest concentration of hazardous waste facilities, has a high concentration of contamination from Toxic Release Inventory chemicals, ranking in the top 3% for that factor.[124] Moreover, Rodeo also suffers from a high rate of low birth weights and asthma, ranking in the top 1 and 16% for each, respectively.[125]

The particular vulnerabilities of these communities, and the existing pollution burdens that exist in each, even without the added impacts of the proposed Rail Spur Project, in combination with its related components in both the Throughput Increase and Propane Fuel Recovery Projects, demand a full analysis of the additional burden that will result from this Project. As detailed above, the Project's emissions and impacts analysis is incomplete, as a result of the DEIR's failure to disclose information relating to the Refinery's overall shift in crude slate. Even absent an analysis that includes the Refinery's change in crude, those emissions that are currently identified in the DEIR as being less than significant, are not analyzed in the context of the existing pollution burdens in either Santa Maria and its surrounding communities, or Rodeo. This analysis is an integral component of CEQA, one that the DEIR illegally omitted.[126]

CBE-16

Overall, the DEIR's failure to disclose the exact qualities of its projected and foreseeable feedstock switch preclude any meaningful analysis of the impact of this Project on worker and community health. The DEIR simply does not provide enough information. Even if the Project were to implement the DEIR's claimed Bakken feedstock, Bakken crude is a light and volatile crude with a high API gravity and very low sulfur content, significantly distinct from the current crude feedstock processed at the Refinery, and also distinct from tar sands crudes.[127] When refined, it yields very little residuum, which is generally used for coker feeds, but it yields large amounts of gasoline.[128] If the crude slate were switched to Bakken, combustion emissions at the

---

[119] OEHHA, California *Communities Environmental Health Screening Tool, Version 1.1 Guidance and Screening Tool*, September 2013 Update, Matthew Rodriguez, Cal EPA, and George V. Alexeeff, Ph.D., Director of OEHHA, available at: http://oehha.ca.gov/ej/pdf/CalEnviroscreenVer11report.pdf, last accessed, Jan 26, 2014.
[120] *See* OEHHA Cal Enviro Screen 1.1, *supra*, and *see, Id.*
[121] *Id*.
[122] *Id*.
[123] *Id*.
[124] OEHHA, Cal Enviro Screen 1.1 (amended), Statewide Zip code Results, Rodeo, at: http://oehha.maps.arcgis.com/apps/OnePane/basicviewer/index.html?appid=1d202d7d9dc84120ba5aac97f8b39c56.
[125] *Id*.
[126] CEQA Guidelines §§ 15064(d), 15125(c); *see also, Kings County Farm Bureau*, 221 Cal. App. 3d 692, 729.
[127] *Id*. (citations omitted)
[128] Fox Santa Maria Report at 9.

Santa Maria Refinery may decrease overall, however, VOC and other HAP emissions would significantly increase, as well as the risks to worker and public health and safety.[129] CBE-16

B. The DEIR Fails to Adequately Analyze and Mitigate the Project's Air Quality Impacts.

The EIR's analysis of the Project's criteria pollutant impacts is riddled with errors. We highlight five: first, the EIR relies on an inadequate study area and therefore underestimates the Project's potential to result in a substantial increase in criteria pollutant emissions. Second, it underestimates or ignores altogether emissions of criteria pollutants. Third, the Project relies on an illegal use of Emission Reduction Credits. Fourth, the EIR's analysis completely underestimates indirect emissions. Fifth, the EIR's analysis is predicated on a faulty and illegal baseline. The end result is that the Project will result in significant air quality impacts that the EIR fails to identify or mitigate. CBE-17

(i) The DEIR Incorporates an Inadequate Study Area.

The DEIR substantially underestimates the Project's increase in greenhouse gas ("GHG") and criteria air pollutant emissions because it relies on an artificially and unnecessarily constrained study area. The DEIR's air impact analysis is unnecessarily limited.[130] However, it is clear that the air quality impacts of the Proposed Project will regularly extend far beyond the county line, or even other areas that the DEIR makes brief mention of, and the DEIR fails to account for that.

The study area of an EIR must include "the area which will be affected by a proposed project."[131] There is no predefined geographic limit to where impacts can occur, and it is well established that "the area that will be affected by a proposed project may be greater than the area encompassed by the project itself."[132] This broad understanding of the geographic scope of an EIR's analysis is essential, and "the purpose of CEQA would be undermined if the appropriate governmental agencies went forward without an awareness of the effects a project will have on areas outside of the boundaries of the project area."[133] CBE-18

By employing an artificially constrained study area, the DEIR fails to assess the air quality impacts of operational emissions outside of San Luis Obispo County. Although the DEIR does calculate both GHG and criteria emissions outside of the County, it neither evaluates the significance of these emissions, nor discusses any mitigation measures. This is particularly problematic. For example, locomotive emissions outside of the County will be significant—the DEIR calculates locomotive GHG emissions outside of the County as over 60,000 $MTCO_2E$, which accounts for nearly 80% of the total operational GHG emissions of the proposed project.[134] Similarly, the criteria emissions from locomotives outside of San Luis Obispo County

---

[129] *Id.* at 10.
[130] See DEIR at 4.3-1
[131] See Cal. Pub. Res. Code § 21060.5 (defining "environment" as "the physical conditions that exist within the area which will be affected by a proposed project").
[132] *Save the Plastic Bag Coalition v. City of Manhattan Beach* (2011) 52 Cal.4th 155, 173.
[133] Muzzy Ranch Co. v. Solano Cnty. Airport Land Use Com. (2007) 41 Cal. 4th 372, 387.
[134] See DEIR at 4.3-50, Table 4.3.15.

are significant.[135] Among other emissions, the DEIR fails to evaluate the impacts of 160 tons of NO_x, 5 tons of PM_{10}, and nearly 25 tons of CO that will be emitted each year in California outside the County borders.[136]

By artificially limiting the geographic scope of the analysis to air pollutants emitted within the boundaries of San Luis Obispo County, the DEIR substantially underestimates the significant air quality impacts of transporting crude oil by rail from oilfields across North America to the Sana Maria facility. The DEIR should be revised to evaluate the Project's emissions outside of the County, and to discuss mitigation for those emissions. CBE-18

(ii) The DEIR Does Not Analyze Emissions from All of the Project's Components.

The DEIR fails to assess emissions from all components of the Project. Most blatantly, the DEIR fails to assess the air quality impacts of the San Francisco Refinery as a whole, and includes no analysis of the emissions that will be caused at the Rodeo component as a result of the rail spur extension at the Santa Maria component.

CEQA requires that an EIR consider the impacts of a whole project, not simply its constituent parts, when discussing the environmental effects of the project.[137] As discussed *supra* in Part I, an essential element of this Project is a shift to a different-quality crude slate, and the Santa Maria Throughput Expansion, Rodeo Propane Recovery Project and this Project are at least three integral components of this piecemealed project. Consequently, this DEIR should include an analysis of the full scope of air quality impacts resulting from this larger piecemealed project, not just the impacts from the Rail Spur Extension Project. CBE-19

Most importantly, because the DEIR does not disclose the quality of crude oil that will be brought to the San Francisco Refinery as a result of the rail spur expansion, the DEIR cannot analyze the severe air quality impacts that will result from processing different-quality crude. The proposed rail spur extension will allow the San Francisco Refinery to import different or lower-quality crude oil from oilfields throughout North America.[138] The refining of this different quality crude slate can be reasonably expected to require an increase in frequency and magnitude of flaring at Santa Maria, since dirtier crude processing would likely increase "malfunction" and "emergency" flaring.[139] Moreover, a malfunction or emergency upset causes the whole contents of one or more major process vessels to depressurize suddenly, and each flaring event can cause acute exposures to emitted pollutants, which is not discussed in the DEIR.[140] Each of these flaring episodes comes with associated and extremely high levels of additional pollution.

In addition, the daily operation and refining of a different quality crude slate will result in increased daily emissions of pollutants, including many toxic/PM precursor/smog-forming air

---

[135] See DEIR at 4.3-44, Table 4.3.13.
[136] See DEIR at 4.3-44, Table 4.3.13.
[137] *See* CEQA Guidelines, 14 Cal. Code Reg. § 15003(h); Citizens Assoc. for Sensible Degvelopment of Bishop Area v. County of Inyo (1985) 172 Cal.App.3d 151.
[138] See DEIR at 2-21.
[139] *See* Karras Decl. (Rodeo).
[140] *See* Karras Decl. (Rodeo).

pollutants from burning more fuel per barrel to process the likely denser/dirtier crude feeds.[141] An increase in fugitive emissions and heightened concentrations of toxic VOCs can also be anticipated as a result of the higher pressure processing of denser crudes.[142] The DEIR does not analyze these effects, and consequently the DEIR also fails to discuss mitigation measures for these impacts.

CBE-19

The EIR process for this Project presents a critical opportunity to engage in a genuine and thorough review of the full environmental impacts of this Project. By failing to analyze the emissions from all components of the larger project, the DEIR obfuscates the full extent of air quality impacts, and renders informed decision-making on this Project impossible.

(iii) The DEIR Inappropriately Relies on Emission Reduction Credits Requested by the Rodeo Facility.

The DEIR underestimates the SO_2 emissions of the Project. The DEIR fails to disclose an application for Emission Reduction Credits ("ERCs") that would likely result in future SO_2 emissions increases at Phillips 66's San Francisco Refinery. The application was filed for the Rodeo facility, but it is equally relevant here because the Rodeo and Santa Maria facilities are, by Phillips 66's own admission, the two component parts of the San Francisco Refinery.

CBE-20

Phillips 66 asserts that its Rodeo Propane Recovery Project will result in a reduction in SO_2 emissions, and has requested 174.7 tons per year of SO_2 ERCs for that reduction.[143] According to Phillips 66, "[o]f this amount, 7.61 tpy will be used to offset project SO_2 increases so that there will be no net increase in SO_2 emissions from the project (see Table 3-1). The remaining 167.1 tpy of SO_2 (174 tpy minus 7.61 tpy) will be banked as ERCs."[144] The assertions in this application are contrary to the assertions in the EIR for the Rodeo Propane Recovery Project, which claims that the Rodeo project will reduce refinery-wide SO_2 emissions "by at least 50%."[145] Banking ERCs equal to the claimed emission reduction would allow the refinery to increase its SO_2 emissions in the future, thus negating any claimed SO_2 reduction benefits.

The DEIR must identify and analyze the impacts of these SO_2 ERCs in order to capture the full air quality impacts of the Project, inextricably linked to the Rodeo facility. The failure to acknowledge and assess these impacts is a clear violation of CEQA's mandate to identify and avoid the significant effects of a project on the environment.

(iv) The DEIR Fails to Adequately Analyze Indirect Emissions.

CBE-21

CEQA requires an EIR to consider both direct and indirect impacts of a proposed project.[146] Indirect impacts are those that are "caused by the project and are later in time or farther removed in distance, but are still reasonably foreseeable."[147] The scale of the Project's

[141] *See* Karras Decl. (Rodeo).
[142] *See* Karras Decl. (Rodeo).
[143] *See* Karras Decl. (Rodeo).
[144] Air Permit Application at 17, Section 3.4 (Air Permit App Sections 1–3).
[145] Rodeo PRP EIR at ES-2, 3-5, and 4.3-19.
[146] CEQA Guidelines, 14 Cal. Code Reg. § 15358(a).
[147] CEQA Guidelines, 14 Cal. Code Reg. § 15358(a)(2).

activities is large enough that off-site emissions could reasonably be affected. Moreover, the indirect nature of these wholly foreseeable off-site emissions cannot be ignored as "it is inaccurate and misleading to divide the project's air emissions analysis into on-site and secondary emissions for purposes of invoking the presumption the project will have no significant impact."[148] Thus, the DEIR requires a sufficient analysis and discussion of these sources. For example, in *North Coast Alliance*, the lead agency's analysis of the identification of indirect sources of GHG emissions from electrical demand was found sufficient given that the agency conducted a thorough analysis of the project's demand on a utility's electricity generation and whether it would increase production at any fossil-fuel power plants.[149]

The DEIR does not acknowledge a switch to a lower or different quality crude feedstock and therefore does not address the indirect emissions associated with that switch, for example, greenhouse gas emissions from crude source demand activities such as extraction and front-end refining and diluting.

Similarly, the DEIR does not adequately analyze the substantial air quality impacts associated with the transport of crude oil from new sources across North America. The refinery currently receives all crude oil for processing by pipeline,[150] while the Project proposes to import crude oil by rail from "oilfields throughout North America."[151] The Project would result in up to 250 trains per year moving from Canada or North Dakota to Northern California, through some of the most densely populated regions of the state, along the coast to the Santa Maria Refinery in Central California.[152] Evidently, the air quality impacts, for instance of GHGs, of such extensive rail transport as compared to current impacts of local pipeline transport will be substantial and severe. The DEIR fails entirely to assess the significance of these impacts or to propose mitigation for these impacts. By limiting the study area to the boundaries of San Luis Obispo County, as discussed *supra* in Part II.B.1, the DEIR omits entirely a significant portion of the emissions that will result from the Project, and thus vastly underestimates the Project's significant air quality impacts. CBE-21

Additionally, as noted above, the DEIR fails to account for emissions associated with the Rodeo facility. These include increased criteria pollutant and GHG emissions resulting from the processing of different or lower-quality crude, as well as the off-site emissions from the propane and butane produced via the Propane Recovery Project and the off-site emissions associated with natural gas demand activities. The DEIR must, at the least, identify these foreseeable activities and then adequately analyze and estimate how much the Project is likely to increase emissions from all of these sources, regardless of their location.

(v) The DEIR Uses an Inappropriate Baseline Environmental Setting, Rendering its Air Quality Analysis Unreliable. CBE-22

[148] Kings County Farm Bureau v. City of Hanford (1990) 221 Cal. App. 3d 692, 717.
[149] North Coast Alliance v. Marin Mun. Water Dist. Bd. of Directors, 216 Cal.App.4th 614, 652 ("Based on this evidence, the EIR concluded the Project's energy demand would not result in an indirect increase in pollutant emissions.").
[150] DEIR at 2-27.
[151] DEIR at ES-3, 1-4, 2-21.
[152] See DEIR at 2-21 (estimating a maximum of 250 trains per year).

The baseline for a project consists of "the physical environmental conditions in the vicinity of the project, as they exist at the time the notice of preparation is published."[153] As the DEIR acknowledges, emissions resulting from current refinery operations are a key component of baseline air quality.[154] However, instead of providing data on current refinery emissions, the DEIR instead relies on the emissions limitations in the refinery's permits to establish baseline air quality.[155]

This reliance on permit limitations instead of actual emissions to establish baseline air quality is a clear violation of CEQA. This precise discrepancy was at issue in *Communities for a Better Environment v. South Coast Air Quality Management District*, where the Supreme Court rejected the Air District's argument that permit levels should be used to establish the baseline.[156] The Air District argued that for a project employing existing equipment, the baseline should be the maximum permitted operating capacity of the equipment, even if the equipment is operating below those levels when the Notice of Preparation is issued.[157] The Supreme Court rejected the District's illegal permit based approach, and clarified the need for the proper assessment of baseline for review under CEQA.[158]

CBE-22

The DEIR provides no information about the actual emissions levels at the Refinery, and thus fails to provide sufficient information to establish an appropriate baseline environmental setting. The DEIR should be revised to provide this information and an accurate and informative baseline as required under CEQA review.

C. The DEIR Fails to Adequately Disclose, Analyze or Mitigate Project-related Hazards and Public Safety Risks.

An EIR must provide sufficient information to evaluate all potentially significant impacts of a project, including public safety risks due to accidents or, "information about how adverse the adverse impact will be."[159] Without this information, it is impossible for County decision makers and the public to evaluate the extent and severity of the Project's impacts relevant to public safety. The DEIR fails to meet this burden in three respects: (1) it continues to omit relevant and indispensable information regarding crude quality and therefore never addresses resultant safety impacts; (2) it illegally defers mitigation in relying on safety precautions and anticipated plans that are not yet approved; and (3) it includes a flawed and under-estimated analysis of the risk of oil spill or train car derailment.[160] The DEIR therefore fails to provide any currently real and enforceable measures and performance standards and can provide no assurance the Project's impacts related to hazards would not be significant, or that they would be mitigated at all.[161]

CBE-23

---

[153] CEQA Guidelines, 14. Cal. Code Reg. § 15125(a).
[154] See DEIR at 4.3-17 to 4.3-22.
[155] DEIR at 4.3-18 to 4.3-19.
[156] Communities for a Better Env't v. S. Coast Air Quality Management District (2010) 48 Cal. 4th 310.
[157] CBE v. SCAQMD, 48 Cal. 4th at 320.
[158] *Id.*
[159] *Santiago County Water District v. County of Orange* (1981) 118 Cal. App. 818, 831.
[160] *See* DEIR at 4.7.
[161] *See Sacramento Old City Ass'n v. City Council* (1991) 229 Cal. App. 3d 1011.

Scope of Analysis/Federal Preemption

As an initial matter, the DEIR's Study Area and Scope of analysis of public safety risks is unnecessarily limited to the vicinity of the Rail Spur.[162] Although the DEIR provides a detailed description of catastrophic failure scenarios, it does not analyze whether those impacts would prove significant, to any degree of specificity, in regards to this Project. The DEIR's analysis of risks to public safety ends with the Santa Maria facility boundary.[163]

The implications of this Project, however, include approximately 400 tanker cars per week moving up and down the West Coast, likely containing extremely hazardous tar sands crude, or highly flammable Bakken.[164] The DEIR simply analyzes the risks of spill and derailment in regards to the unloading facility at the refinery and in the vicinity of the Union Pacific Railway right of way. CBE-24

The DEIR claims that certain train movements may be "preempted from local and state environmental regulations by federal law under the Interstate Commerce Commission Termination Act ("ICCTA") of 1995 . . . ." However, ICCTA does not preempt CEQA. Indeed, no published decision has so held. Accordingly, the DEIR must analyze *all* hazard and public safety impacts created by the Rail Spur Project, regardless of whether they occur on the project site or not.

(i) The DEIR Fails to Discuss the Public Safety Risks of Refining a Different or Lower Quality Crude Oil Feedstock. CBE-25

The DEIR's failure to disclose the company's switch to crude with a significantly different chemical composition, and even to tar sands crude, renders the instant analysis of public safety impacts inherently flawed. It fails to identify the varied risks associated with refining, storing and transporting these crudes.

(a) The DEIR does Not Adequately Consider Accidental Releases at the San Francisco Refinery.

It is uncertain whether the Santa Maria facility can handle the unique chemical composition of tar sands crudes without significant upgrades. Higher acid and/or sulfur content in a crude may increase the risk of corrosion to refinery equipment and pipes, which in turn can lead to leaks, explosion or fire.[165] There is no assurance that required metallurgical upgrades have occurred at the Santa Maria facility to cope with the different composition of "advantaged CBE-26

[162] DEIR at 4.7-1, 4.7-2. Section 4.7.1.1 anticipates the scope of review: "The area that could be impacted by a release also includes all rail routes in the County and any routes associated with existing trucking of crude oil or associated facility hazardous materials." However, the DEIR, after an extensive review of the applicable Federal, State and local laws, merely analyzes project impacts immediately within the vicinity of the rail spur (section 4.7.4).
[163] The company proposes only two mitigation measures (registration of railroad crossings within the Santa Maria facility with the Federal Department of Transportation and installation of crossbucks at those crossings, DEIR at 4.7). This places full reliance on the federal government and ignores explicitly delegated authority outlined throughout the DEIR, for instance the CPUC's regulation in regards to railroads.
[164] See Fox Rodeo Report and DEIR at 4.12-21and 2-21.
[165] *See* http://www.dir.ca.gov/DIRNews/2013/IR2013-06.html

crude." Such refinery infrastructure changes are extensive and not required by any regulatory framework. As noted above, changes in crude slate at the Chevron Refinery in Richmond suggests that failure to perform required metallurgical upgrades can lead to catastrophic accidents.[166]

A crude slate change could result in corrosion, a root cause of significant accidental releases, even if the crude slate is within the current design slate basis, due to compositional differences. In fact, although the sulfur composition at Chevron Richmond remained within the design range,[167] the gradual and significant change over time caused increased corrosion rates in the 4-sidecut line, which led to a catastrophic pipe failure in the #4 Crude Unit on August 6, 2012. This release sent 15,000 people to nearby hospitals and created huge black clouds of pollution billowing across the Bay. It also put workers at the unit in grave danger, with several escaping the gas cloud and inferno narrowly.

CBE-26

Incidents such as those that occurred at the Chevron Richmond Refinery confirm that refining oil is an inherently dangerous process. According to the report "Improving Public and Worker Safety at Oil Refineries" prepared by Governor Jerry Brown's Office, every week, the U.S. Department of Energy receives reports on process safety incidents in the U.S. refinery industry.[168] The week that ended March 14, 2013 had 26 reported incidents, including unplanned flaring at the Torrance, California Exxon Mobil Refinery; an unplanned shut-down of the hydrocracking unit at Valero's Benicia, California facility; and the unexplained restart of a major electrical unit at the Chevron Refinery in Richmond, California.[169] Recent news reports tell of multiple catastrophic events that have resulted in fatalities, serious injuries, and devastating environmental effects.[170] The DEIR fails to account for any preventative or responsive precautions to address the Project's goal of accessing a wide range of "advantaged crudes."

(b) The DEIR does Not Adequately Consider the Impacts of Transport of Tar Sands Crude by Rail.

CBE-27

---

[166] U.S. Chemical Safety and Hazard Investigation Board, Interim Investigation Report, Chevron Richmond Refinery Fire, Chevron Richmond Refinery, Richmond, California, August 6, 2012, Draft for Public Release, April 15, 2013, available at, http://www.csb.gov/chevron-refinery- fire/.

[167] US Chemical Safety and Hazard Investigation Board, 2013, p.34 ("While Chevron stayed under its established crude unit design basis for total wt. % sulfur of the blended feed to the crude unit, the sulfur composition significantly increased over time. This increase in sulfur composition likely increased corrosion rates in the 4-sidecut line.").

[168] *See* Improving Public and Worker Safety at Oil Refineries Draft Report of the Interagency Working Group on Refinery Safety Governor Jerry Brown, dated July 2013.

[169] *Id.*

[170] *See* Associated Press, *Crews slowed by Heat in attacking Calif. rail fire*, NBC News, Aug 24, 2011 http://www.nbcnews.com/id/44259169/ns/us_news-life/t/crews-slowed-heat-attacking-calif-rail-fire/; and Bret Schulte, *Oil Spill Spotlights Keystone XL Issue: Is Canadian Crude Worse?*, Apr. 4, 2013. http://news.nationalgeographic.com/news/energy/2013/04/130405-arkansas-oil-spill-is-canadian-crude-worse/; and Marianne Lavelle, *Oil Train Crash Probe Raises Five Keys Issues on Cause*, National Geographic, Jul. 11, 2013. http://news.nationalgeographic.com/news/energy/2013/07/130711-oil-train-crash-five-key-issues/; and David Boroff, *At least eight injured, five critically, as explosions rock Blue Rhino propane gas plant in Florida*, National Geographic Jul. 30, 2013, http://www.nydailynews.com/news/national/15-missing-florida-explosions-article-1.1412355; and Matthias Gafni, *Benicia: Three Valero refinery rail cares filled with coke derail*, Contra Costa Times, Nov. 5, 2013, http://www.contracostatimes.com/news/ci_24458813/valero-refinery-rail-car-derails-benicia.

The Federal Railroad Administration has expressed concern about an increasing number of severe corrosion incidents found in rail tank cars and service equipment.[171] Further, there is a history of major spills, derailments and explosions of hazardous materials along California rail routes.[172] The New York Times even recently published an article: "Accidents Surge As Oil Industry Takes the Train."[173] Although the DEIR skims the surface of analysis of such impacts,[174] it fails to do so in regards to the Project itself, and in particular to the transport of tar sands and other crudes.

The DEIR does highlight the tragedy in Lac-Mégantic, Canada. Several derailed tank cars spilled oil resulting in multiple explosions and fires causing 47 fatalities, extensive damage to the town center and precipitated the evacuation of about 2,000 people from the surrounding area.[175] The transport of crude by rail also implicates significant hazards to public safety. Bakken itself is particularly flammable, and was the feedstock transported in Lac-Mégantic, but tar sands crude also contain the very dense and toxic diluted bitumen that the rail cars are likely to carry. These oils in particular pose an especially serious environmental and public health threat when accidentally released into the environment. The EPA recently noted that spills of diluted bitumen require a different response action or equipment than for conventional oil spills.[176] Dilbit spills are simply more difficult and more expensive to clean up.[177] A 2010 spill of tar sands oil in Michigan has left substantial amounts of the oil on the river bottom to this day, and a $1 billion clean-up continues.[178] Public health officials found numerous acute health impacts lasting for days and spanning numerous areas: Cardiovascular, dermal, gastrointestinal, neurological, ocular, renal, respiratory and other impacts.[179] Alternatively, should the project rely on rail transport of Bakken crude, equally serious unmitigated spill, fire and explosion hazards could result, albeit by somewhat different chemical mechanisms and associated safety system gaps, as the Lac–Mégantic incident examples tragically. The DEIR fails to sufficiently analyze any potentially similar impacts throughout California as a result of this Project, and completely omits any discussion beyond the Project's immediate vicinity, for instance, impacts resulting from increased traffic, train idling and old ageing train cars not equipped for these hazardous materials.

CBE-27

---

[171] See http://www.fra.dot.gov/eLib/details/L04717.
[172] For example, there was a very major spill into Upper Sacramento River in 1991. *See*, http://www.dfg.ca.gov/ospr/NRDA/Cantara.aspx.
[173] *See Accidents Surge as Oil Industry Takes the Train,* New York Times, Jan. 25 2014, available at http://www.nytimes.com/2014/01/26/business/energy-environment/accidents-surge-as-oil-industry-takes-the-train.html?hp&_r=1.
[174] *See* DEIR at 4.7.
[175] DEIR at 4.7-17.
[176] EPA, Comment letter to US Department of State regarding the Supplemental Draft Environmental Impact Statement from TransCanada's proposed Keystone XL project, 2013.
[177] Environmental Working Group, Poisons in the Pipeline, Tests Find Toxic Stew in Oil Spill, June 2013, page 6.
[178] *See* http://www.epa.gov/enbridgespill/.
[179] Michigan Department of Community Health, Acute Health Impacts of the Enbridge Oil Spill, November 2010. http://www.michigan.gov/documents/mdch/enbridge_oil_spill_epi_report_with_cover_11_22_1 0_339101_7.pdf (last accessed 19 June 2013); U.S Department of Health and Human Services and ATSDR, Kalamazoo River/Enbridge Spill: Evaluation of Crude Oil Release to Talmadge Creek and Kalamazoo River on Residential Drinking Water Wells in Nearby Communities, 27 February 2013, p. 90. http://www.michigan.gov/documents/mdch/enbridge_oil_spill_epi_report_with_cover_11_22_1 0_339101_7.pdf (last accessed 20 June 2013)

(ii) The DEIR's Analysis Illegally Defers Mitigation of Public Safety Precautions.

Formulation of mitigation measures should not be deferred until some future time.[180] Numerous cases illustrate that reliance on tentative plans for future mitigation after completion of the CEQA process significantly undermines CEQA's goals of full disclosure and informed decision making.[181] An EIR cannot rely on any management plans, studies, or reports developed after the EIR process.[182]

Mitigation Measure BIO-7 requires Phillips 66 to amend and submit for review and approval to the County Planning Department, its Santa Maria Refinery Spill Prevention, Control and Countermeasure Plan.[183] This amendment and review has not yet occurred, and will not occur until after the close of the CEQA process. CEQA specifically forbids any post-project approval bilateral negotiation between project proponent and lead agency.[184] The DEIR's cursory analysis is unclear regarding whether the Spill Prevention, Control and Countermeasure Plan will also address the risk of fire or explosion and danger to the public. This mitigation measure cannot comply with CEQA until the County has had an opportunity to review, approve and include that Countermeasure Plan in a revised document.

The DEIR also includes an exhaustive discussion of certain State regulatory bodies charged with public safety duties. The DEIR does no more than highlight the current regulatory setting, with sparse discussion of relevance to the Project. For instance, the DEIR outlines the authority delegated to the California Public Utilities Commission to inspect and maintain safety at railroad crossings, yet does not make any demonstration that Phillips 66 has or will reach out to the Commission to institute proceedings to ensure safety given a higher frequency of rail cars and traffic or "virtual pipelines" of highly flammable material passing through some of the most densely populated and environmentally sensitive (e.g., water supply for most of the state) areas in the United States. [185] CBE-28

Similarly, the DEIR also notes the California Accident Release Prevention Program, which mirrors the Federal Risk Management program.[186] These programs would document hazard review, provide process hazard analyses, incident investigation, and ensures maintenance and mechanical integrity of the refinery.[187] The DEIR notes these critical requirements, however, "if applicable."[188] Its analysis has not only deferred mitigation of public safety impacts, but also pushes that mitigation beyond certainty.

The DEIR relies on plans that are not yet approved, and because it fails to provide enforceable measures and performance standards, there is no assurance the Project's impacts

---

[180] CEQA Guidelines section 15126.4(a)(1)(b).
[181] *See eg.* Communities for a Better Environment v. City of Richmond, 184 Cal. App. 4th 70, 92 (2010).
[182] *Id.*
[183] DEIR at 4.4-28.
[184] *Communities for a Better Environment* v. *City of Richmond*, 184 Cal. App. 4th at 93.
[185] DEIR at 4.7-45.
[186] DEIR at 4.7-51.
[187] *Id.*
[188] *Id.*

related to hazards would not be significant and that they would be mitigated at all.[189] A revised EIR must identify all feasible mitigation measures and analyze alternatives that would substantially lessen the significant impacts of the Project. CBE-28

(iii) The DEIR's Analysis of Risk of Oil Spill and Train Derailment is Innaccurate and Misleading.

In detailing the current setting of transporting crude by rail, the DEIR acknowledges the extent of dangers, for instance, the fatal accident in Lac-Mégantic, Canada.[190] The DEIR then begins its analysis of the risk of this similar Project, and either dispels those potential catastrophic incidents with either an assertion of improbability or a conclusory analysis.

An Inappropriate Threshold of Significance

First, the DEIR ignores the potentially catastrophic consequences of an accident by focusing on the alleged improbability of one occurring.[191] It finds the risk of oil spill to pose less than significant impact.

However, "a substantial, or potentially substantial, adverse change in any of the physical conditions within the area affected by the project," constitutes a significant effect on the environment.[192] Probability does not factor into the evaluation of this adverse change alone without consideration for the magnitude of potentially catastrophic harm; the correct inquiry is whether the potential for such an adverse change exists. Regardless, the many recent incidents involving crude shipped by rail have shown that such accidents are reasonably foreseeable. CBE-29

The DEIR instead incorporates a threshold of significance to measure risks to public safety that is based on probability.[193] The DEIR's analysis relies on the Santa Barbara County Public Safety Thresholds.[194] The analysis interprets the Santa Barbara thresholds to identify a significant impact based on "amber or red regions" of the Santa Barbara County Safety Criteria. These amber or red regions are determined by Fig. 4.7-5 in the DEIR. The amber or red regions are determined by comparing the number of injuries or fatalities of an activity with the frequency per year. This probability-based criteria is not compatible with CEQA. This is particularly the case for a "new" (transport of tar sands or Bakken crude) activity in a "virtual pipeline" that poses different impacts, making any historical analysis of frequency outdated and therefore irrelevant.

The DEIR commits the same error in regards to cumulative impacts: the analysis notes the proximity of the proposed Phillips pipeline (Pipeline Project) route would be located relatively close to the UPRR railroad in Price Canyon and the subsequent overlap in dangers if a derailed train/oil spill interacted with failure of the pipeline. The DEIR offers the assurance that

---

[189] *See Sacramento Old City Ass'n v. City Council* (1991) 229 Cal. App. 3d 1011.
[190] DEIR at 4.7-17.
[191] DEIR at 4.7.56.
[192] CEQA Guidelines section 15382.
[193] DEIR at 4.7-55.
[194] *Id.*

the resulting "oil spill and fire," is highly unlikely, and therefore considered less than significant.[195]

Second, the DEIR further dispels any significant risks to public safety on the basis of generalized and conclusory statements that are specifically prohibited under CEQA.[196] The following are examples:

> "With the increase level of train traffic that would occur with the Rail Spur Project, there would be an increased risk of accidents at these road crossings. However, given that the trains on site would only be moving at speeds of around three miles per hour these impacts would be considered less than significant."[197]
>
> In regards to security, "the Applicant indicates that the site has a comprehensive security system designed to address all security issues. The security system is periodically tested to confirm its effectiveness. It must meet or exceed Industry standards while addressing Homeland Security issues."[198]
>
> In regards to a discussion on injury and fatality rates: "as rail traffic would occur regardless of whether additional crude oil cars were added to the train, the transportation of crude oil would not increase the accident/trauma-related injuries and fatalities associated with rail accidents.[199]
>
> "Given the properties of crude oil, the likelihood of an explosion is virtually non-existent and consequently explosion scenarios are not addressed further in this document."[200]

CBE-29

It is remarkable that the DEIR does not even address first response or other emergency precautions. This is particularly the case given the potential inability, as recent news has informed, of first responders to control fires from rail spills or explosions.

History of Violations

Given that this Project would implement operations to allow Phillips 66 to transport highly volatile materials up and down the West Coast through highly populated areas, Phillips 66's regulatory compliance record is highly relevant. In 2004, a leaking crude oil pipeline "caused a release" at the Santa Maria facility.[201] The DEIR, especially in the context of switching to a different quality crude slate, should have provided more information regarding

---

[195] DEIR at 4.7-63.
[196] *See Berkeley Keep Jets Over the Bay Com. v. Board of Port Cmrs*. (2001) 91 Cal. App. 4th 1344, 1371 (striking down an EIR "for failing to support its many conclusory statements by scientific or objective data"); *San Joaquin Raptor Rescue Center v. County of Merced* (2007) 149 Cal. App. 4th 645, 659 ("[D]ecision makers and general public should not be forced to . . . ferret out the fundamental baseline assumptions that are being used for purposes of the environmental analysis.").
[197] DEIR at 4.7-57.
[198] DEIR at 4.7-7.
[199] DEIR at 4.7-28.
[200] DEIR at 4.7-37.
[201] DEIR at 4.7-37.

whether this incident was similar to the failed pipe in the crude unit that caused the Chevron Richmond Refinery August 6 2012 fire.

According to the U.S. Environmental Protection Agency ("EPA") the Refinery ranked as the 8th most toxic polluter of all California facilities with large chemical releases. Phillips 66 was ranked 12th on the Toxic 100 Air Polluters index.[202] This index, prepared by the Political Economy Research Institute, identifies the top U.S. air polluters among the world's largest corporations and ranks corporations based on the chronic human health risk from all of their U.S. polluting facilities.[203] CBE-29

The DEIR should have provided this additional information to properly evaluate the Project. Overall, its conclusory analysis and incompatible threshold of significance violate CEQA. The DEIR failed to properly assess, or even identify, the Project's significant, perhaps even catastrophic, risks to public safety, omitting any consideration of proper and critical mitigation.[204]

D. The DEIR Fails to Adequately Analyze the Project's Impacts Related Biological Resources.

The DEIR fails to sufficiently analyze significant environmental effects on biological resources in and around the site of the Project. Specifically, the DEIR should be revised to ensure that the on-site federally-endangered Nipomo Mesa Lupine and off-site prime agricultural farmland are adequately protected. CBE-30

(i) The DEIR does Not Adequately Analyze the Project's Impact on Endangered Species.

CEQA mandates a finding of significance for any impact that "restrict[s] the range of an endangered, rare or threatened species."[205] The Supreme Court applied this requirement, making clear that any impacts to federally designated critical habitat are per se significant.[206] The reasoning is manifest: the federal agency charged with the protection of a listed species has the requisite expertise to determine the habitat areas that, if impacted, would "restrict the range" of the listed species, and that determination must be respected by state and local agencies under CEQA.[207] CBE-31

---

[202] *See* EPA 2011 Toxics Release Inventory and the Political Economy Research Institute Toxic 100 Air Polluters, available at http://www.peri.umass.edu/toxicair_current/ (last accessed, Jan 20, 2014).
[203] The index relies on the U.S. EPA's Risk Screening Environmental Indicators ("RSEI"), which assesses the chronic human health risk from industrial toxic releases. The underlying data for RSEI is the EPA's Toxics Release Inventory ("TRI"), in which facilities across the U.S. report their releases of toxic chemicals. In addition to the amount of toxic chemicals released, RSEI also includes the degree of toxicity and population exposure.
[204] Cf: DEIR at 4.7-58.
[205] CEQA Guidelines § 15065(a)(1).
[206] *Vineyard Area Citizens for Responsible Growth, Inc., v. City of Rancho Cordova,* 40 Cal. 4th 412, 425, 449 (2007) (EIR invalidated for failure to consider significant any reduction in water flow in designated critical habitat area for the Central Valley steelhead trout).
[207] CEQA Guidelines § 15065(a)(1); see also 16 U.S.C. § 1532(5)(A)(i) (defining critical habitat as the areas "on which are found those physical or biological features essential to the conservation of the species").

Federally-and State-Endangered Nipomo Mesa Lupine

The Initial Study and DEIR identifies the Nipomo Mesa Lupine, a state and federally listed endangered plant species, as a biological resource that will be impacted through the construction and operational phases of the project. The document further identifies additional significant impacts to other ground-dwelling and animal species, including mortality impact on the American Badger, which is a fully protected species under California law, and impacts on dune shrub and dune habitats. However, the DEIR fails to mitigate the significant impacts posed to those, and other biological resources by this Project. In particular, without disclosing a switch to a different crude feedstock, the DEIR never analyzes the issues of impact or how to avoid, minimize or protect endangered species from that new feedstock and its plethora of different chemical compositions.

The Santa Maria Refinery property is home to the last remaining population of the federally-endangered Nipomo Mesa lupine.[208] Based on the botanical surveys for the DEIR, "[t]he current determination of presence/absence of Nipomo lupine within the Project Site cannot be adequately determined."[209] Though no blooming specimens were identified during the surveys, Figure 4.4-2 Sensitive Species Survey Map[210] shows two locations in the northern part of the Biological Survey Area (BSA), which according to the legend were mapped by CNPS in 2006. As represented by Figure 4.4-2, the Nipomo Mesa lupine, like many annual plants, moves around on the landscape to take advantage of preferred ecological conditions, and under drought conditions the Nipomo Mesa lupine can persist as an underground seed bank without producing above-ground individuals.[211] Consequently, despite the botanical survey's inability to detect the species, this Project will certainly directly impact previously occupied habitat, will likely indirectly impact extant habitat and populations and may impact and possibly eradicate the last remaining population of this highly endangered lupine on the planet. CBE-31

To mitigate for the possibility of this impact, the DEIR proposes mitigation measure BIO-1: before project activities are undertaken, a focused survey shall be conducted during a normal rainfall season to determine whether the Nipomo Mesa lupine is present within the project site.[212] If the survey determines that the lupine is present, Phillips 66 will apply for an Incidental Take Permit with the California Department of Fish and Wildlife.[213]

The DEIR claims that, with mitigation measure BIO-5a, which involves the development of a Dune Scrub Habit Restoration Plan, the impacts on the Nipomo Mesa lupine would be less than significant.[214] However, the Dune Scrub Habitat Restoration Plan does not purport to preserve existing populations of Nipomo Mesa lupine, but instead to "restor[e] and enhanc[e] central dune scrub habitat *immediately adjacent to* known Nipomo Mesa lupine populations."[215]

---

[208] USFWS letter, attached to Initial Study, Appendix C.
[209] DEIR at 4.4-17.
[210] DEIR at 4.4-16
[211] FWS letter; DEIR at 4.4-17.
[212] DEIR at 4.4-17.
[213] DEIR at 4.4-17.
[214] DEIR 4.4-17.
[215] DEIR at 4.4-22 (emphasis added).

Therefore the proposed mitigation is inadequate to fully mitigate direct and indirect impacts to the Nipomo Mesa lupine.

Additionally, if the pre-project survey does not find that the lupine is present, no mitigation is proposed to be implemented. However, the seeds of the Nipomo Mesa lupine often require scouring in order for germination to occur, so there is a possibility that even with a normal rainfall season, the seeds may not germinate and produce above-ground individuals unless the seeds are scoured.[216] Another survey that simply searches for blooming specimens may not prove sufficient to detect this endangered plant's populations. In any event, any of these mitigation measures, analyses or even consultation with the Fish and Wildlife Service performed *after* certification of this deficient DEIR constitutes *illegally deferred mitigation*.[217] CBE-31

The DEIR should be revised to provide for the protection of this federally and state-endangered species. Further, any revisions must address the direct and indirect impacts to this species from proximity to the storage and partial refining of tar sands crude – prior to project approval. The DEIR should also be revised to consider an alternative location for construction activities in order to avoid disturbing any Nipomo Mesa lupine populations and habitat identified in future surveys.

(ii) The DEIR does Not Adequately Analyze the Project's Impacts Related to Rare Plants and Plant Communities.

The DEIR appears to downplay the status of the Silver Dune Lupine – Mock Heather Scrub Alliance which is present on the proposed project.[218] It is actually a plant alliance that is considered highly imperiled and is tracked by the California Department of Fish and Wildlife.[219]

Although the DEIR addresses the Global (G3) and State Rank (S3), it fails to describe the significance of these ranks. Global G3 rank indicates that the alliance is "moderate risk of extinction or elimination due to a restricted range, relatively few populations or occurrences, recent and widespread declines, or other factors" globally and the S3 rank indicates that it is "Vulnerable in the jurisdiction due to a restricted range, relatively few populations or occurrences, recent and widespread declines, or other factors making it vulnerable to extirpation."[220] In the case of the S3 rank, the jurisdiction is the State of California. The DEIR fails to identify the number of acres of any of the plant alliances that occur on site, including the highly imperiled Silver Dune Lupine-Mock Heather Scrub Alliance. Therefore it is impossible to evaluate the direct or indirect impacts to this rare alliance or any of the alliances from the proposed project. CBE-32

(iii) The DEIR does Not Adequately Analyze the Project's Impacts Related to Wildlife.

---

[216] See USFWS letter.
[217] *Communities for a Better Environment* v. *City of Richmond*, 184 Cal. App. 4th at 93.
[218] DEIR at 4.4-3
[219] *See* https://nrm.dfg.ca.gov/FileHandler.ashx?DocumentID=24716&inline=1 at PDF page 50
[220] http://www.natureserve.org/publications/ConsStatusAssess_RankMethodology.pdf

The DEIR documents that American badgers occur on the proposed project site[221]. The DEIR recognizes that they are a Species of Special Concern, but it fails to recognize that they are also a fully protected species as a furbearing mammal under California Code of Regulations Title 14 Section 460. By simply excluding badgers from their dens, as proposed in Bio-4, does not answer the question if that exclusion results in "take" of the badger or not. Additional monitoring of the displaced badger(s) is(are) required.

In addition, the DEIR documents that burrowing owls occur on the proposed project site.[222] The DEIR recognizes that burrowing owls are Species of Special Concern, but it fails to identify any avoidance or mitigation strategy for the owls. Burrowing owls are in decline throughout California, and as the DEIR recognizes has not reproduced successfully in the central coast in the last 20 years. However, that does not eliminate the need to provide mitigation habitat for the owls that will be impacted by the proposed project. The DEIR needs to comply with the California Department of Fish and Wildlife's recent guidance on burrowing owl,[223] which requires projects to: CBE-33

> "Mitigate for permanent impacts to nesting, occupied and satellite burrows and burrowing owl habitat with
>
> (a) permanent conservation of similar vegetation communities (grassland, scrublands, desert, urban, and agriculture) to provide for burrowing owl nesting, foraging, wintering, and dispersal (i.e., during breeding and non-breeding seasons) comparable to or better than that of the impact area, and
> (b) sufficiently large acreage, and presence of fossorial mammals." (at 12).

Other requirements for mitigation are also included in the California Department of Fish and Wildlife's guidance, requirements omitted from the DEIR's analysis.

(iv) The DEIR does Not Adequately Analyze the Project's Impacts Related to Agricultural Activities.

The DEIR fails to include a comprehensive analysis of agricultural site constraints. Without a full investigation, the DEIR has no basis to conclude that the proposed construction of Project components in an agricultural area would not result in impacts. Site constraints, such as the presence of livestock, and the potential impact of diesel exhaust on pasture and cattle, must be identified prior to Project approval. An EIR must include objective measurements of a cumulative impact when such data are available (or can be produced by further study) and are necessary to ensure disclosure of the impact.[224] CBE-34

San Luis Obispo County is one of the leading agricultural production counties in California.[225] The site of the Proposed Project borders prime farmlands on its southern border,[226]

---

[221] DEIR at 4.4-20
[222] DEIR at 4.4-29
[223] http://www.dfg.ca.gov/wildlife/nongame/docs/BUOWStaffReport.pdf
[224] *See Kings County Farm Bureau*, 221 Cal. App. 3d at 729.
[225] DEIR at 4.2-1.

and a portion of the project site currently supports grazing activities.[227] Despite this, the DEIR asserts that the construction of a rail spur and the travel of up to 250 unit trains, each with 73 to 80 tank cars each year would have no significant and unavoidable impacts to agricultural resources.

The DEIR acknowledges that construction and operations activities could result in significant impacts on the productivity of adjacent farmlands—dust and contaminated air emissions, hazardous materials spills, and increased water use, among other impacts, could adversely affect agricultural lands adjacent to the project site by contaminated soil and water and putting strain on already limited water resources.[228] Further, the DEIR, by cross-referencing to other mitigation measures, including oil spill control and fugitive dust monitoring, asserts that the impacts on adjacent agricultural lands could be mitigated to less than significant.[229] This conclusory assessment is insufficient. Agricultural impacts are considered significant if they impair the agricultural use of other property.[230] The DEIR's "bundled" mitigation measures do not provide substantial evidence that the Project will not significantly impact adjacent agricultural properties. CBE-34

E. The Project is Inconsistent with State and Local Plans.

An EIR shall discuss any inconsistencies between the proposed project and applicable general plans, specific plans and regional plans.[231] Such regional plans include, but are not limited to, the applicable air quality attainment or maintenance plan or State Implementation Plan, area-wide waste treatment and water quality control plans, regional transportation plans, regional housing allocation plans, regional blueprint plans, plans for the reduction of greenhouse gas emissions, habitat conservation plans, natural community conservation plans and regional land use plans for the protection of the coastal zone.[232] An applicable plan, policy, or regulation is one that has already been adopted and thus legally applies to a project.[233] This necessarily includes County General Plans, such as the SLO County General Plan, adopted by the County in 2010, and other applicable State and Federal regulations, executive orders and policies. CBE-35

The DEIR fails to discuss any potential inconsistency with applicable plans, polices, and regulations including (1) the San Luis Obispo County General Plan, (2) Contra Costa County's Industrial Safety Ordinance, and General Plan, (3) the United States Chemical Safety Board, OSHA regulations and other federal guidance regarding risk analysis and hazards prevention, and (4) the California Global Warming Solutions Act (AB 32).

The San Luis Obispo County General Plan sets forth goals to improve the environment, based on public, community-based input from County Residents. The Plan sets forth goals

---

[226] DEIR at 4.2-15, Figure 4.2-3.
[227] DEIR at 4.2-2.
[228] DEIR at 4.2-22.
[229] DEIR at 4.2-22.
[230] DEIR at 4.2-19.
[231] CEQA Guidelines § 15125(d).
[232] *See, San Franciscans Upholding the Downtown Plan v. City & Cnty. of San Francisco* (2002) 102 Cal.App.4th 656, 678.
[233] *Chaparral Greens v. City of Chula Vista* (1996) 50 CA4th 1134, 1145, n7.

relating to the community's expressed needs to see a decrease in air pollution, decrease in traffic and traffic related noise, and decreased industrial development.[234] The Project, however, will increase all of those issues, wholly conflicting with the General Plan's over-arching environmental goals.

Additionally, because this Project is integrally related to the Propane Fuel Recovery Project at the Refinery's Rodeo facility, and because the two facilities are connected by pipeline, what takes place at the Santa Maria facility, impacts the Rodeo facility, triggering Rodeo, and Contra Costa County Local Plans and Ordinances. By increasing regional and state processing of, and reliance on fossil fuels, the Project conflicts with Contra Costa County's General Plan, to the extent that plan sets goals to increase the usage of renewable energy such as wind and solar.[235] Phillips 66's switch to denser, higher sulfur crude, as well as its storage, transport and the process for recovery of propane and butane at the Rodeo facility, as a result of this Project conflicts with the Contra Costa County Industrial Safety Ordinance that requires Inherently Safer Systems. The pending project proposals at both facilities are also inconsistent with the recommendations of the Chemical Safety Board ("CSB").

In particular, the CSB found a catastrophic and hazardous failure from running higher sulfur crude in existing refineries built before 1985.[236] The CSB identified that corrosion at the Chevron Richmond Refinery, which led to the pipe rupture, was in large part caused by sulfur compounds in the crude processed at the Richmond refinery.[237] It also found that such sulfur corrosion is not a new phenomenon, and that the petroleum industry is well aware of its potential to cause serious impacts on refinery equipment.[238] The DEIR fails to recognize the CSB's analysis and fails to address any proposed recommendations made by the CSB. Thus, it is unclear whether there would be a potential conflict between what the Project entails and what the CSB has set forth as its recommendations for refinery safety. What appears clear, is that the types of crude that the Refinery will be importing by rail will dramatically increase the overall sulfur content in the Refinery's crude slate, and would thus likely cause similar issues to those experienced at the Chevron Refinery, which lead to the Chevron Refinery fire, in August, 2012.[239] CBE-35

Moreover, because there will be an increase in the presence of harmful chemicals, raising serious safety and hazards concerns, the Project has the potential to conflict with the Occupational Health and Safety Act (OSHA) employee protection standards, as well as the President's August, 2013 Executive Order (EO) to improve chemical safety and security. CBE-36

---

[234] SLO County General Plan, Adopted: August 1994, Revised: June, 2010, Chapter 1, Land Use, available at: http://www.slocity.org/communitydevelopment/download/unifiedgeneralplan/Chapter1-Land%20Use%20June2010.pdf.

[235] *See generally*, Contra Costa County General Plan, 2005-2020, Adopted January 18, 2005, Reprinted July, 2010, available at: http://contra.napanet.net/depart/cd/current/advance/GeneralPlan/General%20Plan.pdf.

[236] *See*, Chemical Safety Board, Chevron Richmond Refinery Interim Investigation Report, April 2013, available at: http://www.csb.gov/assets/1/19/Chevron_Interim_Report_Final_2013-04-17.pdf, last accessed, Jan. 26, 2014.

[237] *Id*.

[238] *Id*., at 15.

[239] *See*, Chemical Safety Board, Chevron Richmond Refinery Interim Investigation Report, April 2013, *supra*.

The DEIR does little more than simply mention OSHA, and provides cursory statements in section 4.3, relating to Air Quality Impacts, and elsewhere, that diminish the relevance of the Act. For example, without stating a current or anticipated, foreseeable increase in the presence of hydrogen sulfide, the DEIR states that the hydrogen sulfide levels within the crude slate are "not expected to produce substantial impacts beyond possible OSHA related worker exposure issues…"[240] The DEIR even claims that such issues are outside the scope of the EIR.[241] In section 4.7, in the context of Hazards assessment, the DEIR states only that the Project's security vulnerability assessments must comply with OSHA Process Safety Management and EPA rules relating to risk management. The DEIR fails to acknowledge, however, that such issues must be raised, and included in a potential conflicts analysis, as the components and implications of the Project may conflict with such rules, given the potential hazards and dangerous impacts the Project may have on workers.

CBE-36

The President's August, 2013 EO, was signed and executed for the purpose of creating a comprehensive plan to address increasing chemical safety concerns throughout various industrial facilities, including refineries.[242] To that end, the President ordered a federal working group that includes, *inter alia*, OSHA and the EPA, to begin the process of improving operational coordination with State and Local partners, as well as owners and operators of industrial facilities increasing their use of hazardous chemicals. By simply dismissing, or failing to adequately analyze the increase in safety and hazards impacts that will result from the Project, the DEIR fails to demonstrate compliance with new federal initiatives such as the EO and forthcoming recommendations which will result from CSB's investigations. The DEIR, therefore, fails to sufficiently address potential conflicts with existing laws, rules, or regulations, in violation of CEQA.[243]

Finally, although the DEIR mentions the Global Warming Solutions Act of 2006 (AB 32) in its list of applicable regulations in the documents "Regulatory Setting" section, the DEIR's analysis fails to fully recognize that "[g]lobal warming poses a serious threat to the economic well-being, public health, natural resources, and the environment of California." The DEIR further fails to actually identify, much less analyze the project's true GHG emission levels, in the context of the current state-wide 2020 greenhouse gas emissions reduction goals, which are, pursuant to AB 32, signed into law. The DEIR's omission of an adequate GHG analysis, stands in stark contrast to statements made by Phillips 66 officials themselves, relating to the possible conflict between the law and their strategy for their two California refiners. Asked what he thought the permitting track is for delivering Bakken crude or Canadian heavy crude to California by rail, CEO Garland replied, "I think we are pushing it. I think there is some resistance, given the heavy nature of the crudes and the carbon footprint of the crudes and AB 32

CBE-37

[240] DEIR, 4.3-52.
[241] *Id*.
[242] *See* Executive Order Improving Chemical Safety and Security, August 1, 2013, available at: http://www.whitehouse.gov/the-press-office/2013/08/01/executive-order-improving-chemical-facility-safety-and-security.
[243] *See generally*, Guidelines § 15125(d); *see also*, *Chaparral Greens v. City of Chula Vista* (1996) 50 CA4th 1134, 1145.

cap and trade, et cetera, et cetara [sic] in California."[244]

The DEIR fails to address the above examples of the Project's conflicts with local, State and Federal plans. Overall, the DEIR's description of the Project and its environmental setting is inaccurate and inadequate to the extent that it improperly minimizes the environmental effects discussed further throughout this comment. CBE-37

III. THE EIR FAILS TO ADEQUATELY ANALYZE THE PROJECT'S CUMULATIVE ENVIRONMENTAL IMPACTS FROM OTHER REFINING-RELATED PROJECTS.

An EIR must discuss a Project's significant cumulative impacts.[245] A legally adequate cumulative impacts analysis views a particular project over time and in conjunction with other related past, present, and reasonably foreseeable future projects whose impacts might compound or interrelate with those of the project at hand. "Cumulative impacts can result from individually minor but collectively significant projects taking place over a period of time."[246]

A project has a significant cumulative effect if it has an impact that is individually limited but "cumulatively considerable."[247] "Cumulatively considerable" is defined as meaning that "the incremental effects of an individual project are significant when viewed in connection with the effects of past projects, the effects of other current projects, and the effects of probable future projects."[248] Cumulative impacts analysis is necessary because "environmental damage often occurs incrementally from a variety of small sources [that] appear insignificant when considered individually, but assume threatening dimensions when considered collectively with other sources with which they interact."[249] The DEIR fails to meet this requirement; for the following reasons, its analysis of cumulative impacts is incomplete, cursory and superficial. CBE-38

Initially, the DEIR's analysis does not comply with CEQA's requirement that agencies first determine whether cumulative impacts to a resource are significant, and then to determine whether a project's impacts are cumulatively considerable (*i.e.,* significant when considered in conjunction with other past, present and reasonably foreseeable projects).[250] The DEIR skips the first step and focuses only on the second.[251] This error caused the document to underestimate the significance of the Project's cumulative impacts because it focused on the significance of the Project's impacts on their own as opposed to considering them in the context of the cumulative problem. It is wholly inappropriate to end a cumulative analysis on account of a determination that a project's individual contribution would be less than significant. Rather, this should constitute the beginning of the analysis.

---

[244] *Transcript of Jan. 30, 2013 Phillips 66 Fourth-Quarter Earnings Conference Call*, available at: http://www.phillips66.com/EN/investor/presentations_ccalls/Documents/PSX-Transcript-2013-01-30T.pdf, last accessed Jan. 26, 2014, 2013.
[245] CEQA Guidelines section 15130(a).
[246] CEQA Guidelines section 15355(b).
[247] *Id*. §§ 15065(a)(3), 15130(a).
[248] *Id*. § 15065(a)(3).
[249] *Communities for a Better Env't v. Cal. Res. Agency* (2002) 103 Cal.App.4th 98, 114.
[250] CEQA Guidelines § 15064(h)(1).
[251] *See eg*. DEIR at 4.7-61.

Second, the DEIR's scope is limited largely to direct, immediate impacts within the immediate Project vicinity. For example, the analysis of cumulative hazards of transporting crude by rail, the analysis of impacts is limited to the County, despite the fact that Project-related rail traffic would pose the same risks throughout its California wide route. CBE-38

Third, the list of reasonably foreseeable future projects considered in the EIR is under inclusive, especially in light of the potential geographic scope of certain potentially significant impacts. One of the EIR's most egregious deficiencies is the document's failure to disclose that several California refiners are considering developing "Crude By Rail" projects that could bring in tar sands-based dilbit or Bakken crudes to each of the Bay Area refineries.[252] Each of the Bay Area's refineries have either recently permitted projects or have pending permits that will facilitate transporting and refining tar sands crude. These refinery projects, including at least three projects proposed by Phillips 66 (Santa Maria Facility Throughput Extension Project, this Project, and the Ferndale Washington Crude Unloading Facility Project), as well as several others including the Valero Crude by Rail Project, the Tesoro Project, and the WesPac Pittsburg Energy Infrastructure Project could result in the delivery of tar sands diluted with other chemicals to the Bay Area.

The California Attorney General has even expressed concern, and recently wrote the attached letter to the City of Pittsburg[253], inquiring about the link of the WesPac project to other refineries in the Bay Area. This County should also ask the same relevant questions.

Although the DEIR mentions these Santa Maria projects, and purports to analyze the cumulative environmental impacts from the projects it identifies (it uses the wrong baseline, the permit levels), it does not come close to disclosing the full list of projects with staggering environmental impacts on the Bay Area.[254] CBE-39

Three other projects omitted from consideration in the DEIR's analysis of cumulative environmental impacts include[255]:

(i) **Phillips 66 Ferndale, Washington Crude Unloading Facility Project**

Phillips 66 was recently issued a permit to construct a new crude rail unloading facility at its Ferndale Refinery in Washington. The DEIR must state whether this Project anticipates, depends on, or is in any other way related to the Washington project.

(ii) **Phillips 66 Rodeo Propane Fuel Recovery Project**

In particular, despite the clear relationship between the Santa Maria projects and the Rodeo Refinery project described above, the DEIR fails to evaluate the Project's cumulative

[252] *See* Karras and Fox Rodeo Reports.
[253] See Letter from Attorney General, Kamala D. Harris, to City of Pittsburg, *Recirculated Environmental Impact Report for the WesPac Energy Infrastructure Project*, dated January 15, 2014, attached as Exhibit 25.
[254] *See* DEIR Table 3.1.
[255] This list does not include the nearby oilfield expansion project proposed by Freeport McMoran, which is under construction and discussed in the Fox Santa Maria Report.

impacts of Santa Maria semi-refined products in, and in transport to, Rodeo. These include a cumulatively considerable increase in criteria and toxic air contaminant air emissions and greenhouse gas emissions. This includes cumulative environmental impacts of refining increased volumes of tar sands crude.

(iii) WesPac Pittsburg Energy Infrastructure Project

WesPac Energy–Pittsburg LLC (WesPac) proposes to modernize and reactivate the existing oil storage and transfer facilities located at the NRG Energy, Inc.(NRG, formerly GenOn Delta, LLC) Pittsburg Generating Station. The proposed WesPac Energy– Pittsburg Terminal (Terminal) would be designed to receive crude oil and partially refined crude oil from trains, marine vessels, and pipelines, store oil in existing or new storage tanks, and then transfer oil to nearby refineries, including the Phillips 66 San Francisco Refinery's Rodeo facility.[256]

The Terminal Project consists of the modernization and reactivation of the following components at the NRG facility: (1) marine terminal; (2) onshore storage terminal, including both East and South Tank Farms; and (3) the existing San Pablo Bay Pipeline. In addition, the project consists of the construction and operation of new facilities, including: (1) Rail Transload Facility; (2) Rail Pipeline; (3) KLM Pipeline connection; and (4) new ancillary facilities, including an office and control building, warehouse, electrical substation, and others as described below.[257]

CBE-39

For the delivery of crude oil and partially refined crude oil by train, a new Rail Transload Operations Facility would be constructed on a 9.8-acre vacant rail yard, to be leased from BNSF Railway Company. All products handled at the facility would be transported by rail, ship, barge, or pipeline; no products would be transported by truck as part of the proposed project.[258] The Terminal would operate with an average throughput of 242,000 barrels (BBLs)1 of crude oil or partially refined crude oil per day, and would have a maximum capacity throughput of 375,000 BBLs per day.[259] The total annual throughput for the entire Terminal would be approximately 88,300,000 BBLs of crude oil and/or partially refined crude oil per year.[260]

As mentioned above, the Phillips San Francisco Refinery is one of the refineries that may receive crude oil and/or deliver-crude oil to the Terminal.[261] Therefore, the DEIR should have included an analysis of this WesPac project in the cumulative impact analysis, both because the physical construction and operation of this facility will contribute to cumulative environmental impacts and because it could facilitate greater amounts of crude delivery to and from the Santa Maria facility. The DEIR must be revised to take into account each of the cumulative projects that has the potential to result in cumulatively considerable environmental impacts. Furthermore, the DEIR must identify feasible mitigation measures capable of reducing these environmental impacts.

---

[256] WesPac RDEIR at 2.0-1.
[257] *Id*. at 2.0-4.
[258] *Id*. at 2.0-1.
[259] *Id*. at 2.0-2.
[260] *Id*.
[261] *Id*.

Climate Change Implications

Furthermore, it is important to acknowledge that climate change is the classic example of a cumulative effects problem; emissions from numerous sources combine to create the most pressing environmental and societal problem of our time.[262] As one appellate court recently held, "the greater the existing environmental problems are, the lower the threshold for treating a project's contribution to cumulative impacts as significant."[263]

Canadian tar sands crude is considered to be the dirtiest, most carbon-intensive fuels on the planet. NASA climatologist Jim Hansen explains:

> With today's technology there are roughly 170 billion barrels of oil to be recovered in the tar sands, and an additional 1.63 trillion barrels of worth underground if every last bit of bitumen could be separated from sand. "The amount of CO2 locked up in Alberta tar sands is enormous," notes mechanical engineer John Abraham of the University of Saint Thomas in Minnesota, another signer of the Keystone protest letter from scientists. "If we burn all the tar sand oil, the temperature rise, just from burning that tar sand, will be half of what we've already seen"—an estimated additional nearly 0.4 degree Celsius from Alberta alone.

CBE-39

Notwithstanding the clear evidence documenting the effect that petroleum-refining has on GHG emissions, and enormous increase that would result from the transport, processing and refining of tar sands crudes. The DEIR should have acknowledged the switch to this different quality crude oil feedstock and provided a suitable cumulative impacts analysis.

IV. THE DEIR FAILS TO ANALYZE A REASONABLE RANGE OF PROJECT ALTERNATIVES

An EIR "must consider a reasonable range of potentially feasible alternatives" to a project.[264] An alternative is feasible if it is "capable of being accomplished in a successful manner within a reasonable period of time, taking into account economic, environmental, social, and technological factors."[265]

CBE-40

Although "CEQA establishes no categorical legal imperative as to the scope of alternatives to be analyzed in an EIR[,] [e]ach case must be evaluated on its facts."[266] The scope of alternatives is judged by the rule of reason.[267] Generally, the scope of alternatives is sufficient so long as the EIR provides "information sufficient to permit a reasonable choice of alternatives

---

[262] *Kings County Farm* ("Perhaps the best example [of a cumulative impact] is air pollution, where thousands of relatively small sources of pollution cause serious a serious environmental health problem.").
[263] *Communities for Better Env't v. Cal. Res. Agency* (2002) 103 Cal. App. 4th 98, 120.
[264] 14 Cal. Code Reg. § 15126.6(a).
[265] Cal. Pub. Res. Code § 21061.1.
[266] *Citizens of Goleta Valley v. Bd. of Supervisors* (1990) 52 Cal. 3d 553, 556 (*Goleta II*).
[267] 14 Cal. Code Reg. § 15126.6(a) ("There is no ironclad rule governing the nature or scope of the alternatives to be discussed other than the rule of reason.").

so far as environmental aspects are concerned."[268] In addition, the EIR must include "sufficient information about each alternative to allow meaningful evaluation, analysis, and comparison with the proposed project."[269] "The degree of specificity required in an EIR 'will correspond to the degree of specificity involved in the underlying activity which is described in the EIR.'"[270] Thus, an EIR for a specific project must necessarily be more detailed than an EIR for the approval of a general plan.[271]

The DEIR fails to identify a reasonable range of alternatives and to discuss the alternatives in sufficient detail to allow meaningful evaluation and analysis.[272] The DEIR analyzed only three alternatives: a no project alternative, a loop rail unloading configuration alternative, and a reduced rail deliveries alternative.[273] The DEIR also identified four alternatives that were considered, but rejected because they were either not technically feasible, failed to attain the basic objectives of the project, or would result in greater impacts than the proposed project. These rejected alternatives included two trucking alternatives, a marine transport alternative, and a rail unloading at the Santa Maria Pumping Station alternative.[274] CBE-40

(a) The DEIR Fails to Consider a Reasonable Range of Alternatives.

The DEIR, however, fails to consider even the most simple of alternatives, for example, an alternative rail route that avoids the populations with the highest density in Central and Northern California. Currently, the Rail Spur Project proposes a rail route that would bring trains of crude oil through heavily populated urban areas, exposing large numbers of people to the criteria air emissions associated with locomotive operation, and greatly increasing the human health and safety risks of potential accidents or spills. A spill in the Sacramento-San Joaquin Delta, for example, could jeopardize the water supply for much of the State. Instead of directing trains through Northern California, along the Sacramento River and through the City of Oakland, the DEIR should analyze an alternate rail route that would avoid bringing rails cars containing highly flammable and volatile crude or semi-refined gas oil through high population areas. CBE-41

The DEIR should also be revised to include an analysis of alternative modes of transporting crude oil from oilfields across North America. For example, the DEIR analyzed only one marine transport alternative, and did not analyze a pipeline alternative. Parties objecting to the EIR are not responsible for formulating alternatives for consideration—the lead agency bears this burden.[275] Objecting parties will rarely have access to the same information that the lead agency does, and thus will be limited in their ability to suggest sufficiently detailed and specific alternatives.[276] The DEIR failed to include these two, and other reasonable alternatives in its analysis.

---

[268] *Found. for San Francisco's Architectural Heritage v. San Francisco* (1980) 106 Cal. App. 3d. 893, 910.
[269] 14 Cal. Code Reg. § 15126.6(d).
[270] *Al Larson Boat Shop, Inc. v. Bd. of Harbor Commrs.* (2d Dist. 1993) 18 Cal. App. 4th 729, 746 (quoting 14 Cal. Code Reg. § 15146).
[271] *See Al Larson Boat Shop, Inc. v. Bd. of Harbor Commrs.* (2d Dist. 1993) 18 Cal. App. 4th 729, 746.
[272] *See* 14 Cal. Code Reg. § 15126.6(d).
[273] DEIR at 5-24.
[274] DEIR at 5-15 to 5-23, Tables 5.1 and 5.2.
[275] *See Laurel Heights I*, 47 Cal. 3d at 406.
[276] *See Laurel Heights I*, 47 Cal. 3d at 406.

(b) The DEIR Fails to Consider Alternatives that Would Lessen the Significant Impacts of the Project.

In addition to failing to assess a reasonable range of alternatives, the DEIR fails to analyze alternatives that would avoid or substantially lessen the significant impacts of the project.[277] Of the three alternatives analyzed, the DEIR identifies the no project alternative as the environmentally superior alternative.

However, when the no project alternative is the environmentally superior alternative, CEQA requires an EIR to identify the next environmentally superior alternative. The DEIR identifies the reduced rail deliveries alternative as the next environmentally superior alternative, but notes that certain environmental impacts of the reduced rail deliveries alternative depend heavily upon the question of whether the County would be preempted by federal law from regulating locomotive emissions outside of the Santa Maria Refinery site.[278] As discussed above, the argument that the County may be preempted from regulating air impacts outside of the project site is invalid. Consequently, according to the County itself, the reduced rail deliveries alternative would offer no advantage over the Proposed Project in terms of NO_x, ROG, and diesel particulate emissions, and only a minimal advantage in terms of hazard risks, noise, GHG emissions, and health risks.[279] Even assuming *arguendo* that preemption applies, the reduced rail deliveries alternative, while better than the proposed Project, still has significant impacts.

CBE-42

The DEIR's failure to consider even an alternative with more than minimal environmental advantages over the proposed project is contrary to the purpose of the CEQA alternatives requirement. An EIR must identify a range of reasonable alternatives "which would feasibly attain most of the basic objectives of the project *but would avoid or substantially lessen any of the significant effects of the project*."[280] None of the alternatives considered in the DEIR, including the reduced rail deliveries alternative, would avoid or substantially lessen the significant impacts of the Project; the range of alternatives considered in the DEIR is insufficient.

/
/
/
/
/
/

[277] See CEQA Guidelines, 14 Cal. Code Reg. § 15126(a).
[278] DEIR at 5-35 to 5-36.

[280] 14 Cal. Code Reg. § 15126.6(a) (emphasis added).

V. CONCLUSION

The DEIR remains woefully inadequate under CEQA. The County must substantially revise and recirculate the document in order to correct its numerous defects. We appreciate the opportunity to submit our initial comments on the DEIR and will submit further comments, if necessary, as soon as possible.

Sincerely,

/s/

Roger Lin
Greg Karras
Yana Garcia
Heather Lewis
On behalf of Communities for a Better Environment

Devorah Ancel
Staff Attorney
On behalf of the Sierra Club

Diane Bailey
Jackie Prange
On behalf of the Natural Resources Defense Council

Ileene Anderson
Staff Attorney
On behalf of the Center for Biological Diversity

Tia Lebherz
Northern California Organizer
On behalf of Food & Water Watch

Jason Flanders
Program Director
On behalf of San Francisco Baykeeper

David Monkawa
On behalf of California Nurses Association

Exhibits

1. Fox Santa Maria Report
2. Fox CV
3. Fox Rodeo Report
4. Karras Rodeo Report
5. Karras CV and publications list
6. Rodeo Appeal CBE Supp–A
7. Rodeo Appeal CBE Supp–C
8. Fox Comment on Phillips 66 1/6/14 letter regarding Rodeo project
9. U.S. Chemical Safety Board Interim Investigation Report, Chevron Richmond Crude Unit Fire (4/19/13)
10. CBE Testimony, Chemical Safety Board 4/19/13 Hearing
11. National Transportation Safety Board Recommendatinos R-14-1 through 3 (1/23/14
12. National Transportation Safety Board Recommendatinos R-14-4 through 6 (1/21/14)
13. Fox Valero Benicia Report (2013)
14. Goodman Group Valero Benicia Report (2013)
15. Phillips 66 Report to Barclays (2013)
16. Karras, 2010 (peer reviewed report in *Env. Sci. Technol.*)
17. Karras, 2011 (peer reviesed report published by Union of Concerned Scientists)
18. Abella and Bergerson, 2012 (peer reviewed report in *Env. Sci. Technol.*)
19. Brant, 2011 (peer reviewed report in *Env. Sci. Technol.*)
20. Bredeson et al., 2010 (peer reviewed report in *Int. J. Life Cycle Assess.*)
21. Worldwide Refining Survey; *Oil & Gas Journal*
22. EIA Ref. Cap. (U.S. Energy Information Administration; downloaded 2013)
23. NPDES Permit Order R3-2007-002
24. NPDES Permit Order R2-2011-0027

25. Comment of Attorney General Harris on WesPac Project (2014)

26. Chambers et al., 2008 (peer reviewed report in *J. Air & Waste Manage. Assoc.*)

Exhibit 1

Comments

on

Environmental Impact Report

for the

Phillips 66
Rail Spur Extension Project

Santa Maria, California

Prepared
for
Sierra Club
San Francisco, CA

January 27, 2014

Prepared by
Phyllis Fox, Ph.D., PE
Consulting Engineer
745 White Pine Ave.
Rockledge, FL 32955

I. INTRODUCTION

The Phillips 66 Santa Maria Refinery (SMR), located in San Louis Obispo County, is proposing to modify an existing rail spur to accommodate train delivery of crude oil, to replace local supplies. The proposed tracks and unloading facilities would be designed to accommodate unit trains of up to 80 tank cars and associated locomotives and other supporting cars as well as periodic manifest trains of fewer cars not dedicated to SMR oil. (Project). I was asked by the Sierra Club to review the Draft Environmental Impact Report (DEIR)[1] on this Project and prepare comments on the adequacy of the project description and the hazards and hazardous materials section.

My evaluation, presented below, indicates the DEIR's Project description is incomplete. First, it fails to disclose the baseline crude slate composition, which determines the CEQA baseline emissions from crude import through refining. Second, it fails to disclose the link between the Rail Spur Project and two other directly related projects: (1) the Propane Recovery Project at Phillips 66's Rodeo facility,[2] which is linked by pipeline to the Rodeo Refinery, and (2) the Throughput Increase Project at the Santa Maria Refinery[3]. The impacts of these directly related projects should be evaluated as a single project. Together, they result in many significant impacts that were not disclosed in the Rail Spur Project DEIR.

The DEIR fails to evaluate the impacts resulting from a significant switch in crude slate, the raison d'etre for the Project. The entire Project, including crude slate change, would result in significant unmitigated air quality, global warming, worker and public health, odor, risk of upset, public safety, visual, noise, and other impacts, either not disclosed or not mitigated in the DEIR. Finally, the DEIR fails to evaluate reasonable alternatives to the Project and to impose all feasible mitigation.

My resume is included in Attachment 1 to these comments. I have over 40 years of experience in the field of environmental engineering, including air emissions and air pollution control; greenhouse gas emission inventory and control; air quality management; water quality and water supply investigations; hazardous waste investigations; hazard investigations; risk of upset modeling; environmental permitting; nuisance investigations (odor, noise); environmental impact reports, including CEQA/NEPA documentation; risk assessments; and litigation support.

I have M.S. and Ph.D. degrees in environmental engineering from the University of California at Berkeley with minors in Hydrology and Mathematics. I am a licensed

---

[1] Marine Research Specialists (MRS), Phillips 66 Company Rail Spur Extension Project Public Draft Environmental Impact Report and Vertical Coastal Access Assessment, November 2013.

[2] Contra Costa County Department of Conservation and Development, Phillips 66 Propane Recovery Project, Final Environmental Impact Report, November 2013 (FEIR).

[3] Marine Research Specialists, Phillips 66 Santa Maria Refinery Throughput Increase Project, Final Environmental Impact Report, October 2012 (SMF FEIR), Available at: http://slocleanair.org/phillips66feir.

professional engineer (chemical, environmental) in five states, including California; a Board Certified Environmental Engineer, certified in Air Pollution Control by the American Academy of Environmental Engineers; and a Qualified Environmental Professional, certified by the Institute of Professional Environmental Practice.

I have prepared comments, responses to comments and sections of EIRs for both proponents and opponents of projects on air quality, water supply, water quality, hazardous waste, public health, risk assessment, worker health and safety, odor, risk of upset, noise, land use and other areas for well over 100 CEQA documents. This work includes Environmental Impact Reports (EIRs), Negative Declarations (NDs), and Mitigated Negative Declarations (MNDs) for all California refineries as well as various other permitting actions for tar sands and light shale crude refinery upgrades in Indiana, Louisiana, Michigan, Ohio, South Dakota, Utah, and Texas and liquefied natural gas (LNG) facilities in Texas, Louisiana, and New York. I was a consultant to a former owner of the subject Refinery on CEQA and other environmental issues for over a decade and am thus very familiar with both the Rodeo Refinery and the Santa Maria Refinery and their joint operations.

My work has been cited in two published CEQA opinions: (1) *Berkeley Keep Jets Over the Bay Committee, City of San Leandro, and City of Alameda et al. v. Board of Port Commissioners* (August 30, 2001) 111 Cal.Rptr.2d 598 and *Communities for a Better Environment v. South Coast Air Quality Management Dist. (2010) 48 Cal.4th 310*.

II. THE PROJECT IS PIECEMEALED

The DEIR only evaluated a portion of the Project. The Project as described in the DEIR is narrowly defined as a modification to an existing rail spur extension to allow crude to be delivered to the Santa Maria Refinery by train for processing. DEIR, p. 2-1. However, as explained below, the Rail Spur Project is actually only one of the components of a much larger project consisting of at least three parts: (1) Throughput Increase Project; (2) Rail Spur Project; and (3) Propane Recovery Project at Rodeo.

The Santa Maria Refinery currently receives all crude oil by pipeline from various mostly local sources, including the Outer Continental Shelf (60-85%), Price Canyon/Santa Maria Valley/San Joaquin Valley (5-20%), San Ardo (5-10%), and Canada (2-7%). DEIR, p. 2-27. Most all of these sources, particularly the major ones -- offshore platforms and local oil fields -- are in decline. DEIR, p. ES-18 (“However, if and when local crude oil production (the major source of oil for the SMR) declines, the Rail Spur Project...would allow the SMR to maintain operating up to its permitted throughput levels.”), p. 2-30 ("In addition, production from offshore Santa Barbara County [the major source of SMR's crude] has been in decline for a number of years... This declining production... generates the need for the Rail Spur Project.”), p. 6-3 (“California production of crude oil per year has been in decline since 1986...The decline has average about 1.7% per year since 1995. More recently, the decline has averaged over 3% annually since the year 2000... Delivery of other North American crudes to California could help to offset the need for foreign imports as local production declines.”) Thus, the

CBE-43

Throughput Project likely could not be implemented but for the Rail Spur Project, which allows crudes to be imported to replace declining local sources. CBE-43

A. Link With Crude Throughput Increase Project

Thus, Phillips 66 is arguing on the one hand that the Rail Spur Project is required to replace dwindling local crude supplies while on the other it has proposed to increase its throughput capacity, without disclosing the source of the new crude. Clearly, Phillips 66 anticipated the need to increase its crude supply, given the diminishing local supplies, when it was planning the Crude Throughput Increase Project in 2008,[4] at a time it faced dwindling local crude supplies at high costs. Thus, the need to import more cost-effective crudes from distant sources, accessible only by rail, must have been on the table at the time the Throughput Increase Project was developed.

The decline in local crude supplies is not news and has long been known.[5] In fact, given the admitted declining local sources of crude, it is not believable that the SMR could increase its throughput by 10%, when a 3% annual decline in its major source of oil is projected, without changing its source of crude. This is prima facie evidence that the Throughput Increase Project and the Rail Spur project are related and were likely planned together. Thus, one of the key purposes of the Rail Spur Project is to build the infrastructure to allow crude oil to be imported from distant sources to replace declining local crude oil sources and facilitate a 10% increase in crude throughput, separately permitted. CBE-44

The average baseline crude throughput for Santa Maria (2010-2012) is 38,029 barrels per day (BPD). DEIR Table 2.7. The Throughput Increase Project increased the permit level from 44,500 BPD (Throughput FEIR, p. ES-4) by 10% to a maximum of 48,950 BPD or by 4,450 BPD. Throughput FEIR, p. 1-1. Thus, the SMR was operating at 6,471 BPD below the CEQA baseline for the Rail Spur Project and 10,921 BPD below the projected future daily maximum throughput. It is unlikely that the permitted crude throughput of 48,950 BPD (DEIR, p. 2-28) could be supplied locally, given the decline in locally available crudes.

Thus, the Rail Spur Project is required to achieve the increase in throughput. The Rail Spur Project essentially opens up new markets for the Santa Maria Refinery, allowing it to replace declining local sources, supply the 10% permitted throughput increase, and compete with any increase in locally produced crudes. This ties the Rail Spur Project directly to the Throughput Increase Project. Thus, these two projects are different sides of the same coin and should have been evaluated as a single project.

The Rail Spur Project will allow an increase in crude processing of up to 10,921 BPD. The DEIR did not, but must, analyze all of the impacts of this increase in

[4] The DEIR was issued August 2011, Available at: http://www.slocleanair.org/COP3.php.

[5] California Energy Commission, Transportation Energy Forecasts and Analyses for the 2009 Integrated Energy Policy Report, May 2010.

crude throughput processing capacity, including the increase in emission of processing an additional 10,921 BPD of crude and the increase in emissions of a change in the crude slate itself. The DEIR analyzes none of the impacts associated with a 10,921 BPD increase in crude throughput or the change in crude slate. CBE-44

B. Link With Propane Recovery Project at Rodeo

Both of these Santa Maria projects are directly related to a third project at Phillips 66's San Francisco Refinery, located in Rodeo in the San Francisco Bay Area. The Rodeo Refinery and the Santa Maria Refinery are connected by a 200-mile pipeline, used to transport semirefined products from Santa Maria to Rodeo for finishing into market products. DEIR, p. 2-3. These two locations, although more than 200 miles apart, are considered one location.[6] The Phillips 66 website similarly describes these facilities thus: "The San Francisco Refinery is comprised of two facilities linked by a 200-mile pipeline. The Santa Maria facility is located in Arroyo Grande, Calif., while the Rodeo facility is in the San Francisco Bay Area."[7]

The two facilities operate in unison, the Santa Maria Refinery supplying feedstocks, naphtha and gas oil, to Rodeo via pipeline to be upgraded into finished petroleum products, such as gasoline and jet fuel. DEIR, p. 2-3. Thus, these two refineries are inextricably linked. Changes in operations at one of them manifest as changes in the other. A change in crude slate at Santa Maria, for example, will manifest as changes in emissions from refining the resulting semi-refined products at Rodeo. CBE-45

The Rodeo Refinery is proposing to recover an additional 4,200 barrels per day (BPD) of propane and 3,800 BPD of butane from the refinery fuel gas (RFG) (collectively known as "liquefied petroleum gas" or LPG) to export for sale (Project).[8] My review of the FEIR for that project indicates that the Rodeo Refinery as operated in the baseline would be unable to recover this amount of LPG without increases in the amount of propane- and butane-containing feed to the affected units. Fox Report[9], Comment II.

The partially refined products from the increase in crude throughput at Santa Maria will be sent to the Rodeo Refinery for further processing. As explained below, these partially refined products include significant amounts of propane and butane that will be recovered at Rodeo under the Propane Recovery Project to meet its design LPG recovery goal. Thus, cumulative impacts of these three projects -- crude throughput

---

[6] BAAQMD, Review of Current Air Monitoring Capabilities near Refineries in the San Francisco Bay Area, July 3, 2013; p. 1-5, Available at: http://www.baaqmd.gov/~/media/Files/Technical%20Services/DRI_Final_Report_061113.ashx.

[7] http://www.phillips66.com/EN/about/our-businesses/refining-marketing/refining/Pages/index.aspx.

[8] Contra Costa County Department of Conservation and Development, Phillips 66 Propane Recovery Project, Final Environmental Impact Report, November 2013 (FEIR).

[9] *See* Fox Rodeo Report, Comment II.

increase + rail spur to supply the increased crude + project to recover propane/butane from the increased throughput -- should have been evaluated as a single project.

The link between the Santa Maria Refinery semi-refined products (gas oil, naptha) and the Rodeo Propane Recovery Project is clearly shown in the Rodeo Refinery block flow diagrams from the Rodeo Propane Recovery DEIR. The block flow diagram for the existing Rodeo Refinery (Rodeo DEIR Figure 3-4) shows "SMGO" entering the Refinery at the U-240 Prefractionator unit (Prefrac unit). See Rodeo DEIR, p. 3-12 ("Heavy gas oil (HGO) streams from Unit 200 and HGO purchased from outside of the Refinery are fractionated in the Unit 240 prefractionator.") SMGO is Santa Maria Gas Oil. This Rodeo DEIR figure is reproduced here as Figure 1 for ease of reference. The U-240 Prefrac unit at Rodeo separates Santa Maria gas oil and other gas oils into lighter hydrocarbon fractions that are currently blended into the Rodeo Refinery Fuel Gas, shown in Rodeo DEIR Figure 3-5 (see lower left hand corner, blue arrow labeled U-240/244/248 S-RFG being routed to U-240 Fuel Gas Treating), but which will be further processed into propane and butane in new units added to the Rodeo Refinery as part of the Propane Recovery Project.

Figure 1
Overall Existing Rodeo Refinery
Block Flow Diagram

CBE-45

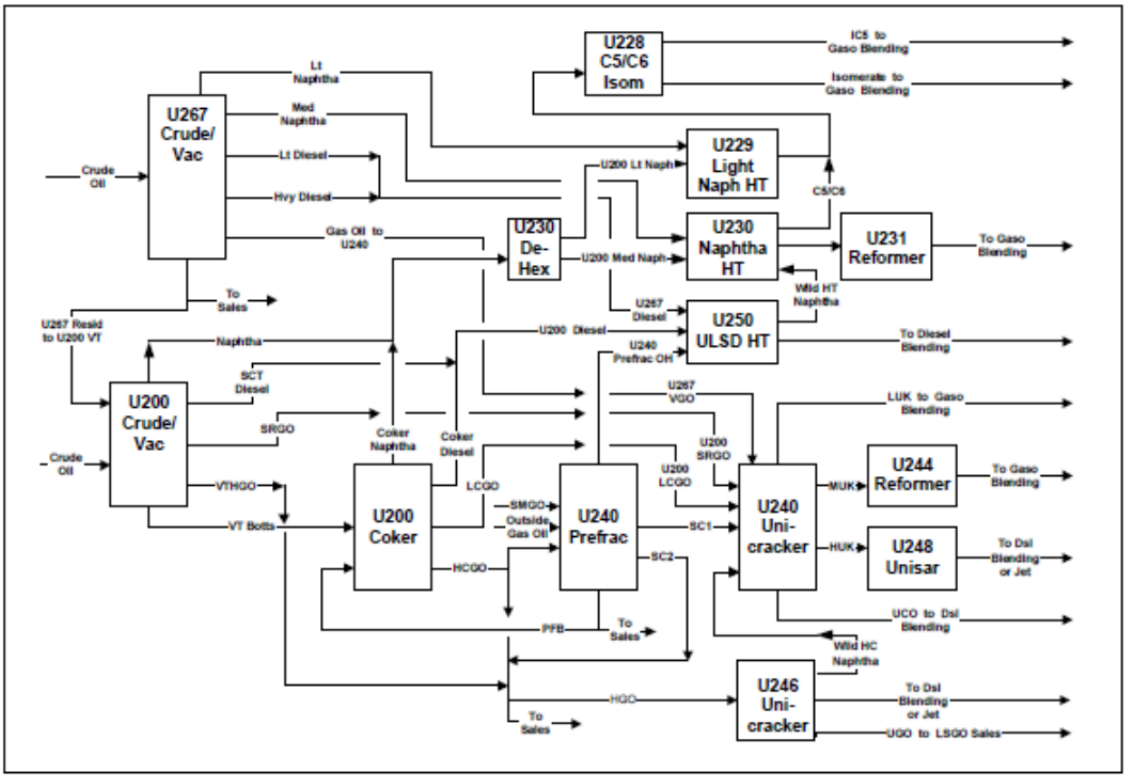

SOURCE: Phillips 66 Company

Phillips 66 Propane Recovery Project . 120546
Figure 3-4
Overall Block Flow Diagram of Refinery

Under the Propane Recovery Project at Rodeo, the output from the Prefrac unit is sent to the proposed "RFG Propane Recovery Unit" instead of the Refinery Fuel Gas system. This unit is the heart of the Propane Recovery Project. Rodeo DEIR, Table 3-2. Propane and butane are recovered in this unit. This new propane/butane extraction unit is shown in Propane Recovery Project DEIR in Figure 3-6, which is reproduced here as Figure 2 for ease of reference.

Figure 2
Proposed Rodeo Refinery
Fuel Gas System Block Flow Diagram

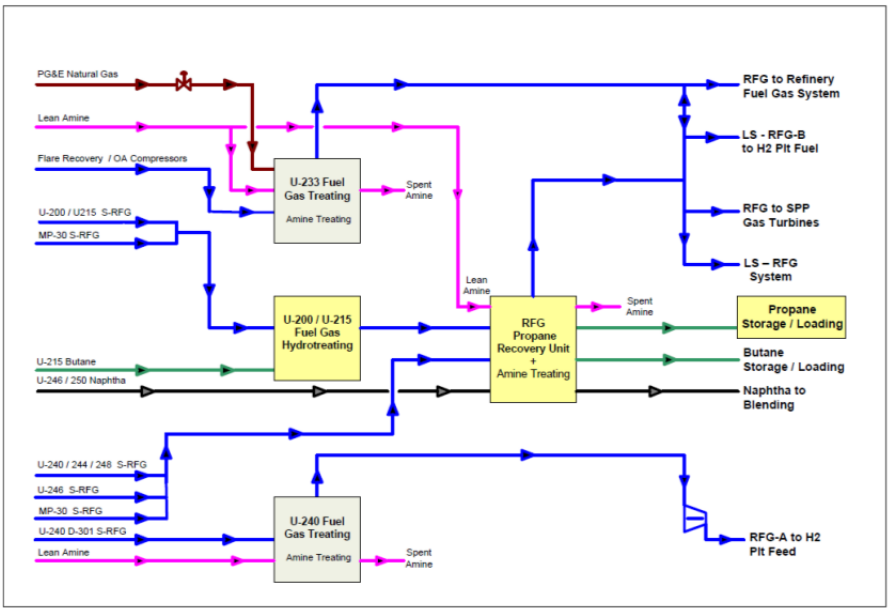

SOURCE: Phillips 66 Company

Phillips 66 Propane Recovery Project . 120546
Figure 3-6
Proposed Refinery Fuel Gas System Block Flow Diagram

CBE-45

The RFG Propane Recovery Unit is the big yellow box in the middle of Figure 2. Blue arrows in the lower left hand corner of Figure 2 identify the inputs to this unit, which are various refinery streams. These streams include "U-240/244/248 S-RFG." This designation means that Refinery Fuel Gas (RFG) from Unit U-240 is sent to the RFG Propane Recovery Unit. (This stream was formerly sent to the U-240 Fuel Gas Treating Unit. Rodeo DEIR, Fig. 3-6.) As Santa Maria Gas Oil (SMGO) is one of the inputs to Unit U-240, changes at the Santa Maria Refinery would be transmitted directly to the Propane Recovery Project via the U-240 Prefrac Unit at Rodeo.

This establishes a direct link between the Rodeo Propane Recovery Project and the two modifications at the Santa Maria Refinery -- the Throughput Increase Project and the Rail Spur Project to supply the increase in crude. This is the "nexus" to the larger project with the potential to change crude oil feedstocks.

The increase in throughput at the Santa Maria Refinery would increase the amount of SMGO and naphtha processed at Rodeo into propane and butane. As

discussed elsewhere in these comments, the new rail spur at the Santa Maria Refinery would enable tar sands and other crudes to be imported to and processed at Santa Maria. Tar sands crudes imported by rail are blended with a diluent that is rich in butane and propane. Other potential imports, including Bakken crudes, also are rich in propane and butane feedstocks required at Rodeo. Thus, both projects proposed for the Santa Maria Refinery will have a direct impact on the amount of propane and butane available for recovery at Rodeo, making up for the deficit in the propane and butane in Rodeo refinery fuel gas for LPG recovery.

Thus, there is both a direct pipeline link between the two facilities, an explicit statement that the Santa Maria Throughput Increase Project was developed to send more semi-refined product to the Rodeo Refinery, a pipeline linking the two facilities, and a direct process link between those products and the input to the Propane Recovery Project disclosed on the process flow diagrams. These factors establish a nexus between the Santa Maria Rail Spur and Throughput Increase Projects and the Propane Recovery Project at Rodeo. Thus, these projects are integrally related and should be evaluated as a single project under CEQA. CBE-45

III. THE PROJECT WOULD REPLACE THE EXISTING CRUDE SLATE WITH CHEMICALLY DISTINCT CRUDES

The DEIR strongly hints that the Project would import Bakken crudes, noting the Rail Spur Project would import crude oil "sourced from oilfields throughout North America based on market economics and other factors. The most likely sources would be the Bakken field in North Dakota or Canada." DEIR, p. ES-3. Elsewhere, the DEIR indicates: "These could include fields as far away as the Bakken field in North Dakota or Canada." DEIR, p. 2-21. See also: "The most likely sources of crude oil for the SMR would be North Dakota, Canadian, and Mid Continent area." DEIR, p. 4.12-21. This crude is chemically distinct from the existing crude slate. Further, as discussed below, the Rail Spur Project is also designed to import Canadian tar sands crudes. These tar sands crudes are also chemically distinct from the baseline crude slate. These differences in crude slate composition will result in significant impacts that were not disclosed in the DEIR. CBE-46

A. Bakken Crudes As Feedstock for the Santa Maria Refinery

The Project description suggests that Bakken crudes would be imported by rail. While we believe this is unlikely for the reasons outlined below, the DEIR must nevertheless, given its assertions, evaluate the impact of refining this crude, which is chemically distinct from the current crude slate and from tar sands. CBE-47

A refiner's choice of crude oil is influenced by the specific collection of processing units at the refinery and their design. Refinery configurations are unique and are typically designed to process a specific crude slate. The challenge for a refinery, then, is finding the cheapest crude that is compatible with the refinery's design.

The Santa Maria Refinery is designed to refine heavy, high sulfur crudes, such as those available locally with a general composition as summarized in Table 1, below. DEIR, p. 2-3.

Table 1
Properties of Crude Oil Currently Refined at Santa Maria (DEIR, Table 2.6).

Characteristic	Value
Gravity, API	19
Specific Gravity at 60 degrees Fahrenheit	0.9377
Hydrogen Sulfide Concentration	< 1 parts per million by weight
Sulfur content	4.6 % by weight
Light ends (propane thru Hexanes)	Approximately 6 %
Vapor Pressure (dry equivalent, DVPE)	6.95 pounds per square inch
Kinematic Viscosity at 104 degrees Fahrenheit	245 centistokes

The Santa Maria Refinery consists of atmospheric pressure distillation, vacuum distillation, delayed coking, and sulfur recovery, designed specifically to breakdown these local heavy high sulfur crudes into semirefined products. The semi-refined products -- gas oil and naphtha -- require additional refining at Rodeo to convert them into gasoline and other finished products. DEIR, Sec. 2.0. Thus, major changes in the crude slate at Santa Maria would necessarily result in major design changes at both the Santa Maria and Rodeo Refineries. More naphtha, especially lighter napthas, and less gas oil would be produced at Santa Maria, requiring accommodations in throughputs and process design at Rodeo, e.g., contributing to propane and butane that would be recovered at Rodeo with the Propane Recovery Project. The DEIR does not disclose any refinery design changes at either location. Thus, the DEIR is either deficient in this regard, i.e., for not disclosing design changes and their impacts, or Bakken crude is not a serious option.

CBE-47

All refineries have criteria for accepting crudes for processing. These were not disclosed in the DEIR and should have been as environmental impacts cannot be fully assessed without them. The switch from a heavy high sulfur crude (current) to very light low sulfur crude (Bakken) would require process design changes, such as changes to the distillation units, idling of the coker and sulfur recovery units, and new tankage. The DEIR does not disclose any refinery design changes.

Bakken crude[10] is a "light" (i.e., very volatile) crude with a high API gravity (>40°) and very low sulfur content (<0.2%)[11] that is not similar to the current crude

[10] Cenovus, Bakken Light Crude Oil, Available at: http://www.cenovus.com/contractor/docs/CenovusMSDS_BakkenOil.pdf. See also crude composition data at: Enbridge Pipelines Inc. 2013 Crude Characteristics No. 44, Available at: http://www.enbridge.com/DeliveringEnergy/Shippers/~/media/www/Site%20Documents/Delivering%20Energy/2013%20Mainline%20Crude%20Characteristics.pdf.

feedstock shown in Table 1. When refined, it yields very little residuum (coker feed) and large amounts of gasoline. Figure 3 The current slate, which is similar to the Kern County crude shown in Figure 3, consists of heavy (API 19°) (i.e., not volatile), sour (4.6% sulfur) crude. When refined, it yields large amounts of residuum, which must be processed in the cokers to extract lighter products amenable to pipelines transport and further processing at Rodeo.

Figure 3
Composition of Bakken Compared to
Typical Heavy Crude (Kern)

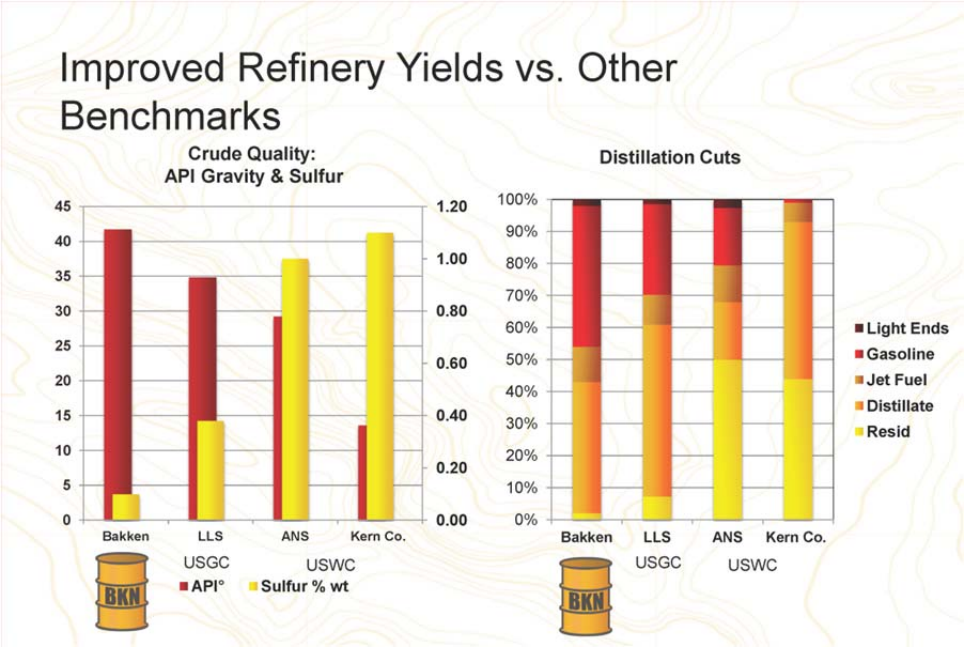

CBE-47

The Rail Spur Project is being designed to import essentially 100% of the Refinery's permitted daily throughput crude capacity by rail[12] and 73% of its annual

[11] Bakken has recently soured and sulfur content of 0.17-2.0 ppm are now reported. Prices fell with the souring. See https://www.onepetro.org/conference-paper/SPE-141434-MS; http://www.reuters.com/article/2013/05/29/column-kemp-bakken-pipelines-idUSL5N0EA3SU20130529.

[12] In the Rail Spur baseline, assumed to be 2010 to 2012, the Refinery processed an average of 38,029 BPD. DEIR, Table 2.7. The permitted maximum daily throughput in the baseline is 44,500 BPD. DEIR, Table 3.1. The Rail Spur Project is designed to import one unit train per day, carrying up to 2,190,000 gallons or up to 51,143 BPD of crude oil. DEIR, pp. ES-5, 1-4. An FEIR has been issued for a throughput increase project which would increase the daily permit level by 10% to a maximum of 48,950 BPD (DEIR, p. 2-28 and Table 3.2) and the annual throughput from 16,242,500 BPY to 17,866,750 BPY. Throughput FEIR, p. 2-26.

average throughput.[13] While small amounts of Bakken could be blended with locally sourced or heavy high sulfur crudes or imported tar sand crudes without significant refinery design changes, it is unlikely that Bakken would ever comprise a large fraction of the Santa Maria crude slate without major capital projects not disclosed in the DEIR. The Santa Maria Refinery is not designed to process light sweet crude. Further, as discussed elsewhere in these comments, light sweet crudes such as Bakken generally command a premium in the market. Thus, it is unlikely that Bakken crudes would comprise a significant fraction of the Santa Maria slate as long as cheaper Canadian tar sands crudes are available.

A switch to Bakken would require significant modifications at both the Santa Maria and Rodeo Refineries that are not disclosed in the DEIR. The cokers and sulfur recovery unit, for example, would likely be idled or modified to reduce their processing rates if large amounts of Bakken were refined as Bakken contains very little residuum, *i.e.*, the coker feed, and very little sulfur. New storage tanks would be required, or an increase in permitted throughputs of existing storage tanks and changes in the design of tank vapor control systems to handle higher vapor pressure materials would be required. The capital investment in most of the existing refining equipment would be lost along with the income from selling sulfur and coke. An entirely different refinery would be required to capture maximum value from Bakken crude. No such changes are disclosed in the DEIR. CBE-47

Further, emissions from the Refinery and pump stations along the pipeline connecting Santa Maria and Rodeo would be significantly different from those in the baseline. If the crude slate were switched to Bakken, combustion emissions at the Santa Maria Refinery would decrease, offsetting some of the increases in locomotive emissions. However, volatile organic compound (VOC) and hazardous air pollutant (e.g., benzene) emissions from tanks and fugitive components, including pump stations along the pipeline (Santa Margarita, Shandon, Cuesta), would significantly increase, likely enough to trigger PSD review for the rail spur as a major modification. These increases would also result in significant worker and public health impacts.

Changes in the type and amount of semi-refined products sent to Rodeo would also change, resulting in changes in emissions at Rodeo. The DEIR does not disclose any changes in emissions at the Santa Maria or Rodeo Refineries from processing the rail-imported crude. This omission either eliminates Bakken as the major crude import, pointing to a heavy, higher sulfur crude, such as tar sands, or renders the DEIR deficient for failing to analyze the impacts of the crude switch.

[13] The 2012 throughput was 13,274,829 bbl/year, 3-year average throughput was 13,858,563 bbl/year. The project maximum delivery assuming 250 trains/year @ 73 rail cars/train and 30,000 bbl/car =**13,035,714 bbl/year** or **73%** of the permitted throughput of **17,866,750 bbl/year**. DEIR, p. 2-26.

B. Tar Sands Crudes as Feedstock for the Santa Maria Refinery

Canadian tar sands crudes are a "North American sourced crude" that could be imported by the Rail Spur Project. These crudes are also chemically distinct from the current crude slate. The DEIR does not mention Canadian tar sands crudes, which we believe are the most likely crude source. They are likely not mentioned as tar sands crudes have numerous well documented environmental problems[14] and would not be welcome in California due to their well known adverse impacts. However, the Project design and various other information in the DEIR indicate the Project is being designed to import both tar sands crudes and Bakken crudes. Thus, the DEIR must be revised to evaluate the impacts of importing up to 100% of both crudes, which have different impacts. The evidence indicating the Project is designed to import tar sands crudes is summarized in this comment.

CBE-48

The Project description indicates the Rail Spur Project would import crude oil "sourced from oilfields throughout North America based on market economics and other factors..." DEIR, p. ES-3. Tar sands crudes are North American sourced crudes. Further, as defined by the International Energy Agency, and acknowledged in the Land Use Permit Application, the term "crude oil" comprises crude oil, natural gas liquids, refinery feedstocks, and additives as well as other hydrocarbons (including emulsified oils, synthetic crude oil, mineral oils extracted from bituminous minerals such as oil shale, bituminous sand, etc., and oils from coal liquefaction). Crude oil is a mineral oil consisting of a mixture of hydrocarbons of natural origin and associated impurities, such as sulphur.[15] The DEIR does not propose any condition excluding tar sands crudes. Thus, tar sands crudes cannot be ruled out. In fact, the Project is being designed to import tar sands crude. The evidence supporting this is outlined below.

1. Tank Car Capacity

CBE-49

The Project is designed to use two different sized rail cars in the unit trains: (1) 80 rail cars carrying 23,500 gallons each and (2) 73 railcars carrying 30,000 gallons each. DEIR ES-5. The capacity of a rail car is determined by the weight of the loaded car and the maximum allowed weight on the rail line, which is ultimately determined by the density of the material contained in the car. The maximum allowable weight on most freight rail lines coming out of Canada is 286,000 lbs, including the weight of the car.[16]

For light crudes, such as Bakken, the ideal rail tank car has a capacity of 30,000 to 32,000 gallons, given the 286,000 lb rail line weight restriction. For heavier crudes, such

[14] EIP, Tar Sands: Feeding U.S. Refinery Expansions with Dirty Fuel, June 2008, Available at: http://environmentalintegrity.org/pdf/publications/Tar_Sand_Report.pdf.

[15] http://www.slocounty.ca.gov/Assets/PL/Santa+Maria+Refinery+Rail+Project/phillipslanduse.pdf.

[16] Allowable Gross Weight Map, Available at: http://www.uprr.com/aboutup/maps/attachments/allow_gross_full.pdf. See also 49 CFR 179.13, Tank Car Capacity and Gross Weight Limitation.

as tar sands, the ideal tank car has a capacity of about 25,000 gallons, given this limit.[17] Thus, the Project described in the DEIR contemplates both Bakken and tar sands, as it describes the Project as using tank cars carrying either 23,500 gallons (a classic tar sands railcar) or 30,000 gallons (a classic light crude railcar) of crude oil. The Bakken train configuration option would allow the import of more crude than the permitted maximum daily crude throughput (51,143 BPD vs 48,950 BPD). CBE-49

2. Hydrogen Sulfide Levels

The DEIR includes an odor impact analysis that assumes "the expected H_2S content of the crude oil vapor could be about one percent" based on the Applicant's expected H_2S content of crude oil vapor. DEIR, p. 4.3-51. This is much higher than H_2S levels in Bakken crude vapors. Bakken crude oil contains less than 0.2% H_2S and the headspace vapors would be significantly lower. Thus, the Applicant is expecting to import high H_2S crudes. Tar sands crudes contains high H_2S concentrations.[18] CBE-50

3. Vapor Pressure Limits

Phillips 66 asserted in its responses to comments on the Draft EIR for the Propane Recovery Project at Rodeo that: "Prior to shipment of the intermediates produced at Santa Maria, the semi-refined material is stored in tankage. The tankage has vapor pressure limits imposed by the County Air District which acts as a constraint regarding how much butane/propane can be included in the intermediates. Accordingly... no new propane/butane can be added to the intermediates sent from Santa Maria to Rodeo regardless of the types of crude that may be processed at Santa Maria."[19] If true, this eliminates Bakken as a crude that would imported by the rail spur, as it contains high concentrations of volatile components that would significantly increase vapor pressure of material stored in tanks. This points to the import of tar sand crudes, which are similar to the heavy crudes currently refined at Santa Maria. CBE-51

4. Cost-Advantaged Crudes

The DEIR indicates one of the purposes of the Project is to obtain "competitively priced crude oil." DEIR, p. 2-30. Tar sands and Bakken are both "competitively priced", cost-advantaged crudes because they are stranded, with no pipeline access and thus must be delivered by rail.[20] As refineries are not equipped to take delivery of large amounts of CBE-52

[17] Association of American Railroads, Moving Crude Petroleum by Rail, May 2013, p. 10.

[18] http://www.crudemonitor.ca/home.php.

[19] Letter from Mark E. Evans, Phillips 66 San Francisco Refinery Manager, to Chair Karen Mitchoff and Members of the Contra Costa County Board of Supervisors, Re: Phillips 66 Propane Recovery Project, p. 6, January 6, 2014, Available at: http://64.166.146.155/docs/2014/BOS/20140121_330/16707_Exhibit7-P66Response.pdf.

[20] Small amounts of Canadian tar sands crudes are currently arriving on the west coast by ship. However, the pipeline capacity to transport the tar sands crude to the west coast and the rail capacity to transport it to the west coast for subsequent water delivery is currently very limited. However, projects are underway to

crude by rail, which requires large unit trains, significant infrastructure improvements, such as the Santa Maria Rail Spur Project, are required to import them to the west coast. The most cost advantaged of those available is tar sands crudes, which are both closer to Santa Maria and have less value in the refining market due to their composition, which is similar to the heavy sour crudes now processed at Santa Maria.

CBE-52

Cost-advantaged crude sells at a discount relative to crude oils tied to the global benchmark, North Sea Brent crude. A recent presentation by a Phillips 66 competitor identified tar sands crudes as the most competitively priced crudes to import into the California market by rail.[21] The cost-advantaged crude oils identified by Valero are shown in Figure 4.

---

alleviate these bottlenecks, including a Phillips 66 project at its Ferndale facility in Washington. The Ferndale project would allow direct import of tar sands crude at the Rodeo Marine Terminal.

[21] Valero, UBS Global Oil and Gas Conference, May 21-22, 2013, p. 10, Available at: http://www.valero.com/InvestorRelations/Pages/EventsPresentations.aspx. provided as Appendix D to TGG Comments.

Figure 4
Cost-Advantaged Crudes
That Could Be Imported By Rail[22]

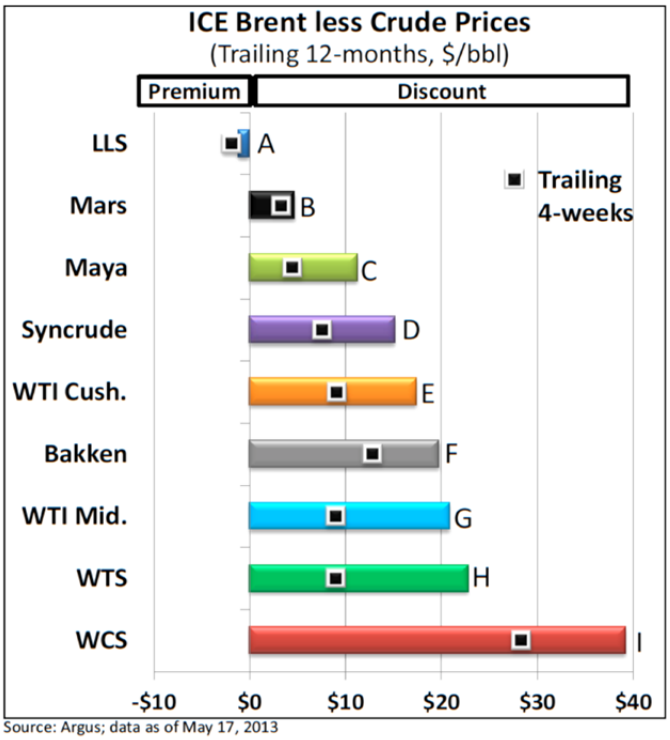

CBE-52

[22] **Brent** is light sweet crude oil sourced from the North Sea, priced at export point there. It has an API gravity of 37.9° and 0.45% sulfur. **LLS** is light Louisiana sweet, priced at St. James, LA. It has an API gravity of 37.0° and 0.38% sulfur. **MARS** is a medium sour blended crude marketed into the Gulf coast and mid-continent regions, priced at Clovelly LA. It has an API gravity of 28.7° and 1.8% sulfur. **Maya** is a heavy sour crude oil from Mexico, priced at export point there. It has an API gravity of 22° and 3.3% sulfur. **WTI Cush.** is West Texas Intermediate crude priced at Cushing, OK, a major trading hub for crude oil. It is a light crude oil with an API gravity of 39.0° and 0.4% sulfur (see also http://en.wikipedia.org/wiki/West_Texas_Intermediate). **WTI Mid**. is West Texas Intermediate (API gravity of 39.0° and 0.4% sulfur) priced at Midland TX (proximate to Permian Basin production). **WTS** is west Texas Sour priced at Midland, TX and an API gravity of 33.5° and 1.9% sulfur. **Syncrude** is a light sweet synthetic Canadian tar sands crude consisting of a bottomless blend of hydrotreated naphtha, distillate, and gas oil fractions produced from a coker and hydrocracker based upgrader facility in Canada; priced at Edmonton Alberta. It typically has an API gravity of 31.0° to 33.0° and 0.1% to 0.2% sulfur (see also http://www.crudemonitor.ca/crude.php?acr=SYN). **WCS** is Western Canadian Select, priced at Hardesty, Alberta. This is a tar sands DilBit crude with API gravity of 20.0° to 21.0° and 3.4% to 3.7% sulfur (see also http://www.crudemonitor.ca/crude.php?acr=WCS).
Sources: Valero crude price data (in Figure 2) are sourced to Argus, so crude specifications in this footnote are based on Argus Methodology and Specifications: Americas Crude (Last Updated: May 2013) http://media.argusmedia.com/~/media/Files/PDFs/Meth/argus_americas_crude.pdf and (for Brent) Argus Crude (Updated: June 2013) http://media.argusmedia.com/~/media/Files/PDFs/Meth/argus_crude.pdf, The pricing locations specified are those shown in Valero, UBS Global Oil and Gas Conference, May 21-22, 2013, p. 8, Available at: http://www.valero.com/InvestorRelations/Pages/EventsPresentations.aspx, provided as Appendix D to TGG Comments.

The largest growth in cost-advantaged crudes is coming from U.S. shale crudes and heavy Canadian tar sands crudes, both of which are "North American-sourced crude oils." Valero's list of cost-advantaged crudes in Figure 4 indicates that the most cost-advantaged crude is Western Canadian Select (WCS).[23] A recent Phillips 66 presentation, Figure 5, indicates it is clearly considering Canadian tar sands crude options.[24]

Figure 5
Phillips 66 Cost Advantaged Crude Activities

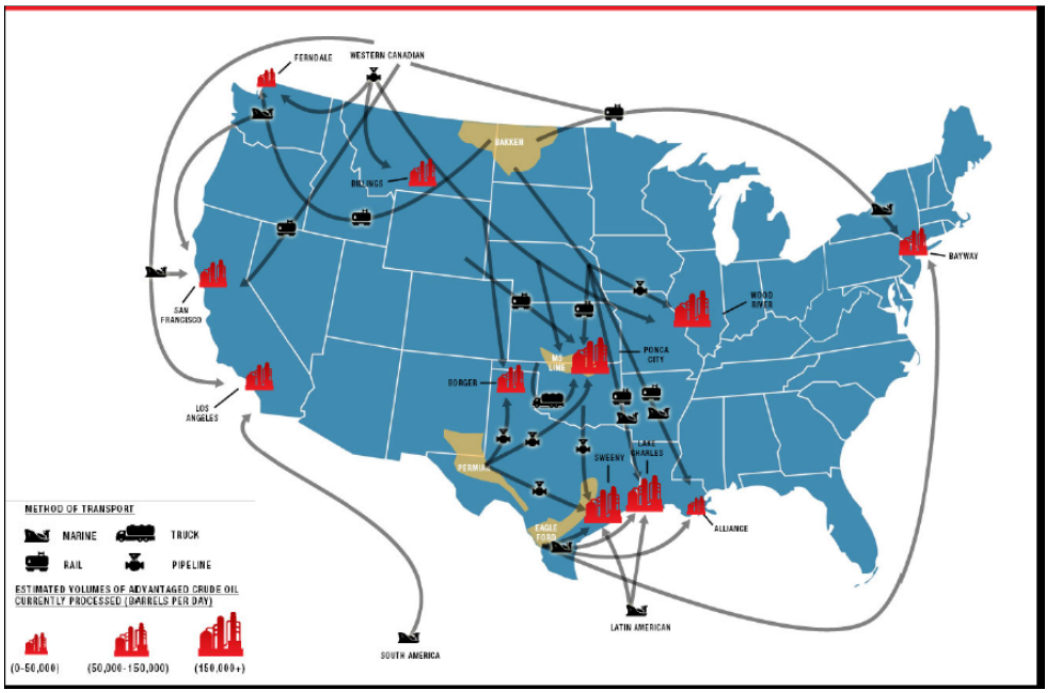

Western Canadian Select is a "DilBit", which is Canadian tar sands bitumen diluted to pipeline specifications with 25% to 30% diluent. The diluent is typically natural gas condensate, pentanes, or naphtha.[25] Most of the tar sands crudes are too heavy to flow in a pipeline or to be transported in the type of railcars proposed for the Project (i.e., no steam coils or steaming facilities at Santa Maria). Thus, they must be

CBE-52

[23] Cenovus Energy, Western Canadian Select (WCS) Fact Sheet, Available at: http://www.cenovus.com/operations/doing-business-with-us/marketing/western-canadian-select-fact-sheet.html. See also CrudeMonitor.ca - Canadian Crude Quality Monitoring, Available at: http://www.crudemonitor.ca/crude.php?acr=WCS.

[24] Phillips 66, Crude by Rail & Intermodal Supply Chain, Optimization and Opportunities, Refiner-Led Summit 2013, Opening Keynote Panel, August 21, 2013.

[25] Gary R. Brierley, Visnja A. Gembicki, and Tim M. Cowan, Changing Refinery Configurations for Heavy and Synthetic Crude Processing, Available at: https://www.edockets.state.mn.us/EFiling/edockets/searchDocuments.do?method=showPoup&documentId=%7BA07DE342-E9B1-402A-83F7-36B18DC3DD05%7D&documentTitle=5639138.

diluted or thinned with a lighter hydrocarbon stream to reduce viscosity and density to meet pipeline specifications.

The potential rail import of DilBits cannot be eliminated and is the most likely rail import due to economic considerations. The failure to disclose the potential import of tar sands crudes, which are chemically distinct from the current crude slate, is a significant omission as the emissions from handling this material are different from the baseline crude slate. The emissions of some pollutants, VOCs and HAPs, for example, are large and will result in significant air quality, odor, and worker and public health impacts.

Western Canadian Select sells for a discount of nearly $40/bbl compared to ICE Brent.[26] Assuming Valero's reported light crude rail delivery cost of about $13/bbl to $15/bbl,[27] WCE would arrive at Santa Maria at a discount of about $23/bbl to $25/bbl relative to ICE Brent. Rail delivery costs for heavy crude would be somewhat higher, and heavy, sour crudes are less valuable than Brent (the global benchmark for light, sweet crudes). Still, the price of WCS delivered to Santa Maria is likely lower (and very likely competitive), compared with all the other cost-advantaged crudes (Fig. 4). Thus, the most likely crude to be imported by rail is one of the tar sands crudes, which are compatible with the design of the Santa Maria Refinery. CBE-52

The cost advantage of delivering North American-sourced light sweet crudes (e.g., Bakken) by rail is less than for tar sands crudes. The North American light crudes are discounted less relative to conventional light sweet crudes (ICE Brent) as North American light crudes have more desirable qualities and are further away from Santa Maria than Canadian tar sands. The cost advantage of these crudes, e.g., Bakken, may be small (or completely disappear) after adding the cost of transport by rail to Santa Maria. However, the competitive position of Bakken (and other crudes) will depend in part on the pricing dynamics in the crude markets,[28] and also how specific refineries are configured.[29] Thus, Bakken cannot be eliminated and must be analyzed in the DEIR.

---

[26] Brent crude is a major trading classification of sweet light crude oil sourced from the North Sea. Brent is the leading global price benchmark for Atlantic basin crude oils and is used to price two thirds of the world's internationally traded crude oil supplies. It contains about 0.37% sulfur and has an API gravity of 38.06°. It is traded on the electronic IntercontinentalExchange, know as ICE. See: http://en.wikipedia.org/wiki/Brent_Crude.

[27] Valero, May 21-22, 2013, p. 11. This is consistent with recently reported rail delivery rates to Los Angeles of $9.50 - $10.50/bbl (Tesoro, Deutsche Bank Energy Conference, January 9, 2014, pdf 14).

[28] Crude pricing is highly dynamic and varies in part based on crude flows. To the extent that California (and other North American coastal markets) are importing Brent and other waterborne crudes, delivered costs typically include a small premium to cover the cost of importing the crudes by tanker. In Valero's analysis in Figure 4, Brent-priced crude is assumed to be imported into East Coast US (PA/NJ), with the delivered price there at a $2 premium over Brent. Market analysis typically assumes that overseas tanker delivery (e.g., from Brent to East or Gulf Coast) costs about $2/barrel.

[29] Bakken and other light, sweet shale crudes are especially attractive for less complex refineries that are configured for light, sweet crudes, as opposed to more complex refineries that can process heavier, sour feedstocks.

IV. ENVIRONMENTAL IMPACTS FROM CRUDE SLATE CHANGES NOT EVALUATED

The Project would replace up to 100% of the current crude slate with crudes imported from other unidentified and chemically distinct sources, e.g., Bakken light sweet crudes or Canadian tar sands crudes. The environmental impacts of refining depend upon the composition of the crude slate, as discussed elsewhere in these comments. The specific chemicals emitted during refining depend upon the chemicals in the starting crude. Thus, the composition of the baseline crude slate is essential to determine environmental impacts.

A. Why Crude Slate Composition Matters

The Project proposes to dramatically change 100% of the crude slate, from heavy high sulfur locally sourced crudes to light low sulfur crude or heavy high sulfur tar sands crudes. However, the DEIR is silent on the composition of these new crude(s) that would be imported by rail and the resulting impacts relative to the baseline crude slate. The composition of the crude slate determines air quality, worker and public heath, risk of upset, and other impacts of the Project and must be disclosed. The specific chemicals emitted during refining depend upon the chemicals in the starting crude. Thus, the composition of the baseline crude slate is essential to determine environmental impacts.

CBE-53

Volatile chemicals in the crude, such as benzene, hydrogen sulfide, and mercaptans, for example, are emitted from tanks, pumps, connectors, and valves that transport, store and process the crude. Total crude sulfur content as reported in the DEIR cannot be used to evaluate odor and health impacts from transport, storing, and processing this crude as the impacts depend upon the concentration of specific sulfur compounds in rail-imports versus the current slate, e.g., the amount of hydrogen sulfide and mercaptans, which most commonly cause odor problems at refineries. The DEIR does not relate even the single crude analysis to any of its impact analyses. In fact, the DEIR did not analyze any of the impacts of a crude switch.

Hazardous air pollutants or HAPs (e.g., benzene) and other Toxic Air Contaminants (TACs (e.g., H_2S) are present in the crude slate and its semi-refined byproducts. These are emitted from thousands of fittings, valves, pumps, compressors, vents, and tanks at the Refinery and along the pipeline connecting Santa Maria and Rodeo. These emissions were not evaluated in the DEIR.

Refining rearranges the composition of the crude to make marketable products. This requires the input of electricity, heat, and steam. These are generated by burning fuel, which releases large amounts of greenhouse gases, nitrogen oxides (NOx), sulfur oxides (SOx), and other chemicals of concern. The amount of electricity, heat and steam depend upon the chemicals in the crude. Some of the potential "North American sourced

crudes" may require much more electricity, heat, and steam to refine than the current slate, increasing emissions and other impacts relative to the baseline crude slate.

B. Crude Slate Baseline Is Not Identified

As this Project involves replacing up to 100% of the current crude slate with dramatically different crudes, baseline crude composition must be reported and impacts must be estimated for the crude switch, relative to baseline crudes. The DEIR does not include baseline crude composition nor does it evaluate any environmental impacts resulting from importing a new crude slate.

The DEIR only includes one analysis of a current crude, a sample collected in March 2008, which is not even in the baseline years and is incomplete. See Table 1. It is unknown where the sample was collected, how it was analyzed, and how it relates to the long-term average slate in the baseline years 2010 - 2012. The Santa Maria Refinery processes crudes from many local and offshore sources that change over time. Is the sample in Table 1 of just one of these crudes, or is it the typical blend that is refined in the baseline? Regardless, one snapshot sample is not sufficient to establish the 2010 - 2012 baseline crude composition.

Further, the reported crude sample data is just for gross lumped parameters such as API gravity and total sulfur content. These lumped parameters are not useful for evaluating environmental impacts. The specific chemicals in the crude and their concentrations are required to evaluate impacts. A good crude assay is essential for comprehensive crude oil evaluation.[30] The type of data required to evaluate emissions would require, at a minimum, the following information for both the current slate and the unidentified "North American-sourced crudes": CBE-53

- Trace elements (As, B, Cd, Cl, Co, Cr, Cu, Hg, Mn, Mo, Ni, Pb, Sb, Se, U, V, Zn)
- Nitrogen (total & basic)
- Sulfur (total, mercaptans, H_2S)
- Residue properties (saturates, aromatics, resins)
- Acidity
- Aromatics content
- Asphaltenes (pentane, hexane and heptane insolubles)
- Hydrogen content
- Carbon residue (Ramsbottom, Conradson)
- Distillation yields
- Properties by cut

[30] CCQTA February 7, 2012, p. 10.

- Hydrocarbon analysis by gas chromatography
- Flammability

This type of information is reported in a crude assay or "fingerprint" of the oil, which are likely available to Phillips 66 but were excluded from the DEIR, foreclosing any meaningful public review of environmental impacts. The DEIR does not identify any specific "North American-sourced crudes" that would be imported, contains only a single, limited crude assay for the current refinery slate which is inadequate to assess the baseline (a 2 year period, not a snapshot sample), or the crude(s) that would be imported by rail. The DEIR also does not contain an analysis of the impact of changes in crude quality on air emissions, odor impact, worker and public health impact, risk of upset, and other impact areas. Thus, the public is left to guess what the impacts might be.

CBE-53

The DEIR should have evaluated the impacts of refining the alternate crude slates the Project is being designed for, as reflected in the unit train specifications. These include both light sweet Bakken and heavy sour tar sands crudes. Alternatively, the DEIR should evaluate these impacts and include mitigation conditions prohibiting their import as publicly available information indicates that Phillips 66 is considering both as they would likely arrive at the Refinery with pricing that is competitive relative to other crudes.

The specific chemicals in the crude, for example, determine which ones will be volatile and lost through equipment leaks and outgassed from tanks, which ones will be difficult to remove at Santa Marian and Rodeo (thus determining how much hydrogen and energy must be expended to remove them), which ones will cause malodors, and which ones might aggravate corrosion, leading to accidental releases from pipelines and other refinery equipment.

V. SIGNIFICANT IMPACTS OF CRUDE SLATE CHANGES NOT DISCLOSED

The Project would change up to 100% of the baseline crude slate from locally sourced heavy high sulfur crudes to a light low sulfur crude or heavy high sulfur tar sands crudes. None of the impacts of the crude switch were disclosed in the DEIR nor any of the information required to assess these impacts.

A. Impacts From Unique Suite Of Sulfur Compounds Not Evaluated

The DEIR reports the amount of total sulfur in a single sample of a currently refined crude. The DEIR also analyzes the odor impacts of unloading an unidentified crude, assuming a crude vapor concentration of 1% H_2S (9600 ppm). DEIR, p. 4.3-51 and Appx. B, p. B-10. The basis for this assumption, e.g., the type of crude and the identification and concentration of all sulfur compounds in its vapors were not disclosed. Odor impacts were just evaluated for unloading, but nowhere else, e.g., crude tanks at the Refinery, processing units within the Refinery. Worker and public health impacts from

CBE-54

emissions of sulfur species were not identified nor were risk of accidents from sulfur-induced corrosion.

The DEIR's assumption that 100% of the sulfur is H_2S is wrong. Sulfur in the potential import crudes comprises a complex collection of individual chemical compounds including hydrogen sulfide, mercaptans, thiophene, benzothiophene, methyl sulfonic acid, dimethyl sulfone, thiacyclohexane, etc. Each crude has a different suite of individual sulfur chemicals. The environmental impacts of "sulfur", including odor, health impacts and risk of upset, depend upon the specific sulfur chemicals and their relative concentrations, not on the "gross" amount of total sulfur expressed as weight percent sulfur in the crude oil, or only as H_2S in unidentified crude vapors.

The role of specific sulfur compounds was clearly and tragically demonstrated in the recent (August 2012) catastrophic accident at the Chevron Richmond Refinery. This accident was caused by the erroneous assumption that sulfur is sulfur, which led to significant corrosion. See next comment. Similarly, while the lighter sulfur compounds such as mercaptans and disulfides found in light sweet crudes may not significantly increase the overall weight percent sulfur in the crude slate, they do lead to impacts, such as aggressive sulfidation corrosion, which can lead to accidental releases. These compounds concentrate in the lower boiling naphtha fractions produced at Santa Maria and would contribute to aggressive sulfidation corrosion in the convection section of naphtha hydrotreating furnaces at Rodeo.[31] CBE-54

The specific sulfur compounds in a crude also will determine which compounds will be emitted from storage tanks and fugitive component, some of which could result in significant odor impacts, e.g., mercaptans, and health impacts. The DEIR is silent on sulfur speciation, lumping all sulfur into only H_2S. DEIR, pp. 4.3-51, B-5.

Regardless of what crude might be brought in by rail, there are potentially significant environmental impacts that will result due to the unique sulfur speciation profile of each crude that have not been disclosed in the DEIR. The DEIR lumps all sulfur compounds together.

B. Accidental Releases From The Refinery May Increase

The Santa Maria Refinery was built in 1955 before current American Petroleum Institute (API) standards were developed to control corrosion and before piping manufacturers began producing carbon steel in compliance with current metallurgical codes. Thus, the metallurgy used throughout much of the Refinery is likely not adequate to handle the unique chemical composition of tar sands crudes without significant upgrades. There is no assurance that required metallurgical upgrades would occur if tar sands crudes dominate the crude slate, as they are very expensive and are not required by any regulatory framework. Experience with changes in crude slate at the Chevron CBE-55

[31] See, for example, Jim McLaughlin, Changing Your Crude Slate, Becht New, May 24, 2013, Available at: http://becht.com/news/becht-news/.

Refinery in Richmond suggest required metallurgical upgrades are ignored, leading to catastrophic accidents.[32] The DEIR is silent on corrosion issues and metallurgical conditions of the Refinery.

Both DilBit and SynBit crudes, which are cost-advantaged North American crudes that could be imported by rail, have high Total Acid Numbers (TAN), which indicates high organic acid content, typically naphthenic acids. These acids are known to cause corrosion at high temperatures, such as occur in many refining units, e.g., in the feed to cokers. As a rule-of-thumb, crude oils with a TAN number greater than 0.5 mgKOH/g[33] are considered to be potentially corrosive and indicates a level of concern. A TAN number greater than 1.0 mgKOH/g is considered to be very high. Canadian tar sands crudes are high TAN crudes. The DilBits, for example, range from 0.98 to 2.42 mgKOH/g.[34]

Sulfidation corrosion from elevated concentrations of sulfur compounds in some of the heavier distillation cuts is also a major concern, especially in the vacuum distillation column, coker, and hydrotreater units. The specific suite of sulfur compounds may lead to increased corrosion. The IS/MND did not disclose either the specific suite of sulfur compounds or the TAN for the proposed crude imports. CBE-55

A crude slate change could result in corrosion from, for example, the particular suite of sulfur compounds or naphthenic acid content, that leads to significant accidental releases, even if the crude slate is within the current design slate basis, due to compositional differences.

This recently occurred at the Chevron Richmond Refinery in the San Francisco Bay. This refinery gradually changed crude slates, while staying within its established crude unit design basis for total weight percent sulfur of the blended feed to the crude unit. The sulfur composition at Chevron Richmond significantly changed over time.[35] This change increased corrosion rates in the 4-sidecut line, which led to a catastrophic pipe failure in the #4 Crude Unit on August 6, 2012. This release sent 15,000 people from the surrounding area for medical treatment due to the release and created huge black clouds of pollution billowing across the San Francisco Bay.

---

[32] U.S. Chemical Safety and Hazard Investigation Board, Interim Investigation Report, Chevron Richmond Refinery Fire, Chevron Richmond Refinery, Richmond, California, August 6, 2012, Draft for Public Release, April 15, 2013, Available at: http://www.csb.gov/chevron-refinery-fire/.

[33] The Total Acid Number measures the composition of acids in a crude. The TAN value is measured as the number of milligrams (mg) of potassium hydroxide (KOH) needed to neutralize the acids in one gram of oil.

[34] www.crudemonitor.ca.

[35] US Chemical Safety and Hazard Investigation Board, 2013, p.34 ("While Chevron stayed under its established crude unit design basis for total wt. % sulfur of the blended feed to the crude unit, the sulfur composition significantly increased over time. This increase in sulfur composition likely increased corrosion rates in the 4-sidecut line.").

These types of accidents can be reasonably expected to result from incorporating tar sands crudes into crude oils processed at the SMR. Even if the range of sulfur and gravity of the crudes remains the same, unless significant upgrades in metallurgy occur, as these crudes have a significant concentration of sulfur in the heavy components of the crude coupled with high TAN and high solids, which aggravate corrosion. The gas oil and vacuum residue piping, for example, may not be able to withstand naphthenic acid or sulfidation corrosion from tar sands crudes, leading to catastrophic releases.[36] Catastrophic releases of air pollution from these types of accidents were not considered in the IS/MND. CBE-55

Refinery emissions released in upsets and malfunctions can, in some cases, be greater than total operational emissions recorded in formal inventories. For example, a recent investigation of 18 Texas oil refineries between 2003 and 2008 found that "upset events" were frequent, with some single upset events producing more toxic air pollution than what was reported to the federal Toxics Release Inventory database for the entire year.[37]

C. Emissions From Diluent Were Not Evaluated

The majority of the crudes that will be imported by rail will likely be a blend of bitumen and diluent due to their discounted price compared to conventional light sweet crudes such as Bakken. Pure undiluted tar sands bitumen is unlikely as the Project description does not disclose any equipment that would be necessary to handle pure bitumen, e.g., rail cars with steam soils, steaming facilities. Undiluted bitumen would eliminate the diluent impacts discussed in this section, but would significantly increase the impacts from refining the heavy ends from increased use of utilities that increase combustion emissions. Setting aside undiluted bitumen, this leaves the question of the amount of diluent that would be mixed with the crude, which ultimately determines impacts. CBE-56

When heavy crude is shipped by pipeline, it needs to be diluted so that it will flow in the pipe. Bitumen blended to pipeline specifications can be loaded on and off conventional rail tank cars like other light crudes. However, bitumen can also be transported by rail as "RailBit", using 15% to 20% diluent. The amount of diluent depends on the type of rail tank car and design details of the offloading facilities, which are not disclosed in the DEIR, which suggests conventional rail cars designed for DilBits and a conventional unloading terminal. Thus, I assume that one of the materials that will be transported by rail is conventional pipeline-quality DilBits with 20% to 30% diluent.

The mixture of diluent and bitumen does not behave the same as a conventional heavy crude, such as present in the current crude slate, because the distribution of hydrocarbons is very different. The blended lighter diluent generally evaporates readily

[36] See, for example, Turini and others, 2011.

[37] J. Ozymy and M.L. Jarrell, Upset over Air Pollution: Analyzing Upset Event Emissions at Petroleum Refineries, Review of Policy Research, v. 28, no. 4, 2011.

when exposed to ambient conditions, leaving behind the heavy ends, the vacuum gas oil (VGO) and residuum.[38] Thus, when a DilBit is released accidentally, it will generally create a difficult to cleanup spill as the heavier bitumen will be left behind.[39] Further, in a storage tank, the diluent also can be rapidly evaporated and emitted through tank openings, emitting high amounts of VOCs and HAPs.

These conventional DilBits, which are the most likely "North American-sourced crudes" to be imported by rail over the long term, given the current economic outlook, are sometimes referred to as "dumbbell" or "barbell" crudes as the majority of the diluent is C_5 to C_{12} and the majority of the bitumen is C_{30}+ boiling range material, with very little in between.[40] This means these crudes have a lot of material boiling at each end of the boiling point curve, but little in the middle. Thus, they yield very little middle distillate fuels, such as diesel, heating oil, kerosene, and jet fuel and more coke, than other heavy crudes. A typical DilBit, for example, will have 15% to 20% by weight light material, basically the added diluent, 10% to 15% middle distillate, and the balance, >75% is heavy residual material (vacuum gas oil and residue) exiting the distillation column. These characteristics distinguish DilBits from crudes currently refined at Santa Maria.[41] Thus, they could generate more coke than the current crude slate, which was not disclosed in the DEIR. CBE-56

The large amount of light material that distills below 149 C is very volatile and can be emitted to the atmosphere from storage tanks and equipment leaks of fugitive components (pumps, compressors, valves, fittings) in much larger amounts than other heavy crudes that it would replace. The DEIR does not indicate whether other heavy crudes processed at the Refinery currently arrive with diluent. Thus, the use of diluent to transport tar sands crudes is likely an important difference between the current heavy crude slates processed at the Refinery and the tar sands crudes that could replace them. This diluent will have impacts during railcar unloading as well as within the Refinery.

The diluent is a low molecular weight organic material with a high vapor pressure that contains high levels of VOCs, sulfur compounds, and HAPs. These would be emitted during unloading and present in emissions from the crude tank(s) and fugitive components from its entry into the Refinery with the crude until it is recovered and marketed at Rodeo. The presence of diluent would increase the vapor pressure of the

---

[38] The residuum is the residue obtained from the oil after nondestructive distillation has removed all of the volatile materials. Residua are black, viscous materials. They may be liquid at room temperature (from the atmospheric distillation tower) or almost solid (generally vacuum residua), depending upon the nature of the crude oil.

[39] A Dilbit Primer: How It's Different from Conventional Oil, Inside Climate News. Available at: http://insideclimatenews.org/news/20120626/dilbit-primer-diluted-bitumen-conventional-oil-tar-sands-Alberta-Kalamazoo-Keystone-XL-Enbridge?page=show.

[40] Gary R. Brierley and others, Changing Refinery Configuration for Heavy and Synthetic Crude Processing, 2006, Available at: https://www.edockets.state.mn.us/EFiling/edockets/searchDocuments.do?method=showPoup&documentId=%7BA07DE342-E9B1-402A-83F7-36B18DC3DD05%7D&documentTitle=5639138.

[41] Stratiev and others, 2010, Table 1, compared to DilBit crude data on www.crudemonitor.ca.

crude, substantially increasing VOC and HAP emissions from tanks and fugitive component leaks compared to those from displaced heavy crudes not blended with diluent and does not address diluent-derived emissions.

The composition of some typical diluents/condensates is reported on the website, www.crudemonitor.ca.[42] The specific diluents that would be present in imported crudes is unknown. The CrudeMonitor information indicates that diluents contain very high concentrations (based on 5-year averages, v/v basis) of the hazardous air pollutants (HAPs) benzene (7,200 ppm to 9,800 ppm); toluene (10,300 ppm to 25,300 ppm); ethyl benzene (900 ppm to 2,900 ppm); and xylenes (4,600 ppm to 23,900 ppm).

The sum of these four compounds is known as "BTEX" or benzene-toluene-ethylbenzene-xylene. The BTEX in diluent ranges from 27,000 ppm to 60,900 ppm. The BTEX in DilBits, blended from these materials, ranges from 8,000 ppm to 12,300 ppm.[43] Similarly, the BTEX in synthetic crude oils (SCOs) ranges from 6,100 ppm to 14,100 ppm.[44] These are very high concentrations that were not considered in the emission calculations in the DEIR or the health risk assessment. These high levels could result in significant worker and public health impacts.

CBE-56

The DEIR does not disclose the BTEX concentrations in the baseline crude slate nor the BTEX concentrations in the range of crudes that could be imported. Rather, it contains only a single mass fraction crude vapor speciation profile that is used only to estimate canister ROG emissions from unloading of trains. However, BTEX from the crude would be emitted from nearly every tank and fugitive component in the Refinery. The DEIR did not evaluate the worker or public health impacts from these emissions anywhere at the facility. Benzene is a carcinogen, the principal one that would be

---

[42] Condensate Blend (CRW) - http://www.crudemonitor.ca/condensate.php?acr=CRW; Fort Saskatchewan Condensate (CFT) - http://www.crudemonitor.ca/condensate.php?acr=CFT; Peace Condensate (CPR) - http://www.crudemonitor.ca/condensate.php?acr=CPR; Pembina Condensate (CPM) - http://www.crudemonitor.ca/condensate.php?acr=CPM; Rangeland Condensate (CRL) - http://www.crudemonitor.ca/condensate.php?acr=CRL; Southern Lights Diluent (SLD) - http://www.crudemonitor.ca/condensate.php?acr=SLD.

[43] DilBits: Access Western Blend (AWB) - http://www.crudemonitor.ca/crude.php?acr=AWB; Borealis Heavy Blend (BHB) - http://www.crudemonitor.ca/crude.php?acr=BHB; Christina Dilbit Blend (CDB) - http://www.crudemonitor.ca/crude.php?acr=CDB; Cold Lake (CL) - http://www.crudemonitor.ca/crude.php?acr=CL; Peace River Heavy (PH) - http://www.crudemonitor.ca/crude.php?acr=PH; Seal Heavy (SH) - http://www.crudemonitor.ca/crude.php?acr=SH; Statoil Cheecham Blend (SCB) - http://www.crudemonitor.ca/crude.php?acr=SCB; Wabasca Heavy (WH) - http://www.crudemonitor.ca/crude.php?acr=WH; Western Canadian Select (WCS) - http://www.crudemonitor.ca/crude.php?acr=WCS; Albian Heavy Synthetic (AHS) (DilSynBit) - http://www.crudemonitor.ca/crude.php?acr=AHS.

[44] SCOs: CNRL Light Sweet Synthetic (CNS) - http://www.crudemonitor.ca/crude.php?acr=CNS; Husky Synthetic Blend (HSB) - http://www.crudemonitor.ca/crude.php?acr=HSB; Long Lake Light Synthetic (PSC) - http://www.crudemonitor.ca/crude.php?acr=PSC; Premium Albian Synthetic (PAS) - http://www.crudemonitor.ca/crude.php?acr=PAS; Shell Synthetic Light (SSX) - http://www.crudemonitor.ca/crude.php?acr=SSX; Suncor Synthetic A (OSA) - http://www.crudemonitor.ca/crude.php?acr=OSA; Syncrude Synthetic (SYN) - http://www.crudemonitor.ca/crude.php?acr=SYN.

emitted by the Project.[45] These emissions would results in significant worker and public health impacts.

Table 2
Comparison of BTEX Levels
in Potential Crude Imports

	Current Crude Slate (in crude vapors) DEIR, p. B-5 (wt.%)[46]	Diluents (5-yr Avg)[47] (wt.%)	Christina DilBit[48] (5-yr Avg) (wt.%)	Western Canadian Select[49] (5-yr Avg) (wt.%)	Bakken[50] Crude (wt.%)
Benzene	?	0.83-1.27	0.27	0.15	0.1-1.0
Ethylbenzene	?	0.11-0.33	0.06	0.06	0.33
Toluene	?	1.32-2.89	0.44	0.27	0.92
Xylenes	?	0.59-2.71	0.34	0.27	1.4

CBE-56

The CrudeMonitor information also indicates that these diluents contain elevated concentrations of volatile mercaptans (9.9 to 103.5 ppm), which are highly odiferous and toxic compounds that will create odor and nuisance problems at the Refinery in the vicinity of the unloading area, crude storage tanks and supporting fugitive components. Mercaptans can be detected at concentrations substantially lower than will be present in emissions from the crude tanks and fugitive emissions from the unloading rack and

[45] Ethylbenzene was classified by OEHHA as a weak carcinogen in 2007. See: http://oehha.ca.gov/tcdb/index.asp.

[46] DEIR did not report BTEX composition of the crudes.

[47] The reported range includes the following diluents: Condensate Blend, Saskatchewan Condensate, Peace Condensate, Pembina Condensate, Rangeland Condensate, and Southern Lights Diluent. The composition data for all of these diluents is found at http://www.crudemonitor.ca. Concentrations reported in volume % (v/v) in this source were converted to weight % by dividing by the ratio of compound density in kg/m^3 at 25 C (benzene =876.5 kg/m^3, toluene = 0.866.9 kg/m^3, ethylbenzene 866.5 kg/m^3, and the xylenes 863 kg/m^3) to crude oil density in kg/m3, as reported at www.crudemonitor.ca, 5-year average. See also Cenovus Energy Inc. Material Safety Data Sheet, Condensate (Sour) and Condensate (Sweet), Available at: http://www.cenovus.com/contractor/msds.html.

[48] Christina DilBit Blend (CDB) -.http://www.crudemonitor.ca/crude.php?acr=CDB. Concentrations reported in volume % (v/v) converted to weight % as explained in footnote 47.

[49] Western Canadian Select (WCS) - http://www.crudemonitor.ca/crude.php?acr=WCS. Concentrations reported in volume % (v/v) converted to weight % as explained in footnote 47.

[50] Cenovus Energy, Material Safety Data Sheet for Light Crude Oil, Bakken (benzene), Available at: http://www.cenovus.com/contractor/docs/CenovusMSDS_BakkenOil.pdf. Other components of BTEX from Keystone DEIS, Tables 3.13-1 (density) and 3.13-2 (BTEX). Concentrations reported in volume % (v/v) converted to weight % as explained in footnote 47.

related components, including pumps, valves, flanges, and connectors.[51] In fact, mercaptans are added to natural gas in very tiny amounts so that the gas can be smelled to facilitate detecting leaks.

Thus, unloading, storing, handling and refining bitumens mixed with diluent and shale crudes such as Bakken would emit VOCs, HAPs, and malodorous sulfur compounds, not found in comparable levels in the existing slate of heavy high sulfur local crudes, depending upon the rail-imported DilBit or shale crude source. There are no restrictions on the crudes, diluent source or their compositions nor any requirements to monitor emissions from tanks and leaking equipment where DilBit-blended and other light crudes would be handled. CBE-56

D. Increased Combustion Emissions From Tar Sands Bitumen Not Evaluated

Tars sands are one group of crudes that could plausibly be imported by rail, as discussed elsewhere in these comments. The composition of tar sands crudes is chemically different from other heavy crudes currently processed at the Refinery as they are tar sands bitumen mixed with diluent. They are unique for two major reasons: (1) presence of large quantities of volatile diluent full of VOCs and toxic chemicals as discussed above and (2) unique chemical composition of the bitumen, the heavy fraction. The previous comment discussed diluent. This comment discusses the unique composition of tar sands bitumens that require more intense processing and thus result in higher emissions.

Tar sands bitumens are composed of higher molecular weight chemicals and are deficient in hydrogen compared to conventional heavy crudes. This means more energy will be required to convert them into the same slate of refined products. Thus, most fired sources in both the Santa Maria and Rodeo Refiners —heaters, boilers, etc.—will have to work harder to generate the same quantity and quality of refined products. This will increase all utilities required to run the refineries - electricity, natural gas, hydrogen, water, and steam. These increases in emissions were not disclosed in the DEIR. This section discusses these bitumens and their impact on refining emissions. CBE-57

Refining converts crude oils into transportation fuels. This is done by removing contaminants (sulfur, nitrogen, metals) and breaking down and reassembling chemicals present in the crude oil charge by adding hydrogen, removing carbon as coke, and applying heat, pressure, and steam in the presence of various catalysts. More intensive refining is required to convert tar sands crudes into useful products than other heavy crudes. This means a greater amount of energy must be expended to yield the same product slate. Thus, all of the combustion sources in a refinery, such as heaters and boilers, must work harder and thus emit more pollutants, than when refining conventional heavy and other crudes. The DEIR fails completely to analyze the impact of crude

[51] American Industrial Hygiene Association, Odor Thresholds for Chemicals with Established Occupational Health Standards, 1989; American Petroleum Institute, Manual on Disposal of Refinery Wastes, Volume on Atmospheric Emissions, Chapter 16 - Odors, May 1976, Table 16-1.

composition on the resulting emissions from generating increased amount of these utilities.

Canadian tar sands bitumen is distinguished from conventional petroleum by the small concentration of low molecular weight hydrocarbons and the abundance of high molecular weight polymeric material.[52] Crudes derived from Canadian tar sands bitumen—DilBits, SCOs and SynBits—are heavier, i.e., have larger, more complex molecules such as asphaltenes,[53] some with molecular weights above 15,000.[54] They generally have higher amounts of coke-forming precursors; larger amounts of contaminants (sulfur, nitrogen nickel, vanadium) that require more intense processing to remove; and are deficient in hydrogen, compared to other heavy crudes.

Thus, to convert them into the same refined products requires more utilities -- electricity, water, heat, and hydrogen. This requires that more fuel be burned in most every fired source at a refinery and that more water be circulated in heat exchangers and cooling towers. Further, this requires more fuel to be burned in any supporting off-site facilities. Under CEQA, these indirect increases in emissions caused by a project must be included in the impact analysis. These increases in fuel consumption release increased amounts of NO_x, SO_x, VOCs, CO, PM10, PM2.5, and HAPs as well as greenhouse gas emissions (GHG). Some of the principal differences are identified below, followed by a discussion of the impacts these differences have on emissions. CBE-57

1. Higher Concentrations of Asphaltenes and Resins

The severity (e.g., temperature, amount of catalyst, hydrogen) of hydrotreating depends on the type of compound a contaminant is bound up in. Lower molecular weight compounds are easier to remove. The difficulty of removal increases in this order: paraffins, naphthenes, and aromatics.[55] Most of the contaminants of concern in tar sands crudes are bound up in high molecular weight aromatic compounds such as asphaltenes that are difficult to remove, meaning more heat, hydrogen, and catalyst are required to convert them to lower molecular weight blend stocks. Some tar sands-derived vacuum gas oils (VGOs), for example, contain no paraffins of any kind. All of the molecules are

[52] O.P. Strausz, The Chemistry of the Alberta Oil Sand Bitumen, Available at: http://web.anl.gov/PCS/acsfuel/preprint%20archive/Files/22_3_MONTREAL_06-77_0171.pdf.

[53] Asphaltenes are nonvolatile fractions of petroleum that contain the highest proportions of heteroatoms, i.e., sulfur, nitrogen, oxygen. The asphaltene fraction is that portion of material that is precipitated when a large excess of a low-boiling liquid hydrocarbon such as pentane is added. They are dark brown to black amorphous solids that do not melt prior to decomposition and are soluble in benzene and aromatic naphthas.

[54] O.P. Strausz, The Chemistry of the Alberta Oil Sand Bitumen, Available at: http://web.anl.gov/PCS/acsfuel/preprint%20archive/Files/22_3_MONTREAL_06-77_0171.pdf.

[55] Gary et al., 2007, p. 200.

aromatics, naphthenes, or sulfur species that require large amounts of hydrogen to hydrotreat, compared to other heavy crudes.[56]

Asphaltenes and resins generally occur in tar sands bitumens in much higher amounts than in other heavy crudes. They are the nonvolatile fractions of petroleum and contain the highest proportions of sulfur, nitrogen, and oxygen.[57] They have a marked effect on refining and result in the deposition of high amounts of coke during thermal processing in the coker. They also form layers of coke in hydrotreating reactors, such as those at Rodeo, requiring increased heat input, leading to localized or even general overheating and thus even more coke deposition. This seriously affects catalyst activity resulting in a marked decrease in the rate of desulfurization. They also require more intense processing in the coker required to break them down into lighter products. These factors require increases in steam and heat input, both of which generate combustion emissions -- NO_x, SO_x, CO, VOCs, PM10, and PM2.5.

Further, if the crude includes a synthetic crude, SCO, for example, the material has been previously hydrotreated. Thus, the remaining contaminants (e.g., sulfur, nitrogen), while present in small amounts, are much more difficult to remove (due to their chemical form, buried in complex aromatics), requiring higher temperatures, more catalyst, and more hydrogen.[58] CBE-57

The higher amounts of asphaltenes and resins generate more heavy feedstocks that require more severe processing than lighter feedstocks. The coker, for example, makes more coker distillate and gas oil, that would contribute to the propane and butane that would be recovered at Rodeo, compared to conventional heavy crudes. Similarly, the Crude Unit makes more atmospheric and vacuum gas oils that would be sent to Rodeo,[59] increasing emissions there, including fugitive VOC emissions from equipment leaks and combustion emissions from burning more fuel.

2. Hydrogen Deficiency

Tar sands crudes are hydrogen-deficient compared to heavy and conventional crude oils and thus require substantial hydrogen addition during refining, beyond that required to remove contaminants (sulfur, nitrogen, metals) from non-tar-sands crudes. This again means more combustion emissions from burning more fuel. As the refining processes that use hydrogen, e.g., hydrotreating, are all located at Rodeo, this is further

[56] See, for example, the discussion of hydrotreating and hydrocracking of Athabasca tar sands cuts in Brierley et al. 2006, pp. 11-17.

[57] James G. Speight, The Desulfurization of Heavy Oils and Residua, Marcel Dekker, Inc., 1981, Tables 1-1, 2-2, 2-3, 2-4 and p. 13 and James G. Speight, Synthetic Fuels Handbook: Properties, Process, and Performance, McGraw-Hill, 2008, Tables A.2, A.3, and A.4.

[58] See, for example, Brierley et al. 2006, p. 8 ("The sulfur and nitrogen species left in the kerosene and diesel cuts are the most refractory, difficult-to-treat species that could not be removed in the upgrader's relatively high-pressure hydrotreaters."); Turini et al. 2011 p. 4.

[59] See, for example, Turini et al. 2011, p. 9.

evidence that a crude slate switch involving tar sands would necessarily be directly linked to Rodeo.

3. Higher Concentrations of Catalyst Contaminants

Tar sands bitumens contain about 1.5 times more sulfur, nitrogen, oxygen, nickel and vanadium than typical heavy crudes.[60] Thus, much more hydrogen per barrel of feed and higher temperatures would be required at Rodeo to remove the larger amounts of these poisons from semi-refined products. These impurities are removed by reacting hydrogen with the crude fractions over a fixed catalyst bed at elevated temperature. The oil feed is mixed with substantial quantities of hydrogen either before or after it is preheated, generally to 500 F to 800 F. The amount of hydrogen required for a particular application depends on the hydrogen content of the feed and products and the amount of the contaminants to be removed. Hydrogen consumption is typically about 70 standard cubic foot per barrel (scf/bbl) of feed per percent sulfur, about 320 scf/bbl feed per percent nitrogen, and 180 scf/bbl per percent oxygen removed.[61]

CBE-57

Canadian tar sands crudes generally have higher nitrogen content, 3,000 to >6,000 ppm[62] and specifically higher organic nitrogen content, particularly in the naphtha range, than other heavy crudes.[63] This nitrogen is mostly bound up in complex aromatic compounds that require a lot of hydrogen to remove. This would affect emissions at Rodeo in five ways.

First, additional hydrotreating is required to remove them, which increases hydrogen and energy input. Second, they deactivate the cracking catalysts, which requires more energy and hence more emissions to achieve the same end result. Third, they increase the nitrogen content of the fuel gas fired in combustion sources, which increases NO_x emissions from all fired sources that use refinery fuel gas. Fourth, nitrogen in tar sands crudes is present in higher molecular weight compounds than in other heavy crudes and thus requires more hydrogen and energy to remove. Fifth, some of this nitrogen will be converted to ammonia and other chemically bound nitrogen compounds, such as pyridines and pyrroles. These become part of the fuel gas and could increase NO_x from fired sources. They further may be routed to the flares, where they would increase NO_x.

---

[60] See, for example, USGS, 2007, Table 1.

[61] James H. Gary, Glenn E. Handwerk, and Mark J. Kaiser, Petroleum Refining: Technology and Economics, 5th Ed., CRC Press, 2007, p. 200 and A.M. Aitani, Processes to Enhance Refinery-Hydrogen Production, Int. J. Hydrogen Energy, v. 21, no. 4, pp. 267-271, 1996.

[62] Murray R. Gray, Tutorial on Upgrading of Oil Sands Bitumen, University of Alberta, Available at: http://www.ualberta.ca/~gray/Links%20&%20Docs/Web%20Upgrading%20Tutorial.pdf.

[63] See, for example, James G. Speight, Synthetic Fuels Handbook: Properties, Process, and Performance, McGraw-Hill, 2008, Appendix A.

These types of chemical differences between the current crude slate and the new crude slate facilitated by the Rail Spur Project were not addressed at all in the DEIR. While both the Santa Maria and Rodeo Refineries may currently be operating within their permit limits, and may even continue to do so, the potential subject increases must be measured and evaluated relative to the CEQA baseline. CBE-57

E. Increased Metal Content Not Evaluated

The baseline slate includes very little tar sands crudes, potentially from 2% to 7% of the crude slate. DEIR, p. 2-27. The Project could increase the import of heavy sour tar sands crude by up to the entire permitted capacity of the Refinery. These crudes have higher metal content than the baseline crude slate.[64] This represents a significant increase in a type of crude that will increase emissions compared to the current Refinery slate. The impacts from this change were not evaluated in the DEIR.

The U.S. Geological Survey ("USGS"), for example, reported that "natural bitumen," the source of all Canadian tar sands-derived oils, contains 102 times more copper, 21 times more vanadium, 11 times more sulfur, six times more nitrogen, 11 times more nickel, and 5 times more lead than conventional heavy crude oil, such as those currently refined from local sources.[65] CBE-58

The environmental damage caused by these metal pollutants includes bioaccumulation of toxic chemicals up the food chain and a direct health hazard from air emissions. These metals, for example, mostly end up in the coke. Thus, higher levels of metals will be present in the coke. The DEIR indicates that "[m]etals that are present in coke have been detected in grouondwater at concentrations above the California Department of Health maximum contamination levels (MCL) in the area around the coke pile runoff area..." DEIR, p. 4.7-39/40. Thus, a switch to tar sands crude could contribute to this existing significant impact from the coke pile, which was not disclosed in the DEIR.

Further, larger amounts of coke may be produced by the tar sands crudes than the current crude slate. The metal content of fugitive dust from coke piles could increase to dangerous levels. The California Air Resources Board, for example, has classified lead

---

[64] Straatiev and other, 2010, Table 1; Brian Hitchon and R.H. Filby, Geochemical Studies - 1 Trace Elements in Alberta Crude Oils, http://www.ags.gov.ab.ca/publications/OFR/PDF/OFR_1983_02.PDF; F.S. Jacobs and R.H. Filby, Trace Element Composition of Athabasca Tar Sands and Extracted Bitumens, Atomic and Nuclear Methods in Fossil Energy Research, 1982, pp 49-59; James G. Speight, The Desulfurization of Heavy Oils and Residua, Marcel Dekker, Inc., 1981, Tables 1-1, 2-2, 2-3, 2-4 and p. 13 and James G. Speight, Synthetic Fuels Handbook: Properties, Process, and Performance, McGraw-Hill, 2008, Tables A.2, A.3, and A.4; Pat Swafford, Evaluating Canadian Crudes in US Gulf Coast Refineries, Crude Oil Quality Association Meeting, February 11, 2010, Available at: http://www.coqa-inc.org/20100211_Swafford_Crude_Evaluations.pdf .

[65] R.F. Meyer, E.D. Attanasi, and P.A. Freeman, Heavy Oil and Natural Bitumen Resources in Geological Basins of the World, U.S. Geological Survey Open-File Report 2007-1084, 2007, p. 14, Table 1, Available at http://pubs.usgs.gov/of/2007/1084/OF2007-1084v1.pdf.

as a pollutant with no safe threshold level of exposure below which there are no adverse health effects. Thus, just the increase in lead from switching up to tar sands crude is a significant impact that was not disclosed in the DEIR. Accordingly, crude quality is critical for a thorough evaluation of the impacts of a crude switch, such as facilitated by rail import. CBE-58

sec. 4.11 public services and utilities, does not address how a local train accident would be handled, given existing services and utilities. It couldn't be, which is a significant unmitigated impact.

VI. HAZARDS AND HAZARDOUS MATERIALS IMPACTS ARE SIGNIFICANT

Section 4.7 of the DEIR contains the "hazards and hazardous materials" impact analyses, sometimes call the risk of upset analysis. This section evaluates two separate impacts: (1) on-site accidents from crude oil unloading through pipeline transport to storage tanks at the Refinery and (2) rail transport accidents. The supporting material includes extensive discussion of the applicable regulatory framework and general methods used to analyze these types of impacts. However, the project-specific results and conclusions appear magically, with no support for or explanation of how the conclusions were reached. The available information indicates that the DEIR's analysis is fatally flawed and the risk of upset impacts are highly significant. CBE-59

A. Crude Slate Not Disclosed

As explained elsewhere in these comments, the composition of the crude slate must be known to evaluate impacts. This is particularly critical for the analysis of accidents as the probability, severity, and consequences of an accident depend directly on the chemicals in the crude. They determine, for example, the flammability of the crude and its potential to corrode tank cars, pumps, pipelines, tanks, and other equipment hand store and transport the crude. The Federal Railroad Administration, for example, has observed "an increasing number of incidents involving damage to tank cars in crude oil service in the form of severe corrosion of the internal surface of the tank, manway covers, and valves and fittings," and suggested that this may involve contaminated oil.[5] Further, some types of crudes are more challenging to contain and cleanup in the event of an accidental release. CBE-60

As the DEIR admits: "the thermal radiation hazards from hydrocarbon pool fires depends on a number of parameters, including the composition of the hydrocarbon mixture..." DEIR, p. 4.7-15. The Project involves a dramatic change in crude slate composition, especially its hydrocarbon composition. The crude slate will change from a relatively inflammable material with high molecular weight hydrocarbons to new crudes ranging from light, highly volatile crudes with low molecular weight hydrocarbons such as propane and butane (Bakken) to heavy, highly corrosive tar sands crudes blended with condensates that can cause different types of accidents. See Comments V and VI.B.

The DEIR asserts that "[r]adiative properties of the fire were based on a detailed analysis of typical crude oil that would be delivered by rail". DEIR, p. 4.7-16. However, the DEIR does not identify this crude further. Where is the detailed crude analysis that the fire analyses was based on? What specific crude was analyzed, i.e., was it Bakken or tar sands or something else? How representative is it of the range of crudes that would be imported by rail? Where are the assumed properties used to assess flammability and the resulting analysis itself? What is the basis of the burning rate of 0.228 mm/s assumed for "light crude oil"? DEIR, p. 4.7-16.

CBE-60

The hazards section of the DEIR does not acknowledge that a range of crudes will be imported by rail with widely varying properties, or indicate that crude composition was considered in any other aspects of the various hazard analyses except fire hazard. The DEIR, for example, notes that unloaded crude would be sent by pipeline to "be stored in the existing refinery storage tanks. Therefore, crude oil storage would not result in any increase in fire and explosion risk at the refinery". DEIR, p. 4.7-57. This is wrong because the projected change in crude slate composition will increase the probability of accidental releases from the tank farm and their consequences, as the stored crudes will be either more volatile, flammable, and/or corrosive. The DEIR has failed to analyze these impacts.

B. Risk of Upset Impacts Are Significant

The DEIR evaluated several crude release accident scenarios: (1) tank farm releases; (2) on-site crude railcar accident pool fires; (3) on-site crude railcar accident BLEVES; (4) crude pipeline accident pool fires; (5) off-site train accidents. DEIR, Appx. H. The DEIR suggests that none of these accident scenarios result in significant impacts. DEIR, Sec. 4.7.4.

CBE-61

However, the DEIR buries the supporting analyses in dense appendices that are not accessible to the typical DEIR reviewer. The DEIR fails to explain how to translate the results of these analyses into impact conclusions that can be understood by non-subject-matter experts, thus preventing meaningful public review of the impacts. The DEIR further incorrectly summarizes the results of these analyses in the text as insignificant, when, in fact, they are highly significant. Finally, the DEIR uses the wrong significance thresholds, fails to evaluate the impact of crude slate changes, and fails to evaluate impacts to on-site workers, the most at risk population.

1. <u>Worker Impacts Excluded</u>

The DEIR fails to evaluate the impacts to workers, arguing that "OSHA related worker issues are outside the scope of the EIR." DEIR, p. 4.3-52. The DEIR specifically excludes workers from its risk of upset significance criteria, arguing they do not apply to occupational safety, *viz.*, "Occupational risk, which is governed by state and federal OSHAs is considered to be more voluntary and is generally judged according to more lenient standards of significance than those used for involuntary exposure". DEIR, p. 4.7-55.

CBE-62

However, neither state nor federal OSHA nor other regulations cover the types of involuntary risks imposed by unit train accidents and exploding pipelines and tanks on workers in the vicinity of these facilities. A death is a death and it should not matter whether it is an on-site worker, off-site worker, or other member of the public. A worker is a member of society at large and is protected by CEQA. None of the federal and state laws reviewed in DEIR Section 4.7.2 include any measures to protect any workers, on-site or off-site, from train, pipeline, and tank farm accidents.

CBE-62

Regardless, CEQA is not a gap-filling regulatory program. CEQA covers all impacts to all media -- the public, air, water, land, biological resources -- regardless of how they may be classified, i.e., on-site workers, off-site workers, residents, threatened and endangered species, etc. These types of catastrophic events are entirely outside of the jurisdiction of OSHA or any other federal or state regulatory program and must be evaluated in the DEIR. The DEIR must be revised to address worker impacts and be recirculated.

2. Tank Farm Accidents Are Significant

The DEIR states that imported crude would be sent through a 3,525-foot long pipeline to existing refinery storage tanks, concluding: "Therefore, crude oil storage would not result in any increase in fire and explosion risk at the refinery." DEIR, p. 4.7-57. The DEIR does not contain any analysis to support this assertion. See, for example, Appendix H, which does not include a storage tank scenario, but rather only rail car and pipeline accident scenarios.

This unsupported assertion is incorrect because it assumes no change in properties of stored crude. The Project would change the composition of the crude slate. If highly flammable Bakken crudes were imported, for example, the risk of fire and explosion would significantly increase at the tank farm, impacting not only workers, but also offsite parties. The flammability classification of Bakken is rated at Level 4, the highest flammability classification, the same as for methane and propane gases.[66] On January 2, 2014, the Pipeline and Hazardous Materials Safety Administration (PHMSA) issued a safety alert addressing the flammability characteristics of crude oil produced from the Bakken Shale formation.[67] Alternatively, if tar sands crudes were imported, corrosion issues could arise at the existing tanks, leading to accidental releases. Neither of these risk scenarios was identified or evaluated in the DEIR.

CBE-63

Rather, the DEIR only contains a description of the existing tank farm. DEIR, Sec. 4.7.1.5, stating: "Thermal radiation impacts from crude oil tank fires could cause injury 220 feet away." DEIR, p. 4.7-37. The DEIR goes on to explain that the closest receptor is further away. Thus, the DEIR asserts: "Given the properties of crude oil, the

[66] Cenovus MSDS sheet for Bakken Crude.
[67] PHMSA, Safety Alert, January 2, 2014: Preliminary Guidance from Operation Classification.

likelihood of an explosion is virtually non-existent and consequently explosion scenarios are not addressed further in this document." DEIR, p. 4.7-37.

However, the analyses supporting the claimed 220-foot injury distance is not included in the DEIR and apparently based on the crude slate currently processed at the Santa Maria Refinery. Further, the nature of the "injury" is not disclosed. Regardless, a switch from current crude to Bakken crude would significantly increase the injury distance, likely far in excess of the 425-foot distance to the nearest receptor. Thus, accidental releases from the tank farm were not analyzed in the DEIR and are likely highly significant. CBE-63

3. Pipeline Accidents Are Significant

The DEIR contains a crude pipeline accident analysis for a pool fire, assuming a spill of 692,000 barrels of crude for wind speeds of 1 meter per second (m/s) (about 2 miles per hour (mi/hr)) and 20 m/s (about 45 mi/hr). DEIR, Appx. H, pp. H-14 to H-17. This analysis is dismissed with the misleading characterization that "[w]orst-case thermal radiation injury levels would extend approximately 800 meters from the pool fire that could result from a catastrophic pipeline failure on the refinery site. Based on this modeling, it was determined that there would not be any potential for offsite injuries associated with worst-case unloading facility crude oil spill and fire." DEIR, p. 4.7-57.

The supporting analyses are included in Appendix H, in a format that is not accessible to the average reviewer. Thus, they are extracted and summarized in Table 3. CBE-64

Table 3
Crude Pipeline Accident Pool Fire
(DEIR, Appx. H)

Heat Flux (kW/m2) =	5	10	12.5
Wind Speed (m/s)	**Impact Distance (ft)**		
1	1647	889	764
20	2641	1555	1273

The impact metric in these analyses is "heat flux" expressed as kilowatts per square meters (kW/m^2). Heat flux is thermal radiation intensity, the measure used in the DEIR to determine the resulting injury to exposed parties. DEIR, Table 4.7.2. The DEIR states that it "assumed that all persons exposed to 10 kW/m^2 would suffer serious injuries. Serious injuries would start to be realized at and above 5 kW/m^2... Exposure to thermal radiation levels in excess of 10 kW/m^2 would likely begin to generate fatalities in less than 1 minute. All persons exposed to thermal radiation within the flame area were assumed to suffer fatalities regardless of exposure duration." DEIR, p. 4.7-19. See also DEIR Table 4.7-4. The three heat flux criteria reported in Table -- were selected by the DEIR preparers to evaluate the significance of accident scenarios.

Any population located between the accident site up to the reported impact distance, e.g., as far away as 2,641 feet in Table 3, would experience significant impacts. At a heat flux of 5 kW/m^2, 10% injury would be experienced in the exposed population up to 2,641 feet from the accident if the wind were blowing at 20 m/s during the accident. Up to 1,555 feet from the accident, 100% of the exposed population would be injured, including second-degree burns in 14 seconds and 10% fatality at 60 seconds. And up to 1,273 feet from the accident, significant fatalities would occur.

A pipeline accident could occur anywhere along the pipeline route, but would most likely occur at the tank farm, where the crude oil is transferred into tankage. Assuming a pipeline accident at the tank farm under calm wind conditions (1 m/s or about 2 mi/hr), significant impacts would occur up to 1,647 feet from the accident site. The impacted area includes an industrial area 425 feet northeast of the tank farm and a residence within the industrial area at 1,200 feet. DEIR, p. 4.7-37. At a wind speed of 20 m/s (about 45 mi/hr), all persons up to 2,641 feet away would be seriously impacted and within a radius of 1,273 feet from the accident site, they would all be killed. CBE-64

Thus, clearly, a pipeline accident involving the new crude slate has the potential to result in significant off-site (as well as even more significant on-site worker) impacts that were incorrectly described in the DEIR. The actual modeling indicates that off-site parties would be killed. This is a significant impact.

4. <u>On-Site Train Accidents Are Significant</u>

The DEIR also included on-site crude rail car accidents resulting in both pool fires and Boiling Liquid Expanding Vapor Explosions or "BLEVEs" for wind speeds ranging from 1 m/s to 20 m/s. DEIR, Appx. H. The DEIR asserts, based on these analyses buried in Appendix H, that "potential hazards associated with the unloading facility are considered less than significant" and "[h]azards associated with the onsite portion of the Rail Spur Project would be *less than significant (Class III*")." DEIR, pp. 4.7-57/58 (emphasis in original). No significance thresholds are articulated to support these conclusions nor is any explanation provided to explain the basis for the DEIR's conclusion. CBE-65

However, independent analyses based on the railcar accident modeling in Appendix H coupled with significance levels scattered about in the DEIR indicates that the risks from train accidents within the Refinery boundary result in significant on-site and off-site impacts for both pool fires and BLEVEs.

a. Pool Fires

The DEIR analyzes pool fires resulting from a crude railcar accident in which 54,476 barrels of crude (i.e., the entire contents of a unit train) are released for wind speeds ranging from 1 m/s to 20 m/s (2 mi/hr to 45 mi/hr). DEIR, pp. H-2 to H-9. These analyses report "heat flux" in kW/m^2 as a function of distance from the release, for distances of 100 to 1,000 meters (328 to 3,281 feet). An accident could occur anywhere

within the Refinery boundary shown on Figure 2-1. The results of the DEIR's railcar pool fire analyses are buried in Appendix H in a format not accessible to the average reviewer. Thus, they are summarized in Table 4.

Table 4
Summary of Crude Railcar Accident Analysis of Pool Fires
(DEIR, Appx. H)

Heat Flux (kW/m2) =	5	10	12.5
Wind Speed (m/s)	**Impact Distance (ft)**		
1	775	407	331
5	876	495	410
10	928	541	446
20	1404	958	810

The interpretation of these data (and other similar data extracted from Appendix H and summarized in these comments) requires a map that shows the location of potentially exposed populations relative to the accident sites (anywhere along the rail line within the Refinery boundary). It is common to include such a map in an EIR to locate the sensitive receptors. However, the DEIR fails to include a sensitive receptor map and is thus deficient. The boundaries of the Refinery are shown in DEIR Fig. 2-1. This figure and Google Earth maps indicate that the northeastern boundary of the Refinery at roughly the elbow of Highway 1, where the Southern Pacific rail line enters the Refinery, abuts industrial and residential property to the east and north and recreational areas in the Coastal Zone to the west. Sensitive receptors are located in these areas, for example, residences along Monadella Street and in areas to the north and south of Highway 1 (Willow Road) and users of the Oceano Dunes State Vehicular Recreation Area and Oso Flaco Lake and Dunes to the west. CBE-65

The results of the railcar accident modeling summarized in Table 4 indicate that both on-site and off-site impacts are significant. When the wind speed is 20 m/s (45 mi/hr), the heat flux is 5 kW/m^2 at up to 1,404 feet from the accident site and 12.5 kW/m^2 up to 810 feet from the accident site. A comparison of Figures 2-1 and 2-4 indicates that if the accident occurred near the junction of Willow Road and U.S. 1, off-site sensitive receptors would be located within 1,404 feet of the accident site. Thus, significant off-site impacts would occur from an accident within the Refinery boundary.

Further, refinery workers would be present throughout the Refinery and at the unloading facility. These workers would be the most highly exposed populations and would experience significant mortality.

Thus, railcar accidents within the Refinery boundary would result in significant impacts to both on-site and off-site populations. These were not disclosed in the DEIR, but rather buried in a maze of tables that are not explained or analyzed.

b. BLEVES

The DEIR also evaluated the radiant heat exposure and explosion over pressures resulting from a railcar accident involving a Boiling Liquid Expanding Vapor Explosion or "BLEVEs." However, the DEIR fails to discuss the results of this analysis, which is buried in DEIR Appendix H in a format not accessible to the average reviewer. Thus, they are summarized in Table 5.

Heat flux for the BLEVE analysis is reported in the DEIR in units of kilojoules per square meter (kJ/m^2), which is just another measure of heat density, similar to kW/m^2 used to evaluate pool fires, but just expressed in different units. The DEIR explains that at a heat density (or radiation dosage) of 40 kJ/m^2, 10% injury will result, at 150 kJ/m^2, 100% injury will result, and at 250 kJ/m^2, 1% fatalities will occur. DEIR, Table 4.7.4.

Table 5
Results of Radiation Exposure Analysis
from Railcar Accident BLEVE
(DEIR, p. H-13)

Impact Distance (ft)	Radiant Heat Significance Threshold (kJ/m2)
1,690	40
1,194	80
1,066	100
859	150
830	160
643	250

CBE-65

Table 5 shows that significant impacts, 20% injury, will occur at up to 1,690 feet from the accident site. As discussed above, if the accident occurs near the vicinity of the intersection of Highway 1 and Willow Road, within the Refinery boundary, significant impacts will result outside of the Refinery, in industrial/residential areas to the east and in the Coastal Zone areas to the west. Further, workers within 1,690 feet of the accident would also experience significant impacts, and those within 643 feet of the accident may die. These are significant impacts that were not disclosed in the DEIR.

5. <u>Offsite Impacts From Train Accidents Are Significant</u>

The DEIR also evaluated train accident impacts outside of the Refinery, within San Luis Obispo County (SLOC). The DEIR asserts this analysis was prepared following guidelines of the American Institute of Chemical Engineers, Center for Chemical Process Safety (CCPS, 1995) and the parameters discussed in DEIR Section 4.7.1.3. DEIR, p. 4.7-61. However, this analysis does not follow the CCPS method; it uses the wrong significance thresholds; it fails to discuss or analyze in any fashion the factors that

actually affect rail accidents; it is totally unsupported; it fails to analyze the most significant impacts, which occur outside of San Luis Obispo County; it is based on outdated information; and it ignores most impacts caused by rail accidents, including the impacts of spilled crude oils to water, land, and biological resources and public health impacts from exposure to toxic fumes and smoke. Each of these issues is discussed below.

a. Significance Threshold

The San Luis Obispo County Initial Study Checklist defines significant risk if the project will "result in a risk of explosion or release of hazardous substances," or "create any other health hazard or potential impact." Rather than use this definition of significant risk, the DEIR sets it aside and adopts a probability-based risk profile curve approach from Santa Barbara County to evaluate risks associated with crude oil unit train transportation. DEIR, p. 4.7-55, Table 4.7.12, Fig. 4.7-5.

This method minimizes the significance of many potential injuries and deaths by assigning probabilities that a certain number of injuries or deaths will occur, based on statistics that do not capture the proposed increase in rail traffic. Under the San Luis Obispo definition, the mere "risk" of an explosion, a release of crude oil, any health hazard or any potential impact is significant. Thus, as there is ample evidence that spectacular accidents involving crude-carrying unit trains with well documented property damage and death have recently occurred, train accidents are per se significant. CBE-65

The complex (and unsupported) probability-based risk profile method used in the DEIR seeks to downplay the very well documented significant consequences of accidents involving unit train accidents carrying crude oils. These accidents will happen, they will result in significant impacts, and the DEIR should focus on minimizing their occurrence, rather than burying the fact that they do occur in a maze of unsupported and incoherent probability analysis. Further, the DEIR's analysis is based on very out of data information that does not consider recent history.

b. The DEIR Fails To Acknowledge Recent History

The DEIR's analysis is based on outdated accident statistics, from CCSP (1995), published long before the recent surge in the transport of crude oil by rail. Recent history indicates that the accidents involving unit trains carrying crude oil have sky-rocketed. They also demonstrate the unique set of challenges posed by highly flammable materials, such as Bakken crudes, transported in unsafe tanker cars configured in unit trains that are "virtual pipelines" of highly flammable material, which now dominate the industry. Risks are compounded when highly flammable material, such as Bakken crudes, are shipped in large amounts.[68]

[68] National Transportation Safety Board, Safety Recommendation R-14-4 to -6, January 21, 2014, Available at: http://www.ntsb.gov/doclib/recletters/2014/R-14-004-006.pdf.

Historically, most crude oil has been transported in pipelines. However, in places like North Dakota and Canada that have seen huge recent increases in crude oil production, the existing crude oil pipeline network lacks capacity to handle the higher volumes being produced. Pipelines also lack the operational flexibility and geographic reach to serve many potential markets, especially the west coast. Railroads, though, have capacity, flexibility, and reach to fill the gap.

Small amounts of crude oil have long been transported by rail, but since 2009 the increase in rail crude oil movements has been enormous. In the United States, crude oil shipments have increased from 10,800 car loads in 2009 to about 400,000 in 2013. In Canada, shipments of crude oil by rail increased from a mere 500 car loads in 2009 to 160,000 car loads in 2013.[69] Continued large increases are expected in 2014. Crude oil accounted for 0.8 percent of total Class I carload originations for all of 2012, 1.1 percent in the fourth quarter of 2012, and 1.4 percent in the first quarter of 2013. It was just 0.03 percent in 2008.[70]

This recent rise in crude transportation by rail has resulted in soaring numbers of crude oil releases to the environment in the form of both accidents and "non-accident" releases such as leaks. The Pipeline and Hazardous Materials Safety Administration (PHMSA) incident records underscore these growing risks. The number of incidents involving crude oil transportation by rail are as follows: CBE-65

- 2009: 0
- 2010: 9
- 2011: 34
- 2012: 86
- 2013: 85 (partial)[71]

Similar statistics were published by the Wall Street Journal, based on data generated by the Association of American Railroads ("AAR"):[72]

[69] TSBC, Rail Safety Recommendations, January 23, 2014, Available at: http://www.tsb.gc.ca/eng/recommandations-recommendations/rail/2014/rec-r1401-r1403.pdf.

[70] American Association of Railroads, "Moving Crude Petroleum by Rail," https://www.aar.org/keyissues/Documents/Background-Papers/Crude-oil-by-rail.pdf; May 2013, at 3-5.

[71] Data derived from PHMSA incident reports - http://www.phmsa.dot.gov/hazmat/library/data-stats/incidents.

[72] The Wall Street Journal, "Officials Tighten Crude-Shipping Standards," http://online.wsj.com/news/articles/SB10001424127887323838204578654463632065372; August. 7, 2013. (Also included as Attachment 3.)

Figure 6
Industry shipment and incident reports

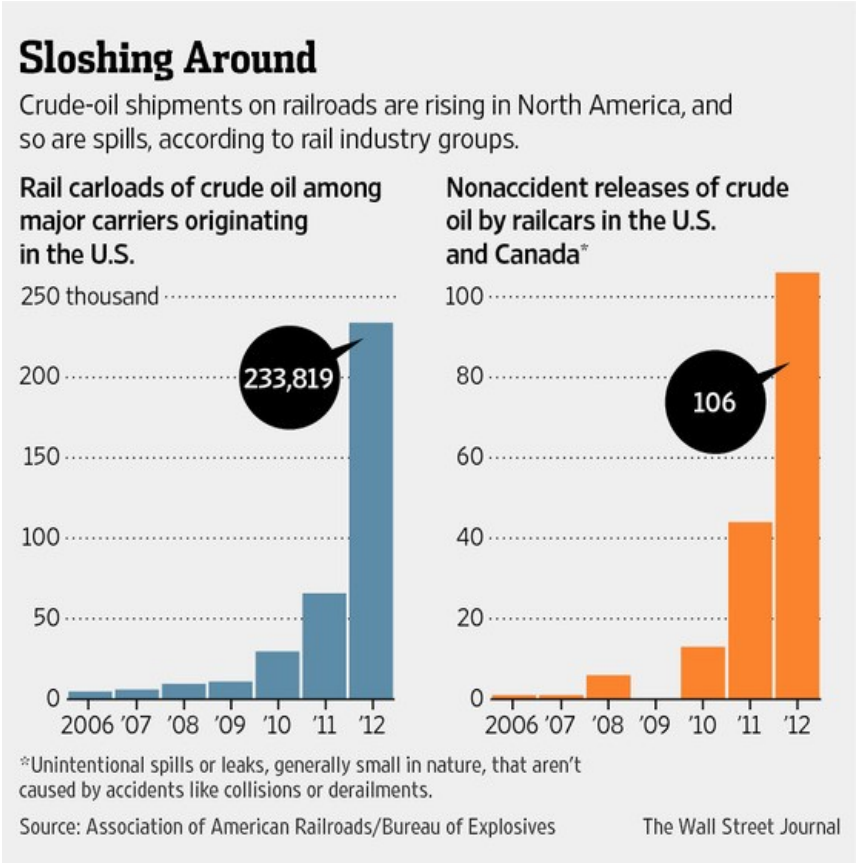

CBE-65

An article in the January 21, 2014 Contra Costa Times, which serves one of the areas through which the Project's unit trains would pass, similarly explains that more crude oil was spilled in U.S. rail accidents in 2013 than in the nearly four decades since the federal government began collecting data on such spills. More than 1.15 million gallons of crude oil was spilled from rail cars in 2013 alone. By comparison, U.S. railroads spilled a combined 800,000 gallons of crude oil between 1975 and 2012.[73] These data do not include Canada, where more than 1.5 million gallons of crude oil were spilled in the Lac- Mégantic, Quebec accident on July 6, 2013, when a runaway train derailed, exploded, and killed 47 people. The cargo was Bakken crude from North Dakota.

The subject unit trains are "virtual pipelines" that pass through heavily populated residential areas. When such large volumes of flammable crude oil are on a single train involved in an accident, as seen in the Lac-Mégantic accident described below, they explode in spectacular fireballs. The resulting accidents can cause major loss of life, property damage, and environmental consequences. The sharp increase in crude oil rail

[73] Curtis Tate, Data: Oil Spills from Rail Cars Massive, Contra Costa Times, January 21, 2014.

shipments has significantly increased safety risks to the public.[74] Crude oil is problematic when released because it is flammable, especially Bakken crude. The risk is compounded because it is commonly shipped in large amounts. These increased risks have not been evaluated in the DEIR.

Unfortunately, the surge of incidents and releases has not been matched by an increase in the resources available to responders and regulators, pointing to the need for mitigation. The DEIR fails to address the lack of adequate resources anywhere along the rail route, even in SLOC, to address the type of catastrophic accident that is likely to occur. Example of some recent accidents follow.

1. Lac-Mégantic

CBE-65

On July 5, 2013, a train hauling 72 DOT-111 tanker cars loaded with 2.0 million gallons of crude from the Bakken shale oil field in North Dakota, one of the crudes proposed to be imported by the Rail Spur Project, slammed into Lac-Mégantic, a town of 6,000 located in Quebec. Owned by an American company – Montreal, Maine and Atlantic Railway – the train had only a single staffer, who abandoned the train in order to sleep in a motel before a replacement crew arrived to complete the train's journey to an oil refinery on Canada's east coast. The brakes on the five-locomotive train malfunctioned, and it began a seven-mile roll toward the small town. Reaching a speed in excess of 60 mi/hr, the train reached a bend in the tracks, derailing and dumping 1.5 million gallons of Bakken crude, which caught fire and incinerated dozens of buildings. Forty-seven people were killed. About 1.6 million gallons of Bakken crude oil were released, covering an area of 77 acres. Oil spilled into the Chaudière River and was transported as far as 74 miles away.[75] While this accident occurred in Canada, the freight railroad operating environment in Canada is similar to that in the United States.

[74] Association of American Railroads, Bureau of Explosives, Annual Report of Hazardous Materials Transported by Rail, BOE 12-1, 2013.

[75] NTSB, Safety Recommendation In reply refer to: R-14-4 through -6; January 21, 2014. Available at: http://www.ntsb.gov/doclib/recletters/2014/R-14-004-006.pdf.

Figure 7
Post-Accident Aerial Photo of Lac-Megantic (Reuters)

The DOT-111 tanker cars involved in this accident are the same ones that the DEIR suggests will be used to import this very same crude, but notes that "nearly 25 percent of the DOT-111 fleet carrying crude today meets the higher design standards..." DEIR, p. 4.7-15. Will the DEIR's tank car fleet be within the 25% safe or the 75% unsafe DOT-111 fleet? CBE-65

The DEIR pretends to analyze a similar accident within SLOC, but amazingly, fails to find any significant impacts by using probabilistic methods. However, regardless of the estimated probability, when an accident occurs, the resulting impacts are highly significant. Further information regarding the Lac-Mégantic accident is provided in Attachment 2, "Analysis of the Potential Costs of Accidents/Spills Related to Crude by Rail."[76] This analysis demonstrates that the costs of crude-by-rail accidents/spills can be very large, and that a major unit train accident/spill could cost $1 billion or more for a single event. Such accidents are per se significant and must be addressed and mitigated in the DEIR.

As explained in Attachment 2, the Lac-Mégantic rail accident/spill will likely have costs on the order of $500 million to $1 billion excluding any civil or criminal damages. Costs/damages for a similar incident could have been substantially higher had it occurred in a more populated area, such as the San Francisco Bay Area or Los Angeles, areas through which the Project's similarly configured and loaded unit trains will pass. Lac-Mégantic is also relevant in that it shows how an accident involving highly flammable light crude (such as the Bakken crude) can have devastating

[76] This analysis was prepared by The Goodman Group, Ltd, a consulting firm specializing in energy and regulatory economics, on behalf of Oil Change International.

consequences even in a small town in terms of loss of human life and widespread explosion and fire damage to surrounding property. The DEIR failed to recognize this demonstrated significant impact, instead dismissing it with unsupported probability analyses.

2. Marshall, Michigan

Attachment 2 also analyzes the spill of tar sands DilBit from Enbridge's Line 6B in Marshall, Michigan: This rupture in 2010 had costs of about $1 billion for Enbridge. The spill volumes at Marshall (840,000 gallons) were within the range of the amount of spill possible for ~~this Project (and, in fact, subst~~antially less than the maximum spill) if a crude by rail unit train released much of its cargo. Costs/damages for similar incidents within California could be substantially higher if it occurred in a more populated area, such as the Bay Area or Los Angeles. Marshall is also relevant in showing the high potential cost of dilbit spills into water (and rail lines are often very close to water, e.g., along the Sacramento River and within the Sacramento-San Joaquin Delta, the water supply for most of California's agriculture and drinking water). CBE-65

3. Alabama

On November 8, 2013, a 90-car unit train carrying 2.7 million gallons of Bakken crude oil in DOT-11 tank cars derailed and exploded in a rural wetland in western Alabama, spilling crude oil into the surrounding wetlands and igniting a fire that burned for several days.[77] No injuries resulted from the accident, but a similar accident in a more populated location would certainly have caused serious risk to public safety.

[77] Karlamangla, Soumya, "Train in Alabama oil spill was carrying 2.7 million gallons of crude." Los Angeles Times, http://articles.latimes.com/2013/nov/09/nation/la-na-nn-train-crash-alabama-oil-20131109, November 9, 2013.

Figure 8
Aerial photo of Alabama derailment and explosion (Reuters)

CBE-65

4. Casselton, North Dakota

On December 30, 2013, a similar explosion occurred in Casselton, North Dakota, causing a fiery accident resulting in the town being evacuated. The BNSF train was more than 100 cars, all DOT-111, and about a mile long, of which at least 10 cars were destroyed.[78] Several of the DOT-111 tank cars ruptured and released crude oil that ignited. The post-accident fire destroyed two locomotives and thermally damaged several additional tank cars causing violent, fiery eruptions. Dense, toxic smoke forced a temporary evacuation of the town. Apparently, another train carrying grain derailed first, causing the adjacent Bakken oil filled cars to derail,[79] thus highlighting the hazards associated with multiple trains using the same or adjacent tracks, as proposed by the Rail Spur Project. The coastal line, for example, carries passenger traffic along the Pacific coast. Thus, human life could be put at risk, rather than just a train carrying grain.

5. New Brunswick, Canada

On January 7, 2014, 17 cars in a 122-unit train derailed and exploded near Plaster Rock, New Brunswick. No one was injured, but about 150 people were evacuated. The petroleum products originated in Western Canada and were destined for the Irving Oil Refinery in St. John.[80]

[78] DOT-111 Tank Car, Wikipedia.
[79] NTSB, Staff Recommendation R-14-01 - 03, January 23, 2014.
[80] DOT-111 Tank Car, Wikipedia.

c. The DEIR Fails To Evaluate Crude By Rail As A Security Risk

The explosions in Lac-Mégantic and Alabama were accidents, but they could easily have been created by terrorists. The fact that terrorists haven't yet targeted rail tank cars carrying crude oil doesn't mean it won't occur in the future. The recent Canadian accidents demonstrate the amount of death and destruction that can happen if a rail tank car overturns. Terrorists will have read about these accidents. Without any additional security precautions, crude oil tank cars will be seen as a soft target for an attack, particularly, since they are often manned by small crews and often left unattended. CBE-66

d. Off-Site Train Accident Analysis Unsupported

The results of the off-site train accident analysis appears full blown in Table 4.7-12 for a 72.6 mile segment of rail line from Highway 101 to Nipomo, broken into small segments. This table is apparently the basis of Figure 4.7-5, which presents the frequency of injuries and fatalities as a function of the number of each. Both of these summary results are presented with no supporting analysis, equations, citations, or explanatory material. Table 4.7-12 is also presented in Appendix H at H-19 and H-20, again with no supporting analysis, equation, citations, or explanatory material.

The DEIR asserts this analysis was prepared following guidelines of the American Institute of Chemical Engineers, Center for Chemical Process Safety (CCPS, 1995) and the parameters discussed in DEIR Section 4.7.1.3. DEIR, p. 4.7-61. However, I am very familiar with these guidelines and have used them in many similar analyses. I cannot follow or verify the risk analyses in DEIR Sec. 4.7. The following bulleted items list the columns in Table 4.7.12 and their support or lack thereof based on my review of the DEIR: CBE-67

- Accident Probability (year): **no support**
- Probability Density: Table 4.7.6 ("default population densities")
- # of Trains per year: DEIR, pp. ES-3, 1-4
- Ignition: All Spill Probability (per year): **no support**
- Ignition: Small Spill Probability (per year): **no support**
- Ignition: Large Spill Probability (per year): **no support**
- No Ignition: All Spill Probability (per year): **no support**
- No Ignition: Small Spill Probability (per year): **no support**
- No Ignition: Large Spill Probability (per year): **no support**

The calculations and inputs to arrive at Table 4.7.12 are many and complex and MUST be included in an appendix to the DEIR, to the same level of detail as Appendix B

for air emission calculations. The methods and inputs include, for example, the following types of standard calculations and inputs, none of which are disclosed in the DEIR:

> To evaluate whether a train accident is significant, one must estimate two numbers: 1) the probability that a consequence (e.g., injury or fatality) will occur from the accident and 2) the number of individuals that will be affected.
>
> These two numbers are usually calculated using standard procedures described in the Guidelines for Chemical Transportation Risk Analysis (CCPS, 1995). The first number, the probability that an incident outcome (i.e., a fatality or injury) will occur is given by:
>
> $$F_{g,i,k} = T \cdot A \cdot R_i \cdot L_g \cdot P_{i,k} \qquad (1)$$
>
> where:
>
> $F_{g,i,k}$ = frequency of incident outcome *k* for release size *i* on segment *g*
> T = trips per year
> A = accident rate per mile
> R_i = release probability for release size *i*
> L_g = length of segment *g* in miles
> $P_{i,k}$ = probability of incident outcome *k* for release size *i*
> *g* = segment counter
> *i* = release size counter
> *k* = incident outcome counter
>
> The second number, the associated consequences or number of persons exposed, is given by:
>
> $$N_{g,i,k} = CA_{i,k} \cdot PD_g \cdot PF_{i,k} \qquad (2)$$
>
> where:
>
> $N_{g,i,k}$ = number of fatalities (or injuries) for incident outcome *k* for release size *i* on segment *g*
> $CA_{I,k}$ = consequence area associated with incident outcome *k* for release size *i*
> PD_g = population density for segment *g*
> $PF_{I,k}$ = probability of injury/fatality for incident outcome *k* for release size *i*
> *g* = segment counter
> *i* = release size counter
> *k* = incident outcome counter

CBE-67

Without the type of information used in the above equations, the DEIR's train accident analysis is wholly unsupported. The DEIR must be revised to reveal and support all of the input assumptions represented by the variables used in these equations. The revised DEIR must be recirculated.

The unsupported information in Table 4.7.12 was then used to create injury and fatality risk charts that plot the frequency of accidents per year versus the number of injuries and fatalities in Figure 4.7-5. These are compared with Santa Barbara risk thresholds. There is no explanation for how the unsupported probability data from Table 4.7.6 was used to generate these risk curves. A complex series of calculations and various assumptions are typically involved, but none of these were disclosed in the DEIR,

preventing public review. The DEIR must be expanded to support this analysis and recirculated to give the public an opportunity for input. CBE-67

e. Entire Route In California Not Analyzed

The train accident analysis fails to analyze the risk of accident along the entire route within California, but rather stops at the northern San Luis Obispo County border and assumes no trains arrive or depart from the south. The DEIR indicates that unit trains will travel 68 miles[81] one-way within San Luis Obispo County and an additional 390 miles one-way outside of the County. DEIR, p. 4.3-42. Thus, the DEIR only analyzed the risk of train accidents for 17% of the route. This significantly understates the risk and consequences of train accidents as the County is sparsely populated. The projected rail route passes through some of the most densely populated areas with some of the most valuable real estate in the United States.

The DEIR fails to include a map that shows the route(s) that Project trains would follow. However, it does disclose that Union Pacific would be the carrier and includes a map of Union Pacific rail lines in California. DEIR, Fig. 4.12-2. This map indicates that trains may pass through some of the most densely populated areas in the United States, exposing some of the most sensitive and vulnerable public resources to significant adverse impacts.

The DEIR suggests that unit trains would most likely enter the northern part of the state, follow the rail line along the Sacramento River to Roseville, through Sacramento, Oakland, Santa Clara, San Jose, and down the coastal line to the Refinery. DEIR, p. 4.12-7 & Fig. 4.12-2. However, elsewhere, the DEIR indicates that trains could arrive from the north or the south (DEIR, p. 2-21), thus also passing through the densely populated Los Angeles area. CBE-68

Unit trains approaching from the north would parallel the water supply for most of California, the Sacramento River and the Sacramento-San Joaquin Delta, and pass through some of the most densely populated areas and most valuable real estate in the world in the San Francisco Bay Area and Silicon Valley. An accident on the Mulford line between Santa Clara and Oakland or in San Jose, for example, which the DEIR indicates would be used (DEIR, p. 4.12-7), could have catastrophic effects on infrastructure, workers, and residents. As discussed elsewhere, the DEIR should have considered an alternate route, down the eastern side of the Central Valley, with a new connecting rail spur from Bakersfield to the Refinery, to avoid these significant impacts.

The federal preemption arguments in the DEIR do not prevent the County from requiring mitigation for significant impacts that occur on private land. Further, there is no preemption of the County's authority to refuse to issue a land use permit if Phillips 66 does not mitigate significant impacts that occur anywhere within California.

[81] Elsewhere, the DEIR reports 72.6 miles within SLOC. DEIR, Table 4.7-12.

f. Track and Rail Car Condition Not Addressed

Unit trains loaded with up to 2.2 million gallons of crude oil (DEIR, p. 2-21) will travel one way over about 460 miles of rail line within California nearly every day. DEIR, p. 4.3-42. These trains can weigh up to 15,000 tons and extend for well over a mile. Rail accidents are the result of either an error on the part of the railroad operating personnel or a technical failure in the track, tank car design, and train control equipment. DEIR, p. 4.7-25, CCSP 1995, p. 64. The latter two can be anticipated and mitigated. The primary contributing factors to rail accidents that could have and should have been evaluated in the DEIR are track conditions, train speed, and railcar design.

Derailment rates are high on low class track and reduce rapidly as track quality improves. Broken rail is the factor most likely to pose the greatest risk to train operations as accidents due to broken rails are more frequent and more severe than average. They have been the cause of major derailments involving dangerous goods in both the U.S. and Canada.[82]

The DEIR made no attempt to assess track quality for the mainline route within California that would be used by unit trains. Rather, it dismisses the issue by stating that: "[m]ainline track is generally Class 5 or 6..." DEIR, p. 4.7-25. "Generally"? Is this true, especially along sections currently with light unit train traffic, such as coastal line? The DEIR is silent on track condition, which is a serious oversight. A survey could have and should have been conducted as an input to the risk of upset analysis and to evaluate alternate routes to mitigate impacts. CBE-69

The severity and consequences of a derailment are related to speed because the energy dissipated during a derailment depends on the kinetic energy of the train, thus its speed and mass. Federal Railroad Administration data for mainline freight trains shows the number of cars derailed, an indicator of accident severity, is highly correlated with speed. Thus, speed reduction has the potential to reduce the severity and consequences of derailments.[83] The DEIR did not consider speed reduction.

Another key factor that affects both the probability and consequences of train accidents is the design and condition of the tank cars. CCSP 1995. The DEIR suggests that DOT-111 rail cars would be used. However, while the DEIR recognizes safety issues with these cars (see, e.g., p. 4.7-17, and 4.7-25) and explicitly recognizes that only about 25% of the current fleet has been upgraded to NTSB standards, it does not consider these flaws in its analyses and does nothing to assure that the Project will use the safest cars available that meet the most current safety standards. DEIR, p. 4.7-25. The DEIR

[82] Transportation Safety Board of Canada, Rail Recommendations R14-01, R14-02, R14-03, January 23, 2014, Available at: http://www.tsb.gc.ca/eng/recommandations-recommendations/rail/2014/rec-r1401-r1403.asp#appx-a.

[83] C.P.L. Barkan, C.T. Dick and R. Anderson, Analysis of Railroad Derailment Factors Affecting Hazardous Materials Transportation Risk, Transportation Research Board Annual Meeting, 2003.

does not require any specific railcars nor safety standards for the rail cars that would be used in Project unit trains.

This is a serious flaw as it is widely acknowledged that the existing fleet of DOT-111 tank cars is unsafe for transporting crude oil or other hazardous materials. There are about 228,000 Class 111 tank cars currently in service in North America. Among many other deficiencies, the head and shells of DOT-111s are paper thin, and they lack many other vital safety features, such as head shields and protection for top fittings. As explained by the Transportation Safety Board of Canada (TSBC): "Many Class 111 tank cars do not have top fitting protection, head shields or thermal protection, and are not jacketed. The sides and heads of these tank cars are typically constructed with 7/16-inch-thick steel plate, which is thinner than some other classes of tank cars. When involved in accidents, these Class 111 tank cars are vulnerable to head and shell damage due to impacts, as well as fitting damage, which can result in the release of product. Furthermore, without thermal protection, additional product can be released through excessive venting of the safety relief device(s), or worse, through a thermal tear, which can result in complete product loss."[84]

Figure 9
Class 111 Tank Cars
Assumed in DEIR to Transport Crude (TSBC)

CBE-69

Rail tank cars should be able to withstand "rollover" accidents. But when pre-2011 DOT-111s are involved in accidents, even at low speeds, almost all of the tank cars rupture and release their contents. This was documented by the National Transportation Safety Board ("NTSB") in its "Cherry Valley accident report," cited in the Advanced Notice of Proposed Rulemaking for Hazardous Materials: Rail Petitions and Recommendations to Improve the Safety of Railroad Tank Car Transportation.[85] In that

[84] Transportation Safety Board of Canada, Rail Recommendation R14-01, R14-02, R14-03, January 23, 2014, Available at: http://www.tsb.gc.ca/eng/recommandations-recommendations/rail/2014/rec-r1401-r1403.asp.

[85] PHMSA-2012-0082 (HM-251), 78 FR 54,849 (Sept. 6, 2013).

low-speed accident (36 mph), 13 of 15 tank cars ruptured. The NTSB noted that similar disastrous failure rates had been observed in other accidents (New Brighton, PA – 12 of 23 cars were breached; Arcadia, OH – 28 of 32 were breached).

The Cenovus Material Safety Data Sheet (MSDS) for Bakken crudes rates its flammability at Level 4, which is the highest rating, the same as for methane and propane gases. Under Canadian regulations, propane must be carried in DOT-112 or DOT-114 tank cars, but not in the U.S. Thus, while the use of DOT-111 tank cars would be illegal in Canada, they could be used in the U.S. where Bakken crudes originates[86] and appear to be approved by the DEIR for use on this Project. After the Lac- Mégantic accident in Canada, the Canadian government proposed to reclassify crude oil as a highly hazardous material, upgrading its classification from flammable and non-explosive.[87] The DEIR is seriously deficient for failing to call out this significant risk, the use of unsafe railcars to import highly flammable Bakken crudes through densely populated areas to the Refinery in "virtual pipelines". This is reckless. CBE-69

C. Mitigation Is Inadequate

The DEIR does not impose any mitigation for accidents involving the import and storage of a new crude slate as it alleges there are no significant impacts. (Crossbucks will be installed at all railroad spur crossing with the Refinery. DEIR, p. IST-37.) However, as I demonstrate above, this conclusion is wrong. The import of a new slate of crudes by rail will result in many significant impacts. These must be mitigated. The following sections discuss some of the mitigation measures that I recommend. CBE-70

Notably, on January 23, 2014, the National Transportation Safety Board (NTSB)[88] issued a series of recommendations to the Department of Transportation to address the safety risk of transporting crude oil by rail.[89] In an unprecedented move, the NTSB issued these recommendation in coordination with the Transportation Safety Board of Canada. [90] These recommendations include tougher standards for all Classs-111

---

[86] DOT-111 Tank Car, Wikipedia.

[87] Canada Orders Reinforced Fuel Trains After Disaster, January 10, 2014, Available at: http://crooksandliars.com/2014/01/canada-orders-reinforced-fuel-trains-after.

[88] NTSB Calls for Tougher Standards on Trains Carrying Crude Oil, January 23, 2014, Available at: http://www.ntsb.gov/news/2014/140123.html; FuelFix, Wreck Investigators Urge Tighter Rules for Oil Trains, January 23, 2014, Available at: http://fuelfix.com/blog/2014/01/23/rail-wreck-investigators-urge-tighter-rules-for-oil-trains/; The Globe and Mail, Canadian and U.S. Safety Watchdogs Warn of Oil-by-Rail's Risks in Push for Tighter Rules, January 23, 2014, Available at: http://www.theglobeandmail.com/news/politics/new-federal-rail-safety-proposal-to-tighten-scrutiny-of-crude-shipments/article16461771/#dashboard/follows/.

[89] NTSF, Safety Recommendation Letter R-14-001-003, January 23, 2014, Available at: http://www.ntsb.gov/doclib/recletters/2014/R-14-001-003.pdf and NTSB Safety Recommendation Letter R-14-004-006, January 21, 2014, Available at: http://www.ntsb.gov/doclib/recletters/2014/R-14-004-006.pdf.

[90] TSB and NTSB Call on Canadian and U.S. Regulators to Improve the Safe Transportation of Crude by Rail, Available at: http://www.tsb.gc.ca/eng/medias-media/communiques/rail/2014/r13d0054-

tank cars, not just new ones; strategic route planning; and emergency response assistance plans along routes where large volume of liquid hydrocarbons are shipped. All of these recommendations should be included as mitigation for the Rail Spur Project. CBE-70

1. Community Emergency Preparedness Response

When a crude oil spill occurs, local response assets are generally the first ones on scene. These assets will include those provided by police departments, fire fighters, and emergency managers. Many times however, these response individuals are unaware of the nature of, and the threat posed by the materials that are being transported through their communities.

The public services and utilities section of the DEIR (Sec. 4.11), does not address how a local train accident would be handled. The DEIR concedes elsewhere that "In the unlikely event of an oil spill along the UPRR mainline tracks, there would likely be no oil spill containment or cleanup equipment available, and it would likely take some time for emergency response teams to mobilize adequate spill response equipment. Depending upon the location of the spill this could allow enough time for the spill to impact sensitive habitat and plants and animal species." DEIR, p. ES-7. Elsewhere the DEIR admits that "[o]peration of the Rail Spur Project could increase demand for fire protection and emergency response services." DEIR, pp. ES-9.

The only mitigation proposed for these deficiencies is implementation of a "Fire Protection Plan, Emergency Response Plan, Spill Prevention Control and Countermeasure Plan, training requirement for CALFIRE and the SMR fire brigade" within the Refinery. DEIR, pp. ES-9, IST-33. This is not adequate to address accidents along the 458 miles of track within California as it effectively places the burden of remediating the environmental consequences of an accident on local communities along the route. The DEIR failed to evaluate any alternatives to this do-nothing approach. The applicant could require its carrier to develop a comprehensive plan to ensure the availability of necessary response resources, including identifying and contracting the personnel and equipment necessary to respond to accidents along the route. CBE-71

Congress, recognizing a gap in communication, mandated in the "9/11 Act"[91] that rail companies transporting security sensitive materials, including toxic-by-inhalation materials, but not including crude oil, improve communication with local officials. Rail carriers are now required to identify a point of contact and to provide information to (1) state and/or regional "Fusion Centers" that have been established to coordinate with state, local and tribal officials on security issues and which are located within the area encompassed by the rail carrier's rail system; and (2) state, local, and tribal officials in jurisdictions that may be affected by a rail carrier's routing decisions

20140123.asp; See also: Rail Recommendations R14-01, R14-02, R14-03 at http://www.tsb.gc.ca/eng/recommandations-recommendations/rail/2014/rec-r1401-r1403.asp and Backgrounder at http://www.tsb.gc.ca/eng/medias-media/fiches-facts/r13d0054/r13d0054-20140123.asp.

[91] Implementing Recommendations of the 9/11 Commission Act of 2007, Pub. L. 110-53; 121 Stat. 266.

and who directly contact the railroad to discuss routing decisions.[92] This knowledge enables local communities to have a better understanding of what is being transported near their homes and schools.

According to the mandate of the 9/11 Act, rail carriers transporting security sensitive materials are required to select lower-risk routes, based on an analysis of the safety and security risks presented various routes, railroad storage facilities and proximity of high-consequence targets along the route. The results of this analysis could dictate the rerouting of the security sensitive materials to other locations

Crude oil is not currently defined as "security sensitive" so the additional reporting requirement does not apply to rail carriers transporting crude oil, despite its obvious hazards. However, the DEIR should find the subject crudes as "security sensitive" and implement 9/11 Act requirements.

The lack of regulatory guidance on communication about the movement of crude oil via rail with local officials, neighbors and local businesses is inconsistent with the Administration's initiatives goal to improve preparedness. President Obama issued a proclamation on August 30, 2013 stating that September 2013 was National Preparedness Month. In this document, the President also stated that Americans should "refocus our efforts on readying ourselves, our families, our neighborhoods, and our Nation for any crisis we may face." Additionally he directed the Federal Emergency Management Agency to "launch a comprehensive campaign to build and sustain national preparedness with private sector, non-profit, and community leaders and all levels of government."[93] Private sector and community preparedness can't occur if the federal government fails to require the disclosure of information that could help communities become more prepared. CBE-71

The failure to share information also contradicts the mission of the Citizen Corps, a FEMA-managed initiative. Its mission "is to harness the power of every individual through education, training, and volunteer service to make communities safer, stronger, and better prepared to respond to the threats of terrorism, crime, public health issues, and disasters of all kinds." http://www.ready.gov/citizen-corps. Disasters of all kinds include spills created by overturned rail tank cars carrying crude oil.

FEMA released a report on the Citizen Corps in September 2012. In this document entitled "Citizen Corps Councils Registration and Profile Data FY2011 National Report," FEMA Administrator Fugate stated that the Citizen Corps Councils provide '"the table"' for collaboration to "(i)ntegrate whole community representatives with emergency managers to ensure disaster preparedness and response planning represents the whole community and integrates nontraditional resources."[94] Again,

---

[92] http://www.gpo.gov/fdsys/pkg/FR-2008-11-26/html/E8-27826.htm.

[93] http://community.fema.gov/gf2.ti/f/280514/8233733.1/PDF/-/Presidential_Proclamation__National_Preparedness_Month_2013.pdf.

[94] FEMA, "Citizen Corps Councils Registration and Profile Data FY2011 National Report,"

without access to accurate information, the whole community is unable to adequately plan and integrate resources for disaster response and preparedness in line with FEMA objectives.

Finally, the failure to share information also contradicts recommendations provided by former Director of EPA's Office of Emergency Management Deborah Dietrich regarding coordination between the Citizen Corps and Local Emergency Planning Committees (LEPCs). Ms. Dietrich sent an August 2009 letter to all State Emergency Response Commission (SERC) Chairs recommending that all LEPCs work more closely with the Citizen Corps regarding the Emergency Planning and Community Right to Know Act of 1986 (EPCRA). She told them to consider "whether working more closely with the Citizen Corps could make your EPCRA and RMP work more effective."[95] Without basic knowledge about crude oil moving through their communities by rail, these planning committees are unable to accomplish their intended goal. CBE-71

2. Rail Car Design

The DEIR suggests that DOT-111 non-pressurized tank cars would be used. DEIR, p. 4.7-25. However, as documented above, based on recent accidents and various proposed rulemakings, these railcars are known to pose significant risks when used to transport crude oil in unit trains.

Railcars are typically (99%) owned by the refiner, a leasing company, or a midstream producer, rather than the railroads.[96] Thus, there is no pre-emption issue and Phillips 66 has control over its railcars. The County can and should establish standards that the Project's railcars must meet. These standards should include the use of DOT-112 or DOT-114 when transporting Level 4 material such as Bakken and otherwise, the use of DOT-111 built to the most current standards, currently as of October 1, 2011, which include increased head and shell thickness; normalized steel; 1/2-inch thick head shield; and top fitting protection. DEIR, p. 4.7-25. CBE-72

3. Train Staffing

A unit train carrying crude oil can weigh up to 15,000 tons and extend for up to a mile in length. Directing such a vehicle from point of origin to its destination is an inordinately demanding task, especially given the enormous risks involved if a mistake is made. CBE-73

---

https://s3-us-gov-west-1.amazonaws.com/dam-production/uploads/20130726-1854-25045-2121/citizen_corps_councils_final_report_9_27_2012.pdf, September 2012.

[95] Dietrich, Deborah, Letter to SERC Chairpersons, ftp://tbrpc.org/dri/Documents/LEPC/MISCELLANEOUS/EPA's%20EPCRA%20Letter.pdf. August 20, 2009.

[96] AAR, Moving Crude by Rail, May 2013, p. 9.

The range of tasks and responsibilities imposed on train staff includes powering up, maintaining speed (in compliance with ever-changing speed limits, changing grades, and track conditions), constant visual surveillance of the track and traffic control signals, continuously operating the radio, completing required paperwork, and remaining aware of other rail traffic.

Further, FRA rules require that each car in a hazmat train be inspected visually for defects, signs of tampering, and/or the presence of improvised explosive devices. 49 CFR 174.9(b). This could require over a mile of visual tank car inspections, thus requiring a solo staffer to be away from the locomotive for long periods. CBE-73

In the event of derailment, collision, mechanical breakdown, etc, a massive piece of equipment such as a unit train cannot be safely operated by one individual. Redundancy in staffing is required to maintain safe operations. This has been recognized by the Federal Aviation Administration, which requires two pilots for all commercial flights. Crude unit trains should be subject to the same requirement.

Thus, the DEIR should include a condition requiring that Phillips 66 negotiate a contract with UPRR that requires at least two operators on each unit train carrying crude oil.

4. Alternate Route Should Be Required

The DEIR should have analyzed the safety and security risks of alternate transportation routes, including consideration of the crude volumes; track type, class, and maintenance schedule; track grade and curvature; environmentally sensitive or significant areas; population density along the routes; emergency response capability along the routes; passenger traffic along the route(s) (i.e., shared track); railway infrastructure (e.g., signaling, track class, crossings, wayside systems, traffic density); geography; and areas of high consequence as defined in 49 CFR 172.820(c). Based on this analysis, the DEIR should have selected the route posing the least overall safety and security risk.

CBE-74

In particular, the DEIR should have selected a route to prevent catastrophic release or explosion in proximity to densely populated areas, including urban areas and events or venues with large numbers of people in attendance, iconic buildings, landmarks, or environmentally sensitive areas.[97] The route selected in the DEIR (without any analysis or justification at all) violates every tenant of safety analysis. The proposed route passes through some of the most densely populated and environmentally sensitive areas in the world.

The coastal route selected in the DEIR overlaps with passenger routes and passes through some of the most densely populated areas in the United States. The Capitol Corridor line travels between San Jose and Sacramento. The Pacific Surfliner travels along the coast between San Luis Obispo and San Diego. The San Joaquin line runs

[97] 73 FR 20752 (April 16, 2008).

between Bakersfield and the San Francisco Bay Area. The California Zephyr runs between Emeryville and Chicago. The Coast Starlight run between Los Angeles and Chicago. DEIR, Sec. 4.12.

Further, the chosen route passes over 99 bridges and major road crossing in just San Luis Obispo County alone, of which only 33 are grade-separated crossings, where the railroad passes above or below the crossing. DEIR, p. 4.7-28. The DEIR failed to inventory bridges and crossing anywhere else. DEIR, Sec. 4.7 & 4.12. However, there are likely many in densely populated areas that unit trains will pass through. Many of these are likely unseparated and thus would increase the potential for accidents. DEIR, p. 4.7-28. As it could take over an hour for a unit train to pass through any given crossing, massive traffic jams could result in areas like the San Francisco Bay Area, Silicon Valley, and the greater Los Angeles area. The interaction of train traffic and rail traffic was not evaluated in the DEIR. Any increase in congestion due to this Project would be a significant impact that was not analyzed or mitigated.

The 9/11 Act, generally used to argue for safety of existing railroads, was enacted in 2007, when just 5,897 carloads of crude petroleum originated on U.S. Class I railroads. Last year, that number grew to 233,819 carloads – a growth of more than 3865%.[98] In 2013, that number has grown again, totaling 299,052 through the first 3 quarters (averaging about 100,000 per quarter). Assuming volumes will be similar in the fourth quarter, there will be about 400,000 carloads for all of 2013 – a growth of about 6700% relative to carloads in 2007.[99] This exponential growth in unit shipments of crude by rail and associated incidents, as well as the recent Lac-Mégantic disaster, compel the conclusion that unit shipments of crude oil demand enhanced safety standards and should be subjected to the re-routing standards as "security sensitive" materials as set forth in the 9/11 Act. CBE-74

Finally, hybrid logistics, where crude is offloaded from rail at intermediate terminals, with transport via water and/or pipelines used for final delivery to the Refinery, should have been considered as alternatives to a 100% by rail delivery route. These are clearly on Phillip 66's[100] and other refiner's [101]plates.

5. <u>Mitigation Is Deferred To The Future</u>

The DEIR recommends several mitigation measures that would be developed in the future, outside of the CEQA review process. Thus should be fully developed as part of the DEIR to assure adequate public review. CBE-75

[98] AAR May 2013.

[99] AAR, August 29, 2013; AAR November 7, 2013.

[100] Phillips 66, Crude by Rail & Intermodal Supply Chain, Optimization and Opportunities, Refiner-Led Summit 2013, Opening Keynote Panel, August 21, 2013.

[101] Tesoro, Deutsche Bank Energy Conference, January 9, 2014.

First, prior to issuance of construction permits and notice to proceed, various fire protection and emergency response services would be developed including: "Fire Protection Plan, Emergency Response Plan, Spill Prevention Control and Countermeasure Plan, training requirement for CALFIRE and the SMR fire brigade." DEIR, pp. ES-9, IST-33. These updated plans should be included as appendices to the DEIR for public review.

CBE-75

Second, the Applicant also "shall investigate methods for reducing the onsite emissions, both from fugitive components and from locomotives" and "implement a program to limit onsite idling" prior to issuance of the Notice to Proceed, and thus outside of CEQA review. DEIR, p. IST-1.

VII. ALTERNATIVES

The DEIR considered five major alternatives to the Project: (1) truck transportation; (2) marine transportation; (3) alternative rail unloading sites; (4) loop rail unloading configuration; (5) reduced rail deliveries; (6) no project alternative. DEIR, Sec. 5.1. None of these alternatives significantly reduce impacts. Thus, they are not "alternatives" to the Project under CEQA.

The DEIR failed to evaluate other feasible alternatives that would have lesser impacts and more benefits. These include: (1) use of crude from the Price Canyon Oil Field Project Expansion, which proposes to increase local output,[102] to the extent available, rather than importing by rail; (2) continue production from existing or other nearby oil fields using enhanced oil recovery; (3) use of alternate rail route through the Central Valley with new connector rail line west from Bakersfield; (4) hybrid delivery options (e.g., partial delivery by sea or pipeline); (5) restrict crudes that can be imported.

CBE-76

The DEIR also failed to conduct any analysis at all of the no project alternative, rejecting it out of hand as it would not meet any of the project objectives. DEIR, p. 5-24. What are they? However, economic interests (at the expense of environmental impacts) is not a valid consideration under CEQA. When the no project alternative is the most environmentally superior then the next most environmentally preferred must be selected. DEIR, p. 5-33

The purpose of the Rail Spur Project, evidentially, is to reduce operating cost by importing cheaper oil. However, this should not be allowed at expense of the potentially catastrophic environment consequences, which are externalities that must be weighed, mitigated, or replaced when mitigations are not effective. Local sources of crude can be secured without the Rail Spur Project. New oil fields are currently being developed. The use of locally sourced crudes is the next most environmentally preferred.

[102] Price Canyon Oilfield Project (Freeport McMoran Oil & Gas), Available at: http://www.slocounty.ca.gov/planning/environmental/EnvironmentalNotices/PXP.htm.

Phyllis Fox
Ph.D, PE, BCEE, QEP
Environmental Management
745 White Pine Ave.
Rockledge, FL 32955
321-626-6885
PhyllisFox@gmail.com

Dr. Fox has over 40 years of experience in the field of environmental engineering, including air pollution control (BACT, BART, MACT, LAER, RACT), cost effectiveness analyses, air quality management, water quality and water supply investigations, hazardous waste investigations, environmental permitting, nuisance investigations (odor, noise), environmental impact reports, CEQA/NEPA documentation, risk assessments, and litigation support.

EDUCATION

Ph.D. Environmental/Civil Engineering, University of California, Berkeley, 1980.
M.S. Environmental/Civil Engineering, University of California, Berkeley, 1975.
B.S. Physics (with high honors), University of Florida, Gainesville, 1971.

REGISTRATION

Registered Professional Engineer: Arizona (2001-present: #36701), California (2002-present; CH 6058), Florida (2001-present; #57886), Georgia (2002-present; #PE027643), Washington (2002-present; #38692), Wisconsin (2005-present; #37595-006)
Board Certified Environmental Engineer, American Academy of Environmental Engineers, Certified in Air Pollution Control (DEE #01-20014), 2002-present
Qualified Environmental Professional (QEP), Institute of Professional Environmental Practice (QEP #02-010007), 2001-present

PROFESSIONAL HISTORY

Environmental Management, Principal, 1981-present
Lawrence Berkeley National Laboratory, Principal Investigator, 1977-1981
University of California, Berkeley, Program Manager, 1976-1977
Bechtel, Inc., Engineer, 1971-1976, 1964-1966

PROFESSIONAL AFFILIATIONS

American Chemical Society (1981-2010)
Phi Beta Kappa (1970-present)
Sigma Pi Sigma (1970-present)

Who's Who Environmental Registry, PH Publishing, Fort Collins, CO, 1992.
Who's Who in the World, Marquis Who's Who, Inc., Chicago, IL, 11th Ed., p. 371, 1993-present.
Who's Who of American Women, Marquis Who's Who, Inc., Chicago, IL, 13th Ed., p. 264, 1984-present.
Who's Who in Science and Engineering, Marquis Who's Who, Inc., New Providence, NJ, 5th Ed., p. 414, 1999-present.
Who's Who in America, Marquis Who's Who, Inc., 59th Ed., 2005.
Guide to Specialists on Toxic Substances, World Environment Center, New York, NY, p. 80, 1980.
National Research Council Committee on Irrigation-Induced Water Quality Problems (Selenium), Subcommittee on Quality Control/Quality Assurance (1985-1990).
National Research Council Committee on Surface Mining and Reclamation, Subcommittee on Oil Shale (1978-80)

REPRESENTATIVE EXPERIENCE

Performed environmental and engineering investigations, as outlined below, for a wide range of industrial and commercial facilities including: petroleum refineries and upgrades thereto; reformulated fuels projects; refinery upgrades to process heavy sour crudes, including tar sands and light sweet crudes from the Eagle Ford and Bakken Formations; petroleum distribution terminals; coal export terminals; LNG export, import, and storage terminals; shale oil plants; coal gasification & liquefaction plants; conventional and thermally enhanced oil production; underground storage tanks; pipelines; gasoline stations; landfills; railyards; hazardous waste treatment facilities; nuclear, hydroelectric, geothermal, wood, biomass, waste, tire-derived fuel, gas, oil, coke and coal-fired power plants; transmission lines; airports; hydrogen plants; petroleum coke calcining plants; coke plants; activated carbon manufacturing facilities; asphalt plants; cement plants; incinerators; flares; manufacturing facilities (e.g., semiconductors, electronic assembly, aerospace components, printed circuit boards, amusement park rides); lanthanide processing plants; ammonia plants; nitric acid plants; urea plants; food processing plants; almond hulling facilities; composting facilities; grain processing facilities; grain elevators; ethanol production facilities; soy bean oil extraction plants; biodiesel plants; paint formulation plants; wastewater treatment plants; marine terminals and ports; gas processing plants; steel mills; iron nugget production facilities; pig iron plant, based on blast furnace technology; direct reduced iron plant; acid regeneration facilities; railcar refinishing facility; battery manufacturing plants; pesticide manufacturing and repackaging facilities; pulp and paper mills; olefin plants; methanol plants; ethylene crackers; selective catalytic reduction (SCR) systems; selective noncatalytic reduction (SNCR) systems; halogen acid furnaces; contaminated property redevelopment projects (e.g., Mission Bay, Southern Pacific Railyards, Moscone Center expansion, San Diego Padres Ballpark); residential developments; commercial office parks,

campuses, and shopping centers; server farms; transportation plans; and a wide range of mines including sand and gravel, hard rock, limestone, nacholite, coal, molybdenum, gold, zinc, and oil shale.

EXPERT WITNESS/LITIGATION SUPPORT

- For plaintiffs, expert witness in civil action relating to alleged violations of the Clean Air Act, Prevention of Significant Deterioration, for historic modifications (1997-2000) at the Cemex cement plant in Lyons, Colorado. Reviewed produced documents, prepared expert and rebuttal reports on PSD applicability based on NOx emission calculations for a collection of changes considered both individually and collectively. Deposed August 2011. *United States v. Cemex, Inc.*, In U.S. District Court for the District of Colorado (Civil Action No. 09-cv-00019-MSK-MEH). Case settled June 13, 2013.
- For plaintiffs, in civil action relating to alleged violations of the Clean Air Act, Prevention of Significant Deterioration, for historic modifications (1988 – 2000) at James De Young Units 3, 4, and 5. Reviewed produced documents, analyzed CEMS and EIA data, and prepared netting and BACT analyses for NOx, SO2, and PM10. Expert report February 24, 2010 and affidavit February 20, 2010. *Sierra Club v. City of Holland, et al.*, U.S. District Court, Western District of Michigan.
- For plaintiffs, in civil action alleging failure to obtain MACT permit, expert on potential to emit hydrogen chloride (HCl) from a new coal-fired boiler. Reviewed record, estimated HCl emissions, wrote expert report June 2010 and March 2013 (Cost to Install a Scrubber at the Lamar Repowering Project Pursuant to Case-by-Case MACT), deposed August 2010 and March 2013. *Wildearth Guardian et al. v. Lamar Utilities Board,* Civil Action No. 09-cv-02974, U.S. District Court, District of Colorado. Case settled August 2013.
- For plaintiffs, expert witness on permitting, emission calculations, and wastewater treatment for coal to gasoline plant. Reviewed produced documents. Assisted in preparation of comments on draft minor source permit. Wrote two affidavits on key issues in case. Presented direct and rebuttal testimony 10/27 - 10/28/10 on permit enforceability and failure to properly calculate potential to emit, including underestimate of flaring emissions and omission of VOC and CO emissions from wastewater treatment, cooling tower, tank roof landings, and malfunctions. *Sierra Club, Ohio Valley Environmental Coalition, Coal River Mountain Watch, West Virginia Highlands Conservancy v. John Benedict, Director, Division of Air Quality, West Virginia Department of Environmental Protection and TransGas Development System, LLC*, Appeal No. 10-01-AQB. Virginia Air Quality Board remanded the permit on March 28, 2011 ordering reconsideration of potential to emit calculations, including: (1) support for assumed flare efficiency; (2) inclusion of startup, shutdown and malfunction emissions; and (3) inclusion of wastewater treatment emissions in potential to emit calculations.

- For plaintiffs, expert on BACT emission limits for gas-fired combined cycle power plant. Prepared declaration in support of CBE's Opposition to the United States' Motion for Entry of Proposed Amended Consent Decree. Assisted in settlement discussions. *U.S. EPA, Plaintiff, Communities for a Better Environment, Intervenor Plaintiff, v. Pacific Gas & Electric Company, et al.*, U.S. District Court, Northern District of California, San Francisco Division, Case No. C-09-4503 SI.
- Technical expert in confidential settlement discussions with large coal-fired utility on BACT control technology and emission limits for NOx, SO2, PM, PM2.5, and CO for new natural gas fired combined cycle and simple cycle turbines with oil backup. (July 2010). Case settled.
- For plaintiffs, expert witness in remedy phase of civil action relating to alleged violations of the Clean Air Act, Prevention of Significant Deterioration, for historic modifications (1998-99) at Gallagher Units 1 and 3. Reviewed produced documents, prepared expert and rebuttal reports on historic and current-day BACT for SO2, control costs, and excess emissions of SO2. Deposed 11/18/09. *United States et al. v. Cinergy, et al.*, In U.S. District Court for the Southern District of Indiana, Indianapolis Division, Civil Action No. IP99-1693 C-M/S. Settled 12/22/09.
- For plaintiffs, expert witness on MACT, BACT for NOx, and enforceability in an administrative appeal of draft state air permit issued for four 300-MW pet-coke-fired CFBs. Reviewed produced documents and prepared prefiled testimony. Deposed 10/8/09 and 11/9/09. Testified 11/10/09. *Application of Las Brisas Energy Center, LLC for State Air Quality Permit*; before the State Office of Administrative Hearings, Texas. Permit remanded 3/29/10 as LBEC failed to meet burden of proof on a number of issues including MACT. Texas Court of Appeals dismissed an appeal to reinstate the permit. The Texas Commission on Environmental Quality and Las Brisas Energy Center, LLC sought to overturn the Court of Appeals decision but moved to have their appeal dismissed in August 2013.
- For defense, expert witness in unlawful detainer case involving a gasoline station, minimart, and residential property with contamination from leaking underground storage tanks. Reviewed agency files and inspected site. Presented expert testimony on July 6, 2009, on causes of, nature and extent of subsurface contamination. *A. Singh v. S. Assaedi,* in Contra Costa County Superior Court, CA. Settled August 2009.
- For plaintiffs, expert witness on netting and enforceability for refinery being upgraded to process tar sands crude. Reviewed produced documents. Prepared expert and rebuttal reports addressing use of emission factors for baseline, omitted sources including coker, flares, tank landings and cleaning, and enforceability. Deposed. *In the Matter of Objection to the Issuance of Significant Source Modification Permit No. 089-25484-00453 to BP Products North America Inc., Whiting Business Unit, Save the Dunes Council, Inc., Sierra*

Club., Inc., Hoosier Environmental Council et al., Petitioners, B. P. Products North American, Respondents/Permittee, before the Indiana Office of Environmental Adjudication.

- For plaintiffs, expert witness on BACT, MACT, and enforceability in appeal of Title V permit issued to 600 MW coal-fired power plant burning Powder River Basin coal. Prepared technical comments on draft air permit. Reviewed record on appeal, drafted BACT, MACT, and enforceability pre-filed testimony. Drafted MACT and enforceability pre-filed rebuttal testimony. Deposed March 24, 2009. Testified June 10, 2009. *In Re: Southwestern Electric Power Company*, Arkansas Pollution Control and Ecology Commission, Consolidated Docket No. 08-006-P. Recommended Decision issued December 9, 2009 upholding issued permit. Commission adopted Recommended Decision January 22, 2010.
- For plaintiffs, expert witness in remedy phase of civil action relating to alleged violations of the Clean Air Act, Prevention of Significant Deterioration, for historic modifications (1989-1992) at Wabash Units 2, 3 and 5. Reviewed produced documents, prepared expert and rebuttal report on historic and current-day BACT for NOx and SO2, control costs, and excess emissions of NOx, SO2, and mercury. Deposed 10/21/08. *United States et al. v. Cinergy, et al.*, In U.S. District Court for the Southern District of Indiana, Indianapolis Division, Civil Action No. IP99-1693 C-M/S. Testified 2/3/09. Memorandum Opinion & Order 5-29-09 requiring shutdown of Wabash River Units 2, 3, 5 by September 30, 2009, run at baseline until shutdown, and permanently surrender SO2 emission allowances.
- For plaintiffs, expert witness in liability phase of civil action relating to alleged violations of the Clean Air Act, Prevention of Significant Deterioration, for three historic modifications (1997-2001) at two portland cement plants involving three cement kilns. Reviewed produced documents, analyzed CEMS data covering subject period, prepared netting analysis for NOx, SO_2 and CO, and prepared expert and rebuttal reports. *United States v. Cemex California Cement,* In U.S. District Court for the Central District of California, Eastern Division, Case No. ED CV 07-00223-GW (JCRx), Settled 1/15/09.
- For intervenors Clean Wisconsin and Citizens Utility Board, prepared data requests, reviewed discovery and expert report. Prepared prefiled direct, rebuttal and surrebuttal testimony on cost to extend life of existing Oak Creek Units 5-8 and cost to address future regulatory requirements to determine whether to control or shutdown one or more of the units. Oral testimony 2/5/08. Application for a Certificate of Authority to Install Wet Flue Gas Desulfurization and Selective Catalytic Reduction Facilities and Associated Equipment for Control of Sulfur Dioxide and Nitrogen Oxide Emissions at Oak Creek Power Plant Units 5, 6, 7 and 8, WPSC Docket No. 6630-CE-299.
- For plaintiffs, expert witness on alternatives analysis and BACT for NOx, SO2, total PM10, and sulfuric acid mist in appeal of PSD permit issued to 1200 MW coal fired power plant burning Powder River Basin and/or Central Appalachian coal (Longleaf). Assisted in drafting technical comments on NOx on draft permit. Prepared expert disclosure. Presented 8+ days

of direct and rebuttal expert testimony. Attended all 21 days of evidentiary hearing from 9/5/07 – 10/30/07 assisting in all aspects of hearing. *Friends of the Chatahooche and Sierra Club v. Dr. Carol Couch, Director, Environmental Protection Division of Natural Resources Department, Respondent, and Longleaf Energy Associates, Intervener*. ALJ Final Decision 1/11/08 denying petition. ALJ Order vacated & remanded for further proceedings, Fulton County Superior Court, 6/30/08. Court of Appeals of GA remanded the case with directions that the ALJ's final decision be vacated to consider the evidence under the correct standard of review, July 9, 2009. The ALJ issued an opinion April 2, 2010 in favor of the applicant. Final permit issued April 2010.

- For plaintiffs, expert witness on diesel exhaust in inverse condemnation case in which Port expanded maritime operations into residential neighborhoods, subjecting plaintiffs to noise, light, and diesel fumes. Measured real-time diesel particulate concentrations from marine vessels and tug boats on plaintiffs' property. Reviewed documents, depositions, DVDs, and photographs provided by counsel. Deposed. Testified October 24, 2006. *Ann Chargin, Richard Hackett, Carolyn Hackett, et al. v. Stockton Port District*, Superior Court of California, County of San Joaquin, Stockton Branch, No. CV021015. Judge ruled for plaintiffs.
- For plaintiffs, expert witness on NOx emissions and BACT in case alleging failure to obtain necessary permits and install controls on gas-fired combined-cycle turbines. Prepared and reviewed (applicant analyses) of NOx emissions, BACT analyses (water injection, SCR, ultra low NOx burners), and cost-effectiveness analyses based on site visit, plant operating records, stack tests, CEMS data, and turbine and catalyst vendor design information. Participated in negotiations to scope out consent order. *United States v. Nevada Power.* Case settled June 2007, resulting in installation of dry low NOx burners (5 ppm NOx averaged over 1 hr) on four units and a separate solar array at a local business.
- For plaintiffs, expert witness in appeal of PSD permit issued to 850 MW coal fired boiler burning Powder River Basin coal (Iatan Unit 2) on BACT for particulate matter, sulfuric acid mist and opacity and emission calculations for alleged historic violations of PSD. Assisted in drafting technical comments, petition for review, discovery requests, and responses to discovery requests. Reviewed produced documents. Prepared expert report on BACT for particulate matter. Assisted with expert depositions. Deposed February 7, 8, 27, 28, 2007. *In Re PSD Construction Permit Issued to Great Plains Energy, Kansas City Power & Light – Iatan Generating Station, Sierra Club v. Missouri Department of Natural Resources, Great Plains Energy, and Kansas City Power & Light.* Case settled March 27, 2007, providing offsets for over 6 million ton/yr of CO2 and lower NOx and SO_2 emission limits.
- For plaintiffs, expert witness in remedy phase of civil action relating to alleged violations of the Clean Air Act, Prevention of Significant Deterioration, for historic modifications of coal-fired boilers and associated equipment. Reviewed produced documents, prepared expert report on cost to retrofit 24 coal-fired power plants with scrubbers designed to remove 99%

of the sulfur dioxide from flue gases. Prepared supplemental and expert report on cost estimates and BACT for SO2 for these 24 complaint units. Deposed 1/30/07 and 3/14/07. *United States and State of New York et al. v. American Electric Power*, In U.S. District Court for the Southern District of Ohio, Eastern Division, Consolidated Civil Action Nos. C2-99-1182 and C2-99-1250. Settlement announced 10/9/07.

- For plaintiffs, expert witness on BACT, enforceability, and alternatives analysis in appeal of PSD permit issued for a 270-MW pulverized coal fired boiler burning Powder River Basin coal (City Utilities Springfield Unit 2). Reviewed permitting file and assisted counsel draft petition and prepare and respond to interrogatories and document requests. Reviewed interrogatory responses and produced documents. Assisted with expert depositions. Deposed August 2005. Evidentiary hearings October 2005. *In the Matter of Linda Chipperfield and Sierra Club v. Missouri Department of Natural Resources.* Missouri Supreme Court denied review of adverse lower court rulings August 2007.
- For plaintiffs, expert witness in civil action relating to plume touchdowns at AEP's Gavin coal-fired power plant. Assisted counsel draft interrogatories and document requests. Reviewed responses to interrogatories and produced documents. Prepared expert report "Releases of Sulfuric Acid Mist from the Gavin Power Station." The report evaluates sulfuric acid mist releases to determine if AEP complied with the requirements of CERCLA Section 103(a) and EPCRA Section 304. This report also discusses the formation, chemistry, release characteristics, and abatement of sulfuric acid mist in support of the claim that these releases present an imminent and substantial endangerment to public health under Section 7002(a)(1)(B) of the Resource Conservation and Recovery Act ("RCRA"). *Citizens Against Pollution v. Ohio Power Company*, In the U.S. District Court for the Southern District of Ohio, Eastern Division, Civil Action No. 2-04-cv-371. Case settled 12-8-06.
- For petitioners, expert witness in contested case hearing on BACT, enforceability, and emission estimates for an air permit issued to a 500-MW supercritical Power River Basin coal-fired boiler (Weston Unit 4). Assisted counsel prepare comments on draft air permit and respond to and draft discovery. Reviewed produced file, deposed (7/05), and prepared expert report on BACT and enforceability. Evidentiary hearings September 2005. *In the Matter of an Air Pollution Control Construction Permit Issued to Wisconsin Public Service Corporation for the Construction and Operation of a 500 MW Pulverized Coal-fired Power Plant Known as Weston Unit 4 in Marathon County, Wisconsin*, Case No. IH-04-21. The Final Order, issued 2/10/06, lowered the NOx BACT limit from 0.07 lb/MMBtu to 0.06 lb/MMBtu based on a 30-day average, added a BACT SO2 control efficiency, and required a 0.0005% high efficiency drift eliminator as BACT for the cooling tower. The modified permit, including these provisions, was issued 3/28/07. Additional appeals in progress.
- For plaintiffs, adviser on technical issues related to Citizen Suit against U.S. EPA regarding failure to update New Source Performance Standards for petroleum refineries, 40 CFR 60,

Subparts J, VV, and GGG. *Our Children's Earth Foundation and Sierra Club v. U.S. EPA et al.* Case settled July 2005. CD No. C 05-00094 CW, U.S. District Court, Northern District of California – Oakland Division. Proposed revisions to standards of performance for petroleum refineries published 72 FR 27178 (5/14/07).

- For interveners, reviewed proposed Consent Decree settling Clean Air Act violations due to historic modifications of boilers and associated equipment at two coal-fired power plants. In response to stay order, reviewed the record, selected one representative activity at each of seven generating units, and analyzed to identify CAA violations. Identified NSPS and NSR violations for NOx, SO_2, PM/PM10, and sulfuric acid mist. Summarized results in an expert report. *United States of America, and Michael A. Cox, Attorney General of the State of Michigan, ex rel. Michigan Department of Environmental Quality, Plaintiffs, and Clean Wisconsin, Sierra Club, and Citizens' Utility Board, Intervenors, v. Wisconsin Electric Power Company, Defendant*, U.S. District Court for the Eastern District of Wisconsin, Civil Action No. 2:03-CV-00371-CNC. Order issued 10-1-07 denying petition.
- For a coalition of Nevada labor organizations (ACE), reviewed preliminary determination to issue a Class I Air Quality Operating Permit to Construct and supporting files for a 250-MW pulverized coal-fired boiler (Newmont). Prepared about 100 pages of technical analyses and comments on BACT, MACT, emission calculations, and enforceability. Assisted counsel draft petition and reply brief appealing PSD permit to U.S. EPA Environmental Appeals Board (EAB). Order denying review issued 12/21/05. *In re Newmont Nevada Energy Investment, LLC, TS Power Plant*, PSD Appeal No. 05-04 (EAB 2005).
- For petitioners and plaintiffs, reviewed and prepared comments on air quality and hazardous waste based on negative declaration for refinery ultra low sulfur diesel project located in SCAQMD. Reviewed responses to comments and prepared responses. Prepared declaration and presented oral testimony before SCAQMD Hearing Board on exempt sources (cooling towers) and calculation of potential to emit under NSR. Petition for writ of mandate filed March 2005. Case remanded by Court of Appeals to trial court to direct SCAQMD to re-evaluate the potential environmental significance of NOx emissions resulting from the project in accordance with court's opinion. California Court of Appeals, Second Appellate Division, on December 18, 2007, affirmed in part (as to baseline) and denied in part. *Communities for a Better Environment v. South Coast Air Quality Management District and ConocoPhillips and Carlos Valdez et al v. South Coast Air Quality Management District and ConocoPhillips.* Certified for partial publication 1/16/08. Appellate Court opinion upheld by CA Supreme Court 3/15/10. *(2010) 48 Cal.4th 310*.
- For amici seeking to amend a proposed Consent Decree to settle alleged NSR violations at Chevron refineries, reviewed proposed settlement, related files, subject modifications, and emission calculations. Prepared declaration on emission reductions, identification of NSR and NSPS violations, and BACT/LAER for FCCUs, heaters and boilers, flares, and sulfur recovery plants. *U.S. et al. v. Chevron U.S.A.*, Northern District of California, Case No. C

03-04650. Memorandum and Order Entering Consent Decree issued June 2005. Case No. C 03-4650 CRB.

- For petitioners, prepared declaration on enforceability of periodic monitoring requirements, in response to EPA's revised interpretation of 40 CFR 70.6(c)(1). This revision limited additional monitoring required in Title V permits. 69 FR 3203 (Jan. 22, 2004). *Environmental Integrity Project et al. v. EPA* (U.S. Court of Appeals for the District of Columbia). Court ruled the Act requires all Title V permits to contain monitoring requirements to assure compliance. *Sierra Club v. EPA*, 536 F.3d 673 (D.C. Cir. 2008).
- For interveners in application for authority to construct a 500 MW supercritical coal-fired generating unit before the Wisconsin Public Service Commission, prepared pre-filed written direct and rebuttal testimony with oral cross examination and rebuttal on BACT and MACT (Weston 4). Prepared written comments on BACT, MACT, and enforceability on draft air permit for same facility.
- For property owners in Nevada, evaluated the environmental impacts of a 1,450-MW coal-fired power plant proposed in a rural area adjacent to the Black Rock Desert and Granite Range, including emission calculations, air quality modeling, comments on proposed use permit to collect preconstruction monitoring data, and coordination with agencies and other interested parties. Project cancelled.
- For environmental organizations, reviewed draft PSD permit for a 600-MW coal-fired power plant in West Virginia (Longview). Prepared comments on permit enforceability; coal washing; BACT for SO_2 and PM10; Hg MACT; and MACT for HCl, HF, non-Hg metallic HAPs, and enforceability. Assist plaintiffs draft petition appealing air permit. Retained as expert to develop testimony on MACT, BACT, offsets, enforceability. Participate in settlement discussions. Case settled July 2004.
- For petitioners, reviewed record produced in discovery and prepared affidavit on emissions of carbon monoxide and volatile organic compounds during startup of GE 7FA combustion turbines to successfully establish plaintiff standing. *Sierra Club et al. v. Georgia Power Company* (Northern District of Georgia).
- For building trades, reviewed air quality permitting action for 1500-MW coal-fired power plant before the Kentucky Department for Environmental Protection (Thoroughbred).
- For petitioners, expert witness in administrative appeal of the PSD/Title V permit issued to a 1500-MW coal-fired power plant. Reviewed over 60,000 pages of produced documents, prepared discovery index, identified and assembled plaintiff exhibits. Deposed. Assisted counsel in drafting discovery requests, with over 30 depositions, witness cross examination, and brief drafting. Presented over 20 days of direct testimony, rebuttal and sur-rebuttal, with cross examination on BACT for NOx, SO_2, and PM/PM10; MACT for Hg and non-Hg metallic HAPs; emission estimates for purposes of Class I and II air modeling; risk assessment; and enforceability of permit limits. Evidentiary hearings from November 2003 to

June 2004. *Sierra Club et al. v. Natural Resources & Environmental Protection Cabinet, Division of Air Quality and Thoroughbred Generating Company et al.* Hearing Officer Decision issued August 9, 2005 finding in favor of plaintiffs on counts as to risk, BACT (IGCC/CFB, NOx, SO_2, Hg, Be), single source, enforceability, and errors and omissions. Assist counsel draft exceptions. Cabinet Secretary issued Order April 11, 2006 denying Hearing Offer's report, except as to NOx BACT, Hg, 99% SO2 control and certain errors and omissions.

- For citizens group in Massachusetts, reviewed, commented on, and participated in permitting of pollution control retrofits of coal-fired power plant (Salem Harbor).
- Assisted citizens group and labor union challenge issuance of conditional use permit for a 317,000 ft^2 discount store in Honolulu without any environmental review. In support of a motion for preliminary injunction, prepared 7-page declaration addressing public health impacts of diesel exhaust from vehicles serving the Project. In preparation for trial, prepared 20-page preliminary expert report summarizing results of diesel exhaust and noise measurements at two big box retail stores in Honolulu, estimated diesel PM10 concentrations for Project using ISCST, prepared a cancer health risk assessment based on these analyses, and evaluated noise impacts.
- Assisted environmental organizations to challenge the DOE Finding of No Significant Impact (FONSI) for the Baja California Power and Sempra Energy Resources Cross-Border Transmissions Lines in the U.S. and four associated power plants located in Mexico (DOE EA-1391). Prepared 20-page declaration in support of motion for summary judgment addressing emissions, including CO_2 and NH_3, offsets, BACT, cumulative air quality impacts, alternative cooling systems, and water use and water quality impacts. Plaintiff's motion for summary judgment granted in part. U.S. District Court, Southern District decision concluded that the Environmental Assessment and FONSI violated NEPA and the APA due to their inadequate analysis of the potential controversy surrounding the project, water impacts, impacts from NH_3 and CO_2, alternatives, and cumulative impacts. *Border Power Plant Working Group v. Department of Energy and Bureau of Land Management*, Case No. 02-CV-513-IEG (POR) (May 2, 2003).
- For Sacramento school, reviewed draft air permit issued for diesel generator located across from playfield. Prepared comments on emission estimates, enforceability, BACT, and health impacts of diesel exhaust. Case settled. BUG trap installed on the diesel generator.
- Assisted unions in appeal of Title V permit issued by BAAQMD to carbon plant that manufactured coke. Reviewed District files, identified historic modifications that should have triggered PSD review, and prepared technical comments on Title V permit. Reviewed responses to comments and assisted counsel draft appeal to BAAQMD hearing board, opening brief, motion to strike, and rebuttal brief. Case settled.
- Assisted California Central Coast city obtain controls on a proposed new city that would straddle the Ventura-Los Angeles County boundary. Reviewed several environmental impact reports, prepared an air quality analysis, a diesel exhaust health risk assessment, and

detailed review comments. Governor intervened and State dedicated the land for conservation purposes April 2004.

- Assisted Central California city to obtain controls on large alluvial sand quarry and asphalt plant proposing a modernization. Prepared comments on Negative Declaration on air quality, public health, noise, and traffic. Evaluated process flow diagrams and engineering reports to determine whether proposed changes increased plant capacity or substantially modified plant operations. Prepared comments on application for categorical exemption from CEQA. Presented testimony to County Board of Supervisors. Developed controls to mitigate impacts. Assisted counsel draft Petition for Writ. Case settled June 2002. Substantial improvements in plant operations were obtained including cap on throughput, dust control measures, asphalt plant loadout enclosure, and restrictions on truck routes.
- Assisted oil companies on the California Central Coast in defending class action citizen's lawsuit alleging health effects due to emissions from gas processing plant and leaking underground storage tanks. Reviewed regulatory and other files and advised counsel on merits of case. Case settled November 2001.
- Assisted oil company on the California Central Coast in defending property damage claims arising out of a historic oil spill. Reviewed site investigation reports, pump tests, leachability studies, and health risk assessments, participated in design of additional site characterization studies to assess health impacts, and advised counsel on merits of case. Prepare health risk assessment.
- Assisted unions in appeal of Initial Study/Negative Declaration ("IS/ND") for an MTBE phaseout project at a Bay Area refinery. Reviewed IS/ND and supporting agency permitting files and prepared technical comments on air quality, groundwater, and public health impacts. Reviewed responses to comments and final IS/ND and ATC permits and assisted counsel to draft petitions and briefs appealing decision to Air District Hearing Board. Presented sworn direct and rebuttal testimony with cross examination on groundwater impacts of ethanol spills on hydrocarbon contamination at refinery. Hearing Board ruled 5 to 0 in favor of appellants, remanding ATC to district to prepare an EIR.
- Assisted Florida cities in challenging the use of diesel and proposed BACT determinations in prevention of significant deterioration (PSD) permits issued to two 510-MW simple cycle peaking electric generating facilities and one 1,080-MW simple cycle/combined cycle facility. Reviewed permit applications, draft permits, and FDEP engineering evaluations, assisted counsel in drafting petitions and responding to discovery. Participated in settlement discussions. Cases settled or applications withdrawn.
- Assisted large California city in federal lawsuit alleging peaker power plant was violating its federal permit. Reviewed permit file and applicant's engineering and cost feasibility study to reduce emissions through retrofit controls. Advised counsel on feasible and cost-effective

NOx, SOx, and PM10 controls for several 1960s diesel-fired Pratt and Whitney peaker turbines. Case settled.

- Assisted coalition of Georgia environmental groups in evaluating BACT determinations and permit conditions in PSD permits issued to several large natural gas-fired simple cycle and combined-cycle power plants. Prepared technical comments on draft PSD permits on BACT, enforceability of limits, and toxic emissions. Reviewed responses to comments, advised counsel on merits of cases, participated in settlement discussions, presented oral and written testimony in adjudicatory hearings, and provided technical assistance as required. Cases settled or won at trial.
- Assisted construction unions in review of air quality permitting actions before the Indiana Department of Environmental Management ("IDEM") for several natural gas-fired simple cycle peaker and combined cycle power plants.
- Assisted coalition of towns and environmental groups in challenging air permits issued to 523 MW dual fuel (natural gas and distillate) combined-cycle power plant in Connecticut. Prepared technical comments on draft permits and 60 pages of written testimony addressing emission estimates, startup/shutdown issues, BACT/LAER analyses, and toxic air emissions. Presented testimony in adjudicatory administrative hearings before the Connecticut Department of Environmental Protection in June 2001 and December 2001.
- Assisted various coalitions of unions, citizens groups, cities, public agencies, and developers in licensing and permitting of over 110 coal, gas, oil, biomass, and pet coke-fired power plants generating over 75,000 MW of electricity. These included base-load, combined cycle, simple cycle, and peaker power plants in Alaska, Arizona, Arkansas, California, Colorado, Georgia, Florida, Illinois, Indiana, Kentucky, Michigan, Missouri, Ohio, Oklahoma, Oregon, Texas, West Virginia, Wisconsin, and elsewhere. Prepared analyses of and comments on applications for certification, preliminary and final staff assessments, and various air, water, wastewater, and solid waste permits issued by local agencies. Presented written and oral testimony before various administrative bodies on hazards of ammonia use and transportation, health effects of air emissions, contaminated property issues, BACT/LAER issues related to SCR and SCONOx, criteria and toxic pollutant emission estimates, MACT analyses, air quality modeling, water supply and water quality issues, and methods to reduce water use, including dry cooling, parallel dry-wet cooling, hybrid cooling, and zero liquid discharge systems.
- Assisted unions, cities, and neighborhood associations in challenging an EIR issued for the proposed expansion of the Oakland Airport. Reviewed two draft EIRs and prepared a health risk assessment and extensive technical comments on air quality and public health impacts. The California Court of Appeals, First Appellate District, ruled in favor of appellants and plaintiffs, concluding that the EIR "2) erred in using outdated information in assessing the emission of toxic air contaminants (TACs) from jet aircraft; 3) failed to support its decision

not to evaluate the health risks associated with the emission of TACs with meaningful analysis," thus accepting my technical arguments and requiring the Port to prepare a new EIR. See *Berkeley Keep Jets Over the Bay Committee, City of San Leandro, and City of Alameda et al. v. Board of Port Commissioners* (August 30, 2001) 111 Cal.Rptr.2d 598.

- Assisted lessor of former gas station with leaking underground storage tanks and TCE contamination from adjacent property. Lessor held option to purchase, which was forfeited based on misrepresentation by remediation contractor as to nature and extent of contamination. Remediation contractor purchased property. Reviewed regulatory agency files and advised counsel on merits of case. Case not filed.
- Advised counsel on merits of several pending actions, including a Proposition 65 case involving groundwater contamination at an explosives manufacturing firm and two former gas stations with leaking underground storage tanks.
- Assisted defendant foundry in Oakland in a lawsuit brought by neighbors alleging property contamination, nuisance, trespass, smoke, and health effects from foundry operation. Inspected and sampled plaintiff's property. Advised counsel on merits of case. Case settled.
- Assisted business owner facing eminent domain eviction. Prepared technical comments on a negative declaration for soil contamination and public health risks from air emissions from a proposed redevelopment project in San Francisco in support of a CEQA lawsuit. Case settled.
- Assisted neighborhood association representing residents living downwind of a Berkeley asphalt plant in separate nuisance and CEQA lawsuits. Prepared technical comments on air quality, odor, and noise impacts, presented testimony at commission and council meetings, participated in community workshops, and participated in settlement discussions. Cases settled. Asphalt plant was upgraded to include air emission and noise controls, including vapor collection system at truck loading station, enclosures for noisy equipment, and improved housekeeping.
- Assisted a Fortune 500 residential home builder in claims alleging health effects from faulty installation of gas appliances. Conducted indoor air quality study, advised counsel on merits of case, and participated in discussions with plaintiffs. Case settled.
- Assisted property owners in Silicon Valley in lawsuit to recover remediation costs from insurer for large TCE plume originating from a manufacturing facility. Conducted investigations to demonstrate sudden and accidental release of TCE, including groundwater modeling, development of method to date spill, preparation of chemical inventory, investigation of historical waste disposal practices and standards, and on-site sewer and storm drainage inspections and sampling. Prepared declaration in opposition to motion for summary judgment. Case settled.

- Assisted residents in east Oakland downwind of a former battery plant in class action lawsuit alleging property contamination from lead emissions. Conducted historical research and dry deposition modeling that substantiated claim. Participated in mediation at JAMS. Case settled.
- Assisted property owners in West Oakland who purchased a former gas station that had leaking underground storage tanks and groundwater contamination. Reviewed agency files and advised counsel on merits of case. Prepared declaration in opposition to summary judgment. Prepared cost estimate to remediate site. Participated in settlement discussions. Case settled.
- Consultant to counsel representing plaintiffs in two Clean Water Act lawsuits involving selenium discharges into San Francisco Bay from refineries. Reviewed files and advised counsel on merits of case. Prepared interrogatory and discovery questions, assisted in deposing opposing experts, and reviewed and interpreted treatability and other technical studies. Judge ruled in favor of plaintiffs.
- Assisted oil company in a complaint filed by a resident of a small California beach community alleging that discharges of tank farm rinse water into the sanitary sewer system caused hydrogen sulfide gas to infiltrate residence, sending occupants to hospital. Inspected accident site, interviewed parties to the event, and reviewed extensive agency files related to incident. Used chemical analysis, field simulations, mass balance calculations, sewer hydraulic simulations with SWMM44, atmospheric dispersion modeling with SCREEN3, odor analyses, and risk assessment calculations to demonstrate that the incident was caused by a faulty drain trap and inadequate slope of sewer lateral on resident's property. Prepared a detailed technical report summarizing these studies. Case settled.
- Assisted large West Coast city in suit alleging that leaking underground storage tanks on city property had damaged the waterproofing on downgradient building, causing leaks in an underground parking structure. Reviewed subsurface hydrogeologic investigations and evaluated studies conducted by others documenting leakage from underground diesel and gasoline tanks. Inspected, tested, and evaluated waterproofing on subsurface parking structure. Waterproofing was substandard. Case settled.
- Assisted residents downwind of gravel mine and asphalt plant in Siskiyou County, California, in suit to obtain CEQA review of air permitting action. Prepared two declarations analyzing air quality and public health impacts. Judge ruled in favor of plaintiffs, closing mine and asphalt plant.
- Assisted defendant oil company on the California Central Coast in class action lawsuit alleging property damage and health effects from subsurface petroleum contamination. Reviewed documents, prepared risk calculations, and advised counsel on merits of case. Participated in settlement discussions. Case settled.

- Assisted defendant oil company in class action lawsuit alleging health impacts from remediation of petroleum contaminated site on California Central Coast. Reviewed documents, designed and conducted monitoring program, and participated in settlement discussions. Case settled.
- Consultant to attorneys representing irrigation districts and municipal water districts to evaluate a potential challenge of USFWS actions under CVPIA section 3406(b)(2). Reviewed agency files and collected and analyzed hydrology, water quality, and fishery data. Advised counsel on merits of case. Case not filed.
- Assisted residents downwind of a Carson refinery in class action lawsuit involving soil and groundwater contamination, nuisance, property damage, and health effects from air emissions. Reviewed files and provided advise on contaminated soil and groundwater, toxic emissions, and health risks. Prepared declaration on refinery fugitive emissions. Prepared deposition questions and reviewed deposition transcripts on air quality, soil contamination, odors, and health impacts. Case settled.
- Assisted residents downwind of a Contra Costa refinery who were affected by an accidental release of naphtha. Characterized spilled naphtha, estimated emissions, and modeled ambient concentrations of hydrocarbons and sulfur compounds. Deposed. Presented testimony in binding arbitration at JAMS. Judge found in favor of plaintiffs.
- Assisted residents downwind of Contra Costa County refinery in class action lawsuit alleging property damage, nuisance, and health effects from several large accidents as well as routine operations. Reviewed files and prepared analyses of environmental impacts. Prepared declarations, deposed, and presented testimony before jury in one trial and judge in second. Case settled.
- Assisted business owner claiming damages from dust, noise, and vibration during a sewer construction project in San Francisco. Reviewed agency files and PM10 monitoring data and advised counsel on merits of case. Case settled.
- Assisted residents downwind of Contra Costa County refinery in class action lawsuit alleging property damage, nuisance, and health effects. Prepared declaration in opposition to summary judgment, deposed, and presented expert testimony on accidental releases, odor, and nuisance before jury. Case thrown out by judge, but reversed on appeal and not retried.
- Presented testimony in small claims court on behalf of residents claiming health effects from hydrogen sulfide from flaring emissions triggered by a power outage at a Contra Costa County refinery. Analyzed meteorological and air quality data and evaluated potential health risks of exposure to low concentrations of hydrogen sulfide. Judge awarded damages to plaintiffs.
- Assisted construction unions in challenging PSD permit for an Indiana steel mill. Prepared technical comments on draft PSD permit, drafted 70-page appeal of agency permit action to

the Environmental Appeals Board challenging permit based on faulty BACT analysis for electric arc furnace and reheat furnace and faulty permit conditions, among others, and drafted briefs responding to four parties. EPA Region V and the EPA General Counsel intervened as amici, supporting petitioners. EAB ruled in favor of petitioners, remanding permit to IDEM on three key issues, including BACT for the reheat furnace and lead emissions from the EAF. Drafted motion to reconsider three issues. Prepared 69 pages of technical comments on revised draft PSD permit. Drafted second EAB appeal addressing lead emissions from the EAF and BACT for reheat furnace based on European experience with SCR/SNCR. Case settled. Permit was substantially improved. See *In re: Steel Dynamics, Inc.*, PSD Appeal Nos. 99-4 & 99-5 (EAB June 22, 2000).

- Assisted defendant urea manufacturer in Alaska in negotiations with USEPA to seek relief from penalties for alleged violations of the Clean Air Act. Reviewed and evaluated regulatory files and monitoring data, prepared technical analysis demonstrating that permit limits were not violated, and participated in negotiations with EPA to dismiss action. Fines were substantially reduced and case closed.
- Assisted construction unions in challenging PSD permitting action for an Indiana grain mill. Prepared technical comments on draft PSD permit and assisted counsel draft appeal of agency permit action to the Environmental Appeals Board challenging permit based on faulty BACT analyses for heaters and boilers and faulty permit conditions, among others. Case settled.
- As part of a consent decree settling a CEQA lawsuit, assisted neighbors of a large west coast port in negotiations with port authority to secure mitigation for air quality impacts. Prepared technical comments on mobile source air quality impacts and mitigation and negotiated a $9 million CEQA mitigation package. Represented neighbors on technical advisory committee established by port to implement the air quality mitigation program. Program successfully implemented.
- Assisted construction unions in challenging permitting action for a California hazardous waste incinerator. Prepared technical comments on draft permit, assisted counsel prepare appeal of EPA permit to the Environmental Appeals Board. Participated in settlement discussions on technical issues with applicant and EPA Region 9. Case settled.
- Assisted environmental group in challenging DTSC Negative Declaration on a hazardous waste treatment facility. Prepared technical comments on risk of upset, water, and health risks. Writ of mandamus issued.
- Assisted several neighborhood associations and cities impacted by quarries, asphalt plants, and cement plants in Alameda, Shasta, Sonoma, and Mendocino counties in obtaining mitigations for dust, air quality, public health, traffic, and noise impacts from facility operations and proposed expansions.

- For over 100 industrial facilities, commercial/campus, and redevelopment projects, developed the record in preparation for CEQA and NEPA lawsuits. Prepared technical comments on hazardous materials, solid wastes, public utilities, noise, worker safety, air quality, public health, water resources, water quality, traffic, and risk of upset sections of EIRs, EISs, FONSIs, initial studies, and negative declarations. Assisted counsel in drafting petitions and briefs and prepared declarations.
- For several large commercial development projects and airports, assisted applicant and counsel prepare defensible CEQA documents, respond to comments, and identify and evaluate "all feasible" mitigation to avoid CEQA challenges. This work included developing mitigation programs to reduce traffic-related air quality impacts based on energy conservation programs, solar, low-emission vehicles, alternative fuels, exhaust treatments, and transportation management associations.

SITE INVESTIGATION/REMEDIATION/CLOSURE

- Technical manager and principal engineer for characterization, remediation, and closure of waste management units at former Colorado oil shale plant. Constituents of concern included BTEX, As, 1,1,1-TCA, and TPH. Completed groundwater monitoring programs, site assessments, work plans, and closure plans for seven process water holding ponds, a refinery sewer system, and processed shale disposal area. Managed design and construction of groundwater treatment system and removal actions and obtained clean closure.
- Principal engineer for characterization, remediation, and closure of process water ponds at a former lanthanide processing plant in Colorado. Designed and implemented groundwater monitoring program and site assessments and prepared closure plan.
- Advised the city of Sacramento on redevelopment of two former railyards. Reviewed work plans, site investigations, risk assessment, RAPS, RI/FSs, and CEQA documents. Participated in the development of mitigation strategies to protect construction and utility workers and the public during remediation, redevelopment, and use of the site, including buffer zones, subslab venting, rail berm containment structure, and an environmental oversight plan.
- Provided technical support for the investigation of a former sanitary landfill that was redeveloped as single family homes. Reviewed and/or prepared portions of numerous documents, including health risk assessments, preliminary endangerment assessments, site investigation reports, work plans, and RI/FSs. Historical research to identify historic waste disposal practices to prepare a preliminary endangerment assessment. Acquired, reviewed, and analyzed the files of 18 federal, state, and local agencies, three sets of construction field notes, analyzed 21 aerial photographs and interviewed 14 individuals associated with operation of former landfill. Assisted counsel in defending lawsuit brought by residents

alleging health impacts and diminution of property value due to residual contamination. Prepared summary reports.

- Technical oversight of characterization and remediation of a nitrate plume at an explosives manufacturing facility in Lincoln, CA. Provided interface between owners and consultants. Reviewed site assessments, work plans, closure plans, and RI/FSs.
- Consultant to owner of large western molybdenum mine proposed for NPL listing. Participated in negotiations to scope out consent order and develop scope of work. Participated in studies to determine premining groundwater background to evaluate applicability of water quality standards. Served on technical committees to develop alternatives to mitigate impacts and close the facility, including resloping and grading, various thickness and types of covers, and reclamation. This work included developing and evaluating methods to control surface runoff and erosion, mitigate impacts of acid rock drainage on surface and ground waters, and stabilize nine waste rock piles containing 328 million tons of pyrite-rich, mixed volcanic waste rock (andesites, rhyolite, tuff). Evaluated stability of waste rock piles. Represented client in hearings and meetings with state and federal oversight agencies.

REGULATORY (PARTIAL LIST)

- In July 2013, prepared technical report on fugitive particulate matter emissions from coal train staging at the proposed Coyote Island Terminal, Oregon, for draft Permit No. 25-0015-ST-01.
- In July 2013, prepared technical comments on air quality impacts of the Finger Lakes LPG Storage Facility as reported in various Environmental Impact Statements.
- In June 2013, prepared technical report on a Mitigated Negative Declaration for a new rail terminal at the Valero Benicia Refinery to import increased amounts of "North American" crudes in. Comments addressed air quality impacts of refining increased amounts of tar sands crudes.
- In May 2013, prepared comments on draft PSD permit for major expansion of midwest refinery to process 100% tar sands crudes, including a complex netting analysis involving debottlenecking and piecemealing and BACT analyses.
- In April 2013, prepared technical report on the Draft Supplemental Environmental Impact Statement (DSEIS) for the Keystone XL Pipeline on air quality impacts from refining increased amount of tar sands crudes at Refineries in PADD 3.
- In October 2012, prepared technical report on the Environmental Review for the Coyote Island Terminal Dock at the Port of Morrow on fugitive particulate matter emissions.

- Prepared cost analyses and comments on New York's proposed BART determinations for NOx, SO2, and PM and EPA's proposed approval of BART determinations for Danskammer Generating Station under New York Regional Haze State Implementation Plan and Federal Implementation Plan, 77 FR 51915 (August 28, 2012).
- Prepared cost analyses and comments on NOx BART determinations for Regional Haze State Implementation Plan for State of Nevada, 77 FR 23191 (April 18, 2012) and 77 FR 25660 (May 1, 2012).
- Prepared analyses of and comments on New Source Performance Standards for Greenhouse Gas Emissions for New Stationary Sources: Electric Utility Generating Units, 77 FR 22392 (April 13, 2012).
- Prepared comments on CASPR-BART emission equivalency and NOx and PM BART determinations in EPA proposed approval of State Implementation Plan for Pennsylvania Regional Haze Implementation Plan, 77 FR 3984 (January 26, 2012).
- Prepared comments and statistical analyses on hazardous air pollutants (HAPs) emission controls, monitoring, compliance methods, and the use of surrogates for acid gases, organic HAPs, and metallic HAPs for proposed National Emission Standards for Hazardous Air Pollutants from Coal- and Oil-Fired Electric Utility Steam Generating Units, 76 FR 24976 (May 3, 2011).
- Prepared cost analyses and comments on NOx BART determinations and emission reductions for proposed Federal Implementation Plan for Four Corners Power Plant, 75 FR 64221 (October 19, 2010).
- Prepared cost analyses and comments on NOx BART determinations for Colstrip Units 1- 4 for Montana State Implementation Plan and Regional Haze Federal Implementation Plan, 77 FR 23988 (April 20, 2010).
- For EPA Region 8, prepared report: Revised BART Cost Effectiveness Analysis for Tail-End Selective Catalytic Reduction at the Basin Electric Power Cooperative Leland Olds Station Unit 2 Final Report, March 2011, in support of 76 FR 58570 (Sept. 21, 2011).
- For EPA Region 6, prepared report: Revised BART Cost-Effectiveness Analysis for Selective Catalytic Reduction at the Public Service Company of New Mexico San Juan Generating Station, November 2010, in support of 76 FR 52388 (Aug. 22, 2011).
- For EPA Region 6, prepared report: Revised BART Cost-Effectiveness Analysis for Flue Gas Desulfurization at Coal-Fired Electric Generating Units in Oklahoma: Sooner Units 1 & 2, Muskogee Units 4 & 5, Northeastern Units 3 &4, October 2010, in support of 76 FR 16168 (March 26, 2011). My work was upheld in: *State of Oklahoma v. EPA*, App. Case 12-9526 (10th Cri. July 19, 2013).

- Identified errors in N_2O emission factors in the Mandatory Greenhouse Gas Reporting Rule, 40 CFR 98, and prepared technical analysis to support Petition for Rulemaking to Correct Emissions Factors in the Mandatory Greenhouse Gas Reporting Rule, filed with EPA on 10/28/10.
- Assist interested parties develop input for and prepare comments on the Information Collection Request for Petroleum Refinery Sector NSPS and NESHAP Residual Risk and Technology Review, 75 FR 60107 (9/29/10).
- Technical reviewer of EPA's "Emission Estimation Protocol for Petroleum Refineries," posted for public comments on CHIEF on 12/23/09, prepared in response to the City of Houston's petition under the Data Quality Act (March 2010).
- Prepared comments on SCR cost effectiveness for EPA's Advanced Notice of Proposed Rulemaking, Assessment of Anticipated Visibility Improvements at Surrounding Class I Areas and Cost Effectiveness of Best Available Retrofit Technology for Four Corners Power Plant and Navajo Generating Station, 74 FR 44313 (August 28, 2009).
- Prepared comments on Proposed Rule for Standards of Performance for Coal Preparation and Processing Plants, 74 FR 25304 (May 27, 2009).
- Prepared comments on draft PSD permit for major expansion of midwest refinery to process up to 100% tar sands crudes. Participated in development of monitoring and controls to mitigate impacts and in negotiating a Consent Decree to settle claims in 2008.
- Reviewed and assisted interested parties prepare comments on proposed Kentucky air toxic regulations at 401 KAR 64:005, 64:010, 64:020, and 64:030 (June 2007).
- Prepared comments on proposed Standards of Performance for Electric Utility Steam Generating Units and Small Industrial-Commercial-Industrial Steam Generating Units, 70 FR 9706 (February 28, 2005).
- Prepared comments on Louisville Air Pollution Control District proposed Strategic Toxic Air Reduction regulations.
- Prepared comments and analysis of BAAQMD Regulation, Rule 11, Flare Monitoring at Petroleum Refineries.
- Prepared comments on Proposed National Emission Standards for Hazardous Air Pollutants; and, in the Alternative, Proposed Standards of Performance for New and Existing Stationary Sources: Electricity Utility Steam Generating Units (MACT standards for coal-fired power plants).
- Prepared Authority to Construct Permit for remediation of a large petroleum-contaminated site on the California Central Coast. Negotiated conditions with agencies and secured permits.

- Prepared Authority to Construct Permit for remediation of a former oil field on the California Central Coast. Participated in negotiations with agencies and secured permits.
- Prepared and/or reviewed hundreds of environmental permits, including NPDES, UIC, Stormwater, Authority to Construct, Prevention of Significant Deterioration, Nonattainment New Source Review, Title V, and RCRA, among others.
- Participated in the development of the CARB document, *Guidance for Power Plant Siting and Best Available Control Technology*, including attending public workshops and filing technical comments.
- Performed data analyses in support of adoption of emergency power restoration standards by the California Public Utilities Commission for "major" power outages, where major is an outage that simultaneously affects 10% of the customer base.
- Drafted portions of the Good Neighbor Ordinance to grant Contra Costa County greater authority over safety of local industry, particularly chemical plants and refineries.
- Participated in drafting BAAQMD Regulation 8, Rule 28, Pressure Relief Devices, including participation in public workshops, review of staff reports, draft rules and other technical materials, preparation of technical comments on staff proposals, research on availability and costs of methods to control PRV releases, and negotiations with staff.
- Participated in amending BAAQMD Regulation 8, Rule 18, Valves and Connectors, including participation in public workshops, review of staff reports, proposed rules and other supporting technical material, preparation of technical comments on staff proposals, research on availability and cost of low-leak technology, and negotiations with staff.
- Participated in amending BAAQMD Regulation 8, Rule 25, Pumps and Compressors, including participation in public workshops, review of staff reports, proposed rules, and other supporting technical material, preparation of technical comments on staff proposals, research on availability and costs of low-leak and seal-less technology, and negotiations with staff.
- Participated in amending BAAQMD Regulation 8, Rule 5, Storage of Organic Liquids, including participation in public workshops, review of staff reports, proposed rules, and other supporting technical material, preparation of technical comments on staff proposals, research on availability and costs of controlling tank emissions, and presentation of testimony before the Board.
- Participated in amending BAAQMD Regulation 8, Rule 18, Valves and Connectors at Petroleum Refinery Complexes, including participation in public workshops, review of staff reports, proposed rules and other supporting technical material, preparation of technical comments on staff proposals, research on availability and costs of low-leak technology, and presentation of testimony before the Board.

- Participated in amending BAAQMD Regulation 8, Rule 22, Valves and Flanges at Chemical Plants, etc, including participation in public workshops, review of staff reports, proposed rules, and other supporting technical material, preparation of technical comments on staff proposals, research on availability and costs of low-leak technology, and presentation of testimony before the Board.
- Participated in amending BAAQMD Regulation 8, Rule 25, Pump and Compressor Seals, including participation in public workshops, review of staff reports, proposed rules, and other supporting technical material, preparation of technical comments on staff proposals, research on availability of low-leak technology, and presentation of testimony before the Board.
- Participated in the development of the BAAQMD Regulation 2, Rule 5, Toxics, including participation in public workshops, review of staff proposals, and preparation of technical comments.
- Participated in the development of SCAQMD Rule 1402, Control of Toxic Air Contaminants from Existing Sources, and proposed amendments to Rule 1401, New Source Review of Toxic Air Contaminants, in 1993, including review of staff proposals and preparation of technical comments on same.
- Participated in the development of the Sunnyvale Ordinance to Regulate the Storage, Use and Handling of Toxic Gas, which was designed to provide engineering controls for gases that are not otherwise regulated by the Uniform Fire Code.
- Participated in the drafting of the Statewide Water Quality Control Plans for Inland Surface Waters and Enclosed Bays and Estuaries, including participation in workshops, review of draft plans, preparation of technical comments on draft plans, and presentation of testimony before the SWRCB.
- Participated in developing Se permit effluent limitations for the five Bay Area refineries, including review of staff proposals, statistical analyses of Se effluent data, review of literature on aquatic toxicity of Se, preparation of technical comments on several staff proposals, and presentation of testimony before the Bay Area RWQCB.
- Represented the California Department of Water Resources in the 1991 Bay-Delta Hearings before the State Water Resources Control Board, presenting sworn expert testimony with cross examination and rebuttal on a striped bass model developed by the California Department of Fish and Game.
- Represented the State Water Contractors in the 1987 Bay-Delta Hearings before the State Water Resources Control Board, presenting sworn expert testimony with cross examination and rebuttal on natural flows, historical salinity trends in San Francisco Bay, Delta outflow, and hydrodynamics of the South Bay.
- Represented interveners in the licensing of over 20 natural-gas-fired power plants and one coal gasification plant at the California Energy Commission and elsewhere. Reviewed and

prepared technical comments on applications for certification, preliminary staff assessments, final staff assessments, preliminary determinations of compliance, final determinations of compliance, and prevention of significant deterioration permits in the areas of air quality, water supply, water quality, biology, public health, worker safety, transportation, site contamination, cooling systems, and hazardous materials. Presented written and oral testimony in evidentiary hearings with cross examination and rebuttal. Participated in technical workshops.

- Represented several parties in the proposed merger of San Diego Gas & Electric and Southern California Edison. Prepared independent technical analyses on health risks, air quality, and water quality. Presented written and oral testimony before the Public Utilities Commission administrative law judge with cross examination and rebuttal.
- Represented a PRP in negotiations with local health and other agencies to establish impact of subsurface contamination on overlying residential properties. Reviewed health studies prepared by agency consultants and worked with agencies and their consultants to evaluate health risks.

WATER QUALITY/RESOURCES

- Directed and participated in research on environmental impacts of energy development in the Colorado River Basin, including contamination of surface and subsurface waters and modeling of flow and chemical transport through fractured aquifers.
- Played a major role in Northern California water resource planning studies since the early 1970s. Prepared portions of the Basin Plans for the Sacramento, San Joaquin, and Delta basins including sections on water supply, water quality, beneficial uses, waste load allocation, and agricultural drainage. Developed water quality models for the Sacramento and San Joaquin Rivers.
- Conducted hundreds of studies over the past 40 years on Delta water supplies and the impacts of exports from the Delta on water quality and biological resources of the Central Valley, Sacramento-San Joaquin Delta, and San Francisco Bay. Typical examples include:
    1. Evaluate historical trends in salinity, temperature, and flow in San Francisco Bay and upstream rivers to determine impacts of water exports on the estuary;
    2. Evaluate the role of exports and natural factors on the food web by exploring the relationship between salinity and primary productivity in San Francisco Bay, upstream rivers, and ocean;
    3. Evaluate the effects of exports, other in-Delta, and upstream factors on the abundance of salmon and striped bass;
    4. Review and critique agency fishery models that link water exports with the abundance of striped bass and salmon;

5. Develop a model based on GLMs to estimate the relative impact of exports, water facility operating variables, tidal phase, salinity, temperature, and other variables on the survival of salmon smolts as they migrate through the Delta;
6. Reconstruct the natural hydrology of the Central Valley using water balances, vegetation mapping, reservoir operation models to simulate flood basins, precipitation records, tree ring research, and historical research;
7. Evaluate the relationship between biological indicators of estuary health and down-estuary position of a salinity surrogate (X2);
8. Use real-time fisheries monitoring data to quantify impact of exports on fish migration;
9. Refine/develop statistical theory of autocorrelation and use to assess strength of relationships between biological and flow variables;
10. Collect, compile, and analyze water quality and toxicity data for surface waters in the Central Valley to assess the role of water quality in fishery declines;
11. Assess mitigation measures, including habitat restoration and changes in water project operation, to minimize fishery impacts;
12. Evaluate the impact of unscreened agricultural water diversions on abundance of larval fish;
13. Prepare and present testimony on the impacts of water resources development on Bay hydrodynamics, salinity, and temperature in water rights hearings;
14. Evaluate the impact of boat wakes on shallow water habitat, including interpretation of historical aerial photographs;
15. Evaluate the hydrodynamic and water quality impacts of converting Delta islands into reservoirs;
16. Use a hydrodynamic model to simulate the distribution of larval fish in a tidally influenced estuary;
17. Identify and evaluate non-export factors that may have contributed to fishery declines, including predation, shifts in oceanic conditions, aquatic toxicity from pesticides and mining wastes, salinity intrusion from channel dredging, loss of riparian and marsh habitat, sedimentation from upstream land alternations, and changes in dissolved oxygen, flow, and temperature below dams.

- Developed, directed, and participated in a broad-based research program on environmental issues and control technology for energy industries including petroleum, oil shale, coal

mining, and coal slurry transport. Research included evaluation of air and water pollution, development of novel, low-cost technology to treat and dispose of wastes, and development and application of geohydrologic models to evaluate subsurface contamination from in-situ retorting. The program consisted of government and industry contracts and employed 45 technical and administrative personnel.

- Coordinated an industry task force established to investigate the occurrence, causes, and solutions for corrosion/erosion and mechanical/engineering failures in the waterside systems (e.g., condensers, steam generation equipment) of power plants. Corrosion/erosion failures caused by water and steam contamination that were investigated included waterside corrosion caused by poor microbiological treatment of cooling water, steam-side corrosion caused by ammonia-oxygen attack of copper alloys, stress-corrosion cracking of copper alloys in the air cooling sections of condensers, tube sheet leaks, oxygen in-leakage through condensers, volatilization of silica in boilers and carry over and deposition on turbine blades, and iron corrosion on boiler tube walls. Mechanical/engineering failures investigated included: steam impingement attack on the steam side of condenser tubes, tube-to-tube-sheet joint leakage, flow-induced vibration, structural design problems, and mechanical failures due to stresses induced by shutdown, startup and cycling duty, among others. Worked with electric utility plant owners/operators, condenser and boiler vendors, and architect/engineers to collect data to document the occurrence of and causes for these problems, prepared reports summarizing the investigations, and presented the results and participated on a committee of industry experts tasked with identifying solutions to prevent condenser failures.
- Evaluated the cost effectiveness and technical feasibility of using dry cooling and parallel dry-wet cooling to reduce water demands of several large natural-gas fired power plants in California and Arizona.
- Designed and prepared cost estimates for several dry cooling systems (e.g., fin fan heat exchangers) used in chemical plants and refineries.
- Designed, evaluated, and costed several zero liquid discharge systems for power plants.
- Evaluated the impact of agricultural and mining practices on surface water quality of Central Valley steams. Represented municipal water agencies on several federal and state advisory committees tasked with gathering and assessing relevant technical information, developing work plans, and providing oversight of technical work to investigate toxicity issues in the watershed.

AIR QUALITY/PUBLIC HEALTH

- Prepared or reviewed the air quality and public health sections of hundreds of EIRs and EISs on a wide range of industrial, commercial and residential projects.
- Prepared or reviewed hundreds of NSR and PSD permits for a wide range of industrial facilities.

- Designed, implemented, and directed a 2-year-long community air quality monitoring program to assure that residents downwind of a petroleum-contaminated site were not impacted during remediation of petroleum-contaminated soils. The program included real-time monitoring of particulates, diesel exhaust, and BTEX and time integrated monitoring for over 100 chemicals.
- Designed, implemented, and directed a 5-year long source, industrial hygiene, and ambient monitoring program to characterize air emissions, employee exposure, and downwind environmental impacts of a first-generation shale oil plant. The program included stack monitoring of heaters, boilers, incinerators, sulfur recovery units, rock crushers, API separator vents, and wastewater pond fugitives for arsenic, cadmium, chlorine, chromium, mercury, 15 organic indicators (e.g., quinoline, pyrrole, benzo(a)pyrene, thiophene, benzene), sulfur gases, hydrogen cyanide, and ammonia. In many cases, new methods had to be developed or existing methods modified to accommodate the complex matrices of shale plant gases.
- Conducted investigations on the impact of diesel exhaust from truck traffic from a wide range of facilities including mines, large retail centers, light industrial uses, and sports facilities. Conducted traffic surveys, continuously monitored diesel exhaust using an aethalometer, and prepared health risk assessments using resulting data.
- Conducted indoor air quality investigations to assess exposure to natural gas leaks, pesticides, molds and fungi, soil gas from subsurface contamination, and outgasing of carpets, drapes, furniture and construction materials. Prepared health risk assessments using collected data.
- Prepared health risk assessments, emission inventories, air quality analyses, and assisted in the permitting of over 70 1 to 2 MW emergency diesel generators.
- Prepare over 100 health risk assessments, endangerment assessments, and other health-based studies for a wide range of industrial facilities.
- Developed methods to monitor trace elements in gas streams, including a continuous real-time monitor based on the Zeeman atomic absorption spectrometer, to continuously measure mercury and other elements.
- Performed nuisance investigations (odor, noise, dust, smoke, indoor air quality, soil contamination) for businesses, industrial facilities, and residences located proximate to and downwind of pollution sources.

PUBLICATIONS AND PRESENTATIONS (Partial List - Representative Publications)

J.P. Fox, T.P. Rose, and T.L. Sawyer, Isotope Hydrology of a Spring-fed Waterfall in Fractured Volcanic Rock, 2007.

C.E. Lambert, E.D. Winegar, and Phyllis Fox, Ambient and Human Sources of Hydrogen Sulfide: An Explosive Topic, Air & Waste Management Association, June 2000, Salt Lake City, UT.

San Luis Obispo County Air Pollution Control District and San Luis Obispo County Public Health Department, *Community Monitoring Program*, February 8, 1999.

The Bay Institute, *From the Sierra to the Sea. The Ecological History of the San Francisco Bay-Delta Watershed*, 1998.

J. Phyllis Fox, *Well Interference Effects of HDPP's Proposed Wellfield in the Victor Valley Water District*, Prepared for the California Unions for Reliable Energy (CURE), October 12, 1998.

J. Phyllis Fox, *Air Quality Impacts of Using CPVC Pipe in Indoor Residential Potable Water Systems*, Report Prepared for California Pipe Trades Council, California Firefighters Association, and other trade associations, August 29, 1998.

J. Phyllis Fox and others, *Authority to Construct Avila Beach Remediation Project*, Prepared for Unocal Corporation and submitted to San Luis Obispo Air Pollution Control District, June 1998.

J. Phyllis Fox and others, *Authority to Construct Former Guadalupe Oil Field Remediation Project*, Prepared for Unocal Corporation and submitted to San Luis Obispo Air Pollution Control District, May 1998.

J. Phyllis Fox and Robert Sears, *Health Risk Assessment for the Metropolitan Oakland International Airport Proposed Airport Development Program*, Prepared for Plumbers & Steamfitters U.A. Local 342, December 15, 1997.

Levine-Fricke-Recon (Phyllis Fox and others), *Preliminary Endangerment Assessment Work Plan for the Study Area Operable Unit, Former Solano County Sanitary Landfill, Benicia, California*, Prepared for Granite Management Co. for submittal to DTSC, September 26, 1997.

Phyllis Fox and Jeff Miller, "Fathead Minnow Mortality in the Sacramento River," *IEP Newsletter*, v. 9, n. 3, 1996.

Jud Monroe, Phyllis Fox, Karen Levy, Robert Nuzum, Randy Bailey, Rod Fujita, and Charles Hanson, *Habitat Restoration in Aquatic Ecosystems. A Review of the Scientific Literature Related to the Principles of Habitat Restoration*, Part Two, Metropolitan Water District of Southern California (MWD) Report, 1996.

Phyllis Fox and Elaine Archibald, *Aquatic Toxicity and Pesticides in Surface Waters of the Central Valley*, California Urban Water Agencies (CUWA) Report, September 1997.

Phyllis Fox and Alison Britton, *Evaluation of the Relationship Between Biological Indicators and the Position of X2*, CUWA Report, 1994.

Phyllis Fox and Alison Britton, *Predictive Ability of the Striped Bass Model*, WRINT DWR-206, 1992.

J. Phyllis Fox, *An Historical Overview of Environmental Conditions at the North Canyon Area of the Former Solano County Sanitary Landfill*, Report Prepared for Solano County Department of Environmental Management, 1991.

J. Phyllis Fox, *An Historical Overview of Environmental Conditions at the East Canyon Area of the Former Solano County Sanitary Landfill*, Report Prepared for Solano County Department of Environmental Management, 1991.

Phyllis Fox, *Trip 2 Report, Environmental Monitoring Plan, Parachute Creek Shale Oil Program*, Unocal Report, 1991.

J. P. Fox and others, "Long-Term Annual and Seasonal Trends in Surface Salinity of San Francisco Bay," *Journal of Hydrology*, v. 122, p. 93-117, 1991.

J. P. Fox and others, "Reply to Discussion by D.R. Helsel and E.D. Andrews on Trends in Freshwater Inflow to San Francisco Bay from the Sacramento-San Joaquin Delta," *Water Resources Bulletin*, v. 27, no. 2, 1991.

J. P. Fox and others, "Reply to Discussion by Philip B. Williams on Trends in Freshwater Inflow to San Francisco Bay from the Sacramento-San Joaquin Delta," *Water Resources Bulletin*, v. 27, no. 2, 1991.

J. P. Fox and others, "Trends in Freshwater Inflow to San Francisco Bay from the Sacramento-San Joaquin Delta," *Water Resources Bulletin*, v. 26, no. 1, 1990.

J. P. Fox, "Water Development Increases Freshwater Flow to San Francisco Bay," *SCWC Update*, v. 4, no. 2, 1988.

J. P. Fox, *Freshwater Inflow to San Francisco Bay Under Natural Conditions*, State Water Contracts, Exhibit 262, 58 pp., 1987.

J. P. Fox, "The Distribution of Mercury During Simulated In-Situ Oil Shale Retorting," *Environmental Science and Technology*, v. 19, no. 4, pp. 316-322, 1985.

J. P. Fox, "El Mercurio en el Medio Ambiente: Aspectos Referentes al Peru," (Mercury in the Environment: Factors Relevant to Peru) Proceedings of Simposio Los Pesticidas y el Medio Ambiente," ONERN-CONCYTEC, Lima, Peru, April 25-27, 1984. (Also presented at Instituto Tecnologico Pesquero and Instituto del Mar del Peru.)

J. P. Fox, "Mercury, Fish, and the Peruvian Diet," *Boletin de Investigacion*, Instituto Tecnologico Pesquero, Lima, Peru, v. 2, no. 1, pp. 97-116, l984.

J. P. Fox, P. Persoff, A. Newton, and R. N. Heistand, "The Mobility of Organic Compounds in a Codisposal System," *Proceedings of the Seventeenth Oil Shale Symposium*, Colorado School of Mines Press, Golden, CO, 1984.

P. Persoff and J. P. Fox, "Evaluation of Control Technology for Modified In-Situ Oil Shale Retorts," *Proceedings of the Sixteenth Oil Shale Symposium*, Colorado School of Mines Press, Golden, CO, 1983.

J. P. Fox, *Leaching of Oil Shale Solid Wastes: A Critical Review*, University of Colorado Report, 245 pp., July 1983.

J. P. Fox, *Source Monitoring for Unregulated Pollutants from the White River Oil Shale Project*, VTN Consolidated Report, June 1983.

A. S. Newton, J. P. Fox, H. Villarreal, R. Raval, and W. Walker II, *Organic Compounds in Coal Slurry Pipeline Waters*, Lawrence Berkeley Laboratory Report LBL-15121, 46 pp., Sept. 1982.

M. Goldstein et al., *High Level Nuclear Waste Standards Analysis, Regulatory Framework Comparison*, Battelle Memorial Institute Report No. BPMD/82/E515-06600/3, Sept. 1982.

J. P. Fox et al., *Literature and Data Search of Water Resource Information of the Colorado, Utah, and Wyoming Oil Shale Basins*, Vols. 1-12, Bureau of Land Management, 1982.

A. T. Hodgson, M. J. Pollard, G. J. Harris, D. C. Girvin, J. P. Fox, and N. J. Brown, *Mercury Mass Distribution During Laboratory and Simulated In-Situ Retorting*, Lawrence Berkeley Laboratory Report LBL-12908, 39 pp., Feb. 1982.

E. J. Peterson, A. V. Henicksman, J. P. Fox, J. A. O'Rourke, and P. Wagner, *Assessment and Control of Water Contamination Associated with Shale Oil Extraction and Processing*, Los Alamos National Laboratory Report LA-9084-PR, 54 pp., April 1982.

P. Persoff and J. P. Fox, *Control Technology for In-Situ Oil Shale Retorts*, Lawrence Berkeley Laboratory Report LBL-14468, 118 pp., Dec. 1982.

J. P. Fox, *Codisposal Evaluation: Environmental Significance of Organic Compounds*, Development Engineering Report, 104 pp., April 1982.

J. P. Fox, *A Proposed Strategy for Developing an Environmental Water Monitoring Plan for the Paraho-Ute Project*, VTN Consolidated Report, Sept. 1982.

J. P. Fox, D. C. Girvin, and A. T. Hodgson, "Trace Elements in Oil Shale Materials," *Energy and Environmental Chemistry, Fossil Fuels*, v.1, pp. 69-101, 1982.

M. Mehran, T. N. Narasimhan, and J. P. Fox, "Hydrogeologic Consequences of Modified In-situ Retorting Process, Piceance Creek Basin, Colorado," *Proceedings of the Fourteenth Oil Shale Symposium*, Colorado School of Mines Press, Golden, CO, 1981 (LBL-12063).

U. S. DOE (J. P. Fox and others), *Western Oil Shale Development: A Technology Assessment*, v. 1-9, Pacific Northwest Laboratory Report PNL-3830, 1981.

J. P. Fox (ed), "Oil Shale Research," Chapter from the *Energy and Environment Division Annual Report 1980*, Lawrence Berkeley Laboratory Report LBL-11989, 82 pp., 1981 (author or co-author of four articles in report).

J. P. Fox, *The Partitioning of Major, Minor, and Trace Elements during In-Situ Oil Shale Retorting*, Ph.D. Dissertation, U. of Ca., Berkeley, also Report LBL-9062, 441 pp., 1980 (*Diss. Abst. Internat.*, v. 41, no. 7, 1981).

J.P. Fox, "Elemental Composition of Simulated *In Situ* Oil Shale Retort Water," *Analysis of Waters Associated with Alternative Fuel Production, ASTM STP 720*, L.P. Jackson and C.C. Wright, Eds., American Society for Testing and Materials, pp. 101-128, 1981.

J. P. Fox, P. Persoff, P. Wagner, and E. J. Peterson, "Retort Abandonment -- Issues and Research Needs," in *Oil Shale: the Environmental Challenges*, K. K. Petersen (ed.), p. 133, 1980 (Lawrence Berkeley Laboratory Report LBL-11197).

J. P. Fox and T. E. Phillips, "Wastewater Treatment in the Oil Shale Industry," in *Oil Shale: the Environmental Challenges*, K. K. Petersen (ed.), p. 253, 1980 (Lawrence Berkeley Laboratory Report LBL-11214).

R. D. Giauque, J. P. Fox, J. W. Smith, and W. A. Robb, "Geochemical Studies of Two Cores from the Green River Oil Shale Formation," *Transactions*, American Geophysical Union, v. 61, no. 17, 1980.

J. P. Fox, "The Elemental Composition of Shale Oils," Abstracts of Papers, 179th National Meeting, ISBN 0-8412-0542-6, Abstract No. FUEL 17, 1980.

J. P. Fox and P. Persoff, "Spent Shale Grouting of Abandoned In-Situ Oil Shale Retorts," *Proceedings of Second U.S. DOE Environmental Control Symposium*, CONF-800334/1, 1980 (Lawrence Berkeley Laboratory Report LBL-10744).

P. K. Mehta, P. Persoff, and J. P. Fox, "Hydraulic Cement Preparation from Lurgi Spent Shale," *Proceedings of the Thirteenth Oil Shale Symposium*, Colorado School of Mines Press, Golden, CO, 1980 (Lawrence Berkeley Laboratory Report LBL-11071).

F. E. Brinckman, K. L. Jewett, R. H. Fish, and J. P. Fox, "Speciation of Inorganic and Organoarsenic Compounds in Oil Shale Process Waters by HPLC Coupled with Graphite Furnace Atomic Absorption (GFAA) Detectors," Abstracts of Papers, Div. of Geochemistry, Paper No. 20, Second Chemical Congress of the North American Continent, August 25-28, 1980, Las Vegas (1980).

J. P. Fox, D. E. Jackson, and R. H. Sakaji, "Potential Uses of Spent Shale in the Treatment of Oil Shale Retort Waters," *Proceedings of the Thirteenth Oil Shale Symposium*, Colorado School of Mines Press, Golden, CO, 1980 (Lawrence Berkeley Laboratory Report LBL-11072).

J. P. Fox, *The Elemental Composition of Shale Oils*, Lawrence Berkeley Laboratory Report LBL-10745, 1980.

R. H. Fish, J. P. Fox, F. E. Brinckman, and K. L. Jewett, *Fingerprinting Inorganic and Organoarsenic Compounds in Oil Shale Process Waters Using a Liquid Chromatograph Coupled with an Atomic Absorption Detector*, Lawrence Berkeley Laboratory Report LBL-11476, 1980.

National Academy of Sciences (J. P. Fox and others), *Surface Mining of Non-Coal Minerals, Appendix II: Mining and Processing of Oil Shale and Tar Sands*, 222 pp., 1980.

J. P. Fox, "Elemental Composition of Simulated In-Situ Oil Shale Retort Water," in *Analysis of Waters Associated with Alternative Fuel Production*, ASTM STP 720, L. P. Jackson and C. C. Wright (eds.), American Society for Testing and Materials, pp. 101-128, 1980.

R. D. Giauque, J. P. Fox, and J. W. Smith, *Characterization of Two Core Holes from the Naval Oil Shale Reserve Number 1*, Lawrence Berkeley Laboratory Report LBL-10809, 176 pp., December 1980.

B. M. Jones, R. H. Sakaji, J. P. Fox, and C. G. Daughton, "Removal of Contaminative Constituents from Retort Water: Difficulties with Biotreatment and Potential Applicability of Raw and Processed Shales," *EPA/DOE Oil Shale Wastewater Treatability Workshop*, December 1980 (Lawrence Berkeley Laboratory Report LBL-12124).

J. P. Fox, *Water-Related Impacts of In-Situ Oil Shale Processing*, Lawrence Berkeley Laboratory Report LBL-6300, 327 p., December 1980.

M. Mehran, T. N. Narasimhan, and J. P. Fox, *An Investigation of Dewatering for the Modified In-Situ Retorting Process, Piceance Creek Basin, Colorado*, Lawrence Berkeley Laboratory Report LBL-11819, 105 p., October 1980.

J. P. Fox (ed.) "Oil Shale Research," Chapter from the *Energy and Environment Division Annual Report 1979*, Lawrence Berkeley Laboratory Report LBL-10486, 1980 (author or coauthor of eight articles).

E. Ossio and J. P. Fox, *Anaerobic Biological Treatment of In-Situ Oil Shale Retort Water*, Lawrence Berkeley Laboratory Report LBL-10481, March 1980.

J. P. Fox, F. H. Pearson, M. J. Kland, and P. Persoff, *Hydrologic and Water Quality Effects and Controls for Surface and Underground Coal Mining -- State of Knowledge, Issues, and Research Needs*, Lawrence Berkeley Laboratory Report LBL-11775, 1980.

D. C. Girvin, T. Hadeishi, and J. P. Fox, "Use of Zeeman Atomic Absorption Spectroscopy for the Measurement of Mercury in Oil Shale Offgas," *Proceedings of the Oil Shale Symposium: Sampling, Analysis and Quality Assurance*, U.S. EPA Report EPA-600/9-80-022, March 1979 (Lawrence Berkeley Laboratory Report LBL-8888).

D. S. Farrier, J. P. Fox, and R. E. Poulson, "Interlaboratory, Multimethod Study of an In-Situ Produced Oil Shale Process Water," *Proceedings of the Oil Shale Symposium: Sampling, Analysis and Quality Assurance*, U.S. EPA Report EPA-600/9-80-022, March 1979 (Lawrence Berkeley Laboratory Report LBL-9002).

J. P. Fox, J. C. Evans, J. S. Fruchter, and T. R. Wildeman, "Interlaboratory Study of Elemental Abundances in Raw and Spent Oil Shales," *Proceedings of the Oil Shale Symposium: Sampling, Analysis and Quality Assurance*, U.S. EPA Report EPA-600/9-80-022, March 1979 (Lawrence Berkeley Laboratory Report LBL-8901).

J. P. Fox, "Retort Water Particulates," *Proceedings of the Oil Shale Symposium: Sampling, Analysis and Quality Assurance*, U.S. EPA Report EPA-600/9-80-022, March 1979 (Lawrence Berkeley Laboratory Report LBL-8829).

P. Persoff and J. P. Fox, "Control Strategies for In-Situ Oil Shale Retorts," *Proceedings of the Twelfth Oil Shale Symposium*, Colorado School of Mines Press, Golden, CO, 1979 (Lawrence Berkeley Laboratory Report LBL-9040).

J. P. Fox and D. L. Jackson, "Potential Uses of Spent Shale in the Treatment of Oil Shale Retort Waters," *Proceedings of the DOE Wastewater Workshop*, Washington, D. C., June 14-15, 1979 (Lawrence Berkeley Laboratory Report LBL-9716).

J. P. Fox, K. K. Mason, and J. J. Duvall, "Partitioning of Major, Minor, and Trace Elements during Simulated In-Situ Oil Shale Retorting," *Proceedings of the Twelfth Oil Shale Symposium*, Colorado School of Mines Press, Golden, CO, 1979 (Lawrence Berkeley Laboratory Report LBL-9030).

P. Persoff and J. P. Fox, *Control Strategies for Abandoned In-Situ Oil Shale Retorts*, Lawrence Berkeley Laboratory Report LBL-8780, 106 pp., October 1979.

D. C. Girvin and J. P. Fox, *On-Line Zeeman Atomic Absorption Spectroscopy for Mercury Analysis in Oil Shale Gases*, Environmental Protection Agency Report EPA-600/7-80-130, 95 p., August 1979 (Lawrence Berkeley Laboratory Report LBL-9702).

J. P. Fox, *Water Quality Effects of Leachates from an In-Situ Oil Shale Industry*, Lawrence Berkeley Laboratory Report LBL-8997, 37 pp., April 1979.

J. P. Fox (ed.), "Oil Shale Research," Chapter from the *Energy and Environment Division Annual Report 1978*, Lawrence Berkeley Laboratory Report LBL-9857 August 1979 (author or coauthor of seven articles).

J. P. Fox, P. Persoff, M. M. Moody, and C. J. Sisemore, "A Strategy for the Abandonment of Modified In-Situ Oil Shale Retorts," *Proceedings of the First U.S. DOE Environmental Control Symposium*, CONF-781109, 1978 (Lawrence Berkeley Laboratory Report LBL-6855).

E. Ossio, J. P. Fox, J. F. Thomas, and R. E. Poulson, "Anaerobic Fermentation of Simulated In-Situ Oil Shale Retort Water," *Division of Fuel Chemistry Preprints*, v. 23, no. 2, p. 202-213, 1978 (Lawrence Berkeley Laboratory Report LBL-6855).

J. P. Fox, J. J. Duvall, R. D. McLaughlin, and R. E. Poulson, "Mercury Emissions from a Simulated In-Situ Oil Shale Retort," *Proceedings of the Eleventh Oil Shale Symposium*, Colorado School of Mines Press, Golden, CO, 1978 (Lawrence Berkeley Laboratory Report LBL-7823).

J. P. Fox, R. D. McLaughlin, J. F. Thomas, and R. E. Poulson, "The Partitioning of As, Cd, Cu, Hg, Pb, and Zn during Simulated In-Situ Oil Shale Retorting," *Proceedings of the Tenth Oil Shale Symposium*, Colorado School of Mines Press, Golden, CO, 1977.

Bechtel, Inc., *Treatment and Disposal of Toxic Wastes*, Report Prepared for Santa Ana Watershed Planning Agency, 1975.

Bay Valley Consultants, *Water Quality Control Plan for Sacramento, Sacramento-San Joaquin and San Joaquin Basins*, Parts I and II and Appendices A-E, 750 pp., 1974.

POST GRADUATE COURSES
(Partial)

S-Plus Data Analysis, MathSoft, 6/94.
Air Pollutant Emission Calculations, UC Berkeley Extension, 6-7/94
Assessment, Control and Remediation of LNAPL Contaminated Sites, API and USEPA, 9/94
Pesticides in the TIE Process, SETAC, 6/96
Sulfate Minerals: Geochemistry, Crystallography, and Environmental Significance, Mineralogical Society of America/Geochemical Society, 11/00.
Design of Gas Turbine Combined Cycle and Cogeneration Systems, Thermoflow, 12/00
Air-Cooled Steam Condensers and Dry- and Hybrid-Cooling Towers, Power-Gen, 12/01
Combustion Turbine Power Augmentation with Inlet Cooling and Wet Compression, Power-Gen , 12/01
CEQA Update, UC Berkeley Extension, 3/02
The Health Effects of Chemicals, Drugs, and Pollutants, UC Berkeley Extension, 4-5/02
Noise Exposure Assessment: Sampling Strategy and Data Acquisition, AIHA PDC 205, 6/02
Noise Exposure Measurement Instruments and Techniques, AIHA PDC 302, 6/02
Noise Control Engineering, AIHA PDC 432, 6/02
Optimizing Generation and Air Emissions, Power-Gen, 12/02
Utility Industry Issues, Power-Gen, 12/02
Multipollutant Emission Control, Coal-Gen, 8/03
Community Noise, AIHA PDC 104, 5/04
Cutting-Edge Topics in Noise and Hearing Conservation, AIHA 5/04
Selective Catalytic Reduction: From Planning to Operation, Power-Gen, 12/05
Improving the FGD Decision Process, Power-Gen, 12/05
E-Discovery, CEB, 6/06
McIlvaine Hot Topic Hour, FGD Project Delay Factors, 8/10/06
McIlvaine Hot Topic Hour, What Mercury Technologies Are Available, 9/14/06
McIlvaine Hot Topic Hour, SCR Catalyst Choices, 10/12/06
McIlvaine Hot Topic Hour, Particulate Choices for Low Sulfur Coal, 10/19/06
McIlvaine Hot Topic Hour, Impact of PM2.5 on Power Plant Choices, 11/2/06
McIlvaine Hot Topic Hour, Dry Scrubbers, 11/9/06
Cost Estimating and Tricks of the Trade – A Practical Approach, PDH P159, 11/19/06
Process Equipment Cost Estimating by Ratio & Proportion, PDH G127 11/19/06
Power Plant Air Quality Decisions, Power-Gen 11/06
McIlvaine Hot Topic Hour, WE Energies Hg Control Update, 1/12/07
Negotiating Permit Conditions, EEUC, 1/21/07
BACT for Utilities, EEUC, 1/21/07
McIlvaine Hot Topic Hour, Chinese FGD/SCR Program & Impact on World, 2/1/07
McIlvaine Hot Topic Hour, Mercury Control Cost & Performance, 2/15/07
McIlvaine Hot Topic Hour, Mercury CEMS, 4/12/07

Coal-to-Liquids – A Timely Revival, 9th Electric Power, 4/30/07
Advances in Multi-Pollutant and CO_2 Control Technologies, 9th Electric Power, 4/30/07
McIlvaine Hot Topic Hour, Measurement & Control of PM2.5, 5/17/07
McIlvaine Hot Topic Hour, Co-firing and Gasifying Biomass, 5/31/07
McIlvaine Hot Topic Hour, Mercury Cost and Performance, 6/14/07
Ethanol 101: Points to Consider When Building an Ethanol Plant, BBI International, 6/26/07
Low Cost Optimization of Flue Gas Desulfurization Equipment, Fluent, Inc., 7/6/07.
McIlvaine Hot Topic Hour, CEMS for Measurement of NH3, SO3, Low NOx, 7/12/07
McIlvaine Hot Topic Hour, Mercury Removal Status & Cost, 8/9/07
McIlvaine Hot Topic Hour, Filter Media Selection for Coal-Fired Boilers, 9/13/07
McIlvaine Hot Topic Hour, Catalyst Performance on NOx, SO3, Mercury, 10/11/07
PRB Coal Users Group, PRB 101, 12/4/07
McIlvaine Hot Topic Hour, Mercury Control Update, 10/25/07
Circulating Fluidized Bed Boilers, Their Operation, Control and Optimization, Power-Gen, 12/8/07
Renewable Energy Credits & Greenhouse Gas Offsets, Power-Gen, 12/9/07
Petroleum Engineering & Petroleum Downstream Marketing, PDH K117, 1/5/08
Estimating Greenhouse Gas Emissions from Manufacturing, PDH C191, 1/6/08
McIlvaine Hot Topic Hour, NOx Reagents, 1/17/08
McIlvaine Hot Topic Hour, Mercury Control, 1/31/08
McIlvaine Hot Topic Hour, Mercury Monitoring, 3/6/08
McIlvaine Hot Topic Hour, SCR Catalysts, 3/13/08
Argus 2008 Climate Policy Outlook, 3/26/08
Argus Pet Coke Supply and Demand 2008, 3/27/08
McIlvaine Hot Topic Hour, SO3 Issues and Answers, 3/27/08
McIlvaine Hot Topic Hour, Mercury Control, 4/24/08
McIlvaine Hot Topic Hour, Co-Firing Biomass, 5/1/08
McIlvaine Hot Topic Hour, Coal Gasification, 6/5/08
McIlvaine Hot Topic Hour, Spray Driers vs. CFBs, 7/3/08
McIlvaine Hot Topic Hour, Air Pollution Control Cost Escalation, 9/25/08
McIlvaine Hot Topic Hour, Greenhouse Gas Strategies for Coal Fired Power Plant Operators, 10/2/08
McIlvaine Hot Topic Hour, Mercury and Toxics Monitoring, 2/5/09
McIlvaine Hot Topic Hour, Dry Precipitator Efficiency Improvements, 2/12/09
McIlvaine Hot Topic Hour, Coal Selection & Impact on Emissions, 2/26/09
McIlvaine Hot Topic Hour, 98% Limestone Scrubber Efficiency, 7/9/09
McIlvaine Hot Topic Hour, Carbon Management Strategies and Technologies, 6/24/10
McIlvaine Hot Topic Hour, Gas Turbine O&M, 7/22/10

McIlvaine Hot Topic Hour, Industrial Boiler MACT – Impact and Control Options, March 10, 2011

McIlvaine Hot Topic Hour, Fuel Impacts on SCR Catalysts, June 30, 2011.
Interest Rates, PDH P204, 3/9/12
Mechanics Liens, PDHOnline, 2/24/13.
Understanding Concerns with Dry Sorbent Injection as a Coal Plant Pollution Control, Webinar #874-567-839 by Cleanenergy.Org, March 4, 2013
Webinar: Coal-to-Gas Switching: What You Need to Know to Make the Investment, sponsored by PennWell Power Engineering Magazine, March 14, 2013. Available at: https://event.webcasts.com/viewer/event.jsp?ei=1013472.

BEFORE THE
PIPELINE AND HAZARDOUS MATERIALS SAFETY ADMINISTRATION
U.S. DEPARTMENT OF TRANSPORTATION

Advance Notice of Proposed Rulemaking

Hazardous Materials:
Rail Petitions and Recommendations To Improve the
Safety of Railroad Tank Car Transportation

PHMSA-2012-0082 (HM-251)
Published: 78 Fed. Reg. 54,849 (Sept. 6, 2013)

Comments of the Natural Resources Defense Council,
Sierra Club and Oil Change International on behalf of

Earthjustice
ForestEthics
Public Citizen
Friends of the Earth
Spokane Riverkeeper
Columbia Riverkeeper
Puget Soundkeeper Alliance
Friends of Grays Harbor
Natural Resources Council of Maine
Benicia Good Neighbor Steering Committee
Community In-power and Development Association
Vermont Chapter of the Sierra Club
Audubon Society of New Hampshire

Submitted December 5, 2013

I. INTRODUCTION

These comments are submitted, in response to the above-captioned Advance Notice of Proposed Rulemaking by the Sierra Club, Oil Change International and the Natural Resources Defense Council on behalf of their millions of members and active supporters, and on behalf of Earthjustice, ForestEthics, Public Citizen, Friends of the Earth, Spokane Riverkeeper, Columbia Riverkeeper, Puget Soundkeeper Alliance, Friends of Grays Harbor, Natural Resources Council of Maine, Benicia Good Neighbor Steering Committee, Community In-power and Development

Analysis of the Potential Costs of Accidents/Spills Related to Crude by Rail

Prepared

by

Ian Goodman
Brigid Rowan

on behalf of
Oil Change International

Before the
Pipeline and Hazardous Materials Safety Administration
in the Context of
Hazardous Materials: Rail Petitions and Recommendations to Improve the Safety of Railroad Tank Car Transportation
Docket No. PHMSA-2012-0082 (HM-251)

the goodman group, ltd.
http://www.thegoodman.com/

November 8, 2013

Table of Contents

1. Introduction 1
2. Estimated Costs of the Crude by Rail Disaster at Lac-Mégantic 4
2.1. Description of Disaster 4
2.2. Costs and Sources of Cost Data 5
2.3. Relevance of Lac-Mégantic to Estimating the Costs of CBR Accidents/Spills 9
3. Estimated Costs of Enbridge's Line 6B Spill in Marshall, MI 11
3.1. Description of Disaster 11
3.2. Costs and Sources of Cost Data 13
3.3. Relevance of Marshall, MI to Estimating the Costs of CBR Accidents/Spills 13
4. Conclusion 16

1. Introduction

This analysis was prepared by The Goodman Group, Ltd. (TGG), a consulting firm specializing in energy and regulatory economics,[1] on behalf of Oil Change International. Any findings, conclusions or opinions are those of TGG and the authors and do not necessarily reflect those of Oil Change International.

The costs of crude by rail (CBR) accidents/spills can be very large. This analysis demonstrates that a major crude by rail (CBR) unit train accident/spill could cost $1 billion or more for a single event.

The following examples provide key support for our findings:

1. The explosion, fire and spill of Bakken crude from a train derailment in Lac-Mégantic, QC (2013): The Lac-Mégantic rail accident/spill will likely have costs in the order of $500 million to $1 billion. Costs/damages for a similar incident could have been substantially higher had it occurred in a more populated area. Lac-Mégantic is also relevant in that it shows how an accident involving highly flammable light crude (such as the Bakken crude) can have devastating consequences even in a small town in terms of loss of human life and widespread explosion and fire damage to surrounding property.

2. The spill of tar sands dilbit[2] from Enbridge's Line 6B in Marshall, MI (2010): This rupture had costs of about $1 billion for Enbridge. The spill volumes at Marshall were within the range of the amount of spill possible (and, in fact, substantially less than the maximum spill) if a crude by rail unit train released much of its cargo. Costs/damages for similar incident could have also been substantially higher had it occurred in a more populated area. Marshall is also relevant in

[1] www.thegoodman.com This analysis was co-authored by Ian Goodman and Brigid Rowan.
[2] Diluted bitumen. Raw bitumen (a very heavy asphalt-like crude produced from the Alberta tar sands) is diluted for the purposes of rail and pipeline transport. Bitumen is transported in various forms, including a) SCO (raw bitumen upgraded to light synthetic crude oil), b) raw bitumen mixed with a petroleum-based diluent (such as naphtha or condensate) to make it less viscous, or c) raw bitumen (no diluent). SCO and dilbit (diluted bitumen to pipeline specifications, 25–30% diluent) can be transported in standard (non-coiled and non-insulated) tank cars and pipelines. Railbit (bitumen with 15–20% diluent) and raw bitumen can be transported in coiled and insulated tank cars (which are also sometimes used to transport dilbit). Keystone XL Draft Supplemental EIS, p. 1.4-49. Accessed October 30, 2013. http://keystonepipeline-xl.state.gov/documents/organization/205654.pdf

> showing the high potential cost of dilbit spills into water (and rail lines are often highly proximate to water).[3]

The AAR petition for rulemaking states:[4]

> AAR surveyed its members for information on derailments involving packing group I and II materials from '2004-2008. The derailments resulted in one fatality and eleven injuries, the release of approximately 925,000 gallons of these hazardous materials, and cleanup costs totaling approximately $63 million.

The Village of Barrington petition for rulemaking responds:[5]

> Furthermore, while AAR claims that derailment costs totaled approximately $64 million over the past five years, including equipment, lading, response and environmental remediation costs," [footnote 17 in original: March 9, 2011 Petition for Rulemaking letter to Dr. Magdy El-Sibae from Michael Rush of the Association of American Railroads at page 2, footnote 7.] Petitioners question the accuracy of industry's cost-benefit claims. In reviewing the derailment cost chart at Attachment B of AAR's petition, PHMSA should note that there is no apparent accounting for costs associated with civil litigation in the wake of derailments. However, in the Cherry Valley/Rockford derailment, CN paid over $36 million in October of 2011 to settle a lawsuit brought by the family of only one victim. AAR's chart, however, reflects costs of only $8 million for that incident. [footnote 18 in original: At the very least, Petitioners believe it would make sense for the PHMSA to ascertain the costs stemming from civil litigation for the entire list of derailments incidents that the AAR provided to your office on March 9, 2011. Even if it doesn't yet completely balance the cost-benefit equation in favor of public safety, Petitioners would guess that the plaintiffs' bar would look forward to securing ever higher awards for future victims of derailments based on the public record demonstrating that industry chose to do nothing meaningful in terms of investing in a retrofit program of tank cars that are known to be dangerous and that are increasingly serving as a rolling pipeline for the ethanol and crude oil industries.]

---

[3] The discussion of the costs of the Lac-Mégantic disaster and the Marshall, MI pipeline rupture is partly based on excerpts from a TGG report filed as written expert testimony at Canada's National Energy Board:
"The Relative Economic Costs and Benefits of the Line 9B Reversal and Line 9 Capacity Expansion," August 8, 2013, pp. 38-41. Accessed October 23, 2013.
https://www.neb-one.gc.ca/ll-eng/livelink.exe?func=ll&objId=985663&objAction=Open

[4] See http://www.regulations.gov/#!documentDetail;D=PHMSA-2012-0082-0005 p. 2. Accessed October 29, 2013.

[5] See http://www.regulations.gov/#!documentDetail;D=PHMSA-2012-0082-0006 p. 8. Accessed October 29, 2013.

In fact, even a single accident relating to a crude by rail unit train can have dramatically higher costs than the costs taken into account in the AAR's cost-benefit claims. As further explained in this briefing, this analysis will demonstrate that a major crude by rail unit train accident/spill, involving either dilbit or a very light crude such as Bakken, could cost $1 billion or more for a single event.

We have limited our cost analysis to environmental and socio-economic impacts that directly affect economic activity and can be somewhat readily (albeit approximately) quantified using market economics. These costs escalate very quickly in more densely populated urban areas. Moreover, as we have witnessed firsthand in Quebec, in summer 2013, unconventional crudes (such as Bakken and dilbit) have hazardous characteristics (notably flammability), such that their unsafe transport can result in the loss of human life. We have not attempted to assign a cost to potential effects on human health and safety or to broader effects on ecosystems (notably residual effects).[6]

As noted above, two relevant examples to support our findings that a single unit-train accident/spill could result in very large costs are the following:

1. the explosion, fire and spill of Bakken crude from a train derailment in Lac-Mégantic, QC (2013).
2. the spill of tar sands dilbit from Enbridge's Line 6B in Marshall, MI (2010).

For each example, TGG will provide:

1. description of the disaster;
2. the cost and sources of the cost data;
3. the relevance of the example to estimating the potential costs of CBR accidents/spills.

[6] Residual effects are those effects remaining after implementation of mitigation measures, such as emergency response and decontamination efforts.

2. Estimated Costs of the Crude by Rail Disaster at Lac-Mégantic

2.1. Description of Disaster

According to the Transportation Safety Board of Canada (TSB), "[o]n July 6 2013, a unit train carrying petroleum crude oil operated by Montreal, Maine & Atlantic Railway (MMA) derailed numerous cars in Lac-Mégantic, Quebec, and a fire and explosions ensued."[7]

The train with five locomotives was pulling 72 DOT-111 tanker cars full of light crude oil from the Bakken shale play in North Dakota to the Irving Oil refinery in Saint John, New Brunswick. The train was operated by Montreal Maine & Atlantic Railway. The train broke away and derailed, unleashing an explosive ball of burning Bakken crude, which incinerated the downtown core of this small Quebec town.[8]

Quebec's Department of Sustainable Development, Environment and Parks reports that this rail accident released 6.0 million litres[9] of crude oil into the environment (affecting soil, water and air).[10] Among its other findings (as of October 28, 2013):

> A total of 7.7 million litres[11] of crude oil were on the runaway MMA train
>
> from a total of 72 tankers, 63 spilled and 9 avoided spilling during the accident
>
> 43 million litres of oily water have been recovered from Lac-Mégantic's city centre (sewer system, lake, and grounds)
>
> 52,000 litres of oily water removed from the nearby Chaudière River

---

[7] See TSB website, Railway investigation R13D0054. Accessed October 29, 2013. http://www.bst-tsb.gc.ca/eng/enquetes-investigations/rail/2013/R13D0054/R13D0054.asp

[8] "Lac-Mégantic: What we know, what we don't," Montreal Gazette, July 22, 2013. Accessed August 2, 2013. http://www.montrealgazette.com/news/M%C3%A9gantic+What+know+what+know/8626661/story.html

[9] Equivalent to 1.6 million gallons.

[10] See Quebec Department of Sustainable Development, Environment and Parks website, Train Accident in Lac-Mégantic (content in French: *Ministère du Développement durable, de l'Environnement, de la Faune et des Parcs (MDDEFP), Accident ferroviaire à Lac-Mégantic*),.Accessed November 8, 2013 http://www.mddep.gouv.qc.ca/lac-megantic/index.htm; and specifically Summary Table on quantities of oil estimated as of October 28, 2013 (*Tableau-Synthèse: Estimation au 28 octobre 2013 des quantités de pétrole brut léger impliquées dans l'accident à Lac-Mégantic*) http://www.mddefp.gouv.qc.ca/lac-megantic/20131028-tableau-synthese-petrole.pdf

[11] Equivalent to 2.0 million gallons.

the oily water recovered has concentrations of oil ranging from 2% to 50%, and it is not possible to determine the exact amount of oil actually recovered.

"The catastrophe killed 47 residents and levelled more than 40 buildings." [12]

According to a September 11, 2013 TSB news release, "TSB test results indicate that the level of hazard posed by the petroleum crude oil transported in the tank cars on the accident train was not accurately documented." The crude was "offered for transport, packaged, and transported as a Class 3, PG III product, which represented it as a lower hazard, less volatile flammable liquid."[13]

2.2. Costs and Sources of Cost Data

The TSB investigation into the accident is still ongoing.[14] It is still too early to know the final costs for this disaster (including decontamination, town reconstruction, economic recovery, and compensation for victims' families); but **TGG estimates these costs to be in the hundreds of millions (in the order of $500 million to $1 billion)**.

Preliminary clean-up bills for damage to the town doubled in the weeks following the accident from $4 million to almost $8 million. The MM&A Railway stated at the end of July that it was unable to pay clean-up costs because it was not getting funds from its insurers. At the time, MM&A had outstanding bills for $7.8 million. MM&A also publicly raised the concern that it could go bankrupt.[15] In response, the Quebec government ordered World Fuel Services Corp. to assist with the clean-up. World Fuel "purchased the oil from producers in North Dakota's Bakken region, then leased and loaded rail

[12] McNish, Jacquie and Justin Giovanetti, "Oil Company Disputes Lac-Méganitc Cleanup Order," Globe and Mail. Accessed August 4. http://www.theglobeandmail.com/news/national/oil-company-disputes-lac-megantic-cleanup-order/article13518237/

[13] "TSB calls on Canadian and U.S. regulators to ensure properties of dangerous goods are accurately determined and documented for safe transportation," TSB News release, September 11, 2013. Accessed October 29, 2013. http://www.bst-tsb.gc.ca/eng/medias-media/communiques/rail/2013/r13d0054-20130911.asp
The news release further explains that this misclassification may partly explain why the crude ignited so quickly following the rupture.

[14] See the TSB active investigation page for Lac-Mégantic: http://www.bst-tsb.gc.ca/eng/enquetes-investigations/rail/2013/R13D0054/R13D0054.asp.

[15] Blatchford, Andy, "Railway says it can't pay for Lac-Mégantic disaster cleanup" http://www.theglobeandmail.com/news/national/mma-lays-off-nearly-one-third-of-quebec-workforce-union/article13496970/#dashboard/follows/

cars and arranged for their transport to an Irving Oil refinery in New Brunswick."[16] World Fuel is disputing the cleanup order.

> "In the end, says one expert in civil responsibility, taxpayers could be stuck with a bill in the hundreds of millions of dollars.
>
> Quebec law professor Daniel Gardner says he highly doubts MM&A has enough coverage to absorb the massive, combined financial liabilities of damages like environmental cleanup, emergency-crew salaries and lawsuits.
>
> In fact, he believes the Lac-Megantic derailment could have more financial consequences than any other land disaster in North American history.
>
> "The whole cost of this will be far closer to $1 billion than to $500 million," said the Universite Laval academic, adding he would be surprised if the railway had a total of $500 million in coverage.
>
> "What will probably happen? ...The company will go bankrupt, insurance coverage won't be enough."
>
> Gardner expects governments will wind up covering the difference.[17]

On August 7, 2013, MM&A filed for bankruptcy in both Canada (Quebec) and the US (Maine).[18]

> "It has become apparent that the obligations of both companies now exceed the value of their assets, including prospective insurance recoveries," MM&A chairman Edward Burkhardt said in a statement Wednesday.
>
> Filing for bankruptcy is "the best way to ensure fairness of treatment to all in these tragic circumstances," he said.
>
> The decision means the company will start a judge-supervised process to determine how much money will be paid to its various creditors. The process, which allows the company to tackle its unmanageable debt load and remain viable, can be lengthy and typically places secured creditors ahead of those seeking compensation through a lawsuit.

---

[16] See footnote 12.
[17] See footnote 15.
[18] Mackrael, Kim and Tu Thanh Ha, "MM&A files for creditor protection after Lac-Mégantic rail disaster" Globe and Mail. Accessed August 7. http://www.theglobeandmail.com/news/national/rail-company-involved-in-megantic-disaster-files-for-bankruptcy/article13644535/#dashboard/follows/

> MM&A's insurance provider, XL Group, has so far declined to cover the cleanup bills, leaving the province to step in and pay more than $8-million to ensure the work continues.
>
> The court documents indicate that XL has no plans to contribute to continuing environmental recovery costs because it has decided to prioritize claims from victims affected by the disaster. MM&A's insurance policy with XL covers the company for up to $25-million, according to the court documents.
>
> Because of the number of claims and the amounts being claimed, the insurer "cannot provide for payment of covered environmental cleanup costs to the detriment of the third-party claimants, especially where the amounts of the claims exceed the limit of the coverage," the documents state.

Based on the information provided above, the now bankrupt MM&A has liabilities in excess of assets, minimal insurance coverage ($25 million); and the insurer has so far refused to pay environmental cleanup costs.

Ongoing squabbling has recently intensified between Quebec and the Canadian federal government over who should pay for the clean-up, economic recovery and town reconstruction. Quebec is insisting that the federal government pitch in more than the $60M they have committed to. In the October 2013 Throne Speech, the federal government promised to help more with decontamination and reconstruction but have yet to commit to an exact amount.

The Quebec government has still not supplied the federal government with a cost estimate for the cleanup and reconstruction. Federal officials refuse to commit to a fixed amount without a final bill.[19]

While MM&A is bankrupt, some **$25 million** in derailment insurance policy is earmarked by the US bankruptcy trustee for the victim's families. There is a possibility that additional compensation could be obtained for the families from a second insurance policy or from the sale of the company's assets, but these amounts are uncertain.[20]

---

[19] The Globe and Mail, "Throne Speech to promise help with Lac-Mégantic cleanup, but not a 'blank cheque,' insiders say," October 15, 2013. http://www.theglobeandmail.com/news/politics/throne-speech-to-promise-help-with-lac-megantic-cleanup-but-not-a-blank-cheque-insiders-say/article14883079/#dashboard/follows/

[20] Montreal Gazette, "Quebec rail victims could begin to see compensation in mid-2014: U.S. trustee," October 22, 2013. http://www.montrealgazette.com/business/Quebec+rail+victims+could+begin+compensation+mid2014/9066861/story.html

Certainly, even individual victims of derailment have recently received compensation greater than $25 million,[21] therefore higher compensation, if available, would be justifiable.

On the **decontamination costs alone** there are a series of estimates:

- In late July 2013, a Quebec-based Ecotoxicologist, Emilien Pelletier, estimates that the bill just for decontamination would be **$500 million** and that doesn't include town reconstruction.[22]

- In early August 2013, MM&A was reported to have estimated the decontamination costs at **$200 million** in court documents.[23]

- In an October 2013 article, the Quebec government recently estimated the **soil decontamination costs alone at $150 million**.[24]

Overall costs estimates vary from several hundred million dollars to $1 billion:

- As indicated above, Quebec law professor, Daniel Gardner, estimated in August that the costs would far closer to **$1 billion than $500 million**.[25]

- In September 2013, the Toronto Star reported that cleanup costs are pegged as high as **$500 million by some estimates**.[26]

- On October 15, 2013, the Globe and Mail (Canada's National paper), indicated that "[e]xperts and government officials expect that **the bill will easily reach $200-million, and could even end up in the vicinity of $1-billion**."[27]

In light of the above, it would appear that the minimum decontamination costs would be $200 million and the minimum total costs (decontamination, town reconstruction and

---

[21] See footnote 5.
[22] See http://www.ledevoir.com/environnement/actualites-sur-l-environnement/383941/blanchet
[23] See http://www.theglobeandmail.com/news/national/quebec-could-still-be-on-hook-for-cleanup-bill/article13680378/#dashboard/follows/ and http://www.thestar.com/news/canada/2013/08/09/lac_megantic_cleanup_to_stretch_into_next_year.html
[24] See http://www.thestar.com/news/canada/2013/10/03/lacmegantic_ottawa_to_pitch_in_more_money_for_cleanup_of_train_derailment.html
[25] See footnote 15.
[26] See http://www.thestar.com/news/canada/2013/09/24/lac_megantic_cleanup_quebec_asks_federal_government_to_share_bill.html#
[27] See footnote 19.

economic recovery, and compensation for victims' families) would be approximately $500 million. The total bill could escalate to $1 billion and beyond. The updated information is consistent with TGG's August 2013 estimate from the NEB expert report:

"It is far too early to know the final costs for this disaster but they are estimated to be in the hundreds of millions, and possibly exceed $1 billion." [28]

2.3. Relevance of Lac-Mégantic to Estimating the Costs of CBR Accidents/Spills

The Lac-Mégantic tragedy is directly relevant to an estimation of the costs of a major CBR accident/spill for the following reasons:

1. It demonstrates the consequences of a CBR accident in a small town by a lake, thus proximate to people, water and economic activity.
2. The Lac-Mégantic tragedy demonstrates the effect of a rupture of 63 tank cars on a unit train with a total of 72 tankers, all carrying Bakken crude.
3. Bakken crude, which caused the explosion, is very light, and has hazardous characteristics (notably flammability).
4. Rail is now transporting over 600,000 barrels per day (and over 60% of the total) from Bakken production.[29]
5. More generally, the rapid expansion of CBR results from the rapid expansion in production and transport of unconventional crudes (Bakken and other light crudes from shale/tight oil plays and dilbit and other heavy crudes from Canadian tar sands).[30]

---

[28] See footnote 3, p. 39.

[29] See North Dakota Pipeline Authority website. Accessed October 30, 2013. http://northdakotapipelines.com/directors-cut/.
Monthly Updates for April 2013-October 2013 (February 2013-August 2013 data), reporting transport by rail ranging from 600,000 to 700,000 barrel per day, comprising 61-75% of total Bakken production.

[30] To date, a sizable proportion of overall recent CBR activity relates to Bakken production. The Keystone XL Draft Supplemental EIS (KXL DSEIS) assumes that CBR could be rapidly expanded to transport expanded Canadian tar sands production of dilbit and other heavy crudes, so as to provide a viable alternative to expanded pipeline capacity. The KXL DSEIS analysis of tar sands CBR is flawed and potentially misleading because it assumes that CBR can be quickly and vastly scaled up, with no significant operating, logistical, economic or regulatory constraints. Nonetheless, some Western Canadian production is already being transported by rail into the US (including dilbit, railbit, and raw bitumen, from both tar sands and non-tar sands), and there is a potential for further expansion of CBR transport of unconventional Canadian crudes.
See footnote 29; Titterton, Paul, Tank Car Update: Presentation to SWARS, February 28, 2013. Accessed October 30, 2013.
http://www.swrailshippers.com/swars_pdfs/2013_gatx_presentation.pdf;
(footnote continued on next page)

6. In addition to the devastation of the Lac-Mégantic town center, there has been significant release of crude oil (6.0 million liters or 1.6 million gallons) into the environment (affecting soil, water and air).[31]
7. There are very serious concerns about who will bear the financial responsibility for the disaster.

Although the Lac-Mégantic accident/spill was devastating and will likely have costs in the order of $500 million to $1 billion, it is nowhere near a worst-case scenario for a CBR accident.

Costs/damages for a similar incident could have been substantially higher had it occurred in a more populated area. Lac-Mégantic demonstrates how an accident involving highly flammable light crude (such as the Bakken crude) can have devastating consequences even in a small town in terms of loss of human life and widespread explosion and fire damage to surrounding property. In an urban area, the effects of such an accident could be catastrophic and costs could easily escalate to the multi-billion dollar range.[32]

(footnote continued from previous page)
Keystone XL Draft Supplemental EIS, pp. 1.4-33 – 1.4-60. Accessed October 30, 2013. http://keystonepipeline-xl.state.gov/documents/organization/205654.pdf;
Goodman, Ian and Brigid Rowan, Report evaluating the adequacy of the Keystone XL (KXL) Draft Supplemental Environmental Impact Statement (DSEIS) Market Analysis, April 22, 2013, pp. 33-50, Adobe pp. 267-284
http://switchboard.nrdc.org/blogs/aswift/Comments%20of%20Sierra%20Club%2C%20et.%20al.%2C%20on%20the%20Keystone%20XL%20DSEIS.4.22.13.pdf

[31] There have been concerns that the spill affected water quality and drinking water in Lac-Mégantic and nearby towns. Authorities continue to monitor water quality.
"Government Examining Lac-Mégantic Health Risks," The Record, July 31, 2013. Accessed August 2, 2013.
http://www.sherbrookerecord.com/content/gov%E2%80%99t-examining-lac-megantic-health-risks; see also footnote 10.

[32] In the context of the PHMSA rulemaking and elsewhere, some may submit that the Lac-Mégantic accident is an exceptional and possibly worst-case scenario that is unlikely to be repeated. And this particular accident certainly has some attributes that may be atypical or even unique. That said, this accident also occurred in a relatively small town. A similar explosion and fire in a more dense urban area could have had even worse consequences and higher costs. In an urban area, the particular factors in Lac-Mégantic (unattended train rolling down steep grades to crash at high speeds) may be far less likely to occur. On the other hand, in an urban area, there are other risk factors, such as increased danger of collisions with other trains (or other vehicles), as well as proximity to large populations and other infrastructure.

It may also be pointed out that the Lac-Mégantic accident occurred in Canada and that the estimated costs are in Canadian dollars. But in fact, the Lac-Mégantic accident is very relevant for the US. First, US and Canadian dollars now have similar value, so the cost estimates for Lac-Mégantic accident would be similar if presented in US dollars. Second, the accident occurred very close to the US border, on a train that had originated in the US (North Dakota), traveled through numerous US states and cities, and would have again passed through the US (Maine) on its intended routing between Quebec and New Brunswick.

3. Estimated Costs of Enbridge's Line 6B Spill in Marshall, MI

3.1. Description of Disaster

According to the NTSB, following its investigation of the Enbridge Line 6B Spill (emphasis added):[33]

> On Sunday, July 25, 2010, at about 5:58 p.m., a 30 inch-diameter pipeline (Line 6B) owned and operated by Enbridge Incorporated ruptured and spilled crude oil into an ecologically sensitive area near the Kalamazoo River in Marshall, Mich., for 17 hours until a local utility worker discovered the oil and contacted Enbridge to report the rupture.
>
> The NTSB found that the material failure of the pipeline was the result of multiple small corrosion-fatigue cracks that over time grew in size and linked together, creating a gaping breach in the pipe measuring over 80 inches long.
>
> "This investigation identified a complete breakdown of safety at Enbridge. Their employees performed like Keystone Kops and failed to recognize their pipeline had ruptured and continued to pump crude into the environment," said NTSB Chairman Deborah A.P. Hersman. "Despite multiple alarms and a loss of pressure in the pipeline, for more than 17 hours and through three shifts they failed to follow their own shutdown procedures."
>
> […]
>
> Over 840,000 gallons of crude oil - enough to fill 120 tanker trucks - spilled into hundreds of acres of Michigan wetlands, fouling a creek and a river. A Michigan Department of Community Health study concluded that over 300 individuals suffered adverse health effects related to benzene exposure, a toxic component of crude oil.
>
> Line 6B had been scheduled for a routine shutdown at the time of the rupture to accommodate changing delivery schedules. Following the shutdown, operators in the Enbridge control room in Edmonton, Alberta, received multiple alarms indicating a problem with low pressure in the pipeline, which were dismissed as

[33] NTSB Press Release, "Pipeline Rupture and Oil Spill Accident Caused by Organizational Failures and Weak Regulations," July 10, 2012. Accessed August 3, 2012. http://www.ntsb.gov/news/2012/120710.html

being caused by factors other than a rupture. "Inadequate training of control center personnel" was cited as contributing to the accident.

The investigation found that Enbridge failed to accurately assess the structural integrity of the pipeline, including correctly analyzing cracks that required repair. The NTSB characterized Enbridge's control room operations, leak detection, and environmental response as deficient, and described the event as an "organizational accident."

Following the first alarm, Enbridge controllers restarted Line 6B twice, pumping an additional 683,000 gallons of crude oil, or 81 percent of the total amount spilled, through the ruptured pipeline. The NTSB determined that if Enbridge's own procedures had been followed during the initial phases of the accident, the magnitude of the spill would have been significantly reduced. Further, the NTSB attributed systemic flaws in operational decision-making to a "culture of deviance," which concluded that personnel had a developed an operating culture in which not adhering to approved procedures and protocols was normalized.

The NTSB also cited the Pipeline and Hazardous Materials Safety Administration's weak regulations regarding pipeline assessment and repair criteria as well as a cursory review of Enbridge's oil spill response plan as contributing to the magnitude of the accident.

The investigation revealed that the cracks in Line 6B that ultimately ruptured were detected by Enbridge in 2005 but were not repaired. A further examination of records revealed that Enbridge's crack assessment process was inadequate, increasing the risk of a rupture.

"This accident is a wake-up call to the industry, the regulator, and the public. Enbridge knew for years that this section of the pipeline was vulnerable yet they didn't act on that information," said Chairman Hersman. "Likewise, for the regulator to delegate too much authority to the regulated to assess their own system risks and correct them is tantamount to the fox guarding the hen house. Regulators need regulations and practices with teeth, and the resources to enable them to take corrective action before a spill. Not just after."

As a result of the investigation, the NTSB reiterated one recommendation to PHMSA and issued 19 new safety recommendations to the Department of the Transportation, PHMSA, Enbridge Incorporated, the American Petroleum Institute, the International Association of Fire Chiefs, and the National Emergency Number Association.

3.2. Costs and Sources of Cost Data

As of March 31, 2013, Enbridge indicated in its First Quarter Interim Report to Shareholders that the total clean-up for the spill is now estimated to cost approximately $1 billion. Enbridge's civil penalty for the spill was only $3.7 million.[34] Enbridge also points out that there is a possibility that the clean-up bill will continue to increase as the clean-up is still ongoing.

No lives were lost, but as the NTSB citation above indicates: "over 300 individuals suffered adverse health effects related to benzene exposure, a toxic component of crude oil." Furthermore, "[o]ver 840,000 gallons of crude oil - enough to fill 120 tanker trucks - spilled into hundreds of acres of Michigan wetlands, fouling a creek and a river."

3.3. Relevance of Marshall, MI to Estimating the Costs of CBR Accidents/Spills

The Marshall, MI pipeline disaster is also highly relevant to an estimation of the costs of a major CBR accident/spill for the following reasons:

1. It demonstrates the costs of a dilbit spill in an environmentally sensitive area (with wetlands and proximity to waterways and human population) in a non-urban area.[35] Marshall, MI is not dissimilar to the many areas through which trains are also routed (along waterways in order to minimize elevation and through population centers throughout the US).

2. The spill volumes at Marshall were within the range of the amount of spill possible (and, in fact, substantially less than the maximum spill) if a crude by rail unit train released much of its cargo. 840,000 gallons (or 3.3 million liters) were spilled at Marshall, the equivalent of the full cargo release of 27 tank cars (carrying 31,000 gallons) or 34 tank cars (carrying 25,000 gallons).[36] With

[34] Enbridge First Quarter Interim Report to Shareholders for the Three Months Ended March 31, 2013, Section 11 Contingencies, Adobe p. 67. Accessed August 3, 2013.
See http://www.enbridge.com/InvestorRelations/FinancialInformation/InvestorDocumentsandFilings.aspx and then click on FIRST QUARTER REPORT under 2013.
[35] The population of Marshall is approximately 7,000.
[36] Maximum capacity per tank car typically varies between 25,000 and 31,800 gallons of crude, based on factors including maximum weight limits, tank car design, and type of crude. Capacity will generally be lower for heavy crudes (such as the dilbit spilled at Marshall), which weigh more per gallon than light crudes (such as the Bakken crude spilled at Lac-Mégantic). Likewise, capacity will be lower for tank cars
(footnote continued on next page)

transport by unit trains on the rise, and unit trains carrying up to 100+ tank cars, it would be possible for a unit train to spill significantly higher volumes than the 840,000 gallons (or 3.3 million liters) released at Marshall. The 6.0 million liters released at Lac-Mégantic (almost twice the amount released at Marshall) provide support for this finding.

3. In light of recent findings regarding the Line 6B spill, the EPA has recently expressed concerns regarding the additional impacts of tar sands crude spills (versus conventional oil), with a particular concern about spills on waterways.[37]

Regarding the need for improved safety regulation for CBR, there are a number of regulatory lessons from the Marshall, MI rupture that should be considered:

1. The NTSB investigation also clearly indicates that in the case of Enbridge, and with respect to the regulation of pipeline operators, "trust us" isn't good enough. Chair Hersman has insightfully pointed out that "for the regulator to delegate too much authority to the regulated to assess their own system risks and correct them is tantamount to the fox guarding the hen house."[38] Chair Hersman's words are even more relevant for the regulation of transport of hazardous materials by rail, which is in many ways both weaker and more fragmented than the regulation of liquid pipelines.[39]

2. The NTSB investigation pointed out that the Marshall rupture was "a wake-up call" to industry, the regulator, and the public." Enbridge knew for years that the

---

(footnote continued from previous page)
which have higher tare (unloaded) weights (such as those with heater coils and insulation, which are also sometimes used to transport dilbit).

[37] Comments of EPA on the Department of State's Keystone XL Draft Supplement Environmental Impact Statement (DSEIS). Accessed October 30, 2013.
http://epa.gov/compliance/nepa/keystone-xl-project-epa-comment-letter-20130056.pdf

[38] See footnote 33.

[39] As described in various other documents in the current proceeding, there is a long history of problems in regard to transport of hazardous materials (notably flammable liquids) by rail, with only a very slow and partial response to tighten standards to insure public safety. See Village of Barrington, Illinois and The Regional Answer to Canadian National (TRAC) - Petition for Rulemaking (P-1587); National Transportation Safety Board - Accident Report - Derailment of CN Freight Train U70691-18 With Subsequent Hazardous Materials Release and Fire Cherry Valley, Illinois June 19, 2009; and National Transportation Safety Board - Safety Recommendation - R-12-5 through -8, R-07-4 (Reiteration)

In the case of liquid pipelines, the pipeline owner/operator is typically responsible for construction and operation of all facilities within its transport system that are handling hazardous materials (notably flammable liquids), including pipes, valves, and pumping stations. By contrast, in the case of rail, the railroads provide motive power and crews to move hazardous materials (notably flammable liquids) in tank cars which are typically owned, loaded, and unloaded by shippers and other entities besides the railroads.

pipeline was vulnerable; much as the rail industry knows that another CBR spill is only a matter of time.

Although the Line 6B rupture caused widespread devastation to the Kalamazoo and surrounding wetlands and, at $1 billion in clean-up costs, holds the record for the single most expensive onshore spill in US history,[40] it is nowhere near the worst-case scenario for a CBR disaster. Similar to the Lac-Mégantic tragedy involving a CBR release of Bakken, the costs/damages for a CBR dilbit spill could be substantially higher in a more populated area, and costs could easily escalate to the multi-billion dollar range. The clean-up of dilbit, especially in waterways is particularly problematic and expensive. Moreover, the condensate can be highly flammable when spilled and this flammability could have catastrophic consequences in a more densely populated area.

[40] See footnote 33.

4. Conclusion

As the examples of the Lac-Mégantic CBR tragedy and the Marshall, MI pipeline rupture have demonstrated, a major CBR unit train accidents/spill could cost $1 billion or more for a single event.

Unit trains now transport unconventional crude, including both dilbit and Bakken, through densely populated urban areas, and this form of transport is rapidly growing. An accident/spill in an urban area could damage and disrupt major infrastructure, result in serious and widespread water and soil contamination, and possibly cause loss of life. The costs of a major unit train derailment in an urban centre could easily escalate into the multi-billion dollar range.

Are you comfortable in your retirement?

If you have a $500,000 portfolio, download the guide for retirees by *Forbes* columnist and money manager Ken Fisher's firm. It's called **"The 15-Minute Retirement Plan."** Even if you have something else in place right now, it *still* makes sense to request your guide! Click Here to Download Your Guide!

FISHER INVESTMENTS®

Dow Jones Reprints: This copy is for your personal, non-commercial use only. To order presentation-ready copies for distribution to your colleagues, clients or customers, use the Order Reprints tool at the bottom of any article or visit www.djreprints.com

- See a sample reprint in PDF format.
- Order a reprint of this article now

CANADA NEWS

Officials Tighten Crude-Shipping Standards

By BETSY MORRIS and RUSSELL GOLD

Updated Aug. 7, 2013 10:09 p.m. ET

The Federal Railroad Administration plans to start asking shipping companies to supply testing data they use to classify their crude-oil shipments, saying it is concerned that some shipments are being transported in tank cars that aren't safe enough.

In a letter to American Petroleum Institute CEO Jack Gerard last week, the FRA said it is investigating whether some crude shipments contain chemicals—possibly from the hydraulic-fracturing process used to extract it—that make them more hazardous than their classification indicates.

Oil containers sit at a train depot outside Williston, N.D., last month. Oil producers and refiners are increasingly using rail in North Dakota and Texas, where there aren't enough pipelines. *Getty Images*

The agency told the API it also suspects that mixes of crude and other chemicals might be the cause of an increase in damage to tank cars caused by "severe corrosion." If shippers can't supply their testing data, the FRA said in the letter, it will work with the Pipeline and Hazardous Materials Safety Administration to test the shipments independently.

Companies routinely add highly corrosive hydrochloric acid to fracking fluid to break down rock formations. They also add certain chemicals to kill microorganisms and reduce friction in oil. Frack fluids are exempt from federal disclosure laws, but some companies voluntarily provide details, and some states require a thorough ingredient list.

The action is the latest by the agency to toughen regulation of the transport by rail of crude oil after a runaway train hauling 72 tank cars with crude oil derailed and exploded last month, killing 47 people and ravaging the Quebec town of Lac-Mégantic.

The latest FRA action "looks like a shot over the bow," said Grady Cothen, a former FRA safety official who is now a transportation-policy consultant. "They seem to be saying, 'Get your house in order or we'll do it for you.' "

The Quebec disaster follows a number of serious accidents involving hazardous materials and tank cars in recent years that have raised federal regulators' concern. More than 34 million barrels of crude were delivered to U.S. refineries by train in 2012, a fivefold increase compared with a year earlier, according to the Energy Information Administration, the statistical arm of the U.S. Energy Department. The volume is

expected to increase again in 2013.

The Canadian Transportation Safety Board said it would analyze and compare numerous fluid samples taken from the Lac-Mégantic accident "to verify the properties of the petroleum product in these tank cars" and to help figure out "why the oil created such a fierce fire that night." It is also analyzing metallurgical samples, damage records and photographs to determine how well the tank cars involved in the derailment were prepared to withstand a crash.

The company that operated that train, Montreal, Maine & Atlantic Railway Ltd., filed for bankruptcy protection Wednesday in U.S. Bankruptcy Court in Bangor, Maine. Its Canadian counterpart filed for protection from creditors.

The FRA moves will likely pose difficulties for some shippers. Oil producers and refiners are increasingly using rail in Texas and North Dakota, where there aren't enough pipelines to get the crude to markets that will command the highest price.

Prentiss Searles, marketing-issues manager for the American Petroleum Institute, said the institute was reviewing the letter to see what, if anything, needed to be done to respond to the FRA's concerns. "Ultimately, we're going to follow the rules and requirements that currently exist. If somebody made a mistake and put the wrong type of crude in the wrong type of tank care, that should not happen," he said.

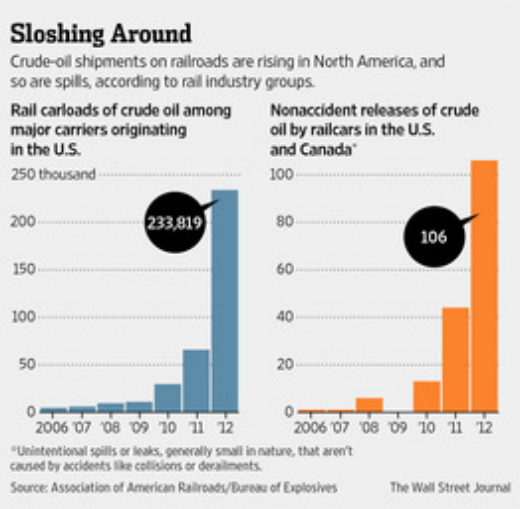

EOG Resources Inc., a Houston-based energy producer that ships crude from rail yards in Texas and North Dakota, said it was "in close communication with our railroad carriers and is currently reviewing the topics raised by the Federal Railroad Administration." Jeff Hume of Continental Resources Inc., an Oklahoma City-based crude producer, said: "We meet all [Department of Transportation] specifications. If the DOT deems it necessary to change those specifications, we will support what safety experts recommend."

In the detailed letter to the Petroleum Institute, Thomas J. Herrmann, acting director of FRA's office of safety assurance and compliance, spelled out numerous reasons for the agency's concern. In one example, the FRA said a company was shipping crude that should have been classified as flammable in a tank car that hadn't been designed for that material. The agency could "only speculate as to the number of potential crude-oil shipments that are being made in violation of Hazardous Material Regulations," he wrote.

Shippers need to know the chemical makeup of substances they are shipping, the letter said. But FRA said its audits indicate the oil is often classified based on outdated testing and testing that doesn't reflect all the batches of oil from different sources and wells that are being mixed. Crude is frequently shipped in unit trains made up of scores of tank cars, containing oil from different shippers and many wells, some of which has been blended together.

The FRA also noted recurring problems with what it said appeared to be overloaded tank cars. Proper tank-car loading is based on a calculation that involves relative temperatures and gravity to determine the quantity to load without overloading that will result in leaks.

George King, an engineer and technology consultant for Apache Corp., said hydrochloric acid used in fracking typically doesn't return to the surface. "I have never seen anything stronger than a very, very weak vinegar come back in terms of acid," he said.

However, Mr. King said the acid won't mix with crude oil and if stored in a tanker, will settle to the bottom. "Could it be corrosive on steel? Yes," he said.

—Daniel Gilbert contributed to this article.

Write to Betsy Morris at betsy.morris@wsj.com

Copyright 2013 Dow Jones & Company, Inc. All Rights Reserved
This copy is for your personal, non-commercial use only. Distribution and use of this material are governed by our Subscriber Agreement and by copyright law. For non-personal use or to order multiple copies, please contact Dow Jones Reprints at 1-800-843-0008 or visit www.djreprints.com

EXHIBIT 3

Comments

on

Environmental Impact Report

for the

Phillips 66 Propane Recovery Project

Rodeo, California

Prepared
for
Shute, Mihaly & Weinberger LLP on behalf of
Rodeo Citizens Association

November 15, 2013

Prepared by
Phyllis Fox, Ph.D., PE
Consulting Engineer
745 White Pine Ave.
Rockledge, FL 32955

I. INTRODUCTION

The Phillips 66 San Francisco Refinery, located at Rodeo (Refinery), is proposing to recover an additional 4,200 barrels per day (BPD) of propane and 3,800 BPD of butane from the refinery fuel gas (RFG) (collectively known as "liquefied natural gas" or LNG) to export for sale (Project). I was asked by Shute, Mihaly & Weinberger to review the Draft Environmental Impact Report (DEIR)[1] for this Project, related files of the Bay Area Air Quality Management District (BAAQMD), and select responses to comments in the Final Environmental Impact Report (FEIR).[2] Based on this review, I was asked to evaluate the accuracy of the DEIR/FEIR Project Description and their analysis of the Project's air quality impacts.

My evaluation, presented below, indicates the Project would result in significant unmitigated air quality and public health impacts. The DEIR and FEIR significantly underestimate the amount of criteria pollutants and greenhouse gas emissions that would be emitted by the Project. Emissions of nitrogen oxides (NOx) and reactive organic gases (ROG) will exceed both daily and annual CEQA significance thresholds. These emissions plus certain hazardous air pollutants (HAPs) emissions that were not disclosed in the DEIR will cause significant unmitigated air quality and public health impacts.

The DEIR's Project description is incomplete. First, it fails to disclose the baseline crude slate, which determines the CEQA baseline emissions from all processing units within the Refinery. Second, it fails to disclose other directly related projects at the Phillips 66 Santa Maria Facility, which is linked by pipeline to the Rodeo Refinery. These directly related projects result in significant cumulative impacts that were not evaluated. Third, it fails to disclose related changes at the Rodeo Refinery itself, including a significant drop in refinery fuel gas heat content, which requires physical modifications to 19 process heaters. Finally, the Project description omits all of the key chemical composition data required to assess impacts and vet the DEIR's no significant impact conclusions.

My resume is included in Attachment 1 to these comments. I have over 40 years of experience in the field of environmental engineering, including air emissions and air pollution control; greenhouse gas emission inventory and control; air quality management; water quality and water supply investigations; hazardous waste investigations; environmental permitting; nuisance investigations (odor, noise); environmental impact reports, including CEQA/NEPA documentation; risk assessments; and litigation support.

I have M.S. and Ph.D. degrees in environmental engineering from the University of California at Berkeley with minors in Hydrology and Mathematics. I am a licensed professional engineer (chemical, environmental) in five states, including California; a

---

[1] Contra Costa County Department of Conservation and Development, Phillips 66 Propane Recovery Project, Draft Environmental Impact Report, June 2013 (DEIR).

[2] Contra Costa County Department of Conservation and Development, Phillips 66 Propane Recovery Project, Final Environmental Impact Report, November 2013 (FEIR).

Board Certified Environmental Engineer, certified in Air Pollution Control by the American Academy of Environmental Engineers; and a Qualified Environmental Professional, certified by the Institute of Professional Environmental Practice.

I have prepared comments, responses to comments and sections of EIRs for both proponents and opponents of projects on air quality, water supply, water quality, hazardous waste, public health, risk assessment, worker health and safety, odor, risk of upset, noise, land use and other areas for well over 100 CEQA documents. This work includes EIRs, Negative Declarations (NDs), and Mitigated Negative Declarations (MNDs) for all California refineries as well as various other permitting actions for tar sands refinery upgrades in Indiana, Louisiana, Michigan, Ohio, South Dakota, Utah, and Texas and LNG facilities in Texas, Louisiana, and New York. I was a consultant to a former owner of the subject Refinery on CEQA and other environmental issues for over a decade and am thus very familiar with both the Rodeo Refinery and the Santa Maria Facility.

My work has been cited in two published CEQA opinions: (1) *Berkeley Keep Jets Over the Bay Committee v. Board of Port Commissioners* (2001) 91 Cal.App.4th 1344 and *Communities for a Better Environment v. South Coast Air Quality Management Dist.* (2010) 48 Cal.4th 310.

II. THE PROJECT IS PIECEMEALED

The DEIR only evaluated a portion of the Project. The Project as described in the DEIR narrowly involves modifications to the Rodeo Refinery "to recover for sale propane and additional butane from refinery fuel gas and other process streams." DEIR, pp. 3-2, 3-5. However, the DEIR fails to disclose changes elsewhere that are required to produce all of the propane and butane that would be recovered.

The components of the Project evaluated in the DEIR include an LPG Recovery Unit, Fuel Gas Hydrotreating, Propane Storage, Railcar Loading Modification, and certain ancillary facilities. DEIR, Table 3-1 & Sec. 3.4. I reviewed the BAAQMD file for this Project and other currently pending and related projects. Based on this review, in my opinion, sufficient propane and butane could not be recovered from the current crude slate to support the Project's propane/butane production goals. Changes in the amount and type of feedstock would be required to achieve the propane and butane recovery goals.

The Refinery currently recovers up to 9,000 BPD of butane in the summer for sale.[3] DEIR, p. 3-17. The Project would increase butane recovery by 3,800 BPD and also recover 4,200 BPD of propane. The total butane and propane recovery after the Project has been implemented would be limited by permit conditions to a maximum daily of 14,500 BPD and 5,292,550 barrels per 12 consecutive months. 6/28/13 Response

[3] Butane sold as LPG has the disadvantage of a fairly high boiling point and thus is not desirable as a fuel during the winter when stored outdoors in areas that have temperatures below freezing.

Letter,[4] p. 5, Response to Comment #5. It is unclear whether this is 14,500 BPD in addition to the existing 9,000 BPD or a total of 14,500 BPD, including current baseline butane recovery.[5] The DEIR, for example, clearly states that the Project would recover 3,800 BPD of "additional butane." DEIR, p. 3-23. This should have been clarified in the FEIR, but was not. Regardless, this is a large amount butane and propane for a refinery that processes very heavy crudes configured as shown in DEIR Figure 3-4 . Thus, other modifications, not disclosed in the DEIR, are required to fully implement this Project.

The average feedstock to the Refinery over the period 2007 to 2011 was 116,800 BPD and ranged from 110,000 BPD to 128,000 BPD, or nearly up to its reported capacity of 130,000 BPD. DEIR Project Description,[6] Table 1. Thus, the proposed butane plus propane recovery Project would convert about 12% of the baseline feedstock to butane and propane, assuming a total of 14,500 BPD. If one assumes the Project would recover 14,500 BPD additional, plus the existing 9,000 BPD, 20% of the feedstock would be converted. Further, about 16% of the product output of the Refinery, estimated as 89,400 BPD over the period 2007 to 2011 (DEIR Project Description, Table 4), would be propane and butane.

These high percentages are not consistent with my experience, particularly for the mainly heavy crudes and semi-refined products from heavy crudes processed at this Refinery, which have much lower amounts of these low-boiling products.[7] The DEIR and other documents I consulted contain no information that would allow me to directly estimate the amount of propane and butane that could be recovered from baseline feedstock such as:

- composition of the Refinery fuel gas and other gas stream from which propane and butane would be recovered, e.g., gas chromatographic analyses;
- distillation curves and composition data for the crude, semi-refined feedstock inputs from elsewhere, and other internal streams that would routed to the subject Project;
- relative amount of crude and semi-refined feedstock;
- material balance or outputs of refinery models.

These high values for propane/butane recovery suggest that the feedstock input will be modified in conjunction with the Project. Yet the DEIR lacks the data or

---

[4] Letter from Don Bristol, Phillips, to Brian Lusher, BAAQMD, Re: Response to Incomplete Letter 5/21/13 Application #25199, June 28, 2013 (6/28/13 Response Letter). (References are identified in footnotes and provided on the attached DVD.)

[5] The 4/30/13 Response Letter, p. 4, Response to Comment #6 states "The throughput [14,500 BPD] includes butane that is currently being recovered as well as the butane and propane that will be recovered as part of this project."

[6] Phillips 66, Rodeo Propane Recovery Project Description, August 2012.

[7] Oil Transportation Information at http://www.oil-transport.info/crudedata/crudeoildata/crudeoildata.html

calculations that support the foundational assumption that 100% of the propane/butane can be recovered from the baseline refinery fuel gas.

The FEIR asserts that "the actual amount of propane and butane currently available for recovery (determined using measured flow data and lab analysis of propane and butane content) is approximately 4,200 bpd of propane and 9,300 bpd of butane." FEIR, p. 3.2-130. However, none of this data is in the record. We do not know, for example, if the amount "currently available" is the amount being processed in the CEQA baseline, or the amount that will be available for processing in the future, after the Project is implemented, based on other changes at other related Phillips 66 facilities, such as at Phillips 66's Santa Maria Facility or Ferndale Refinery.

A crude throughput expansion project, for example, was recently approved at the Phillips 66 Santa Maria Facility, which is linked by pipeline to the Rodeo Refinery. This project is further discussed below. In summary, the DEIR for the Santa Maria Facility (referred to as SMF DEIR/FEIR in these Comments) clearly states that partially refined products from this increase in crude will be sent to the Rodeo Refinery for further processing. As explained below, these partially refined products are feedstocks to the Propane/Butane Recovery Project. The Santa Maria crude throughput increase project is not operational yet. Thus, there is solid evidence that there will be increases in the input to the Propane/Butane Project from related projects elsewhere in the Phillips 66 system that are not part of the instant CEQA baseline. Thus, the amount "currently available" likely includes future increases in production that have not been disclosed in the Propane/Butane Project DEIR or FEIR. Thus, cumulative impacts of these two projects should have been evaluated and the increase in emissions from processing the increase in semi-refined products from Santa Maria at Rodeo should have been included in the emission calculations.

As the cited flow data and lab analysis are asserted to establish the Project baseline and is part of the Project description (i.e., it determined the design basis of the Project), it must be provided for public review. This is particularly critical here as the claimed recovery of propane and butane from the baseline feedstock is very high for the type and amount of crude that the FEIR asserts is currently refined and the existing Refinery configuration. As noted above, other projects currently proposed by Phillips 66 could increase the recoverable propane and butane, making up the deficit.

The San Francisco Refinery (SFR) consists of two facilities linked by a 200-mile pipeline. The Santa Maria Facility (SMF) is located in Arroyo Grande, in San Luis Obispo County, while the Rodeo Refinery (referred to as "the Refinery" in these Comments) is located in Rodeo in the San Francisco Bay Area. The SMF mainly processes heavy, high sulfur crude oil and sends semi-refined liquid products, e.g., gas oil, to the Rodeo Refinery. SMF DEIR,[8] pp. ES-2, 1-1 and Table 2-3. The Refinery DEIR does not disclose the existence of this related facility but it is acknowledged in the FEIR. FEIR, Master Response 2.2.

---

[8] Marine Research Specialists, Phillips 66 Santa Maria Refinery Throughput Increase Project, Final Environmental Impact Report, October 2012 (SMF FEIR), Available at: http://slocleanair.org/phillips66feir.

The subject DEIR addresses changes at just the Rodeo Refinery to increase butane and propane production, once the proper amount of the right feedstocks arrive. As discussed above, the DEIR is silent on the composition and relative amounts of feedstock (heavy crude, semi-refined products received from SMF) and the FEIR adds no additional information. Additional feedstock containing recoverable propane and butane is required.

Additional feedstock could be produced by proposed modifications at the Santa Maria Facility to increase its production of semi-refined feedstock (gas oil and naphtha), to send to the Rodeo Refinery. Phillips 66 proposed to increase the production of semi-refined products at the Santa Maria Refinery specifically to send to the Rodeo Refinery. SMF DEIR, p. ES-4. This throughput increase would necessarily be included in the streams from which propane and butane would be recovered, as explained below. Another related Phillips 66 project (rail spur extension required to import increased amounts of crude to support the throughput expansion) at the Santa Maria Facility is currently undergoing CEQA review. The SMF Rail Spur DEIR is expected to be released soon. My commentary here is based on the Rail Spur Land Use Application. SMF Rail Spur Land Use Ap.[9] These two projects provide the missing links in the butane/propane supply chain at the Rodeo Refinery.

The Santa Maria throughput increase project would increase ". . .the volume of products leaving the SMF for the Rodeo Refinery via pipeline." SMF DEIR, pp. ES-4, 2-25. The products are not specifically identified in this statement, but are noted elsewhere as gas oil and naphtha. SMF FEIR, pp. 2-11, 2-17. These semi-refined products would contain a significant amount of butane and propane[10] and would be further processed at the Rodeo Refinery to generate additional butane and propane, as explained further below. DEIR, Figs. 3-4 and 3-6.

The SMF DEIR for the throughput increase project included a clarifying statement as to the products that would be sent to Rodeo, which was deleted in the FEIR: "an increased volume of products leaving the SMF for the Rodeo Refinery via pipeline (including semi-refined crude oil or a combination of semi-refined crude oil and previously refined gas/oil petroleum)." SMF DEIR,[11] p. 2-25. This omission is material as it indicates that more than semi-refined products from the SMR would be sent to the Rodeo Refinery. This omission suggests crudes could also be sent to the Rodeo Refinery. This clue, coupled with the rail spur extension project suggests that tar sands crudes, some of which are semi-refined, could additionally be sent to the Rodeo Refinery via rail import at Santa Maria. This issue is discussed below.

The SMF FEIR indicates the throughput of the Santa Maria Facility would increase from the permit level of 44,500 BPD (SMF FEIR, p. ES-4) by 10% to a

---

[9] Phillips 66 Company, Land Use Application, Santa Maria Refinery Rail Project, June 2013.

[10] See, e.g., MSDS for naphtha, available at: http://www.collectioncare.org/MSDS/naphthamsds.pdf .

[11] Marine Research Specialists, ConocoPhillips Santa Maria Refinery Throughput Increase Project, Public Draft Environmental Impact Report, August 2011.

maximum of 48,950 BPD or by 4,450 BPD. SMF FEIR, p. 1-1. However, the permit level is not the baseline for CEQA. The actual throughput for the last three years of available data is 40,275 BPD. Thus, the SMF throughput increase project would increase the throughput of the SMF by 8,675 BPD. This increase would be converted into semi-refined products in the SMF's distillation units and coker to yield gas oil and naptha, which would be sent to the Rodeo Refinery, where propane and butane would be separated, contributing to the propane/butane slated for recovery by the Rodeo Project.

This link is clearly shown in the Rodeo Refinery block flow diagrams in the subject Rodeo Refinery DEIR. The block flow diagram for the existing Rodeo Refinery, DEIR Figure 3-4, shows "SMGO" entering the Refinery at the U-240 Prefractionator unit (Prefrac unit). DEIR, p. 3-12 ("Heavy gas oil (HGO) streams from Unit 200 and HGO purchased from outside of the Refinery are fractionated in the Unit 240 prefractionator."). SMGO is Santa Maria Gas Oil. This DEIR figure is reproduced here as Figure 1 for ease of reference. The U-240 Prefrac unit separates Santa Maria gas oil and other gas oils into lighter hydrocarbon fractions that are currently blended into the Refinery Fuel Gas, shown in Figure 3-5 (see lower left hand corner, blue arrow labeled U-240/244/248 S-RFG being routed to U-240 Fuel Gas Treating), but which will be further processed into propane and butane in new units added to the Rodeo Refinery as part of the Project.

Figure 1
Overall Existing Refinery Block Flow Diagram

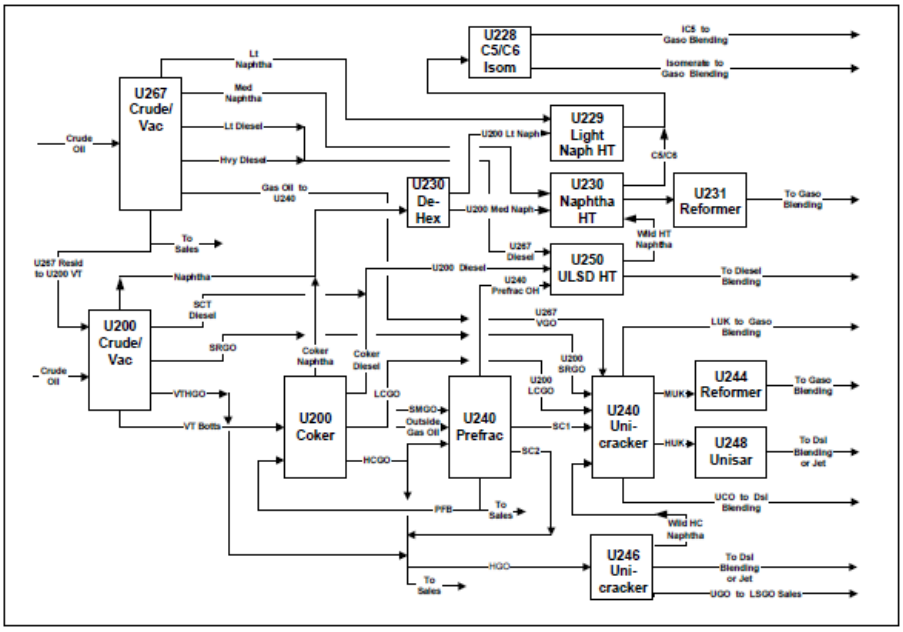

SOURCE: Phillips 66 Company

Phillips 66 Propane Recovery Project . 120546
Figure 3-4
Overall Block Flow Diagram of Refinery

Under the Project, the output from the Prefrac unit is sent to the proposed "RFG Propane Recovery Unit" instead of the Refinery Fuel Gas system. This unit is the heart of the subject Project and is immediately adjacent to the Unit 240 Prefrac unit. DEIR, Table

3-2. Propane and butane are recovered in this unit. This new propane/butane extraction unit is shown in DEIR Figure 3-6, which is reproduced here as Figure 2 for ease of reference.

Figure 2
Proposed Refinery Fuel Gas System Block Flow Diagram

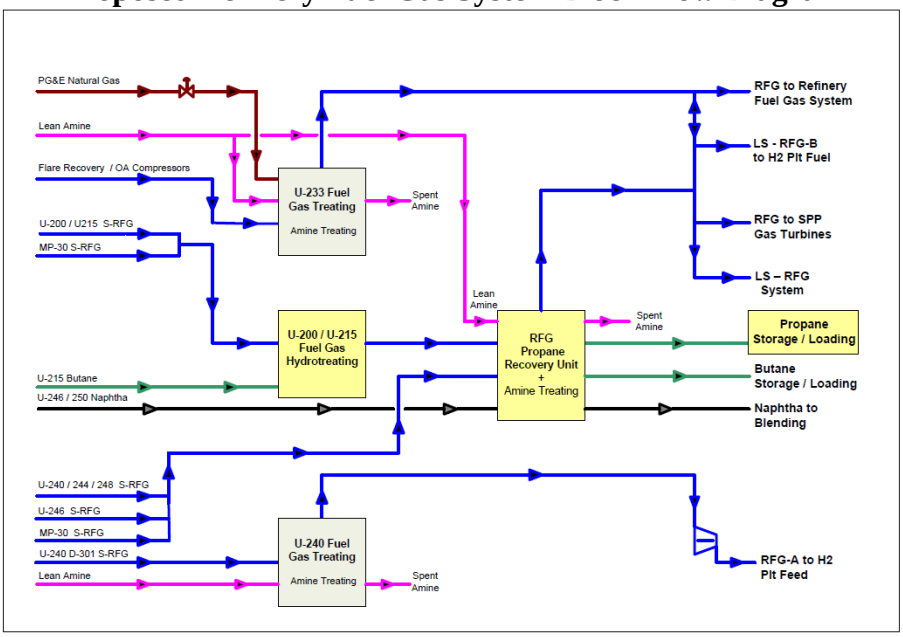

SOURCE: Phillips 66 Company

Phillips 66 Propane Recovery Project . 120546
Figure 3-6
Proposed Refinery Fuel Gas System Block Flow Diagram

The RFG Propane Recovery Unit is the big yellow box in the middle of Figure 2. Blue arrows in the lower left hand corner of Figure 2 identify the inputs to this unit, which are various refinery streams. These streams include "U-240/244/248 S-RFG." This designation means that Refinery Fuel Gas (RFG) from Unit U-240 is sent to the RFG Propane Recovery Unit. (This stream was formerly sent to the U-240 Fuel Gas Treating Unit. DEIR, Fig. 3-5.) As Santa Maria Gas Oil (SMGO) is one of the inputs to Unit U-240, changes at the Santa Maria Facility would be transmitted directly to the Project via the U-240 Prefrac Unit.

This establishes a direct link between this Project and modifications at the Santa Maria Facility. This is the "nexus" to the larger project with the potential to change crude oil feedstocks.

The increase in throughput at the Santa Maria Facility would increase the amount of SMGO processed at Rodeo into propane and butane. The new rail spur at the Santa Maria Facility would enable tar sands crudes to be imported to and processed at Santa Maria and/or shipped directly to Rodeo. As discussed below, tar sands crudes imported by rail are blended with a diluent that is rich in butane and propane. Thus, both projects proposed for the Santa Maria Facility will have a direct impact on the amount of propane and butane available for recovery at Rodeo, making up any deficit based on the Rodeo baseline crude slate. The baseline crude slate and feedstocks to the propane/butane

recovery Project are not disclosed so this link and its impact on emissions would never be discovered and thus not mitigated.

Thus, there is both a direct pipeline link between the two facilities, an explicit statement that the SMF throughput project was developed to send more semi-refined product to the Rodeo Refinery, and a direct process link between those products and the input to the propane/butane recovery Project disclosed on the process flow diagrams for the Project. These three factors establish a nexus between the propane/butane Project and modifications at the Santa Maria Facility. Thus, these two projects are integrally related and should have been evaluated as a single project.

Additional propane/butane-rich feedstock could be obtained by importing certain classes of cost-advantaged tar sands crudes. These tar sands and other cost-advantaged crudes are cost advantaged because they are stranded, with no pipeline access and thus must be delivered by rail.[12] However, refineries are not equipped to take delivery of large amounts of crude by rail, which requires large unit trains that require significant infrastructure improvements.

Tar sands crudes are heavier and more viscous than the feedstock currently processed at either Rodeo or Santa Maria. These crudes are thus commonly blended with 25% to 30% diluent to facilitate transporting them by rail or pipeline. The blended crude is known as a "DilBit." The diluent is typically natural gas condensate, pentanes, or naphtha.[13] The diluent can be readily separated and recovered as propane/butane at Rodeo.

Cost-advantaged crude sells at a discount relative to crude oils tied to the global benchmark, North Sea Brent crude. Many of these cost-advantaged crudes are rich in fractions that would increase the yield of butane and propane[14] at the Rodeo Refinery. Based on analyses by one of Phillips' competitors, Western Canadian Select (WCS) was identified as one of the most cost-advantaged crude for direct rail import to California.[15]

---

[12] Small amounts of Canadian tar sands crudes are currently arriving on the west coast by ship. However, the pipeline capacity to transport the tar sands crude to the west coast and the rail capacity to transport it to the west coast for subsequent water delivery is currently very limited. However, projects are underway to alleviate these bottlenecks, including a Phillips 66 project at its Ferndale facility in Washington. The Ferndale project would allow direct import of tar sands crude at the Rodeo Marine Terminal.

[13] Gary R. Brierley, Visnja A. Gembicki, and Tim M. Cowan, Changing Refinery Configurations for Heavy and Synthetic Crude Processing, Available at: https://www.edockets.state.mn.us/EFiling/edockets/searchDocuments.do?method=showPoup&documentId=%7BA07DE342-E9B1-402A-83F7-36B18DC3DD05%7D&documentTitle=5639138.

[14] See, for example, Pat Swafford, Evaluating Canadian Crudes in US Gulf Coast Refineries, Crude Oil Quality Association Meeting, February 11, 2010, Available at: http://www.coqa-inc.org/20100211_Swafford_Crude_Evaluations.pdf.

[15] Valero, UBS Global Oil and Gas Conference, May 21-22, 2013, p. 10, Available at: http://www.valero.com/InvestorRelations/Pages/EventsPresentations.aspx. provided as Appendix D to TGG Comments.

Western Canadian Select is a tar sands DilBit that contains 2% butane and 4.3% pentane.[16]

Cost-advantaged crudes could reach Rodeo by rail starting at the Phillips 66 Ferndale Marine Terminal and then barged down the Pacific coast to the Phillips 66 Rodeo Marine Terminal; by rail to Santa Maria and then by pipeline to Rodeo; or by rail or barge to the nearby Pittsburg terminal.[17] However, the Phillips 66 refineries are not equipped to accept large volumes of crude by rail. Thus, Phillips 66 is currently permitting projects to achieve both of these goals.[18]

An expansion of the Phillips 66 Marine Terminal at Rodeo was recently permitted to allow an increase of crude oil imported by ship by 20,500 BBP, from 30,682 BPD at present to 51,182 BPD.[19] Phillips 66 was recently issued a permit to construct a new crude rail unloading facility at its Ferndale Refinery in Washington to increase rail shipments of cheap Canadian tar sands crudes. This rail terminal would allow it to import tar sands crude by rail and barge them down the Pacific coast to Rodeo.[20] [21]

The Phillips 66 rail spur extension project at the Santa Maria Facility would allow the import of a "full range of competitively priced crude oil." Rail Spur Land Use Ap., Appx. A, pdf 18. Phillips has admitted that these "competitively priced crude oils" include Canadian tar sands crudes. These crudes would be processed at the Santa Maria Facility, which sends its semi-refined products to Rodeo. The SMF is permitted to process up to 49,950 BPD of crude. SMF FEIR, p. 1-1. The rail spur project would allow the import of 37,000 BPD of "competitively priced crude oils", or 74% of its

---

[16] Crude Monitor, Western Canadian Select, Available at: http://www.crudemonitor.ca/crude.php?acr=WCS.

[17] Phillips 66 Delivers on Advantaged Crude Strategy, Available at: http://www.phillips66.com/EN/newsroom/feature-stories/Pages/AdvantagedCrude.aspx.

[18] Phillips 66 Delivers on Advantaged Crude Strategy, Available at: http://www.phillips66.com/EN/newsroom/feature-stories/Pages/AdvantagedCrude.aspx.

[19] Bay Area Air Quality Management District, CEQA Initial Study, Marine Terminal Offload Limit Revision Project, Phillips 66 Refinery, Rodeo, California, BAAQMD Permit Applications 22904, December 2012.

[20] Northwest Clean Air Agency, Order of Approval to Construct (OAC) 1152, Crude Unloading Facility, Phillips 66 Ferndale Refinery, June 7, 2013. See also: Thomson Reuters: "Phillips 66 Seeks Permit for Facility to Receive Crude by Rail", April 3, 2013, Available at: http://www.4-traders.com/PHILLIPS-66-10447684/news/Phillips-66-seeks-permit-for-facility-to-receive-crude-by-rail-16604359/.

[21] In addition, crude oil will either be received by or delivered to a new facility located in Pittsburg, California. The proposed WesPac Energy–Pittsburg Terminal (Terminal) would be designed to receive crude oil and partially refined crude oil from trains, marine vessels, and pipelines, store oil in existing or new storage tanks, and then transfer oil to nearby refineries, including Rodeo. WesPac RDEIR, p. 2.0-1. All products handled at the facility would be transported by rail, ship, barge, or pipeline. Id. The Terminal would operate with an average throughput of 242,000 barrels (BBLs)1 of crude oil or partially refined crude oil per day, and would have a maximum capacity throughput of 375,000 BBLs per day. Id., p. 2.0-2. The total annual throughput for the entire Terminal would be approximately 88,300,000 BBLs of crude oil and/or partially refined crude oil per year. *Id.*

throughput. Rail Project IS,[22] pp. 15, 22. This means that one of the feedstocks for the propane/butane recovery Project would be significantly modified by the Santa Maria rail spur project to include tar sands crude, which would include propane/butane rich DilBits.

While the DEIR did not acknowledge the relationship between the subject Project and the rail spur extension project, the FEIR does mention the existence of the rail spur extension project at Santa Maria, but claims, with no support, that the crudes imported would be only from "domestic sources available in the marketplace." FEIR, p. 2-4. This contradicts the rail spur project description, which describes the project as allowing the import of a "full range of competitively priced crude oil," not just "domestic" sources. I am not aware of anything in the record for the Santa Maria rail spur extension project that would limit imported crude to just "domestic" sources. This contradicts not only the record in that case, but also public statements to the contrary by Phillips 66. Further, the FEIR does not evaluate the rail spur's environmental impacts at Rodeo, which are potentially significant, as discussed below and in Attachment 2 (my comments on Valero).

In a September 2013 presentation, Greg Garland, Chairman and CEO of Phillips 66, stated Phillips 66 plans to import "cost advantaged" crude from Canada to its refineries in California as illustrated in Figure 3. Garland stated: "Our real challenge that we have or opportunity that we have is to get advantaged crudes to the East Coast and West Coast. So we're working that in terms of moving Canadian crudes down into California or building rail facilities. We're looking at rail to barge to ship, down to the West Coast refineries...."[23]

In a May 2013 presentation, Phillips EVP Tim Taylor stated in response to a question on bringing heavy Canadian crude oil into California that "Today, we are doing some barge movements down the coast into California on heavy Canadian. You can look in the Northwest to do that. So that's an option that we're going to continue to use and we're looking at expanding that opportunity with some of the logistics things we're putting in place. We're also continuing to move crude by rail in smaller amounts into California and looking at projects really to increase that as well."[24]

---

[22] Arcadis, Applicant's Reference CEQA IS, Santa Maria Refinery Rail Project, June 2013 (Rail Project IS").

[23] September 12, 2013 Transcript, pdf 7: Available at: http://www.phillips66.com/EN/investor/presentations_ccalls/Documents/Barclays_091213_Final.pdf

[24] May 1, 2013 Transcript, pdf 13, Available at: http://www.phillips66.com/EN/investor/presentations_ccalls/Documents/PSX-Transcript-2013-05-01.pdf

Figure 3[25]

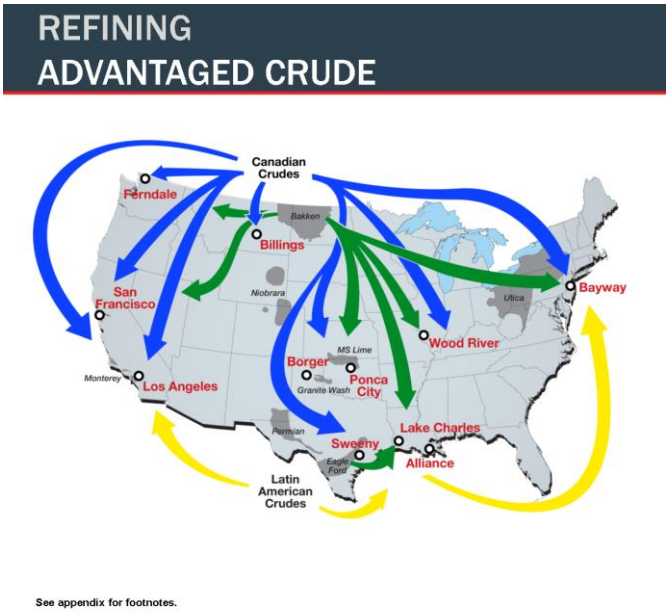

III. THE PROJECT DESCRIPTION IS INCOMPLETE

The information included in the DEIR is not adequate to identify and assess all of the impacts of the Project. There are two major classes of omissions.

First, the DEIR did not disclose that the Project would occur at a refinery that is linked by pipeline to a separate facility, the Santa Maria Facility, that will supply part of the feedstock proposed to be recovered as propane/butane. The FEIR acknowledges this link in response to comments. FEIR, Master Response 2.2, However, the FEIR continues to ignore the environmental impacts resulting from the link between modifications currently under way or proposed at the Santa Maria Facility and this Project. The link is established above in Comment II.

The failure to disclose this link, via Santa Maria gas oil which is converted into propane and butane at Rodeo by the Project, is a serious omission. The changes proposed and underway at the Santa Maria Facility will increase both the amount and composition of the feedstocks recovered as propane and butane at the Rodeo Refinery. These changes in feedstock amount and composition would result in significant air quality and public health impacts at Rodeo.

The FEIR asserts that "a company's purchase of raw materials is a business activity and not a CEQA project or action that would require a discretionary permit or approval by the County." FEIR, p. 3.2-118. This is incorrect. The chemical composition of the raw materials that are processed by a refinery directly affect the amount and

[25] Greg Garlands, Phillips 66, Barclays Conference, pdf 24, Available at: http://www.phillips66.com/EN/investor/presentations_ccalls/Documents/barclays2013_finalv2.pdf.

composition of emissions from that refinery. The amount and composition of sulfur in the crude slate, for example, ultimately determines the amount of SO2 that will be emitted from every fired source in the refinery and the amount of odiferous hydrogen sulfide and mercaptans that will be emitted from tanks, pumps, valves, and fittings. The composition of the crude slate establishes the CEQA baseline against which impacts must be measured.

In particular, the feedstocks that could arrive at the Rodeo Refinery for recovery as propane and butane may include tar sands crudes blended with diluents or "DilBits." These DilBits contain significant amounts of hazardous air pollutants, such as benzene, a potent carcinogen. These would be emitted at many fugitive components in the Refinery, including compressors, pumps, valves, fittings, and tanks, in greater amounts than from baseline feedstock.

These increased emissions would result in significant public health and air quality impacts not addressed in the DEIR nor the FEIR. These include significant increases in volatile organic compounds (VOCs) emissions not otherwise included in the emission estimates; hazardous air pollutants, including benzene, which could cause significant health impacts; and highly odiferous sulfur compounds that would individually and cumulatively cause malodors, degrade ambient air quality, increase the incidence of accidental releases, and adversely affect the health of workers and residents around the Refinery. Further, the high acid levels in these crudes and their semi-refined products would accelerate corrosion of refinery components, contributing to equipment failure and increased accidental releases.

Second, the DEIR failed to disclose that the Project would reduce the heat content of the refinery fuel gas from 1340 Btu/scf (British thermal unit per Standard Cubic Feet) (BAAQMD Permit Ap., p. 10) to 1050 MMBtu (one million Btu) (5/13/13 BAAQMD Notes). This is a 30% drop in the heat content of the fuel for all refinery fuel gas-fired sources within the Rodeo Refinery. Notes in the BAAQMD's files indicates that this will require replacing the burners in at least 19 process heaters. 5/13/13 BAAQMD Notes.

The DEIR did not disclose this dramatic decline in fuel gas heat content or the related changes in equipment that would be required to burn the altered refinery fuel gas. The FEIR concedes a decline in heat content in response to comments but fails to disclose the magnitude of the decline. However, the FEIR asserts with no analysis that "removal of propane and butane from the system and replacing it with natural gas would not affect the performance of combustion devices at the Refinery." FEIR, p. 3.2-130. The affected combustion units and burner configurations were not identified and baseline emissions were not disclosed. Thus, there is no basis for this claim.

The FEIR argues that the types of changes that would be made to heaters are considered by the BAAQMD to be an "alteration" rather than a "modification" as there would be no emission increase. FEIR, p. 3.2-130. However, the BAAQMD definition of "alteration" is irrelevant for purposes of CEQA. The EIR must identify the change in emissions from the affected combustion units and burner configurations.

A large drop in fuel heat content can affect the combustion efficiency of all combustion sources, including heaters, boilers, and turbines. A related concern is a concomitant drop in flame temperature. The Project basically involves replacing propane and butane that are currently part of the Refinery Fuel Gas (RFG) with natural gas. Propane and butane burn with a hotter flame than natural gas.[26] These two effects, a large drop in heat content and a lower flame temperature, would result in an increase in the emission of products of incomplete combustion, including hazardous air pollutants, carbon monoxide, and reactive organic gases from all fuel gas fired combustion sources. None of these pollutants are routinely monitored, e.g., with continuous emission monitoring systems, and some are not monitored at all (HAPs). Thus, the increases would not even be detected until after the fact. The DEIR and FEIR did not disclose the flame temperature issue. Further, only 19 process heaters would receive upgraded burners. The FEIR is silent on the impacts that would result from the lower heat content fuel and lower resulting flame temperature at other combustion sources that will not be upgraded.

The DEIR should be revised to include a complete description of the Project and an analysis of all of the environmental effects of these changes.

IV. PROJECT EMISSIONS ARE UNDERESTIMATED AND SIGNIFICANT

The DEIR underestimated the increase in greenhouse gas (GHG) emissions and criteria pollutant emissions (NOx, ROG, PM2.5/PM10) that would result from the Project. If the EIR had accurately estimated the Project's emissions, it would have determined that the Project will result in significant unmitigated air quality impacts from emissions of GHGs, NOx, and ROG. The DEIR also failed to estimate the increase in carbon monoxide emissions that would result from the Project.

IV.A. Greenhouse Gas Emissions (GHG) Are Underestimated

The DEIR estimated that the Project would decrease GHG emissions by 325,978 metric tons per year (MT/yr). DEIR, Table 4.8-3. The increases in GHG emissions from a new boiler (67,133 MT/yr), additional natural gas combustion (592,761 MT/yr), and other miscellaneous sources (7,372 MT/yr) are assumed to be offset by removing 14,500 BPD of butane and propane from the fuel gas system and replacing it with natural gas, which emits less GHG (-759,244 MT/yr) and the shutdown of Plant 4 Hydrogen Plant and B-401 Process Heater (-234,000 MT/yr). These reductions are not supported and are incorrect. When the errors discussed below are corrected, GHG emissions exceed the significance threshold of 10,000 MT/yr for stationary sources and 1,100 MT/yr for other types of projects (DEIR, p. 4.8-13). Thus, they are a significant unmitigated impact of the Project.

[26] Flame Temperatures of Some Common Gases, Available at; http://www.engineeringtoolbox.com/flame-temperatures-gases-d_422.html.

1. Reduction: Removing Butane and Propane from Fuel Gas

The Project would remove 14,500 BPD of butane and propane from the refinery fuel gas system and replace it with natural gas. As propane and butane generate more GHG emissions when burned than natural gas, this results in a net decrease in GHG emissions at the Refinery of 166,483 MT/yr (592,761 -759,244 = -166,483 MT/yr). DEIR, Table 4.8-3.

However, a reduction would only occur if the propane/butane are not used as fuel, which is their usual end use. The DEIR fails to disclose the use of the removed butane and propane. This undisclosed use could result in indirect impacts that were not considered in the DEIR. Butane and propane, for example, are fuels, often called liquefied petroleum gas or LPG. They are also feedstocks to various chemical processes. Either use would result in GHG emissions.

First, some, perhaps all, of the recovered butane and propane could be sold within California for use as fuel, where CEQA clearly applies to 100% of the resulting GHG emissions. If sold as fuel to customers in California, the resulting emissions are indirect emissions from the Project and must be included in the Project GHG emission inventory. Correspondence in the BAAQMD file indicates that ". . . some past (and current) butane deliveries have included local industrial customers within Contra Costa and Alameda counties." 4/30/13 Phillips Response Letter,[27] p. 10, Response to Comment #15. Thus, absent a condition of certification prohibiting the sale of propane and butane for any use in California that would generate GHG, 100% of the GHG emissions from burning propane and butane, the most likely end use, must be included in the EIR's GHG impact analysis. This one modification results in an increase in GHG emissions of 433,266 MT/yr from the Project.[28] This is a significant unmitigated impact of the Project.

Second, even assuming 100% of the propane and butane were burned or otherwise used outside of California in a manner that generated GHG, these emissions would still result in significant adverse impacts on California as GHG is a global pollutant, widely acknowledged to affect climate change worldwide, regardless of release point. The GHG emissions released in neighboring states, for example, would contribute to sea level rise along the California coast; loss in California's snow pack, leading to floods and droughts; and more high ozone days in California. DEIR, pp. 4.8-1/2.

Under this view, the Project is exporting its significant GHG impact to neighboring states, where it continues to impact global climate and thus California. Therefore, regardless of where the propane and butane are actually used, the environmental consequences of its use are the same and must be considered.

[27] Letter from Don Bristol, Phillips 66, to Brian Lusher, BAAQMD, Re: Response to Incomplete Letter 3/1/13, April 30, 2013 (4/30/13 Phillips Response Letter).

[28] Revised GHG emissions based on DEIR Table 4.8-3: -325,978 + 759,244 = **433,266 MT/yr**.

Thus, the DEIR implicitly assumes that the propane and butane removed from the refinery fuel gas will not be used in a manner that generates GHG and ignores the impacts of this use.

2. Relative Proportions of Propane and Butane

The GHG emissions were estimated assuming the production of 4,200 BPD of propane and 3,800 BPD of butane. Butane generates about 6% more GHG than propane per gallon burned. FEIR GHG Supplement, Nov. 2012, p. 4. In correspondence with the BAAQMD, Phillips has requested a lump-sum limit of 14,500 BPD (6/28/13 Phillips Response Letter, p. 5, Response to Comment #6), which would allow them to produce 100% butane, increasing GHG emissions compared to those estimated in the DEIR.

3. Reduction: Hydrogen Plant and Heater Shutdown

The GHG emission calculation additionally assumes a net reduction of 234,000 MT/yr from the shutdown of the Plant 4 Hydrogen Plant and the Unit 240 Process Heater B-401. DEIR, p. 4.3-13 and Table 4.8-3. The DEIR asserts that the GHG reduction corresponds to the 3-year average baseline GHG emissions from these units and cited ERM 2013. DEIR, p. 4.8-12. However, the DEIR references indicate that ERM 2013 is the BAAQMD Authority to Construct Application. DEIR, p. 9-8. I reviewed this document. It does not contain any support for the claimed reductions from shutting down these units. I was unable to find any support for these reductions in any of the documents that I reviewed and thus was unable to confirm whether they were correctly calculated. Regardless, the subject units were reportedly shutdown in 2011, which is part of the CEQA baseline. Thus, these reductions cannot be claimed as mitigation for Project increases.

My inability to find any support for these GHG emissions is consistent with comments filed by BAAQMD staff on the DEIR. They were also unable to find any support for the claimed GHG reductions from decommissioning a process heater and hydrogen plant. The BAAQMD further expressed concern that "emission from Unit 240 [the shutdown process heaters] may have shifted to other existing equipment due to increased operating demand." Increased heat demand, for example, would result from recovering butane and propane for the Project and upgrading additional semi-refined materials from the Santa Maria Facility. Further, the DEIR and the record supporting it do not contain any evidence that the emission reductions are permanent, real, and quantifiable.[29]

The FEIR responded to the BAAQMD's comments, asserting that the "GHG-related offsets that would be associated with the B-401 process heater are presented in the DEIR for informational purposes only and are not required to reduce the GHG emissions impact to a less-than-significant level." FEIR, p. 3.1-24. However, this is true only when considered in isolation, without acknowledging the increase in GHG emissions from burning the propane and butane removed from the refinery fuel gas. Further, this FEIR

[29] Letter from Jean Roggenkamp, BAAQMD, to Lashun Cross, CCC Dept. of Conservation and Development, Re: Phillips 66 Company Propane Recovery Project DEIR, August 6, 2013.

response also fails to provide any support for the GHG reductions from these shutdown unit.

If the GHG reductions from both the Plant 4 Hydrogen Plant and B-401 Process Heater Shutdown are removed from the GHG inventory in DEIR Table 4.8-3 and the increase in emissions from burning the propane and butane are added, the net increase in GHG emissions based on DEIR Table 4.8-3 would be 1.3 million MT/yr (-325,978+234,000 + 759,244 = 1,319,222 MT/yr). These emissions exceed the CEQA significance threshold by a vast amount and are highly significant.

IV.B. Criteria Pollutant Emissions Are Underestimated

The DEIR estimated daily and annual Project operational emissions for nitrogen oxides (NOx), sulfur dioxide (SO2), particulate matter (PM10 and PM2.5), and reactive organic gases (ROG). DEIR, Tables 4.3-6 and 4.3-7. The resulting emissions were compared to the BAAQMD's daily and annual CEQA significance thresholds for NOx, PM10, PM2.5, and ROG. No significance threshold was proposed for SO2 and carbon monoxide (CO) was omitted from DEIR's analyses completely.

The emissions that were estimated in the DEIR and remain unchanged in the FEIR are underestimated for two reasons, discussed below. When the errors in the emission calculations are corrected, the resulting increases in daily and annual NOx and ROG emissions exceed both the daily and annual CEQA significance thresholds. These are significant air quality impacts that were not identified or mitigated in the DEIR or FEIR.

1. Relies on Invalid NOx Emission Reductions

The DEIR's daily and annual NOx emission analysis relies on NOx emission reductions from shutting down Process Heater B-401. DEIR, Tables 4.3-6 and 4.3-7. These reductions occurred in 2011, during the CEQA baseline. Therefore, they are part of the baseline and not available to offset Project NOx increases. The increase in the DEIR's estimate of both daily (99.2 lb/day >54 lb/day) and annual NOx emissions (13.9 ton/yr > 10 ton/yr) exceed CEQA significance thresholds without these Process Heater B-401 reductions and are thus significant unmitigated impacts of the Project.

2. Excludes Locomotive Emissions Outside of the BAAQMD

Notwithstanding the use of invalid NOx offsets, the increase in NOx emissions are even higher than disclosed in the DEIR. The locomotives used to transport recovered propane and butane from the Refinery to market are the major source of NOx emissions (>70% of total Project emissions) and an important contributor to ROG emissions (8%). DEIR, Tables 4.3-6 and 4.3-7. These emissions were underestimated by only counting emissions released within the boundary of the BAAQMD, rather than the entire distance the locomotives will travel within California. DEIR, p. 4.3-20. CEQA covers at least all emissions released within the State and in some cases, emissions released outside of the State that impact in-State values.

The total rail track length within the BAAQMD used to calculate locomotive emissions in DEIR Tables 4.3-6 and 4.3-7 was 67 miles one way (AQS Attach. 1,[30] pdf 15) based on 50% of the trains using the Union Pacific route and 50% using the BNSF route. The total track length to the California-Arizona border used to calculate GHG emissions is 659 miles one way, based on the same 50/50 assumption. DEIR, p. 4.8-16 and AQS Attach. 1, pdf 15.

I revised the locomotive linehaul emissions for NOx and ROG using the total track length within California, but otherwise using all of the DEIR's assumptions. The results of my calculations are shown in Table 1. The criteria pollutant emissions from locomotive linehaul (which is only part of the total locomotive emissions) are significantly higher than disclosed in the DEIR, as shown in Table 1. This increase alone is sufficient to tip NOx emissions over the BAAQMD daily and annual significance thresholds, even assuming the invalid boiler NOx emission offsets.

Table 1
Revised Locomotive Linehaul Emissions

	DEIR[31] (lb/day)	Rev.[32] (lb/day)	Sig. Criteria (lb/day)	DEIR[31] (ton/yr)	Rev.[32] (ton/yr)	Sig. Criteria (ton/yr)
NOx	76.03	**580**	54	9.84	**72**	10
ROG	3.63	**27**	54	0.47	3.5	10

Note: **bold** indicates a revised locomotive linehaul emission rate that exceed the significance threshold all by itself, without considering increases from any other sources.

These revised emissions combined with all other claimed emission increases and decreases as reported in the DEIR, Tables 4.3-6 and 4.3-7, exceed the BAAQMD significance thresholds for both daily and annual NOx and ROG emissions, as explained below.

The net increase in daily NOx emissions, including the revised locomotive linehaul emissions of 580 lb/day and the invalid NOx offsets, is 541 lb/day.[33] These emissions exceed the NOx daily significance threshold of 54 lb/day by a factor of ten. DEIR, Table 4.3-6.

Similarly, the net increase in annual NOx emissions, including the revised locomotive linehaul emissions of 72 ton/yr and the invalid NOx offsets, is 66 ton/yr.[34]

---

[30] Phillips 66, Rodeo Propane Recovery Project, Air Quality Supplement, Attachment 1, Criteria Pollutant and GHG Emissions, November 2012 (AQS Attach. 1).

[31] AQS Attach. 1, pdf 1.

[32] From AQS Attach. 1, pdf 19 (lb/day) and pdf 20 (ton/yr): Linehaul emissions within California = small line haul from Richmond terminal to refinery + large linehaul from California border to Richmond terminal. For NOx in lbs/day: 18.97 + 57.06(659/67) = **580.2 lb/day** or **72.7 ton/yr**. For ROG: 0.97 +2.65(659/67) = **27.1 lb/day** or **3.47 ton/yr**.

[33] Total revised daily NOx emissions : 20.4 + (79.0-76.03) + 580 - 62.3 = **541.1 lb/day.**

[34] Total revised annual NOx emissions : 3.7 + (10.2-9.84) + 72.7 - 10.8 = **65.96 ton/yr.**

This exceeds the NOx annual significance threshold by a factor of six. DEIR, Table 4.3-6.

The DEIR indicates the shutdown of Process Heater B-401 reduced daily NOx emissions by 244 lb/day (DEIR, Table 4.3-4). The DEIR also indicates the shutdown of Process Heater B-401 reduced annual NOx emissions by 44 ton/yr. DEIR, Table 4.3-4. However, even assuming 100% of these shutdown emissions were available for the Project, they would not be adequate to offset the daily increases in linehaul NOx emissions as calculated in Table 1. Regardless, 100% of Process Heater B-401 NOx reductions are not available as some of them (33.16 ton/yr) were used to offset NOx emission increases of the Marine Terminal Offload Limit Project. Marine Terminal IS, Table 3.3-2.

The DEIR suggests by omission that more NOx offsets are available than were relied on in Tables 4.3-6 and 4.3-7 by presenting the full boiler shutdown amount without disclosing that most had already been used. The FEIR clarifies that the balance of the NOx reductions from the Process Heater B-401 shutdown, not relied on in Tables 4.3-6 and 4.3-7, were used to offset increases associated with the Marine Terminal Project. FEIR, pp. 3.1-24/25. They are not available to offset the additional increase in NOx emissions resulting from the increase in locomotive linehaul emissions as calculated in Table 1, assuming the full transit distance within California. Thus, the revised increase in daily and annual NOx emissions are a significant unmitigated air quality impact when the correct travel distance of locomotives is used to estimate emissions.

The increase in daily ROG emissions from all Project sources, including the revised locomotive linehaul emissions, is 70.4 lb/day,[35] which exceeds the ROG daily significance threshold of 54 lb/day by 30%. Similarly, the increase in annual ROG emissions from all Project sources, including the revised locomotive linehaul emissions is 11.4 ton/yr,[36] which exceeds the ROG annual significance threshold of 10 ton/yr. Thus, daily and annual ROG emissions from the Project are significant unmitigated air quality impacts that were not disclosed in the DEIR when the correct travel distance of locomotives is used to estimate emissions.

Finally, even if emissions were based only on the track length within the BAAQMD, rather than the entire State, the Project would still exceed the NOx daily significance threshold if the actual UP track length going south out of the District (90 miles) was used in the calculations, rather than the average of the UP and BNSF track lengths (67 miles). The distance to the eastern boundary of the District is 44 miles and to the southern boundary, 90 miles. The 67 miles used in the DEIR's linehaul emission calculations is the average of these two (90+44/2 = 67). 6/28/13 Phillips Response Letter, p. 12, Response to Comment #15. However, nothing in the EIR would prevent 100% of the trains from using the UP track going south out of the District. The daily

[35] Total revised daily ROG emissions : 18.1 + 25.1 + (3.8-3.63) + 27 = **70.4 lb/day.**

[36] Total revised annual ROG emissions : 3.3 + 4.6 + (0.5-0.47) + 3.5 = **11.4 ton/yr.**

NOx emission increase, assuming the UP track length of 90 miles within the District would be 57 lb/day, which exceeds the CEQA significance threshold of 54 lb/day.[37]

3. Underestimates Steam Boiler Emissions

The DEIR emission estimates assumed a new 140 MMBtu/hr boiler would be required to supply steam for the Project. The net emission calculations in Comment IV.B.2 that correct the linehaul underestimate assume this new boiler. However, during BAAQMD permitting, Phillips 66 removed the new 140 MMBtu/hr boiler and revised the emissions to assume steam demand would be met by using surplus low pressure steam, improving efficiency of existing steam consumers, and by increasing high pressure steam production at the Steam Power Plant. This resulted in a reduction in emissions from supplying steam, compared to emissions claimed in the DEIR. 4/30/13 Phillips Response Letter, p. 4, Response to Comment #7.

However, these changes disclosed in the BAAQMD permitting file are small, compared to increases from other Project components in the DEIR, and thus do not materially affect any of the conclusions in Comment IV.B.2. Further, as discussed below in Comment IV.C.3, the NOx emissions from supplying steam at the Steam Power Plant are actually significantly higher than claimed in the Phillips permitting application (15.6 ton/yr compared to only 3.7 ton/yr assumed in the DEIR). See Comment IV.C.3. These revised emissions alone are sufficient by themselves to exceed the BAAQMD NOx annual significance threshold.

IV.C. Other Emissions from The Project Are Omitted

The DEIR estimated emissions from new equipment that would be added by the Project plus certain associated mobile source emissions, including a new boiler, tanks and piping, locomotives, and truck and commuter trips. The locomotive emissions are discussed in Comment IV.B.2. DEIR, Tables 4.3-6 & 4.3-7, p. 4.3-21.

The equipment required to recover propane and butane from the refinery fuel gases and to remove sulfur from the recovered products requires various inputs to operate. This results in increases in emissions above the CEQA baseline that were not included in the DEIR's analysis. These include: (1) use of the recovered propane and butane elsewhere in California; (2) electricity; (3) hydrogen; (4) emissions from increased sulfur removal; and (4) certain increases in emissions from generating steam at the existing Steam Plant to support the Project. Each omitted emission source is discussed below.

The BAAQMD files indicate that Phillips conceded there would be an increase in the throughput of the Air Liquide Hydrogen Plant and an increase in the Sulfur Recovery

[37] From AQS Attach. 1, pdf 19 (lb/day): Linehaul emissions within California = small line haul from Richmond terminal to refinery + large linehaul from boundary of BAAQMD to Richmond terminal. Linehaul emissions for NOx in lbs/day: 18.97 + 57.06(90/67) = **95.6 lb/day.** The net increase = 20.4 + (79.0-76.03) + 95.6 - 62.3 = or **56.7 lb/day** > 54 lb/day.

Units, but in both cases, less than the permitted levels.[38] However, for purposes of CEQA compliance, the permitted levels are not material, but rather the increase relative to a historic baseline. These emissions were not included in the Project totals.

1. Propane/Butane Combustion In California

The DEIR failed to include criteria pollutant emissions from burning or otherwise using the recovered propane/butane anywhere. The recovered propane/butane is being produced to meet commercial-grade standards with less than 5 ppm hydrogen sulfide (H_2S). 6/28/13 Phillips Response Letter, p. 2. Commercial-grade propane is used as a fuel.[39] Thus, it is reasonably foreseeable that the produced propane/butane would be used as fuel, increasing criteria pollutant and GHG emissions.

The BAAQMD permitting file further discloses that Phillips currently sells butane from the Rodeo Refinery in California. 4/30/13 Phillips Response Letter. Thus, emissions from the use of propane/butane as a fuel within California are a reasonably foreseeable impact caused by the Project and must be evaluated. 14 Cal Code Regs. §§15064(d)(3) and 15358(a)(2).

There is nothing in the DEIR or FEIR that would prohibit Phillips from selling 100% of the recovered propane/butane for new uses as a fuel anywhere, including within California. Thus, unless the County imposes a condition requiring that 100% of the propane/butane is sold outside of the jurisdiction of CEQA or for non-combustion, non-emitting uses, the FEIR must include criteria pollutant emissions from its use and mitigate the resulting impacts, which are significant as demonstrated below.

I estimated the criteria pollutant emissions from combusting 100% of the Project's propane/butane in boilers within California. The results of my calculations are summarized in Table 2.

[38] Phillips 66 Propane Recovery Project Issues, BAAQMD Notes; Letter from Don Bristol, Phillips 66, to Brian Lusher, BAAQMD, Re: Response to Incomplete Letter 3/1/13, April 30, 2013, pp. 3 (Response to Comment #4) and 6 (Response to Comment #8).

[39] See, e.g., Tesoro Safety Data Sheet, Propane - Commercial Grade, Available at: http://www.tsocorp.com/stellent/groups/corpcomm/documents/tsocorp_documents/msdspropane.pdf.

Table 2
Emissions from Combusting Propane/Butane
Within California

	Emission Factor	Emissions	
	(lb/10^3 gal)	(lb/day)	(ton/yr)
PROPANE			
Total PM	0.7	123	22.5
N0x	13	2,293	418.5
CO	7.5	1,323	241.4
ROG	0.8	141	25.8
BUTANE			
Total PM	0.8	128	23.3
N0x	15	2,394	436.9
CO	8.4	1,341	244.7
ROG	0.9	144	26.2

Emission factors from AP-42, Table 1.5-1.
Propane: 4,200 BPD; Butane: 3,800 BPD
ROG = TOC - CH_4.

These emissions are compared with significance thresholds established in the DEIR for evaluating the operational air quality impacts of the Project (DEIR, p. 4.3-14) in Table 3. This comparison shows that the emissions from burning recovered propane and butane exceed significance thresholds for NOx, PM10, and ROG by a large margin and thus must either be mitigated or the EIR must prohibit the sale of recovered propane/butane within California for fuel. The emissions of CO are also large and significant, but the DEIR failed to establish a significance threshold for this pollutant.

Table 3
Comparison of Emissions from Combusting Propane/Butane
Within California With Significance Criteria

	TOTAL EMISSIONS		SIGNIFICANCE CRITERIA	
	(lb/day)	(ton/yr)	(lb/day)	(ton/yr)
Total PM	251	45.8	82	15
N02	4,687	855.4	54	10
CO	2,664	486.1		
ROG	285	52.0	54	10

Assumes 100% of PM from combustion is PM10
DEIR, p. 4.314

2. Increase In Hydrogen

The hydrotreater that will be installed as part of the Project requires hydrogen to react with sulfur and convert it into forms that can be removed. The DEIR claims that the amount of hydrogen present in the existing gas streams is adequate to supply the increased hydrogen. DEIR, p. 3-25.

The BAAQMD questioned this assumption and asked Phillips to accept a permit condition stating no hydrogen would be used at the new hydrotreater. Phillips declined and admitted that ". . . there are short periods when hydrogen from a hydrogen plant will need to be supplied. These periods would typically be during startup of the hydrotreater catalyst system." 4/30/13 Phillips Response Letter, p. 3, Response to Comment #4. Phillips has not quantified the amount of additional hydrogen that will be required nor the resulting emissions. Hydrogen plants include a furnace and vents that are significant sources of criteria pollutant and GHG emissions, including specifically, the hydrogen plant that would supply this Project.[40] The EIR must quantify all of the emissions that would be generated as a result of the Project.

3. Increase in Steam

The DEIR disclosed that steam would be provided by either a new 140 MMBtu/hr steam boiler or by the existing Steam Power Plant (SPP). DEIR, pp. ES-5, 3-7, 3-20. The DEIR included emissions only for the new 140 MMBtu/hr boiler. DEIR, Tables 4.3-6 and 4.3-7. Since the DEIR was released, Phillips has elected to use the existing SPP to generate the required steam. The NOx emissions from the existing SPP are higher than those disclosed in the DEIR, as explained below.

Correspondence in the BAAQMD file indicates steam demand will be met by using surplus low pressure steam currently vented, improving steam generation efficiency, and by increasing high pressure steam production at the SPP. The increase in high pressure steam would be provided by increasing the firing rate of natural gas in the duct burners by 45 MMBtu/hr. It is unclear whether additional fuel would also have to be fired in the associated gas turbines.

The emissions included in the BAAQMD permit files (which vary from the emissions identified in the DEIR) are based only on increasing the firing rate of natural gas in the duct burners by 45 MMBtu/hr, and assume very low (and unsupported) emission factors. The emission factor used for NOx, for example, is 0.017 lb/MMBtu (4.5 ppm @ 15% O_2). 4/30/13 Phillips Response Letter, pp. 5-6, Response to Comment #7.

Based on my experience permitting many similar projects with duct burners, they typically emit much more NOx than assumed in the 4/30/13 Phillips calculations (4/30/13 Phillips Response Letter, pp. 5-6). Duct burner emissions are low only if they are located in a heat recovery steam generator equipped with modern selective catalytic

[40] Air Liquide, Hydrogen Plant Project, Application for Authority to Construct and Major Facility Review Permit, Rodeo, California, October 2005.

reduction to control NOx. No such arrangement is described in the DEIR (Sec. 3.3.2.9) or the original 1985 BAAQMD engineering evaluation.[41] The subject gas turbines/duct burners are permitted to emit 83 lb/hr when firing 1048 MMBtu/hr for all turbine/duct burners combined.[42] This corresponds to a NOx emission factor of 0.079 lb/MMBtu (83/1048 = 0.079). This NOx emission factor is nearly five times higher than the one used in Phillips' duct burner NOx emission calculations.

Using this revised emission factor to estimate NOx emissions from increased steam demand yields 15.6 ton/yr NOx (0.079 x 45 x 8760/2000 = 15.6) or four times more than disclosed in the DEIR (3.7 ton/yr) for the new 140 MMBtu/hr boiler. The originally proposed new boiler evaluated in the DEIR should be more efficient and emit less NOx, etc. than the old SPP due to use of modern technology and current Best Available Control Technology (BACT) controls such as selective catalytic reduction (SCR). The NOx emissions from supplying just the steam for the hydrotreater exceed the NOx significance threshold of 10 ton/yr and are thus a significant undisclosed air quality impact of the Project.

4. Increase In Sulfur Removal

The Project will increase the throughput of the existing Sulfur Recovery Units (SRU) by about 135 ton/yr of sulfur. DEIR, Fig. 3-6; 5/13/13 BAAQMD Notes, p. 2; 6/28/13 Phillips Response Letter, pp. 6-8, Response to Comment #8. The Refinery uses the Claus process to convert acid gas to liquid sulfur, which is sold. This involves combusting acid gas, which would increase NOx, CO, VOC and other emissions. The resulting elemental sulfur is sold, which involves truck emissions. Thus, the increase in throughput of the SRU would be accompanied by increases in combustion emissions from the Claus unit and the trucks used to transport the recovered sulfur product to market. The resulting increase in emissions was not disclosed in the DEIR or FEIR. The information in the files I reviewed is not adequate to estimate these emissions. It did not include, for example, the increase in acid gases that would be processed by the Claus unit, the criteria pollutant emission factors for the Claus furnace, or the number of additional truck trips that would be required to transport the sulfur to market.

5. Increase In Electricity Generation

The Project will require 1.28 MW electricity or 10,900 MW-hour of electricity DEIR, pp. 3-23, 3-28. The generation of this electricity at off-site facilities will increase criteria pollutant and GHG emissions that were not included in the DEIR. The information in the files I reviewed did not include any emission factors in pounds of pollutant per megawatt hour, which are required to estimate these emissions.

6. Emissions from Changes in Feedstock Quality

[41] BAAQMD, Engineering Evaluation, Union Oil Company, Gas Turbine Cogeneration Facility, November 8, 1985.

[42] Phillips 66 LPG Recovery Project, Permit Limit Summary, BAAQMD, Condition ID 18629.

The currently proposed rail spur project at the Santa Maria Facility would allow the import of DilBits. These are rich in the propane/butane fractions required to supply the subject Project at the Rodeo Refinery. If said DilBits were routed directly to the Rodeo Refinery or if they were processed at Santa Maria to generate semi-refined products for Rodeo, which are feed for the propane/butane Project, this would result in public health impacts that were not disclosed in the DEIR.

DilBits contain large amounts of light material that distill below 149 C and are thus very volatile. This material can be emitted to the atmosphere from storage tanks and equipment leaks of fugitive components (pumps, compressors, valves, fittings) in much larger amounts than other heavy crudes and their byproducts that are currently processed at the Rodeo Refinery.

The diluent is a low molecular weight organic material with a high vapor pressure that contains not only propane and butane that would be recovered by the Project, but also high levels of other VOCs, sulfur compounds, and hazardous air pollutants (HAPs). These would be emitted during unloading and would be present in emissions from tanks and fugitive components. The DEIR did not disclose the potential presence of diluent and made no attempt to estimate these diluent-derived emissions.

The composition of some typical diluents/condensates used in DilBits is reported on the website, www.crudemonitor.ca.[43] The DEIR does not identify the specific diluents that would be used by the Project or even that diluents would be present. The CrudeMonitor information indicates that diluent contains very high concentrations (based on 5-year averages, v/v basis of the hazardous air pollutants benzene (7,200 ppm to 9,800 ppm); toluene (10,300 ppm to 25,300 ppm); ethyl benzene (900 ppm to 2,900 ppm); and xylenes (4,600 ppm to 23,900 ppm).

The sum of these four compounds is known as "BTEX" or benzene-toluene-ethylbenzene-xylene. The BTEX in diluent ranges from 27,000 ppm to 60,900 ppm. The BTEX in DilBits, blended from these materials, ranges from 8,000 ppm to 12,300 ppm.[44] Similarly, the BTEX in synthetic crude oils (SCOs), which also could be imported via the

---

[43] Condensate Blend (CRW) - http://www.crudemonitor.ca/condensate.php?acr=CRW; Fort Saskatchewan Condensate (CFT) - http://www.crudemonitor.ca/condensate.php?acr=CFT; Peace Condensate (CPR) - http://www.crudemonitor.ca/condensate.php?acr=CPR; Pembina Condensate (CPM) - http://www.crudemonitor.ca/condensate.php?acr=CPM; Rangeland Condensate (CRL) - http://www.crudemonitor.ca/condensate.php?acr=CRL; Southern Lights Diluent (SLD) - http://www.crudemonitor.ca/condensate.php?acr=SLD.

[44] DilBits: Access Western Blend (AWB) -http://www.crudemonitor.ca/crude.php?acr=AWB; Borealis Heavy Blend (BHB) -http://www.crudemonitor.ca/crude.php?acr=BHB; Christina Dilbit Blend (CDB) - http://www.crudemonitor.ca/crude.php?acr=CDB; Cold Lake (CL) - http://www.crudemonitor.ca/crude.php?acr=CL; Peace River Heavy (PH) - http://www.crudemonitor.ca/crude.php?acr=PH; Seal Heavy (SH) - http://www.crudemonitor.ca/crude.php?acr=SH; Statoil Cheecham Blend (SCB) - http://www.crudemonitor.ca/crude.php?acr=SCB; Wabasca Heavy (WH) - http://www.crudemonitor.ca/crude.php?acr=WH; Western Canadian Select (WCS) - http://www.crudemonitor.ca/crude.php?acr=WCS; Albian Heavy Synthetic (AHS) (DilSynBit) - http://www.crudemonitor.ca/crude.php?acr=AHS.

Santa Maria rail spur project or the Ferndale Rail Terminal and barged to Rodeo, ranges from 6,100 ppm to 14,100 ppm.[45] These are very high concentrations that were not considered in the DEIR or FEIR. These levels are high enough to result in significant worker and public health impacts.

The CrudeMonitor information also indicates that these diluents contain elevated concentrations of volatile mercaptans (9.9 to 103.5 ppm), which are highly odiferous and toxic compounds that could result in significant odor and nuisance impacts. Mercaptans can be detected at concentrations substantially lower than will be present in emissions from the tanks and fugitive emission, including pumps, valves, flanges, and connectors.[46] In fact, mercaptans are added to natural gas in very tiny amounts so that the gas can be smelled to facilitate detecting leaks.

Thus, recovering propane and butane from semi-refined products generated from these tar sands crudes or from directly refining these crudes would emit VOCs, HAPs, and malodorous sulfur compounds, not found in comparable levels in conventional crudes currently handled at the Refinery. There are no restrictions on the feedstock composition nor any requirements to monitor emissions for these HAPs from tanks and leaking equipment where DilBit-blended and other light crude fraction would be handled.

7. CO Emissions Were Not Estimated

The Project would significantly increase emissions of carbon monoxide (CO), a criteria pollutant. Carbon monoxide is emitted from all combustion sources, including locomotives, trucks and commuter auto trips, steam generation, and combustion of the recovered propane and butane at fired sources. The DEIR is silent on CO emissions from the entire Project.

IV.D. Decrease in SO_2 Emissions Is Not Supported

The DEIR claims that the Project would reduce SO2 emissions by at least 50%, resulting in an SO2 emission decrease of at least 180 ton/yr. DEIR, pp. ES-2, 3-5, 4.3-19. The emission inventory in Table 4.3-7 takes credit for a reduction in SO2 emission of 172.4 ton/yr. DEIR, Table 4.3-7. The BAAQMD Permit Application made a similar claim. However, there it claimed a reduction of 174.7 ton/yr, of which 7.61 ton/yr was proposed to offset Project SO2 increases and the balance would be banked as Emission

---

[45] SCOs: CNRL Light Sweet Synthetic (CNS) -http://www.crudemonitor.ca/crude.php?acr=CNS; Husky Synthetic Blend (HSB) -http://www.crudemonitor.ca/crude.php?acr=HSB; Long Lake Light Synthetic (PSC) -http://www.crudemonitor.ca/crude.php?acr=PSC; Premium Albian Synthetic (PAS) - http://www.crudemonitor.ca/crude.php?acr=PAS; Shell Synthetic Light (SSX) - http://www.crudemonitor.ca/crude.php?acr=SSX; Suncor Synthetic A (OSA) - http://www.crudemonitor.ca/crude.php?acr=OSA; Syncrude Synthetic (SYN) - http://www.crudemonitor.ca/crude.php?acr=SYN.

[46] American Industrial Hygiene Association, Odor Thresholds for Chemicals with Established Occupational Health Standards, 1989; American Petroleum Institute, Manual on Disposal of Refinery Wastes, Volume on Atmospheric Emissions, Chapter 16 - Odors, May 1976, Table 16-1.

Reduction Credits. BAAQMD Permit Ap., p. 17. However, Phillips subsequently withdrew its banking application, casting doubt on its claim of a SO2 reduction.

Thus, there is no support, in either the DEIR record or the BAAQMD permitting record, for the claimed reduction in SO2 emissions. Emission reductions used to offset emission increases must be permanent, real, and quantifiable. There is no evidence that the claimed SO2 emission reductions meet any of these criteria. In fact, claimed reductions could be a myth if the Refinery feedstock is modified to include a larger proportion of higher sulfur tar sands crudes than currently refined. Such crudes could reach the Refinery via the related Santa Maria rail spur project or the Ferndale rail terminal by barge down the Pacific coast.

V. CUMULATIVE AIR QUALITY IMPACT ANALYSIS IS INADEQUATE

The DEIR included only the Marine Terminal project, the temporary boiler, and an SO2 transfer proposal in the list of cumulative projects. DEIR, Sec. 5.4.3.3. However, the DEIR and FEIR fail to disclose the cumulative impacts that would result from other currently proposed projects that would affect the amount and composition of feedstock refined at Rodeo, compared to CEQA baseline feedstock. Changes in baseline feedstock as explained in these comment, i.e., tar sands crudes such as DilBits, and increased amounts of semi-refined materials from the Santa Maria Facility, would increase emissions of all criteria pollutants and hazardous air pollutants at most all emission sources in the Refinery.

First, as discussed in Comment II, two projects are proposed at the Santa Maria Facility that would directly impact Rodeo. These would send increased amounts of gas oil and naphtha to Rodeo for processing, increasing emissions from many refining units compared to the CEQA baseline. A rail spur is also proposed for Santa Maria that would allow the import of tar sands crudes. These tar sands crudes would change the chemical composition of Rodeo feedstocks, as described in Comment IV.C.6 and Attachment 2. These feedstocks, for example, would increase emissions of hazardous air pollutants from tanks, compressors, pumps, valves and flanges throughout the Refinery. They would also increase NOx and SO2 emissions from fired sources throughout the Refinery, relative to the CEQA baseline.

Second, as also discussed in Comment II, Phillip 66's Ferndale Refinery is permitted to construct a rail terminal, which will facilitate barging tar sands crude to the Rodeo Marine Terminal. The Rodeo Marine Terminal was recently permitted to import increased amounts of crude. This would also change the chemical composition of Rodeo feedstocks, as described in Comment IV.C.6 and Attachment 2, compared to the CEQA baseline feedstock.

These directly related projects will cumulatively increase air emissions above the CEQA baseline. They must all be evaluated together in a revised DEIR to determine cumulative air quality impacts.

EXHIBIT 4

Stacey P. Geis (CABN 181444)
Wendy S. Park (CABN 237331)
Elizabeth B. Forsyth (CABN 288311)
EARTHJUSTICE
50 California Street Ste. 500
San Francisco, CA 94111
Tel: 415-217-2000
Fax: 415-217-2040
Email: wpark@earthjustice.org,
eforsyth@earthjustice.org, sgeis@earthjustice.org

Attorneys for Petitioners

IN THE SUPERIOR COURT OF THE STATE OF CALIFORNIA
IN AND FOR THE COUNTY OF KERN

ASSOCIATION OF IRRITATED RESIDENTS, CENTER FOR BIOLOGICAL DIVERSITY, and SIERRA CLUB, all California Nonprofit Corporations, Petitioners, v. KERN COUNTY BOARD OF SUPERVISORS and KERN COUNTY PLANNING AND COMMUNITY DEVELOPMENT DEPARTMENT, Respondents. PARAMOUNT PETROLEUM CORPORATION, a California Corporation; and ALON U.S.A, a Texas Corporation, Real Parties in Interest.	**Case No.** **VERIFIED PETITION FOR WRIT OF MANDATE**

Petitioners Association of Irritated Residents, Center for Biological Diversity, and the Sierra Club (collectively, "Petitioners") bring this action on their own behalf, on behalf of their members, on behalf of the general public, and in the public interest and hereby allege as follows:

INTRODUCTION

1. On September 9, 2014, the Kern County Board of Supervisors ("Kern County") approved an Environmental Impact Report ("EIR") for the Alon Bakersfield Refinery Crude Flexibility Project ("Project"). This Project would entail a five-fold increase in the Alon Bakersfield Refinery's ("Refinery") capacity to import crude oil from 40 tank cars per day to 200 tank cars per day, or up to 63.1 million barrels of crude per year. This influx of cheap, mid-continent crudes, including Canadian tar sands crude and Bakken crude from North Dakota, would allow the shuttered Refinery to reopen and run at full capacity, processing 70,000 barrels of crude oil per day.

2. The Project's massive ramp-up in oil transport and processing poses alarming health and safety threats to the residents of Bakersfield and to those who live along the crude-by-rail route. Restarting the Refinery will significantly increase harmful air pollution that will only exacerbate the poor air quality and respiratory illnesses that plague San Joaquin Valley communities already unfairly burdened with industrial pollution. The Project entails the transport of highly volatile Bakken crude oil across multiple states, over treacherous and poorly maintained mountain passages, and past Bakersfield High School, without adequate federal and state regulation to ensure the safety of crude by rail transport. The U.S. Transportation Secretary has declared the transport of highly explosive Bakken crude to be "an imminent hazard," as evidenced by a spate of catastrophic train accidents, such as the 2013 derailment of an oil train that exploded and killed 47 people in Lac-Mégantic, Quebec. And by bringing in over 60 million barrels of crude oil into the state each year, the Project will undermine California's stated goal of transitioning from fossil fuels to clean energy.

3. Rather than recognizing and mitigating the Project's significant impacts, the EIR systematically obfuscates and underestimates them in violation of the California Environmental Quality Act ("CEQA").

4. Skewing the entire analysis, the EIR obscures the impact of restarting the Refinery by measuring the Project's impacts as compared to the 2007 operating conditions at the Refinery,

although the Refinery has not refined crude since 2008. Instead, the EIR should have used the Refinery's currently non-operational conditions as the "baseline" for measuring impacts.

5. The EIR further hides the impacts of the Project by severely underestimating air emissions, rail transport impacts, hazardous material release risks, and greenhouse gas emissions.

6. With respect to the Project's air quality impacts, the EIR severely underestimates air emissions by failing to disclose and analyze the mix of crudes or "crude slate" that will actually be refined, including the impacts of refining Bakken and tar sands crudes. Compared to local San Joaquin crudes analyzed in the EIR, Bakken crude emits higher levels of volatile organic compounds ("VOC"), which lead to fine particulate matter and ozone pollution, for which the San Joaquin Valley is already in "extreme non-attainment." Refining tar sands crude also leads to higher greenhouse gas, nitrogen, sulfur, and toxic metals emissions, which the EIR entirely fails to disclose. The EIR also improperly uses unidentified emissions reduction credits from past projects to "offset" the Project's significant VOC emissions, rather than requiring on-site mitigation measures. Lastly, the EIR improperly excludes non-routine emissions, including flaring events, from review. Failure to correct these deficiencies and mitigate the Project's significant air emissions will result in continued deterioration of the Valley's air and local residents' health.

7. With respect to the Project's rail transport activities, the EIR sweepingly brushes aside the Project's significant mainline rail transportation impacts on air pollution, greenhouse gas emissions, hazardous material release risk, and wildlife, on the assumption that CEQA is preempted by federal law regulating mainline rail activities. This rationale is contrary to CEQA's requirement that an EIR disclose a project's significant impacts, regardless of the action agency's authority to regulate these impacts. It also fails to consider Kern County's ability to require mitigation that does not involve the direct regulation of mainline rail activities.

8. The EIR severely underestimates the safety risks of this Project through sloppy math and an incomplete analysis. Based on a simple mathematical error, the EIR calculates the risk of a train accident involving an oil spill to be once every 150 years and concludes this risk is insignificant because an oil spill is unlikely to occur within the Project's 30-year lifetime. Correcting the error, however, results in a risk of accident involving an oil spill once every *30 years*. Even this corrected

figure is still a gross underestimate because it only addresses the risk of an accident in California and not along the entire transport route, and it fails to consider the risk of Bakken-crude transport.

9. Finally, the EIR's analysis of greenhouse gas emissions is riddled with flaws. Rather than analyzing how the Refinery's greenhouse gas emissions will be mitigated, it improperly assumes that because oil refineries must participate in cap-and-trade under AB 32, California's global warming law, the Project's refinery emissions will be reduced to zero and concludes these emissions are not significant. The EIR also unlawfully underestimates greenhouse gas emissions, ignoring emissions from the combustion of end products produced from the imported crude. Consequently, the EIR fails to comply with CEQA's requirement to analyze and mitigate a project's significant greenhouse gas emissions.

10. As a result of these deficiencies, the EIR fails to fully inform the public and decision-makers of the Project's significant health, safety, and environmental impacts, and fails to analyze and mitigate these impacts as CEQA requires. Petitioners therefore seek relief from this Court to void Kern County's certification of the EIR and approval of the Project.

PARTIES

11. Petitioner ASSOCIATION OF IRRITATED RESIDENTS ("AIR") is a California non-profit corporation based in Kern County. AIR formed in 1991 to advocate for clean air and environmental justice in San Joaquin Valley communities. AIR has several dozen members who reside in Kern, Tulare, Kings, Fresno, and Stanislaus Counties. AIR members through themselves, their families, and friends, have direct experience with the many health impacts that arise from the type of pollution emissions associated with this Project.

12. Petitioner CENTER FOR BIOLOGICAL DIVERSITY (the "Center") is a non-profit corporation with offices in San Francisco, Los Angeles, and elsewhere throughout California and the United States. The Center is actively involved in environmental protection issues throughout California and North America and has over 50,000 members, including many throughout California and in Kern County. The Center's mission includes protecting and restoring habitat and populations of imperiled species, reducing greenhouse gas pollution to preserve a safe climate, and protecting air quality, water quality, and public health. The Center's members and staff include individuals who

regularly use and intend to continue to use the areas in Kern County and elsewhere affected by the Project's refinery operations and rail transportation activities, including members who are particularly interested in protecting the many native, imperiled, and sensitive species and their habitats that may be affected by the Project.

13. Petitioner SIERRA CLUB is a national nonprofit organization of approximately 600,000 members. Sierra Club is dedicated to exploring, enjoying, and protecting the wild places of the earth; to practicing and promoting the responsible use of the earth's ecosystems and resources; to educating and encouraging humanity to protect and restore the quality of the natural and human environment; and to using all lawful means to carry out these objectives. Sierra Club's particular interest in this case and the issues which the case concerns stem from Sierra Club's interests in reducing reliance on fossil fuels and protecting the health of vulnerable communities. Sierra Club has approximately 600 members in Kern County and many more along the crude-by-rail transport route for this Project. These members live, work, and recreate in counties that are affected by the proposed crude-by-rail and Refinery operations.

14. By this action, Petitioners seek to protect the health, welfare, and economic interests of their members and the general public and to enforce a public duty owed to them by Kern County. Petitioners' members and staff have an interest in their health and well-being, as well as conservation, environmental, aesthetic, and economic interests in the Central Valley environment. Petitioners' members who live and work in or near the Refinery and along the rail lines radiating out from the terminal have a right to, and a beneficial interest in, Kern County's compliance with CEQA. These interests have been, and continue to be, threatened by Kern County's decision to certify the current EIR and approve the Project in violation of CEQA, and unless the relief requested in this case is granted, will continue to be adversely affected and irreparably injured by the failure of Kern County to comply with the law.

15. Respondent KERN COUNTY PLANNING AND COMMUNITY DEVELOPMENT DEPARTMENT is the lead agency that conducted the environmental review of the Project.

16. Respondent KERN COUNTY BOARD OF SUPERVISORS is the decision-making body who certified the EIR and issued the Notice of Determination approving the Project.

17. Real Party in Interest PARAMOUNT PETROLEUM CORPORATION is a Californian Corporation based in Paramount, California. It is a manufacturer of paving and industrial asphalt products, the applicant and developer of the property upon which the Project is planned to be constructed and operated, and the recipient of the approvals that are the subject of this litigation. The facility at issue here is located at 6451 Rosedale Highway, Bakersfield, California in Kern County.

18. Real Party in Interest ALON U.S.A is headquartered in Texas and is the parent company of Paramount Petroleum Corporation.

JURISDICTION AND VENUE

19. This Court has jurisdiction over this action pursuant to Code of Civil Procedure section 1085, or, in the alternative, pursuant to section 1094.5. Judicial review is governed under Public Resources Code section 21168.5, or, in the alternative, pursuant to section 21168.

20. Venue is proper in this court pursuant to Code of Civil Procedure sections 394 and 395 because the Kern County Board of Supervisors and Kern County Planning and Community Development Department are located within Kern County. Venue is also proper in this court pursuant to Code of Civil Procedure section 393(b) because the Refinery is in Kern County, and the Project's environmental harms will occur in Kern County.

21. This action was timely filed within 30 days of the Kern County Board of Supervisors filing the Notice of Determination on September 10, 2014.

22. Petitioners have provided written notice of their intention to file this petition to the Kern County Board of Supervisors and the Kern County Planning and Community Development Department and are including the notices and proofs of service as Exhibit A pursuant to the requirements of Public Resources Code section 21167.5.

23. Petitioners have served the Attorney General with a copy of their Petition along with a notice of its filing, in compliance with Public Resources Code section 21167.7, and are including the notice and proof of service as Exhibit B.

24. Petitioners do not have a plain, speedy, or adequate remedy at law because Petitioners and their members will be irreparably harmed by the ensuing environmental damage caused by implementation of the Project and the Kern County Planning and Community Development

Department's and the Kern County Board of Supervisors' violations of CEQA.

STATEMENT OF FACTS

The Community and Environmental Setting

25. The Alon Bakersfield Refinery is located within the City of Bakersfield, a city with one of the highest levels of air pollution in the country. Bakersfield is part of the San Joaquin Valley Air Basin, one of two air basins in the U.S. designated "extreme nonattainment" for federal ozone standards. Recently, the San Joaquin Valley Unified Air Pollution Control District ("Air District') proposed the Valley be downgraded from "moderate" to "serious nonattainment" for the federal fine particulate matter standard.

26. The American Lung Association, in its most recent State of the Air Report, gives Kern County a failing grade for both ozone and particulate matter pollution, finding that the region suffers some of the worst air pollution in the nation.[1] These deplorable conditions result in 1,500 premature deaths in the San Joaquin Valley each year and almost one in ten residents suffering from asthma.[2] One in six Valley children will be diagnosed with the disease, which translates into over 23,000 asthma attacks and 16,310 days with upper respiratory symptoms for asthmatic children per year. [3] Further, recent research has found that almost one-third of residents in Kern County face both high environmental risks (such as toxic air pollution) and social risk factors (such as poverty), which in turn increases susceptibility to environmental hazards and increases risks of health problems. The economic toll of the Valley's poor air quality ranges from $3 billion to $6 billion in health costs and lost productivity annually.[4]

25. Several schools are within a few miles of the Refinery, including Vista West Continuation High School, which is less than half a mile from the Refinery's nearest area in which a hazardous material release could occur. Residential neighborhoods are approximately one mile away, west and south of the Refinery. The Kern River is 1000 feet south of the Refinery and

---

[1] *See generally* http://www.stateoftheair.org.
[2] *Ibid*.; http://www.lung.org/associations/states/california/advocacy/fight-for-air-quality/healthy-growth-leaders/san-joaquin-valley-why-healthy-growth.html.
[3] https://www.fresnostate.edu/chhs/cvhpi/documents/cvhpi-jointcenter-sanjoaquin.pdf.
[4] *Ibid*.; http://calstate.fullerton.edu/news/2008/091-air-pollution-study.html.

provides an open space recreation area known as the Kern River Parkway, including parks and trails. Hiking and riding trails run through the area of the Parkway that is directly south of the Refinery and are frequently used by local residents.

27. The Refinery is not currently processing crude oil. Due to a bankruptcy of the prior owner, the Refinery ceased refining crude oil in 2008. It was purchased by Alon in 2010, and in June 2011, after more than two years of inactivity, it was refashioned to convert intermediate vacuum gas oil into finished products and began intermittently operating. No crude oil refining was resumed. Refining operations were suspended entirely in December 2012, due to increasing prices of local San Joaquin Valley feedstocks.

28. A Burlington Northern Santa Fe ("BNSF") rail line bisects the Project site and downtown Bakersfield in an east-west direction. This line, which will be used for the Project's crude-by-rail transport, passes immediately adjacent to Bakersfield High School and Mercy Hospital.

The Project

29. On August 23, 2012, Paramount Petroleum applied to the Kern County Planning and Community Development Department for a Modification to the Precise Development Plan for the Alon Bakersfield Refinery, to facilitate the Project.

30. The proposed Project would construct and expand rail, transloading, and storage facilities at the Refinery to allow for the offloading of 740 unit trains containing over 63.1 million barrels of crude per year, or over 173,000 barrels per day (nearly 5.5 million gallons). The five-fold expansion of the terminal's unloading capacity, from 40 tank cars per day to over 200 tank cars per day, is the largest crude-by-rail project in California, twice the size of the next largest project.

31. The Project would "allow greater flexibility for the existing Refinery to utilize a variety of crude oils that can be processed on site," which is to say that the Project would facilitate the transport and refining of cheaper "cost-advantaged" crudes, including Bakken crude oil from North Dakota and tar sands crude oil from Canada.

32. Transporting large volumes of crude oil long distances by train carries significant risk. Based on federal rail safety data, this dramatic increase in rail transport of crude oil will

increase the likelihood of a rail accident where hazardous materials are released from once every 9,000 years in California to once every 30 years in California. This means that this Project is nearly certain to cause an accident in California involving a spill of crude oil in the stated 30-year life of the Project. And this is likely a gross underestimate of the accident risk, since this accident risk does not include the entire length of rail travel from North Dakota and Canada to Bakersfield, California.

33. The risk of accident may be even greater than the federal data suggests. The past risk of accidents does not take into account the increased risk posed by increased tonnage and wear and tear on the track and structures from increasing shipments of crude-by-rail. Moreover, California has approximately 5,000-7,000 railroad bridges, many of which are over a century old, but these bridges are not inspected by any entity in the California state government, even though they carry thousands of rail cars containing hazardous materials and thousands of passengers daily. These aging and unmonitored rail lines travel through high hazard areas in the state, including areas of vulnerable natural resources and urban areas. Moreover, earthquake faults in California are located along rail lines in many areas, especially in urban areas. All of these factors contribute to heightened risk of a catastrophic rail accident in California.

34. Kern County and the San Joaquin Valley in particular are at high risk of disastrous crude-by-rail derailments. For the trains serving the Project to/from the east, the freight rail track runs through the Tehachapi Mountains, an area identified by the California Interagency Rail Safety Working Group as a "high hazard area." This rail track includes steep grades, extreme track curvature, and a single track through the majority of the corridor. The elevation loss of this corridor is approximately 3600 feet from Tehachapi to Bakersfield, and the grade is so steep that it includes the famous "Tehachapi loop" where the railroad line must loop back under itself to make the grade. Crude shipments through the Tehachapi Mountains pose significant accident risks threatening public safety and sensitive natural areas.

35. A train accident involving Bakken crude oil would be particularly devastating. Bakken crude oil is more volatile and explosive than heavy crude oil, and rail safety regulations have not yet caught up to the boom in Bakken transport. In July 2013, a train carrying Bakken crude derailed in Lac-Mégantic, Canada, and exploded, killing 47 people and decimating half of downtown

Lac-Mégantic. Unfortunately, Lac-Mégantic is not the only recent catastrophic accident involving Bakken crude. Since Lac-Mégantic, several other major accidents have occurred involving Bakken crude in the last year, including in Lynchburg, Virginia (derailment causing 30,000 gallons to spill into the James River), Casselton, North Dakota (derailment spilling 400,000 gallons of oil and requiring the evacuation of 2,000 people), Edmonton, Canada (derailment causing a fireball which burned several homes to the ground), and Philadelphia, Pennsylvania (derailment over the Schuylkill River near the University of Pennsylvania). Because of the recent spate in catastrophic Bakken train accidents, the U.S. Transportation Secretary has declared the transport of Bakken crude to be "an imminent hazard," such that a "substantial likelihood that death, serious illness, severe personal injury, or a substantial endangerment to health, property, or the environment may occur." 49 U.S.C. § 5102(5).

36. Not only would the Project entail the transport of large quantities of crude oil by rail, but the Project would construct process unit upgrades and modifications to allow the Alon Bakersfield Refinery, which has not processed crude oil for over five years, to run at its full capacity of 70,000 barrels per day. The reactivation of this facility will cause significant air impacts in an area already plagued by the worst air quality in the nation.

37. Refining these new types of crudes brought in by rail, including Bakken and tar sands crudes, poses unique environmental, health, and safety impacts, compared to the local San Joaquin Valley crudes the Refinery once processed.

38. Bakken crude is highly volatile, vaporizes easily, and leaves waxy deposits in rail cars and on equipment, which can be damaging and corrosive. These properties result in a higher risk of accidents and hazardous material release at the Refinery. Bakken crude can contain high levels of benzene, a known human carcinogen, and the refining of Bakken crude can significantly increase VOCs and toxic air contaminant emissions. VOCs are a component in the formation of ozone, and the San Joaquin Valley is already in "extreme non-attainment" of the 8-hour ozone national ambient air quality standards. Thus, refining Bakken crude will only exacerbate the air quality of an already highly-polluted area.

39. Refining tar sands crude oil also poses unique air quality and public health risks

compared to other crudes. According to the U.S. Geological Survey ("USGS"), tar sands crudes contain more heavy metals and air pollutants than other more commonly used heavy crudes. Specifically, the USGS states that "'natural bitumen,' the source of all Canadian tar sands-derived oils, contains 102 times more copper, 21 times more vanadium, 11 times more sulfur, 6 times more nitrogen, 11 times more nickel, and 5 times more lead than conventional heavy crude oil." The process to remove sulfur and other contaminants can be corrosive. Corrosion of refinery equipment poses a major public health and safety threat, as seen in the August 2012 accident at the Chevron Richmond, California refinery, which was caused by corroded pipes due to increasing the sulfur content of the processed crude. Processing heavier tar sands is also more energy-intensive, emits more greenhouse gases and pollutants, and produces more coke (a solid coal-like product of petroleum refining) than other types of crude, which could result in increased fugitive dust emissions and higher exposure to toxic air contaminants such as lead.

40. The Project will also have major climate change impacts. Restarting a petroleum refinery, transporting crude oil in diesel rail cars over 1,500 miles, and bringing in more than 60 million barrels of cheap fossil fuels into California to be refined and ultimately combusted, will all produce significant greenhouse gas emissions. This Project will thus frustrate California's stated efforts to reduce greenhouse gas emissions and combat climate change.

41. In sum, by dramatically increasing rail traffic of explosive crude oil, restarting a shuttered refinery in an area with the worst air pollution in the country, and bringing in large quantities of cheap fossil fuels into California, this Project will have significant safety, environmental, health, and climate impacts, all of which should have been properly analyzed under CEQA.

The Approval Process

42. On September 19, 2013, the Kern County Planning and Community Development Department issued a Notice of Preparation of an EIR for the Project, including an Initial Study supporting the need for an EIR.

43. On October 14, 2013, the Air District submitted comments on the Notice of Preparation. Among other things, the Air District commented that the County inappropriately used

the year 2007 as the baseline year for assessing significance of air quality impacts in its Initial Study. The Air District noted that 2007 "reflects the environmental setting in effect 6-7 years ago, which appears to be remote from the conditions in effect at the time the environmental analysis commenced."

44. On May 22, 2014, the Kern County Planning and Community Development Department released a Draft EIR for public review and comment.

45. Despite the Air District's comments, the Draft EIR failed to correct the baseline for the Project. The Draft EIR also omitted fundamental information necessary to evaluate the EIR's conclusions, including underlying assumptions and calculations for the EIR's air emissions analysis, data concerning the properties of Bakken crude, and an objective description of the Project's crude slate. On June 13, 2014, Petitioners' counsel requested the missing information from the Kern County Planning and Community Development Department.

46. Given these informational gaps that precluded meaningful comment on the EIR and the Project's complexity, Petitioners' counsel requested an extension of the 45-day comment period. On June 23, 2014, the Kern County Planning and Community Development Department denied the request. The County's response also failed to provide the missing information requested by Petitioners' counsel.

47. Association of Irritated Residents, Center for Biological Diversity, Center on Race, Poverty & the Environment, Communities for a Better Environment, and Sierra Club (collectively, the "Community Groups") submitted timely comments on July 7, 2014. These comments echoed the Air District's comments that the Draft EIR was fundamentally flawed because it improperly used the Refinery's 2007 operations as the baseline, even though the Refinery had not refined crude oil since 2008. The comments further explained, among other things, that the Draft EIR failed to fully disclose the impacts of processing Bakken and tar sands crudes brought in by the Project; failed to properly disclose and analyze the Project's greenhouse gas emissions; and failed to study the mainline rail operations of the Project, including the impacts on air pollution, greenhouse gases, wildlife, and public safety.

48. Less than two months later, on August 27, 2014, the Kern County Planning and

Community Development Department released the final EIR and response to comments.

49. The Community Groups submitted comments on September 8, 2014, explaining that many of the issues raised in their previous comment letter were still unaddressed, and that the EIR included new disclosures that the public had not had a chance to review, including a clear acknowledgment of the Project's potential to process Bakken and tar sands crude oils. These comments also highlighted the simple mathematical error that severely underestimated the risk of a train accident involving a crude oil spill. The comments requested that the EIR be revised and recirculated.

50. Dr. Phyllis Fox, an environmental engineer with over 40 years of experience, also submitted comments on the Final EIR. Among other things, Dr. Fox explained that the EIR underestimated VOC and toxic air emissions by basing emissions projections off of "Lost Hills" crude, a San Joaquin Valley crude, rather than the Bakken crudes the EIR acknowledged it was most likely to import. Dr. Fox explained that modeling impacts based on Lost Hills crude "resulted in a significant underestimate of VOC and [toxic air contaminant] emissions and hazards from accidents" because of material differences in physical properties of the two crudes.

51. Dr. Fox also criticized the EIR's use of "emission reduction credits," credits previously earned for reducing emissions, to "offset" the Project's significant VOC emissions. She pointed out that "[o]n a common sense level, it is not logical to assume that offsets, which rely on emission reductions that may have occurred decades ago in a different location and with a different chemical makeup, will do anything to counteract contemporary emission increases from petroleum product gases in an air basin plagued with air quality problems."

52. Julia May, a senior scientist at Communities for a Better Environment, also submitted comments on the Final and Draft EIRs. Among other things, she criticized the lack of information on potential emergency flaring events at the Refinery, i.e., combustion of excess gases and entrained liquids in an open flame using oxygen from the ambient air to relieve over-pressured refinery equipment. She explained that flaring emissions alone have the potential to exceed CEQA emissions thresholds, and that failure to include these emissions in air emissions calculations resulted in a gross underestimate of the Project's air quality impacts.

53. On September 9, 2014 the Kern County Board of Supervisors held a three-hour public hearing on the Project, but limited public comment to a little over an hour. The Board approved the Project that day – a mere 13 days after the final EIR was released – without correcting the deficiencies identified by the Air District, the Community Groups, Dr. Fox, or Julia May.

CEQA LEGAL BACKGROUND

54. The California Environmental Quality Act, Public Resources Code §§ 21000-21177, is a comprehensive statute designed to provide for long-term protection of the environment. It accomplishes this in two ways. First, CEQA is designed to inform decision-makers and the public about the potential significant environmental effects of a project. (Cal. Code Regs., tit. 14, § 15002(a)(1) (hereinafter "CEQA Guidelines").) Such disclosure ensures that "long term protection of the environment . . . shall be the guiding criterion in public decisions." (Pub. Res. Code § 21001(d).) The EIR is the "heart" of this requirement. (See *No Oil, Inc. v. City of Los Angeles* (1974) 13 Cal.3d 68, 84.) The EIR has been described as "an environmental 'alarm bell' whose purpose it is to alert the public and its responsible officials to environmental changes before they have reached ecological points of no return." (*County of Inyo v. Yorty* (1973) 32 Cal.App.3d 795, 810.)

55. Second, CEQA directs public agencies to avoid or reduce environmental damage whenever feasible by requiring changes in projects through the use of alternatives or mitigation measures. (See CEQA Guidelines, § 15002(a)(2) and (3); see also *Citizens of Goleta Valley v. Board of Supervisors* (1990) 52 Cal.3d 553, 564; *Laurel Heights Improvement Ass'n v. Regents of the University of California* (1988) 47 Cal.3d 376, 400.) Consequently, an EIR must identify feasible mitigation measures and alternatives in order to substantially lessen or avoid otherwise significant environmental effects. (Pub. Res. Code §§ 21002, 21081(a); CEQA Guidelines, § 15126.4(a).)

FIRST CAUSE OF ACTION
(Violation of CEQA – Failure to Define the Proper Baseline)

56. Petitioners incorporate herein by reference the allegations contained in the foregoing paragraphs.

57. CEQA and its implementing guidelines require that an EIR "include a description of the physical environmental conditions in the vicinity of the project, as they exist at the time the

notice of preparation is published . . . from both a local and regional perspective. This environmental setting will normally constitute the baseline physical conditions by which a lead agency determines whether an impact is significant." (CEQA Guidelines, § 15125(a).)

58. The baseline is the starting point from which to measure whether an impact may be environmentally significant. The baseline must thus accurately depict "real conditions on the ground," not hypothetical or merely allowable conditions. (*Cmtys for a Better Env't v. S. Coast Air Qual. Mgmt. Dist.* (2010) 48 Cal.4th 310, 321 [quoting *Save Our Peninsula Committee v. Monterey Cnty. Bd. of Supervisors* (2001) 87 Cal.App.4th 99, 121].)

59. On September 19, 2013, when the Notice of Preparation was published, the Refinery was not processing crude oil. Accordingly, the EIR should have assumed no refining operations as the baseline.

60. Instead of using the real conditions on the ground at the Refinery, the EIR uses a baseline reflecting 2007 operating conditions, including the Refinery's processing of 60,389 barrels of crude oil per day, to assess the Project's impacts, including the Refinery's air pollutant and greenhouse gas emissions, motor vehicle, truck, and railcar trips, risk of accidental release of hazardous materials, hazardous materials transport, refinery water demand, wastewater generation, traffic impacts, utilities consumption, pipeline throughput, and cumulative impacts.

61. Because the processing of crude oil in the Refinery has not occurred for years, there is no basis to use continuing crude refinery operations as the Project's baseline. Such a baseline constitutes an improper and unrealistic baseline that does not "give the public and decision makers the most accurate picture practically possible of the project's likely impacts." (See *Neighbors for Smart Rail v. Exposition Metro Line Const. Auth*. (2013) 57 Cal.4th 439, 449.)

62. By certifying an EIR without an accurate baseline, Kern County committed a prejudicial abuse of discretion, failed to proceed in the manner required by law, and acted without substantial evidentiary support. Consequently, Kern County's findings that the Project's impacts are less than significant lack evidentiary support.

SECOND CAUSE OF ACTION
(Violation of CEQA - Inaccurate Project Description)

63. Petitioners incorporate herein by reference the allegations contained in the foregoing paragraphs.

64. CEQA requires that the EIR include an accurate project description, and that the nature and objective of a project be fully disclosed and fairly evaluated in the EIR. "'An accurate, stable and finite project description is the *sine qua non* of an informative and legally adequate EIR.' However, 'a curtailed, enigmatic or unstable project description draws a red herring across the path of public input.'" (*San Joaquin Raptor Rescue Ctr. v. Cnty. of Merced* (2007) 149 Cal.App.4th 646, 655 [quoting *Cnty. of Inyo v. City of L.A.* (1977) 71 Cal.App.3d 185, 199, 197-98].)

65. With respect to a refinery project that would result in changing the refinery's feedstock or crude slate, an EIR must "adequately address the issue of whether the Project includes any equipment changes that would facilitate the future processing of [more polluting] crudes at the Refinery." (*Cmtys for a Better Env't v. City of Richmond* (2010) 184 Cal.App.4th 70, 83 [emphasis added, internal alterations and quotation marks omitted].) In addressing this issue, the EIR must provide an "*objective quantification* of the continuing mix that the Refinery [project] was designed to process" and how that mix compares to "the mix the Refinery is currently processing." (*Id.* at 85 [emphasis added].)

66. The EIR fails to provide an accurate project description, For example:

a. The EIR states that the Project's purpose is "to allow greater flexibility for the existing refinery to process a variety of crude oils on-site." In response to comments, it admits that the Project has the "potential to import and process Bakken and tar sands crude oils, as well as other North American crude oils." The EIR, however, fails to provide an "objective quantification" of the types and mix of crude oils that will foreseeably be processed at the Refinery, thus precluding full disclosure of the Project's impacts. This information is critical, because depending on the type of crude oil processed, the Project's impacts on air quality and safety hazards could differ substantially. *See* ¶¶ 37-39 above. As a result, the EIR fails to adequately disclose and analyze the Project's impacts, in violation of CEQA.

b. The EIR fails to disclose that the Project entails restarting the Refinery and misleadingly states that "[r]esuming refining is independent of the proposed project and . . . not caused by the project," even though it is a necessary step for refinery operations. As a result, the EIR omits critical information concerning the significant impacts of restarting the Refinery, including increased flaring emissions and safety hazards that could arise from restarting mothballed equipment.

c. The EIR's project description improperly fails to describe the entire mainline routes for crude-by-rail transport and the full distance that trains will travel, by excluding those routes outside Kern County or California. Consequently, the EIR fails to adequately study the Project's various significant air quality, greenhouse gas, hazardous material release, biological resource, and water quality impacts resulting from mainline activities.

67. By certifying an EIR without a complete and accurate project description, Kern County committed a prejudicial abuse of discretion, failed to proceed in the manner required by law, and acted without substantial evidentiary support. Thus, Kern County's findings that the Project does not have significant air quality, water quality, greenhouse gas, biological resource, cumulative impacts, and hazardous material release and other safety hazard risks lack evidentiary support.

THIRD CAUSE OF ACTION
(Violation of CEQA – Failure to adequately disclose and evaluate the Project's significant environmental effects)

68. Petitioners incorporate herein by reference the allegations contained in the foregoing paragraphs.

69. CEQA requires that an EIR describe the proposed project's significant environmental effects; each such effect must be revealed and fully analyzed in the EIR. (Pub. Res. Code § 21100(b), 21002.1; CEQA Guidelines, § 15126.2(a).) Significant effect on the environment refers to substantial, or potentially substantial, adverse changes in physical conditions. (Pub. Res. Code §§ 21068, 21060.5; see also Pub. Res. Code § 21100(d).)

70. The CEQA Guidelines further require that in discussing the environmental effects of a project, an EIR should contain "a sufficient degree of analysis to provide decisionmakers with information which enables them to make a decision which intelligently takes account of environmental consequences." (CEQA Guidelines, § 15151.)

71. An EIR should include "a good faith effort at full disclosure." (*Ibid.*) "[W]here comments from responsible experts or sister agencies disclose new or conflicting data or opinions that cause concern that the agency may not have fully evaluated the project and its alternatives, these comments may not simply be ignored. *There must be good faith, reasoned analysis in response*." (*Cleary v. County of Stanislaus* (1981) 118 Cal.App.3d 348, 357 [italics in original]).

72. The EIR fails to adequately evaluate and adequately respond to public comments concerning a variety of significant environmental effects of the Project, including the Project's direct, indirect, and cumulative impacts. For example:

a. The EIR fails to adequately evaluate the impacts of processing Bakken crudes by (1) modeling VOC and toxic air contaminant emissions on "Lost Hills" crude, a crude with substantially lower VOC and toxic air contaminant emissions than Bakken crude; and (2) failing to take into account Bakken crude's unique properties in analyzing the Refinery's risk of a hazardous material release.

b. Despite the admission that the Project has the potential to import and process tar sands crudes, the EIR fails to evaluate the impacts of processing these crudes, which pose unique air quality and public health risks compared to other heavy crudes.

c. The EIR improperly claims that credits previously earned for reducing emissions "offset" the Project's significant VOC emissions, rendering them insignificant.

d. The EIR severely underestimates the significance of the Project's air emissions by failing to disclose and analyze the impacts of flaring events at

the Refinery, including increased flaring emissions that would result from restarting the Refinery.

e. The EIR fails to adequately disclose and evaluate greenhouse gas emissions:

(1) Rather than comparing the Project's emissions to the Refinery's actual current emissions, the EIR compares them to a hypothetical "business as usual" baseline; assumes without evidentiary support that the Project will achieve at least a 29 percent reduction in these hypothetical emissions in accordance with state greenhouse gas reduction goals; and improperly concludes that this reduction will render the greenhouse gas emissions less than significant.

(2) The EIR improperly credits to the Project greenhouse gas reductions resulting from (a) the federal renewable fuels standard and (b) displacement of truck traffic from the San Francisco Bay Area due to a purported increase in pipeline activities contemplated by the Project.

(3) The EIR improperly omits analysis of greenhouse gas emissions that would result from mainline rail transport, the refining of crudes shipped by the Project to other refineries, and combustion of the end product, thereby grossly underestimating the Project's total greenhouse gas emissions.

f. The EIR improperly excludes the study of the impacts of mainline rail operations, including on air pollution, greenhouse gas emissions, wildlife, public safety, and the Project's cumulative impacts, because it erroneously concludes that review of these impacts is preempted by the Interstate Commerce Commission Termination Act.

g. The EIR underestimates the risk of a rail accident involving a hazardous material release by (1) grossly inflating the denominator by which this risk is calculated; (2) failing to analyze the risk along the entire transport route; and

(3) failing to take into account the unique properties of Bakken crude that would increase the risk of a hazardous material release.

h. The EIR's flawed analysis of the Project's significant impacts led to an improper analysis of the Project's cumulative impacts.

73. By certifying an EIR that fails to fully analyze the Project's significant environmental impacts, Kern County committed a prejudicial abuse of discretion, failed to proceed in the manner required by law, and acted without substantial evidentiary support. Thus, Kern County's findings that the Project will not have significant environmental impacts lack evidentiary support.

FOURTH CAUSE OF ACTION
(Violation of CEQA – Failure to Provide Information upon Which Conclusions Are Based)

74. Petitioners incorporate herein by reference the allegations contained in the foregoing paragraphs.

75. CEQA requires that an EIR provide an "analytically complete and coherent explanation" of its conclusions. (See *Vineyard Area Citizens for Responsible Growth v. City of Rancho Cordova* (2007) 40 Cal.4th 412, 439-40.) "The data in an EIR must not only be sufficient in quantity, it must be presented in a manner calculated to adequately inform the public and decision makers, who may not be previously familiar with the details of the project." (*Id*. at 442.) Moreover, an EIR that purports to rely upon a future analysis or that does not properly incorporate or reference a separately performed analysis does not adequately inform the public. (*Id*. at 440-41, 443; see also CEQA Guidelines, § 15151 [providing that an EIR should contain "a sufficient degree of analysis to provide decisionmakers with information which enables them to make a decision which intelligently takes account of environmental consequences"].)

76. The EIR for the Project fails to properly inform the public and decision-makers of the basis for its conclusions. These failures include, but are not limited to, the following:

a. The EIR's conclusion that VOC emissions would not be significant because previously earned emissions reduction credits would offset them lacks any factual support. The EIR does not disclose the dates the emission reduction

credits were created, the location of the reductions, the type of source, and how these past reductions will counteract the Project's future VOC emissions.

b. The EIR's conclusion that greenhouse gas emissions will not be significant because they will be reduced or offset lacks any evidentiary support. The EIR fails to specifically identify the expected on-site and off-site measures to be implemented and the expected reductions from each, or, with respect to the purchase of offset credits, the specific source of the credits and their reliability. The EIR also fails to impose enforceable requirements for the Project's claimed reductions.

c. The EIR's conclusion that the transport and processing of Bakken crude does not pose any greater air pollution impacts or hazardous material release risks compared to other crudes lacks any basis in fact.

77. By certifying an EIR that does not provide the information upon which its conclusions are based, Kern County committed a prejudicial abuse of discretion and failed to proceed in the manner required by law. Consequently, Kern County's findings that the Project will not have significant environmental impacts lack evidentiary support.

FIFTH CAUSE OF ACTION
(Violation of CEQA – Failure to Consider, Discuss, and Adopt Mitigation Measures to Minimize Significant Environmental Impacts)

78. Petitioners incorporate herein by reference the allegations contained in the foregoing paragraphs.

79. Identification and discussion of proposed and alternative mitigation measures is a core requirement of CEQA. A basic purpose of CEQA is to "[p]revent significant, avoidable damage to the environment by requiring changes in projects through the use of alternatives or mitigation measures." (CEQA Guidelines, § 15002(a)(3). See also CEQA Guidelines, § 15021(a)(1).) Government agencies "shall mitigate or avoid the significant effects on the environment." (Pub. Res. Code § 21002.1(b).)

80. "Formulation of mitigation measures should not be deferred until some future time." (CEQA Guidelines, § 15126.4(a)(1)(B).) "An EIR is inadequate if "[t]he success or failure of

mitigation efforts . . . may largely depend upon management plans that have not yet been formulated, and have not been subject to analysis and review within the EIR.*"* (*Cmtys for a Better Env't*, 184 Cal.App.4th at 92 [quoting *San Joaquin Raptor*, 149 Cal.App.4th at 655-56].) "[V]aguely described . . . mitigation measures" that are "nonexclusive, undefined, untested and of unknown efficacy" must be rejected. (*Id.* at 93.)

81. Mitigation measures may not be included as a project component. (*Lotus v. Dep't of Transp.* (2014) 223 Cal.App.4th 645.) Rather, the project must "separately identify and analyze the significance of the impacts [of the project] before proposing mitigation measures." (*Id.* at 658.) Failure to treat mitigation measures separate from project components "precludes both identification of potential environmental consequences arising from the project and also thoughtful analysis of the sufficiency of measures to mitigate those consequences." (*Ibid.*)

82. The EIR's treatment of mitigation measures is riddled with flaws. For example:

a. The EIR improperly relies on unidentified emissions reduction credits to claim that the Project's VOC emissions would be less than significant, thereby failing to require feasible mitigation measures such as the use of zero-leak fugitive components and geodesic domes on floating roof tanks.

b. The EIR improperly treated future greenhouse gas reductions required under California's AB 32 as a project component, and erroneously concluded that with these reductions, the Project would not have significant greenhouse gas impacts requiring mitigation. Instead, the EIR should have evaluated the significance of the greenhouse gas emissions and proposed any greenhouse gas emission reductions as mitigation measures. When viewed as mitigation measures, the greenhouse gas reductions required under AB 32 are inadequate. First, mitigation measures must be "additional" to existing regulatory requirements like AB 32. Second, the cap-and-trade pollution permits allocated by AB 32 are not the same as mitigation measures, because they do not necessarily represent actual reductions or offsets. Moreover, even if they did, these reductions would not occur beyond 2020, when AB 32 is due

to expire. Finally, even if reliance on AB 32 measures to mitigate greenhouse gas emissions was proper, the EIR fails to disclose the specifics on how these mitigation measures will occur, will be monitored, and will be enforced.

c. The EIR fails to include enforceable, specific measures to reduce the Project's hazardous material release risks. Instead, it improperly speculates that federal and state agencies will eventually strengthen rail safety regulations and relies on vague, unenforceable, and unsupported statements by BNSF to claim that any rail transport risks will be adequately reduced.

d. The EIR identifies rail transport impacts on biological resources to be significant but unavoidable, on the basis that Kern County lacks authority to regulate mainline rail activities. The EIR, however, fails to consider whether measures which would not involve direct regulation of mainline activities would be feasible, including the creation of wildlife crossings or conservation funds to improve habitat quality for sensitive and special status species.

83. By certifying the EIR without mitigating the Project's significant environmental impacts, Kern County committed a prejudicial abuse of discretion, failed to proceed in the manner required by law, and acted without substantial evidentiary support.

PRAYER FOR RELIEF

WHEREFORE, Petitioners pray for judgment as set forth below:

A. For a writ of mandate or peremptory writ issued under the seal of this Court and directing the Kern County Board of Supervisors and Kern County Planning and Community Development Department to:

1. Void the EIR for the Alon Bakersfield Refinery Crude Flexibility Project;

2. Set aside and withdraw approvals of the Project; and

3. Refrain from granting any further approvals for the Project unless and until the Kern County Board of Supervisors and Kern County Planning and Community Development Department comply fully with the requirements of CEQA.

B. For entry of preliminary and/or permanent injunctive relief prohibiting the Kern

County Board of Supervisors, Kern County Planning and Community Development Department, Alon U.S.A, and Paramount Petroleum from carrying out, implementing, or otherwise acting in furtherance of any of the changes and expansions to operations at Alon Bakersfield Refinery authorized by the Modification of Precise Development Plans until a lawful approval has been obtained from the Kern County Board of Supervisors, and after the requirements of CEQA have been fulfilled.

C. For a declaratory judgment stating that the Kern County Board of Supervisors and Kern County Planning and Community Development Department violated CEQA in approving the Alon Bakersfield Refinery Crude Flexibility Project.

D. For a declaratory judgment that the Kern County Board of Supervisors and Kern County Planning and Community Development Department's failure to prepare, consider, and approve or certify an adequate environmental analysis under CEQA is a prejudicial abuse of discretion.

E. For Petitioners' fees and costs, including reasonable attorneys' fees and expert witness costs, as authorized by CCP § 1021.5 and any other applicable provisions of law.

F. For such other legal and equitable relief as this Court deems appropriate and just.

DATED: October 9, 2014

Respectfully submitted,

Stacey P. Geis (CABN 181444)
Wendy S. Park (CABN 237331)
Elizabeth B. Forsyth (CABN 288311)
EARTHJUSTICE
50 California Street Ste. 500
San Francisco, CA 94111
Tel: 415-217-2000
Fax: 415-217-2040
Email: wpark@earthjustice.org, eforsyth@earthjustice.org, sgeis@earthjustice.org

Attorneys for Petitioners

VERIFICATION

I, Tom Frantz declare:

I am the President of Petitioner Association of Irritated Residents. I have read the above petition for writ of mandate against the Kern County Board of Supervisors, the Kern County Planning and Community Development Department, Paramount Petroleum Corporation, and Alon, U.S.A., and know its contents. All of the facts alleged in the petition not otherwise supported by citations to the record, exhibits, or other documents are true of my own personal knowledge.

I declare under penalty of perjury that the foregoing is true and correct. Executed October 3, 2014 in Bakersfield, California.

Tom Frantz
President
Association of Irritated Residents

VERIFICATION

I, Kassia Siegel declare:

I am the Director of the Climate Law Institute of Petitioner Center for Biological Diversity. I have read the above petition for writ of mandate against the Kern County Board of Supervisors, the Kern County Planning and Community Development Department, Paramount Petroleum Corporation, and Alon, U.S.A., and know its contents. All of the facts alleged in the petition not otherwise supported by citations to the record, exhibits, or other documents are true of my own personal knowledge.

I declare under penalty of perjury that the foregoing is true and correct. Executed October 8th, 2014 in Joshua Tree, California.

Kassia Siegel
Director of the Climate Law Institute
Center for Biological Diversity

VERIFICATION

I, Gordon Nipp, declare:

I am the Vice-Chair of the Kern-Kaweah Chapter of Petitioner Sierra Club. I have read the above petition for writ of mandate against the Kern County Board of Supervisors, the Kern County Planning and Community Development Department, Paramount Petroleum Corporation, and Alon, U.S.A., and know its contents. All of the facts alleged in the petition not otherwise supported by citations to the record, exhibits, or other documents are true of my own personal knowledge.

I declare under penalty of perjury that the foregoing is true and correct. Executed October 8, 2014 in Bakersfield, California.

Gordon L. Nipp

Gordon Nipp
Vice-Chair of the Kern-Kaweah Chapter
of Sierra Club

EXHIBIT 5

November 19, 2014

Via Email

Arnaud Marjollet
Director of Permit Services
San Joaquin Valley APCD
34946 Flyover Court
Bakersfield, CA 93308

Dear Mr. Marjollet:

I am writing to submit comments on the San Joaquin Valley Air Pollution Control District's ("District") proposed Authority to Construct for the Alon Bakersfield Crude Flexibility Project ("Project") proposed by Paramount Petroleum Corporation and its parent Alon U.S.A. Energy Inc. (collectively, "Alon"). These comments are submitted on behalf of Association of Irritated Residents, Center for Biological Diversity, and Sierra Club. The organizations represent thousands of members and supporters in California and the San Joaquin Valley ("Valley") who are deeply concerned about skyrocketing crude-by-rail imports from the mid-continent into the state. As a result of this project, millions of barrels of volatile Bakken crude oils will be hauled through California's most sensitive areas and treacherous passages, ultimately ending up in our most pollution-burdened communities, including the Valley, for intensive refining.

The Project entails a five-fold increase in the Alon Bakersfield Refinery's ("Refinery") capacity to import crude oil from 40 tank cars per day to 208 tank cars per day, or up to 63.1 million barrels of crude per year (over 173,000 barrels per day). This influx of cheap, mid-continent crudes, including Bakken crude from North Dakota, will allow the shuttered Refinery to reopen and run at full capacity, processing 70,000 barrels of crude oil per day. Restarting the Refinery – which has been mostly idle since 2008 – will significantly increase harmful air pollution that will only exacerbate the poor air quality and respiratory illnesses that plague San Joaquin Valley communities already unfairly burdened with industrial pollution. Further, the massive ramp-up in crude imports will significantly increase greenhouse gas emissions and the risk of catastrophic accidents and oil spills along the rail transport route.

Unfortunately, the District's preliminary decision on the Authority to Construct does not meet New Source Review requirements under District Rule 2201. It fails to consider and apply Best Available Control Technology ("BACT") to the Project's new emissions units or those units undergoing major modifications, including new and modified floating roof tanks, new boilers, and new pumps and compressors. These units are expected to emit significant levels of oxides of nitrogen ("NOx") and volatile organic compounds ("VOC"), which result in the formation of ozone, for which the Valley is already in "extreme" nonattainment. Given existing unhealthy air quality that already exacts an enormous toll on Valley residents in the form of chronic respiratory illnesses, emergency room visits, premature death, missed school days, medical bills,

lost wages, and reduced worker productivity, the application of BACT to these new and modified units is imperative.

The emissions offsets analysis for the proposed Authority to Construct must also be revised to comply with Rule 2201. The analysis fails to properly calculate the emissions increase that must be offset because it erroneously relies on a 2008 baseline that does not represent normal non-operational conditions at the Refinery. In addition, it severely underestimates the Project's VOC emissions, by relying on flawed assumptions about the crude oils that will be stored and processed at the Refinery. The analysis also improperly exempts from emissions offset requirements existing heaters that will be retrofitted and relies on invalid emissions reduction credits ("ERCs") for all other emissions increases. The failure to properly offset the Project's emissions increases will only result in further deterioration of the Valley's air and put attainment of air quality standards further out of reach.

In sum, the District must correct the Project's BACT and emissions offset analyses and revise the proposed Authority to Construct in accordance with our comments below.

I. The Authority to Construct Fails to Apply BACT.

The proposed Authority to Construct fails to apply BACT to new floating roof tanks, boilers, and compressors and pumps, despite the District's determination that BACT is triggered for each of these units. BACT is "the most stringent emission limitation or control technique of the following": "[a]chieved in practice for such category and class of source;" "[c]ontained in any State Implementation Plan approved by the Environmental Protection Agency for such category and class of source"; "[c]ontained in an applicable federal New Source Performance Standard"; or "[a]ny other emission limitation or control technique, including process and equipment changes of basic or control equipment, found by the APCO to be cost effective and technologically feasible for such class or category of sources or for a specific source." Rule 2201, section 3.10. Generally, BACT is required for new or modified emissions units that result in emissions exceeding certain thresholds. *See generally* Rule 2201, section 4.0.

A. Stricter Volatile Organic Compound Control Systems and Geodesic Domes Must Be Applied to the Floating Roof Tanks.

The Authority to Construct does not apply BACT on floating roof tanks that store volatile substances, such as Bakken crude. The new tanks' VOC emissions will be subject to "95% control of VOC emissions, through use of primary metal shoe seal with secondary wiper, or equivalent." Authority to Construct Application Review, Crude Oil Flexibility Project ("Application Review"), p. 38. The Bay Area Air Quality Management District ("BAAQMD"), however, has determined that a "[v]apor recovery system w/ an overall system efficiency > ***98%***" is "technologically feasible" and "cost effective."[1] (emphasis added). The District must revise the

[1] The BAAQMD BACT Guidelines are available at http://hank.baaqmd.gov/pmt/bactworkbook/. Relevant portions are attached as Exhibit A.

top-down BACT analysis taking into account the availability of control systems that are 98%-efficient.

The Authority to Construct also fails to require geodesic domes to reduce VOC emissions from floating roof tanks. These domes on floating roof tanks are feasible, satisfy best available control technology, and are widely used. The BAAQMD BACT Guidelines specify that "a dome is required for tanks that meet all of the following: 1) capacity greater than or equal to 19,815 gallons [approximately 629 barrels] 2) located at a facility with greater than 20 tpy VOC emissions since the year 2000 and 3) storing a material with a vapor pressure equal to or greater than 3 psia (except for crude oil tanks that are permitted to contain more than 97% by volume crude oil)." Ex. A. The 250,000-barrel external floating roof tanks are 397 times the volume of the BAAQMD threshold and will certainly exceed a vapor pressure of 3psia when storing light crude oils, such as Bakken, Eagle Ford, and Permian Basin crude oils.

Over 10,000 aluminum domes have been installed on petrochemical storage tanks in the United States.[2] For example, at the ExxonMobil Torrance Refinery, the refinery

> completed the process of covering all floating roof tanks with geodesic domes to reduce volatile organic compound (VOCs) emissions from facility storage tanks in 2008. By installing domes on our storage tanks, we've reduced our VOC emissions from these tanks by 80 percent. These domes, installed on tanks that are used to store gasoline and other similar petroleum-derived materials, help reduce VOC emissions by blocking much of the wind that constantly flows across the tank roofs, thus decreasing evaporation from these tanks.[3]

A similar project to increase crude storage capacity, recently proposed at the Phillips 66 Los Angeles Carson Refinery, required external floating roof tanks with geodesic domes to store crude oil with an RVP of 11.[4] The Negative Declaration for this project assumed these tanks would store crude oil with a TVP <11 psi.[5] The RVP would be even higher. The ConocoPhillips

---

[2] M. Doxey and M. Trinidad, Aluminum Geodesic Dome Roof for Both New and Tank Retrofit Projects, Materials Forum, v. 30, 2006, available at: http://www.materialsaustralia.com.au/lib/pdf/Mats.%20Forum%20page%20164_169.pdf (Exhibit B).

[3] Torrance Refinery: An Overview of our Environmental and Social Programs, 2010, available at: http://www.exxonmobil.com/NA-English/Files/About_Where_Ref_TorranceReport.pdf (Exhibit C).

[4] See, e.g., Phillips 66 Los Angeles Refinery Carson Plant – Crude Oil Storage Capacity Project, September 6, 2013, Table 1-1, Draft Negative Declaration, available at http://www.aqmd.gov/docs/default-source/ceqa/documents/permit-projects/2014/draftnd-p66storage.pdf (Exhibit D).

[5] *Ibid*.

Wilmington Refinery added a geodesic dome to an existing oil storage tank to satisfy BACT.[6] Similarly, Chevron proposed[7] to use domes on several existing tanks to mitigate VOC emission increases at its Richmond Refinery.[8] The U.S. Department of Justice CITGO Consent Decree required a geodesic dome on a gasoline storage tank at the Lamont, Texas refinery.[9] Further, numerous vendors have provided geodesic domes for refinery tanks.[10]

These numerous applications of geodesic domes to control VOC emissions from refinery storage tanks satisfy the "achieved in practice" test for BACT. Thus, geodesic domes must be required to satisfy BACT for the new and modified storage tanks under SJVAPCD Rule 2201.

Finally, because VOC emissions have been severely underestimated, *see* section III below, the potential amount of emissions to be reduced by the above VOC-controls is much greater than what the District's initial emissions estimates might indicate. A revised BACT analysis must rely on corrected VOC-emissions figures to provide an accurate assessment of the cost-effectiveness of these emissions controls.

B. The BACT Analysis for the New Boilers Is Incomplete.

The BACT analysis for the three new boilers is flawed, failing to demonstrate that NOx, carbon monoxide ("CO"), and hydrogen sulfide emissions will be reduced to the extent feasible.

---

[6] SCAQMD Letter to G. Rios, December 4, 2009, available at: http://yosemite.epa.gov/r9/air/epss.nsf/e0c49a10c792e06f8825657e007654a3/e97e6a905737c9bd882576cd0064b56a/$FILE/ATTTOA6X.pdf/ID%20800363%20ConocoPhillips%20Wilmington%20-%20EPA%20Cover%20Letter%20%20-AN%20501727%20501735%20457557.pdf (Exhibit E).

[7] City of Richmond, Chevron Refinery Modernization Project, Environmental Impact Report, Volume 1: Draft EIR, March 2014 (Chevron DEIR), available at: http://chevronmodernization.com/project-documents/.

[8] Chevron DEIR, Chapter 4.3, available at: http://chevronmodernization.com/wp-content/uploads/2014/03/4.3_Air-Quality.pdf (Exhibit F).

[9] CITGO Petroleum Corp. Clean Air Act Settlement, available at: http://www2.epa.gov/enforcement/citgo-petroleum-corporation-clean-air-act-settlement (Exhibit G).

[10] See, e.g., Aluminum Geodesic Dome, available at: http://tankaluminumcover.com/Aluminum-Geodesic-Dome; Larco Storage Tank Equipments, available at: http://www.larco.fr/aluminum_domes.html; Vacono Dome, available at: http://www.easyfairs.com/uploads/tx_ef/VACONODOME_2014.pdf; Peksay Ltd., available at: http://www.peksay.info/oil_terminals/geodesic_domes.htm; United Industries Group, Inc., available at: http://www.thomasnet.com/productsearch/item/10039789-13068-1008-1008/united-industries-group-inc/geodesic-aluminum-dome-roofs/ (Exhibit H).

1. NOx Selective Catalytic Reduction

With respect to the boilers' NOx emissions, the District's Application Review concludes that 6 ppmv at 3% O2 using low-NOx burners is BACT. The top-down BACT analysis, however, rules out the application of selective catalytic reduction ("SCR") (which would achieve 5 ppmv NOx at 3% O2), because the cost of reducing emissions using this technology does not meet the District's cost-effectiveness threshold of $24,500 per ton. Application Review, PDF 478-79. The District's calculations show that the cost-effectiveness is only $58,198 per ton. *Ibid.* These calculations, however, do not explain or justify the underlying assumptions, precluding a meaningful assessment of the cost-effectiveness analysis. For example, the calculations state that an equipment life of 10 years is assumed. But in Alon's original application and BACT analysis for the project, Alon assumed a 20-year equipment life. *See* Ex. J. Indeed, the "capital recovery factor"($i[1+i]^n/[1+i]^n-1$) used in Alon's analysis is much lower (0.0944) than the one used by the District (0.1627). EPA's Air Pollution Control Cost Manual also provides an example calculation of SCR cost-effectiveness using a 20-year equipment life and 7% interest rate, resulting in a cost recovery factor of 0.0944.[11] Using this lower capital recovery factor in the District's calculations results in a much more cost-effective emissions reduction of $33,757.44 per ton. However, as explained further below, the 7% interest rate is outdated and a 20-year lifetime is not realistic.

In a March 2014 presentation by the South Coast Air Quality Management District ("SCAQMD") concerning the cost-effectiveness of SCR for refineries, the SCAQMD's analysis (using the same levelized cash flow method used by the District) assumed a 4% interest rate and 25-year life of the equipment.[12] These assumptions are more realistic than Alon's or the District's. Alon's financial reports indicate that it is capable of securing capital at an interest rate lower than 4%.[13] And as explained by refinery expert Dr. Phyllis Fox in comments on a cost-effectiveness analysis of SCR in a similar context, "[f]or these types of analyses, the Office of Management and Budget ("OMB") directs that a real interest rate be used [i.e., adjusted to

---

[11] EPA Pollution Control Cost Manual, Sixth Edition (January 2002), available at http://www.epa.gov/ttncatc1/dir1/c_allchs.pdf (Exhibit K).

[12] *See* NOx RECLAIM Working Group Meeting, March 18, 2014, p. 13, available at http://www.aqmd.gov/docs/default-source/rule-book/Proposed-Rules/regxx/reclaimwgm031814.pdf?sfvrsn=2 (Exhibit L).

[13] *See* Alon U.S.A. Energy, Inc., Form 10-K for Fiscal Year 2013, March 2014, PDF 79, 92 available at http://www.sec.gov/Archives/edgar/data/1325955/000132595514000013/alj-20131231x10k.htm (Exhibit M); Alon U.S.A. Energy, Inc., Form 10-Q, 9/30/2014, available at http://quote.morningstar.com/stock-filing/Quarterly-Report/2014/9/30/t.aspx?t=XNYS:ALJ&ft=10-Q&d=acdd8e2f9a21686b6e4d53b46613845b, p. 10 (noting interest rate swap agreements resulting in average fixed interest rate of 0.25% in 2014; 0.60% in 2015; 1.47% in 2016; 2.35% in 2017; 3.09% in 2018 and 3.28% thereafter); *id.*, p. 16 (noting recent loan agreement at annual rate of LIBOR plus 3.75% margin) (Exhibit N [PDF 18, 30]).

remove the effects of inflation and to reflect the real costs of funds to the borrower]. When the [EPA] Cost Control Manual was developed, the real interest rate was 7%. However, the latest real interest rate for cost-effectiveness analyses published by OMB is 1.9% for a 30-year period."[14] Thus, even a 4% interest rate is highly conservative.

With respect to the equipment lifetime, ample evidence indicates that SCR typically has a lifetime of 30 years or more. A study of the economic risks from SCR operation at the Detroit Edison Monroe power plant, for example, used 30 years as the anticipated lifetime.[15] Further, in EPA's response to comments on the approval of a final rule determining that SCR was the "best available retrofit technology" and "most cost-effective" technology for the San Juan Generating Station, a coal-fired power plant in New Mexico, EPA justified a 30-year lifetime of the SCR assumed in its cost-effective analysis:

> The lifetime of an SCR, which is a metal frame packed with catalyst modules, is equal to the lifetime of the boiler, which might easily be over 60 years. *The lifetime of a retrofit SCR is generally set equal to the remaining useful life of the facility.* The record is silent on the remaining useful life of the [San Jaun Generating Station] units. Further, USGS studies of the coal reserves upon which the [San Juan Generating Station] relies indicate that the local coal supply is adequate to support a remaining useful life of 30 years. Many utilities routinely specify 30+ year lifetimes in requests for proposal and to evaluate proposals. In fact, an analysis prepared by [Black & Veatch] for another facility assumed a 40 year SCR lifetime. And finally, Sargent & Lundy assumed a design life of 30 years for the nearby Navajo Generating Station which burns a similar coal. We conclude there is nothing in the record to support a 20 year lifetime for the SCR and believe a 30 year lifetime is justified.[16]

---

[14] Fox, Phyllis, Report on Hydrogen Cyanide Emissions From Fluid Catalytic Cracking Units (October 28, 2014), pp. 23-24 (Exhibit O), citing OMB Circular No. A-94, Appendix C, Revised February 7, 2014, available at: http://www.whitehouse.gov/sites/default/files/omb/memoranda/2014/m-14-05.pdf (Exhibit P). Dr. Fox's resume is attached as Exhibit Q.

[15] S.D. Unwin and others, Selective Catalytic Reduction (SCR) System Design and Operations: Quantitative Risk Analysis of Options, Presented at CCPS 17th Annual International Conference: Risk, Reliability, and Security, p. 3, available at: http://www.unwin-co.com/files%5CSCR-Risk-Paper,CCPS-RRS2002.pdf (Exhibit R).

[16] "Approval and Promulgation of Implementation Plans; New Mexico; Federal Implementation Plan for Interstate Transport of Pollution Affecting Visibility and Best Available Retrofit Technology Determination; Final Rule," 76 Fed. Reg. 52388, 52402 (Aug. 22, 2011), available at http://www.gpo.gov/fdsys/pkg/FR-2011-08-22/pdf/2011-20682.pdf (Exhibit S).

Here, the expected life of the project is 30 years.[17] It is therefore reasonable to assume that the remaining useful life of the facility and of the SCR equipment is at least 30 years.[18]

Using the more realistic assumptions of a 30-year equipment life and a 1.9% real interest rate results in a capital recovery ratio of 0.044 and a cost-effectiveness of $15,748.11 per ton, which meets the District's cost-effectiveness threshold. Even the more conservative assumptions of a 4% interest rate and 25-year lifetime results in a capital recovery ratio of 0.064 and a cost-effectiveness of $22,890.68 per ton, which also meets the District's cost-effectiveness threshold. In light of the above evidence showing that the District's cost figures are inflated, the Air District must reevaluate and revise its BACT analysis using these more realistic assumptions.

2. Low Temperature Oxidation

Low temperature oxidation ("LTO") has achieved emissions controls comparable to that of SCR, but the District's analysis did not consider this technology in its BACT analysis. For example, a 16.4-MMBtu/hr Cleaver Brooks CB700 fire-tube boiler was permitted in February 1992 at 40 ppm NOx at 3% O_2. The boiler was subsequently equipped with LTO in October 1996 as a demonstration project. "The LTO system utilizes ozone to oxidize and control various pollutants, including NOx. The LTO system process includes (1) the recovery of waste heat from the flue gas, (2) the oxidation of NOx and CO, (3) the absorption of higher nitrogen and sulfur oxides formed in a scrubber solution, and (4) removal of ozone slip."[19]

Source tests demonstrated that LTO achieved a NOx limit of 5 ppm at 3% O_2.[20] The SCAQMD's Mobile Source Test Vehicle (MSTV 1) was used to collect and continuously analyze flue gases at the exhaust stack of the LTO system. NOx and CO concentrations were recorded every minute. The analysis of these data shows that NOx concentrations

---

[17] Kern County Draft Environmental Impact Report, Alon Bakersfield Refinery Crude Flexibility Project ("DEIR") (May 2014), pp. 4.5-14, 4.5-15, 4.6-59, available at http://www.co.kern.ca.us/planning/pdfs/eirs/alon_flexibility_project/Alon_DEIR_Vol1.pdf (Exhibit T).

[18] *See also* Ex. O, pp. 22-23 (Fox report noting SCR is typically designed for a lifetime of 30 years and citing papers indicating SCRs that have been operational since as early as 1986); Selective Catalytic Reduction of NOx From Fluid Catalytic Cracking Case Study: BP

Whiting Refinery (April 2002), available at http://www.cormetech.com/brochures/env-03-128%20-%20kunz%200%20Whiting%20Refinery%20FCC.pdf (Exhibit KK [PDF 6, 15, 19]) (indicating SCRs operational since as early as 1986).

[19] South Coast Air Quality Management District, LAER/BACT Determination for Application No. 343185, available at http://www.aqmd.gov/docs/default-source/bact/laer-bact-determinations/other-technologies/laer-bact-determination-259724.pdf?sfvrsn=2 (Exhibit U).

[20] *See* Best Available Control Technology Determination Data Submitted to the California Air Pollution Control Officers Association BACT Clearinghouse, available at http://www.arb.ca.gov/bact/bact1to3.htm (Alta Dena Dairy) (Exhibit V [PDF 23]).

were consistently below 5 ppmvd at 3% O_2,[21] which corresponds to 0.0061 lb/MMBtu.[22] The District's BACT analysis should be revised to take into account the availability of LTO.

3. CO

With respect to CO emissions from boilers, Appendix D contains no top-down BACT analysis showing how the District concluded that an emissions limit of 50 ppmv CO at 3% O2 is BACT. (Application Review p. 38; *see* Appendix D, PDF 477-81). The Air District must revise the analysis to show how this standard was derived.

In addition, lower emission rates are technologically feasible. Oxidation catalysts are used on many combustion sources outside of the refining industry.[23] These catalysts can remove over 90% of the CO and VOCs and represent the top technology for CO and VOC control for refinery heaters and boilers. Assuming uncontrolled CO limits of 10 ppm for large heaters and 50 ppm for small heaters, BACT for CO should be no more than 1 ppmvd (15-minute average) for the large heaters and 5 ppmvd (3-hour average) for the small heaters.

4. Hydrogen Sulfide

Regarding the boilers' sulfur emissions, the District fails to impose any limits on hydrogen sulfide when such controls are feasible. The District's Application Review states that "[n]atural gas with a fuel sulfur content no greater than 5 grains total sulfur/100 scf" constitutes BACT, but makes no mention of a hydrogen sulfide limit. While Alon will meet the total sulfur requirement by firing the new boilers "on PUC regulated natural gas as supplied to them by the utility company," and such gas is limited to a hydrogen-sulfide content of 0.25 grain per 100 standard cubic feet,[24] or 80 ppmv hydrogen sulfide,[25] a lower limit is feasible. The BAAQMD BACT Guidelines have determined that "Natural Gas or Treated Refinery Gas Fuel w/ <.50

---

[21] Ex. U.

[22] NOx emission rate (lb/MMBtu) = [[NOx concentration in exhaust gas (ppmvd) × 10E-6 × NOx molecular weight (lb/lb mole) x F factor in dscf/MMBtu]/[specific molar volume of exhaust gas at standard reference temperature (scf/lb mole)]] × [oxygen correction] = [[5 × 10E-6 × 46.01 x 8710] / 385.3][(20.9% / (20.9% - 3%)] = 0.0061 lb/MMBtu.

[23] BASF, Oxidation Catalysts for Power Generation, available at http://www.catalysts.basf.com/p02/USWeb-Internet/catalysts/en/content/microsites/catalysts/prods-inds/stationary-emissions/catco-pow-gen (Exhibit I).

[24] *See* General Order 58-A titled "Standards For Gas Service In The State of California," title 7(a), (b), available at: http://docs.cpuc.ca.gov/PUBLISHED/GENERAL_ORDER/54827.PDF (Exhibit W).

[25] *See* Santa Barbara County Air Pollution Control District, Frequently Asked Questions, available at: http://www.ourair.org/eng/tech/frequently-asked-questions/ (noting PUC's hydrogen sulfide limit for natural gas is equivalent to 80 ppmv hydrogen sulfide) (Exhibit X).

ppmv Hydrogen Sulfide" is "cost effective" and "technologically feasible." Ex. A. The Authority to Construct must be revised to consider this stricter hydrogen sulfide limit on the new boilers.

C. Stricter Fugitive Emissions Standards for Pumps and Compressors Are Feasible.

For fugitive emissions from pumps and compressors, the District's BACT analysis concludes that a "[l]eak defined as a reading of methane in excess of 500 ppmv above background when measured per EPA Method 21, and an inspection and maintenance program pursuant to District Rule 4455" constitutes BACT. However, this standard does not specify how those emissions will be controlled to ensure leaks do not exceed this limit, and more stringent standards are feasible. Under the BAAQMD BACT Guidelines, a limit of "100 ppm expressed as methane measured using EPA Reference Method" is technologically feasible and cost effective for both compressors and pumps. Ex. A. The District's BACT analysis must be revised to consider this lower fugitive emission standard.

II. The Air District's Calculation of Baseline Emissions Violates District Rule 2201 and Does Not Represent Normal Source Operation

The Air District has chosen the calendar year 2008 as the baseline year for purposes of calculating the project's "increases in stationary source emissions" for emissions offset purposes. *See* Application Review, Appendix F, PDF 491 ("Baseline period taken to be calendar year 2008, in accordance with Rule 2201 section 3.9, as described in the ATC application."). Because this baseline violates District Rule 2201 and does not represent normal source operation, the Air District must revise the Authority to Construct's emissions calculations using a baseline of zero emissions.

In order to determine the refinery's baseline air emissions under the Air District's New and Modified Stationary Source Review Rule, Rule 2201, the Air District has two options applicable here.[26] It may choose either:

> 3.9.1 the two consecutive years of operation immediately prior to the submission date of the Complete Application; or
> 3.9.2 at least two consecutive years within the five years immediately prior to the submission date of the Complete Application if determined by the APCO as more representative of normal source operation. . . .

[26] The other two options under Rule 2201 for calculating the baseline emissions don't apply ("3.9.3 a shorter period of at least one year if the emissions unit has not been in operation for two years and this represents the full operational history of the emissions unit, including any replacement units; or 3.9.4 zero years if an emissions unit has been in operation for less than one year (only for use when calculating AER)."). The emissions units evaluated were either in place for more than one year or newly proposed.

The Authority to Construct application was submitted on October 25, 2013. Thus, under Rule 2201, the Air District could have chosen as the baseline years either (1) October 25, 2011-October 25, 2013; or (2) any two or more consecutive years between October 25, 2008 and October 25, 2013 if the Air District determined these years were more representative or normal source operation. Instead of complying with Rule 2201, however, the Air District erroneously chose the period from January 1, 2008 to December 31, 2008—outside of the timeframe allowed by the rule and shorter than the required period of two consecutive years.

Because no crude refining operations have occurred since December 2008, the Authority to Construct should be revised to reflect a baseline of zero emissions (years 2009-2010) as the most "representative of normal source operation." Conditions at the Refinery have changed dramatically since 2008. Although the plant was designed to refine crude oil, it went into bankruptcy on December 21, 2008 and stopped processing crude and other feedstock; it was still non-operational when purchased by Alon USA in 2010.[27] Following the change in ownership, the plant was refashioned to convert intermediate vacuum gas oil into finished products, rather than process crude oil.[28]

The Refinery only began operating again in this limited capacity in June 2011, after two-and-half years of being shut down.[29] No crude refining operations were resumed.[30] In 2012, gas oil processing operations were "intermittent," only occurring "from June to early November." DEIR, p. 3-19. The average throughput in 2011 and 2012 was only 10,915 and 4,751 bpd, or 15.5% and 6.8% of the Refinery's daily capacity of 70,000 bpd. *Ibid*. Operations were suspended entirely in December 2012.[31] Based on this record, 2008 calendar year operating conditions do not represent the current conditions at the Refinery, and the years the refinery was completely shut down are "more representative of normal source operation." Rule 2201 § 3.9.2.

The Air District has repeatedly recognized that the operation of the refinery more than six years ago is not a representative baseline. On October 14, 2013, the Air District submitted comments on the Notice of Preparation on the DEIR, criticizing Kern County's use of a 2007 baseline as "reflect[ing] the environmental setting in effect 6-7 years ago, which appears to be remote from the conditions in effect at the time the environmental analysis commenced." Ex. CC. Similarly, in response to Alon's request to use years 2007 and 2008 for the purposes of Rule 3170, Chay Thao of the Air District explained in a July 7, 2014 email that:

> [I]n the past, operation of the refinery by the previous owner (Big West) was considerably different than operations under Alon USA. In 2007, the facility was

---

[27] *See* Alon USA, Annual Report (Form 10-K) (March 14, 2013), PDF 47 (Exhibit Y).

[28] *See* Alon USA, Quarterly Report (Form 10-Q) (Aug. 8, 2011), PDF 35 (Exhibit Z).

[29] *See* Alon USA, Quarterly Report (Form 10-Q) (May 9, 2012), PDF 33 (Exhibit AA).

[30] *Ibid*.; DEIR, p. 3-19.

[31] Ex. Y, PDF 103; Alon USA, Form 10-Q (May 5, 2014), PDF 11 (noting Alon's California refineries did not process "crude" in 2013 and first quarter of 2014) (Exhibit BB).

> owned by Big West and was processing heavy crude oil to produce gasoline and diesel. Operations were then suspended in 2008 after Big West's bankruptcy. Alon USA purchased the facility in 2010 and then applied for Authority to Construct (ATC) permits to modify the facility to process gas oil, instead of heavy crude oil. This application included modifications to the catalytic reformer #1, amine/fuel gas unit, hydrocracker, depentanizer, and unloading rack to accommodate processing of shipped in gas oil. Piping modifications and installation of two additional loading bays to the unloading rack were also authorized. Alon then commenced operation in 2011 to process gas oil. Since then the facility has only operated intermittently.
>
> Based on these changes, year 2007 and 2008 are not representative of normal source operation and therefore cannot be used for the Baseline Period[.]

See Ex. DD. As the Air District has repeatedly recognized, 2008 is an inappropriate year for baseline calculations as it does not represent normal operations. The Air District should accordingly revise the Authority to Construct to properly reflect that the refinery ceased operating during the baseline period.

III. The Assumptions Regarding the Project's Crude Slate Are Flawed.

The Application Review lists various assumptions used in its calculations of the Project's emissions, but these assumptions are not consistent with the Project's objective to import and process "cost-advantaged" light Bakken crude oil.[32] The District's analysis and the Authority to Construct must be revised to reflect the emissions that will result from the importation, storage, and processing of this crude oil.

The Application Review states that the "[c]rude oil density" of crude that will be unloaded with the new railcar unloading rack is "0.915 g/mL (per Applicant)," but this figure does not represent the worst case in terms of VOC emissions. Application Review at 19*; see also id*. ("All liquids transferred will be conservatively assumed to be light crude oil….").[33] This crude oil density is within the range of heavy crude oil, not light crude oil, which will most likely

---

[32] Kern County Final EIR for the Alon Bakersfield Refinery Crude Flexibility Project, vol. 3, Attachment F, PDF 553, available at http://www.co.kern.ca.us/planning/pdfs/eirs/alon_flexibility_project/Alon_FEIR_Ch7_RTC.pdf (Exhibit EE) ("The Bakken Region will be the most likely source for crude to be transported to the proposed crude oil rail terminal to be located at the Bakersfield Refinery."); see also id., Attachment E, PDF 489, 528 (discussing Refinery's shift to lighter Bakken crudes); *id*. PDF 519-20 (noting Bakken crude's lower cost making it more attractive to process).

[33] The Application Review fails to note the temperature at which this density occurs. Since density is a function of temperature, it is unclear as to what type of crude oil is actually assumed in the District's analysis.

be unloaded and processed at the Refinery. According to the Transportation Safety Board of Canada's study of crude oil samples taken from the oil train that derailed in Lac-Mégantic, Quebec, Bakken crude can have a density as low as .8165 g/mL.[34] The National Energy Board of Canada defines light crude oil as having a density equal to, or less than, 875.7 kg/m^3 (or .8757 g/mL) while heavy crude oil is defined as having a density greater than this threshold.[35]

In addition, while the Application Review notes that the Reid Vapor Pressure of the crude oil that will be stored in floating roof tanks is assumed to be 9 psia, this figure is not representative of the vapor pressure of Bakken crude oils, which is more volatile than other light crudes, as explained in the attached report by Dr. Phyllis Fox commenting on the final EIR for the Project. *See* Ex. GG at pp. 4-10 and accompanying references to the comment letter. As Dr. Fox explains, Bakken crude oils typically have a higher Reid vapor pressure than other light crude oils, including a Reid Vapor Pressure of up to 15.5 psia, which results in significantly higher emissions of VOCs and toxic air contaminants ("TAC"). The District's emissions analysis must therefore be revised to reflect the higher vapor pressure and VOC and TAC emissions of Bakken crude oil. Moreover, tank inspection and monitoring requirements are too weak to ensure that fugitive emissions from the tanks are adequately controlled. District Rule 4623, section 6.1 only provides for tank inspections "on an annual basis" by the District. There are no other monitoring measures to ensure that the Project's tanks do not exceed the Reid Vapor Pressure assumed in the Air District's analysis and that fugitive emissions will not exceed the limits set forth in the Authority to Construct.

IV. The Retrofit of Existing Heaters Are Not Exempt from Emissions Offsets

The Application Review notes that because three existing heaters are being retrofitted solely to comply with District rules, the heaters are exempt from emissions offset requirements. However, all of the conditions for this exemption are not met in this case. *See* Section 4.6.8 ("For existing facilities, the installation or modification of an emission control technique performed solely for the purpose of compliance with the requirements of District, State or Federal air pollution control laws, regulations, or orders, as approved by the APCO, shall be exempt from offset requirements for all air pollutants provided all of the following conditions are met…") This includes condition 4.6.8.1, which requires that "[t]here shall be no increase in the physical or operational design of the *existing facility*, except for those changes to the design needed for the installation or modification of the emission control technique itself." (emphasis added). Here, the existing facility will undergo significant changes in its physical and operational design, including an increase in the Refinery's capacity to unload crude at the rail terminal and an increase in its capacity to refine both heavier and lighter crudes.

---

[34] Transportation Safety Board of Canada, TSB Laboratory Report LP148/2013, section 2.4, available at http://www.tsb.gc.ca/eng/enquetes-investigations/rail/2013/R13D0054/lab/20140306/LP1482013.asp (Exhibit FF).

[35] *See id.*, section 3.2.5 & notes 42-43 therein.

These changes will result in increased emissions from the existing heaters that are being retrofitted, which must be offset. According to the applicant, at least two of these heaters have been dormant for some time, and under the project, they will be reactivated. *See* Ex. HH (Kern County Environmental Impact Report Appendices noting post-project emissions of 19.44, 9.72, and 22.69 tons per year of CO from existing heaters compared to 0 tons per year under 2007 baseline conditions, and of 3.83, 2.40, and 4.47 tons per year of NOx compared to 0.30 tons per year under baseline conditions)[36]; Ex. II at 19 (Project Application noting heaters 21-H21 and 27-H2 were dormant during baseline period).[37]

V. All of the Emission Reduction Credits Proposed Are Invalid

The Air District has proposed to use emission reduction credit (ERC) certificate numbers S-4334-2, S-3465-5, S-3462-4, S-3458-3, and S-3663-1. Application Review at 46. These emission reductions credits come from three separate shutdowns or curtailments at the facility, all of which occurred decades ago: (1) the 1977 incineration of coker exhaust in the CO boiler—almost four decades ago (ERC S-3458-3, and S-3663-1); (2) the 1983 shutdown of the catalytic cracker, fluid coker, and CO boiler—more than three decades ago (ERC S-4334-2 & S-3465-5); and (3) the shutdown of the tailgas incinerator in 1992—more than two decades ago (ERC S-3462-4). *See* Ex. JJ.

Under District Rule 2201 and 2301, emission reductions used as ERCs must be "real, enforceable, quantifiable, surplus, and permanent." Rule 2201 § 3.2.1; Rule 2301 § 4.1. Given the many changes that have occurred at the refinery since 1977, including the recent shutdown and previous reconfigurations of the refinery, these decades-old reductions are no longer "real" and will not actually offset the refinery's significant projected air emissions. The notion that these shutdown units could still be operational today and "offset" the existing refinery's emissions, after the many reconfigurations and shutdowns that the refinery has undergone, is purely fictional.

Moreover, as explained below, all of the ERC credits are either invalid or may not be employed here. The Air District may not approve the Authority to Construct until valid ERCs are included.

A. The Air District May Not Employ Banked Offsets for NOx and VOC Emissions

The Air District proposes to offset the project's NOx and VOC emissions with ERC S-4334-2, for the 1983 "shutdown of catalytic cracker, fluid coker, & CO boiler," and with ERC S-

[36] *See* DEIR volume 2, Appendix B, available at http://www.co.kern.ca.us/planning/pdfs/eirs/alon_flexibility_project/Alon_DEIR_Vol2%20Cultural%20Redactions.pdf (Exhibit HH).

[37] For the same reasons, this modification is neither exempt from BACT. *See* Rule 2201, section 4.2.3 (requiring same conditions for BACT exemption).

3663-1, for the 1977 "incineration of coker exhaust in CO boiler." Ex. JJ. Because the District may not approve the use of offsets for NOx and VOC emissions until the 1-hour ozone plan is approved by EPA, the Air District may not issue the Authority to Construct in reliance on these offsets.

Air District Rule 2201 § 4.13.1 requires that "Major Source shutdowns or permanent curtailments in production or operating hours of a Major Source may not be used as offsets for emissions from . . . a Federal Major Modification . . . unless the ERC, or the emissions from which the ERC are derived, has been included in an EPA-approved attainment plan."

The San Joaquin Valley air basin is currently designated as in extreme nonattainment with the 1-hour standard for ozone, for which NOx and VOC emissions are precursors. The District does not yet have an approved attainment plan for the 1-hour ozone standard. Thus, the Air District may not use these banked emission reduction credits to offset the NOx and VOC emissions of this project.

B. Emission Reduction Credit Certificates S-3458-3 and S-3663-1 Are Invalid

ERC S-3458-3, for CO reduction, and S-3663-1, for VOC reduction, state that they were issued for "incineration of coker exhaust in CO boiler." Ex. JJ. The authority to construct for the CO boiler was issued on January 12, 1976, and operations began in May of 1977.[38] Because these reductions occurred prior to August 7, 1977, the credit given for these reductions is invalid, and may not be used here to offset project emissions. *See* 40 C.F.R. § 51.165(a)(2)(ii)(C)(1)(ii) ("in no event may credit be given for shutdowns that occurred before August 7, 1977.").

Both the U.S. Environmental Protection Agency (EPA) and the California Air Resources Board (CARB) submitted comments on the proposed emission reduction credits, explaining the many reasons why the credits are invalid.[39] Both EPA and CARB pointed out that credits were invalid because the application for banking credit was submitted beyond the required time limits; a completed application was not submitted until October 1985, almost ten years after the reduction occurred. EPA also explained that

> The reductions from the installation of the CO boiler are quite old. The burden is on the District to verify in its analysis that these reductions have not been assumed elsewhere (in the emissions inventory, the latest [air quality management plan], the attainment demonstration) and therefore are indeed surplus. In all likelihood, these reductions are not surplus since they occurred so long ago and

[38] *See* Letter, Raymond E. Menebroker, CARB, to Citron Toy, Kern County Air Pollution Control District (July 17, 1987) (Exhibit LL).

[39] *See* Letter, Raymond E. Menebroker, CARB, to Citron Toy, Kern County Air Pollution Control District (July 17, 1987) (Exhibit LL); Letter, David Howecamp, EPA, to Leon Hebertson, KCAPCD, (July 17, 1987) (Exhibit MM).

> probably are already reflected in the District's records and plans. The District must verify that these reductions are not credited elsewhere.

Ex. LL. The District did not provide EPA with verification that these reductions were not credited elsewhere. EPA further explained that:

> The reductions occurred prior to August 7, 1977 and are therefore too old to be granted credit. EPA has previously advised the District that banking credit may not be awarded for any reductions which occurred prior to the Clean Air Act Amendments of August 7, 1977. . . EPA will not recognize these reductions as valid offsets for any source wishing to purchase these ERCs for offsetting purpose.

Ibid. EPA warned that "any source which attempts to use these emission reductions as an offset may be subject to federal enforcement action." *Ibid.*

Because ERCs S-3458-3 and S-3663-1 are invalid and "subject to federal enforcement action" if used, the Air District may not employ them here to offset the project's CO and VOC emissions.

C. Emission Reduction Credit Certificate S-3462-4 Is Invalid

ERC S-3462-4, for PM10 reductions from the March 1992 shutdown of the tailgas incinerator, does not represent the bankable emission reduction from this shutdown, and is therefore invalid.

In the application review for ERC S-3462-4, the Air District explained that the emission reductions eligible for an emission reduction credit certificate include the baseline emissions of the tailgas incinerator reduced by a 10% deposit into the "Community Bank". *See* Application review at 5 ("10% of AER shall be deposited to the Community Bank; remaining AER qualifies for the ERC Certificate.") (Exhibit NN). With this reduction, the Air District stated that the Bankable Emission Reductions, available for an ERC Certificate, were:

Quarter 1 Jan-Mar	Quarter 2 Apr-Jun	Quarter 3 Jul-Sep	Quarter 4 Oct-Dec.
1,425.41 lbs	1,689.42 lbs	1611.54 lbs	1,776.42 lbs

Id. at 6. However, the Emission Reduction Certificate issued did not take the 10% reduction into account, and erroneously issued credits as:

Quarter 1 Jan-Mar	Quarter 2 Apr-Jun	Quarter 3 Jul-Sep	Quarter 4 Oct-Dec.
1,584 lbs	1,877 lbs	1,791 lbs	1,974 lbs

See Ex. JJ, ERC S-3462-4. Because this Certificate fails to comply with Air District Rule 2201 § 4.12.1 and 2301 § 4.2.2, it is invalid and may not be used to offset the project's PM10 emissions.

D. Emission Reduction Credit Certificate S-4334-2 and S-3465-5 Are Invalid

ERCs S-4334-2 and S-3465 state that they were issued for the "shutdown of catalytic cracker, fluid coker, & CO boiler." Ex. JJ. Because these certificates were originally applied for in 1987, more than 90 days after the 1983 shutdown occurred, the application was not timely filed and the certificates are invalid. *See* Letter from Leon Hebertson to L.E. Perrier (Aug. 27, 1987) (Exhibit OO).

The Air District acknowledged as much. In a letter on August 27, 1987 to Texaco Refining (the predecessor to the Alon Bakersfield Refinery), the Air District denied Texaco's original emission reduction credit application as untimely, explaining that:

> On July 31, 1987 we received your applications for Emission Reduction Credit Banking Certificates resulting from the November, 1985 [sic] shutdown of the Tosco T.C.C. Unit, Fluid Coker, and CO Boiler. Review of these applications reveals that this request is not timely. Rule 210.3, section C.4.(b) requires applications for banking of emissions reductions to be submitted within 90 days after such reduction occurs. Because your proposal does not comply with this requirement, your applications for Emission Reduction Credits Banking Certificates must be denied within 30 days.

Ex. OO. After Texaco objected to the Air District's denial, the Air District reversed course and granted the requested emission reduction credits on April 14, 1988. In explaining the change, the Air District capitulated to Texaco's erroneous interpretation that because Texaco had maintained its operating permit, it had not actually "shutdown," even though the equipment had last been operated in 1983. Application Review for Application #s 2007130/101, '130/201, '130/401, '130/501, and '130/601 (Jan. 14 1988) (Exhibit PP) at 2. This interpretation, however, conflicts with Rule 2301 § 3.14, which defines "shutdown" for the purposes of awarding emission reduction credits as "either the *earlier* of the permanent cessation of emissions from an emitting unit or the surrender of that unit's operating permit." (emphasis added).

The Air District had it right the first time: the application was untimely because it was received more than 90 days after the shutdown occurred. ERC certificates S-4334-2 and S-3465 are therefore invalid and may not be used to offset this project's NOx and SOx emissions.

***

For the foregoing reasons, we respectfully request the Air District to revise the BACT and emissions offsets analysis for the proposed Authority to Construct and to require the proper pollution controls and emissions offsets, in compliance with Rule 2201.

Sincerely,

Elizabeth Forsyth
Wendy Park
Earthjustice
50 California St., Suite 500
San Francisco, CA 94114
eforsyth@earthjustice.org
wpark@earthjustice.org
415-217-2000

Tom Frantz, President
Association of Irritated Residents
29389 Fresno Ave
Shafter, CA 93263
tom.frantz49@gmail.com
661-910-7734

Kassie Siegel, Director
Climate Law Institute
Center for Biological Diversity
P.O. Box 549
Joshua Tree, CA 92252
ksiegel@biologicaldiversity.org
760-366-2232 ext. 302

Devorah Ancel, Staff Attorney
Sierra Club Beyond Oil Campaign
85 Second Street, 2nd Floor
San Francisco, CA 94105
devorah.ancel@sierraclub.org
415-977-5721

Gordon Nipp
Sierra Club, Kern-Kaweah Chapter
Box 3357
Bakersfield, CA 93385-3357
gnipp@bak.rr.com
661-872-2432

EXHIBIT 6

May 30, 2014

Via FedEx to
Arnaud Marjollet, Director of Permit Services
San Joaquin Valley Unified Air Pollution Control District
34946 Flyover Court
Bakersfield, CA 93308

Re: Comments on Notice of Preliminary Decision for the Proposed Issuance of an Authority to Construct

Dear Mr. Marjollet:

On behalf of the Natural Resources Defense Council (NRDC), Global Community Monitor, Communities for a Better Environment, ForestEthics, the Kern-Kaweah Chapter of the Sierra Club, Sierra Club's Beyond Oil Campaign, Sequoia ForestKeeper, and Greenaction for Health and Environmental Justice, collectively which have over 1.4 million members and activists, 270,000 of whom are Californians and over a thousand of whom reside in Kern County, we submit the following comments on the Notice of Preliminary Decision for the Proposed Issuance of an Authority to Construct. The Notice of Preliminary Decision was issued on April 28, 2014, and indicated that the public comment period closes on June 2, 2014. Bakersfield Crude Terminal, LLC (Plains All American) applied for an Authority to Construct for the installation of four 24 bbl sump tanks and a 2,000 gallon oil-water separator tank, at the corner of South Lake Road and Santiago Road in Taft. These tanks are part of Plains All American's larger effort to build a crude-by-rail facility (the Project) in the South Kern Industrial Center. The Project, including the rail facility and the proposed tanks, must be considered together instead of piecemeal.

The Authority to Construct Application Review (the Application Review) states that the Kern County Planning and Community Development Department (Kern County) is the "lead agency" for the Project and notes that Kern County adopted a Notice of Exemption for the Project, citing to California Environmental Quality Act (CEQA) Guideline § 15300.1. Application Review at 15. The Application Review also states that the San Joaquin Valley Unified Air Pollution Control District (the Air District) is a "responsible agency" and has "discretionary approval power over the project." *Id.*

As discussed below, because no environmental review documents have been prepared for the Project by Kern County as required by CEQA, and because the Project is likely to have significant environmental impacts, the Air District must assume the role of lead agency and prepare an Environmental Impact Report (EIR) for the Project. Due to the significance of the potential impacts from the Project, the Air District should also hold a public hearing before moving forward.

I. The Air District Must Conduct Environmental Review Under CEQA

Under CEQA, where a project is approved by more than one public agency, "one public agency shall be responsible for preparing an EIR or negative declaration for the project." 14 Cal. Code Regs. § 15050. This agency is the "lead agency" and all other agencies which have discretionary approval power over the project are "responsible agencies." *See id.*; *see also* 14 Cal. Code Regs. § 15381. In general, a lead agency prepares the environmental review for a project, and "[a] responsible agency complies with CEQA by considering the EIR or negative declaration prepared by the lead agency and by reaching its own conclusions on whether and how to approve the project involved." 14 Cal. Code Regs. § 15096.

However, when "a responsible agency is called on to grant an approval for a project subject to CEQA for which another public agency was the appropriate lead agency, the responsible agency shall assume the role of the lead agency when . . . [t]he lead agency did not prepare any environmental documents for the project, and the statute of limitations has expired for a challenge to the action of the appropriate lead agency." 14 Cal. Code Regs. § 15052.

The Kern County Planning and Community Development Department, the presumptive lead agency, has prepared no environmental documents for the Bakersfield Crude Terminal under CEQA.[1] Because Kern County has prepared no environmental documents, the Air District must assume the role of lead agency and prepare an EIR for the Bakersfield Crude Terminal. 14 Cal. Code Regs. § 15052.

The Bakersfield Crude Terminal is subject to CEQA, and Kern County's claim that its approval was exempt from CEQA was improper. In its Notice of Exemption, Kern County cited 14 Cal. Code Regs. § 15300.1 ("Relation to Ministerial Projects"),[2] but otherwise did not explain its reasoning why the Project is exempt.[3] The County's previously proposed Mitigated Negative Declaration for the pipeline connecting to the terminal provides slightly more

---

[1] "'Environmental documents' means initial studies, negative declarations, draft and final EIRs, documents prepared as substitutes for EIRs and negative declarations under a program certified pursuant to Public Resources Code Section 21080.5, and documents prepared under [the National Environmental Policy Act] and used by a state or local agency in the place of an initial study, negative declaration, or an EIR." 14 Cal. Code Regs. § 15361.

[2] 14 Cal. Code Regs. § 15300.1 provides that "Section 21080 of the Public Resources Code exempts from the application of CEQA those projects over which public agencies exercise only ministerial authority. Since ministerial projects are already exempt, Categorical Exemptions should be applied only where a project is not ministerial under a public agency's statutes and ordinances. The inclusion of activities which may be ministerial within the classes and examples contained in this article shall not be construed as a finding by the Secretary for resources that such an activity is discretionary."

[3] Kern County Planning and Community Development Department, Notice of Exemption for Ministerial Permit No. 2, Map No. 158.

explanation. There, the County claimed that the Bakersfield Crude Terminal was exempt from CEQA review because:

> "[The Bakersfield Crude Terminal] . . . will be constructed on property that is located within the South Kern Industrial Center (SKIC) . . . The SKIC facility is subject to the SKIC Specific Plan; which was previously updated and approved by the Kern County Board of Supervisors on October 22, 2002. As required by CEQA, an Environmental Impact Report (SCH No. 91122017) which analyzed that project was also prepared and certified by the Board at that time. The certified EIR requires that all future industrial development be developed in accordance with the SKIC Specific Plan; and the [Bakersfield Crude Terminal] Project was previously found to be consistent with the South Kern Industrial Center Specific Plan and was granted a Notice of Exemption on April 3, 2012."[4]

In other words, it appears that the County decided that the Bakersfield Crude Terminal was exempt from environmental review because it believed that it had only a duty to review the Project for consistency with the South Kern Industrial Center Specific Plan (the Specific Plan), and, finding that that the Project was consistent with the Specific Plan, believed that its approval of the Project was therefore a "ministerial" decision and exempt from CEQA. The County was mistaken.

Ministerial decisions are decisions which involve little or no personal judgment by the agency on the wisdom or manner of carrying out the project. 14 Cal. Code Regs. § 15369. "Common examples of ministerial permits include automobile registrations, dog licenses, and marriage licenses." *Id.* Ministerial decisions may include approvals of certain projects which are consistent with a specific plan, general plan, community plan, or zoning laws, when there are no impacts from the project which have not been previously addressed in the earlier plan. *See, e.g.,* Cal. Pub. Res. Code § 21083.3; Cal. Gov. Code § 65457; *Health First v. March Joint Powers Authority*, 174 Cal. App. 4th 1135 (Cal Ct. App. 2009). When projects have impacts beyond the impacts envisioned by the prior plan, however, CEQA applies and environmental review must be conducted. *See, e.g.,* 14 Cal. Code Regs. § 15183(b)(1)-(2); 14 Cal. Code Regs. § 15182(c).

The South Kern Industrial Center Specific Plan and related EIRs were developed in 1992 and amended in 2002.[5] The Plan designated over a hundred possible uses for the South Kern Industrial Center, from a "fire or police station" to a "saw mill," but notably did not list "crude-by-rail terminal" as a permitted use.[6] These documents have never contemplated a crude-by-rail terminal at the site, let alone evaluated the impacts from the Project in particular.

---

[4] Kern County Planning and Community Development Department, Notice of Intent to Adopt a Mitigated Negative Declaration for 5568TT; Nonexclusive Franchise Pipeline Agreement (Bakersfield Crude Terminal Pipeline Project by Bakersfield Crude Terminal, LLC (PP14145)) at 1.

[5] *See* Kern County Planning Department, South Kern Industrial Center Specific Plan As Amended (2002); Kern County Planning Department, Final Supplement to the Environmental Impact Report for the South Kern Industrial Center Specific Plan (2002).

[6] Kern County Planning Department, South Kern Industrial Center Specific Plan As Amended 20-27 (2002).

No provision in CEQA allows a governmental entity to designate a parcel of land as "anything goes" and then approve any sort of project on the parcel without review. Instead, CEQA review is required for future projects within the planning area, when the impacts were not previously addressed in the plan. Indeed, the County seems to recognize as much, conducting a supplemental EIR and amending the Specific Plan to allow a composting facility in the Industrial Center.[7] Because the Specific Plan did not address the specific crude-by-rail terminal at issue here, the County was required under CEQA to undergo environmental review for this Project, and its approval of the Project as "ministerial" was improper.

In any event, even if Kern County's finding that *its* approval was ministerial was correct, it would not insulate the Air District from its requirement under CEQA to conduct environmental review, because the Air District has admitted its approval is not ministerial. Application Review at 15.

Accordingly, because no environmental documents have been prepared for this Project by Kern County, the Air District must step in as lead agency and conduct the required review before the Air District may approve construction on the Project. 14 Cal. Code Regs. § 15052.

II. Because the Project Will Have Significant Impacts, the Air District Must Prepare an EIR

The scope of the Project is not disclosed in the Application Review. However, the full scope of the Project appears to ultimately include the transport of 140,000 barrels per day (bpd), in two mile-long "unit trains" of crude oil, ultimately carrying crude to refineries in Los Angeles County.[8] This Project is likely to have significant environmental impacts which must be evaluated in an EIR. To the extent that the Air District does not currently have sufficient information to evaluate and mitigate these impacts, it must conduct a reasonable investigation into these facts. *See City of Redlands v. Cnty. of San Bernardino*, 96 Cal. App. 4th 398, 408 (2002) (stating that an agency cannot "hide behind its own failure to gather relevant data.").

Impacts which must be evaluated include, at a minimum, (1) impacts from unloading, storing, and handling crudes; (2) impacts from transporting crude by rail; (3) construction and operation impacts from the rail project and any offloading or other transport facilities; (3) cumulative impacts from other pollution sources, including other crude transportation projects; and (4) indirect impacts from refining crude oil.

---

[7] *See* Kern County Planning Department, Final Supplement to the Environmental Impact Report for South Kern Industrial Center Specific Plan.

[8] *See* John Cox, *With Oil Pouring In, Bakersfield to Get Unique Rail-to-Pipeline Terminals*, The Bakersfield Californian (Nov. 9, 2013), *available at* http://www.bakersfieldcalifornian.com/business/oil/x1997480310/With-oil-pouring-in-Bakersfield-to-get-unique-rail-to-pipeline-terminals.

A. The Air District Must Evaluate the Impacts From Unloading, Storing, and Handling Crudes

The Application Review does not explain how the crude oil will be offloaded from rail cars to the pipeline. Unloading, storing, and handling crudes could have significant environmental impacts, including emitting VOCs, HAPs, and malodorous sulfur compounds, and increasing the risk of a spill. The Application Review, however, lacks required analysis and mitigation of the potential air emissions and spills due to offloading and handling the crude. These impacts must be analyzed and mitigated in an EIR.

B. The Air District Must Evaluate the Impacts from Transporting the Crude by Rail

The impacts from transporting crude by rail are likely to be significant, including impacts from increased air emissions, spills, and noise. These impacts must be evaluated and mitigated in an EIR.

1. The Air District Must Evaluate Air Emissions from Rail

This Project would ultimately transport 140,000 bpd of crude oil in two unit trains, or 200 rail cars per day.[9] The diesel emissions from these railcars are likely to be significant and must be evaluated.

The diesel engines in locomotives emit fine particulate matter (particles that are 2.5 microns or less in diameter or "PM2.5"), NO_x, and VOCs along with many other toxic chemicals and greenhouse gases.[10] The soot in diesel exhaust—diesel PM—is especially toxic, not only due to the very small size of the soot particles, but also because these particles contain roughly 40 different toxic air contaminants, 15 of which are recognized carcinogens.[11] In fact,

---

[9] John Cox, *With Oil Pouring In, Bakersfield to Get Unique Rail-to-Pipeline Terminals*, The Bakersfield Californian (Nov. 9, 2013), *available at* http://www.bakersfieldcalifornian.com/business/oil/x1997480310/With-oil-pouring-in-Bakersfield-to-get-unique-rail-to-pipeline-terminals.

[10] NRDC, Clean Cargo: A Guide to Reducing Diesel Air Pollution from the Freight Industry in Your Community (Jan. 2013), *available at* http://www.nrdc.org/air/diesel-exhaust/files/clean-cargo-toolkit.pdf.

[11] Diesel exhaust contains the following toxic constituents: acetaldehyde, acrolein, aniline, antimony compounds, arsenic, benzene, beryllium compounds, biphenyl, bis[2-ethylhexyl]phthalate, 1,3-butadiene, cadmium, chlorine, chlorobenzene, chromium compounds, cobalt compounds, cresol isomers, cyanide compounds, dioxins and dibenzofurans, dibutylphthalate, ethyl benzene, formaldehyde, hexane, inorganic lead, manganese compounds, mercury compounds, methanol, methyl ethyl ketone, naphthalene, nickel, 4-nitrobiphenyl, phenol, phosphorus, POM including PAHs and their derivatives, propionaldehyde, selenium compounds, styrene, toluene, xylenes. *See* California EPA Office of Environmental Health Hazard Assessment, *Health Effects of Diesel Exhaust*, *available at* www.oehha.ca.gov/public_info/facts/dieselfacts.html; California EPA, Office of Environmental

diesel PM itself has been identified as a carcinogen by the World Health Organization as well as the State of California, which lists it as a "Toxic Air Contaminant."[12] Dozens of studies have shown a high risk of lung cancer in occupations with high diesel exposures, including rail workers, truck drivers, and miners. Recent studies of miners indicate that the most heavily exposed workers have a risk of lung cancer approaching that of heavy smokers; studies also show that elevated risks of lung cancer apply not only to workers but to the general population in areas with high levels of diesel PM (*e.g.*, near freeways and busy freight corridors).[13]

Moreover, diesel pollution is estimated to contribute to roughly 60,000 or more premature deaths attributable to outdoor air pollution in the U.S.[14] People who live or go to school near railyards face disproportionately higher exposure to diesel exhaust and associated health impacts, including increased risks of asthma and other respiratory effects, cancer, adverse birth outcomes, adverse impacts to the brain (including potentially higher risk of autism),[15] heart disease, and premature death.[16] Detailed health assessments of some major California

---

Health Hazard Assessment, *Executive Summary for the "Proposed Identification of Diesel Exhaust as a Toxic Air Contaminant"* (Apr. 22, 1998), *available at* www.oehha.ca.gov/air/toxic_contaminants/html/Diesel%20Exhaust.htm.

[12] *See* California EPA Office of Environmental Health Hazard Assessment, *Chemicals Known to the State to Cause Cancer or Reproductive Toxicity* (May 24, 2013), *available at* http://oehha.ca.gov/prop65/prop65_list/files/P65single052413.pdf;World Health Organization, *IARC: Diesel Engine Exhaust Carcinogenic* (June 12, 2012), *available at* http://press.iarc.fr/pr213_E.pdf.

[13] Silverman, D.T. et al., *The Diesel Exhaust in Miners Study: A Nested Case-Control Study of Lung Cancer and Diesel Exhaust*, Journal of the National Cancer Institute, 104(11) (2012), *avai lable at* www.oxfordjournals.org/our_journals/jnci/press_releases/silvermandjs034.pdf.

[14] According to U.S. EPA, the following regulations avoid 52,000 annual premature deaths by 2030: 2001 highway Diesel (8,300); 2004 Nonroad Diesel (12,000), 2008 Locomotive/Marine (1,100), 2010 Emission Control Area (IMO ECA)/marine fuel (31,000). Assuming a 90% diesel PM reduction from each rule (though some of the rules yield 95% reductions), this means that diesel PM emissions led to roughly 58,200 premature deaths before the rules were in place. This is likely a significant under-estimate since several diesel PM sources are not accounted for here, such as light duty diesel trucks and stationary diesel engines.

[15] Autism spectrum disorders (ASDs) - a group of developmental disabilities that can cause significant social, communication and behavioral challenges - have increased 78% since 2002 to impact 1 in 88 children, according to the Centers for Disease Control and Prevention (CDC). *See* Centers for Disease Control and Prevention, *Prevalence of Autism Spectrum Disorders – Autism and Developmental Disabilities Monitoring Network, 14 Sites, United States, 2008,* Morbidity and Mortality Weekly Report (Mar. 30, 2012), *available at* http://www.cdc.gov/mmwr/pdf/ss/ss6103.pdf. While experts are still working to better understand the risk factors, they agree that risk factors are not only genetic but environmental. Several recent studies in California have shown how air pollution contributes to autism, finding elevated risks in areas of elevated air pollution and in close proximity to freeways.

[16] *See, e.g.*, Kim, J. et al., *Traffic-related Air Pollution near Busy Roads: The East Bay Children's Respiratory Health Study*, American Journal of Respiratory and Critical Care Medicine, 170: 520-526 (2004); McConnell, R. et al., *Childhood Incident Asthma and Traffic-*

railyards found extremely high cancer risk from the operations, with elevated cancer risk extending as far as eight miles away.[17]

Forest ecosystems are also negatively impacted by diesel pollution. Nearby Sequoia National Forest and Sequoia-Kings Canyon National Parks are among the most polluted parks and forests in the federal system. An increase in diesel emissions could exacerbate air pollution impacts on these and other ecosystems, including contributing to acid rain, diminishing visibility, and impacting plant and animals.[18]

Locomotives may produce about half of all harmful diesel particulate matter emissions in railyards.[19] Locomotive engines are not only highly polluting, they are incredibly long-lasting, which means many older, high-polluting locomotives are still in operation throughout the U.S.[20] Emissions standards for locomotives lag behind the standards for trucks and even off-road equipment. New Tier 4 standards, comparable to those for modern trucks, will not start to be phased in until 2015; these Tier 4 locomotives will emit 80% less NO_x and 90% less PM than a train engine built in 2008.[21] Where Tier 4 locomotives are not yet available, diesel particulate filters (DPFs) and selective catalytic reduction (SCR, a common catalyst based technology used

---

Related Air Pollution at Home and School, Environmental Health Perspectives, 118(7): 1021-1026 (2010); Van Vliet, P., M. Knape, et al., *Motor Vehicle Exhaust and Chronic Respiratory Symptoms in Children Living Near Freeways*, Environmental Research, 74(2): 122-32 (1997); Appatova, A.S. et al., *Proximal Exposure of Public Schools and Students to Major Roadways: A Nationwide U.S. Survey*, Journal of Environmental Planning and Management, 51(5): 631-646 (2008); Gauderman, W.J. et al., *Effect of Exposure to Traffic on Lung Development from 10 to 18 Years of Age: a Cohort Study*, 369(19561): 571-7 (2007); Ying-Ying Meng et al., *Are Frequent Asthma Symptoms Among Low-Income Individuals Related to Heavy Traffic Near Homes, Vulnerabilities, or Both?*, 18(5): 343-350 (2008); Venn et al., *Living Near A Main Road and the Risk of Wheezing Illness in Children*, American Journal of Respiratory and Critical Care Medicine, 164: 2177-2180 (2001); Shao Lin et al., *Childhood Asthma Hospitalization and Residential Exposure to State Route Traffic*, Environmental Research Section A, 88: 73-81 (2002).

[17] California Air Resources Board, *Railyard Health Risk Assessments and Mitigation Measures*, *available at* http://www.arb.ca.gov/railyard/hra/hra.htm. Cancer risks exceed 1,000 per million next to some of the largest railyards.

[18] *See* National Park Service, Sequoia and Kings Canyon, http://www.nps.gov/seki/naturescience/air.htm.

[19] California Air Resources Board, *Supplement to the June 2010 Staff Report on Proposed Actions to Further Reduce Diesel Particulate Matter at High-Priority California Railyards*, p. 2 (July 5, 2011) *available at* http://www.arb.ca.gov/railyard/commitments/suppcomceqa070511.pdf.

[20] EPA, Fact Sheet: *EPA Finalizes More Stringent Emissions Standards for Locomotive Engines and Marine Compression-Ignition Engines* (EPA420-F-08-004, March 2008); *available at* http://www.epa.gov/otaq/regs/nonroad/420f08004.pdf.

[21] *Id.*

to reduce NO_x emissions) can be installed on existing locomotives to achieve emissions reductions similar to those of certified Tier 4s.[22]

Also, very high concentrations of NO_2 may be present in the exhaust emissions from diesel train engines that would be used at the rail terminal. These emissions can and must be mitigated, for example by using an electronic positioning system,[23] rather than the locomotive engine, to move the cars through the unloading facility.

In addition to electronic positioning systems, mitigations for line haul locomotives should also be included. We recommend Tier 4 compliant locomotives or locomotives retrofitted with exhaust controls that can meet Tier 4 standards; and a commitment not to idle locomotive engines in the unloading facility, including the use of locomotive idle controls.

The failure to disclose or evaluate rail diesel emissions from this Project is particularly egregious, given that the Project is located in the San Joaquin Valley Air Basin, which is in extreme nonattainment for ozone (VOC and NOx) and serious nonattainment for PM2.5.[24] The American Lung Association, in its most recent state of the air report, gives Kern County a failing grade for both ozone and particulate matter pollution, finding that the region suffers some of the worst air pollution in the nation and that almost one in ten residents suffers from asthma.[25] Recent research found that almost one-third of residents in this region face both high environmental risks (such as toxic air pollution) and social vulnerability (such as poverty), which in turn increases susceptibility to environmental hazards and increases risks of health problems. [26] An EIR must be prepared which analyzes the air impacts of this Project in the context of the San Joaquin Valley Air Basin.

2. The Air District Must Evaluate the Risk of Rail Accidents or Spills

As crude transport by rail has increased, the number of spills from railcars carrying crude has skyrocketed. This includes both accidents, such as derailments, but also nonaccident releases from leaking valves or vents.[27] At the same time, rail safety standards have not kept up with increase in crude transport. And due to the nature of the very dense and toxic diluted

---

[22] West Coast Collaborative, Locomotive and Rail Sector Meeting Materials (2012), *available at* http://westcoastcollaborative.org/wkgrp-loco.htm.

[23] *See, e.g.*, Oregon Department of Environmental Quality, *Standard Air Contaminant Discharge Permit, Coyote Island Terminal, LLC* p. 3, Condition 1.1.a (July 24, 2010) *available at* http://www.oregon.gov/deq/docs/airpermitRep.pdf (an electric powered positioning system for maneuvering railcars through the Railcar Unloading Building).

[24] *See* San Joaquin Valley Air Pollution Control District, *Ambient Air Quality Standards & Valley Attainment Status*, *available at* https://www.valleyair.org/aqinfo/attainment.htm.

[25] *See* American Lung Association, *State of the Air - Kern*, *available at* http://www.stateoftheair.org/2013/states/california/kern-06029.html.

[26] Jonathan London et al., *Land of Risk, Land of Opportunity*, U.C. Davis Center for Regional Change (Nov. 2011), *available at* http://regionalchange.ucdavis.edu/ourwork/publications/ceva-sjv/full-report-land-of-risk-land-of-opportunity/view.

[27] Mike Soraghan, *Crude Mishaps on Trains Spike As Rail Carries More Oil*, E&E (July 17, 2013), *available at* http://www.eenews.net/stories/1059984505.

bitumen that the rail cars are likely to carry, these fuels in particular pose an especially serious and costly environmental and public health threat when accidentally released into the environment.[28]

Spill response is affected by the type of crude. For example, EPA recently noted that spills of diluted bitumen require different response action or equipment than for conventional oil spills.[29] DilBit spills are simply more difficult and more expensive to clean up.[30] For example, three years after a major spill of DilBit into the Kalamazoo River in Michigan, the heavy oil remains at the bottom of the river, requiring dredging and $1 billion clean-up cost.[31] Public health officials in Michigan found numerous acute health impacts lasting for days and spanning numerous areas: cardiovascular, dermal, gastrointestinal, neurological, ocular, renal, respiratory and other impacts. [32] The Air District must disclose what sort of crude oil will be transported, and evaluate the consequences of a spill, including analyzing what the wildlife, ecosystem, economic, and human health implications of a spill would be. An EIR must be prepared which analyzes and mitigates these spill risks.

3. The Air District Must Evaluate Public Safety and Noise Impacts from Rail Transport

The Application Review fails to discuss how many trains per day will be delivered, when the rail activity would occur and whether it would travel near residential areas, whether train crossings will impact traffic flow and emergency vehicle access, whether there would be nighttime and weekend activity, and whether there would be increased noise impacts from the horns of trains. These issues must be analyzed in an EIR and significant impacts mitigated.

---

[28] *Id.*; *see also* Ian Goodman and Brigid Rowan, *Analysis of the Potential Costs of Accidents/Spills Related to Crude by Rail* (Nov. 8, 2013), *available at* http://action.sierraclub.org/site/DocServer/PHMSA-ANPR_-Comments-NRDC-SierraClub-OCI-Final.pdf?docID=15001.

[29] EPA, *Comment Letter to US Department of State Regarding the Supplemental Draft Environmental Impact Statement from TransCanada's Proposed Keystone XL project* (2013), *available at* http://www.epa.gov/Compliance/nepa/keystone-xl-project-epa-comment-letter-20130056.pdf.

[30] Environmental Working Group, Poisons in the Pipeline, Tests Find Toxic Stew in Oil Spill, p. 7 (June 2013), *available at* http://static.ewg.org/pdf/Poisons_In_the_Pipeline.pdf.

[31] EPA, *Comment Letter to US Department of State Regarding the Supplemental Draft Environmental Impact Statement from TransCanada's Proposed Keystone XL project* (2013), *available at* http://www.epa.gov/Compliance/nepa/keystone-xl-project-epa-comment-letter-20130056.pdf.

[32] Michigan Department of Community Health, *Acute Health Impacts of the Enbridge Oil Spill* (Nov. 2010), *available at* http://www.michigan.gov/documents/mdch/enbridge_oil_spill_epi_report_with_cover_11_22_10_339101_7.pdf; Michigan Department of Community Health, *Kalamazoo River/Enbridge Spill: Evaluation of Crude Oil Release to Talmadge Creek and Kalamazoo River on Residential Drinking Water Wells in Nearby Communities*, p. 90 (2013), *available at* http://www.atsdr.cdc.gov/HAC/pha/EnbridgeSpill/EnbridgeSpillPHAFINAL02272013.pdf.

In particular, noise levels from this Project are likely to be above the level that EPA states is significant. EPA holds that a noise impact is significant if it exceeds 55 DNL (the day-night average sound level), identified as the requisite level with an adequate margin of safety for areas with outdoor uses, including residential and recreational uses.[33] The Federal Rail Administration estimates that railroad horns are in the 95-115 dBA (decibels adjusted) range from 100 feet away and that "the noise resulting from the sounding of train horns has a similar impact to that of low flying aircraft and emergency vehicle sirens."[34] However, no analysis or mitigation for these impacts has been prepared. Mitigating noise impacts is important not only to address the nuisance aspect of it but also because research on noise from transportation shows significant health impacts.

a. Communication Interference

A primary concern in environmental noise problems is communication interference including speech interference and interference with everyday activities such as watching television. Normal conversational speech is in the range of 60 to 65 dBA and any noise in this range or louder may interfere with speech.

b. Sleep Interference

Sleep interference is a major noise concern in noise assessment and is most critical during nighttime hours. Noise can make it difficult to fall asleep, create momentary disturbances of natural sleep patterns by causing shifts from deep to lighter stages and cause awakening. Extensive research has been conducted on the effect of noise on sleep disturbance. Recommended values for desired sound levels in residential bedrooms range from 25 to 45 dBA, with 35 to 40 dBA being the norm.

The National Association of Noise Control Officials has published data on the probability of sleep disturbance with various single event noise levels. Based on experimental sleep data as related to noise exposure, a 75 dBA interior noise level event will cause noise induced awakening in 30% of the cases.

c. Physiological Responses

Physiological responses to noise include the measurable effects of noise on people such as changes in pulse rate and blood pressure. Generally, physiological responses are a reaction to a loud, short-term noise, such as a rifle shot or a loud jet overflight, or in this case the horn of a train. Noise above 60 decibels has been shown to have distinct psychological impacts, including

---

[33] *See* EPA, *Information on Levels of Environmental Noise Requisite to Protect Public Health and Welfare with an Adequate Margin of Safety* 21 (Mar. 1974), *available at* http://www.nonoise.org/library/levels74/levels74.htm.

[34] Federal Rail Administration, Horn Noise FAQ, *available at* http://www.fra.dot.gov/Page/P0599.

impairing children's mental health, concentration, and classroom behavior.[35] Other studies show that chronic noise exposure contributes to a worsening of heart disease and higher rates of stroke, after accounting for the risks association with air pollution.[36]

Annoyance is a very individual characteristic which can vary widely from person to person. What one person considers tolerable can be quite unbearable to another of equal hearing capability. The level of annoyance depends on the characteristics of the noise, defined as the loudness, frequency, time and duration of the noise, and how much speech and/or sleep interference results from the noise. The level of annoyance is also a function of the attitude of the receiver. Personal sensitivity to noise varies widely. It has been estimated that 2-10% of the population is highly susceptible to annoyance from noise not of their own making, while approximately 20% is unaffected by noise.

C. The Air District Must Evaluate the Cumulative Construction and Operation Impacts from the Rail Project and Any Other Offloading or Transport Facilities

The construction and operation of this Project includes a rail terminal and related facilities, along with transportation infrastructure to connecting oil pipelines, collectively which are likely to have significant impacts, including on the surrounding farmland, air quality, water quality, biological resources, noise, population and housing, transportation and traffic, and utilities and service systems. These cumulative construction impacts must be disclosed and mitigated.

D. The Air District Must Evaluate Cumulative Impacts From Other Pollution Sources, including Other Crude Transportation Projects

Cumulative impacts analysis is necessary because "environmental damage often occurs incrementally from a variety of small sources [that] appear insignificant when considered

---

[35] Matsuoka, M., Hricko, Al, Gottlieb, R., and De Lara, J., *Global Trade Impacts: Addressing the Health, Social and Environmental Consequences of Moving International Freight through Our Communities, Occidental College and University of Southern California* (2011) (hereinafter "Global Trade Impacts"), citing World Health Organization, Guidelines for Community Noise, Chapter 3, Adverse Health Effects of Noise (1999), *available at* http://www.who.int/docstore/peh/noise/Comnoise3.htm; Van Kempen, E.E. et al., *Children's Annoyance Reactions to Aircraft and Road Traffic Noise*, J. Accoust. Soc. Am. 125(2): 895-904 (2009); U.S. Department of Transportation, Federal Railroad Administration, *The General Health Effects of Transportation Noise* (2002), *available at* http://www.fra.dot.gov/eLib/Details/L02689; Lercher, P., *Ambient Neighborhood Noise and Children's Mental Health*, Occup. Environ. Med., 59(6): 380-6 (2002); Evans, G.W., *Child Development and the Physical Environment*, Annual Review of Psychology 57: 423-51 (2006).

[36] Global Trade Impacts at 18, citing Babisch, W., *Transportation Noise and Cardiovascular Risk: Updated Review and Synthesis of Epidemiological Studies Indicate that the Evidence Has Increased*, Noise & Health 8(30): 1-29 (2006); Sorensen, M. et al., *Road Traffic Noise and Stroke: A Prospective Cohort Study*, Eur. Heart J. (Jan. 25, 2011).

individually, but assume threatening dimensions when considered collectively with other sources with which they interact." *Communities for a Better Env't v. California Res. Agency*, 103 Cal. App. 4th 98, 114 (2002). The Air District must evaluate the cumulative effect of other existing and proposed air pollution sources in the area, including the multiple crude transportation projects being proposed and constructed in California. Most importantly, the Air District must analyze the Alon Bakersfield Refinery Crude Flexibility Project, which would also expand crude-by-rail facilities and utilize dormant refinery capacity in Bakersfield.[37] Other California crude transportation projects which should be addressed include: the Valero Benicia Crude by Rail project, the Valero Wilmington project, the Kinder Morgan Richmond project, the McClellan project, the WesPac Pittsburg Energy Infrastructure project, and the Phillips 66 projects.[38] The cumulative environmental impacts of these projects is likely significant.

E. The Air District Must Fully Analyze and Mitigate Indirect Air Impacts From Refining Crude Oil

When evaluating whether a project will have significant environmental impacts, the lead agency must consider both the direct effects of the project and the reasonably foreseeable indirect effects. 14 Cal. Code Regs. § 15064. "An indirect physical change in the environment is a physical change in the environment which is not immediately related to the project, but which is caused indirectly by the project." *Id.* § 15064(d)(2). "For example, the construction of a new sewage treatment plant may facilitate population growth in the service area due to the increase in sewage treatment capacity and may lead to an increase in air pollution." *Id.* CEQA is clear that lead agencies must evaluate impacts outside the project area: "[N]o statute (in CEQA or elsewhere) imposes any per se geographical limit on otherwise appropriate CEQA evaluation of a project's environmental impacts." *Muzzy Ranch Co. v. Solano Cnty. Airport Land Use Comm'n*, 41 Cal. 4th 372, 387 (2007). "Indeed, the purpose of CEQA would be undermined if the appropriate governmental agencies went forward without an awareness of the effects a project will have on areas outside of the boundaries of the project area." *Napa Citizens for Honest Gov't v. Napa Cnty. Bd. of Supervisors*, 91 Cal. App. 4th 342, 369 (2001).

An EIR must be prepared by the Air District which evaluates the indirect effects of building the proposed Project, including the indirect effects on air emissions from refineries due to processing the types of crude oil transported by Bakersfield Crude Terminal. As discussed

---

[37] Kern County Planning and Development, *Draft Environmental Impact Report for Alon Bakersfield Refinery Crude Flexibility Project, available at* http://www.co.kern.ca.us/planning/pdfs/eirs/alon_flexibility_project/Alon_DEIR_Vol1.pdf.

[38] *See Factbox-U.S. Crude-by-Rail Projects*, Reuters (Feb. 12, 2014); WesPac Pittsburg Energy Infrastructure Project, *available at* http://www.ci.pittsburg.ca.us/index.aspx?page=700; Jean Tepperman, *Environmentalists Sue to Block Explosive Fracked Oil Shipments in Richmond*, East Bay Express (Mar. 31, 2014), *available at* http://www.eastbayexpress.com/SevenDays/archives/2014/03/31/environmentalists-sue-to-block-explosive-fracked-oil-shipments-in-richmond; Curtis Tate and Tony Bizjak, *Sacramento Officials Kept in Dark About Crude Oil Transfers At Rail Facility*, Sacramento Bee (Apr. 9, 2014), *available at* http://www.sacbee.com/2014/03/28/6277119/sacramento-officials-kept-in-dark.html.

below, the indirect effects of this Project on refinery emissions are likely to be significant. The Air District must analyze the project's indirect air impacts on refinery communities in an EIR. [39]

An EIR should be prepared which, at a minimum, discloses and analyzes: (1) the amount of crude oil transported by the pipeline; (2) the type of crude oil, including crude assay, of the crude to be transported; (3) where the crude oil will be transported to and in what quantities; and (4) the impact on refinery capacity, operations, and air emissions from processing these crudes.

1. There is Evidence that this Project is Likely to Bring in Significant Quantities of Tar Sands Crude

The Application Review does not indicate the amount or type of heavy crude oil to be transported. There is substantial evidence that Plains All American intends ultimately to transport 140,000 barrels per day (bpd) of crude oil through the Project to refineries in Los Angeles County.[40] This amount represents almost nine percent of the total amount of oil refined in the entire state of California last year.[41] A project of this magnitude is likely to have a significant effect on the operations of Southern California refineries, which in turn could have significant air quality impacts. These impacts must be evaluated.

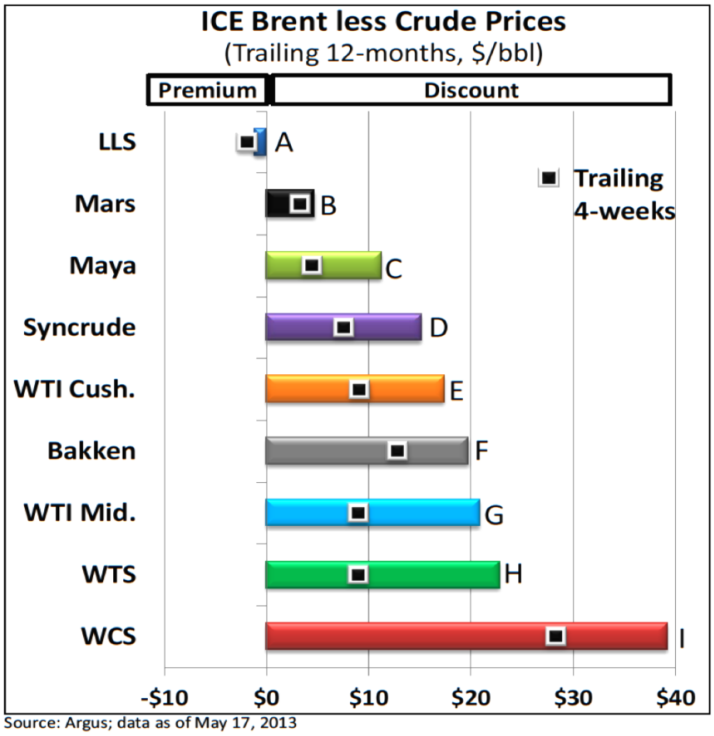

Figure 1: Cost-Advantaged Crudes That Could Be Imported By Rail

[39] The following comments on the impact of refining various crudes are adapted in part from analysis Dr. Phyllis Fox provided for NRDC on the Valero Crude-by-Rail project. *See* Dr. Phyllis Fox, *Comments on the Initial Study/Mitigated Negative Declaration (IS/MND) for the Valero Crude by Rail Project* (July 1, 2013), *available at* http://www.ci.benicia.ca.us/vertical/sites/%7B3436CBED-6A58-4FEF-BFDF-5F9331215932%7D/uploads/Report_by_Dr._Phyllis_Fox.pdf.

[40] *See* John Cox, *With Oil Pouring In, Bakersfield to Get Unique Rail-to-Pipeline Terminals*, The Bakersfield Californian (Nov. 9, 2013), *available at* http://www.bakersfieldcalifornian.com/business/oil/x1997480310/With-oil-pouring-in-Bakersfield-to-get-unique-rail-to-pipeline-terminals.

[41] U.S. Energy Information Administration, Number and Capacity of Petroleum Refineries in California (2013 operating capacity was 1,625,200 barrels per day), *available at* http://www.eia.gov/dnav/pet/pet_pnp_cap1_dcu_sca_a.htm.

Moreover, although the Application Review currently does not disclose what type of heavy crude oil will be transported by the pipeline, the project is likely to bring in heavy, high-sulfur crudes from Canada. These crudes, such as those derived from Canadian tar sands bitumens, are the most economically attractive source of crude oil and are currently only available in large quantities by rail transport.[42]

The list of cost-advantaged crudes in Figure 1 indicates that the most cost-advantaged crude is Western Canadian Select (WCS),[43] which is Canadian tar sands bitumen diluted to pipeline specifications with 25% to 30% diluent or a "DilBit," and which sells for a discount of nearly $40/bbl compared to Intercontinental Exchange (ICE) Brent.[44] Rail delivery costs for heavy crude may be somewhat higher, and heavy, sour crudes are less valuable than Brent (the global benchmark for light, sweet crudes). Still, the price of WCS delivered to Bakersfield is likely lower than (and very likely competitive with), compared with all the other cost-advantaged crudes (Fig. 1). Tar sands crudes are produced in Northern Alberta, which is landlocked and remote from the refineries that can process these crudes. Compared with other potential markets for these crudes, Southern California is relatively proximate and has refineries configured to process heavy sour crudes. Rail transportation costs from Alberta to California may thus be low enough to make the delivered cost of tar sands crudes attractive for Southern California refineries. Thus, the most likely crude that the Project will import by rail is one of the tar sands crudes.

2. The Air Impacts From Refining These Crudes Are Likely to Be Significant

The failure to disclose the potential import of tar sands crudes is a significant omission in the Application Review. This substance is fundamentally different from conventional crude oil, and the emissions from handling this material are large and significant. This new crude supply could pose serious environmental and community hazards which must be disclosed and evaluated in an EIR.

---

[42] *See* Sandy Fielden, *Crude Loves Rock'n'Rail – West Coast Destinations*, RBN Energy (Apr. 10, 2013), *available at* https://rbnenergy.com/crude-loves-rock-n-rail-west-coast-destinations.

[43] Cenovus Energy, Western Canadian Select (WCS) Fact Sheet, *available at* http://www.cenovus.com/operations/doing-business-with-us/marketing/western-canadian-select-fact-sheet.html; *See also* CrudeMonitor.ca - Canadian Crude Quality Monitoring, *available at* http://www.crudemonitor.ca/crude.php?acr=WCS.

[44] Brent crude is a major trading classification of sweet light crude oil sourced from the North Sea. Brent is the leading global price benchmark for Atlantic basin crude oils and is used to price two thirds of the world's internationally traded crude oil supplies. It contains about 0.37% sulfur and has an API gravity of 38.06. It is traded on the electronic Intercontinental Exchange, known as ICE. *See* Wikipedia, *Brent Crude*, *http://en.wikipedia.org/wiki/Brent_Crude*.

a. An Analysis of the Quality of the Crude Slate to be Transported is Crucial to Determining the Downstream Air Impacts from this Project

The air quality impacts of refining dirtier crudes such as tar sands depends on the chemical and physical composition of the refinery slate with tar sands crude compared to the current slate. This Project could increase the heavy, sour tar sands crude by a substantial amount, bringing in large quantities of crude with a dramatically different chemical composition, which will change the emissions profile and cause significant increases in emissions of some pollutants compared to the emissions from the Refineries' current crude slate.[45] It is therefore imperative that the EIR disclose how much of exactly which types of crude oils would be coming through the pipeline and the maximum amount of each type of crude oil that may be sent to each refinery the Project will service.

Canadian tar sands crudes blended with diluent have the potential to both increase and significantly change the profile of air emissions compared to current crude slates. These changes will be significant. The transport and refining of DilBits could significantly increase emissions of a wider range of pollutants, including but not limited to volatile organic compounds (VOCs); hazardous air pollutants, including benzene and lead; and highly odoriferous sulfur compounds. As discussed below, this additional pollution would degrade ambient air quality, adversely affect the health of workers and residents around the subject facilities, and create public nuisance odors. Further, the high acid levels in these crudes would accelerate corrosion, contributing to equipment failure and increased accidental releases.

The U.S. Geological Survey ("USGS"), for example, reported that "natural bitumen," the source of all Canadian tar sands-derived oils, contains 102 times more copper, 21 times more vanadium, 11 times more sulfur, 6 times more nitrogen, 11 times more nickel, and 5 times more lead than conventional heavy crude oils, such as those currently refined. These pollutants contribute to smog, soot, acid rain, and odors that affect residents nearby.[46]

---

[45] Stratiev, D. et al., *Evaluation of Crude Oil Quality*, Petroleum & Coal, 52(1): Table 1 (2010), *available at* http://www.vurup.sk/sites/vurup.sk/archivedsite/www.vurup.sk/pc/vol52_2010/issue1/pdf/pc_1_2010_stratiev_051.pdf; Brian Hitchon and R.H. Filby, *Geochemical Studies – 1: Trace Elements in Alberta Crude Oils*, *available at* http://www.ags.gov.ab.ca/publications/OFR/PDF/OFR_1983_02.PDF; Jacobs, F.S. and R.H. Filby, *Trace Element Composition of Athabasca Tar Sands and Extracted Bitumens*, Atomic and Nuclear Methods in Fossil Energy Research 49-59 (1982), *available at* http://link.springer.com/book/10.1007/978-1-4684-4133-8/page/1; James G. Speight, The Desulfurization of Heavy Oils and Residua, Marcel Dekker, Inc., p. 13, Tables 1-1, 2-2, 2-3, and 2-4 (1981); James G. Speight, Synthetic Fuels Handbook: Properties, Process, and Performance, McGraw-Hill, Tables A.2, A.3, and A.4 (2008); Pat Swafford, *Evaluating Canadian Crudes in US Gulf Coast Refineries*, Crude Oil Quality Association Meeting (Feb. 11, 2010), *available at* http://www.coqa-inc.org/20100211_Swafford_Crude_Evaluations.pdf.

[46] R.F. Meyer, E.D. Attanasi, and P.A. Freeman, *Heavy Oil and Natural Bitumen Resources in Geological Basins of the World*, U.S. Geological Survey Open-File Report p. 14, Table 1 (2007), *available at* http://pubs.usgs.gov/of/2007/1084/OF2007-1084v1.pdf.

Additionally, many of these chemicals pose a direct health hazard from air emissions. These metals are released in part as air pollution with the balance ending up in the residual petroleum coke waste. Greater amounts of coke are produced by heavier crude oils, such as tar sands crudes, than the current crude slate. The California Air Resources Board has classified lead as a pollutant with no safe threshold level of exposure below which there are no adverse health effects. Thus, just the increase in lead alone from switching to greater use of tar sands crude is a significant impact that has never been discussed or disclosed. Accordingly, crude quality is critical to a thorough evaluation of the impacts of a crude switch.

A good crude assay is essential for comprehensive crude oil evaluation.[47] The type of data required to evaluate emissions would require, at a minimum, the following information:

- Trace elements (As, B, Cd, Cl, Co, Cr, Cu, Hg, Mn, Mo, Ni, Pb, Sb, Se, U, V, Zn)
- Nitrogen (total & basic)
- Sulfur (total, mercaptans, H2S)
- Residue properties (saturates, aromatics, resins)
- Acidity
- Aromatics content
- Asphaltenes (pentane, hexane and heptane insolubles)
- Hydrogen content
- Carbon residue (Ramsbottom, Conradson)
- Distillation yields
- Properties by cut
- Hydrocarbon analysis by gas chromatography

Plains All American is likely to have access to the crude assay or "fingerprint" of the oil, but it was not made available to the public, foreclosing any meaningful public review. The Application Review does not contain any crude assays for the crude that would be imported, or the crude that is currently used by the refineries this Project would supply and would be replaced. Although specific information is lacking, significant impacts can reasonably be expected from considering tar sands crudes in this Project.

The sulfur content of crude oils represents a complex collection of individual chemical compounds such as hydrogen sulfide, mercaptans, thiophene, benzothiophene, methyl sulfonic acid, dimethyl sulfone, thiacyclohexane, etc. Each crude has a different suite of individual sulfur chemicals. The impacts of "sulfur" depend upon the specific sulfur chemicals and their relative concentrations, not on the range of total sulfur expressed as a percent of the crude oil by weight. Although a range in the total sulfur content of rail-imported crude and the current crude slate

---

[47] Canadian Crude Quality Technical Association, *Canadian Crude Oil Quality Past, Present and Future Direction*, p. 8 (Feb. 7, 2012) ("Need more than sulfur and gravity to determine the "acceptability and valuation" of crude oil in a refinery. The crude oil's hydrocarbon footprint and contaminants determine the value of crudes."), *available at* http://www.ccqta.com/files/CCQTA%20Crude%20Quality%20Presentation%20to%20the%20CHOA%20-%20Feb%207,%202012.pdf.

may appear similar, even a small increase in total sulfur content can have profound impacts, and the composition of sulfur species also matters. A minor increase in sulfur content was reported by the Federal Chemical Safety Board as a major contributing factor in the August, 2012 catastrophic fire at the Chevron Refinery in Richmond, California.

In particular, it is important to consider the lighter sulfur compounds such as mercaptans and disulfides that may not significantly increase the overall weight percent sulfur in the crude slate, but can lead to impacts, such as aggressive sulfidation corrosion, which can lead to accidental releases.[48] Specific sulfur compounds will also determine which compounds will be emitted from storage tanks and fugitive components, some of which could result in significant odor impacts, e.g., mercaptans. Thus, regardless of what crude might be brought in through the pipeline, there are potential significant environmental impacts that are due to very specific characteristics of that oil.

The specific chemicals in crude oil also determine which ones will be volatile and lost through equipment leaks and outgassed from tanks, which ones will be difficult to remove in hydrotreaters and other refining processes (thus determining how much hydrogen and energy must be expended to remove them), which ones will cause malodors, and which ones might aggravate corrosion, leading to accidental releases. Information about the crude slate must be disclosed and analyzed in a full EIR.

b. Heavier Crudes Require More Downstream Processing

Canadian tar sands bitumen is distinguished from conventional petroleum by the small concentration of low molecular weight hydrocarbons and the abundance of high molecular weight polymeric material.[49] Crudes derived from Canadian tar sands bitumen—DilBits, Synthetic crude oils (SCOs) and the combination of the two (SynBits)—are heavier, i.e., have larger, more complex molecules such as asphaltenes,[50] some with molecular weights above 15,000.[51] They generally have higher amounts of coke-forming precursors; larger amounts of contaminants (sulfur, nitrogen, nickel, vanadium) that require more intense processing to remove; and are deficient in hydrogen, compared to other heavy crudes.

Thus, to convert them into the same refined products requires more utilities—electricity, water, heat, and hydrogen. This requires that more fuel be burned in most every fired source at

---

[48] Jim McLaughlin, *Changing Your Crude Slate*, Becht News (May 24, 2013), *available at* http://becht.com/news/becht-news/.

[49] O.P. Strausz, *The Chemistry of the Alberta Oil Sand Bitumen*, *available at* http://web.anl.gov/PCS/acsfuel/preprint%20archive/Files/22_3_MONTREAL_06-77_0171.pdf.

[50] Asphaltenes are nonvolatile fractions of petroleum that contain the highest proportions of heteroatoms, i.e., sulfur, nitrogen, oxygen. The asphaltene fraction is that portion of material that is precipitated when a large excess of a low-boiling liquid hydrocarbon such as pentane is added. They are dark brown to black amorphous solids that do not melt prior to decomposition and are soluble in benzene and aromatic naphthas.

[51] O.P. Strausz, *The Chemistry of the Alberta Oil Sand Bitumen*, *available at* http://web.anl.gov/PCS/acsfuel/preprint%20archive/Files/22_3_MONTREAL_06-77_0171.pdf.

the refinery and that more water be circulated in heat exchangers and cooling towers. Further, this requires more fuel to be burned in any supporting off-site facilities, such as power plants that may supply electricity or Steam-Methane Reforming Plants that may supply hydrogen. Under CEQA, these indirect increases in emissions caused by a project must be included in the impact analysis. The increases in fuel consumption also releases increased amounts of NO_x, SO_2, VOCs, CO, PM10, PM2.5, and HAPs as well as greenhouse gas emissions (GHG). The Air District must evaluate crude composition on the resulting indirect emissions from generating increased amount of these utilities.

i. Higher Concentrations of Asphaltenes and Resins

The severity (e.g., temperature, amount of catalyst, hydrogen) of hydrotreating crude oil in a refinery depends on the type of compound a contaminant is bound up in. Lower molecular weight compounds are easier to remove. The difficulty of removal increases in this order: paraffins, naphthenes, and aromatics.[52] Most of the contaminants of concern in tar sands crudes are bound up in high molecular weight aromatic compounds such as asphaltenes that are difficult to remove, meaning more heat, hydrogen, and catalyst are required to convert them to lower molecular weight blend stocks. Some tar sands-derived vacuum gas oils (VGOs), for example, contain no paraffins of any kind. All of the molecules are aromatics, naphthenes, or sulfur species that require large amounts of hydrogen to hydrotreat, compared to other heavy crudes.[53]

Asphaltenes and resins generally occur in tar sands bitumens in much higher amounts than in other heavy crudes. They are the nonvolatile fractions of petroleum and contain the highest proportions of sulfur, nitrogen, and oxygen.[54] They have a marked effect on refining and result in the deposition of high amounts of coke during thermal processing in the coker. They also form layers of coke in hydrotreating reactors, requiring increased heat input, leading to localized or even general overheating and thus even more coke deposition. This seriously affects catalyst activity resulting in a marked decrease in the rate of desulfurization. They also require more intense processing in the coker required to break them down into lighter products. These factors require increases in steam and heat input, both of which generate combustion emissions—NO_x, SO_x, CO, VOCs, PM10, and PM2.5.

---

[52] James H. Gary, Glenn E. Handwerk, and Mark J. Kaiser, Petroleum Refining: Technology and Economics, 5th Ed., CRC Press, p. 200 (2007); A.M. Aitani, *Processes to Enhance Refinery-Hydrogen Production*, Int. J. Hydrogen Energy, 21(4): 267-271 (1996).

[53] See the discussion of hydrotreating and hydrocracking of Athabasca tar sands cuts in Gary R. Brierley, Visnja A. Gembicki, and Tim M. Cowan, *Changing Refinery Configurations for Heavy and Synthetic Crude Processing*, pp. 11-17 (2006) *available at* https://www.edockets.state.mn.us/EFiling/edockets/searchDocuments.do?method=showPoup&documentId=%7BA07DE342-E9B1-402A-83F7-36B18DC3DD05%7D&documentTitle=5639138.

[54] James G. Speight, The Desulfurization of Heavy Oils and Residua, Marcel Dekker, Inc., p. 13, Tables 1-1, 2-2, 2-3, and 2-4 (1981); and James G. Speight, Synthetic Fuels Handbook: Properties, Process, and Performance, McGraw-Hill, Tables A.2, A.3, and A.4 (2008).

Further, if the crude includes a synthetic crude, SCO, for example, the material has been previously hydrotreated. Thus, the remaining contaminants (e.g., sulfur, nitrogen), while present in small amounts, are much more difficult to remove (due to their chemical form, buried in complex aromatics), requiring higher temperatures, more catalyst, and more hydrogen.[55]

The higher amounts of asphaltenes and resins generate more heavy feedstocks that require more severe processing than lighter feedstocks. The coker, for example, makes more coker distillate and gas oil that must be hydrotreated, compared to conventional heavy crudes. Similarly, the Crude Unit makes more atmospheric and vacuum gas oils that must be hydrotreated.[56] This increases emissions from these units, including fugitive VOC emissions from equipment leaks and combustion emissions from burning more fuel.

ii. Higher Hydrogen Addition During Refining

Tar sands crudes are hydrogen deficient compared to heavy and conventional crude oils and thus require substantial hydrogen addition during refining, beyond that required to remove contaminants (sulfur, nitrogen, metals). This again means more combustion emissions from burning more fuel.

iii. Higher Concentrations of Catalyst Contaminant

Tar sands bitumens contain about 1.5 times more sulfur, nitrogen, oxygen, nickel and vanadium than typical heavy crudes.[57] Thus, much more hydrogen per barrel of feed and higher temperatures would be required to remove the larger amounts of these chemicals. These impurities are removed by reacting hydrogen with the crude fractions over a fixed catalyst bed at elevated temperature. The oil feed is mixed with substantial quantities of hydrogen either before or after it is preheated, generally to 500 F to 800 F.[58]

---

[55] Gary R. Brierley et al., *Changing Refinery Configuration for Heavy and Synthetic Crude Processing*, p. 8 (2006), *available at* https://www.edockets.state.mn.us/EFiling/edockets/searchDocuments.do?method=showPoup&documentId=%7BA07DE342-E9B1-402A-83F7-36B18DC3DD05%7D&documentTitle=5639138 ("The sulfur and nitrogen species left in the kerosene and diesel cuts are the most refractory, difficult-to-treat species that could not be removed in the upgrader's relatively high-pressure hydrotreaters."); Turini et al., *Processing Heavy Crudes in Existing Refineries*, p. 4 (2011); *available at* http://www.aiche-fpd.org/listing/112.pdf.

[56] Turini et al. at 9.

[57] R.F. Meyer, E.D. Attanasi, and P.A. Freeman, *Heavy Oil and Natural Bitumen Resources in Geological Basins of the World*, U.S. Geological Survey Open-File Report 2007-1084, p. 14, Table 1 (2007) *available at* http://pubs.usgs.gov/of/2007/1084/OF2007-1084v1.pdf.

[58] James H. Gary, Glenn E. Handwerk, and Mark J. Kaiser, Petroleum Refining: Technology and Economics, 5th Ed., CRC Press, p. 200 (2007); A.M. Aitani, Processes to Enhance Refinery-Hydrogen Production, Int. J. Hydrogen Energy, 21(4): 267-271 (1996).

Canadian tar sands crudes generally have higher nitrogen content, 3,000 to >6,000 ppm[59] and specifically higher organic nitrogen content, particularly in the naphtha range, than other heavy crudes.[60] This nitrogen is mostly bound up in complex aromatic compounds that require a lot of hydrogen to remove. This affects emissions in five ways.

First, additional hydrotreating is required to remove them, which increases hydrogen and energy input. Second, they deactivate the cracking catalysts, which requires more energy and hence more emissions to achieve the same end result. Third, they increase the nitrogen content of the fuel gas fired in combustion sources, which increases NO_x emissions from all fired sources that use refinery fuel gas. Fourth, nitrogen in tar sands crudes is present in higher molecular weight compounds than in other heavy crudes and thus requires more hydrogen and energy to remove. Fifth, some of this nitrogen will be converted to ammonia and other chemically bound nitrogen compounds, such as pyridines and pyrroles. These become part of the fuel gas and could increase NO_x from fired sources. They further may be routed to the flares, where they would increase NO_x emissions.

These types of chemical characteristics of the crude oil that the Project proposes to bring through Bakersfield and into major Southern California refineries must be fully evaluated and mitigated in the EIR.

iv. Increased Petroleum Coke By-product

The proposed Project could increase coke production at refineries and related coke dust fugitive emissions, if the average crude slates become heavier, leading to increased toxic air emissions. Lead, for example, can be present in very high concentrations in fugitive dusts from coke storage, handling, and export, especially when heavy sour crudes are being processed. In addition to lead, petroleum coke contains many other contaminants.[61] The California Air Resources Board (CARB) has concluded there is no safe threshold level of exposure for lead; any amount poses significant health risks. Thus, the potential cumulative increase in coke fugitive emissions that would be facilitated by this Project would be a significant public health impact. There has been no demonstration that the increase in lead and heavy metal-laden coke dust, that could reasonably be expected to result from this Project, could comply with current standards, or that such compliance would mitigate lead health impacts, given CARB's zero threshold finding, or that other contaminants in coke dust would not pose a significant risk to public health.

---

[59] Murray R. Gray, Tutorial on Upgrading of Oilsands Bitumen, University of Alberta, *available at* http://www.ualberta.ca/~gray/Links%20&%20Docs/Web%20Upgrading%20Tutorial.pdf.

[60] James G. Speight, Synthetic Fuels Handbook: Properties, Process, and Performance, McGraw-Hill, Appendix A (2008).

[61] Tesoro, Material Safety Data Sheet for Petroleum Coke, *available at* http://www.tsocorp.com/stellent/groups/corpcomm/documents/tsocorp_documents/msdspetrocoke.pdf.

c. Increased Air Emissions from Diluent

The mixture of diluent and bitumen does not behave the same as a conventional crude, as the distribution of hydrocarbons is very different. The blended lighter diluent evaporates easily when exposed to ambient conditions, leaving behind the heavy ends, the vacuum gas oil (VGO) and residuum.[62] Thus, when a DilBit is released accidentally, it will generally create a difficult to cleanup spill as the heavier bitumen will be left behind.[63] Further, in a storage tank, the diluent also can be rapidly evaporated and emitted through tank openings.

DilBits are sometimes referred to as "dumbell" or "barbell" crudes as the majority of the diluent is C_5 to C_{12} and the majority of the bitumen is C_{30}+ boiling range material, with very little in the more desirable middle range.[64] Thus, DilBits yield very little middle distillate fuels, such as diesel, heating oil, kerosene, and jet fuel and much more coke, than other heavy crudes. A typical DilBit, for example, will have 15% to 20% by weight light material, basically the added diluent, 10% to 15% middle distillate, and the balance, >75% is heavy residual material (vacuum gas oil and residue) exiting the distillation column. These characteristics show major differences between DilBits and the crudes currently refined in Southern California.[65]

The large amount of light material in DilBits is very volatile and can be emitted to the atmosphere from storage tanks and equipment leaks of fugitive components (pumps, compressors, valves, fittings) in much larger amounts than other heavy crudes that it would replace. It is unlikely that any other heavy crudes processed at Southern California refineries currently arrive with diluent, since Energy Information Administration crude import data do not identify any crudes that are blended with diluent. Thus, the use of diluent to transport tar sands crudes is likely an important difference between the current heavy crude slates processed at Southern California refineries and the tar sands crudes that could replace them. This diluent will have impacts during railcar unloading and storage, as well as at many processing units within the refineries downstream.

---

[62] The residuum is the residue obtained from the oil after nondestructive distillation has removed all of the volatile materials. Residua are black, viscous materials. They may be liquid at room temperature (from the atmospheric distillation tower) or almost solid (generally vacuum residua), depending upon the nature of the crude oil.

[63] Lisa Song, *A Dilbit Primer: How It's Different from Conventional Oil*, Inside Climate News, *available at* http://insideclimatenews.org/news/20120626/dilbit-primer-diluted-bitumen-conventional-oil-tar-sands-Alberta-Kalamazoo-Keystone-XL-Enbridge?page=show.

[64] Gary R. Brierley et al., *Changing Refinery Configuration for Heavy and Synthetic Crude Processing* (2006), *available at* https://www.edockets.state.mn.us/EFiling/edockets/searchDocuments.do?method=showPoup&documentId=%7BA07DE342-E9B1-402A-83F7-36B18DC3DD05%7D&documentTitle=5639138.

[65] *Compare* D. Stratiev et al., *Evaluation of Crude Oil Quality*, Petroleum & Coal, 52(1): Table 1 (2010), *available at* http://www.vurup.sk/sites/vurup.sk/archivedsite/www.vurup.sk/pc/vol52_2010/issue1/pdf/pc_1_2010_stratiev_051.pdf, *with* DilBit crude data on http://www.crudemonitor.ca.

The diluent is a low molecular weight organic material with a high vapor pressure that contains high levels of VOCs, sulfur compounds, and HAPs. These would be emitted during unloading and present in emissions from the crude tank(s) and fugitive components from its entry into the refineries with the crude until it is recovered and marketed, or at least between the desalter and downstream units where some of it is recovered. The presence of diluent would increase the vapor pressure of the crude, substantially increasing VOC and HAPs emissions from tanks and fugitive component leaks compared to those from displaced heavy crudes not blended with diluent. The Air District must disclose the potential presence of diluent and attempt to estimate these diluent-derived emissions.

The composition of some typical diluents is reported on the Canadian crude website, crudemonitor.ca.[66] The specific diluents that could be used in crudes brought in by the Project are unknown. However, the Canadian Crude Monitor information indicates that several different types of diluents contain very high concentrations, based on 5-year averages, of the hazardous air pollutants benzene (5,200 ppm to 9,800 ppm); toluene (10,300 ppm to 25,300 ppm); ethyl benzene (900 ppm to 2,900 ppm); and xylenes (4,600 ppm to 23,900 ppm).

The sum of these four compounds is known as "BTEX" or benzene-toluene-ethylbenzene-xylene. The BTEX in diluent ranges from 27,000 ppm to 60,900 ppm. The BTEX in DilBits ranges from 8,000 ppm, to 12,400 ppm.[67] Similarly, the BTEX in synthetic crude oils (SCOs) ranges from 6,100 ppm to 14,100 ppm.[68] The Air District must evaluate these high

---

[66] Blend (CRW) Fact Sheet, *available at* http://www.crudemonitor.ca/condensate.php?acr=CRW; Fort Saskatchewan Condensate (CFT) Fact Sheet, *available at* http://www.crudemonitor.ca/condensate.php?acr=CFT; Peace Condensate (CPR) Fact Sheet, *available at* http://www.crudemonitor.ca/condensate.php?acr=CPR; Pembina Condensate (CPM) Fact Sheet, *available at* http://www.crudemonitor.ca/condensate.php?acr=CPM; Rangeland Condensate (CRL) Fact Sheet, *available at* http://www.crudemonitor.ca/condensate.php?acr=CRL; Southern Lights Diluent (SLD) Fact Sheet, *available at* http://www.crudemonitor.ca/condensate.php?acr=SLD

[67] DilBits: Access Western Blend (AWB) Fact Sheet, *available at* http://www.crudemonitor.ca/crude.php?acr=AWB; Borealis Heavy Blend (BHB) Fact Sheet, *available at* http://www.crudemonitor.ca/crude.php?acr=BHB; Christina Dilbit Blend (CDB) Fact Sheet, *available at* http://www.crudemonitor.ca/crude.php?acr=CDB; Cold Lake (CL) Fact Sheet, *available at* http://www.crudemonitor.ca/crude.php?acr=CL; Peace River Heavy (PH) Fact Sheet, *available at* http://www.crudemonitor.ca/crude.php?acr=PH; Seal Heavy (SH) Fact Sheet, *available at* http://www.crudemonitor.ca/crude.php?acr=SH; Statoil Cheecham Blend (SCB) Fact Sheet, *available at* http://www.crudemonitor.ca/crude.php?acr=SCB; Wabasca Heavy (WH) Fact Sheet, *available at* http://www.crudemonitor.ca/crude.php?acr=WH; Western Canadian Select (WCS) Fact Sheet, *available at* http://www.crudemonitor.ca/crude.php?acr=WCS; Albian Heavy Synthetic (AHS) (DilSynBit) Fact Sheet, *available at* http://www.crudemonitor.ca/crude.php?acr=AHS

[68] SCOs: CNRL Light Sweet Synthetic (CNS) Fact Sheet, *available at* http://www.crudemonitor.ca/crude.php?acr=CNS; Husky Synthetic Blend (HSB) Fact Sheet, *available at* http://www.crudemonitor.ca/crude.php?acr=HSB; Long Lake Light Synthetic (PSC) Fact Sheet, *available at* http://www.crudemonitor.ca/crude.php?acr=PSC; Premium

concentrations. These high levels could result in significant worker and community public health impacts.

Although crude oil contains many different chemicals that are carcinogens, the cancer risk of exposure to crudes transported by the Project was not considered. Information on diluents from the Crude Monitor also indicates elevated concentrations of volatile mercaptans (9.9 to 103.5 ppm), which are highly odiferous and toxic compounds that will create odor and nuisance problems in the vicinity of the unloading area, crude storage tanks and supporting fugitive components. Mercaptans can be detected at concentrations substantially lower than will be present in emissions from the crude tanks and fugitive emissions from the unloading rack and related components, including pumps, valves, flanges, and connectors.[69]

Thus, unloading, storing, handling and refining bitumens mixed with diluent could emit VOCs, HAPs, and malodorous sulfur compounds, not found in comparable levels in conventional crudes, depending upon the DilBit or shale crude source. There are no restrictions on the crudes, diluent source or their compositions nor any requirements to monitor emissions from tanks and leaking equipment where DilBit-blended and other light crudes would be handled. As the market has experienced shortages of diluents, any material with a suitable thinning ability could be used, which could contain still other hazardous components, with the potential for even greater air quality and health impacts than discussed here.

d. Health Impacts of Chemical Constituents in Unconventional Crude Oils

Heavy bitumen tar sands and diluents are composed of hundreds of chemicals with known health impacts. Below is a summary of the health impacts of some of those hazardous compounds associated with refining dirtier crude oils. Many of these compounds present significant hazards to human health at varying levels of exposure.

2. Hydrogen Sulfide is a flammable and colorless gas that smells like rotten eggs. It is a broad spectrum poison that can be lethal at high concentrations. At low concentrations, hydrogen sulfide can cause irritation to the eyes, nose and throat. Additionally, exposure may result in incoordination, memory loss, hallucinations, personality changes, loss of sense of smell, cough, and shortness of breath; people with asthma may experience difficulty breathing. In occupational settings, workers have died from exposure to high

---

Albian Synthetic (PAS) Fact Sheet, *available at* http://www.crudemonitor.ca/crude.php?acr=PAS; Shell Synthetic Light (SSX) Fact Sheet, *available at* http://www.crudemonitor.ca/crude.php?acr=SSX; Suncor Synthetic A (OSA) Fact Sheet, *available at* http://www.crudemonitor.ca/crude.php?acr=OSA; Syncrude Synthetic (SYN) Fact Sheet, *available at* http://www.crudemonitor.ca/crude.php?acr=SYN

[69] American Industrial Hygiene Association, Odor Thresholds for Chemicals with Established Occupational Health Standards (1989); American Petroleum Institute, Manual on Disposal of Refinery Wastes, Volume on Atmospheric Emissions, Chapter 16 – Odors, Table 16-1 (1976).

levels of hydrogen sulfide.[70]

3. Mercaptans[71] are a large class of toxic compounds that generally have a strong and unpleasant odor even at very low concentrations. They are added in small amounts to natural gas to help detect gas leaks. Because they are extremely flammable, mercaptans present fire and explosion hazards in industrial processes. Exposure to mercaptans may cause irritation of the skin, eyes, and upper respiratory tract. All mercaptans negatively affect the central nervous system. Workers accidentally exposed to high levels of mercaptans experienced muscular weakness, nausea, dizziness, stupor, and unconsciousness (narcosis).[72]

4. Thiophene[73] is a highly flammable and hazardous component of petroleum.[74] Exposure to thiophene results in adverse effects to the skin, eyes, nose and throat.[75] Workers breathing thiophene vapors generated from normal handling of the material may experience respiratory irritation, dizziness, fatigue, unconsciousness, loss of reflexes, lack of coordination, and vertigo. Long-term exposure to thiophene may damage the liver, or produce asthma-like symptoms which may continue for months or years after exposure to the chemical stops.[76]

5. Benzothiophene[77] is a solid compound with an odor similar to naphthalene (mothballs). It is found in petroleum, and used primarily in industries such as pharmaceuticals and in research.[78] A person exposed to benzothiophene may experience irritation of the eyes,

---

[70] Agency for Toxic Substances and Disease Registry, *Toxicological Profile for Hydrogen Sulfide* (July 2006), *available at* http://www.atsdr.cdc.gov/toxprofiles/tp.asp?id=389&tid=67.

[71] Mercaptans are also commonly known as thiols, thioalcohols, or sulphydrates.

[72] Stellman, Jeanne Mager, Encyclopedia of Occupational Health and Safety, vol. 4, Geneva: International Labor Office (1998), *available at* http://getebook.org/?p=164205.

[73] Thiophene is also called divinylene sulphide, thiacyclopentadiene, and thiofuran

[74] National Library of Medicine Hazardous Substances Databank, *Thiophene*, *available at* http://toxnet.nlm.nih.gov/cgi-bin/sis/htmlgen?HSDB.

[75] New Jersey Department of Health and Senior Services, *Thiophene Hazardous Substance Fact Sheet*, (Dec. 2000), *available at* http://nj.gov/health/eoh/rtkweb/documents/fs/1851.pdf.

[76] Santa Cruz Biotechnology, Inc., *Thiophene Material Safety Data Sheet* (Mar. 2009), *available at* http://datasheets.scbt.com/sc-251237.pdf.

[77] Benzothiophene is also known as thianaphthene, benzo(b)thiophene, 1-benzothiophene, 1-thiaindene, 2,3-benzothiophene, benzothiofuran, benzothiophen, thianaphtene, thianaphthen, thianaphthene, and thionaphthene.

[78] Merck Index, *Thianaphthene Structure Details*, *available at* http://themerckindex.cambridgesoft.com/themerckindex/Forms/Search/ContentArea/ChemBioVizSearch.aspx?FormGroupId=200000&AppName=THEMERCKINDEX&AllowFullSearch=true&KeepRecordCountSynchronized=false&SearchCriteriaId=5&SearchCriteriaValue=95-15-8&CurrentIndex=0.

skin, or respiratory tract.[79]

6. Methylsulfonic acid[80] is used in the process of refining petroleum. The general population is exposed through breathing outdoor air.[81] Methylsulfonic acid is harmful to humans and can irritate or burn the eyes, skin, and mucous membranes.[82] Inhaling methylsulfonic acid vapor is extremely destructive to the tissue of the mucous membranes and upper respiratory tract.[83]

7. Dimethyl sulfone[84] is an odorless, combustible liquid and vapor. If inhaled as a dust, it may cause respiratory irritation. It may also cause irritation to the eyes.[85]

8. Thiacyclohexane[86] is a sulfur containing component of crude oil. It is highly flammable, and exists in both liquid and vapor form. Exposure to thiacyclohexane may cause skin or eye irritation. At present, the short and long-term toxicity of this compound is not fully understood.[87]

9. Pentane[88] is a VOC commonly found in natural gas and crude oil. Aside from the fact that is highly flammable—mixtures of pentane and air can be explosive—pentane has been identified as a central nervous system (CNS) depressant.[89] Exposure to pentane

---

[79] National Institute of Health Haz-Map Database, *Benzothiophene Haz-Map Category Details*, *available at* http://hazmap.nlm.nih.gov/category-details?id=12230&table=copytblagents.

[80] Methylsulfonic acid is also called methanesulfonic acid.

[81] National Library of Medicine Hazardous Substances Data Bank, *Methanesulfonic Acid*, *available at* http://toxnet.nlm.nih.gov/cgi-bin/sis/search/a?dbs+hsdb:@term+@DOCNO+5004.

[82] Occupational Safety and Health Administration, *Methanesulfonic Acid Chemical Sampling Information*, *available at* http://www.osha.gov/dts/chemicalsampling/data/CH_250710.html.

[83] National Library of Medicine Hazardous Substances Data Bank, *Methanesulfonic Acid*,, *available at* http://toxnet.nlm.nih.gov/cgi-bin/sis/search/a?dbs+hsdb:@term+@DOCNO+5004.

[84] Dimethyl sulfone is also known as methyl sulfone, methylsulfonylmethane (MSM), sulfonylbismethane, methane, sulfonylbis-, and dimethyl sulphone. It can be used as a food supplement and medicine.

[85] Gaylord Chemical Corporation, *Dimethyl Sulfone Material Safety Data Sheet* (Aug. 20, 2004), *available at* http://www.clean.cise.columbia.edu/msds/dimethylsulfoxide.pdf.

[86] Synonyms include thiapyran, tetrahydro- (4CI), thiopyran, tetrahydro- (6CI), pentamethylenesulfide, penthiophane, tetrahydro-2H thiopyran, tetrahydrothiapyran, tetrahydrothiopyran, thiacyclohexane, thiane. Search for this compound using thiane, or its CAS number 1613-51-0.

[87] Alfa Aesar, *Tetrahydrothiopyran Material Safety Data Sheet* (June 2011), *available at* http://www.msds.com/servlet/B2BDocumentDisplay?document_version_nri=5175301&manuf_nri=704&manuf_name=&supplier_nri=704&page_number=1&search_source=centraldb&CLIENT_session_key=A736334_Kitty89&CLIENT_language=2.

[88] Also known as n-Pentane, normal-Pentane.

[89] National Library of Medicine Hazardous Substances Data Bank, *Pentane*, available at http://toxnet.nlm.nih.gov/cgi-bin/sis/htmlgen?HSDB.

vapors can cause irritation to the eyes, skin, and respiratory system, as well as, nausea, vomiting, headaches, and dizziness.[90,91] Chronic or long-term exposure can result in anoxia, or a severe lack of oxygen to body organs and tissues.[92] Exposure to high levels of pentane can be deadly.[93]

10. Naphtha[94] is a highly flammable, toxic organic solvent distilled from petroleum with a wide range of industrial and commercial uses. Exposure to naphtha can cause headaches, dizziness, nausea, and vomiting.[95] Naphtha vapor is a central nervous system depressant as well as an irritant of the mucous membranes and the respiratory tract—exposure to high concentrations can cause fatigue, lightheadedness, and loss of consciousness.[96] Female workers exposed to naphtha experienced reproductive impacts in the form of disturbances in menstrual cycles, abnormal uterine bleeding, and a disturbance of the ovarian function.[97] Long-term exposure may cause damage to the liver, kidneys, blood, nervous system, and skin.[98] Naphtha contains benzene which is a known carcinogen. [99]

11. Polycyclic aromatic hydrocarbons (PAHs) are a group of over 100 different chemicals that are formed during incomplete combustion.[100] Infants and children are especially

---

[90] CDC, National Institute for Occupational Safety and Health (NIOSH), *CDC - NIOSH Pocket Guide to Chemical Hazards - n-Pentane* (Nov. 2010), *available at* http://www.cdc.gov/niosh/npg/npgd0486.html.

[91] CDC, NIOSH, *n-Pentane International Chemical Safety Cards* (Oct. 1999), *available at* http://www.cdc.gov/niosh/ipcsneng/neng0534.html.

[92] National Library of Medicine Hazardous Substances Data Bank, *Pentane*, available at http://toxnet.nlm.nih.gov/cgi-bin/sis/htmlgen?HSDB.

[93] CDC, NIOSH, *n-Pentane International Chemical Safety Cards* (Oct. 1999), *available at* http://www.cdc.gov/niosh/ipcsneng/neng0534.html.

[94] Like pentane, naphtha may be used as a diluent in heavy crude oils.

[95] New Jersey Department of Health and Senior Services, *Naphtha Hazardous Substance Fact Sheet* (April 2007), *available at* http://nj.gov/health/eoh/rtkweb/documents/fs/0518.pdf.

[96] National Library of Medicine Hazardous Substances Data Bank, *Naphtha*, *available at* http://toxnet.nlm.nih.gov/cgi-bin/sis/htmlgen?HSDB.

[97] *Id.*

[98] Tesoro, *Naphtha Material Safety Data Sheet* (June 27, 2011), *available at* http://www.collectioncare.org/MSDS/naphthamsds.pdf.

[99] New Jersey Department of Health and Senior Services, *Naphtha Hazardous Substance Fact Sheet* (April 2007), *available at* http://nj.gov/health/eoh/rtkweb/documents/fs/0518.pdf.

[100] Salmon A.G. and Meehan T., *Potential Impact of Environmental Exposures to Polycyclic Organic Material (POM) on Children's Health*, California Office of Environmental Health Hazard Assessment, *available at* http://www.oehha.ca.gov/public_info/public/kids/pdf/PAHs%20on%20Children's%20Health.pdf; Agency for Toxic Substances and Disease Registry, *Public Health Statement for Polycyclic Aromatic Hydrocarbons (PAHs)* (Aug. 1995), *available at* http://www.atsdr.cdc.gov/PHS/PHS.asp?id=120&tid=25; Frederica Perera, et al., *DNA Damage from Polycyclic Aromatic Hydrocarbons Measured by Benzo[a]pyrene-DNA Adducts in Mothers and Newborns from Northern Manhattan, The World Trade Center Area, Poland, and China*, Cancer Epidemiol Biomarkers Prev, 14(3):709-14 (2005).

susceptible to the hazards of PAHs, a class of known human mutagens, carcinogens, and developmental toxicants found in diesel exhaust.[101] Greater lifetime cancer risks result from exposure to carcinogens at a young age. These substances are known to cross the placenta to harm the unborn fetus, contributing to fetal mortality, increased cancer risk and birth defects.[102] Prenatal exposure to PAHs may also be a risk factor for the early development of asthma-related symptoms and can adversely affect children's cognitive development, with implications for diminished school performance.[103] Exposure of children to PAHs at levels measured in polluted areas can also adversely affect IQ.[104]

12. Lead is a well-known toxic heavy metal with diverse and severe health impacts.[105] In particular, lead is associated with neurological, hematological, and immune effects on children, and hematological, cardiovascular and renal effects on adults. Children are particularly sensitive to the effects of lead, including sensory, motor, cognitive and behavioral impacts. Cognitive effects of special concern include decrements in IQ scores and academic achievement, as well as attention deficit problems. Children in poverty and black, non-Hispanic children face higher exposures to lead and are consequently more susceptible to lead's health impacts.[106] Reproductive effects, such as decreased sperm count in men and spontaneous abortions in women, have been associated with lead exposure. The U.S. Environmental Protection Agency (EPA) has classified lead as a probable human carcinogen.[107]

---

[101] Salmon, A.G. and T. Meehan, *Potential Impact of Environmental Exposures to Polycyclic Organic Material (POM) on Children's Health*, California Office of Environmental Health Hazard Assessment, *available at* http://www.oehha.ca.gov/public_info/public/kids/pdf/PAHs%20on%20Children's%20Health.pdf; Agency for Toxic Substances and Disease Registry, *Public Health Statement for Polycyclic Aromatic Hydrocarbons (PAHs)* (Aug. 1995), *available at* http://www.atsdr.cdc.gov/PHS/PHS.asp?id=120&tid=25.

[102] Frederica Perera, et al., *DNA Damage from Polycyclic Aromatic Hydrocarbons Measured by Benzo[a]pyrene-DNA Adducts in Mothers and Newborns from Northern Manhattan, The World Trade Center Area, Poland, and China*, Cancer Epidemiol Biomarkers Prev 14(3):709-14 (2005).

[103] Frederica Perera et al., *Effects of Transplacental Exposure to Environmental Pollutants on Birth Outcomes in a Multiethnic Population*, Environmental Health Perspectives, 111(2): 201-205 (2003); Frederica Perera et al., *Effect of Prenatal Exposure to Airborne Polycyclic Aromatic Hydrocarbons on Neurodevelopment in the First 3 Years of Life among Inner-City Children*, Environmental Health Perspectives, 114(8): 1287-1292 (2006).

[104] Frederica Perera et al., *Prenatal Airborne Polycyclic Aromatic Hydrocarbon Exposure and Child IQ at Age 5 Years*, Pediatrics 124(2): e195-e202 (2009).

[105] *See, e.g.*, National Ambient Air Quality Standards for Lead, 73 Fed. Reg. 66,964, 66,975-76 (Nov. 12, 2008).

[106] *Id.*

[107] *Id.*

13. Nickel is associated with chronic dermatitis, respiratory impacts and potentially also reproductive impacts.[108] The EPA has classified nickel refinery subsulfide as a Group A, human carcinogen and nickel carbonyl as a Group B2, probable human carcinogen.

BTEX: The following compounds (benzene, toluene, ethylbenzene, and xylene) are some of the VOCs found in petroleum.

14. Benzene is a common component of crude oil and gasoline, and a widespread environmental pollutant resulting mainly from refinery activity.[109] People are primarily exposed to benzene through breathing contaminated air. Benzene is a known carcinogen; long term exposure can cause leukemia.[110] Inhalation of high doses of benzene may impact the central nervous system leading to drowsiness, dizziness, irregular heartbeat, nausea, headaches, and depression.[111] Female workers experiencing high exposure levels over the course of many months experienced reproductive impacts, such as a decrease in the size of their ovaries. In animal studies, breathing benzene was associated with developmental effects such as low birth weight, delayed bone formation, and bone marrow damage.[112]

15. Toluene is a volatile organic compound (VOC) used widely in industry as a raw material and as a solvent. Toluene concentrations are highest in areas of heavy traffic, near gas stations and petroleum refineries. According to California's list of chemicals known to cause cancer or reproductive toxicity, toluene is listed as a developmental toxicant.[113] Similar to many organic solvents, toluene acts as a respiratory tract irritant, particularly at high air concentrations.[114] For this reason, it can be more harmful to people with asthma. A ubiquitous air pollutant, exposure to toluene constitutes a serious health concern as it has negative impacts on the central nervous system. Exposure to toluene can cause headaches, impaired reasoning, memory loss, nausea, impaired speech, hearing, and vision, amongst other health effects.[115] Long term exposure may damage

---

[108] Agency for Toxic Substances and Disease Registry, *Public Health Statement for Nickel*, *available at* http://www.atsdr.cdc.gov/.

[109] Agency for Toxic Substances and Disease Registry, *Toxicological Profile for Benzene* (Aug 2007).

[110] California EPA, Office of Environmental Health Hazard Assessment, *Chemicals Known to the State to Cause Cancer or Reproductive Toxicity* (May 24, 2013), *available at* http://oehha.ca.gov/prop65/prop65_list/files/P65single052413.pdf.

[111] Agency for Toxic Substances and Disease Registry, *Toxicological Profile for Benzene* (Aug. 2007).

[112] *Id.*

[113] California EPA Office of Environmental Health Hazard Assessment, *Chemicals Known to the State to Cause Cancer or Reproductive Toxicity* (May 24, 2013), *available at* http://oehha.ca.gov/prop65/prop65_list/files/P65single052413.pdf.

[114] Agency for Toxic Substances and Disease Registry, *Toluene Toxicity*: *Case Studies in Environmental Medicine* (Feb. 2001), *available at* http://www.atsdr.cdc.gov/csem/toluene/docs/toluene.pdf.

[115] *Id.*

the liver and kidneys.[116]

16. Ethylbenzene is a commonly occurring component of petroleum. Once refined, it is used in many consumer products such as gasoline, pesticides, varnishes and paints. Ethylbenzene has been recently classified as a possible human carcinogen by the International Agency for Research on Cancer (IARC)[117], and has been associated with a number of adverse health outcomes. Breathing high levels can cause dizziness as well as throat and eye irritation; chronic, low-level exposure over several months to years can result in kidney damage as well as hearing loss.[118]

17. Xylene[119] is a VOC in petroleum. Short term exposure to xylene may result in a number of adverse human health effects including irritation of the skin, eyes, nose and throat, difficulty breathing, damage to the lungs, impaired memory, and possible damage to the liver and kidneys. Long term exposure may affect the nervous system presenting symptoms such as headaches, lack of muscle coordination, dizziness, confusion, and loss of balance.[120] More serious long term health effects include memory impairment, red and white blood cell abnormalities, abnormal heartbeat (in laboratory workers), liver damage, mutagenesis (mutations of genes), reproductive system effects, and death due to respiratory failure.[121]

e. Accidental Releases

DilBit crudes have high Total Acid Numbers (TANs), which indicates high organic acid content, typically naphthenic acids. These acids are known to cause corrosion at high temperatures, such as those which occur in many refining units, e.g., in the feed to cokers. Crude oils with a TAN number greater than 0.5 mg KOH/g[122] are generally considered to be potentially corrosive and indicative of a level of concern. A TAN number greater than 1.0 mg KOH/g is considered to be very high. Canadian tar sands crudes are high TAN crudes. The DilBits, for example, range from 0.98 to 2.42 mg KOH/g.[123]

---

[116] CDC, NIOSH, *NIOSH Pocket Guide to Chemical Hazards Toluene*, (2010), *available at* http://www.cdc.gov/niosh/npg/npgd0619.html.

[117] Leigh Henderson et al., *A Review of the Genotoxicity of Ethylbenzene*, Mutation Research/Reviews in Mutation Research, 635: 81-89 (2007).

[118] Agency of Toxic Substances and Disease Registry, *Toxicological Profile for Ethylbenzene*, (2010), *available at* http://www.atsdr.cdc.gov/toxfaqs/tf.asp?id=382&tid=66.

[119] Also known as dimethyl benzene.

[120] Agency for Toxic Substances and Disease Registry, *Toxicological Profile for Xylene* (Aug. 2007), *available at* http://www.atsdr.cdc.gov/toxprofiles/tp.asp?id=296&tid=53.

[121] Zoveidavianpoor, M., A. Samsuri, and S. R. Shadizadeh, *The Clean Up of Asphaltene Deposits in Oil Wells*, Energy Sources, Part A: Recovery, Utilization, and Environmental Effects, 35: 22-31 (2013).

[122] The Total Acid Number measures the composition of acids in a crude. The TAN value is measured as the number of milligrams (mg) of potassium hydroxide (KOH) needed to neutralize the acids in one gram of oil.

[123] www.crudemonitor.ca.

Sulfidation corrosion from elevated concentrations of sulfur compounds in some of the heavier distillation cuts is also a major concern, especially in the vacuum distillation column, coker, and hydrotreater units. The specific suite of sulfur compounds may lead to increased corrosion. The Air District must evaluate both the specific suite of sulfur compounds or the TAN for the proposed crude imports.

A crude slate change could result in corrosion from the particular suite of sulfur compounds or naphthenic acid content, which can lead to significant accidental releases, even if the crude slate is within the current design slate basis, due to compositional differences. This occurred at the Chevron Refinery in Richmond, California, which gradually changed crude slates, while staying within its established crude unit design basis for total weight percent sulfur of the blended feed to the crude unit. In fact, although the sulfur composition at Chevron Richmond remained within the design range, it did change significantly over time.[124] This change increased corrosion rates in the 4-sidecut line, which led to a catastrophic pipe failure in the #4 Crude Unit on August 6, 2012. This release sent 15,000 people from the surrounding area for medical treatment due to the release and created huge black clouds of pollution billowing across the Bay. It also put workers at the unit in grave danger, with several narrowly escaping the gas cloud and inferno.

These crudes have a significant concentration of sulfur in the heavy components of the crude coupled with high TAN and high solids, which aggravate corrosion. This means that accidents can be reasonably expected to result from incorporating tar sands crudes into refineries, even if the range of sulfur and gravity of the crudes at each facility remains the same, unless significant upgrades in metallurgy occur. The gas oil and vacuum resid piping, for example, may not be able to withstand naphthenic acid or sulfidation corrosion from tar sands crudes, leading to catastrophic releases.[125] The Air District must evaluate catastrophic releases of air pollution from these types of accidents.

Refinery emissions released in upsets and malfunctions can, in some cases, be greater than total operational emissions recorded in formal inventories. For example, an investigation of eighteen Texas oil refineries found that "upset events" between 2003 and 2008 were frequent, with some single upset events producing more toxic air pollution than what was reported to the federal Toxics Release Inventory database for the entire year.[126] These potential downstream emissions must be evaluated and mitigated.

---

[124] U.S. Chemical Safety and Hazard Investigation Board, *Interim Investigation Report: Chevron Richmond Refinery Fire*, p. 34 (2013), *available at* http://www.csb.gov/assets/1/19/Draft_Report_for_Public_Comment.pdf ("While Chevron stayed under its established crude unit design basis for total wt. % sulfur of the blended feed to the crude unit, the sulfur composition significantly increased over time. This increase in sulfur composition likely increased corrosion rates in the 4-sidecut line.").

[125] *See, e.g.*, Turini et al., *Processing Heavy Crudes in Existing Refineries*, p. 4 (2011); *available at* http://www.aiche-fpd.org/listing/112.pdf.

[126] J. Ozymy and M.L. Jarrell, *Upset over Air Pollution: Analyzing Upset Event Emissions at Petroleum Refineries*, Review of Policy Research, 28(4) (2011).

III. Conclusion

The Bakersfield Crude Terminal is likely to have significant environmental impacts which must be evaluated. Because Kern County has failed to provide environmental review for the terminal, the Air District must prepare an EIR and hold a public hearing before it may approve the Project.

Sincerely,

Elizabeth Forsyth, Attorney
Natural Resources Defense Council
111 Sutter Street, 20th Floor
San Francisco, CA 94104
eforsyth@nrdc.org
415-875-6162

Diane Bailey, Senior Scientist
Natural Resources Defense Council
111 Sutter Street, 20th Floor
San Francisco, CA 94104
dbailey@nrdc.org
415-875-6127

Denny Larson, Executive Director
Global Community Monitor
PO Box 1784
El Cerrito, CA 94530
denny@gcmonitor.org
510-233-1870

Bradley Angel, Executive Director
Greenaction for Health and Environmental Justice
559 Ellis Street
San Francisco, CA 94109
greenaction@greenaction.org
415-447-3904

Devorah Ancel, Staff Attorney
Sierra Club Beyond Oil Campaign
85 Second Street, 2nd Floor
San Francisco, CA 94105
devorah.ancel@sierraclub.org
415-977-5721

Ethan Buckner, U.S. Organizer
ForestEthics
One Haight Street
San Francisco, CA 94102
ethan@forestethics.org
415-863-4563

Yana Garcia, Staff Attorney
Communities for a Better Environment
1904 Franklin Street, Suite 600
Oakland, CA 94612
roger@cbecal.org
510-302-0430 ext. 16

Ara Marderosian
Sequoia ForestKeeper
PO Box 2134
Kernville, CA 93238-2134
are@sequoiaforestkeeper.org
760-376-4434

Gordon Nipp
Sierra Club
Kern-Kaweah Chapter
Box 3357
Bakersfield, CA 93385-3357
gnipp@bak.rr.com
661-872-2432

EXHIBIT 7

SUPERIOR COURT OF CALIFORNIA
COUNTY OF SAN FRANCISCO

Document Scanning Lead Sheet

Nov-14-2014 3:21 pm

Case Number: CPF-14-513557

Filing Date: Nov-14-2014 3:20

Filed by: JEAN KONG

Juke Box: 001 Image: 04691499

REQUEST FOR CLERK'S/REPORTER'S TRANSCRIPT

COMMUNITIES FOR A BETTER ENVIRONMENT et al VS. BAY AREA AIR QUALITY MANAGEMENT DISTRICT

001C04691499

Instructions:
Please place this sheet on top of the document to be scanned.

ATTORNEY OR PARTY WITHOUT ATTORNEY (Name, State Bar number, and address):
Stacey P. Geis (CABN 181444); Kristen L. Boyles (CABN 158450)
Earthjustice
50 California Street, Suite 500, San Francisco, CA 94111

TELEPHONE NO.: 415-217-2000 FAX NO. (optional): 415-217-2040
E-MAIL ADDRESS (optional): sgeis@earthjustice.org; kboyles@earthjustice.org
ATTORNEY FOR (Name): Communities for a Better Environment, et al.

FILED
Superior Court of California
County of San Francisco
NOV 14 2014
CLERK OF THE COURT
BY: Deputy Clerk

SUPERIOR COURT OF CALIFORNIA, COUNTY OF San Francisco
STREET ADDRESS: 400 McAllister Street
MAILING ADDRESS:
CITY AND ZIP CODE: San Francisco, CA 94102
BRANCH NAME: Civic Center Courthouse

Plaintiff/Petitioner: Communities for a Better Environment, et al.
Defendant/Respondent: Bay Area Quality Management District

APPELLANT'S NOTICE DESIGNATING RECORD ON APPEAL (UNLIMITED CIVIL CASE)

Superior Court Case Number: CPF-14-513557

RE: Appeal filed on (date): 11-14-2014

Court of Appeal Case Number (if known):

Notice: Please read form APP-001 before completing this form. This form must be filed in the superior court, not in the Court of Appeal.

1. **RECORD OF THE DOCUMENTS FILED IN THE SUPERIOR COURT**

I elect to use the following method of providing the Court of Appeal with a record of the documents filed in the superior (*check a, b, c, d, or e and fill in any required information):*

a. [x] A clerk's transcript under rule 8.122. (*You must check (1) or (2) and fill out the clerk's transcript section on page 2 of this form.)*

(1) [x] I will pay the superior court clerk for this transcript myself when I receive the clerk's estimate of the costs of this transcript. I understand that if I do not pay for this transcript, it will not be prepared and provided to the Court of Appeal.

(2) [ ] I request that the clerk's transcript be provided to me at no cost because I cannot afford to pay this cost. I have attached the following document *(check (a) or (b)):*

(a) [ ] An order granting a waiver of court fees and costs under rule 3.50 et seq.; or

(b) [ ] An application for a waiver of court fees and costs under rule 3.50 et seq. (*Use* Request to Waive Court Fees *(form FW-001) to prepare and file this application.*)

b. [ ] An appendix under rule 8.124.

c. [ ] The original superior court file under rule 8.128. (NOTE: *Local rules in the Court of Appeal, First, Third, Fourth, and Fifth Appellate Districts, permit parties to stipulate to use the original superior court file instead of a clerk's transcript; you may select this option if your appeal is in one of these districts and all the parties have stipulated to use the original superior court file instead of a clerk's transcript in this case. Attach a copy of this stipulation.*)

d. [ ] An agreed statement under rule 8.134. *(You must complete item 2b(2) below and attach to your agreed statement copies of all the documents that are required to be included in the clerk's transcript. These documents are listed in rule 8.134(a).)*

e. [ ] A settled statement under rule 8.137. *(You must complete item 2b(3) below and attach to your proposed statement on appeal copies of all the documents that are required to be included in the clerk's transcript. These documents are listed in rule 8.137(b)(3).)*

2. **RECORD OF ORAL PROCEEDINGS IN THE SUPERIOR COURT**

I elect to proceed:

a. [ ] WITHOUT a record of the oral proceedings in the superior court. I understand that without a record of the oral proceedings in the superior court, the Court of Appeal will not be able to consider what was said during those proceedings in determining whether an error was made in the superior court proceedings.

Case Name: Communities for a Better Environment, et al. v. Bay Area Quality Management District	Superior Court Case Number: CPF-14-513557

b. [x] WITH the following record of the oral proceedings in the superior court:

(1) [X] A reporter's transcript under rule 8.130. *(You must fill out the reporter's transcript section on page 3 of this form.)* I have *(check all that apply):*

(a) [ ] Deposited the approximate cost of transcribing the designated proceedings with this notice as provided in rule 8.130(b)(1).

(b) [ ] Attached a copy of a Transcript Reimbursement Fund application filed under rule 8.130(c)(1).

(c) [ ] Attached the reporter's written waiver of a deposit for *(check either (i) or (ii)):*

(i) [ ] all of the designated proceedings.

(ii) [ ] part of the designated proceedings.

(d) [x] Attached a certified transcript under rule 8.130(b)(3).

(2) [ ] An agreed statement. *(Check and complete either (a) or (b) below.)*

(a) [ ] I have attached an agreed statement to this notice.

(b) [ ] All the parties have agreed in writing (stipulated) to try to agree on a statement. *(You must attach a copy of this stipulation to this notice.)* I understand that, within 40 days after I file the notice of appeal, I must file either the agreed statement or a notice indicating the parties were unable to agree on a statement and a new notice designating the record on appeal.

(3) [ ] A settled statement under rule 8.137. *(You must attach the motion required under rule 8.137(a) to this form.)*

3. RECORD OF AN ADMINISTRATIVE PROCEEDING TO BE TRANSMITTED TO THE REVIEWING COURT

[x] I request that the clerk transmit to the reviewing court under rule 8.123 the record of the following administrative proceeding that was admitted into evidence, refused, or lodged in the superior court *(give the title and date or dates of the administrative proceeding):*

Title of Administrative Proceeding	Date or Dates
Administrative Record, Volume 1 of 2 (Pages CBE001-270)	June 18, 2014
Administrative Record, Volume 2 of 2 (Pages CBE271-384)	June 18, 2014

4. NOTICE DESIGNATING CLERK'S TRANSCRIPT

(You must complete this section if you checked item 1a. above indicating that you elect to use a clerk's transcript as the record of the documents filed in the superior court.)

a. **Required documents.** The clerk will automatically include the following items in the clerk's transcript, but you must provide the date each document was filed or, if that is not available, the date the document was signed.

	Document Title and Description	Date of Filing
(1)	Notice of appeal	Nov. 14, 2014
(2)	Notice designating record on appeal *(this document)*	Nov. 14, 2014
(3)	Judgment or order appealed from	Sept. 19, 2014
(4)	Notice of entry of judgment *(if any)*	Oct. 16, 2014
(5)	Notice of intention to move for new trial or motion to vacate the judgment, for judgment notwithstanding the verdict, or for reconsideration of an appealed order *(if any)*	n/a
(6)	Ruling on one or more of the items listed in (5).	n/a
(7)	Register of actions or docket *(if any)*	n/a

Case Name: Communities for a Better Environment, et al. v. Bay Area Quality Management District	Superior Court Case Number: CPF-14-513557

4. **NOTICE DESIGNATING CLERK'S TRANSCRIPT**

b. **Additional documents.** *(If you want any documents from the superior court proceeding in addition to the items listed in a. above to be included in the clerk's transcript, you must identify those documents here.)*

[x] I request that the clerk include the following documents from the superior court proceeding in the transcript. *(You must identify each document you want included by its title and provide the date it was filed or, if that is not available, the date the document was signed)*

	Document Title and Description	Date of Filing
(8)	(Please see attached)	
(9)		
(10)		
(11)		
(12)		

[x] See additional pages.

c. **Exhibits to be included in clerk's transcript.**

[ ] I request that the clerk include in the transcript the following exhibits that were admitted in evidence, refused, or lodged in the superior court *(for each exhibit, give the exhibit number, such as Plaintiff's #1 or Defendant's A, and a brief description of the exhibit. Indicate whether or not the court admitted the exhibit into evidence):*

	Exhibit Number	Description	Admitted (Yes/No)
(1)			
(2)			
(3)			
(4)			
(5)			

[ ] See additional pages.

5. **NOTICE DESIGNATING REPORTER'S TRANSCRIPT**

(You must complete this section if you checked item 2b(1) above indicating that you elect to use a reporter's transcript as the record of the oral proceedings in the superior court. Please remember that you must pay for the cost of preparing the reporter's transcript.)

a. I request that the reporters provide *(check one):*

(1) [ ] My copy of the reporter's transcript in paper format.

(2) [ ] My copy of the reporter's transcript in computer-readable format.

(3) [ ] My copy of the reporter's transcript in paper format and a second copy in computer-readable format.

(Code Civ. Proc., § 271; Cal. Rules of Court, rule 8.130(f)(4).)

Case Name: Communities for a Better Environment, et al. v. Bay Area Quality Management District	Superior Court Case Number: CPF-14-513557

b. **Proceedings.**

I request that the following proceedings in the superior court be included in the reporter's transcript. *(You must identify each proceeding you want included by its date, the department in which it took place, a description of the proceedings—for example, the examination of jurors, motions before trial, the taking of testimony, or the giving of jury instructions—the name of the court reporter who recorded the proceedings, and whether a certified transcript of the designated proceeding was previously prepared.)*

	Date	Department	Full/Partial Day	Description	Reporter's Name	Prev. prepared?
(1)	9/5/2014	504	Partial	Motion for Preliminary Injuction	Cynthia J. Poliseri (RV)	☐ Yes ☐ No
(2)						☐ Yes ☐ No
(3)						☐ Yes ☐ No
(4)						☐ Yes ☐ No
(5)						☐ Yes ☐ No
(6)						☐ Yes ☐ No
(7)						☐ Yes ☐ No

c. The proceedings designated in 5b ☐ include ☐ do not include all of the testimony in the superior court.

If the designated proceedings DO NOT include all of the testimony, state the points that you intend to raise on appeal *(rule 8.130(a)(2) provides that your appeal will be limited to these points unless, on motion, the reviewing court permits otherwise).*

Date: November 14, 2014

Stacey P. Geis
(TYPE OR PRINT NAME)

Stacey P. Geis
(SIGNATURE OF APPELLANT OR ATTORNEY)

Communities for a Better Environment, et al. v. Bay Area Air Quality Management District, et al.

Case No.: CPF 14-513557
EJ: "Richmond Crude by Rail (2714)"

SAN FRANCISCO COUNTY SUPERIOR COURT

1.	Verified Petition for Writ of Mandate and Complaint for Declaratory and Injunctive Relief	03/27/2014
2.	Memorandum of Points and Authorities ISO of Plaintiff's Motion for Preliminary Injunction	03/27/2014
3.	Declarations of Adenike Adeyeye ISO of Plaintiffs' Motion for Preliminary Injunction	03/27/2014
4.	Declaration of Phyllis Fox ISO of Plaintiffs' Motion for Preliminary Injunction	03/27/2014
5.	Declaration of Lio Saeteurn ISO of Plaintiffs' Motion for Preliminary Injunction	03/27/2014
6.	Declaration of Andres Soto ISO of Plaintiffs' Motion for Preliminary Injunction	03/27/2014
7.	BAAQMD Memorandum of Points and Authorities in Opposition to Petitioners' Motion for Preliminary Injunction	04/15/2014
8.	Declaration of Jim Karas in Support of BAAQMD Responses in Opposition to Petitioners' Motion for Preliminary Injunction	04/15/2014
9.	Defendant Kinder Morgan Opposition to Motion for Preliminary Injunction	04/15/2014
10.	Declaration of Robert Onufer ISO of Defendant Kinder Morgan Opposition to Motion for Preliminary Injunction	04/15/2014
11.	Declaration of Gary Rubenstein ISO of Defendant Kinder Morgan Opposition to Motion for Preliminary Injunction	04/15/2014
12.	Declaration of Mathew Tobin ISO of Defendant Kinder Morgan Opposition to Motion for Preliminary Injunction	04/15/2014
13.	Petitioners' Reply Brief ISO Motion for Preliminary Injunction	04/21/2014

14.	Supplemental Declaration of Dr. Phyllis Fox ISO Motion for Preliminary Injunction	04/21/2014
15.	Declaration of Roger Lin ISO Motion for Preliminary Injunction	04/21/2014
16.	Declaration of Jaclyn H. Prange ISO Motion for Preliminary Injunction	04/21/2014
17.	Declaration of Suma Peesapati ISO Motion for Preliminary Injunction and Petitioners' Request for Judicial Notice	04/21/2014
18.	Defendant Kinder Morgan Request for Leave to File Surreply in Opposition to Plaintiffs' Reply Brief Re Motion for Preliminary Injunction	04/22/2014
19.	Defendant Kinder Morgan Objections to Plaintiffs' Untimely Declarations and RJN	04/23/2014
20.	Petitioners' Opposition and Response to Kinder Morgan Request for Leave to File Surreply Opposing Motion for Preliminary Injunction	04/24/2014
21.	BAAQMD RJN and Decl of Alexander Crockett	07/01/2014
22.	KM Memorandum of Demurrer Proof of Service	07/01/2014
23.	KM RJN on Demurrer	07/01/2014
24.	BAAQMD Motion for Judgment	07/01/2014
25.	Tesoro Memo ISO Tesoro Demurrer to Pet Writ of Mandate	07/01/2014
26.	Tesoro RJN ISO Tesoro Demurrer to Pet Writ of Mandate	07/01/2014

Communities for a Better Environment, et al. v. Bay Area Air Quality Management District, et al.

Case No.: CPF 14-513557
EJ: "Richmond Crude by Rail (2714)"

SAN FRANCISCO COUNTY SUPERIOR COURT

27.	Pet Notice of Motion and Motion for Judgment	07/31/2014
28.	Pet Memo ISO Notice of Motion and Motion for Judgment Proof of service	08/01/2014
29.	Pet Errata to Memo Memo ISO Notice of Motion and Motion for Judgment	08/04/2014
30.	Pet Opposition to BAAQMD Motion for Judgment and Opp to KM and Tesoro Demurrers	08/15/2014
31.	Decl of Lin ISO Opp to Mt Judgment	08/15/2014
32.	BAAQMD Opp to Pet Mt for Judgment	08/15/2014
33.	KM Opp to Pet Motion for Judgment POS	08/15/2014
34.	Km RJN ISO Opp to Pet Motion for Judgment POS	08/15/2014
35.	Tesoro Opp to Pet Mt for Judgment	08/15/2014
36.	Decl of Craig de Recat ISO Tesoro's Opp	08/15/2014
37.	BAAQMD Reply Memo ISO of Motion for Judgment	08/22/2014
38.	KM Reply ISO of Demurrer	08/22/2014
39.	KM RJN ISO Reply of Demurrer	08/22/2014
40.	Pet Reply Brief ISO Motion for Judgment	08/22/2014
41.	Tesoro Reply Memo ISO its Demurrer to Pet Complaint	08/22/2014
42.	Decl of Peesapati ISO Pet Reply Brief ISO Mt for Judgment	09/2/2014

ATTACHMENT 2

November 19, 2014

Ms. Laura E. Horton
Adams Broadwell Joseph & Cardozo
601 Gateway Boulevard, Suite 1000
South San Francisco, CA 94080

Subject: Comments on the Revised Draft Environmental Impact Report Prepared for the Phillips 66 Company Rail Spur Extension and Crude Unloading Project

Dear Ms. Horton:

This letter contains my comments on the Revised Draft Environmental Impact Report ("RDEIR") for the Phillips 66 Company Rail Spur Extension Project ("Project") prepared by San Luis Obispo County ("County") under the California Environmental Quality Act ("CEQA"). The Project is located in an unincorporated portion of southwestern San Luis Obispo County. The Project includes the extension of an existing rail spur, a crude oil railcar unloading facility, and associated aboveground pipelines.

I am an environmental biologist with 21 years of professional experience in wildlife ecology, forestry, and natural resource management. To date, I have served as a biological resources expert for over 100 projects throughout California. My experience in this regard includes assisting various clients with evaluations of biological resource issues, and preparing comments (or testimony) on projects undergoing NEPA and/or CEQA review. My educational background includes a B.S. in Resource Management from the University of California at Berkeley, and a M.S. in Wildlife and Fisheries Science from the Pennsylvania State University.

The comments contained herein are based on my review of the environmental documents prepared for the Project, a review of scientific literature pertaining to biological resources known to occur in the Project area, and the knowledge and experience I have acquired during more than 21 years of working in the field of natural resources management.

BOTANICAL RESOURCES

Botanical Surveys

Surveyor Qualifications

The CDFW's *Protocols for Surveying and Evaluating Impacts to Special Status Native Plant Populations and Natural Communities* ("CDFW protocol") identifies the qualifications necessary of botanical consultants.[1] The Botanical Assessment fails to substantiate the two surveyors possessed those qualifications. However, one is noted as a senior ecologist (without any indication of her area of expertise), whereas the other is noted as a wildlife biologist.[2] Having a wildlife biologist conduct rare plant surveys is inappropriate, especially given the cryptic nature and diminutive size of some of the target rare plant species (e.g., marsh sandwort). ABJC-40

Survey Effort

The Botanical Assessment suggests the entire Project area and a 100-foot buffer area surrounding the Project footprint were surveyed for rare plants.[3] Neither the RDEIR nor the Botanical Assessment that ARCADIS prepared for the Project quantifies the survey area. However, based on the information provided in the RDEIR (e.g., length and width of rail extension), I estimate the Project impact area (excluding areas within the existing refinery) and 100-foot buffer encompasses approximately 100 acres.[4]

The Botanical Assessment identifies the survey dates, hours, and number of surveyors as the following: ABJC-41

- October 9, 2012 = 2 biologists (5 hours)
- November 13, 2012 = 1 biologist (3 hours)
- April 29, 2013 = 2 biologists (4 hours)
- June 11, 2013 = 1 biologist (coastal access route; hours not provided)[5]

Based on the information provided in the Botanical Assessment, a total of 21 hours were spent surveying the Project impact area and surrounding 100-foot buffer. In addition, if my estimate of the survey area is correct, the level of effort devoted to each survey ranged from 10 acres per hour (Oct 2012) to 33 acres per hour (Nov 2012). This level of effort was grossly insufficient to detect all potentially occurring rare plant species, especially because some of the target species are very cryptic and diminutive, and when

[1] California Department of Fish and Game. 2009. Protocols for Surveying and Evaluating Impacts to Special Status Native Plant Populations and Natural communities. Wildlife and Habitat Data Analysis Branch. 7 pp.

[2] RDEIR, Appendix C.1, p. C.1-8.

[3] *Ibid*.

[4] RDEIR, pp. 2.5, 4.4-21 and -22.

[5] RDEIR, Appendix C.1, pp. C.1-8 and -24.

rare plant species are found it takes additional time to map and record the necessary data for each occurrence/population (which reduces the amount of ground covered per hour). For example, marsh sandwort is extremely hard to detect because it has a stem < 1mm, leaves 1-2 mm, and only 1-2 flowers.[6] Based on communication with local experts, adequate surveys for marsh sandwort and other species that have the potential to occur on the site would require a level of effort of approximately 2 acres per hour.

As the CDFW protocol indicates, identification of the plants that occur on a site "may involve multiple visits to the same site (e.g. in early, mid, and late-season for flowering plants) to capture the floristic diversity at a level necessary to determine if special status plants are present." A total of 77 rare plant species are known to occur in the eight topographic quadrangles covering the Project site and surrounding area.[7] Based on a review of the habitat within the Project site and the survey dates reported in the Botanical Assessment, it is evident that ARCADIS did not conduct an appropriate number of visits to capture the floristic diversity and potential rare plant species of the Project site, particularly for species with limited blooming periods. Indeed, ARCADIS's surveys failed to account for potentially occurring rare plant species that have peak blooming periods during the months of May and August.[8] These include three species that are federally or state listed under the Endangered Species Act, one Rank 1B.2 species, and a Rank 4.2 species:

ABJC-41 (cont.)

- Marsh sandwort (*Arenaria paludicola*); **state and federally endangered**
    - Reaches peak flowering condition in May. This species is very difficult to detect due to its diminutive nature. ARCADIS personnel spent an inadequate amount of time surveying for this cryptic species.
- Surf thistle (*Cirsium rhothophilum*); **state threatened**
    - Reaches peak flowering condition in May.
- La Graciosa thistle (*Cirsium scariousm* var. *loncholepis*); **state threatened and federally endangered; federally designated critical habitat encompasses much of the Project area.**[9]
    - Reaches peak flowering condition in August.
- Short-lobed broomrape (*Orobanche parishii* subsp. *brachyloba*); Rank 4.2
    - Reaches peak flowering condition in May.
- Black-flowered figwort (*Scrophularia atrata*); Rank 1B.2
    - Reaches peak flowering condition in May.

[6] Jepson Flora Project (JFP). 2014 (v. 1.0). Jepson eFlora, http://ucjeps.berkeley.edu/IJM.html.

[7] California Native Plant Society (CNPS). 2014. *Inventory of Rare and Endangered Plants* (online edition). California Native Plant Society. Sacramento, CA. Accessed from http://rareplants.cnps.org/

[8] Jepson Flora Project (JFP). 2014 (v. 1.0). Jepson eFlora, http://ucjeps.berkeley.edu/IJM.html.

[9] RDEIR, Appendix C.1, Figure 7.

Reference Sites

The CDFW protocol states that botanical surveys should be conducted in the field at the time of year when species are both evident and identifiable. Usually this is during flowering or fruiting, with visits spaced throughout the growing season to accurately determine all plant species that exist within a given project area (i.e., the "floristic" survey recommended by CDFW guidelines). When special-status plants are known to occur in the type(s) of habitat present in the project area, CDFW states that reference sites (nearby accessible occurrences of the plants) should be used to determine whether those species are identifiable at the time of the survey and to obtain a visual image of the target species, associated habitat, and associated natural community.[10]

Understanding the importance of this issue requires some basic knowledge of plant phenology. The California Native Plant Society ("CNPS") and other sources provide information on the blooming period associated with a given plant species. For example, a plant's blooming period may be reported as occurring between May and October. However, that does not mean that the plant *will be* in bloom throughout that entire period. It might bloom in May one year, but not until October the next year. Similarly, the plant might be blooming in May at one locality and in August at another locality because the reported blooming periods account for the entire range of the species. Furthermore, some plants, especially annual species, might not even emerge from the ground during some years. Ultimately, presence of the plant and its specific blooming period during any given year is dictated by the climate (e.g., rainfall and temperature) and other factors that for most plants are poorly understood. This is why the CDFW protocol (and protocols prepared by other resource agencies) establishes the need for the investigators to visit reference populations to establish that target species are both evident and identifiable (e.g., blooming) at the time of the surveys. ABJC-42

Because ARCADIS personnel did not check reference populations for any species other than Nipomo Mesa lupine, there is no way of knowing whether the target species were evident and identifiable at the time of ARCADIS's surveys. Indeed, given the ongoing drought, it is very likely that some species did not even germinate in 2012 or 2013. Consequently, full floristic (protocol level) rare plant surveys of the Project area need to be conducted by qualified botanists after those botanists have visited reference sites to confirm the target species are evident and identifiable.

Abundance Data

The CDFW protocol states: "[a]n indication of the prevalence (estimated total numbers, percent cover, density, etc.) of the species and communities on the site is also useful to assess the significance of a particular population." The Botanical Assessment does not disclose the number of individuals and size of each rare plant population found within the Project site. This precludes the ability to evaluate the local, regional, and global significance of the populations that occur on the Project site. Furthermore, abundance ABJC-43

[10] CDFG. 2009. Protocols for Surveying and Evaluating Impacts to Special Status Native Plant Populations and Natural Communities. p. 4.

data are required to adequately address cumulative impacts, and the Project's contribution to those impacts.

Conclusion

The RDEIR states: "[s]ensitive species that have been identified within the Project Site area are limited to: CNPS List 4 species, which does not meet the CNPS List 1B standard; and the occurrence of one documented overwintering burrowing owl."[11] This statement is incorrect. According to the Botanical Assessment: "Blochman's leafy daisy [CNPS List 1B] was found in limited numbers along the proposed secondary emergency vehicle access route at the eastern end of the Site during the June survey. It may occur elsewhere on Site but was not flowering and easily recognizable during the earlier surveys."[12] Moreover, due to the issues discussed above, the County cannot rule out the presence of other CNPS List 1B species, or the presence of one or more state or federally listed species. As a result, the County lacks the information needed to fully disclose and evaluate Project impacts to sensitive botanical resources, and perhaps more importantly, to ensure effective mitigation. Therefore, the RDEIR fails to demonstrate that its conclusions regarding rare plants are supported by substantial evidence, as required under CEQA. ABJC-44

Sensitive Vegetation Communities

The discussion of dune habitat in the Botanical Assessment describes the Silver Dune Lupine-Dune Heather vegetation type and Dune-Heather vegetation types as being separate alliances. However, based on the membership rules in the Manual of California Vegetation, Second Edition, these alliances should be treated as one.[13] The membership rules for Silver Dune Lupine-Dune (Mock) Heather Scrub, also called *Lupinus chamissonis-Ericameria ericoides* Shrubland Alliance, state that *L. chamissonis* and/**or** *E. ericoides* are conspicuous. Therefore, given that *L. chamissonis* need not be conspicuous to be treated as this as Silver Dune Lupine-Dune (Mock) Heather Scrub, the Dune-Heather alliance and its associations should be treated under the Silver Dune Lupine-Dune (Mock) Heather Scrub alliance. This alliance is considered a sensitive natural community.[14] The CDFW has indicated that any impacts to a state-listed sensitive natural community are significant and require mitigation, generally through the acquisition and preservation of habitat of equal or superior value.[15] ABJC-45

[11] RDEIR, p. 4.4-24.

[12] RDEIR, Appendix C.1, p. C.1-15.

[13] Sawyer, J.O., T. Keeler-Wolf, and J.M. Evens. 2009. *A Manual of California Vegetation.* Second edition. California Native Plant Society, Sacramento. 1300 pp.

[14] California Department of Fish and Game. 2010. *List of Vegetation Alliances and Associations*. Vegetation Classification and Mapping Program, California Department of Fish and Game. Sacramento, CA. September.

[15] California Department of Fish and Game. 2009 Jun 10. Comments on the Palmdale Hybrid Power Plant Request for Incidental Take Permit for Mohave Ground Squirrel and Additional Comments Regarding Impacts to Biological Resources. CEC Docket 08-AFC-09. Letter from Edmund Pert, Regional Manager, to Sara Head, City of Palmdale. p. 4, **Exhibit A.**

It should also be noted that all dune communities within the BSA would be considered Central Dune Scrub by Holland regardless of their alliance or association.[16] Central Dune Scrub has a Conservation Status Rank of S2.[17] A rank of S2 indicates a vegetation type that is "Imperiled" because of rarity due to very restricted range, very few populations, steep declines, or other factors making it very vulnerable to extirpation from jurisdiction.[18] Therefore, all dune habitat within the BSA is considered sensitive and impacts should be considered significant.

The Botanical Assessment inaccurately classifies the arroyo willow vegetation type, which is stated as being dominated by *Salix lasiolepis.* The Botanical Assessment classifies this community as Arroyo Willow Riparian Scrub or Central Willow Scrub; however, neither of these names are accurate according to the Manual of California Vegetation[19] or Holland.[20] Because it is dominated by *Salix lasiolepis*, this community should be classified as either Arroyo Willow Thickets, Central Coast Riparian Scrub, or Central Coast Arroyo Willow Riparian Forest.[21] Some associations of Arroyo Willow Thickets have a high priority for inventory and may be considered sensitive natural communities; however, ARCADIS did not classify this vegetation type to the association level, and therefore its sensitivity cannot be determined.[22] The latter two types, Central Coast Riparian Scrub and Central Coast Arroyo Willow Riparian Forest, are considered sensitive natural communities as they have a Subnational Conservation Status Rank of S3.[23] A rank of S3 indicates a vegetation alliance or association is "Vulnerable," meaning it is at moderate risk of extinction or elimination due to a restricted range, relatively few populations, recent and widespread declines, or other factors. Because the Botanical Assessment inaccurately classifies the arroyo willow vegetation type, the RDEIR fails to disclose it as a sensitive natural community.

ABJC-45 (cont.)

[16] Holland, R. 1986. Preliminary Descriptions of the Terrestrial Natural Communities of California. California Department of Fish and Game, The Resources Agency. 156 pp.

[17] *Ibid*.

[18] NatureServe. 2013. Interpreting NatureServe Conservation Status Ranks. NatureServe Explorer [Online] and NatureServe Central Databases, Arlington, VA. Available: http://www.natureserve.org/explorer/.

[19] Sawyer, J.O., T. Keeler-Wolf, and J.M. Evens. 2009. *A Manual of California Vegetation.* Second edition. California Native Plant Society, Sacramento. 1300 pp.

[20] Holland, R. 1986. Preliminary Descriptions of the Terrestrial Natural Communities of California. California Department of Fish and Game, The Resources Agency. 156 pp.

[21] Sawyer, J.O., T. Keeler-Wolf, and J.M. Evens. 2009. *A Manual of California Vegetation.* Second edition. California Native Plant Society, Sacramento. 1300 pp. *See also* Holland, R. 1986. Preliminary Descriptions of the Terrestrial Natural Communities of California. California Department of Fish and Game, The Resources Agency. 156 pp.

[22] California Department of Fish and Game. 2010. *List of Vegetation Alliances and Associations*. Vegetation Classification and Mapping Program, California Department of Fish and Game. Sacramento, CA. September.

[23] *Ibid*. *See also* NatureServe. 2013. Interpreting NatureServe Conservation Status Ranks. NatureServe Explorer [Online] and NatureServe Central Databases, Arlington, VA. Available: http://www.natureserve.org/explorer/.

Dune-Heather-Black Sage-Coffeeberry Association

The RDEIR states that there is the potential for a locally rare vegetation association to be present within the BSA, Dune-Heather-Black Sage-Coffeeberry Association, and that the presence of all the necessary species to form this association warrants consideration.[24] This statement indicates that the presence of this locally rare association is possible within the BSA. As a result, the presence (or absence) of the association should be definitively determined in order to ascertain if any impacts would be considered significant. The determination should be based on the California Native Plant Society/California Department of Fish & Game methodology for vegetation data collection and classification. ABJC-46

Dune Communities

The RDEIR's description of vegetation communities leaves the reader with much confusion as to how the dune areas of the BSA are classified. However, based on the comment above, all dune areas within the BSA can be considered either Silver Dune Lupine-Dune (Mock) Heather Scrub or Central Dune Scrub. In the sensitive natural communities section the RDEIR characterizes of the entire site as Central (Lucian) Coastal Scrub, which is not accurate. As described by Holland, the substrate for Central (Lucian) Scrub is exposed, often south-facing slopes with shallow and rocky soils.[25] Clearly this vegetation type has been misapplied because sandy substrates occur throughout the BSA. Therefore, all references to Central (Lucian) Coastal Scrub in the RDEIR should be changed to either Silver Dune Lupine-Dune (Mock) Heather Scrub or Central Dune Scrub, both of which are considered sensitive natural communities and would be significantly impacted by the project. As a result, the statement in the RDEIR that "none of the six sensitive natural communities have been directly mapped within the Disturbance area" is unsupported. ABJC-47

Coastal Access Route

The plant list for the proposed coastal access route includes a wetland species known as dune sedge (*Carex pansa*). When this plant is abundant it creates an alliance known as Sand Dune Sedge Swaths, which is considered a sensitive natural community.[26] However, the size and abundance of this potential vegetation type was not discussed in the Botanical Assessment. Therefore, the RDEIR lacks the information needed to evaluate potentially significant impacts to this natural community, and thus fails as an informational document under CEQA. ABJC-48

[24] RDEIR, p. 4.4-4.

[25] Holland, R. 1986. Preliminary Descriptions of the Terrestrial Natural Communities of California. California Department of Fish and Game, The Resources Agency. 156 pp.

[26] California Department of Fish and Game. 2010. *List of Vegetation Alliances and Associations*. Vegetation Classification and Mapping Program, California Department of Fish and Game. Sacramento, CA. September.

ESHAs

Areas of dune habitat are also considered Environmentally Sensitive Habitat Areas (ESHA). The Coastal Plan Policies (CPP) define the dune habitat that occurs within the Project area as part of the Guadalupe Nipomo Dunes ecosystem, an ESHA, under the section named "Guadalupe Dunes Energy Management."[27] This ecosystem is described as an 18 square mile area, lying in the northern Santa Barbara and southern San Luis Obispo counties. The U.S. Secretary of the Interior designated all of the coastal area between Point Sal and Pismo Beach, with the exception of a portion of the Guadalupe LeRoy oil field, a National Natural Landmark. In CPP documents, two development alternatives have been identified with regard to energy development on the Nipomo Dunes. Alternative 1 would not allow new or expanded coastal-dependent or resource-dependent development outside the existing oil production area (Leroy Lease). Under this alternative, the need to protect the Guadalupe Dunes ESHA outweighs the economic benefits derived from new or expanded coastal-dependent or resource-dependent uses within the area. Alternative 2 would allow limited coastal-dependent and resource-dependent development based on the findings that: (a) no alternative location is feasible for some facilities associated with the recovery of petroleum resources; and (b) the potential disruption of the habitat area can be minimized to a level where the economic benefits that would be derived by such development outweigh the impacts on the ecosystem. ABJC-49

There are also several relevant policies associated with energy development in this dune ecosystem. Policy 36: Resource-Dependent Development states the County may permit resource-dependent development within the dunes ecosystem only if consistent with the standards specified in the "Energy Facility Siting Management Plan for the Nipomo Dunes System."[28] Policy 39: Resource Sensitivity Maps identify areas within the dune ecosystem that would be susceptible to the least amount of disturbance. These maps also identify areas with the highest habitat value and susceptibility to disturbance. However, the RDEIR does not discuss how the proposed Project was designed using this siting management plan or sensitivity maps, nor was the siting management plan referenced at all in the RDEIR.

Additionally, the RDEIR inaccurately states that the project site would not be considered an ESHA because of the absence of species protected under state and federal endangered species acts; absence of fully protected species; and absence of CNPS Rank 1B species. However, rare plant surveys were not conducted in a manner adherent to established protocols, and therefore a determination of the presence of species protected under state and federal endangered species acts was not entirely possible. Moreover, occurrences of CNPS Rank 1B plant species are present within or immediately adjacent to the Project site. At a minimum, *Erigeron blockmaniae* is a Rank 1B species that would be affected by the Project, either directly or indirectly. For these reasons, and those associated with the CPP discussed above, the project would be considered within an ESHA.

[27] County of San Luis Obispo. 2007. Local Coastal Program Policy Document, a Portion of the San Luis Obispo County Land Use Element of the General Plan, Coastal Plan Policies. April. 208pp.

[28] *Ibid*

Botanical Resource Impact Issues

The RDEIR's discussion of the sensitive plant species found during the rare plant surveys lacks the level of specificity needed to determine if Project impacts would be significant, thus the RDEIR fails as an informational document under CEQA. Specifically, the RDEIR does not provide any details regarding their specific location(s), spatial distribution, or abundance within the Project site and regionally. It also fails to provide detailed analysis of direct, indirect, or cumulative impacts for any sensitive botanical resources other than Nipomo Mesa lupine.

Currently, the only place where any population numbers are discussed is in Impact BIO.2, which states that 2,000 to 2,500 individuals were estimated. However, the RDEIR does not break this total out by species, which is required to assess the significance of impacts to each species. BIO.2 only states that all four CNPS ranked species would be impacted as a result of the Project. Nevertheless, it jumps to the conclusion that:

> "[d]ue to the relatively common occurrence of these species and low-level listing under current taxonomic status, the proposed impact would not result in any substantial adverse effect on the species. Therefore, impacts would be considered less than significant."[29]

ABJC-50

The RDEIR does not provide any evidence to support this conclusion. Indeed, there is no discussion of how common each taxon is on site or in the region. Based on my independent analysis, it is likely that species-specific mitigation measures need to be developed for at least *Erigeron blockmaniae* and *Prunus fasciculata* var. *punctata* due to the low number of populations throughout their known range.

Botanical Resource Mitigation Issues

Mitigation measure BIO-1 should define a "normal" rainfall year is (by inches of precipitation) in order to remove any ambiguity associated with the trigger for the pre-construction survey for *Lupinus nipomensis*. In addition, the rainfall "trigger" should be based on information from The Land Conservancy of San Luis Obispo in relation to peak years of *L. nimpomensis* germination.

ABJC-51

The RDEIR recognizes that there may be a *L. nimpomensis* seed bank within the Project impact area, and that ground disturbance may trigger germination of the species. Therefore, in addition to pre-construction surveys for this species during a normal rainfall year (as stated in mitigation measure BIO-1), post-construction surveys should also be conducted. Post-construction survey will be useful in validating the assumptions presented in the RDEIR, and in ensuring that ongoing operations and maintenance activities do not impact the species.

[29] RDEIR, p. 4.4-28.

The Project site contains suitable habitat, and potentially a seed bank, for *L. nimpomensis*. "Full mitigation" is required for species listed under the California Endangered Species Act. As a result, compensatory mitigation for *L. nimpomensis* should be required, and not contingent on the results of a pre-construction survey of unknown quality. As currently written, mitigation measure BIO-1 does not ensure the Project would meet the state's standard for full mitigation.

The invasive species control program associated with Mitigation Measure BIO-5a should include quantifiable goals based on the reduction of cover and abundance of specific weed species to ensure that tangible and meaningful performance standards are met. ABJC-51 (cont.)

The restoration area referred to in Mitigation Measure BIO-5a should include a buffer distance (minimum of 100 feet) from the operational area of the Project to ensure ongoing operations and maintenance activities do not hamper the proposed restoration efforts.

WILDLIFE RESOURCES

Burrowing Owl

ARCADIS biologists conducted focused surveys for burrowing owls in the Project area. However, they *did not* conduct "protocol surveys," as stated in the RDEIR.[30] Indeed, the surveys deviated from the California Department of Fish and Wildlife's ("CDFW") burrowing owl survey protocol in several ways:

First, ARCADIS's surveys were limited to two visits during the breeding season: one on July 12th and one on July 15th, 2013.[31] The CDFW protocol for burrowing owl surveys entails <u>four</u> site visits (i.e., surveys) during the breeding season (1 February to 31 August), with a minimum of three survey visits, at least three weeks apart, between 15 April and 15 July, and at least one visit after 15 June.[32] ABJC-52

Second, the CDFW protocol recommends burrowing owl surveys be conducted between morning civil twilight and 10:00 AM, or during the two hours before sunset.[33] Surveys during those times provide the highest detection probabilities.[34] ARCADIS's survey report fails to identify whether the surveys of the Project site were conducted during a time of day conducive to detection of burrowing owls.

Third, the CDFW protocol directs the observer to "[s]urvey adjoining areas within 150 m (Thomsen 1971, Martin 1973), or more where direct or indirect effects could potentially

[30] *Ibid*, p. 4.4-9.

[31] *Ibid*, Appendix C.3, p. C.3-6.

[32] California Department of Fish and Game. 2012. Staff Report on Burrowing Owl Mitigation. 36 pp. Available at: <https://nrm.dfg.ca.gov/FileHandler.ashx?DocumentID=83843>. Appendix D, p. 28.

[33] *Ibid.*

[34] *Ibid.*

extend offsite."[35] Although the Project could indirectly affect (e.g., through noise and other types of disturbance) burrowing owls offsite, ARCADIS's surveys extended only 45.7 meters into the surrounding buffer zone.[36]

Fourth, burrows that provide suitable nest sites for burrowing owls are present on the Project site.[37] The CDFW protocol indicates survey reports used for CEQA documentation should include: "[a] detailed map (1:24,000 or closer to show details) showing locations of all burrowing owls, potential burrows, occupied burrows, areas of concentrated burrows, and burrowing owl sign."[38] ARCADIS's burrowing owl survey report does not include a map of potential burrows or areas of concentrated burrows. In addition, the survey report fails to provide the surveyors' qualifications; a discussion of how the timing of the survey affected the comprehensiveness and detection probability of burrowing owls; and several of the other components necessary of survey reports that are used for CEQA documentation.[39] Therefore, the conclusions in the RDEIR regarding impacts to the burrowing owl are not supported by substantial evidence. ABJC-52 (cont.)

Environmentally Sensitive Habitat Areas

The RDEIR presents the conclusion that the Project site would not be considered an Environmentally Sensitive Habitat Area ("ESHA"). It states:

> In the EIR evaluation of the Project Site, it was determined that the Project Site would not be considered ESHA for the following reasons: 1) absence of species protected under State and Federal Endangered Species Acts; 2) absence of fully protected species; 3) absence of CNPS List 1B plants; 4) lack of equivalent characteristics, function and value that is shown in nearby ESHA; 5) absence of sensitive vegetation types under the most current classification system; and, 4) historical land use impacts resulting in degraded condition of existing vegetation types (30+ years of intensive grazing, industrial uses, and human impact).[40]

ABJC-53

This rationale is not supported by information in the record.

First, Table 2 in Appendix C.2 of the RDEIR acknowledges several state and/or federally listed plant species could occur on the Project site. As discussed previously, the botanical surveys that were conducted for the Project were insufficient to infer absence of all state and/or federally listed plant species. Indeed, the RDEIR states: "[t]he current determination of presence/absence of Nipomo Mesa lupine [federally and state listed as endangered] within the Project Site cannot be adequately determined based on the survey data from Arcadis (April 2013), and moreover as a result that verification by SWCA was

---

[35] *Ibid*, p. 26.

[36] RDEIR, Appendix C.3, p. C.3-6.

[37] *Ibid*, pp. C.3-22 and -23.

[38] California Department of Fish and Game. 2012. Staff Report on Burrowing Owl Mitigation. 36 pp. Available at: <https://nrm.dfg.ca.gov/FileHandler.ashx?DocumentID=83843>. Appendix D, p. 30.

[39] *Ibid*.

[40] RDEIR, p. 4.4-24.

not possible since reconnaissance surveys were outside of the normal blooming period for this species (December-May)."[41]

Second, fully protected species are not "absent" from the site. The white-tailed kite is a fully protected species that occurs in the Project area, at least periodically according to ARCADIS's Wildlife and Habitat Assessment.[42]

Third, CNPS List 1B plants are not "absent" from the site. Blochman's leafy daisy is a CNPS List 1B plant species. According to ARCADIS's Botanical Assessment: "Blochman's leafy daisy was found in limited numbers along the proposed secondary emergency vehicle access route at the eastern end of the Site during the June survey. It may occur elsewhere on Site but was not flowering and easily recognizable during the earlier surveys."[43] As discussed previously, the botanical surveys that were conducted for the Project were insufficient to infer absence of many of the other CNPS List 1B plant species with potential to occur on the Project site.

Fourth, the RDEIR does not establish the characteristics, functions, and values in the "nearby ESHA." As a result, it lacks the information needed to compare the Project site with the nearby ESHA, and to substantiate the conclusion that the Project site does not provide the characteristics, functions, and values equivalent to the nearby ESHA.

ABJC-53 (cont.)

Fifth, the most current classification system indicates sensitive vegetation types do indeed occur on the Project site (*see above*). The RDEIR states: "the entire Project Site is described as Central (Lucian) Coastal Scrub. According the CNDDB, Central Lucian Coastal Scrub is considered state sensitive Natural Community (with no known threat) under the Holland legacy classification."[44]

Lastly, it is misleading for the RDEIR to suggest the Project area could not qualify as an ESHA due to historical land use impacts and the degraded condition of existing vegetation types. As ARCADIS's survey reports acknowledge, the Project area: (a) "provides habitat of good functional value for many wildlife species including several species of special concern;" (b) "is considered an important foraging location for both sedentary and migratory raptor species in the area;" and, (c) "provides a relatively large, undisturbed natural corridor for wildlife to move between the Nipomo Mesa and areas further inland, and the undeveloped coastline west of the Site."[45] Therefore, even though there have been historical land use impacts, the Project site has numerous habitat values that are "environmentally sensitive" and qualify it as an ESHA. The RDEIR's conclusions regarding ESHA are unsupported.

Sincerely,

Scott Cashen, M.S.
Senior Biologist

---

[41] *Ibid*, p. 4.4-27.

[42] *Ibid*, Appendix C.2, pp. C.2-16 and -20.

[43] *Ibid*, Appendix C.1, p. C.1-15.

[44] *Ibid*, p. 4.4-6.

[45] *Ibid*, Appendix C.2, pp. C.2-9, -10, and -20.

Scott Cashen, M.S.
Senior Biologist / Forest Ecologist
3264 Hudson Avenue, Walnut Creek, CA 94597. (925) 256-9185. scottcashen@gmail.com

Scott Cashen has 20 years of professional experience in natural resources management. During that time he has worked as a field biologist, forester, environmental consultant, and instructor of Wildlife Management. Mr. Cashen currently operates an independent consulting business that focuses on CEQA/NEPA compliance issues, endangered species, scientific field studies, and other topics that require a high level of scientific expertise.

Mr. Cashen has knowledge and experience with many taxa, biological resource issues, and environmental regulations. This knowledge and experience has made him a highly sought after biological resources expert. To date, he has been retained as a biological resources expert for over 40 projects. Mr. Cashen's role in this capacity has encompassed all stages of the environmental review process, from initial document review through litigation support and expert witness testimony.

Mr. Cashen is a recognized expert on the environmental impacts of renewable energy development. He has been involved in the environmental review process for 28 renewable energy projects, and he has been a biological resources expert for more of California's solar energy projects than any other private consultant. In 2010, Mr. Cashen testified on 5 of the Department of the Interior's "Top 6 Fast-tracked Solar Projects" and his testimony influenced the outcome of each of these projects.

Mr. Cashen is a versatile scientist capable of addressing numerous aspects of natural resource management simultaneously. Because of Mr. Cashen's expertise in both forestry and biology, Calfire had him prepare the biological resource assessments for all of its fuels treatment projects in Riverside and San Diego Counties following the 2003 Cedar Fire. Mr. Cashen has led field studies on several special-status species, including plants, fish, reptiles, amphibians, birds, and mammals. Mr. Cashen has been the technical editor of several resource management documents, and his strong scientific writing skills have enabled him to secure grant funding for several clients.

AREAS OF EXPERTISE

- CEQA, NEPA, and Endangered Species Act compliance issues
- Comprehensive biological resource assessments
- Endangered species management
- Renewable energy
- Forest fuels reduction and timber harvesting
- Scientific field studies, grant writing and technical editing

EDUCATION

M.S. Wildlife and Fisheries Science - The Pennsylvania State University (1998)
B.S. Resource Management - The University of California, Berkeley (1992)

PROFESSIONAL EXPERIENCE

Litigation Support / Expert Witness

As a biological resources expert, Mr. Cashen reviews CEQA/NEPA documents and provides his client(s) with an assessment of biological resource issues. He then prepares written comments on the scientific and legal adequacy of the project's environmental documents (e.g., EIR). For projects requiring California Energy Commission (CEC) approval, Mr. Cashen has submitted written testimony (opening and rebuttal) in conjunction with oral testimony before the CEC.

Mr. Cashen can lead field studies to generate evidence for legal testimony, and he can incorporate testimony from his deep network of species-specific experts. Mr. Cashen's clients have included law firms, non-profit organizations, and citizen groups.

REPRESENTATIVE EXPERIENCE

Solar Energy Facilities

- Abengoa Mojave Solar Project
- Avenal Energy Power Plant
- Beacon Solar Energy Project
- Blythe Solar Power Project
- Calico Solar Project
- Calipatria Solar Farm II
- Carrizo Energy Solar Farm
- Catalina Renewable Energy Project
- Fink Road Solar Farm
- Genesis Solar Energy Project
- Heber Solar Energy Facility
- Imperial Valley Solar Project
- Ivanpah Solar Electric Generating
- Maricopa Sun Solar Complex
- Mt. Signal and Calexico Solar
- San Joaquin Solar I & II
- Solar Gen II Projects
- SR Solis Oro Loma
- Vestal Solar Facilities
- Victorville 2 Power Project

Geothermal Energy Facilities

- East Brawley Geothermal
- Mammoth Pacific 1 Replacement
- Western GeoPower Plant and

Wind Energy Facilities

- Catalina Renewable Energy Project
- Ocotillo Express Wind Energy
- San Diego County Wind Ordinance
- Tres Vaqueros Repowering Project
- Vasco Winds Relicensing Project

Biomass Facilities

- Tracy Green Energy Project

Development Projects

- Alves Ranch
- Aviano
- Chula Vista Bayfront Master Plan
- Columbus Salame
- Concord Naval Weapons Station
- Faria Annexation
- Live Oak Master Plan
- Napa Pipe
- Roddy Ranch
- Rollingwood
- Sprint-Nextel Tower

Project Management

Mr. Cashen has managed several large-scale wildlife, forestry, and natural resource management projects. Many of these projects have required hiring and training field crews, coordinating with other professionals, and communicating with project stakeholders. Mr. Cashen's experience in study design, data collection, and scientific writing make him an effective project manager, and his background in several different natural resource disciplines enable him to address the many facets of contemporary land management in a cost-effective manner.

REPRESENTATIVE EXPERIENCE

Wildlife Studies

- Peninsular Bighorn Sheep Resource Use and Behavior Study: (*CA State Parks*)
- "KV" Spotted Owl and Northern Goshawk Inventory: (*USFS, Plumas NF*)
- Amphibian Inventory Project: (*USFS, Plumas NF*)
- San Mateo Creek Steelhead Restoration Project: (*Trout Unlimited and CA Coastal Conservancy, Orange County*)
- Delta Meadows State Park Special-status Species Inventory: (*CA State Parks, Locke*)

Natural Resources Management

- Mather Lake Resource Management Study and Plan – (*Sacramento County*)
- Placer County Vernal Pool Study – (*Placer County*)
- Weidemann Ranch Mitigation Project – (*Toll Brothers, Inc., San Ramon*)
- Ion Communities Biological Resource Assessments – (*Ion Communities, Riverside and San Bernardino Counties*)
- Del Rio Hills Biological Resource Assessment – (*The Wyro Company, Rio Vista*)

Forestry

- Forest Health Improvement Projects – (*CalFire, SD and Riverside Counties*)
- San Diego Bark Beetle Tree Removal Project – (*SDG&E, San Diego Co.*)
- San Diego Bark Beetle Tree Removal Project – (*San Diego County/NRCS*)
- Hillslope Monitoring Project – (*CalFire, throughout California*)

Biological Resources

Mr. Cashen has a diverse background with biological resources. He has conducted comprehensive biological resource assessments, habitat evaluations, species inventories, and scientific peer review. Mr. Cashen has led investigations on several special-status species, including ones focusing on the foothill yellow-legged frog, mountain yellow-legged frog, desert tortoise, steelhead, burrowing owl, California spotted owl, northern goshawk, willow flycatcher, Peninsular bighorn sheep, red panda, and forest carnivores.

REPRESENTATIVE EXPERIENCE

Avian

- Study design and Lead Investigator - Delta Meadows State Park Special-Status Species Inventory *(CA State Parks: Locke)*
- Study design and lead bird surveyor - Placer County Vernal Pool Study *(Placer County: throughout Placer County)*
- Surveyor - Willow flycatcher habitat mapping *(USFS: Plumas NF)*
- Independent surveyor - Tolay Creek, Cullinan Ranch, and Guadacanal Village restoration projects *(Ducks Unlimited/USGS: San Pablo Bay)*
- Study design and Lead Investigator - Bird use of restored wetlands research *(Pennsylvania Game Commission: throughout Pennsylvania)*
- Study design and surveyor - Baseline inventory of bird species at a 400-acre site in Napa County *(HCV Associates: Napa)*
- Surveyor - Baseline inventory of bird abundance following diesel spill *(LFR Levine-Fricke: Suisun Bay)*
- Study design and lead bird surveyor - Green Valley Creek Riparian Restoration Site *(City of Fairfield: Fairfield, CA)*
- Surveyor - Burrowing owl relocation and monitoring *(US Navy: Dixon, CA)*
- Surveyor - Pre-construction raptor and burrowing owl surveys *(various clients and locations)*
- Surveyor - Backcountry bird inventory *(National Park Service: Eagle, Alaska)*
- Lead surveyor - Tidal salt marsh bird surveys (*Point Reyes Bird Observatory: throughout Bay Area*)
- Surveyor – Pre-construction surveys for nesting birds (*various clients and locations)*

Amphibian

- Crew Leader - Red-legged frog, foothill yellow-legged frog, and mountain yellow-legged frog surveys *(USFS: Plumas NF)*

- Surveyor - Foothill yellow-legged frog surveys *(PG&E: North Fork Feather River)*
- Surveyor - Mountain yellow-legged frog surveys *(El Dorado Irrigation District: Desolation Wilderness)*
- Crew Leader - Bullfrog eradication *(Trout Unlimited: Cleveland NF)*

Fish and Aquatic Resources

- Surveyor - Hardhead minnow and other fish surveys *(USFS: Plumas NF)*
- Surveyor - Weber Creek aquatic habitat mapping (*El Dorado Irrigation District: Placerville, CA*)
- Surveyor - Green Valley Creek aquatic habitat mapping *(City of Fairfield: Fairfield, CA)*
- GPS Specialist - Salmonid spawning habitat mapping *(CDFG: Sacramento River)*
- Surveyor - Fish composition and abundance study (*PG&E: Upper North Fork Feather River and Lake Almanor*)
- Crew Leader - Surveys of steelhead abundance and habitat use *(CA Coastal Conservancy: Gualala River estuary)*
- Crew Leader - Exotic species identification and eradication *(Trout Unlimited: Cleveland NF)*

Mammals

- Principal Investigator – Peninsular bighorn sheep resource use and behavior study (*California State Parks: Freeman Properties*)
- Scientific Advisor –Study on red panda occupancy and abundance in eastern Nepal *(The Red Panda Network: CA and Nepal)*
- Surveyor - Forest carnivore surveys *(University of CA: Tahoe NF)*
- Surveyor - Relocation and monitoring of salt marsh harvest mice and other small mammals *(US Navy: Skagg's Island, CA)*
- Surveyor – Surveys for Monterey dusky-footed woodrat. Relocation of woodrat houses (*Touré Associates: Prunedale*)

Natural Resource Investigations / Multiple Species Studies

- Scientific Review Team Member – Member of the science review team assessing the effectiveness of the US Forest Service's implementation of the Herger-Feinstein Quincy Library Group Act.
- Lead Consultant - Baseline biological resource assessments and habitat mapping for CDF management units *(CDF: San Diego, San Bernardino, and Riverside Counties)*

- Biological Resources Expert – Peer review of CEQA/NEPA documents (*Adams Broadwell Joseph & Cardoza: California)*
- Lead Consultant - Pre- and post-harvest biological resource assessments of tree removal sites *(SDG&E: San Diego County)*
- Crew Leader - T&E species habitat evaluations for Biological Assessment in support of a steelhead restoration plan *(Trout Unlimited: Cleveland NF)*
- Lead Investigator - Resource Management Study and Plan for Mather Lake Regional Park *(County of Sacramento: Sacramento, CA)*
- Lead Investigator - Biological Resources Assessment for 1,070-acre Alfaro Ranch property *(Yuba County, CA)*
- Lead Investigator - Wildlife Strike Hazard Management Plan *(HCV Associates: Napa)*
- Lead Investigator - Del Rio Hills Biological Resource Assessment *(The Wyro Company: Rio Vista, CA)*
- Lead Investigator – Ion Communities project sites (*Ion Communities: Riverside and San Bernardino Counties*)
- Surveyor – Tahoe Pilot Project: Validation of California's Wildlife Habitat Relationships (CWHR) Model *(University of California: Tahoe NF)*

Forestry

Mr. Cashen has five years of experience working as a consulting forester on projects throughout California. Mr. Cashen has consulted with landowners and timber operators on forest management practices; and he has worked on a variety of forestry tasks including selective tree marking, forest inventory, harvest layout, erosion control, and supervision of logging operations. Mr. Cashen's experience with many different natural resources enable him to provide a holistic approach to forest management, rather than just management of timber resources.

REPRESENTATIVE EXPERIENCE

- Lead Consultant - CalFire fuels treatment projects *(SD and Riverside Counties)*
- Lead Consultant and supervisor of harvest activities – San Diego Gas and Electric Bark Beetle Tree Removal Project *(San Diego)*
- Crew Leader - Hillslope Monitoring Program *(CalFire: throughout California)*
- Consulting Forester – Forest inventories and timber harvest projects *(various clients throughout California)*

Grant Writing and Technical Editing

Mr. Cashen has prepared and submitted over 50 proposals and grant applications. Many of the projects listed herein were acquired through proposals he wrote. Mr. Cashen's clients and colleagues have recognized his strong scientific writing skills and ability to generate technically superior proposal packages. Consequently, he routinely prepares funding applications and conducts technical editing for various clients.

PERMITS

U.S. Fish and Wildlife Service Section 10(a)(1)(A) Recovery Permit for the Peninsular bighorn sheep

CA Department of Fish and Game Scientific Collecting Permit

PROFESSIONAL ORGANIZATIONS / ASSOCIATIONS

The Wildlife Society (Conservation Affairs Committee member)

Cal Alumni Foresters

Mt. Diablo Audubon Society

OTHER AFFILIATIONS

Scientific Advisor and Grant Writer – *The Red Panda Network*

Scientific Advisor – *Mt. Diablo Audubon Society*

Grant Writer – *American Conservation Experience*

Scientific Advisor and Land Committee Member – *Save Mt. Diablo*

TEACHING EXPERIENCE

Instructor: Wildlife Management - The Pennsylvania State University, 1998

Teaching Assistant: Ornithology - The Pennsylvania State University, 1996-1997

California Natural Resources Agency
DEPARTMENT OF FISH AND GAME
South Coast Region
4949 Viewridge Avenue
San Diego, CA 92123
(858) 467-4201
http://www.dfg.ca.gov

ARNOLD SCHWARZENEGGER, Governor
DONALD KOCH, Director

DOCKET	
08-AFC-9	
DATE	June 10 2009
RECD.	June 10 2009

June 10, 2009

City of Palmdale
c/o Ms. Sara Head
AECOM Environment
1220 Avenida Acaso
Camarillo, California 93012
Office: 805-388-3775
Fax: 805-388-3577
Sara.head@aecom.com

Subject: Comments on the Palmdale Hybrid Power Plant Request for Incidental Take Permit for Mohave Ground Squirrel and Additional Comments Regarding Impacts to Biological Resources. CEC Docket 08-AFC-09

Dear Ms. Head:

The Department of Fish and Game (Department) has reviewed the State Incidental Take Permit Application (AMEC 2009 [Application]), submitted for the Palmdale Hybrid Power Plant Project (Project) proposed by the City of Palmdale (Applicant). This Application was submitted in draft form for Department feedback in anticipation of meeting the requirements pursuant to the California Endangered Species Act (CESA) Incidental Take Permit application process, as described in the California Code of Regulations (CCR), Title 14, Section 783.2. Incidental take of State-listed species in association with the Project will ultimately be permitted by the California Energy Commission (CEC), pursuant to the Warren Alquist Act. Although CEC will serve as the permitting agency, the substantive criteria in CESA must still be met. The Department is assisting CEC in determining the scope and nature of incidental take coverage and will be providing CEC with recommendations to this effect. This letter serves to identify informational gaps that must be remedied prior to securing incidental take coverage. It is important to note that incidental take of fully protected and unlisted species cannot be authorized under CESA.

In addition, the Department had reviewed the Biological Resources Technical Report (AMEC 2008) and associated follow-up reports. The Department offers the Applicant comments on the proposed project's impacts to sensitive biological resources not covered under CESA, for which the Department is trustee (Fish and Game Code Section 1802). The Department additionally provided the Commission with comments on the Biological Resources Technical Report (Department 2009).

Comments on Applicant's Incidental Take Application

The Application is not sufficiently responsive to some of the required elements of the application process (Title 14, Section 783.2) and is lacking some critical information. We therefore would deem this Application as incomplete were it to be formally submitted to the Department. Because the information required by the application process is necessary for the permitting agency's "take" analysis and compliance with CESA, incidental take coverage cannot be

PROOF OF SERVICE (REVISED 4/30/09) FILED WITH
ORIGINAL MAILED FROM SACRAMENTO ON 6/11/09
TG

conferred absent this information. We offer the following comments on specific elements in your Application, as well as suggestions on how to correct deficient items. We anticipate that when the items deemed incomplete are corrected in the suggested manner, the Department will be able to indicate to CEC that all the information required to deem an application as complete has been submitted. We are happy to evaluate a draft of your new Application prior to formal submission if so desired. Our specific comments follow, in order of the application requirements as presented in Title 14, Section 783.2.

783.2(a)(1): This section is complete.

783.2(a)(2): This section is complete.

783.2(a)(3): This section is complete.

783.2(a)(4): The Section requires "The location where the project or activity is to occur or to be conducted." The Department understands from the Commission, that the transmission line proposed by the applicant has not been approved by Southern California Edison. Therefore, it seems pre-decisional to request take for the transmission line, if the alignment could change. If "take" is authorized for the transmission line, and it subsequently changes, it would become necessary to reevaluate the Incidental Take Permit for the project.

783.2(a)(5), 782.2(a)(6): These Sections require "An analysis of whether and to what extent the project or activity for which the permit is sought could result in the taking of species to be covered by the permit" and "an analysis of the impacts of the proposed taking". Identifying the extent and impacts of the take is necessary to identify what constitutes full mitigation.

Page 7 of the application states "...of the total 416.11 acres of disturbance (not clear if this includes all transmission line impacts) "approximately 271.84 acres may include vegetation potentially suitable for Mohave ground squirrel (Table 2)." However, Table 2 and in the text on Page 8, states 321.54 acres are identified as suitable habitat for Mohave ground squirrel (*Spermophilus mohavensis*). The applicant should clarify the discrepancy in acres. A more clear identification of total project impacts might clarify this issue. In addition, the Application should include a habitat assessment and map of suitable habitat for Mohave ground squirrel to allow the Department and Commission to evaluate "take".

783.2(a)(7): This section is complete.

783.2(a)(8): This section requires a description of the measures to minimize and fully mitigate the impacts of the proposed taking. The application proposes a mitigation package that includes $1,300 per acre for a management endowment, $250 per acre for habitat enhancement for Habitat Management Lands, and $1,000 per acre for acquisition of Habitat Management Lands. The amount and location of lands proposed for conservation within those Sections is unspecified. It is not clear how the Applicant came to the dollar amounts that are identified; furthermore, the Applicant does not quantify dollar amounts based on total acres of impacts. It is not clear how the Applicant can guarantee preservation of 365.22 acres of habitat in perpetuity with the funds described. The application should demonstrate how preservation of existing land maintains existing population levels and ecological functions despite the net loss of habitat area and connectivity that would result from project implementation. The selection of the mitigation lands must consider that the Project's permanent footprint, and the other proposed projects in the area, may compromise the mitigation lands' potential to fully mitigate the impacts.

All lands proposed for CESA mitigation would need to be protected in perpetuity for conservation purposes. This often is accomplished by transferring fee title on the mitigation

lands to the Department under terms approved by the Department. Alternatively, a Department-approved non-profit organization qualified pursuant to California Government Code section 65965 may hold fee title or a conservation easement over the mitigation lands. In the event an approved non-profit holds title, a conservation easement must be recorded in favor of the Department, in a form approved by the Department; in the event an approved non-profit holds a conservation easement over the mitigation lands, the Department must be named third party beneficiary. In addition, in the case of a conservation easement, the Department would need to have periodic access to the mitigation lands to insure that the terms and conditions of the conservation easement are being met.

Funding to manage mitigation lands in perpetuity is accomplished by establishment of a non-wasting endowment to be held by the Department or a Department approved non-profit organization qualified to hold endowment funds. The endowment must be of an amount sufficient to generate annual interest in the amount necessary to meet expected annual maintenance and monitoring costs of the mitigation lands. The amount of the endowment should be determined by using a Property Analysis Record (PAR) or PAR-like analysis once the mitigation lands are identified. If project implementation is anticipated in advance of conveying the mitigation lands and endowment and enhancement funding, security in the form of a pledged savings account or an irrevocable letter of credit would need to be provided prior to ground-disturbing activities.

Section 783.2(a)(9): This section is complete.

783.2(a)(10): This Section requires a description of the funding source and the level of funding available for implementation of the minimization and mitigation measures. For this project, that would include the cost of acquisition, enhancement, and endowment. The security amount would need to be sufficient to purchase acreage equal to the amount to be set aside for mitigation, and would also need to take into account current land values and inflation. In addition to covering land costs, the security would need to include endowment and enhancement costs determined for the mitigation acreage. The Department will conservatively estimate the required endowment amount if specific mitigation lands and a PAR or PAR-like analysis has not yet been conducted at the time that permitting details must be specified by the Department.

The Department has determined, based on both the Project description, as well as our familiarity with the biological resources present on the Project site and that the Project may result in "take" of State-listed species, that it is appropriate to obtain a State incidental take authorization for this Project prior to commencing any ground-disturbing activities. Thus, any "take" that occurs prior to the issuance of a permit is not authorized. We look forward to working with you towards permit finalization.

General Biological Resources Comments

Burrowing Owl – The Biological Resources Technical Report indicates evidence of burrowing owl (*Athene cunicularia*) within the project site and survey results indicate owls do occur within the project area. Since the Project site could support owls, the Department requires that a qualified biologist conduct a survey no more than 30 days before the onset of any ground-disturbing activities. The Department recommends four separate site visits each conducted on separate days to maximize detection of burrowing owls within appropriate habitat during preconstruction surveys. If burrowing owls occupy the site during the non-breeding season, a passive relocation effort may be instituted. Otherwise, the Department recommends

that projects avoid occupied burrows with a minimum 250-foot no-construction buffer zone, unless a Department-approved biologist verifies through non-invasive methods that either: 1) the birds have not begun egg-laying and incubation; or 2) that juveniles from the occupied burrows are foraging independently and are capable of independent survival. Failure to implement this buffer zone could cause adult burrowing owls to abandon the nest, cause eggs or young to be directly impacted (crushed), and/or result in reproductive failure. Impacts of this nature violate Fish and Game Code Sections 3503, 3503.5, 3513, and the International Migratory Bird Treaty Act.

Desert Tortoise – The proposed project is located within suitable desert tortoise (*Gopherus agassizii*) habitat. Desert tortoise surveys were conducted at the power plant site by AMEC Earth in 2006, 2008, and 2009. The transmission lines were surveyed in 2008, with additional surveys along re-alignment sections in 2009. Based on these survey results, and confirmed in a conference call on May 26th, the Department has determined additional desert tortoise protocol surveys would not be required for the project. However, for areas that supported suitable tortoise habitat, construction surveys, restrictive fencing and monitoring would still be required. In addition, any changes in the transmission line alignment would require subsequent protocol level surveys. The applicant agreed to provide the Department with detailed alignment maps delineating all suitable desert tortoise habitat.

Rare Plants – The Department provided written response to the Commission (Department, 2009) on the Biological Resources Technical Report. The Department provided detailed comments within the report on the deficiencies of the plant surveys for the proposed project. To properly substantiate the lack of sensitive plant species within the project site, plant surveys need to occur throughout the entire alignment and should be completed within the appropriate time of year for each flowering plant. In addition, plant surveys should not be conducted at the same time as other focused surveys (see Attachment 1).

Joshua Tree Woodlands – The project will impact approximately 189.28 acres of Joshua tree woodland. The continual loss of Joshua tree woodland in the Antelope Valley is a concern to the Department as these communities support a high biological diversity. The Department considers Joshua tree woodlands as a threatened vegetative community. Any impacts to Joshua tree woodlands are considered significant. The loss of Joshua tree woodlands as the result of the proposed project should be mitigated below a significant level.

If avoidance of Joshua tree woodland is not feasible, efforts should be made to acquire and protect habitat of equal or superior value and/or acquire and protect areas to be enhanced and/or restored, which will result in fully functional Joshua tree woodland habitat. Mitigation for Joshua tree woodland should be mitigated at a ratio of no less then 1:1 for low quality habitat. Higher mitigation ratios would be required for higher quality habitat. The Department does not acknowledge salvaging and transplanting Joshua trees as a viable mitigation option as there have been no scientifically documented successful cases of transplantation for this species. To adequately mitigate for the loss of Joshua tree woodlands, the Department requires compensatory mitigation in the form of land acquisition. If funding for acquisition of mitigation property is proposed, a property value analysis should be undertaken to quantify acquisition costs sufficient to secure the required acreage of Joshua tree woodland, as well as ensure funding for fencing, maintenance, and monitoring of this property in perpetuity. The applicant should document specific areas where mitigation monies will be spent to mitigate for loss of Joshua tree woodland.

Arroyo Toad – Arroyo toad (*Bufo californicus*) is known to occur within Little Rock Wash. Although it is more likely they will occur above the dam, the Department is concerned toad may be present within the transmission line corridor. At Little Rock Wash, the transmission line access road runs perpendicular across the creek. Two towers are identified on either side of the wash. Because of the potential for toad to occur within the wash and in upland habitat adjacent to the wash, the Department recommends U.S. Fish and Wildlife protocol surveys for arroyo toad occur prior to commencement of construction activities. In addition, a biological monitor knowledgeable in arroyo toad should be present during all ground disturbing activities within 500 feet of the wash.

Questions regarding this letter and further coordination regarding these issues should be directed to Erinn Wilson, Staff Environmental Scientist, at (714) 968-0953.

Sincerely,

Edmund J. Pert
Regional Manager
South Coast Region

Attachment

cc: Matt Amalong
AMEC Earth & Environmental, Inc.
3120 Chicago Avenue, Suite 110
Riverside, CA 92507
Fax #: (951) 369.8035

Misa Milliron
California Energy Commission
Siting Transmission and Environmental Protection Division
1516 Ninth Street - MS 40
Sacramento, CA 95814
Fax #: (916)651-8868

Ray Bransfield
U.S. Fish and Wildlife Service
2493 Portola Road, Suite B
Ventura, CA 93003
Fax #: (805) 644-3958

ec: Department of Fish and Game
SJuarez@dfg.ca.gov
HBirss@dfg.ca.gov
SHarris@dfg.ca.gov
BCourtney@dfg.ca.gov
KSchmoker@dfg.ca.gov
EWilson@dfg.ca.gov
SFlint@dfg.ca.gov

Literature Cited

CBOC, 1993. Burrowing Owl Survey Protocol and Mitigation Guidelines. California Burrowing Owl Consortium, April 1993.
http://www.Department.ca.gov/wildlife/species/docs/boconsortium.pdf

Department, 1995. Staff Report on Burrowing Owl Mitigation. California Department of Fish and Game.
http://www.Department.ca.gov/wildlife/species/docs/burowlmit.pdf

Department, 2000. Guidelines for Assessing Effects of Proposed Projects on Rare, Threatened and Endangered Plants and Natural Communities. California Department of Fish and Game. May, 2000, http://www.Department.ca.gov/biogeodata/cnddb/pdfs/guideplt.pdf

Department, 2009. Comments to California Energy Commission regarding Biological Resources Technical Report, California Department of Fish and Game,
http://www.energy.ca.gov/sitingcases/palmdale/documents/index.html#applicant

Smith, S.D. 1984. Environmental effects of solar thermal power systems: analysis of plant invasion into the Barstow 10MWe pilot STPS. Prepared for US Department of Energy Contract No. DOE-AMO3-76-SF00012.

Smith, S.D., D.T. Patton, and R.K. Monson, 1987. Effects of artificially imposed shade on Sonoran Desert ecosystem: microclimate and vegetation. Journal of Arid Environments 13:65-82.

USFWS, 2000. Guidelines for Conducting and Reporting Botanical Inventories for Federally Listed, Proposed and Candidate Plants. United States Fish and Wildlife Service. January, 2000. http://www.fws.gov/ventura/sppinfo/protocols/botanicalinventories.pdf

Guidelines for Assessing the Effects of Proposed Projects on Rare, Threatened, and Endangered Plants and Natural Communities

State of California
THE RESOURCES AGENCY
Department of Fish and Game
December 9, 1983
Revised May 8, 2000

The following recommendations are intended to help those who prepare and review environmental documents determine **when** a botanical survey is needed, **who** should be considered qualified to conduct such surveys, **how** field surveys should be conducted, and **what** information should be contained in the survey report. The Department may recommend that lead agencies not accept the results of surveys that are not conducted according to these guidelines.

1. Botanical surveys are conducted in order to determine the environmental effects of proposed projects on all rare, threatened, and endangered plants and plant communities. Rare, threatened, and endangered plants are not necessarily limited to those species which have been "listed" by state and federal agencies but should include any species that, based on all available data, can be shown to be rare, threatened, and/or endangered under the following definitions:

   A species, subspecies, or variety of plant is "endangered" when the prospects of its survival and reproduction are in immediate jeopardy from one or more causes, including loss of habitat, change in habitat, over-exploitation, predation, competition, or disease. A plant is "threatened" when it is likely to become endangered in the foreseeable future in the absence of protection measures. A plant is "rare" when, although not presently threatened with extinction, the species, subspecies, or variety is found in such small numbers throughout its range that it may be endangered if its environment worsens.

   Rare natural communities are those communities that are of highly limited distribution. These communities may or may not contain rare, threatened, or endangered species. The most current version of the California Natural Diversity Database's List of California Terrestrial Natural Communities may be used as a guide to the names and status of communities.

2. It is appropriate to conduct a botanical field survey to determine if, or to the extent that, rare, threatened, or endangered plants will be affected by a proposed project when:

   a. Natural vegetation occurs on the site, it is unknown if rare, threatened, or endangered plants or habitats occur on the site, and the project has the potential for direct or indirect effects on vegetation; or
   b. Rare plants have historically been identified on the project site, but adequate information for impact assessment is lacking.

3. Botanical consultants should possess the following qualifications:

   a. Experience conducting floristic field surveys;
   b. Knowledge of plant taxonomy and plant community ecology;
   c. Familiarity with the plants of the area, including rare, threatened, and endangered species;
   d. Familiarity with the appropriate state and federal statutes related to plants and plant collecting; and,
   e. Experience with analyzing impacts of development on native plant species and communities.

4. Field surveys should be conducted in a manner that will locate any rare, threatened, or endangered species that may be present. Specifically, rare, threatened, or endangered plant surveys should be:

   a. Conducted in the field at the proper time of year when rare, threatened, or endangered species are both evident and identifiable. Usually, this is when the plants are flowering.

When rare, threatened, or endangered plants are known to occur in the type(s) of habitat present in the project area, nearby accessible occurrences of the plants (reference sites) should be observed to determine that the species are identifiable at the time of the survey.

b. Floristic in nature. A floristic survey requires that every plant observed be identified to the extent necessary to determine its rarity and listing status. In addition, a sufficient number of visits spaced throughout the growing season are necessary to accurately determine what plants exist on the site. In order to properly characterize the site and document the completeness of the survey, a complete list of plants observed on the site should be included in every botanical survey report.

c. Conducted in a manner that is consistent with conservation ethics. Collections (voucher specimens) of rare, threatened, or endangered species, or suspected rare, threatened, or endangered species should be made only when such actions would not jeopardize the continued existence of the population and in accordance with applicable state and federal permit requirements. A collecting permit from the Habitat Conservation Planning Branch of DFG is required for collection of state-listed plant species. Voucher specimens should be deposited at recognized public herbaria for future reference. Photography should be used to document plant identification and habitat whenever possible, but especially when the population cannot withstand collection of voucher specimens.

d. Conducted using systematic field techniques in all habitats of the site to ensure a thorough coverage of potential impact areas.

e. Well documented. When a rare, threatened, or endangered plant (or rare plant community) is located, a California Native Species (or Community) Field Survey Form or equivalent written form, accompanied by a copy of the appropriate portion of a 7.5 minute topographic map with the occurrence mapped, should be completed and submitted to the Natural Diversity Database. Locations may be best documented using global positioning systems (GPS) and presented in map and digital forms as these tools become more accessible.

5. Reports of botanical field surveys should be included in or with environmental assessments, negative declarations and mitigated negative declarations, Timber Harvesting Plans (THPs), EIR's, and EIS's, and should contain the following information:

a. Project description, including a detailed map of the project location and study area.
b. A written description of biological setting referencing the community nomenclature used and a vegetation map.
c. Detailed description of survey methodology.
d. Dates of field surveys and total person-hours spent on field surveys.
e. Results of field survey including detailed maps and specific location data for each plant population found. Investigators are encouraged to provide GPS data and maps documenting population boundaries.
f. An assessment of potential impacts. This should include a map showing the distribution of plants in relation to proposed activities.
g. Discussion of the significance of rare, threatened, or endangered plant populations in the project area considering nearby populations and total species distribution.
h. Recommended measures to avoid impacts.
i. A list of all plants observed on the project area. Plants should be identified to the taxonomic level necessary to determine whether or not they are rare, threatened or endangered.
j. Description of reference site(s) visited and phenological development of rare, threatened, or endangered plant(s).
k. Copies of all California Native Species Field Survey Forms or Natural Community Field Survey Forms.
l. Name of field investigator(s).
j. References cited, persons contacted, herbaria visited, and the location of voucher specimens.

STATE OF CALIFORNIA-THE RESOURCES AGENCY ARNOLD SCHWARZENEGGER, Governor

DEPARTMENT OF FISH AND GAME

FACSIMILE TRANSMITTAL

TO:

City of Palmdale
c/o Ms. Sara Head
AECOM Environment
1220 Avenida Acaso
Camarillo, California 93012
Office: 805-388-3775
Fax: 805-388-3577
Sara.head@aecom.com

Matt Amalong
AMEC Earth & Environmental, Inc.
3120 Chicago Avenue, Suite 110
Riverside, CA 92507
(F) 951.369.8035

Misa Milliron
California Energy Commission
Siting Transmission and Environmental Protection Division
1516 Ninth Street - MS 40
Sacramento, CA 95814
fax: 916-651-8868

Ray Bransfield
U.S. Fish and Wildlife Service
2493 Portola Road, Suite B
Ventura, CA 93003
fax: 805-644-3958

FROM:

Edmund J. Pert
South Coast Region
4949 Viewridge Ave.
San Diego, California 92123
Telephone (858) 467-4201
Fax (858) 467-4239

DATE: 6-10-09 **TIME:** _____

 # OF PAGES SENT INCLUDING TRANSMITTAL SHEET 8

COMMENTS:

Attached are the Departments Comments on the Palmdale Hybrid Power Plant Request for Incidental Take Permit for Mohave Ground Squirrel and Additional Comments Regarding Impacts to Biological Resources. CEC Docket 08-AFC-09

IF YOU DO NOT RECEIVE ALL OF THE PAGES INDICATED PLEASE CALL THE SENDER AS SOON AS POSSIBLE.

BEFORE THE ENERGY RESOURCES CONSERVATION AND DEVELOPMENT COMMISSION OF THE STATE OF CALIFORNIA
1516 NINTH STREET, SACRAMENTO, CA 95814
1-800-822-6228 – WWW.ENERGY.CA.GOV

APPLICATION FOR CERTIFICATION
For the *PALMDALE HYBRID POWER PROJECT*

Docket No. 08-AFC-9

PROOF OF SERVICE
(Revised 4/30/2009)

APPLICANT

Thomas M. Barnett
Executive Vice President
Inland Energy, Inc.
3501 Jamboree Road
South Tower, Suite 606
Newport Beach, CA 92660
tbarnett@inlandenergy.com

Antonio D. Penna Jr.
Vice President
Inland Energy
4390 Civic Drive
Victorville, CA 92392
tonypenna@inlandenergy.com

Laurie Lile
Assistant City Manager
City of Palmdale
38300 North Sierra Highway, Suite A
Palmdale, CA 93550
llile@cityofpalmdale.org

APPLICANT'S CONSULTANTS

Sara Head, Vice President
ENSR Corporation
1220 Avenida Acaso
Camarillo, CA 93012
SHead@ensr.aecom.com

COUNSEL FOR APPLICANT

Michael J. Carroll
Marc Campopiano
Latham & Watkins, LLP
650 Town Center Drive, Ste. 2000
Costa Mesa, CA 92626
michael.carroll@lw.com
marc.campopiano@lw.com

INTERESTED AGENCIES

*Michael R. Plaziak, Manager
Lahontan Regional
Water Quality Control Board
14440 Civic Drive, Suite 200
Victorville, CA 92392-2306
mplaziak@waterboards.ca.gov

Rick Buckingham
3310 El Camino Avenue, LL-90
State Water Project
Power & Risk Office
Sacramento, CA 95821
E-mail preferred
rbucking@water.ca.gov

Manuel Alvarez
Robert J. Tucker
SoCal Edison
1201 K Street
Sacramento, CA 95814
Manuel.Alvarez@sce,com
Robert.Tucker@sce.com

California ISO
e-recipient@caiso.com

ENERGY COMMISSION

JEFFREY D. BYRON
Commissioner and Presiding Member
jbyron@energy.state.ca.us

ARTHUR H. ROSENFELD
Commissioner and Associate Member
pflint@energy.state.ca.us

Paul Kramer
Hearing Officer
pkramer@energy.state.ca.us

Felicia Miller
Project Manager
fmiller@energy.state.ca.us

Caryn Holmes
Staff Counsel
cholmes@energy.state.ca.us

Elena Miller
Public Adviser
publicadviser@energy.state.ca.us

*indicates change

DECLARATION OF SERVICE

I, Teraja` Golston, declare that on June 11, 2009, I served and filed copies of the attached Palmdale Hybrid (08-AFC-9) CDFG Comments: PHPP Incidental Take Request. The original document, filed with the Docket Unit, is accompanied by a copy of the most recent Proof of Service list, located on the web page for this project at: **[http://www.energy.ca.gov/sitingcases/palmdale/index.html]**. The document has been sent to both the other parties in this proceeding (as shown on the Proof of Service list) and to the Commission's Docket Unit, in the following manner:

(*Check all that Apply*)

For service to all other parties:

_x_ sent electronically to all email addresses on the Proof of Service list;

_x_ by personal delivery or by depositing in the United States mail at Sacramento, California with first-class postage thereon fully prepaid and addressed as provided on the Proof of Service list above to those addresses **NOT** marked "email preferred."

AND

For filing with the Energy Commission:

_x_ sending an original paper copy and one electronic copy, mailed and emailed respectively, to the address below (preferred method);

OR

_____depositing in the mail an original and 12 paper copies, as follows:

CALIFORNIA ENERGY COMMISSION
Attn: Docket No. 08-AFC-9
1516 Ninth Street, MS-4
Sacramento, CA 95814-5512

docket@energy.state.ca.us

I declare under penalty of perjury that the foregoing is true and correct.

Original Signature in Dockets
Teraja` Golston

*indicates change

ATTACHMENT 3

Phillips 66 Delivers on Advantaged Crude Strategy

Phillips 66 is steadily making a number of commitments to transportation infrastructure to deliver advantaged, or lower cost, crude oil to its U.S. refineries, resulting in significant cost savings and increased profitability for the company.

The company's biggest operating cost by far is the purchase of approximately 2 million barrels of crude oil per day (BPD), or 730 million barrels per year -- enough oil to fill Reliant Stadium in Houston 29 times. With crude oil prices fluctuating between $90 and $120 per barrel, that equates to more than $80 billion a year for crude oil purchases.

"Crude oil and energy consumption account for approximately 70 percent of our refining business' cost structure," said Chairman and Chief Executive Officer Greg Garland. "The single biggest lever we have to improve value in our refining business is through lowering our feedstock costs. A savings of $1 per barrel across our refining system is worth about $450 million of net income to us."

- **Recent Advantaged Crude Activities**
- **Advantaged Crude by the Numbers**
- **Delivery Taken on First Railcars**

"The single biggest lever we have to improve value in our refining business is through lowering our feedstock costs. A savings of $1 per barrel across our refining system is worth about $450 million of net income to us."

Advantaged crude oil sells at a discount relative to crude oils tied to the global benchmark, North Sea Brent crude. For Phillips 66, advantaged crude oil includes heavy crude oil from Canada and Latin America, lighter Canadian grades, and West Texas Intermediate (WTI). Increasingly, it also includes shale crude oil from places like the Bakken in North Dakota and the Eagle Ford in Texas. The price for U.S. shale crude is typically tied to the WTI domestic benchmark which has recently been trading $20 less per barrel than Brent crude.

"Running more advantaged crude oil in our refineries allows us to run less of the more expensive globally priced crude oils," said Garland. "This is a key element of the company's strategy for enhancing returns on capital and we think we can drive 2 to 3 percent improvement on our return on capital employed for our Refining business by incorporating more advantaged crude oil into our supply."

In the fourth quarter of 2012, 67 percent, or about 1 million BPD, of Phillips 66's U.S. refining crude slate was considered advantaged crude oil – most of it WTI and heavy crude from Canada and Latin America, along with about 135,000 BPD of shale oil. By 2017, the company expects to be processing 500,000 BPD of new or increasingly advantaged crude oils.

The challenge for refiners like Phillips 66 is getting the advantaged crude oil to the refineries that are equipped to process it. While vast resources of advantaged crude oil are being produced in Canada and in the United States, there is not enough pipeline capacity in the right locations to carry the oil to where it's needed.

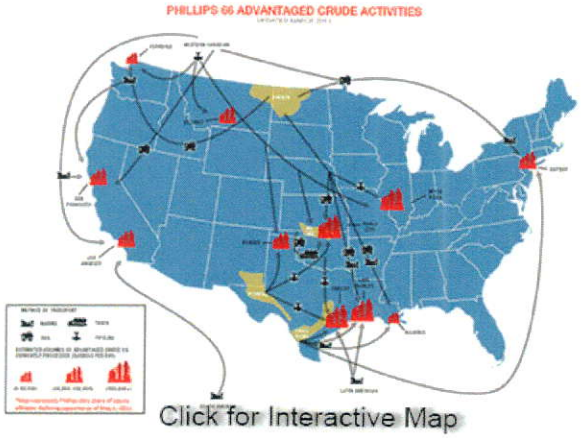

A number of pipeline projects that are planned or already under way could significantly increase the volumes of advantaged crude oil available to refineries in the Midcontinent and Gulf Coast regions, such as the proposed Keystone XL pipeline, the Seaway pipeline reversal and expansion, the Ho-Ho pipeline reversal and others. In the meantime, Phillips 66 is seeking alternative means to transport advantaged crude oil to its refineries.

"We are looking at pipe, rail, truck, barge and ship -- just about any way we can get advantaged crude to the front end of the refineries," said Garland.

Phillips 66 has established a cross-functional team from its Business Development, Commercial, Refining and Transportation businesses to develop strategies for accessing and moving advantaged crude oil into its refineries. This team has moved quickly to complete a number of logistics and supply agreements with third parties over the past 12 months as well as identified opportunities to grow existing wholly owned transportation assets that supply the refineries.

"Until new pipeline projects come online, rail is in many cases the easiest and most cost efficient way to get advantaged crude to some of our refineries"

"Until new pipeline projects come online, rail is in many cases the easiest and most cost efficient way to get advantaged crude to some of our refineries," said Jay Clements, manager, Business Development, and leader of the advantaged crude strategy team. "New rail projects can be built much faster than pipelines, allowing quicker access to the new and growing shale plays. However, our refineries are not currently set up to take delivery of large volumes of crude oil from trains, so we're looking at building rail offloading facilities at several refineries including the Bayway Refinery in Linden, N.J., and the Ferndale, Wash., refinery."

Phillips 66 has secured access to a third-party rail loading facility in North Dakota and the company has received the first batch of railcars from the 2,000 ordered in 2012. These railcars initially will be used to deliver Bakken crude oil west to the Ferndale Refinery and east to the Bayway Refinery.

The company is already processing 75,000 BPD of Bakken crude oil at Bayway and is processing smaller volumes of Bakken crude at Ferndale, with plans to significantly grow those volumes as the new rail car fleet is delivered. The oil is being delivered through third-party rail facilities and then by barge to the refineries. A proposed new rail offloading facility planned for Bayway would enable the delivery of 70,000 barrels per day of Bakken crude directly into the refinery. Smaller volumes of Bakken crude also are being delivered to the company's Midcontinent refineries via existing pipeline systems and to its Gulf Coast refineries through a combination of rail, pipelines and barges.

"Our U.S. refining network occupies the broadest geographic footprint within our peer group which we think gives us a competitive advantage. It's a great platform for capturing advantaged feedstock"

The Ponca City Refinery in Oklahoma is situated on top of the Mississippian Lime formation and the company has signed an agreement with a third-party pipeline operator to supply the refinery with approximately 20,000 BPD of crude oil from this local source. In addition, the company is enhancing its own transportation facilities that will enable delivery of another 40,000 BPD of Mississippian Lime crude oil to Ponca City by mid-2014.

The Sweeny Refinery in Texas is in close proximity to the Eagle Ford shale and another recent pipeline agreement will supply up to 30,000 BPD of Eagle Ford crude oil to that refinery beginning in 2014. Eagle Ford crude oil also is being delivered to Phillips 66's Gulf Coast refineries and to the Bayway Refinery via barges and tankers. The company recently signed time charter agreements for two medium-range U.S.-flagged tankers that supply Eagle Ford crude oil to the Bayway Refinery, the Alliance Refinery in Louisiana and potentially the company's other Gulf Coast refineries.

While many of Phillips 66's U.S. refineries are already processing some advantaged crudes, the company is making small modifications to several refineries, including the Lake Charles Refinery in Louisiana and the Ponca City, Sweeny, Alliance and Wood River refineries that will enable those facilities to process even more advantaged crude oil. The next challenge for the company is identifying strategies to get more advantaged crude oil to its California refineries.

"The California refineries are capable of running a wide range of crude oils which creates opportunities throughout North America to supply California if we can find a cost effective mode of transportation," says Clements.

Garland believes the geographic diversity of the company's U.S. refining network, especially the company's significant presence in the Midcontinent and Gulf Coast regions, is a major strength and positions the company to be able to benefit from advantaged crude sources for years to come.

"Our U.S. refining network occupies the broadest geographic footprint within our peer group which we think gives us a competitive advantage. It's a great platform for capturing advantaged feedstock," said Garland. "Over the next several years, we are expecting 2 to 3 million barrels a day of light, sweet crude coming out of new U.S. shale plays and ultimately there will be 2 to 3 million barrels a day of Canadian heavy crude oil that comes south. We're going to make investments in infrastructure and aggressively pursue every angle we can to ensure we can bring as much advantaged crude as possible to our refineries."

CAUTIONARY STATEMENT FOR THE PURPOSES OF THE "SAFE HARBOR" PROVISIONS OF THE PRIVATE SECURITIES LITIGATION REFORM ACT OF 1995

This story contains certain forward-looking statements within the meaning of Section 27A of the Securities Act of 1933, as amended, and Section 21E of the Securities Exchange Act of 1934, as amended, which are intended to be covered by the safe harbors created thereby. Words and phrases such as "is anticipated," "is estimated," "is expected," "is planned," "is scheduled," "is targeted," "believes," "intends," "objectives," "projects," "strategies" and similar expressions are used to identify such forward-looking statements. However, the absence of these words does not mean that a statement is not forward-looking. Forward-looking statements relating to Phillips 66's operations (including joint venture operations) are based on management's expectations, estimates and projections about the company, its interests and the energy industry in general on the date this story was prepared. These statements are not guarantees of future performance and involve certain risks, uncertainties and assumptions that are difficult to predict. Therefore, actual outcomes and results may differ materially from what is expressed or forecast in such forward-looking statements. Factors that could cause actual results or events to differ materially from those described in the forward-looking statements include fluctuations in crude oil, NGL, and natural gas prices, refining and marketing margins and margins for our chemicals business; unexpected changes in costs for constructing, modifying or operating our facilities; unexpected difficulties in manufacturing, refining or transporting our products; lack of, or disruptions in, adequate and reliable transportation for our crude oil, natural gas, NGL, and refined

products; potential liability for remedial actions, including removal and reclamation obligations, under environmental regulations; potential liability resulting from litigation; limited access to capital or significantly higher cost of capital related to illiquidity or uncertainty in the domestic or international financial markets; and other economic, business, competitive and/or regulatory factors affecting Phillips 66's businesses generally as set forth in our filings with the Securities and Exchange Commission, including our filings with the Securities and Exchange Commission. Phillips 66 is under no obligation (and expressly disclaims any such obligation) to update or alter its forward-looking statements, whether as a result of new information, future events or otherwise.

© Phillips 66 Company. All rights reserved. Legal Terms and Privacy Statement. California Transparency in Supply Chains Disclosure.

| Contact Us

ATTACHMENT 4

BAKKEN Breakout

DERAILMENT

Two trains involved in derailment near Casselton

NOVEMBER 14, 2014 8:03 AM • BY ADRIAN GLASS-MOORE, FORUM NEWS SERVICE

CASSELTON, N.D. – For the second time in under a year, two BNSF Railway trains have derailed just west of Casselton.

"Welcome to Casselton, again," is how Casselton Fire Chief Tim McLean greeted reporters at a news conference following Thursday night's incident.

No one was injured when 12 or 13 empty crude oil cars from a westbound train and an unknown number of cars from an eastbound train carrying lumber derailed, McLean said.

"We dodged a bullet again," said Casselton Mayor Lee Anderson, recalling the fiery explosion last December when a BNSF train carrying oil derailed west of here.

The mayor said he felt "disappointment" overall at Thursday's incident, but was "pleased that it happened out of town and didn't cause any serious problems like it did last time."

Authorities found no hazardous materials or leaking tanker cars Thursday, McLean said. Lumber was scattered in the area, he said.

"There was severe track damage," McLean said. "I'm sure they'll be replacing the rails on both tracks."

Authorities don't know which train caused the derailment, said McLean, who added that BNSF will investigate the cause of the derailment.

Propane tanks on BNSF property were struck in the derailment, but do not appear to be compromised, a news release from the Sheriff's Department said.

"Fortunately, this one here turned out better than last year's," McLean said.

Cass County sheriff's deputies and other officials responded at 5:34 p.m. to a report of a derailment in the 3500 block of 153rd Avenue Southeast, near the Tharaldson Ethanol plant.

Steve Fox said he was working on the nearby McIntyre Pyle farm when the trains derailed.

Fox and his co-workers went out to retrieve two pickup trucks from a field about 5:30, he said.

"There was an eastbound train and I saw sparks off the last car of the eastbound train, so I assume that was the breaks," he said.

As soon as Fox noticed tanker cars on the westbound side of the tracks, he and his co-workers quickly left because the memory of the explosion in December was still fresh, he said.

Fox said his reaction was, "Let's get the pickup and let's get the heck out of here."

Last Dec. 30, a BNSF train hauling crude oil from western North Dakota derailed about a half-mile west of Casselton, causing a massive explosion. No one was hurt in the explosion, though it has prompted increased calls for safety in shipping oil by rail.

In the December derailment, 13 cars from a westbound soybean train derailed, and one of the derailed cars ended up on the adjacent track. An oncoming train hauling crude oil struck the derailed train, causing the two lead locomotives of the oil train and its first 21 cars to derail. In addition to the 20 oil-carrying tank cars, a train car carrying sand also derailed. In all, the soybean train had 112 cars and the oil train had 106 cars.

A National Transportation Safety Board report on the derailment said the soybean train was traveling about 28 mph when the crew applied emergency brakes. The oil train was going about 43 mph when the crew applied emergency brakes, and its estimated speed at the time of the crash was only 1 mph slower, 42 mph.

"We have a lot of things go through, a lot of them are oil, a lot of them are I don't know what," Anderson said Thursday night. "That's obviously a concern. … They go through fast and they've wanted to go through faster."

Anderson said his city's request that trains go no faster than 40 mph within city limits has been respected.

"We can't do anything outside of city limits," where the two recent derailments took place, said Anderson, who took over as mayor in June. The city doesn't even "have the authority to enforce the speed limit" in the city, he said.

Attachment 5

THE WALL STREET JOURNAL.

OW JONES

WEDNESDAY, JANUARY 15, 2014 ~ VOL. CCLXIII NO. 12 WSJ.com ★★★★ $2.00

JIA 16373.86 ▲ 115.92 0.7% NASDAQ 4183.02 ▲ 1.7% NIKKEI 15422.40 ▼ 3.1% STOXX600 331.23 ▲ 0.2% 10-YR. TREAS. ▼ 12/32, yield 2.869 OIL $92.59 ▲ $0.79 GOLD $1,245.20 ▼ $5.70 EURO $1.3679 YEN 104.21

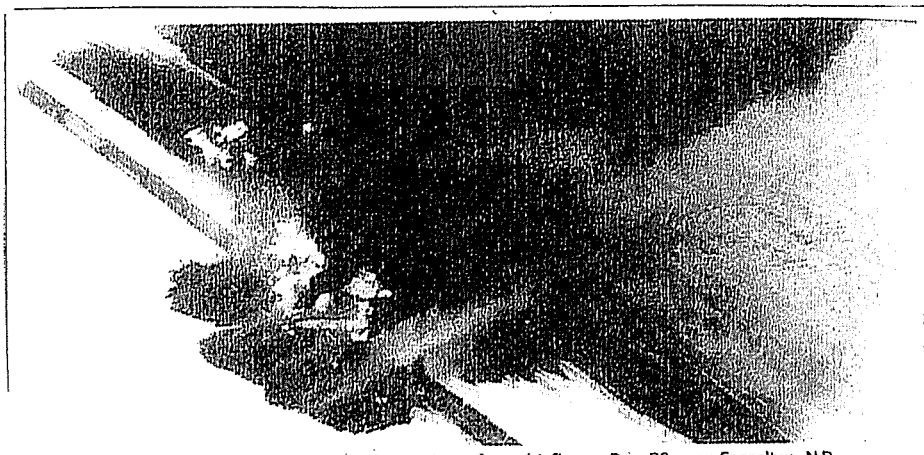

The Forum/Associated Press

A train carrying crude oil collided with another train and caught fire on Dec. 30 near Casselton, N.D.

Cities Grapple With Oil-Train Safety

By Russell Gold
And Lynn Cook

Every day, a train more than a mile long travels alongside a highway in Albany, N.Y., a half mile from the state capitol building and even closer to houses. Its cargo is crude oil from North Dakota, which federal regulators and railroads fear is more explosive than other oils.

In the past year, Albany has become an unlikely hub for the U.S. oil business, taking in shipments by rail and sending them out by ship down the Hudson River to refineries. Now officials there are trying to get up to speed on how to handle a potential oil-train accident, as are their peers from Chicago to Denver to New Orleans.

Railroad officials don't like to talk about it, but oil trains are rumbling through many large cities because of surging output from North Dakota's Bakken shale. Functioning as pipelines on rails, tanker cars full of oil pass through Detroit, Philadelphia, Toronto, St. Louis, Kansas City and Houston, among others.

Bakken crude, which has been involved in three major explosions after rail accidents in the past seven months, is traveling to every corner of the country: west into Washington state and then south to refineries near Los Angeles; south to Gulf Coast refiners; north into Canada; and east to refineries in New Jersey and Philadelphia.

Railroads and oil shippers wouldn't detail oil-train movements through their networks, citing security concerns. The Wall Street Journal identified routes through investor presentations and industry marketing material, as well as interviews with industry officials and experts.

The four major freight railroads involved—Union Pacific Corp., BNSF Railway Co., Canadian Pacific Railway Ltd. and Canadian National Railway Co.—all said they were sharing information about hazardous shipments with local emergency responders. Crude oil is classified as a hazardous substance.

Some critics worry about local preparedness. The growth in crude moving on railroads "came out of the blue," said Peter Iwanowicz, a former head of New York state's environmental agency and now executive director of a watchdog group called Environmental Advocates of New York.

"We're not an oil-patch state," he said. Officials may be aware of the oil trains, he added, "but are they prepared? I don't believe so."

John Layton, a captain in the Albany County Office of Emergency Management, said his agency recently met with Canadian Pacific and Global Partners LP, the storage and distribution firm that is shipping North Dakota crude through New York state.

"The crude trains are very big and carry a lot of potential fuel," Mr. Layton said. "It has the potential to burn a long time."

Global Partners, a public company based in Waltham, Mass., declined to comment.

Two local officials said Chicago, the largest rail hub in the U.S., might not be prepared for an oil-train accident. On Monday, Chicago Aldermen Edward Burke and Matthew O'Shea proposed levying a fee on every oil-filled railcar that passes through the city, to build up a fund that could be tapped in case of a derailment or fire in the city. Local officials can't bar oil trains, which are regulated by the federal government.

Some cities say they are ready for the oil-train influx. One is Tacoma, Wash., where the fire department says it has a plan, personnel and equipment, but worries about suburban and rural fire departments.

The three explosions stemming from recent oil-train derailments include a July accident in Lac-Mégantic, Quebec, that incinerated the downtown and left 47 people dead. An oil train caught fire in Alabama in November, and a Dec. 30 accident in rural North Dakota sent towering flames into the sky. Neither of those two caused injuries.

Concerns about emergency responders helped prompt the federal Pipeline and Hazardous Materials Safety Administration, or PHMSA, to warn that Bakken oil appeared to be more volatile than other crudes, which can burn but seldom have exploded. Dominique Dostie, a firefighter who fought the Lac-Mégantic blaze, said it took 30 hours of applying special foam to extinguish it.

"When emergency responders look at crude, they are thinking of a heavy crude that just sits there and is hard to ignite," said Cynthia Quarterman, head of the federal agency, part of the U.S. Department of Transportation.

The PHMSA is investigating whether Bakken crude might contain large amounts of gases and related liquids such as butane, propane and ethane.

At the American Petroleum Institute, "We look forward to reviewing PHMSA's findings as part of a continuing effort to improve the safety of rail transportation," said a spokesman, Brian Straessle.

New regulations that could require the industry to improve, phase out or retrofit tank cars used to haul some crude oil are over a year away, according to a schedule the Transportation Department published Tuesday.

Shale to Rail

The volume of oil moving on major U.S. railroads has expanded dramatically

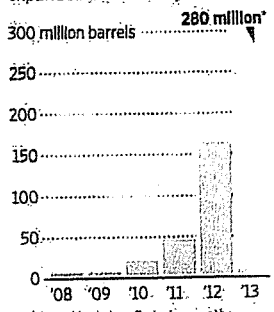

*Projected based on first nine months of the year

Source: Association of American Railroads

The Wall Street Journal

The U.S. and Canada both have large refineries on their coasts to handle imported crude oil. Over the past five years, U.S. companies began pumping more oil from the landlocked midcontinent, and the industry has developed new ways of moving it to refineries.

The most common new mode is rail, which is handling about 750,000 barrels a day from North Dakota—more oil than comes out of the giant Alaska North Slope oil field.

New crude-by-rail projects have been proposed across the country. In New York, state officials said they have received applications from Global Partners to build another rail-to-river facility capable of handling one train a day in New Windsor, N.Y., about 65 miles up the Hudson from New York City.

In Vancouver, Wash., refiner Tesoro Corp. and logistics firm Savage Cos. have proposed building a railroad terminal that could handle 360,000 barrels a day, twice the size of the oil terminal in Albany.

'This crude is coming through the area and we don't really know what it is,' said the fire chief of St. Louis.

Barry Cain, lead developer of Columbia Waterfront LLC, a $1.3 billion real-estate revitalization project in Vancouver with space 100 feet from the tracks, said he supports robust U.S. oil production but fears the trains would endanger residents. "What if one derails?" he asked. "There is no margin of error with these things."

The general manager of the proposed new rail terminal, Jared Larrabee, said it and waterfront development can co-exist. "We believe the region can and should have both," he said.

Vancouver Fire Dept. Battalion Chief Steve Eldred said hazardous-materials response plans are in place for existing train traffic, but would need to be studied and probably require additional resources to handle more oil trains.

Others say while the liquid cargo is labeled as crude, it is exploding like jet fuel. The North Dakota crude "has a tremendous amount volatility and puts out a lot of heat," said Dennis Jenkerson, the fire chief for St. Louis.

"We train for this every year, and you prepare for the worst," he said. "My biggest concern is that this crude is coming through the area and we really don't know what it is."

—Chester Dawson, Ben Kesling and Betsy Morris contributed to this article.

Attachment 6

SET EDITION: U.S. | INTERNATIONAL | MÉXICO | ARABIC
TV: CNN | CNNi | CNN en Español | HLN

CNN U.S.

Sign up | Log in
SEARCH

Home | TV & Video | CNN Trends | U.S. | World | Politics | Justice | Entertainment | Tech | Health | Living | Travel | Opinion | iReport | Money | Sports

North Dakota train collision ignites oil cars; fire to burn out

By **Steve Almasy**, CNN
updated 10:05 PM EST, Mon December 30, 2013

SHARE THIS
Print
Email
More sharing
Recommend 1.2k

Source: CNN

STORY HIGHLIGHTS

- **NEW:** Sheriff urges residents to leave town because winds are expected to shift
- Fire will take 12 hours to burn itself out
- Officials aren't sure if one train derailed before the accident
- Smoke can be seen in Fargo, 25 miles away

ADVERTISEMENT
360 Savings℠
Capital One 360
MEMBER FDIC

(CNN) -- A wreck involving two trains, one of which was carrying crude oil, sparked a large fire Monday that sent huge flames and dangerous smoke into the sky, North Dakota authorities said.

There were no reports of injuries from the accident, said Sgt. Tara Morris with the Cass County Sheriff's Office, but "with the oil on fire there are hazardous conditions, and we are directing all people in the area to shelter in-place and stay indoors."

Firefighters will be forced to let the fire burn out, which may take as long as 12 hours from the time of the accident (2:12 p.m. CT), because they cannot get close enough to the flames, she told CNN.

The incident occurred one mile west of Casselton, a town of 2,300 residents about 25 miles west of Fargo. Huge plumes of smoke could be seen in Fargo, Morris said.

The sheriff's office advised all residents in Casselton and two nearby townships to evacuate because the winds were shifting due to a high -pressure system.

A Red Cross shelter in Fargo was available, the sheriff's office said.

Morris said it was unclear how the accident happened and authorities are trying to determine whether one of the trains derailed before they collided.

About 10 of the cars on the train carrying oil were fully engulfed in flames. At least a dozen firefighters are involved, she said.

An official with the Federal Railroad Administration said it will support a National Transportation Safety Board investigation of the accident.

CNN's Aaron Cooper and Carma Hassan contributed to this report.

552
Comments »

SHARE THIS
Print
Email

Robin Roberts

South Sudan

Michael Schumacher

Palestinian Prison...

More from CNN Video:

'I just knew the bus had to stop'

Caught on camera: Driver tosses package

Cyrus video leaves little to imagination

This woman does WHAT for a living?

How do Icebreakers get stuck?

Video shows shocking 'knockout' attack

More from CNN:

Attachment 7

Print Close

Evacuation lifted for Casselton, ND following fiery train derailment

Published December 31, 2013 | FoxNews.com

CASSELTON, N.D. – A southeastern North Dakota town narrowly escaped tragedy when a train carrying crude oil derailed and exploded nearby, the mayor said Tuesday, calling for changes in how the fuel is transported across the United States.

No one was hurt in Monday's derailment of the mile-long train that sent a great fireball and plumes of black smoke skyward about a mile from the small town of Casselton. The fire had been so intense as darkness fell that investigators couldn't get close enough to count the number of burning cars.

Worries about the smoke plume prompted officials to ask Casselton's 2,400 residents to voluntarily evacuate Monday evening, and most did. The recommendation was lifted Tuesday afternoon, but officials were urging residents south of the derailment to remain vigilant about changing conditions, Cass County Commissioner Ken Pawluk said.

Residents said the blasts endured for hours after the derailment, shaking their homes and businesses. A BNSF spokeswoman said 18 tanker cars burned.

Pawluk estimated that the fire was about 80 to 90 percent burned out by Tuesday afternoon.

National Transportation Safety Board officials on the scene said the agency's investigation would examine the train recorder, the signal system, the condition of the train operators, train and tracks, as well as the response to the derailment.

Board member Robert Sumwalt said the tankers involved were DOT-111s, a model that has shown a tendency to rupture in other accidents, but he said it wasn't immediately clear if they were newer, safer DOT-111s or the older models.

The rail tracks run straight through the middle of Casselton, a town of 2,400 people about 25 miles west of Fargo. Mayor Ed McConnell estimated that dozens of people could have been killed if the derailments had happened within the town. He said it is time to "have a conversation" with federal lawmakers about the dangers of transporting oil by rail.

"There have been numerous derailments in this area," he told The Associated Press. "It's almost gotten to the point that it looks like not if we're going to have an accident, it's when. We dodged a bullet by having it out of town, but this is too close for comfort."

A train carrying crude from North Dakota's Bakken oil patch crashed in Quebec last summer, bursting into flames and killing 47 people.

Shipping oil by pipeline has to be a safer option, McConnell said Tuesday.

North Dakota is the No. 2 oil-producing state in the U.S., trailing only Texas. The state's top oil regulator said earlier this month that he expected as much as 90 percent of North Dakota's oil to be carried by train in 2014, up from 60 percent.

Ron Ness, president of the North Dakota Petroleum Council, called the derailment "extremely unfortunate."

"We're glad no one was hurt," said Ness, whose Bismarck-based group represents several hundred companies working in the state's oil patch. "I certainly think we'll see some continued efforts on safety to the rail system and rail cars."

North Dakota oil drillers increasingly use trains to ship crude to locations not served by pipelines, in part because of the difficulty in securing permits for the structures, Ness said.

"For every action, there is a reaction or counter-action," he said. "Getting any product to market from North Dakota always has been a challenge, whether it is oil, sugar beets or beef. And we have been able to find good markets because the rail industry has responded."

The number of crude oil carloads hauled by U.S. railroads surged from 10,840 in 2009 to a projected 400,000 this year. Despite the increase, the rate of accidents has stayed relatively steady. Railroads say 99.997 percent of hazardous materials shipments reach destinations safely.

Authorities haven't yet been able to untangle exactly what caused the derailment. BNSF spokeswoman Amy McBeth said another train carrying grain derailed first, and that this knocked several cars of the oil train off adjoining tracks.

BNSF said each train comprised more than 100 cars.

Print Close

URL

http://www.foxnews.com/us/2013/12/31/no-injuries-reported-in-fiery-north-dakota-train-derailment/

Home | Video | Politics | U.S. | Opinion | Entertainment | Tech | Science | Health | Travel | Lifestyle | World | Sports | Weather

Privacy | Terms

This material may not be published, broadcast, rewritten, or redistributed. © 2014 FOX News Network, LLC. All rights reserved. All market data delayed 20 minutes.

Attachment 8

Ad
Open in December Get Ready 95 ExpressLanes

Dr. Gridlock

Train derails in downtown Lynchburg, leaving crude burning on James River

360 Savings Account NO MINIMUMS START SAVING EARN INTEREST Member FDIC

A 14

By Michael Laris and Peter Hermann April 30

Follow @mikelaris Follow @phscoop

Advertisement

Train derails in Lynchburg, Va. (0:12)

Authorities are investigating a train derailment and fire near downtown Lynchburg, Va. (Instagram/sherifelipe)

(This post has been updated.)

A CSX freight train derailed Wednesday afternoon in downtown Lynchburg, spilling rail cars and burning crude into the James River and causing major environmental damage, a city official said.

"The river was on fire," said deputy city manager Bonnie Svrcek.

Despite the fouled waterway spewing black smoke, evacuations of several businesses and apartments, and the shut down of nearby roads and a bridge, Lynchburg officials considered the city lucky.

"We are very fortunate that the cars that derailed derailed toward the river, instead of toward the city," said Svrcek, adding that three rail cars fell into the river but no buildings caught fire and no injuries were reported. Virginia environmental and emergency officials were on site, and federal safety officials were en route, she said.

CSX said the train was traveling from Chicago to a destination in Virginia, and that roughly 15 cars derailed, about three of which were engulfed in the blaze.

Svrcek said the cause of the crash remains under investigation.

Several recent accidents in North America have raised concerns about the safety of oil being shipped by rail. A train carrying crude derailed and exploded in a small town in Quebec last summer, killing 47 people. In December, hundreds of people were evacuated after a mile-long train,

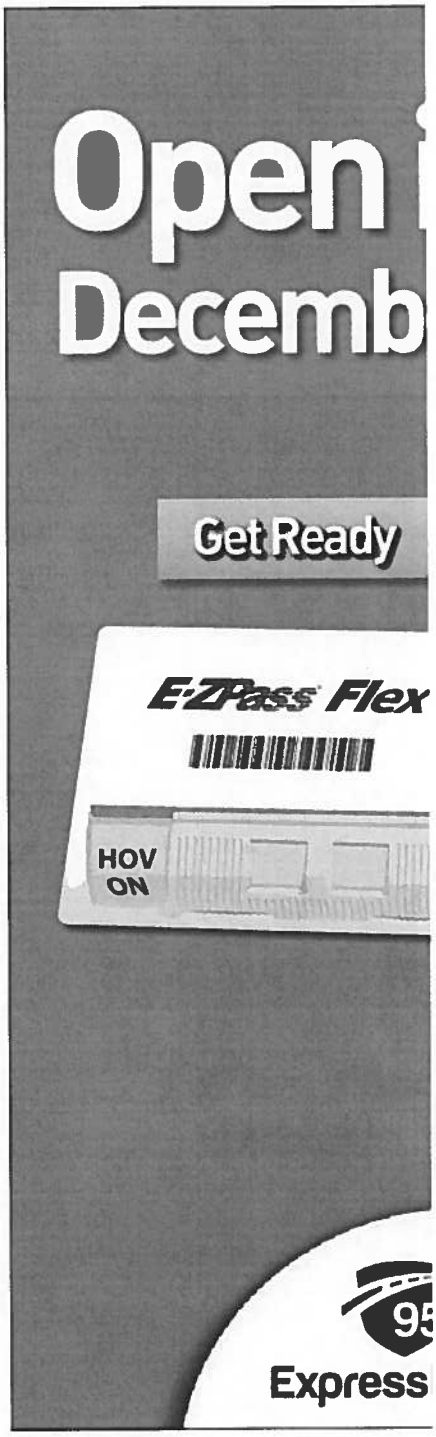

The Most Popular All Over

HONOLULU STAR-ADVERTISER
Storied past, uncertain future

also carrying crude oil, derailed and exploded in Casselton, N.D.

On Wednesday, ahead of the Lynchburg derailment, New York Governor Andrew M. Cuomo sent President Obama a letter appealing for stronger regulations and safety measures covering trains carrying growing amounts of crude.

"New York and all the states subject to this crude oil boom are extremely vulnerable to the impacts of derailment, spill, fire, or explosion, as demonstrated by" recent catastrophic incidents, Cuomo wrote.

Charles N. Haas, an environmental engineering professor at Drexel University in Philadelphia, said some of the crude oil from the train will sink to the river bottom, where it could harm organisms in the sediment within a couple miles.

Some of the the oil components in the water could vaporize, which could be hazardous to first responders and neighboring communities, Haas said. And downstream, water quality should be monitored.

"It could cause taste and odor problems for some of the utilities," Haas said, adding that checks should be performed for benzene and other chemicals and compounds that are toxic to humans at certain concentrations.

The Lynchburg tracks skirt the James River on the edge of downtown, near several businesses and an old shoe manufacturing company that has been converted into apartments. Officer Paul Cole of the Lynchburg Police

THE ATLANTIC
The Origins of Aggressive Atheism

TIME
IKEA Channels Apple in a Hilarious Ad for Its New...

Our Online Games
Play right from this page

Spider Solitaire
Genre(s): Card
Spider Solitaire is known as the king of all solitaire games!

52 card pickup
Genre(s): Card
Pick up cards as fast as you can!

Tri-Peaks Solitaire
Genre(s): Card
Reveal cards as you clear your way to the top!

Carniball
Genre(s): Arcade
This amusment park classic will bring back some joyous memories

Department said those shops and the apartment complex were evacuated as a precaution. The courthouse also was closed, though Cole said it is four blocks from the accident scene at 10th and Commerce streets.

Fire crews responded to the derailment, which occurred about 2 p.m., Svrcek said. The fire was out by nightfall.

The residential evacuation order was rescinded late Wednesday, although some businesses close to the crash site expected to remain closed on Thursday.

Lynchburg is a city of about 75,000 people, more than 100 miles west of Richmond. It's also where Liberty University is located.

Staff Writer Luz Lazo contributed to this report

Mike Laris came to Post by way of Los Angeles and Beijing. He's written about the world's greatest holstein bull, earth's biggest pork producer, home builders, the homeless, steel workers and Italian tumors.