ADAMS BROADWELL JOSEPH & CARDOZO
A PROFESSIONAL CORPORATION
ATTORNEYS AT LAW
601 GATEWAY BOULEVARD, SUITE 1000
SOUTH SAN FRANCISCO, CA 94080-7037
TEL: (650) 589-1660
FAX: (650) 589-5062
eklebaner@adamsbroadwell.com

DANIEL L. CARDOZO
THOMAS A. ENSLOW
TANYA A. GULESSERIAN
MARC D. JOSEPH
ELIZABETH KLEBANER
RACHAEL E. KOSS
JAMIE L. MAULDIN
ELLEN L. TRESCOTT

SACRAMENTO OFFICE
520 CAPITOL MALL, SUITE 350
SACRAMENTO, CA 95814-4721
TEL: (916) 444-6201
FAX: (916) 444-6209

January 27, 2014

By: Email and Overnight Mail

Murry Wilson
San Luis Obispo County
Department of Planning and Building
976 Osos St., Rm 200
San Luis Obispo, CA 93408-2040
Email: p66-railspur-comments@co.slo.ca.us

Re: Comments on the Draft Environmental Impact Report for the Phillips 66 Company Rail Spur Extension Project and Vertical Access Project Assessment

Dear Mr. Wilson:

We are writing on behalf of Safe Fuel and Energy Resources California ("SAFER California") to comment on the Phillips 66 Company Rail Spur Extension Project Public Draft Environmental Impact Report and Vertical Access Project Assessment ("DEIR"), prepared for San Luis Obispo County pursuant to the California Environmental Quality Act ("CEQA").[1] Phillips 66 proposes to modify an existing rail spur at its Santa Maria Refinery ("SMR") and to construct a new offloading facility to accommodate up to 547,500,000 gallons (13,035,714 billion barrels)[2,3] of annual crude oil shipments by rail to the SMR for processing at the SMR ("Project").[4] The offloading facility would be located at an existing coke storage area within the SMR. The Project includes unloading up to five trains per week, with an annual maximum number of trains expected to be approximately 250. The crude oil would be delivered to the SMR by unit and manifest trains. When delivered by manifest trains, a dedicated locomotive would remain on site to

[1] Pub. Resources Code, §§ 21000 et seq.
[2] Phillips 66 Company Rail Spur Extension Project Public Draft Environmental Impact Report and Vertical Access Project Assessment at p. 2-21 ("DEIR").
[3] 2,190,000 x 250 = 547,500,000 gallons.
[4] *Id.* at p. 2-21.

printed on recycled paper

move delivered railcars within the SMR. According to the DEIR, the refinery feedstock (i.e. crude oil) would be sourced from oilfields throughout North America, including North Dakota and Canada, depending on market economics.[5]

The Project is proposed within the Coastal Zone, approximately one half mile from Highway 1 and approximately sixteen miles northwest of Santa Maria in southern San Luis Obispo County. According to the DEIR, Project construction would occur within the SMR. The SMR and the Phillips 66 Rodeo Refinery are linked by a 200-mile pipeline, and are collectively referred to in the DEIR as the "San Francisco Refinery."[6] The Rodeo Refinery is located in Contra Costa County. In addition to being physically linked, the SMR and the Rodeo Refinery have integrated refining operations. The SMR processes heavy crude oil, and semi-refined liquid products are sent by pipeline from the SMR to the Rodeo Refinery for upgrading into finished petroleum products, such as butane and propane. The finished petroleum products are then shipped by rail to third party purchasers.[7]

Phillips 66 seeks a Conditional Use Permit from San Luis Obispo County authorizing the extension of the existing rail spur, construction of the unloading facility, new on-site transfer conveyance (pipelines), a restroom, an unpaved eastern Emergency Vehicle Access route between the eastern end of the rail spur and Highway 1, as well as work within the existing refinery connecting and upgrading existing infrastructure, including adding a new electricity cable to an existing pipeway and adding a new fire water pipeline to an existing pipe rack.[8] The Project also requires authorizations from the San Luis Obispo County Air Pollution Control District ("APCD"), a National Pollution Discharge Elimination System ("NPDES") permit from the State Water Resources Control Board, and a Coastal Development Permit from the County. The Project may also require Incidental Take Permits from the U.S. Fish and Wildlife Service ("USFWS") and the California Department of Fish and Wildlife ("CalFWS") for the federally endangered Nipomo lupine and a Report of Waste Discharge ("RWD") from the Central Coast Regional Water Control Board.

---

[5] DEIR, at p. 2-21.
[6] *See id*. at p. 2-3.
[7] *See ibid*.; Contra Costa Department of Conservation and Development, Propane Recovery Project Draft Environmental Impact Report , June 2013, at pp. ES-5, 1-1 *available at* *http://www.contracosta.ca.gov/documentcenter/view/26612* ("Propane Recovery Project DEIR").
[8] ARCADIS, Santa Maria Refinery Rail Project Land Use Application, Appendix A, June 2013, at p. 1 ("Project Land Use Application").

Based upon our review of the DEIR, County records, as well as pertinent public records in the possession of other agencies, we conclude that the DEIR is so inadequate under CEQA that it must be withdrawn. As a preliminary matter, the DEIR fails to include a complete and accurate description of the Project by excluding from the Project description the proposed change in SMR feedstock, the equipment and process changes that would be necessary to allow the SMR to refine Bakken field crudes, and to identify the Throughput Increase Project and the Rodeo Refinery Propane Recovery Project as part of the Project. As a result the DEIR fails to identify and mitigate the Project's potentially significant environmental impacts. In addition, the DEIR fails to provide a sufficiently detailed environmental setting for air quality, odors and hazards and fails to identify and reduce the Project's potentially significant impacts to air quality, public and worker health and safety, as well the Project's significant climate change impacts. The DEIR also fails to incorporate feasible mitigation into the Project to reduce the significant air quality impacts that are identified in the DEIR, and several of the water quality and air quality mitigation measures that are incorporated in the DEIR are otherwise inadequate and must be revised. These defects render the DEIR inadequate as an informational document. ABJC-1

The DEIR is also invalid because it fails to satisfy CEQA's basic requirements for format and content. In particular, the DEIR fails to include a Project hazards impacts analysis that can be understood by the public and decisionmakers. The hazards analysis included in the DEIR is convoluted, incomprehensible to the average reader, relies on outdated information and is otherwise unsupported. The numerous defects in the County's analysis, set forth in greater detail in the following paragraphs, are fatal errors. The County must withdraw the DEIR and prepare a revised DEIR which fully complies with CEQA. ABJC-2

We prepared these comments with the assistance of air quality expert Petra Pless, Ph.D. Dr. Pless's technical comments are attached hereto and submitted in addition to the comments in this letter. Accordingly, the County must address and respond to the comments of Dr. Pless separately.

I. INTEREST OF COMMENTORS

SAFER California advocates for safe processes at California refineries to protect the health, safety, the standard of life and the economic interests of its members. For this reason, SAFER California has a strong interest in enforcing environmental laws, such as CEQA, which require the disclosure of potential

environmental impacts of, and ensure safe operations and processes for, California oil refineries. Failure to adequately address the environmental impacts of crude oil transport and refining processes poses a substantial threat to the environment, worker health, surrounding communities, and the local economy.

Refineries are uniquely dangerous and capable of generating significant fires and the emission of hazardous and toxic substances that adversely impact air quality, water quality, biological resources and public health and safety. These risks were recognized by the Legislature and Governor when enacting SB 54 (Hancock). Absent adequate disclosure and mitigation of hazardous materials and processes, refinery workers and surrounding communities may be subject to chronic health problems and the risk of bodily injury and death. Additionally, rail transport of crude oil has been involved in major explosions, causing vast economic damage, significant emissions of air contaminants and carcinogens and, in some cases, severe injuries and fatalities.

Poorly planned refinery projects also adversely impact the economic wellbeing of people who perform construction and maintenance work in the refinery and the surrounding communities. Plant shutdowns in the event of accidental release and infrastructure breakdown have caused prolonged work stoppages. Such nuisance conditions and catastrophic events impact local communities and can jeopardize future jobs by making it more difficult and more expensive for businesses to locate and people to live in the area. The participants in SAFER California are also concerned about projects that carry serious environmental risks and public service infrastructure demands without providing countervailing employment and economic benefits to local workers and communities.

The members represented by the participants in SAFER California live, work, recreate and raise their families in San Luis Obispo County, including the towns of Arroyo Grande and Santa Maria. Accordingly, these people would be directly affected by the Project's adverse environmental impacts. The members of SAFER California's participating unions may also work on the Project itself. They will, therefore, be first in line to be exposed to any hazardous materials, air contaminants, and other health and safety hazards, that exist onsite.

SAFER California includes Mr. Ian Ostrov, who lives and works in the vicinity of the Project. SAFER California also includes Mr. Gene Sewell who lives and works in Arroyo Grande, California.

II. LACK OF TIMELY INFORMATION AND POTENTIAL NEED TO SUBMIT FURTHER COMMENTS

The County was required, but failed to make the DEIR and all documents relied on in the DEIR available for the duration of the public comment period.[9] Access to these materials was essential to our review and evaluation of the County's draft findings. Despite our efforts to obtain immediate access to all materials referenced in the DEIR on the first day of the public comment period, the County finally granted us access to these materials only twelve days before the end of the public comment period.

The County released the DEIR for public review on November 27, 2013, the day before the Thanksgiving Holiday. On the same day, our office emailed a records request to the County for immediate access to documents referenced in the DEIR.[10] On December 11, 2013, the County informed us in writing that documents referenced in the DEIR would be provided to our firm by December 13, 2013.[11] Our office did not receive the responsive materials until December 16th.[12]

ABJC-3

On December 24, 2013, our office sent a second request for documents referenced in the DEIR.[13] In a letter dated December 30, 2013, the County indicated that additional responsive materials may be forthcoming.[14] On January 3, 2014, our office received a letter from the County confirming that certain records may have been excluded from the County's December 16th production and that the

---

[9] *See* Pub. Resources Code, § 21092 subd. (b)(1); Cal. Code Regs., tit. 14, § 15087(c)(5).
[10] *See* Letter from Meghan A. Quinn to Murry Wilson regarding Request for Immediate Access to DEIR and Documents Referenced in the DEIR – Phillips 66 Rail Spur Extension Project and Vertical Coastal Access Project, SCH # 2013071028, Nov. 27, 2013, attached as **Attachment 1**.
[11] *See* Letter from Rita L. Neal to Meghan A. Quinn, regarding Public Records Act Request Dated November 27, 2013 Phillips Rail Spur Extension Project, Dec. 11, 2013, attached as **Attachment 1**.
[12] *See* Letter from Rita L. Neal to Meghan A. Quinn, regarding Public Records Act Request Dated November 27, 2013 Phillips 66 Rail Spur Extension Project, Dec. 13, 2013 (stamped received December 16, 2013), attached as **Attachment 1**.
[13] *See* Letter from Elizabeth Klebaner to Dan Buckshi and Annette Ramirez, regarding Phillips 66 Company Rail Spur Extension and Vertical Access Project (SCH # 2013071028), attached as **Attachment 1**.
[14] *See* Letter from Rita L. Neal to Meghan A. Quinn, regarding Public Records Act Request Dated November 27, 2013 Phillips 66 Rail Spur Extension Project and Vertical Coastal Access Project, Dec. 30, 2013, attached as **Attachment 1**.

remaining records would be sent on January 10, 2014.[15] The County completed its response to our November 27, 2013 request for all documents relied on in the DEIR on January 15, 2014.

On January 9, 2014, we requested an extension of the public comment period to allow an opportunity to review the materials provided by the County. Our request was denied. Accordingly, we provide these initial comments on the DEIR and, if necessary, we may submit supplemental comments on the DEIR at a future date. ABJC-3

III. THE PROJECT DESCRIPTION IS INADEQUATE

CEQA Guidelines section 15378 defines "project" to mean "the whole of an action, which has a potential for resulting in either a direct physical change in the environment, or a reasonably foreseeable indirect physical change in the environment."[16] "The term "project" refers to the activity which is being approved and which may be subject to several discretionary approvals by governmental agencies. The term project does not mean each separate governmental approval."[17] Courts have explained that "[a] complete project description of a project has to address not only the immediate environmental consequences of going forward with the project, but also all "*reasonably foreseeable* consequence[s] of the initial project."[18] "If a[n] . . . EIR. . . does not adequately apprise all interested parties of the true scope of the project for intelligent weighing of the environmental consequences of the project, informed decisionmaking cannot occur under CEQA and the final EIR is inadequate as a matter of law."[19] ABJC-4

The DEIR fails to meet CEQA's requirements for an adequate project description, by omitting from the analysis the reasonably foreseeable consequences of the Rail Spur Extension Project. In particular, the DEIR fails to identify and analyze reasonably foreseeable changes to existing SMR feedstock, and the related environmental impacts. The DEIR also fails to identify and analyze the separately

---

[15] *See* Letter from Rita L. Neal to Elizabeth Klebaner regarding Public Records Act Request Dated December 24, 2013 Phillips 66 Rail Spur Extension Project, Jan. 3, 2014, attached as **Attachment 1**.
[16] 14 Cal.Code Regs, tit. 14, §15378 ("CEQA Guidelines").
[17] CEQA Guidelines, 15378 subd. (c).
[18] *Laurel Heights Improvement Association v. Regents of University of California* (1988) 47 Cal.3d 376, emphasis added; *see also Vineyard Area Citizens for Responsible Growth, Inc. v. City of Rancho Cordova* (2007) 40 Cal.4th 412, 449-50.
[19] *Riverwatch v. Olivenhain Municipal Water Dist.* (2009) 170 Cal.App.4th 1186, 1201.

proposed but related Rodeo Refinery Propane Recovery Project and the SMR Throughput Increase Project as part of the Project in the DEIR. These defects in the County's analysis, set forth in greater detail in the following paragraphs, are fatal errors. The County must withdraw the DEIR and prepare a revised DEIR which complies with CEQA. ABJC-4

A. The DEIR Fails to Identify and Address the Change in Refinery Feedstock

In *Communities for a Better Environment v. City of Richmond*, the First District Court of Appeal held that an EIR for a refinery project must disclose whether the proposed equipment and facility changes would allow the refinery to process heavier crude where a change in feedstock is a reasonably foreseeable consequence of the proposed project.[20] There, petitioners argued that the EIR was inadequate because the project description failed to clearly and consistently state whether the project would facilitate the future processing of heavier crudes at the refinery, and to analyze the consequences of such a change.[21] In that case, the EIR acknowledged that the proposed project would allow the refinery to process a wider range of crude oils, including crude that contains a higher amount of sulfur and associated contaminants.[22] However, the lead agency denied claims that the refinery would also be able to process heavier crudes than before.[23] Petitioners pointed to conflicting statements in the EIR and the project proponent's SEC filings, as well as the project proponent's rejection of a permit limitation precluding the alteration of the baseline crude slate mix, all of which suggested that the project would, contrary to the lead agency's claim, enable the refinery to process heavier crudes.[24] The court agreed with petitioner that a crude switch was reasonably foreseeable and invalidated the EIR "because the EIR's project description … [was] inconsistent and obscure as to whether the Project enables the Refinery to process heavier crudes."[25] ABJC-5

Here, the DEIR suffers from the same error. The DEIR fails to disclose that the Project would facilitate a change to the current feedstock at the SMR. As in the case of *Communities for a Better Environment v. City of Richmond*, a change in

[20] *See Communities for a Better Environment v. City of Richmond* (2010) 184 Cal.App.4th 70, 89.
[21] *See id.* at p. 83.
[22] *Id.* at pp. 76-77.
[23] *See ibid.*
[24] *Id.* at pp. 83-85.
[25] *See id. at* p. 89.

feedstock is reasonably foreseeable from statements in the DEIR and publicly available information. Statements in the DEIR and Phillips 66's public representations all suggest that Phillips 66 is undertaking the Project in order to access competitively priced crudes, which substantial evidence shows are chemically distinct from the current feedstock.

According to the DEIR, the purpose of the Project is "to allow SMR to access a full range of competitively priced crude oil" by providing the capability to source feedstock from North American sources that are served by rail.[26] The DEIR further provides that feedstock deliveries "will be sourced from oilfields throughout North America based on market economics and other factors [and that] these [sources] could include fields as far away as the Bakken field in North Dakota or Canada."[27] "The most likely sources of crude oil for the SMR would be North Dakota, Canadian and Mid Continental area."[28] This crude is chemically distinct from the crude that is currently processed at the SMR. The current refinery feedstock is heavy, non-volatile sour crude, whereas Bakken crude is a light, sweet crude with a high American Petroleum Institute ("API") gravity and a low sulfur content. The North American sources of crude referenced in the DEIR include Canadian tar sands crudes. These crudes are also chemically distinct from the current feedstock, containing large quantities of volatile diluents and toxic chemicals and requiring more heat and energy to refine than the current feedstock. ABJC-5

Further evidence of a crude switch is the DEIR's admission that the Project is necessary to offset the decline in locally sourced crudes currently processed at the SMR. The DEIR states that "if and when local crude oil production (the current major source of oil for the SMR) declines, the Rail Spur Project, if approved would allow the SMR to maintain operating up to its permitted throughput levels."[29] The Santa Maria Refinery currently receives all crude oil by pipeline from various, primarily local sources, including the Outer Continental Shelf, Price/Canyon/Santa Maria Valley/San Joaquin Valley, San Ardo and Canada (2-7%).[30] Most of these crudes are in decline, particularly offshore sources which are a major feedstock source for the SMR.[31] As explained above, these local crudes are chemically distinct

[26] DEIR at p. 2-1; *see also* Project Land Use Application, Appendix A, June 2013, at p. 1.
[27] DEIR at p. 2-21.
[28] DEIR at p. 4.12-21.
[29] *Ibid.*
[30] *See* DEIR at p. 2-27.
[31] *See* DEIR at pp. 6-3, 2-30.

from the North American crudes that could be imported by rail to the SMR if and when the Project is approved.

Public statements by Phillips 66 also strongly suggest that the purpose of the Project is to allow Phillips 66 to change the feedstock at the SMR to "advantaged" North American crudes. Advantaged crudes are competitively priced because they are stranded, with no pipeline access, and must be delivered by rail. Advantaged crudes include tar sands and Bakken crudes. According to Phillips 66's website, the challenge for refiners like Phillips 66 is getting the advantaged crude oil to the refineries that are equipped to process it.[32] Phillips 66's Chief Executive Officer Greg Garland states that the company is "looking at pipe, rail, truck, barge and ship – just about any way . . . [it] can get advantaged crude to the front end of the refineries."[33] According to Phillips 66, until new pipelines projects come online, the easiest and most cost efficient way to get advantaged crude to some of Phillips 66's refineries is by rail.[34] Jay Clemens, manager of Business Development for Phillips 66 and the leader of the advantaged crude strategy team states that the company's refineries are not currently setup to take delivery of large volumes of crude oil from trains, "so we're looking at building rail offloading facilities at several refineries . . . ."[35] According to Phillips 66, the next challenge is identifying strategies to get more advantaged crude oil to its California refineries.[36] Mr. Clemens states "California refineries are capable of running a wide range of crude oils which creates opportunities throughout North America to supply California if we can find a cost effective mode of transportation."[37]

ABJC-5

Finally, a change in crude is reasonably foreseeable here because it is clearly in Phillips 66's financial interest. According to Phillips 66, "[t]he single biggest lever . . . [Phillips 66 has] to improve value in … [its] refining business is through lowering . . . feedstock costs. A savings of $1 per barrel . . . is worth about $450 million of net income . . ."[38] Advantaged crude oil sells at a discount relative to crude oils tied to the global benchmark, North Sea crude. Canadian tar sands

---

[32] Phillips 66, *Phillips 66 Delivers Advantaged Crude Strategy*, *available at* http://www.phillips66.com/EN/newsroom/feature-stories/Pages/AdvantagedCrude.aspx (last accessed Jan 21, 2014), attached as **Attachment 2**.
[33] *Id.*
[34] *Ibid.*
[35] *Ibid.*
[36] *Ibid.*
[37] *Ibid.*
[38] *Ibid.*

crudes have been identified as the most competitively priced crudes to import into California by rail.[39]

The reasonably foreseeable crude switch from local heavy crudes to Bakken and/or North American shale and Canadian tar sands crudes is significant in that it will change the scope and nature of the Project's environmental impacts. The composition of crude slate determines a project's impacts on air quality, odors, public health and hazards and are relevant to, processing, as well as transporting and unloading the crude. The chemical composition of crude also determines its corrosive qualities, increasing the chance of accidental release and catastrophic events. Cost advantaged crudes in particular have been linked with such events, as demonstrated by the August 2012 catastrophic fire at the Chevron Richmond Refinery. The County is required to revise the DEIR to disclose that the Project would facilitate a change in feedstock at the SMR. The County is also required to disclose the chemical composition of the crude that could be processed at the SMR, as compared to current conditions, and analyze the environmental consequences of the change. ABJC-5

B. The Project Description Fails to Include the Equipment Changes Necessary to Process Bakken Crudes

The DEIR states that the Project would enable the SMR to receive rail deliveries of Bakken field crudes.[40] The SMR is designed to refine heavy, high sulfur crudes. As described above, Bakken crude is a light sweet crude with a high API gravity and a low sulfur content. The SMR is not designed to process light sweet crude. While small amounts of Bakken could be blended with locally sourced or heavy high sulfur crudes or imported tar sand crudes without significant refinery design changes, it is unlikely that Bakken crudes could comprise a large fraction of the SMR crude slate without major capital projects. ABJC-6

Since the Project proposes to import up to 100 percent of the Refinery's permitted crude capacity by rail and identifies Bakken crude as a potential feedstock, the DEIR must disclose the upgrades necessary to refine the crude. These changes are a reasonably foreseeable consequence of the Project and will change the scope and severity of the Project's environmental impacts. The County

[39] *See* Valero, UBS Global Oil and Gas Conference, May 21-22, 2013, at p.10, *available at* http://www.valero.com/InvestorRelations/Pages/EventsPresentations.aspx.
[40] *See* DEIR at p. 2-21.

should require Phillips 66 to provide a complete Project description and include the description in a revised DEIR. ABJC-6

C. The DEIR Violates CEQA's Prohibition on Piecemeal Environmental Review

A public agency may not segment a large project into two or more smaller projects in order to mask serious environmental consequences. CEQA prohibits such a "piecemeal" approach and requires review of a project's impacts as a whole.[41] CEQA mandates "that environmental considerations do not become submerged by chopping a large project into many little ones – each with a minimal potential impact on the environment – which cumulatively may have disastrous consequences."[42] Before approving a project, a lead agency must assess the environmental impacts of all reasonably foreseeable phases of a project.[43] "The significance of an accurate project description is manifest where," as here, "cumulative environmental impacts may be disguised or minimized by filing numerous, serial applications."[44]

ABJC-7

The California Supreme Court held that an EIR must treat activities as part of the project where the activities at issue are "a reasonably foreseeable consequence of the initial project and the future expansion or action will be significant in that it will likely change the scope or nature of the initial project or its environmental effects."[45] Both elements are met here. The Project is a reasonably foreseeable consequence of the Throughput Increase and Propane Recovery projects, and will change the scope of each project's environmental effects. These separately proposed changes within the San Francisco Refinery must be analyzed as one Project in the revised DEIR.

The SMR Throughput Increase Project was proposed by Phillips 66 to increase the maximum limit of crude oil throughput at the SMR by 10 percent.[46]

---

[41] CEQA Guidelines, § 15378, subd. (a); *Burbank- Glendale-Pasadena Airport Authority v. Hensler* (1991) 233 Cal.App.3d 577, 592.
[42] *Bozung v. Local Agency Formation Commission* (1975) 13 Cal.3d 263, 283-84; *City of Santee v. County of San Diego* (1989) 214 Cal.App.3d 1438, 1452.
[43] *Laurel Heights Improvement Assn. v. Regents of University of California* (1988) 47 Cal.3d 376, 396-397 (EIR held inadequate for failure to assess impacts of second phase of pharmacy school's occupancy of a new medical research facility).
[44] *Arviv Enterprises v. South Valley Area Planning Commission* (2002) 101 Cal.App.4th 1333, 1346.
[45] *Laurel Heights Improvement Association v. Regents of the University of California* (1988) 47 Cal.3d 376, 396.
[46] Phillips Santa Maria Refinery, Throughput Increase Project FEIR, Nov. 2012, at p. ES-1.

According to the Throughput Increase Project FEIR, the project would potentially increase the volumes of crude oil delivered to the SMR and increase the volume of products leaving the SMR by pipeline to the Rodeo Refinery, among other changes.[47] The County and the APCD jointly approved the Throughput Increase Project in 2013.

Phillips 66 proposed the Propane Recovery Project at the Rodeo Refinery in June 2012.[48] The purpose of that project is to modify existing facilities at the Rodeo Refinery to enable the Rodeo Refinery to recover propane from refinery fuel gas and other process streams and ship it by rail and truck for sale.[49] Contra Costa County released an FEIR for the project in November 2013. The County's approval of the Propane Recovery Project has been appealed to the Contra Costa County Board of Supervisors and the appeal is expected to be heard in April 2014.

ABJC-7

As described by Dr. Petra Pless in her comments, information contained in the Project DEIR makes clear that the throughput increase at the SMR could not be realized but for the crude oil that would be brought in by rail.[50] In particular, the DEIR indicates that the SMR would be unable to continue operating at current throughput levels if the Rail Spur Project were not implemented.[51] According to the DEIR, the bulk of the crude oil currently processed at the SMR (60 to 85 percent) is currently delivered via pipeline from offshore platforms in the Outer Continental Shelf of Santa Barbara.[52] This pipeline system is currently the only way that the SMR can receive crude oil.[53] While crude oil can also be trucked to the Santa Maria Pump Station and then placed into the pipeline, truck deliveries to the Santa Maria Pump Station are limited to a permitted maximum of 26,000 barrels per day,[54] far below the SMR's throughput limit of 48,950 barrels per day sought by the SMR Throughput Increase Project.[55] Thus, absent further permit revisions, any additional crude would have to be brought in to the SMR by rail.

---

[47] *Id.* at p. ES-4.
[48] Phillips 66 Rodeo Refinery Rodeo, California Rodeo Propane Recovery Project Land Use Permit Application, June 2012, attached **Attachment 3**.
[49] *Id.* at p. 1.
[50] Pless Comments at pp. 2-5, attached as **Attachment 4**.
[51] *Id.*
[52] *See id.*, *citing* DEIR, at pp. 2-27 and 2-30.
[53] *Ibid.*
[54] *Ibid.*
[55] *See id.*, *citing* SMR Throughput Increase FEIR, at p. 2-24.

As further documented by Dr. Pless, crude oil production in California has been in substantial decline for decades.[56] For example, the DEIR discloses that crude oil production in Santa Barbara County, both onshore and off-shore, has declined to 30,000 barrels per day.[57] Given the limitations on truck import to the Santa Maria Pump Station and the long-standing knowledge of a declining crude oil supply,[58] particularly from the off-shore sources in the Outer Continental Shelf, Dr. Pless concludes that it is highly unlikely that Phillips 66 would have sought an increase in throughput at the SMR without simultaneously contemplating additional ways to deliver crude oil to the facility.[59] In other words, a throughput increase cannot be implemented at the SMR unless Phillips 66 can import crude to offset declining local crude supplies. Dr. Pless's analysis makes clear that the Project is a reasonably foreseeable consequence of the Throughput Increase Project.

As further described by Dr. Pless in her comments, the Propane Recovery Project cannot be implemented but for the Rail Spur Extension Project. The Throughput Increase Project, the Propane Recovery Project and the Project are all inextricably linked.[60]

ABJC-7

The Project will also will likely change the scope or nature of the environmental effects of the Throughput Increase Project and the Propane Recovery Project.[61] As described above and in the comments of Dr. Pless, cost-advantaged North American crude is chemically distinct from the crude that is currently processed at the SMR. A change in the chemical composition of the SMR crude would also alter the chemical composition and the environmental impacts of the semi-refined products that would be sent from the SMR to the Rodeo Refinery to be converted into sellable petroleum products.

The fact that the Throughput Increase Project has already been approved does not negate the requirement for preparing a revised DEIR which analyzes the

---

[56] Pless Comments at pp. 3-4.
[57] DEIR, p. 2-30.
[58] *See*, *e. g.*, California Energy Commission, California Crude Oil Production and Imports, CEC-600-2006-006, April 2006, Figure 2, p. 4; http://www.energy.ca.gov/2006publications/CEC-600-2006-006/CEC-600-2006-006.PDF; and California Energy Commission, Transportation Energy Forecasts and Analyses for the 2009 Integrated Energy Policy Report, CEC-600-2010-002-SF, May 2010, p. 6; http://www.energy.ca.gov/2010publications/CEC-600-2010-002/CEC-600-2010-002-SF.PDF.
[59] *See* Pless Comments at pp. 4-5.
[60] *Id.*
[61] *See id.*

whole of the Project. The requirement to evaluate the whole of a project applies even where one of the phases has already undergone prior environmental review. It was precisely such piecemealing that was rejected by the Second District in the *Natural Resources Defense Council v. City of Los Angeles* case.[62] In that case, the Port of Los Angeles analyzed Phase 2 of a three-phase project in a negative declaration. The Court held that an EIR was required to analyze the entire three-phase project as a whole, even though earlier CEQA review had been completed on Phase I of the project.[63] Similarly here, the County must prepare a revised DEIR to analyze the impacts of the Project, together with the Throughput Increase Project and the Propane Recovery Project, rather than analyzing each individual proposal as unrelated and distinct projects. ABJC-7

IV. THE DESCRIPTION OF THE ENVIRONMENTAL SETTING IN THE DEIR IS INADEQUATE

CEQA requires the lead agency to include a description of the physical environmental conditions in the vicinity of a project as they exist at the time environmental review commences.[64] The description of the environmental setting constitutes the baseline physical conditions by which a lead agency may assess the significance of a project's impacts. The EIR must also describe the existing environmental setting in sufficient detail to enable a proper analysis of project impacts.[65]

Describing the environmental setting accurately and completely for each environmental condition in the vicinity of the project is critical to an accurate, meaningful evaluation of environmental impacts. The courts are clear that, "[b]efore the impacts of a Project can be assessed and mitigation measures considered, an [environmental review document] must describe the existing environment."[66] It is: ABJC-8

> a central concept of CEQA, widely accepted by the courts, that the significance of a Project's impacts cannot be measured unless the DEIR

[62] *Natural Resources Defense Council v. City of Los Angeles* (2002) 103 Cal.App.4th 268, 284.
[63] *Id.*
[64] CEQA Guidelines, § 15125 subd. (a); *see* also *Communities for A Better Environment v. South Coast Air Quality Management Dist.* (2010) 48 Cal.4th 310, 321.
[65] *Galante Vineyards v. Monterey Peninsula Water Management District* (1997) 60 Cal.App.4th 1109, 1121-22.
[66] *County of Amador v. El Dorado County Water Agency* (1999) 76 Cal.App.4th 931, 952.

first establishes the actual physical conditions on the property. In other words, baseline determination is the first rather than the last step in the environmental review process.[67]

Additionally, it is axiomatic that the baseline information on which an EIR relies must constitute substantial evidence.[68] The CEQA Guidelines define "substantial evidence" as "enough relevant information and reasonable inferences from this information that a fair argument can be made to support a conclusion."[69] "Substantial evidence shall include facts, reasonable assumptions predicated upon facts, and expert opinion supported by facts." "[U]nsubstantiated opinion or narrative [and] evidence which is clearly inaccurate or erroneous . . . is not substantial evidence."[70] ABJC-8

The DEIR fails to establish the environmental setting for air quality, hazards, odors, toxic air contaminants and public health because the information presented in the DEIR is not sufficiently detailed. The County must revise the DEIR to include an adequate description of the environmental setting. Absent this information, the County cannot conclude that the Project's potentially significant impacts have been reduced to a less than significant level.

A. The DEIR Fails to Establish the Environmental Setting for Air Quality Resources

An EIR must describe the existing environmental setting in sufficient detail to enable a proper analysis of project impacts.[71] The stated objective of the Project is for Phillips 66 to gain access to "a full range of competitively priced crude oil by providing [the SMR with] the capability to source raw material from North American sources that are served by rail."[72] The chemical composition of crude oil varies significantly depending on its geographic location which, in turn, changes the air quality impacts of refining the crude. Thus, the DEIR must identify the ABJC-9

---

[67] *Save Our Peninsula Comm. v. Monterey County Bd. of Supervisors* (2001) 87 Cal.App.4th 99, 125.
[68] *See* CEQA Guidelines, §15063 subd. (a)(3) ("An initial study may rely upon expert opinion supported by facts, technical studies or other substantial evidence to document its findings.").
[69] CEQA Guidelines, §15384.
[70] Pub. Resources Code, § 21082.2 subd. (c).
[71] *Galante Vineyards v. Monterey Peninsula Water Management District* (1997) 60 Cal.App.4th 1109, 1121-22.
[72] DEIR, at p. 2-1.

chemical composition of the current feedstock in order to determine the environmental impacts of the reasonably foreseeable crude switch.

The Air Quality section of the DEIR fails to identify the chemical composition of the current SMR feedstock. As Phillips 66 proposes to change the current SMR feedstock by supplying the refinery with advantaged North American crudes, the Project's environmental impacts cannot be accurately assessed unless the DEIR fully discloses the baseline feedstock and assesses the environmental consequences of transitioning the SMR to refining advantaged North American crudes. In particular, when assessing the future feedstock's potential emissions it is necessary to consider the properties (*e.g.,* emission rates, toxic compounds) of the existing feedstock. The DEIR fails in this regard.

While the DEIR enumerates the existing pollutant-emitting stationary and mobile sources at the SMR, the information provided in the DEIR is insufficient to enable a proper analysis of the Project's impacts.[73] Volatile chemicals and toxic air contaminants in crude are emitted from tanks, pumps, connectors and valves involved in transporting, storing and refining the crude. The nature and amount of emissions and releases is largely dependent on the chemical composition of the feedstock. Certain crudes also require additional energy to refine, resulting in increased combustion emissions. For these reasons, the DEIR must be revised to disclose the chemical composition of the baseline crude. The Project's impacts cannot be accurately assessed absent this data. In addition, absent disclosure of the baseline feedstock, it is impossible for the public and the decisionmakers to assess the accuracy of the assumptions relied upon in the DEIR, including whether emissions rates and air contaminants relied on in the DEIR are representative of actual conditions. ABJC-9

B. The DEIR Fails to Establish the Environmental Setting for Odors

An EIR must describe the existing environmental setting in sufficient detail to enable a proper analysis of project impacts.[74] The stated objective of the Project is for Phillips 66 to gain access to "a full range of competitively priced crude oil by providing [the SMR with] the capability to source raw material from North ABJC-10

[73] *See* DEIR at pp. 4.3-17-22.
[74] *Galante Vineyards v. Monterey Peninsula Water Management District* (1997) 60 Cal.App.4th 1109, 1121-22.

American sources that are served by rail."[75] The chemical composition of crude oil varies significantly depending on its geographic location which, in turn, changes the odor impacts of refining the crude.

While the DEIR enumerates the existing odiferous processes at the SMR, the information provided in the DEIR is insufficient to enable a proper analysis of the Project's impacts.[76] The Air Quality section of the DEIR fails to identify the chemical composition of the current SMR feedstock. As Phillips 66 proposes to change the current SMR feedstock by supplying the refinery with advantaged North American crudes, the Project's environmental impacts cannot be accurately assessed unless the DEIR fully discloses the baseline feedstock and assesses the environmental consequences of transitioning the SMR to refining advantaged North American crudes. The DEIR fails in this regard. ABJC-10

While the DEIR enumerates the existing odor-emitting stationary and mobile sources at the SMR, the information provided in the DEIR is insufficient to enable a proper analysis of the Project's impacts.[77] Odiforous chemicals are emitted from tanks, pumps, connectors and valves involved in transporting, storing and refining the crude. The nature and amount of emissions and releases is largely dependent on the chemical composition of the feedstock. For these reasons, the DEIR must be revised to disclose the chemical composition of the baseline crude. The Project's impacts cannot be accurately assessed absent this data. In addition, absent disclosure of the baseline feedstock, it is impossible for the public and the decisionmakers to assess the accuracy of the assumptions relied upon in the DEIR, including whether emissions rates and air contaminants relied on in the DEIR are representative of actual conditions.

C. The DEIR Fails to Establish the Environmental Setting for Hazards

An EIR must describe the existing environmental setting in sufficient detail to enable a proper analysis of project impacts.[78] The stated objective of the Project is for Phillips 66 to gain access to "a full range of competitively priced crude oil by providing [the SMR with] the capability to source raw material from North ABJC-11

[75] DEIR, at p. 2-1.
[76] *See* DEIR at p. 4.3-22.
[77] *See* DEIR at pp. 4.3-17-22.
[78] *Galante Vineyards v. Monterey Peninsula Water Management District* (1997) 60 Cal.App.4th 1109, 1121-22.

American sources that are served by rail."[79] While not express in the DEIR impact analysis for hazards, the DEIR suggests that the SMR currently receives feedstock exclusively by pipeline (and, indirectly, by truck).[80] Elsewhere, the DEIR provides:

> [T]he bulk of the crude oil processed at the SMR is delivered via pipeline from offshore platforms in the Outer Continental Shelf of Santa Barbara County and from oil fields in the Santa Maria area. This pipeline system is currently the only way that the Phillips 66 refinery can receive crude oil. Crude oil can be trucked to the Santa Maria Pump Station and then placed into the pipeline for delivery to the refinery. Truck delivery to the Santa Maria Pump Station is limited to a permitted maximum of 819,000 gallons (26,000 bbls) per day by the Santa Barbara County APCD. Having only one pipeline system available for delivering crude oil to the refinery limits the refinery's ability to obtain crude oil from sources outside of the local area.[81]

ABJC-11

The environmental setting for hazards must be revised to clearly state that currently, feedstock is delivered to the SMR exclusively by pipeline, and assess the hazards of transitioning feedstock deliveries to rail.

V. THE DEIR FAILS TO IDENTIFY AND REDUCE POTENTIALLY SIGNIFICANT AIR QUALITY IMPACTS

In the following sections, we address the DEIR's analysis of the Project's environmental impacts as discussed in the DEIR. Accordingly, the following comments analyze the potentially significant impacts that would result from the Rail Spur Extension Project alone. The potentially significant impacts discussed here would be more severe if all Project components – the Rail Spur Extension Project, the Throughput Increase Project, the Propane Recovery Project, the

ABJC-12

[79] DEIR, at p. 2-1.
[80] *See*, *e.g.*, DEIR at pp. 4.3-18, 4.7-33 ("Currently, the rail operations associated with the Phillips 66 Refinery consist of the ***export*** of petroleum coke from the SMR for commercial use throughout the U.S. and abroad")(emphasis added), 4.7-37 ("Materials transported by pipeline could cause impacts if those materials are spilled. Crude oil transported from the Santa Maria Pump Stations…."), 4.7-39, 4.3-65 ("The majority of crude oil currently being delivered to the SMR is from offshore, Outer Continental Shelf (OCS) sources, which are delivered to the SMR by pipeline and electrically power pumps…").
[81] DEIR at p. 2-30.

equipment changes necessary to allow the SMR to process Bakken crudes, etc. – were analyzed together. ABJC-12

A. The DEIR Substantially Underestimates Operational ROG Emissions

The DEIR concludes that emissions of ROGs and NOx would exceed daily and annual emissions thresholds and are significant.[82] However, as demonstrated by Dr. Pless, the Project's ROG emissions are dramatically higher than disclosed in the DEIR. It is a foundational principle of CEQA that the analyses and the conclusions in an EIR must be supported by substantial evidence. Substantial evidence is defined to include "facts, reasonable assumptions predicated upon facts, and expert opinion supported by facts."[83] "[E]vidence which is clearly erroneous or inaccurate . . . does not constitute substantial evidence."[84] Dr. Pless documented in her comments that the calculations underlying the ROG emissions estimates in the DEIR are plainly erroneous and, therefore, unreliable.

In particular, the DEIR preparers failed to rely on emissions factors specifically adopted for refineries to calculate fugitive Project ROG emissions.[85] The DEIR and the underlying analyses also fail to substantiate this significant discrepancy in the analysis. Using the appropriate emissions factors, Project operational ROG emissions amount to 150 pounds per day ("lbs/day"), or about **24 times greater than the emission rate disclosed in the DEIR**.[86] Similarly, annual ROG emissions would amount to approximately 27 tons per year, or approximately **27 times the emission rate disclosed in the DEIR**.[87] The DEIR must be revised to disclose the actual severity of the Project's air quality impacts. ABJC-13

B. The DEIR Fails to Require Feasible Mitigation Measures to Reduce ROG and Diesel Particulate Emissions

An EIR is inadequate unless it includes "a detailed statement setting forth... mitigation measures proposed to minimize [the project's] significant effects on the ABJC-14

[82] *See* DEIR at p. 4.3-43.
[83] CEQA Guidelines, § 15384.
[84] CEQA Guidelines, § 15384 subd. (a).
[85] *See* Pless Comments at pp. 8-11.
[86] *See id.*
[87] *Ibid.*

environment."[88] CEQA requires lead agencies to incorporate all feasible mitigation measures into a project to reduce the project's potentially significant impacts to a level of insignificance.[89] The DEIR finds that Project operational emissions of ROGs and diesel particulate emissions are potentially significant and proposes a series of off-site mitigation measures to reduce impacts to a less than significant level.[90] However, as demonstrated by Dr. Pless in her comments, on-site mitigation measures are feasible and more effective at reducing emissions, and should be included in the DEIR. Moreover, on-site measures should be included in the DEIR for the County's consideration in the event that Phillips 66 objects to the proposed off-site mitigation, or if the off-site mitigation is determined to be infeasible.

As summarized by Dr. Pless, on-site mitigation should include installation of additional, more efficient control technologies on existing units at the SMR and the Santa Maria Pump Station such as, for example, vapor recovery units, replacement of leaking components, installation of leakless components, installation of low NOx burners or replacement of older, high-emitting equipment.[91] In addition, the County should require use of best available control technology ("BACT") for the Project carbon canisters. The DEIR proposes a removal efficiency of at least 95 percent. However, much higher removal efficiencies can be achieved with carbon canisters (99 percent or greater) or thermal incinerators (99.8 percent).[92] ABJC-14

Substantial evidence supports the finding that the above measures are feasible and effective at reducing emissions. Moreover, on-site measures should be considered because ROG emissions would more severe than disclosed and in the event that mitigation included in the DEIR is rejected by Phillips 66 or determined to be infeasible. The County should prepare a revised DEIR which includes a consideration of on-site mitigation measures to reduce Project operational emissions, and circulate its analysis for public and agency review and comment.

---

[88] *See* Pub. Resources Code, § 21100 subd. (b)(3); *see also* CEQA Guidelines, §§ 15126 subd. (e).
[89] *See* Pub. Resources Code, § 21081 subd. (a)(1)-(3); CEQA Guidelines, §§ 15002 subd. (a)(3), 15021 subd. (a)(2), 15091 subd. (a)(1).
[90] *See* DEIR at pp. 4.3-43-46.
[91] *See* Pless Comments, at pp. 12-13.
[92] *See id.*

C. The DEIR Fails to Identify a Potentially Significant Child Cancer Risk at Nearby Residences

The DEIR recognizes that operational activities associated with the Project would result in emissions of toxic air contaminants from fugitive emissions sources (*e.g.*, valves, pumps, and vapor recovery canisters) and diesel exhaust from locomotive engines.[93] The DEIR's health risk assessment estimates excess cancer risks at the SMR parcel boundary immediately south of the rail spur location of up to 78.1 in one million at the Point of Maximum Impact ("PMI") and the highest excess cancer risk at a residential or sensitive receptor parcel boundary of 9.7 in one million.[94] The DEIR then concludes that because excess cancer risk at the residential receptor would be below the APCD's significance threshold of 10 in one million, the health risk impacts would be less than significant.[95] The DEIR's conclusion is invalid because it is unsupported.

As demonstrated by Dr. Pless in her comments, the DEIR fails to address the incremental cancer risk for receptors during the first 16 years of life. To address the higher risk of early-in-life exposure, California's Office of Environmental Health Hazard Assessment ("OEHHA") recommends the use of age-dependent adjustment factors, or age sensitivity factors, to account for the higher risks during early stages of life. Specifically, OEHHA recommends: ABJC-15

> In order to address the issue of early-in life exposures, OEHHA has adopted a policy, based on the available scientific data, of weighting cancer risk from exposures from the third trimester to <2 yrs of age by a factor of ten, and exposures from age two to less than sixteen years by a factor of three. In addition to innate sensitivities to some carcinogens, children have greater exposures due to physiological and behavioral factors. As a result, a greater proportion of total lifetime risk is accrued by age 16 with lifetime exposure to a constant air concentration than was previously recognized.[96]

---

[93] DEIR, at p. 4.3-47.
[94] DEIR, at p. 4.3-48.
[95] DEIR, at p. 4.3-48.
[96] OEHHA, Air Toxics Hot Spots Program Risk Assessment Guidelines, Technical Support Document for Exposure Assessment and Stochastic Analysis, Final, August 2012 (hereafter OEHHA Technical Support Document"), pp. 11-2 (internal citations omitted); http://oehha.ca.gov/air/hot_spots/pdf/2012tsd/TSDportfolio2012.pdf.

EPA recommends the same age-dependent adjustment factors.[97] Because children are potentially present at residential locations, age-dependent excess cancer risk must be evaluated. The results of including age sensitivity factors in a health risk assessment are commonly referred to as "child cancer risk."

Dr. Pless has shown that when adjusting the DEIR's calculations for child cancer risk, the Project's cancer risk is potentially significant and unmitigated. In particular, Dr. Pless found that excess child cancer risk resulting from emissions associated with the Project's locomotive diesel exhaust alone, 13.9 in one million, would exceed the APCD's significance threshold of 10 in one million.[98] Dr. Pless further concludes that because the DEIR substantially underestimates emissions from fugitive equipment leaks, the Project would likely exceed the APCD's thresholds for adult receptors if the DEIR preparer's error were to be corrected.[99]

ABJC-15

As explained by Dr. Pless, crude oil vapors contain various amounts of toxic air contaminants including the carcinogenic contaminants benzene, toluene, ethylbenzene, and xylene, in sum known as "BTEX."[100] Among the crude types potentially imported to the SMR is Canadian tar sands bitumen diluted to pipeline specifications with diluents ("DilBits"). The diluent is typically natural gas condensate, pentanes, or naphtha. DilBits, in particular, contain high amounts of BTEX. These very high concentrations in the crude oils result in very high concentrations in crude vapor that would be emitted from equipment leaks and the carbon canisters and could result in significant public health impacts.[101]

The DEIR's conclusion that the Project will not result in a potentially significant cancer risk is unsupported. Substantial evidence in the record shows that the Project will result in potentially significant, unaddressed cancer risks. The County should prepare a revised DEIR which discloses this potentially significant impact and proposes measures that could avoid the impact, or reduce the impact to a level of insignificance.

---

[97] EPA, Cancer Risk Calculations; http://www.epa.gov/oswer/riskassessment/sghandbook/riskcalcs.htm.
[98] *See* Pless Comments at pp. 14-19.
[99] *See id.*
[100] *See id.*
[101] *See ibid.*

VI. THE DEIR FAILS TO IDENTIFY THE PROJECT'S POTENTIALLY SIGNIFICANT CLIMATE CHANGE IMPACTS

The DEIR presents estimates for greenhouse gas ("GHG") emissions from construction, on- and off-site locomotives, electricity, and other offsite sources resulting from Project construction and operation.[102] Specifically, the DEIR estimates emissions of 5,533 metric tonnes of carbon dioxide-equivalent ("MT CO_2e") within San Luis Obispo County; 14,179 MT CO_2e within California; and 65,908 MT CO_2e within the United States.[103] The DEIR then finds that total GHG emissions within the County would not exceed the APCD thresholds of significance and would, therefore, not result in a significant impact.[104] The conclusion in the DEIR is invalid because it is unsupported.

The APCD recognizes that for the purpose of CEQA, all project GHG emissions, including those occurring outside of the County (*e.g.*, locomotives traveling to Long Beach in Los Angeles County and heavy-duty trucks traveling to and from Kern, Santa Barbara, Monterey, Ventura, and Los Angeles Counties) must be included in the Project's emissions analysis and compared to the GHG significance threshold.[105] This approach is also consistent with County practice, as reflected in the Throughput Project EIR.[106]

ABJC-16

According to the DEIR, more than 90 percent of the GHG emissions associated with the Project would occur outside of San Luis Obispo County.[107] However, the DEIR fails to address these emissions. This deficiency in the DEIR contradicts prior County practice, as well as the recommendations of the APCD.

As shown by Dr. Pless in her comments, the Project will result in potentially significant and unaddressed climate change impacts. In particular, Dr. Pless calculates total Project GHG emissions to equal 65,908 MT CO_2e.[108] Accordingly, Project emissions exceed the APCD's stationary source threshold of 10,000 MT CO_2e and are significant.[109]

---

[102] DEIR, at Table 4.3-15, p. 4.3-50.
[103] DEIR, at p. 4.3-50.
[104] DEIR, at p. 4.3-50.
[105] *See*, *e.g.*, Throughput Project, Tables 4.1-9, 4.1-15, and 4.1-18 and p. 4.1-45.
[106] *See ibid.*
[107] (1) - (5,533 MT CO_2e)/(65,908 MT CO_2e) = 0.916.
[108] *See* Pless Comments at p. 22.
[109] *See ibid.*

The DEIR's conclusion that the Project will not result in potentially significant climate change impacts is unsupported. Substantial evidence in the record shows that the Project will result in potentially significant, unaddressed emissions of GHGs. The County should prepare a revised DEIR which discloses this potentially significant impact and proposes measures that could avoid the impact, or reduce the impact to a level of insignificance. ABJC-16

VII. THE DEIR FAILS TO IDENTIFY AND REDUCE POTENTIALLY SIGNIFICANT PUBLIC HEALTH IMPACTS

The DEIR fails to identify and address potentially significant health impacts due to Valley Fever. Valley Fever, or coccidioidomycosis (short cocci), is an infectious disease caused by inhaling the spores of *Coccidioides ssp.*,[110] a soil-dwelling fungus. Spores, or arthroconidia, are released into the air when infected soils are disturbed, *e.g.*, by construction activities, agricultural operations, dust storms, or during earthquakes. The disease is endemic (native and common) in the semiarid regions of the southwestern United States. San Luis Obispo County, including the Project site, is located within the established endemic range of Valley Fever and the disease has become an increasing concern for health officials in San Luis Obispo County.[111] ABJC-17

Typical symptoms of Valley Fever include fatigue, fever, cough, headache, shortness of breath, rash, muscle aches, and joint pain. Symptoms of advanced Valley Fever include chronic pneumonia, meningitis, skin lesions, and bone or joint infections. Cases of Valley Fever in San Luis Obispo County have more than doubled over the past few years from 87 reported cases in 2009 to 225 cases in 2011.[112] In 2013, San Luis Obispo County experienced two major outbreaks at construction sites for solar facilities.[113]

---

[110] Two species of *Coccidioides* are known to cause Valley Fever: *C. immitis*, which is typically found in California, and *C. posadasii*, which is typically found outside California. *See* Center for Disease Control, Coccidioidomycosis (Valley Fever), Information for Health Professionals; http://www.cdc.gov/fungal/coccidioidomycosis/health-professionals.html.
[111] *See* Pless Comments at pp.23-33.
[112] *See id.*
[113] *See id.*

Dr. Pless concludes that soil disturbing activities during Project construction would expose workers and nearby residences to Valley Fever infection.[114] Dr. Pless concludes that the risk of infection as a result of Project activities is potentially significant and unmitigated. In particular, Dr. Pless demonstrates in her comments that conventional dust control measures that the DEIR proposes to incorporate into the Project are not effective at controlling Valley Fever as they largely focus on visible dust.[115]

While dust exposure is one of the primary risk factors for contracting Valley Fever and dust-control measures are an important defense against infection, Dr. Pless notes that visible dust is only an indicator that *Coccidioides ssp.* spores may be airborne in a given area.[116] Spores, whose size is well below the limits of human vision, may be present in air that appears relatively clear and dust free. Such ambient, airborne spores with their low settling rates can remain aloft for long periods and be carried hundreds of kilometers from their point of origin. Dr. Pless concludes that implementation of dust control measures only when visible dust is present will not provide sufficient protection for both site workers and the general public.[117] ABJC-17

The DEIR fails to identify the Project's potentially significant public health impacts by excluding from the analysis a discussion of Valley Fever. Substantial evidence in the record shows that the Project will result in potentially significant, unaddressed public health impacts due to potential Valley Fever infection. The County should prepare a revised DEIR which discloses this potentially significant impact and proposes measures that could avoid the impact, or reduce the impact to a level of insignificance.

VIII. THE HAZARDS IMPACTS ANALYSIS SECTION IN THE DEIR IS INADEQUATE

The CEQA Guidelines define the term "significant effect on the environment" as "a substantial, or potentially substantial, adverse change in any of the physical conditions within the area affected by the project including land, air, water, minerals, flora, fauna, ambient noise, and objects of historic and aesthetic ABJC-18

[114] *See id.*
[115] *See id.*
[116] *Ibid.*
[117] *See ibid.*

significance."[118] It is established that the scope of the lead agency's environmental impact analysis under CEQA must include impacts resulting from proposed industrial process changes, including any changes that are reasonably foreseeable from the proposed project.

In *Communities for a Better Environment v. South Coast Air Quality Management District*, the California Supreme Court considered ConocoPhillips' proposal to produce ultra low sulfur diesel fuel at its refinery in Wilmington, Los Angeles.[119] The project would require the increased operation of a cogeneration plant and boilers, resulting in increased emissions of air pollutants. The Court held that any such increase must be evaluated under CEQA, even though Chevron did not require the Air District's approval to increase facility operations.[120] Similarly here, the County was required to analyze the potential hazards of transitioning the SMR to refining Bakken and North American tar sands crudes. The DEIR is inadequate because it fails to include this analysis.

ABJC-18

The hazards impacts section in the DEIR is also inadequate because it is unsupported, contains major analytical errors, fails to identify and address potentially significant impacts to workers, and relies on outdated information. Finally, the hazards impacts section of the DEIR fails to meet CEQA's requirements for format and substance because it is so convoluted and complex so as to be inaccessible to the average reader. The County is required to prepare a revised analysis which addresses the potentially significant impacts identified in these comments and presents the County's analyses and conclusions in plain language.

A. The Hazards Impacts Section of the DEIR is Inadequate Because it is Unsupported

The DEIR purports to evaluate hazards associated with train derailments, rail crossing hazards, fires, explosions, and releases of hazardous materials from activities associated with the operation of the rail tank car unloading facilities.[121] In particular, the DEIR addresses the release of flammable and toxic gases, the storage and transport of crude oil, natural gas, propane, butane and other gas liquids, and crude oil spills.[122] The DEIR identifies the principal immediate

ABJC-19

[118] CEQA Guidelines, § 15382.
[119] (2010) 48 Cal.4th 310, 318.
[120] *See id.* at pp. 327-28.
[121] *See* DEIR at p. 4.7-1.
[122] *See id.*

hazards to public health at an oil refinery to include: releases of flammable gas causing vapor cloud explosions or thermal impacts from fire and flame jets; releases of flammable gas causing vapor cloud explosions, thermal impacts or thermal and "overpressure impacts" from explosions and "boiling liquid expanding vapor explosions" ("BLEVEs"); releases of odorants causing toxic impacts; and release of crude oil causing subsequent fires and related impacts.[123] The study area in the DEIR includes the rail corridors in the County associated with the Project, the existing facilities and pipelines and alternatives, and the areas in the immediate vicinity of the Project that could be affected by an upset at the proposed unloading facility.[124] For the public safety analysis, the study area in the DEIR also includes current operations at the SMR, truck transportation of hazardous materials, crude oil pipelines and existing rail facilities, as well as additional transportation hazards associated with rail transport of crude to the SMR.[125]

ABJC-19

The DEIR suggests that none of the above-listed accident scenarios result in significant impacts. With respect to transport of crude by rail, the DEIR states: "as rail traffic would occur regardless of whether additional crude oil cars were added to the train, the transportation of crude oil would not increase the accident/trauma-related injuries and fatalities associated with rail accidents."[126] With respect to transportation of hazardous materials on roadways, the DEIR states:

> Crude oil transported to the Santa Maria Pump Station, as well as sulfur and coke transported by truck and rail, would primarily cause environmental impacts in the immediate vicinity of the spill. Crude oil and solid sulfur are not acutely hazardous materials. Coke is not a hazardous material. If crude oil was spilled, fire could occur along the transportation route at the accident location. ***Given the properties of crude oil, the likelihood of an explosion is virtually non-existent and consequently explosion scenarios are not addressed further in this document.*** Fire thermal impacts would be limited to the immediately vicinity of the spill site. ***Risk levels would be minimal due to the properties of crude oil and impacts would be associated primarily with environmental issues.***[127]

---

[123] *See* DEIR at p. 4.7-8; *see also id*. at p. 4.7-21, Table 4.7.4.
[124] *See id*.
[125] *See id*. at p. 4.7-24.
[126] *See* DEIR at p. 4.7-28.
[127] *Id*. at p. 4.7-37, emphasis added.

With respect to crude spills and fires from the crude oil storage tanks, the DEIR states:

> Crude oil is processed and then stored in tanks that could spill and ignite, creating thermal radiation impacts. Thermal radiation impacts from crude oil tank fires could cause injury 220 feet away. The closest population to the crude oil tanks at the Refinery is industrial area 425 feet northeast of the crude oil storage facilities. The closest residence to the crude oil tanks, which is located within the industrial area, is 1,200 feet northeast of the tank storage area. The gas processing equipment and piping are within the Refinery, at least 1,700 feet from the Refinery fence line and the closest receptor on industrial property. ***Given the limited population and significant distance between these receptors and the Refinery, there would not be a significant risk level.***[128]

ABJC-19

With respect to transportation of hazardous materials by pipeline, the DEIR states:

> Materials transported by pipeline could cause impacts if those materials are spilled. Crude oil transported from the Santa Maria Pump Station could cause primarily environmental issues in the immediate vicinity of the spill, which could include downstream areas if a spill drains into a creek area. Crude oil is not an acutely hazardous material. If crude oil was spilled, fire could occur along the transportation route at the accident location. ***Given the properties of crude oil, the likelihood of an explosion is virtually non-existent and consequently explosion scenarios are not addressed further in this document. Fire thermal impacts would be limited to the immediately vicinity of the spill site. Risk levels would be minimal due to the properties of crude oil and impacts would be associated primarily with environmental issues . . . . In general, unlike a gas release (which occurs much quicker), the lack of public impacts from crude oil spills is due to the possibility that most persons move out of the way of a spill and are not directly affected if it catches fire.***[129]

---

[128] DEIR at p. 4.7-37, emphasis added.
[129] *Id*. at pp. 4.7-37-38, emphasis added.

The DEIR then concludes that potential hazards associated with the unloading facility are considered less than significant, and "given that the [new] trains on site would only be moving at speeds of around three miles per hour … [the risk of accidents at road crossings] would be considered less than significant."[130] For this reason, the DEIR does not require Phillips 66 to incorporate mitigation measures into the Project.[131]

The conclusion in the DEIR that the Project will not result in potentially significant hazards impacts is invalid because it is unsupported. As a preliminary matter, the DEIR and the supporting analyses do not address fire and explosion risk from the crude storage tanks.[132] Accordingly, the DEIR's conclusion that the crude oil storage tanks will not result in potentially significant impacts lacks basis. The DEIR's conclusions regarding off-site rail accidents likewise lack basis as they are totally unsupported by technical analyses or explanation.[133]

ABJC-19

Second, substantial evidence – including the very technical analyses on which the DEIR relies – shows that the Project will, contrary to the DEIR, result in potentially significant, and potentially catastrophic, impacts. In particular, substantial evidence shows that if Bakken or tar sands crudes were imported to the SMR, the risks of fire and explosion would be potentially significant. Substantial evidence also shows that the hazards impacts of oil spills from pipelines are potentially significant, resulting in injury and fatalities to on-site personnel as well as persons located outside of the Project boundary. Significantly, the DEIR omits mention of the conclusion in the underlying analysis that persons located off-site could be killed in the event of an accidental release. Substantial evidence likewise shows that train accidents within the SMR boundary may result in potentially significant on-site and off-site impacts from pool fires and BLEVEs. Finally, substantial evidence shows that accidents involving unit trains carrying crude oils will result in potentially significant impacts, including environmental damage, release of significant quantities of air contaminants, significant impacts on public services and utilities (*e.g.,* fire fighters, emergency responders) injury and even death. The County is required to prepare a revised DEIR which identifies these

---

[130] *See id*. at p. 4.7-57.
[131] *See id*. at p. 4.7-58.
[132] *See, generally*, DEIR, Appendix H.
[133] *See*, e g., DEIR Table 4.7-12 and Figure 4.7-5; *see id*. at Appendix H at H-19 and H-20.

potentially significant impacts and proposes mitigation measures to reduce impacts to a less than significant level. ABJC-19

B. The DEIR Fails to Identify Potentially Significant Risks to Workers

A DEIR must identify and focus on the possible significant environmental impacts of a proposed project.[134] "An evaluation of the environmental effects of a proposed project need not be exhaustive, but the sufficiency of an EIR is to be reviewed in light what is reasonably feasible."[135] What is "reasonably feasible" is a function of "factors such as the magnitude of the project at issue, the severity of its likely environmental impacts . . ." and other factors.[136] The DEIR declines to identify and address risks to workers stating,

> Occupational risk, which is governed by state and federal OSHAs is considered to be more voluntary and is generally judged according to more lenient standards of significance than those used for involuntary exposure.[137]

ABJC-20

Accordingly, the DEIR does not identify a significance threshold for worker impacts and does not identify or assess potential risks to workers as a result of the Project. These omissions render the DEIR inadequate.

Here, Project impacts to workers, including injury and fatality, are identified in the DEIR's consultant's technical analyses of Project hazards.[138] These impacts should have been addressed in the DEIR because the County is already in possession of data showing that Project impacts to workers are potentially significant.

The County is required to identify the Project's possible significant environmental impacts in the DEIR. The County should prepare a revised DEIR which identifies and analyzes workers impacts, and proposes mitigation measures to reduce impacts to a less than significant level.

---

[134] *See* CEQA Guidelines, §§ 15126 subd. (a), 15126.2 subd. (a); Pub. Resources Code, § 21100, subd. (b)(1).
[135] CEQA Guidelines, § 15151.
[136] CEQA Guidelines, § 15204.
[137] DEIR at p. 4.7-55.
[138] *See*, *generally*, Appendix H.

C. The DEIR Fails to Identify Potential Risk of Release Due To Corrosion of Refinery Equipment

Some cost-advantaged North American crudes that could be imported by rail have a chemical composition that may cause corrosion at high temperatures, such as occur in many refining units. Elevated concentrations of sulfur compounds in some of these crudes may also lead to increased corrosion. The DEIR does not analyze the potential for increased corrosion as a result of the reasonably forseeable feedstock change at the SMR. Substantial evidence shows that a crude slate change could result in corrosion of SMR components, leading to significant accidental releases. The County should prepare a revised DEIR which discloses and analyzes the significant environmental and public health impacts for accidental, but foreseeable, releases and proposes measures that could avoid the impacts or reduce the impacts to a level of insignificance. ABJC-21

D. The Hazards Section of the DEIR Relies on Outdated Information

The DEIR fails to exhibit the requisite level of investigation with respect to hazards because it relies on outdated information. A lead agency may not rely on scientifically outdated information in assessing the significance of project impacts.[139]

> The EIR must demonstrate that the significant environmental impacts of the proposed project were adequately investigated and discussed and it must permit the significant effects of the project to be considered in the full environmental context.[140]

ABJC-22

The DEIR states that given the properties of crude oil, the likelihood of an explosion is virtually non-existent, consequently explosion scenarios are not further addressed in the DEIR.[141] The DEIR fails to address current information regarding the hazards of transporting Bakken crude by rail. This is a significant omission in the County's analysis.

---

[139] *See Berkeley Keep Jets Over the Bay Comm. v. Board of Port Comm.* (2001) 91 Cal.App.4th at 1367.
[140] *Ibid.*
[141] DEIR at p. 4.7-37.

In the past year, rail transport of crude oil has been involved in four major explosions, causing damage, prolonged emission of air contaminants, and, in some cases, severe injuries and fatalities.[142] In July 2013, an oil-train derailment and ensuing explosion and fire in Lac-Mégantic, Quebec left 47 people dead. Similar accidents occurred in Alabama and North Dakota and, most recently, in New Brunswick, Ottawa. The Pipeline and Hazardous Materials Safety Administration ("PHMSA") issued a safety alert to notify the general public, emergency responders and shippers and carriers that recent derailments and resulting fires indicate that the type of crude oil being transported from the Bakken region may be more flammable than traditional heavy crude oil.[143] The PHMSA is investigating whether Bakken crude might contain large amount of gases and related liquids such as butane, propane and ethane.[144] ABJC-22

The DEIR fails to disclose and address the observed and documented hazards unique to transporting Bakken crudes by rail. The County is required to prepare a revised DEIR which discusses recent data on the potential hazards of transporting advantaged crudes by rail. The County should also require Phillips 66 to provide an updated analysis of Project hazards and include that analysis in the revised DEIR.

E. The Hazards Impacts Section of the DEIR is Inadequate Because It is Unintelligible

EIRs must be "organized and written in a manner that will be meaningful and useful to decision makers and to the public."[145] For this reason, the CEQA Guidelines instruct that EIRs follow a "clear format" and be written in "plain ABJC-23

---

[142] *See* Russell Gold & Lynn Cook, *Cities Grapple With Oil-Train Safety*, Wall Street Journal, Vo. CCLXIII NO.12, Jan. 15, 2014, attached as **Attachment 5**; Steve Almasy, *North Dakota train collision ignites oil cars; fire to burn out*, CNN US, Dec. 30, 2013, attached as **Attachment 6**; *Evacuation lifted for Casselton, ND following fiery train derailment*, Fox News, Dec. 31, 2013, *available at* http://www.foxnews.com/us/2013/12/31/no-injuries-reported-in-fiery-north-dakota-train-derailment/ (last accessed, Jan. 24, 2014), attached as **Attachment 7**.

[143] Pipeline and Hazardous Materials Safety Administration, *Safety Alert: Preliminary Guidance from Operation Classification*, *available at* http://www.phmsa.dot.gov/portal/site/PHMSA/menuitem.6f23687cf7b00b0f22e4c6962d9c8789/?vgnextoid=c6efec1c60f23410VgnVCM100000d2c97898RCRD&vgnextchannel=d248724dd7d6c010VgnVCM10000080e8a8c0RCRD&vgnextfmt=print (last accessed Jan. 21, 2014).

[144] Gold & Cook, Wall Street Journal, *Cities Grapple With Oil-Train Safety*, Jan. 15, 2014.

[145] Pub. Resources Code, § 21003 subd. (b).

language."[146] The hazards impacts section of the DEIR fails to meet CEQA's basic requirements for format and content because it is unintelligible.

First, the DEIR fails to rely on a significance threshold that can be understood by decisionmakers and the general public, obscuring the Project's potentially significant impacts on the environment. In particular, the DEIR rejects the County's significance threshold, defining a significant risk to include "a risk of explosion or release of hazardous substances (*e.g.* oil, pesticides, chemicals, radiation) or exposure of people to hazardous substances, or create any other health hazard or potential hazard."[147] Instead, the DEIR opts for a quantitative, risk-based criteria which deems a risk significant if it is "within the amber or red regions of the Santa Barbara County Safety Criteria."[148] The Santa Barbara County Safety Criteria is nowhere articulated in the DEIR and the information that is provided in the DEIR does not assist the public or decisionmakers in understanding how this threshold is being applied to assess Project impacts.[149]

ABJC-23

The DEIR also fails to support its selection of the quantitative, risk-based criteria with substantial evidence. In particular, the DEIR states that the risk-based criteria was selected because "San Luis Obispo County does not have a process to address risk of upset and CEQA thresholds."[150] This claim is contradicted by the DEIR which defines the County's significance threshold to include "a risk of explosion or ***release of hazardous substances*** (*e.g.* oil, pesticides, chemicals, radiation) . . . ."[151]

Second, the DEIR fails to apply the significance thresholds that are identified in the DEIR to the impacts that are addressed in the County's draft analysis. In addition, the County's draft conclusions regarding the significance of Project impacts are scattered throughout the hazards impacts section of the DEIR, precluding a clear articulation of the DEIR's logic – i.e. environmental setting, the

---

[146] *See* CEQA Guidelines, §§ 15006, subd. (q), (r), 15120, 15140.
[147] *See* DEIR at p. 4.7-55, internal quotations omitted.
[148] *See* DEIR at p. 4.7-55.
[149] *See*, *e.g,* DEIR, at p. 4.7-55, "The thresholds provide specific zones (i.e., green, amber, and red) on a risk profile curve to guide the determination of significance or insignificance based on the estimated probability and consequence of an accident. In general, risk levels in the green area would be less than significant and therefore acceptable, while risk levels in the amber and red zones would be significant. Risk profiles plot the frequency of an event against the consequence in terms of fatalities or injuries; frequent events with high consequence have the highest risk level."
[150] *See* DEIR at p. 4.7-55.
[151] *See ibid*, emphasis added.

change to the physical environment as a result of the Project, articulation of significance threshold for each impact that is studied, and conclusion regarding the significance of the change as a result of the Project with respect to each impact studied.

Third, the hazardous impacts analysis relies on technical analyses that cannot be understood by the average reader. The analyses provided in Appendix H are inaccessible to the general public and the DEIR fails to provide a roadmap for the analysis. The County is required to prepare an EIR that is written in plain language. ABJC-23

The County should prepare a revised DEIR which includes an adequate hazards impacts analysis. As described above, the current analysis is not meaningful or useful for the public or decisionmakers and is, therefore, inadequate under CEQA. The revised hazards impacts section should also address the Project's potentially significant impacts consistent with these comments.

IX. MITIGATION MEASURES PROPOSED IN THE DEIR ARE INADEQUATE

In enacting CEQA, the Legislature declared that it is "the policy of the state that public agencies should not approve projects as proposed if there are feasible alternatives or feasible mitigation measures available which would substantially lessen the significant environmental effects of such projects."[152] An EIR is inadequate unless it includes "a detailed statement setting forth . . . mitigation measures proposed to minimize [the project's] significant effects on the environment."[153] CEQA requires lead agencies to incorporate all feasible mitigation measures into a project to reduce the project's potentially significant impacts to a level of insignificance.[154] Finally, CEQA requires the lead agency to find, based on substantial evidence, "that the mitigation measures are required in or incorporated into the project; or that the measures are the responsibility of another agency and have been, or can and should be, adopted by the other agency."[155] ABJC-24

[152] *See* Pub. Resources Code, § 21002.
[153] *See* Pub. Resources Code, § 21100 subd. (b)(3); *see also* CEQA Guidelines, §§ 15126 subd. (e).
[154] *See* Pub. Resources Code, § 21081 subd. (a)(1)-(3); CEQA Guidelines, §§ 15002 subd. (a)(3), 15021 subd. (a)(2), 15091 subd. (a)(1).
[155] *See Federation of Hillside & Canyon Associations v. City of Los Angeles* (2000) 83 Cal.App.4th 1252, 1260, internal quotations omitted.

The courts and the California Resources Agency have also imposed several parameters for the adequacy of mitigation measures. We address some of the relevant criteria here. First, the lead agency may not defer the formulation of mitigation measures until a future time, unless the EIR also specifies the specific performance standards capable of mitigating the project's impacts to a less than significant level.[156] Deferral is impermissible where an agency "simply requires a project applicant to obtain a . . . report and then comply with any recommendations that may be made in the report."[157] Second, a public agency may not rely on mitigation measures of uncertain efficacy or feasibility.[158] Third, "[m]itigation measures must be fully enforceable through permit conditions, agreements, or other legally binding instruments."[159] Fourth, mitigation measures that are vague or so undefined that it is impossible to evaluate their effectiveness are legally inadequate.[160] ABJC-24

As explained in the following paragraphs, the DEIR fails to incorporate feasible mitigation measure into the Project. The DEIR also impermissibly defers the formulation of mitigation measures for the Project's potentially significant operational emissions of diesel particulates and ozone precursors. Other measures proposed in the DEIR fail to meet CEQA's requirements and should be revised consistent with these comments.

A. Mitigation Measure AQ-2 is Feasible and the County is Required to Incorporate Mitigation Measure AQ-2 Into the Project

The DEIR concludes that "the emissions from the rail spur and associated importation of crude oil by rail would exceed the SLOAPCD [San Luis Obispo County Air Pollution Control District] thresholds for operations" for ROGs and NOx.[161] The DEIR further finds that with the implementation of mitigation ABJC-25

[156] *See* CEQA Guidelines, § 15126.4 subd. (a)(1)(B); *see also Endangered Habitats League v. County of Orange* (2005) 131 Cal.App.4th 777, 793-94; *Defend the Bay v. City of Irvine* (2004) 119 Cal.App.4th 1261, 1275.
[157] *Defend the Bay v. City of Irvine* (2004) 119 Cal.App.4th 1261, 1275.
[158] *Kings County Farm Bureau v. City of Hanford* (1990) 221 Cal.App.3d 692, 727 (finding groundwater purchase agreement inadequate mitigation measure because no record evidence existed that replacement water was available).
[159] CEQA Guidelines, § 15126.4 subd. (a)(2).
[160] *San Franciscans for Reasonable Growth v. City & County of San Francisco* (1984) 151 Cal.App.3d 61,79.
[161] DEIR at p. 4.3-45.

measure AQ-2 and the application of ROG and NO_x offsite reductions, impacts would be less than significant with mitigation. However, the DEIR also states that the County could be preempted by Federal law from mitigating rail emissions outside of the SMR and, therefore, may not have the authority to require offsite ROG and NOx reductions for the Union Pacific mainline emissions within the County.[162]

In relevant part, Mitigation Measure AQ-2 provides:

> [L]ocomotive emissions shall be mitigated to the extent feasible through the contracting arrangement that increase the use of Tier 1 and better locomotives. If emissions of ROG+NOx with the above mitigations still exceed the thresholds, the Applicant shall secure SLOCAPCD-approved off-site reductions in ROG + NOx emissions to ensure that project-related ROG + NOx emissions within SLO County do not exceed the SLOCAPCD thresholds for the life of the project.
>
> Prior to issuance of Notice to Proceed, the Applicant shall implement a program, including training and procedures, to limit all locomotive onsite idling to no more than 15 consecutive minutes except when idling is required for safety purposes.

ABJC-25

To summarize, Mitigation Measure AQ-2 requires Phillips 66 to contract with Union Pacific to arrange for the use of Tier 1 and better locomotives and implement a program to limit onsite idling of locomotives. We discuss each requirement in turn.

1. <u>Use of Tier 1 and Better Locomotives</u>

The DEIR does not identify why the County's regulatory authority may be preempted, however, information in the Project file suggests that the DEIR may be referring to the Interstate Commerce Commission Termination Act of 1995 ("ICCTA"). The ICCTA grants the Surface Transportation Board ("STB") exclusive jurisdiction over interstate transportation by rail carrier and facilities that are an integral part of the railroad's interstate operations.[163] The STB lacks jurisdiction

ABJC-26

[162] *See ibid.*
[163] *See* 49 U.S.C. § 10501 subd. (b); *Kawasaki Kisen Kaisha Ltd. v. Regal-Beloit Corp.* (2010) 561 U.S. 89; *Flynn v. Burlington Northern Santa Fe Corp.*, (2000) 98 F.Supp.2d 1186, 1189.)

over activities proposed on non-railroad owned land and railroad activities that are not integral to a railroad's interstate operations, such as manufacturing facilities and truck transfer facilities.[164]

Even where the STB has jurisdiction, State and local regulation is not preempted where the regulation carries the force of federal law, such as a state regulation promulgated pursuant to the Clean Air Act or the Clean Water Act and which was approved by the U.S. Environmental Protection Agency ("EPA").[165] State and local regulations are also not preempted where the regulation is one of general application, having a remote or incidental effect on rail transportation, and does not unreasonably burden rail transportation.[166] Whether a state or local regulation unreasonably burdens interstate commerce is a question of fact.[167] "The ICCTA preempts all state laws that may reasonably be said to have the effect of managing or governing rail transportation, while permitting the continued application of laws having a more remote or incidental effect on rail transportation. What matters is the degree to which the challenged regulation burdens rail transportation . . . ."[168]

ABJC-26

It is difficult to see how the County's authority could be federally preempted in this case. The STB does not have jurisdiction over the Project. Moreover, a permit condition requiring ***Phillips 66*** to source feedstock via Tier 1 and cleaner locomotives does not regulate Union Pacific's interstate operations. State regulation of in-state actors, which may impact contractual arrangements in interstate commerce, does not burden interstate commerce.[169]

Federal preemption is not triggered here because the proposed rail spur extension is not subject to STB jurisdiction. Phillips 66 proposes to construct a rail spur extension, rail car unloading facilities and related structures wholly within the Santa Maria Refinery, at the terminus of an existing rail spur. These activities are not subject to STB jurisdiction because they are proposed on land not owned by Union Pacific. The Project is also neither integral nor accessory to Union Pacific's interstate operations. The crude that will be offloaded at the Santa Maria Refinery will be processed at the Santa Maria Refinery. No crude would be transported out

---

[164] *See Nicholson v. I.C.C.* 711 F.2d 364, 367-68 (D.C. Cir. 1983).
[165] *Association of American Railroads*, *supra*, 622 F.3d at 1098; *Flynn*, *supra*, 98 F.Supp.2d at 1189.
[166] *Association of American Railroads*, *supra*, 622 F.3d 1094 at 1097.
[167] *See id.*
[168] *Id.* at 1097, internal quotations omitted.
[169] *Rocky Mountain Farmers Union v. Corey* (2013 9th Cir.)730 F.3d 1070,1103.

of the refinery by rail.[170] Finally, the DEIR identifies no federal statute or regulation prohibiting or restricting Union Pacific from using Tier 1 and cleaner locomotives.

The County is required to incorporate all feasible mitigation measures into the Project.[171] A mitigation measure requiring Phillips 66 to source feedstock via Tier 1 and cleaner locomotives is legally feasible. The DEIR provides no evidence that the measure is infeasible for any other reason. Accordingly, the County is required to incorporate the requirement into the Project. ABJC-26

2. Limits on Locomotive Idling

The ICCTA preempts state and local regulation of emissions from idling trains.[172] However, Phillips 66 may enter into a voluntary agreement with Union Pacific to limit locomotive idling and the County is authorized to direct Phillips 66 to endeavor to enter into such an agreement. Voluntary agreements between local jurisdiction and railroads to reduce emissions from trains are feasible and have precedent in California. In fact, Union Pacific is party to a voluntary statewide agreement with the California Air Resources Board which includes an idling-reduction program.[173] The agreement applies to rail yards in California and requires Union Pacific to equip virtually all intrastate locomotives based in California with automatic idling-reduction devices that limit idling to no more than 15 consecutive minutes.[174] ABJC-27

The County is required to incorporate all feasible mitigation measures into the Project.[175] A mitigation measure requiring Phillips 66 to endeavor to enter into a contractual agreement with Union Pacific to limit onsite idling of locomotives is legally feasible. The DEIR provides no evidence that the measure is infeasible for

---

[170] *See* DEIR, at p. ES-5.
[171] *See* Pub. Resources Code, § 21081 subd. (a)(1)-(3); CEQA Guidelines, §§ 15002 subd. (a)(3), 15021 subd. (a)(2), 15091 subd. (a)(1).
[172] *Association of American Railroads v. South Coast Air Quality Management District* (9th Cir. 2010) 622 F.3d 1094, 1097.
[173] *See* ARB/Railroad Statewide Agreement Particulate Emissions Reductions Program at California Rail Yards, June 2005, *available at* http://www.arb.ca.gov/railyard/ryagreement/ryagreement.htm (last accessed Jan. 23, 2014).
[174] *Id* at C.1(a)-(b).
[175] *See* Pub. Resources Code, § 21081 subd. (a)(1)-(3); CEQA Guidelines, §§ 15002 subd. (a)(3), 15021 subd. (a)(2), 15091 subd. (a)(1).

any other reason. Accordingly, the County is required to incorporate the requirement into the Project. ABJC-27

B. Mitigation Measure WR-1(a) Is Impermissibly Vague

The DEIR concludes that Project demolition, grading and construction could result in incidental spills of petroleum products or other contaminants that could adversely affect water quality.[176] The DEIR also finds that incidental spills of oil and other petroleum products during Project operations and, in particular, during rail car unloading could also occur.[177] The DEIR then concludes that the Project could result in potentially significant impacts to water quality because onsite soils are excessively drained, with a high capacity to vertically transmit water.[178] The DEIR proposes Mitigation Measure WR-1(a) as one among several measures to reduce potential spill impacts.[179]

Mitigation Measure WR-1(a) provides:

> During construction and operations, oil spills shall be contained and cleaned according to measures outlined in the California Stormwater Quality Association Best Management Practice Handbook.[180]

ABJC-28

The measure is inadequate as drafted because it fails to specify the performance standards capable of reducing Project impacts to water quality to a level of insignificance.

A public agency may not rely on mitigation measures of uncertain efficacy or feasibility.[181] Mitigation measures that are vague or so undefined that it is impossible to evaluate their effectiveness are legally inadequate.[182] Here, Mitigation Measure WR-1(a) fails to identify the best management practices that

---

[176] *See* DEIR at p. 4.13-10.
[177] *See ibid.*
[178] *See* DEIR at p. 4.13-11.
[179] *See ibid.*
[180] *See ibid.*
[181] *Kings County Farm Bureau v. City of Hanford* (1990) 221 Cal.App.3d 692, 727 (finding groundwater purchase agreement inadequate mitigation measure because no record evidence existed that replacement water was available).
[182] *San Franciscans for Reasonable Growth v. City & County of San Francisco* (1984) 151 Cal.App.3d 61, 79.

should be incorporated into the Project and is therefore impermissibly vague. Additionally, the public and decisionmakers are precluded from evaluating the efficacy of Mitigation Measure WR-1(a) because the referenced standards are not incorporated into the DEIR or the DEIR appendices.

ABJC-28

Mitigation Measure WR-1(a) should be revised to include a listing of the best management practices that should be incorporated into the Project to reduce impacts to a less than significant level. Absent this information, the County lacks the substantial evidence to conclude that Project impacts to water quality have been reduced to a less than significant level.

C. Mitigation Measure AQ-2(a) Impermissibly Defers the Formulation of Mitigation Measures

The lead agency may not defer the formulation of mitigation measures until a future time, unless the EIR also specifies the specific performance standards capable of mitigating the project's impacts to a less than significant level.[183] Deferral is impermissible where an agency "simply requires a project applicant to obtain a . . . report and then comply with any recommendations that may be made in the report."[184] Mitigation Measure AQ-2(a) impermissibly defers the formulation of mitigation measures.

ABJC-29

In relevant part, Mitigation Measure AQ-2(a) states:

> Prior to issuance of Notice to Proceed, the Applicant *shall investigate methods for reducing the onsite emissions*, both from fugitive components and from locomotives.[185]

As drafted, AQ-2(a) fails to ensure that the Project's air quality impacts will be reduced to a less than significant level, fails to specify specific performance standards, and is unenforceable. The measure should be revised to specify the methods that will be implemented to reduce Project emissions to a less than significant level and require Phillips 66 to incorporate the methods into the Project.

---

[183] *See* CEQA Guidelines, § 15126.4 subd. (a)(1)(B); *see also Endangered Habitats League v. County of Orange* (2005) 131 Cal.App.4th 777, 793-94; *Defend the Bay v. City of Irvine* (2004) 119 Cal.App.4th 1261, 1275.
[184] *Defend the Bay v. City of Irvine* (2004) 119 Cal.App.4th 1261, 1275.
[185] DEIR at p. 4.3-43 (emphasis added).

D. Mitigation Measures AQ-2(a) and AQ-3 Preclude a County Finding That The Measures Will Be Incorporated Into the Project

CEQA requires the lead agency to find, based on substantial evidence, "that the mitigation measures are required in or incorporated into the project; or that the measures are the responsibility of another agency and have been, or can and should be, adopted by the other agency."[186] Mitigation Measures AQ-2(a) and AQ-3 each require Phillips 66 to secure APCD-approved off-site reductions to ensure that operational emissions of ROG and NOx and diesel particulate matter, respectively, are reduced to a less than significant level.[187] Each measure provides:

> Coordination with the SLOCAPCD should begin at least six (6) months prior to issuance of operational permits for the Project to allow time for . . . SLOCAPCD to review and approve the off-site mitigation approach.[188]

ABJC-30

As drafted, Mitigation Measures AQ-2(a) and AQ-3 preclude the County from making the required finding that the relevant mitigation will be adopted by the other agency. In particular, the measures do not require APCD's approval of a mitigation approach before the County approves the Project and includes no enforcement provision. The measures should be revised to require APCD to approve offsite mitigation prior to County issuance of a Notice to Proceed to the Applicant and require implementation of the approved mitigation approach. Absent such requirements, the County would lack the substantial evidence to conclude that Mitigation Measures AQ-2(a) and AQ-3 can and should be adopted by the APCD.

E. Mitigation Measures AQ-6 Fails to Specify Performance Standards

ABJC-31

A lead agency may not defer the formulation of mitigation measures until a future time, unless the EIR also specifies the specific performance standards

---

[186] *See Federation of Hillside & Canyon Associations v. City of Los Angeles* (2000) 83 Cal.App.4th 1252, 1260, internal quotations omitted.
[187] *See* DEIR at pp. 4.3-43, 4.3-46.
[188] *See ibid.*

X. CONCLUSION

We thank the County for this opportunity to comment on the DEIR and urge the County to prepare and circulate a revised DEIR which includes a complete Project description, identifies the Project's potentially significant impacts, and requires Phillips 66 to incorporate all feasible mitigation measures into the Project to reduce impacts to a less than significant level.

Sincerely,

Elizabeth Klebaner

EK:clv
Attach.

Attachment 1

ADAMS BROADWELL JOSEPH & CARDOZO
A PROFESSIONAL CORPORATION
ATTORNEYS AT LAW
601 GATEWAY BOULEVARD, SUITE 1000
SOUTH SAN FRANCISCO, CA 94080-7037
TEL: (650) 589-1660
FAX: (650) 589-5062
eklebaner@adamsbroadwell.com

DANIEL L. CARDOZO
THOMAS A. ENSLOW
TANYA A. GULESSERIAN
MARC D. JOSEPH
ELIZABETH KLEBANER
RACHAEL E. KOSS
JAMIE L. MAULDIN
ELLEN L. TRESCOTT

SACRAMENTO OFFICE
520 CAPITOL MALL, SUITE 350
SACRAMENTO, CA 95814-4721
TEL: (916) 444-6201
FAX: (916) 444-6209

January 9, 2014

Via Email and U.S. Mail

Mr. Murry Wilson
Department of Planning and Building
San Luis Obispo County
976 Osos St., Rm. 200
San Luis Obispo, CA 93408-2040
mwilson@co.slo.ca.us

Re: Phillips 66 Rail Spur Extension Project – Public Comment Deadline Extension Request (SCH# 2013071028)

Dear Mr. Wilson:

On behalf of the State Building and Construction Trades Council of California, we respectfully request that the County extend the time to comment on the Phillips 66 Company Rail Spur Extension Project Public Draft Environmental Impact Report and Vertical Coastal Access Project Assessment ("DEIR"). This request is based on the County's failure to make all documents that are referenced in the DEIR available for the duration of the comment period, as required by Public Resources Code section 21092(b)(1) and California Code of Regulations, title 14, section 15087(c)(5).

The County released the DEIR for public review on November 27, 2013, the day before the Thanksgiving Holiday. On the same day, our office emailed a records request to the County for immediate access to documents referenced in the DEIR.[1] On December 11, 2013, the County informed us in writing that documents

[1] *See* Letter from Meghan A. Quinn to Murry Wilson regarding Request for Immediate Access to DEIR and Documents Referenced in the DEIR – Phillips 66 Rail Spur Extension Project and Vertical Coastal Access Project, SCH # 2013071028, Nov. 27, 2013, attached as **Attachment 1**.

printed on recycled paper

referenced in the DEIR would be provided to our firm by December 13, 2013.[2] Our office did not receive the responsive materials until December 16th.[3]

On December 24, 2013, our office sent a second request for documents referenced in the DEIR.[4] In a letter dated December 30, 2013, your office indicated that additional responsive materials may be forthcoming.[5] On December 31, 2013, I called the Office of the County Counsel to discuss the status of our records requests and to request that the County add to the forthcoming production referenced documents that I would specifically identify in an email to Ms. McDonald.[6] On January 3, 2014, our office received a letter from the County confirming that certain records may have been excluded from the County's December 16th production and that the remaining records would be sent on January 10, 2014.[7] To date, the County has not completed its response to our November 27, 2013 request for all documents relied on in the DEIR.

The County is required to make the DEIR and all documents relied on in the DEIR available for the duration of the public comment period. (*See* Pub. Resources Code, § 21092 subd. (b)(1); Cal. Code Regs., tit. 14, § 15087(c)(5).) Access to these materials is essential to our review and evaluation of the County's draft findings. Despite our efforts to obtain immediate access to all materials referenced in the DEIR on the first day of the public comment period, the County has not yet granted us access to all responsive materials.

For the above reasons, we request an extension of the comment period allowing us the 61 days provided by the County's Notice of Availability, to review

---

[2] *See* Letter from Rita L. Neal to Meghan A. Quinn, regarding Public Records Act Request Dated November 27, 2013 Phillips Rail Spur Extension Project, Dec. 11, 2013, attached as **Attachment 2.**
[3] *See* Letter from Rita L. Neal to Meghan A. Quinn, regarding Public Records Act Request Dated November 27, 2013 Phillips 66 Rail Spur Extension Project, Dec. 13, 2013 (stamped received December 16, 2013), attached as **Attachment 3.**
[4] *See* Letter from Elizabeth Klebaner to Dan Buckshi and Annette Ramirez, regarding Phillips 66 Company Rail Spur Extension and Vertical Access Project (SCH # 2013071028), attached as **Attachment 4.**
[5] *See* Letter from Rita L. Neal to Meghan A. Quinn, regarding Public Records Act Request Dated November 27, 2013 Phillips 66 Rail Spur Extension Project and Vertical Coastal Access Project, Dec. 30, 2013, attached as **Attachment 5.**
[6] *See* Email from Elizabeth Klebaner to Ms. Whitney McDonald, regarding Phillips 66 Santa Maria Rail Spur Extension Project, attached as **Attachment 6.**
[7] *See* Letter from Rita L. Neal to Elizabeth Klebaner regarding Public Records Act Request Dated December 24, 2013 Phillips 66 Rail Spur Extension Project, Jan. 3, 2014, attached as **Attachment 7.**

the DEIR and the materials referenced in the DEIR. We request that the comment period be tolled from November 27th, 2013, the day of our initial request, and commence running the day we receive a complete response from the County.

As the public comment deadline is fast approaching, we would appreciate the County's prompt response to this request. Thank you for your attention to this matter and please contact me if you have any questions.

Sincerely,

Elizabeth Klebaner

EK:clv
cc: Whitney McDonald (email only)
Attach.

ATTACHMENT 1

ADAMS BROADWELL JOSEPH & CARDOZO
A PROFESSIONAL CORPORATION
ATTORNEYS AT LAW
601 GATEWAY BOULEVARD, SUITE 1000
SOUTH SAN FRANCISCO, CA 94080-7037

TEL: (650) 589-1660
FAX: (650) 589-5062
mquinn@adamsbroadwell.com

DANIEL L. CARDOZO
THOMAS A. ENSLOW
TANYA A. GULESSERIAN
MARC D. JOSEPH
ELIZABETH KLEBANER
RACHAEL E. KOSS
JAMIE L. MAULDIN
ELLEN L. TRESCOTT

SACRAMENTO OFFICE
520 CAPITOL MALL, SUITE 350
SACRAMENTO, CA 95814-4721
TEL: (916) 444-6201
FAX: (916) 444-6209

November 27, 2013

Via U.S. and Electronic Mail

Attn: Murry Wilson
San Luis Obispo County Department of Planning and Building
976 Osos St., Rm. 200
San Luis Obispo, CA 93408-2040

Email: mwilson@co.slo.ca.us

RE: Request for Immediate Access to DEIR and Documents Referenced in DEIR – Phillips 66 Company Rail Spur Extension Project and Vertical Coastal Access Project, SCH # 2013071028

Dear Mr. Wilson:

We are writing to request ***immediate access*** to any and all documents referenced or relied upon in the Draft Environmental Impact Report ("DEIR") for the Phillips 66 Company Rail Spur Extension Project and Vertical Coastal Access Project (collectively referred to as the "Project"), SCH # 2013071028. We are also writing to request a CD of the DEIR. This request excludes paper copies of the DEIR and the documents provided at the following link: http://www.slocounty.ca.gov/planning/environmental/EnvironmentalNotices/railproject.htm.

Our request for the DEIR and all documents referenced or relied upon in the DEIR is made pursuant to the California Environmental Quality Act ("CEQA"), which requires that all documents referenced in an environmental review document be made available to the public for the entire comment period.[1]

[1] See Pub. Resources Code, § 21092, subd. (b)(1); 14 Cal. Code Reg. § 15087(c)(5).

printed on recycled paper

We are also writing to request separately, pursuant to the California Public Records Act.[2], immediate access to any and all correspondence, resolutions, memos, notes, analysis, electronic mail messages, files, maps, charts, and/or any other documents referring to or relating to the Project. This request is also made pursuant to Article I, section 3(b) of the California Constitution, which provides a constitutional right of access to information concerning the conduct of the government. Article I, section 3(b) provides that any statutory right to information shall be broadly construed to provide the greatest access to government information and further requires that any statute that limits the right of access to information shall be narrowly construed.

Pursuant to Government Code section 6253.9, if the requested documents are in electronic format and are 10 MB or less (or can be easily broken into chunks of 10 MB or less), please email them to jlaurain@adamsbroadwell.com as attachments. If any of the requested materials are available on the Internet, we request that the County direct us to the appropriate site for accessing the documents. Also, please send the CD of the DEIR, and the requested materials to the following address:

U.S. Mail

Janet Laurain
Adams Broadwell Joseph & Cardozo
601 Gateway Boulevard, Suite 1000
South San Francisco, CA 94080-7037

Please call Janet Laurain at (650) 589-1660 if you have any questions. Thank you for your assistance with this matter.

Sincerely,

Meghan A. Quinn/ljl

Meghan A. Quinn

MAQ:ljl

---

[2] Gov. Code, §§ 6250, et seq.

ATTACHMENT 2

OFFICE OF THE

COUNTY COUNSEL

COUNTY OF SAN LUIS OBISPO
COUNTY GOVERNMENT CENTER, ROOM D320
SAN LUIS OBISPO, CA 93408
TELEPHONE (805) 781-5400
FAX (805) 781-4221

RITA L. NEAL
COUNTY COUNSEL

ASSISTANT
TIMOTHY MCNULTY

CHIEF DEPUTY
NINA NEGRANTI

DEPUTIES
ANN CATHERINE DUGGAN
PATRICK J. FORAN
LESLIE H. KRAUT
SUSAN HOFFMAN
CHERIE J. VALLELUNGA
SHANNON G. MATUSZEWICZ
CARRIE WINTERS
WHITNEY G. MCDONALD
ERICA STUCKEY
DAVID STOTLAND

December 11, 2013

VIA EMAIL AND U.S. MAIL

Meghan A. Quinn
Adams Broadwell Joseph & Cardozo, APC
601 Gateway Boulevard, Suite 1000
South San Francisco, CA 94080-7037

Re: Public Records Act Request Dated November 27, 2013
Phillips 66 Rail Spur Extension Project

Dear Ms. Quinn:

The County of San Luis Obispo ("County") makes the following response to your Public Records Act request dated November 23, 2013, which the County Department of Planning and Building ("Department") received via email on November 27, 2013.

You have requested records referenced or relied upon in the Draft Environmental Impact Report ("DEIR") for the Phillips 66 Rail Spur Extension Project and Vertical Coastal Access Project ("the Project"), and all correspondence, resolutions, memos, notes analysis, emails, files, maps, charts, and any other documents relating to the Project.

As we discussed on December 6, 2013, the Department will provide the records referenced or relied upon in the DEIR, as well as the Project application and all applicant submittals provided to date, via email at the email address identified in your request no later than December 13, 2013. The remainder of the records will take additional time to compile due to the volume of materials sought and the different locations they are currently kept. As a result, the County requires an additional fourteen days to provide a full and complete response pursuant to Government Code section 6253(c).

Please be aware that the County intends to withhold from disclosure certain records you have requested pursuant to the attorney-client privilege, the deliberative process privilege, and/or Government Code section 6254(a). A more detailed explanation of the privileges claimed will be included with the County's further written response.

In the meantime, please do not hesitate to contact me with any questions or concerns.

Very truly yours,

RITA L. NEAL
County Counsel

By: Whitney McDonald
Deputy County Counsel

WM:nw
Enclosure
cc: Ramona Hedges
Murry Wilson
133275
4400nwltr.docx

ATTACHMENT 3

OFFICE OF THE

COUNTY COUNSEL

COUNTY OF SAN LUIS OBISPO
COUNTY GOVERNMENT CENTER, ROOM D320
SAN LUIS OBISPO, CA 93408
TELEPHONE (805) 781-5400
FAX (805) 781-4221

RITA L. NEAL
COUNTY COUNSEL

ASSISTANT
TIMOTHY MCNULTY

CHIEF DEPUTY
NINA NEGRANTI

DEPUTIES
ANN CATHERINE DUGGAN
PATRICK J. FORAN
LESLIE H. KRAUT
SUSAN HOFFMAN
CHERIE J. VALLELUNGA
SHANNON G. MATUSZEWICZ
CARRIE WINTERS
WHITNEY G. MCDONALD
ERICA STUCKEY
DAVID STOTLAND

December 13, 2013

VIA U.S. MAIL

Meghan A. Quinn
Adams Broadwell Joseph & Cardozo, APC
601 Gateway Boulevard, Suite 1000
South San Francisco, CA 94080-7037

Re: Public Records Act Request Dated November 27, 2013
Phillips 66 Rail Spur Extension Project

Dear Ms. Quinn:

As discussed in my letter dated December 11, 2013, I am enclosing herewith a CD containing all of the reference materials for the Draft Environmental Impact Report issued by the San Luis Obispo County Department of Planning and Building ("Department") concerning the Phillips 66 Rail Spur Extension Project.

The Department is continuing to compile additional records responsive to your Public Records Act request and will provide a full and complete response pursuant to Government Code section 6253(c) no later than December 20, 2013.

In the meantime, please do not hesitate to contact me with any questions or concerns.

Very truly yours,

RITA L. NEAL
County Counsel

By: Whitney G. McDonald
Deputy County Counsel

WM:lj
Enclosures
172ljltr.docx

ATTACHMENT 4

ADAMS BROADWELL JOSEPH & CARDOZO
A PROFESSIONAL CORPORATION
ATTORNEYS AT LAW
601 GATEWAY BOULEVARD, SUITE 1000
SOUTH SAN FRANCISCO, CA 94080-7037

TEL: (650) 589-1660
FAX: (650) 589-5062
eklebaner@adamsbroadwell.com

DANIEL L. CARDOZO
THOMAS A. ENSLOW
TANYA A. GULESSERIAN
MARC D. JOSEPH
ELIZABETH KLEBANER
RACHAEL E. KOSS
JAMIE L. MAULDIN
ELLEN L. TRESCOTT

SACRAMENTO OFFICE
520 CAPITOL MALL, SUITE 350
SACRAMENTO, CA 95814-4721
TEL: (916) 444-6201
FAX: (916) 444-6209

December 24, 2013

By: Facsimile and U.S. Mail

Dan Buckshi
County Administrative Officer
County of San Luis Obispo
Administrative Office
1055 Monterey Street, Suite D-430
San Luis Obispo, CA 93408
Fax: (805) 781-5023

Annette Ramirez
Clerk to the Board of Supervisors
County of San Luis Obispo
1055 Monterey Street, Suite D-120
San Luis Obispo, Ca 93408
Fax: (805) 781-1111

Re: Phillips 66 Company Rail Spur Extension Project and Vertical Coastal Access Project (SCH # 2013071028)

Dear Mr. Buckshi and Ms. Ramirez:

We are writing on behalf of the State Building and Construction Trades Council of California to request immediate access to all public records in the County's possession regarding the Phillips 66 Company Rail Spur Extension Project and Vertical Coastal Access Project ("Project"). Our request includes, but is not limited to any and all correspondence, resolutions, memoranda, notes, analyses, electronic mail messages, maps, charts, correspondence and audio files referring or relating to the Project.

In addition, we request all materials referenced or relied upon in the Project Draft Environmental Impact Report ("DEIR") that are not available on the County's website, including the following:

1. ConocoPhillips 2007, AB2588 Health Risk Assessment 2004 Emissions Inventory. (DEIR, at p. 4.3-59);

2. ConocoPhillips Santa Maria Facility San Luis Obispo County, California. July (DEIR, at p. 4.3-59);

3. EarthTech. 2007. Bay Area Regional Rail Plan-Technical Memorandum 4g-Summary of Capacity Issues on the Bay Area Regional Rail System. March 28, 2007 (DEIR, at p. 4.12-30);

4. LOSSAN 2010. LOSSAN Corridor Strategic Assessment Final Report. January 14, 2010 (DEIR, at p. 4.12-30);

5. ____ 2007. LOSSAN North corridor Strategic Plan. October 2007 (DEIR, at p. 4.12-30);

6. San Luis Obispo County 2010b. Department of Public Works. Traffic Volumes. 2010 (DEIR, at p. 4.12-30);

7. ____ 2010. Coast Daylight Service. December 15, 2010 (DEIR, at p. 4.12-30);

8. Washington Group International 2004. Rail Capacity Analysis-California Network-"Coast Daylight" Service between San Francisco and Los Angeles. April 7, 2004 (DEIR, at p. 4.12-30);

9. ____ 2013b. Moving Crude Oil by Rail. (DEIR, at p. 4.7-63);

10. Corsi. 2000. "Motor Carrier Industry Profile: Safety Performance Differences among Major Segments," prepared for FMCSA, DOT, DTFH61-98-X-00006. May (DEIR, at p. 4.7-64);

11. HLID, Hydrocarbon Leak and Ignition Database, Report NO. 11.4/180, May 1992, E&P Forum (DEIR, at p. 4.7-64);

12. International Association of Oil & Gas Producers (OGP), 2010a. Ignition Probabilities. OGP (DEIR, at p. 4.7-64);

13. Risk Assessment Data Directory. Report No. 434 – b1, March 2010. International Association of Oil & Gas Producers (OGP), 2010b. Consequence Modeling. OGP (DEIR, at p. 4.7-64);

14. Risk Assessment Data Directory. Report No. 434 – 7, March 2010. (DEIR, 4.7-64);

15. Lees FP. Loss Prevention in the Process Industries. Volumes 1 - 3. Butterworths, London. 1996 (DEIR, 4.7-64);

16. National Institute of Standards and Technology (NIST), 2000. Thermal Radiation from Large. (DEIR, 4.7-64);

17. Pool Fires. Fire Safety Engineering Division. Building and Fire Research Laboratory. NISTIR 6546, November. (DEIR, 4.7-64);

18. National Transportation Safety Board (NTSB), 2012. DOT-111 Tank Car Design. Presented by Paul L. Stancil, CHMM. Office of Railroad, Pipeline and Hazardous Materials Safety. (DEIR, 4.7-64);

19. Reliability and Maintainability in Perspective, (R&MIP) 3rd Edition, D.J. Smith, 1988 ISBN 0-333-46205-X. (DEIR, 4.7-64);

20. Rijnmond, 1982, "Risk Analysis of Six Potentially Hazardous Industrial Objects in the Rijnmond Area, A Pilot Study." A report to the Rijnmond Public Authority, presented by COVO Steering Committee, 1982. D. Reidel Publishing Co., Dordrecht, Holland. A compilation of data on all types of equipment failure is provided. (DEIR, 4.7-64);

21. Roberts, A.F., 2000. Analysis of Boiling Liquid Expanding Vapor Explosion (BLEVE) Events at DOE Sites. EQE International, Inc. Knoxville, TN. (DEIR, 4.7-64);

22. SBC 2004. Santa Barbara County Nuevo LPG Transportation Risk Assessment, April 2004. (DEIR, 4.7-64);

23. Secor, 2001. "Coke Ponds Site Assessment Report", SECOR International Inc., January 17, prepared for Tosco Refining Company. (DEIR, 4.7-64);

24. Steinhaus, T., S. Welch, R. Carvel, JL. Torero, 2007. "Large-Scale pool fires", Thermal Science Journal, Vol. 11 issue 3, special on fire. (DEIR, 4.7-64);

25. SuperChems Reference and User's Manual. Arthur D. Little, Inc., Cambridge, MA, 1991. (DEIR, 4.7-64);

26. Thomas, H.M. (1981). "Pipe and Vessel Failure Probability", Reliability Engineering, 2, pp. 83-124. (DEIR, 4.7-64);

27. UK Health and Safety Executive, "Development of a Method for the Determination of On-site Ignition Probabilities", Research Report 226, Daycock and Rew, WS Atkins Consultants, Ltd., 2004. (DEIR, 4.7-64);

28. U.S. Department of Transportation (DOT). 2000. "A National Risk Assessment for Selected Hazardous Materials in Transportation," prepared for the Office of Hazardous Materials. (DEIR, 4.7-64);

29. Transportation by D.F. Brown, W.E. Dunn, and A.J. Policastro. December. (DEIR, 4.7-64);

30. U.S. Department of Transportation (DOT). 2000. "A National Risk Assessment for Selected Hazardous Materials in Transportation," prepared for the Office of Hazardous Materials. (DEIR, 4.7-64);

31. Transportation by D.F. Brown, W.E. Dunn, and A.J. Policastro. December. (DEIR 4.7-65);

32. ____. 2001. "Traffic Safety Facts – 2001," DOT HS 809 472 and publication FMCSA-RI-02-002. January. (DEIR 4.7-65)

33. ____. 2001. National Highway Traffic Safety Administration "Highway Traffic Safety Facts." (DEIR 4.7-65)

34. ____. 2002. Transportation Research Board, "Regulation of Weights, Lengths and Widths of Commercial Vehicles" special report number 267. (DEIR 4.7-65); and

35. Utah Department of Environmental Quality (UDEQ). 2011. UDEQ Division of Solid & WASH-1400 (NUREG-75/014), United States Nuclear Regulatory Commission, October 1975. (DEIR 4.7-65).

This request is made pursuant to the California Environmental Quality Act ("CEQA"), which requires that all documents referenced in an environmental review document be made available to the public for the entire comment period. (*See* Pub. Resources Code, § 21092, subd. (b)(1); 14 Cal. Code Reg., § 15073.) This request is also made pursuant to the California Public Records Act, Gov. Code, §§ 6250, et seq., and Article I, section 3(b) of the California Constitution, which provides a constitutional right of access to information concerning the conduct of the government. Article I, section 3(b) further provides that any statutory right to information shall be broadly construed to provide the greatest access to government information and further requires that any statute that limits the right of access to information shall be narrowly construed.

If any of the requested items are available on the Internet, we request that the County direct us to the appropriate site for accessing the documents. Pursuant to Government Code section 6253.9, if the requested documents are in electronic format and are 10 MB or less (or can be easily broken into chunks of 10 MB or less), please email them to me as attachments. Please direct future inquiries regarding this request to the following contact:

Janet M. Laurain
Adams Broadwell Joseph & Cardozo
601 Gateway Boulevard, Ste. 1000
South San Francisco, CA 94080
jlaurain@adamsbroadwell.com
Phone: (650) 589-1660
Fax: (650) 589-5062

Thank you for your assistance with this matter.

Sincerely,

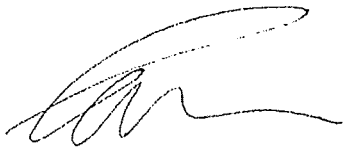

Elizabeth Klebaner

EK:ljl

cc: Janet M. Laurain (email only)

ADAMS BROADWELL JOSEPH & CARDOZO

FAX TRANSMITTAL

NOTICE – PRIVILEGED AND CONFIDENTIAL INFORMATION
This message is for addressee only. Review, distribution or copy by others is strictly prohibited. Notify us immediately by telephone if you received this message in error and return the original.

TO:	Dan Buckshi County of San Luis Obispo	**FAX NO:**	(805) 781-5023
	Annette Ramirez County of San Luis Obispo		(805) 781-1111
FROM:	Lorrie J. Lele on behalf of Elizabeth Klebaner	**DATE:**	December 24, 2013

ENCLOSURE: *Phillips 66 Company Rail Spur Extension Project and Vertical Coastal Access Project* (SCH #2013071028)

PAGES, including cover: 7

601 Gateway Boulevard, Suite 1000
South San Francisco, California 94080-7037
Telephone: (650) 589-1660
Facsimile: (650) 589-5062
E-mail: ljlele@adamsbroadwell.com

WorkCentre 5225

Transmission Report

G3 ID 9164446209

Date/Time: 12/24/2013; 11:56AM
Page: 1 (Last Page)

Local Name ABJC
Logo

Document has been sent.
Document Size 8.5X11"SEF

ADAMS BROADWELL JOSEPH & CARDOZO

FAX TRANSMITTAL

NOTICE - PRIVILEGED AND CONFIDENTIAL INFORMATION
This message is for addressee only. Review, distribution or copy by others is strictly prohibited. Notify us immediately by telephone if you received this message in error and return the original.

TO:	Dan Buckshi County of San Luis Obispo	FAX NO:	(805) 781-5023
	Annette Ramirez County of San Luis Obispo		(805) 781-1111
FROM:	Lorrie J. Lele on behalf of Elizabeth Klebaner	DATE:	December 24, 2013
ENCLOSURE:	*Phillips 66 Company Rail Spur Extension Project and Vertical Coastal Access Project* (SCH #2013071028)		
PAGES, including cover: 7			

601 Gateway Boulevard, Suite 1000
South San Francisco, California 94080-7037
Telephone: (650) 589-1660
Facsimile: (650) 589-5062
E-mail: hjlele@adamsbroadwell.com

Total Pages Scanned: 7 Total Pages Sent : 7

No.	Doc.	Remote Station	Start Time	Duration	Pages	Mode	Contents	Status
1	2588	18057815023-0788#	12-24;11:54AM	1m41s	7/ 7	ECM		CP

Note:
RE: Resend MB: Send to Mailbox BC: Broadcast MP: Multi Polling RV: Remote Service
PG: Polling RB: Relay Broadcast RS: Relay Send BF: Box Fax Forward CP: Completed
SA: Send Again EN: Engaged AS: Auto Send TM: Terminated

WorkCentre 5225

Transmission Report

G3 ID 9164446209

Date/Time: 12/24/2013; 11:57AM
Page: 1 (Last Page)

Local Name ABJC
Logo

Document has been sent.
Document Size 8.5X11"SEF

ADAMS BROADWELL JOSEPH & CARDOZO

FAX TRANSMITTAL

NOTICE – PRIVILEGED AND CONFIDENTIAL INFORMATION
This message is for addressee only. Review, distribution or copy by others is strictly prohibited. Notify us immediately by telephone if you received this message in error and return the original.

TO:	Dan Buckshi County of San Luis Obispo	FAX NO:	(805) 781-5023
	Annette Ramirez County of San Luis Obispo		(805) 781-1111
FROM:	Lorrie J. Lele on behalf of Elizabeth Klebaner	DATE:	December 24, 2013
ENCLOSURE:	*Phillips 66 Company Rail Spur Extension Project and Vertical Coastal Access Project* (SCH #2013071028)		
PAGES, including cover: 7			

601 Gateway Boulevard, Suite 1000
South San Francisco, California 94080-7037
Telephone: (650) 589-1660
Facsimile: (650) 589-5062
E-mail: ljlele@adamsbroadwell.com

Total Pages Scanned: 7 Total Pages Sent : 7

No.	Doc.	Remote Station	Start Time	Duration	Pages	Mode	Contents	Status
1	2589	8057811111	12-24;11:56AM	55s	7/ 7	SG3		CP

Note:
RE: Resend MB: Send to Mailbox BC: Broadcast MP: Multi Polling RV: Remote Service
PG: Polling RB: Relay Broadcast RS: Relay Send BF: Box Fax Forward CP: Completed
SA: Send Again EN: Engaged AS: Auto Send TM: Terminated

ATTACHMENT 5

OFFICE OF THE

COUNTY COUNSEL

COUNTY OF SAN LUIS OBISPO
COUNTY GOVERNMENT CENTER, ROOM D320
SAN LUIS OBISPO, CA 93408
TELEPHONE (805) 781-5400
FAX (805) 781-4221

RITA L. NEAL
COUNTY COUNSEL

ASSISTANT
TIMOTHY MCNULTY

CHIEF DEPUTY
NINA NEGRANTI

DEPUTIES
ANN CATHERINE DUGGAN
PATRICK J. FORAN
LESLIE H. KRAUT
SUSAN HOFFMAN
CHERIE J. VALLELUNGA
SHANNON G. MATUSZEWICZ
CARRIE WINTERS
WHITNEY G. MCDONALD
ERICA STUCKEY
DAVID STOTLAND

December 30, 2013

VIA EMAIL AND U.S. MAIL

Meghan A. Quinn
Adams Broadwell Joseph & Cardozo, APC
601 Gateway Boulevard, Suite 1000
South San Francisco, CA 94080-7037
mquinn@adamsbroadwell.com

Re: Public Records Act Request Dated November 27, 2013
Phillips 66 Rail Spur Extension Project and Vertical Coastal Access Project

Dear Ms. Quinn:

As discussed in my letters dated December 11, 2013, and December 20, 2013, I am enclosing herewith a CD containing the remaining emails, application submittals, and Initial Study materials requested in your Public Records Act request dated November 27, 2013, concerning the Phillips 66 Rail Spur Extension Project and Vertical Coastal Access Project ('Project'). The County of San Luis Obispo ('County') is withholding a number of records pursuant to the attorney-client privilege, the deliberative process privilege, and the intra-agency memoranda exemption and preliminary draft exemption provided by Government Code section 6254(a).

In addition, there are 89 pages of records available in hard copy only, which may be obtained by payment of $8.90 to the County. These records, plus the electronic records enclosed herewith and the records provided with the December 11th and December 20th letters, constitute the County's complete response to your November 27, 2013 request.

Please note that the County is in receipt of a second Public Records Act request from your office dated December 24, 2013, concerning the same project. That request seeks specific records referenced in the Draft Environmental Impact Report issued for the Project, in addition to requesting the same broader categories of records your November 27, 2013 request sought. The County believes that most, if not all, of the specifically identified records were provided on the disk sent to you with my letter dated December 11, 2013. However, the County intends to provide a separate written response to that second Public Records Act request, and a second disk containing the requested records.

Meghan A. Quinn
Re: Re: Public Records Act Request Dated November 27, 2013
Phillips 66 Rail Spur Extension Project and Vertical Coastal Access Project
December 30, 2013

If you have any questions regarding the County's responses to your request, please do not hesitate to contact me.

Very truly yours,

RITA L. NEAL
County Counsel

By: Whitney McDonald
Deputy County Counsel

WM:nw
Enclosure
cc: Elizabeth Klebaner, Esq., Adams Broadwell Joseph & Cardozo, APC
Ramona Hedges
Murry Wilson
133275
4458nwltr.docx

ATTACHMENT 6

Elizabeth Klebaner

From: Elizabeth Klebaner
Sent: Tuesday, December 31, 2013 2:17 PM
To: 'wmcdonald@co.slo.ca.us'
Cc: Meghan A. Quinn
Subject: Phillips 66 Santa Maria Rail Spur Extension Project

Hello Whitney,

It was a pleasure to speak with you today. As we discussed, I have identified additional specific documents referenced in the Rail Spur Extension Project DEIR that should be provided in response to our 11/27 and 12/24 requests. These documents are within the scope of each request and are as follows:

1. Risk Management Plan, Spill Prevention, Control and Containment Plan (DEIR, p. 4.13-13);
2. Permit to Operate (PTO) 08218r8 (DEIR, at p. 4.3-22);
3. PTO 11754r2 (DEIR, at p. 4.3-22); and
4. Annual emissions reports for 2010 (DEIR, at p. 4.3-22).

In your 12/30 letter you state that the County is sending us two additional disks containing documents referenced in the DEIR. We ask that the above listed documents be included in that production.

As regards our 12/5 Public Records Act request for pending and existing entitlements, I have confirmed that our office sent a check to the Planning Department on 12/23 to the attention of Ramona Hedges. Please advise when we can expect to receive the responsive materials.

Thank you for your assistance with this matter.

Happy New Year!

Elizabeth

Elizabeth Klebaner
Adams Broadwell Joseph & Cardozo
601 Gateway Boulevard, Suite 1000
South San Francisco, CA 94080-7037
Ph.: (650) 589-1660
Fax: (650) 589-5062
eklebaner@adamsbroadwell.com

This e-mail may contain material that is confidential, privileged and/or attorney work product for the sole use of the intended recipient. Any review, reliance or distribution by others or forwarding without express permission is strictly prohibited. If you are not the intended recipient, please contact the sender and delete all copies.

ATTACHMENT 7

OFFICE OF THE

COUNTY COUNSEL

COUNTY OF SAN LUIS OBISPO
COUNTY GOVERNMENT CENTER, ROOM D320
SAN LUIS OBISPO, CA 93408
TELEPHONE (805) 781-5400
FAX (805) 781-4221

RITA L. NEAL
COUNTY COUNSEL

ASSISTANT
TIMOTHY MCNULTY

CHIEF DEPUTY
NINA NEGRANTI

DEPUTIES
ANN CATHERINE DUGGAN
PATRICK J. FORAN
LESLIE H. KRAUT
SUSAN HOFFMAN
CHERIE J. VALLELUNGA
SHANNON G. MATUSZEWICZ
CARRIE WINTERS
WHITNEY G. MCDONALD
ERICA STUCKEY
DAVID STOTLAND

January 3, 2014

VIA EMAIL AND U.S. MAIL

Elizabeth Klebaner, Esq.
Adams Broadwell Joseph & Cardozo, APC
601 Gateway Boulevard, Suite 1000
South San Francisco, CA 94080-7037

Re: Public Records Act Request Dated December 24, 2013
Phillips 66 Rail Spur Extension Project

Dear Ms. Klebaner:

The County of San Luis Obispo ("County") makes the following response to your Public Records Act request dated December 24, 2013, which the County received via facsimile on December 24, 2013.

You have requested records referenced or relied upon in the Draft Environmental Impact Report ("DEIR") for the Phillips 66 Rail Spur Extension Project and Vertical Coastal Access Project ("the Project"), and an and all correspondence, resolutions, memos, notes analysis, emails, files, maps, charts, and any other documents relating to the Project.

As we discussed on December 30, 2013, the Department of Planning and Building ("Department") has provided most of the requested documents in response to a Public Records Act request from your firm dated November 27, 2013. Disks of electronic records were sent to your office via U.S. mail on December 13, 2013, and December 30, 2013. However, the Department's EIR consultant has determined that some of the records specifically identified in your December 24, 2013 request may not have been included in those prior disks. As a result, a new disk containing all of the Draft EIR's reference materials, including those specifically identified in your request, is being compiled and will be sent to you no later than January 10, 2014. The additional time is necessary due to the recent holidays and vacation schedules of the consultant's personnel.

In the meantime, please do not hesitate to contact me with any questions or concerns.

Very truly yours,

RITA L. NEAL
County Counsel

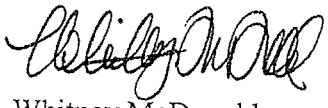

By: Whitney McDonald
Deputy County Counsel

WM:nw
cc: Ramona Hedges
Murry Wilson
133275
4470nwltr.docx

Attachment 2

Phillips 66 Delivers on Advantaged Crude Strategy

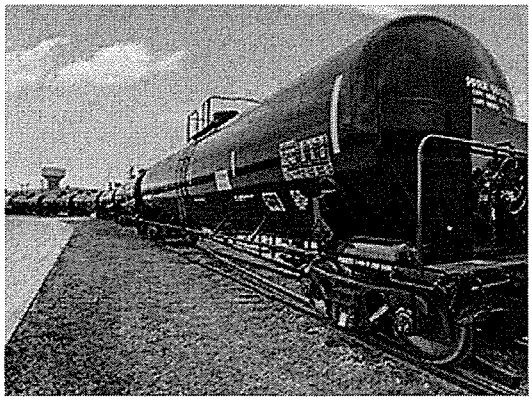

Phillips 66 is steadily making a number of commitments to transportation infrastructure to deliver advantaged, or lower cost, crude oil to its U.S. refineries, resulting in significant cost savings and increased profitability for the company.

The company's biggest operating cost by far is the purchase of approximately 2 million barrels of crude oil per day (BPD), or 730 million barrels per year -- enough oil to fill Reliant Stadium in Houston 29 times. With crude oil prices fluctuating between $90 and $120 per barrel, that equates to more than $80 billion a year for crude oil purchases.

"Crude oil and energy consumption account for approximately 70 percent of our refining business' cost structure," said Chairman and Chief Executive Officer Greg Garland. "The single biggest lever we have to improve value in our refining business is through lowering our feedstock costs. A savings of $1 per barrel across our refining system is worth about $450 million of net income to us."

- **Recent Advantaged Crude Activities**
- **Advantaged Crude by the Numbers**
- **Delivery Taken on First Railcars**

"The single biggest lever we have to improve value in our refining business is through lowering our feedstock costs. A savings of $1 per barrel across our refining system is worth about $450 million of net income to us."

Advantaged crude oil sells at a discount relative to crude oils tied to the global benchmark, North Sea Brent crude. For Phillips 66, advantaged crude oil includes heavy crude oil from Canada and Latin America, lighter Canadian grades, and West Texas Intermediate (WTI). Increasingly, it also includes shale crude oil from places like the Bakken in North Dakota and the Eagle Ford in Texas. The price for U.S. shale crude is typically tied to the WTI domestic benchmark which has recently been trading $20 less per barrel than Brent crude.

"Running more advantaged crude oil in our refineries allows us to run less of the more expensive globally priced crude oils," said Garland. "This is a key element of the company's strategy for enhancing returns on capital and we think we can drive 2 to 3 percent improvement on our return on capital employed for our Refining business by incorporating more advantaged crude oil into our supply."

In the fourth quarter of 2012, 67 percent, or about 1 million BPD, of Phillips 66's U.S. refining crude slate was considered advantaged crude oil – most of it WTI and heavy crude from Canada and Latin America, along with about 135,000 BPD of shale oil. By 2017, the company expects to be processing 500,000 BPD of new or increasingly advantaged crude oils.

The challenge for refiners like Phillips 66 is getting the advantaged crude oil to the refineries that are equipped to process it. While vast resources of advantaged crude oil are being produced in Canada and in the United States, there is not enough pipeline capacity in the right locations to carry the oil to where it's needed.

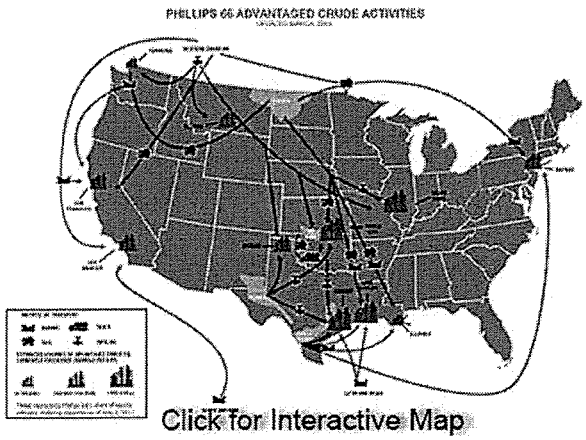

A number of pipeline projects that are planned or already under way could significantly increase the volumes of advantaged crude oil available to refineries in the Midcontinent and Gulf Coast regions, such as the proposed Keystone XL pipeline, the Seaway pipeline reversal and expansion, the Ho-Ho pipeline reversal and others. In the meantime, Phillips 66 is seeking alternative means to transport advantaged crude oil to its refineries.

"We are looking at pipe, rail, truck, barge and ship – just about any way we can get advantaged crude to the front end of the refineries," said Garland.

Phillips 66 has established a cross-functional team from its Business Development, Commercial, Refining and Transportation businesses to develop strategies for accessing and moving advantaged crude oil into its refineries. This team has moved quickly to complete a number of logistics and supply agreements with third parties over the past 12 months as well as identified opportunities to grow existing wholly owned transportation assets that supply the refineries.

"Until new pipeline projects come online, rail is in many cases the easiest and most cost efficient way to get advantaged crude to some of our refineries"

"Until new pipeline projects come online, rail is in many cases the easiest and most cost efficient way to get advantaged crude to some of our refineries," said Jay Clements, manager, Business Development, and leader of the advantaged crude strategy team. "New rail projects can be built much faster than pipelines, allowing quicker access to the new and growing shale plays. However, our refineries are not currently set up to take delivery of large volumes of crude oil from trains, so we're looking at building rail offloading facilities at several refineries including the Bayway Refinery in Linden, N.J., and the Ferndale, Wash., refinery."

Phillips 66 has secured access to a third-party rail loading facility in North Dakota and the company has received the first batch of railcars from the 2,000 ordered in 2012. These railcars initially will be used to deliver Bakken crude oil west to the Ferndale Refinery and east to the Bayway Refinery.

The company is already processing 75,000 BPD of Bakken crude oil at Bayway and is processing smaller volumes of Bakken crude at Ferndale, with plans to significantly grow those volumes as the new rail car fleet is delivered. The oil is being delivered through third-party rail facilities and then by barge to the refineries. A proposed new rail offloading facility planned for Bayway would enable the delivery of 70,000 barrels per day of Bakken crude directly into the refinery. Smaller volumes of Bakken crude also are being delivered to the company's Midcontinent refineries via existing pipeline systems and to its Gulf Coast refineries through a combination of rail, pipelines and barges.

"Our U.S. refining network occupies the broadest geographic footprint within our peer group which we think gives us a competitive advantage. It's a great platform for capturing advantaged feedstock"

The Ponca City Refinery in Oklahoma is situated on top of the Mississippian Lime formation and the company has signed an agreement with a third-party pipeline operator to supply the refinery with approximately 20,000 BPD of crude oil from this local source. In addition, the company is enhancing its own transportation facilities that will enable delivery of another 40,000 BPD of Mississippian Lime crude oil to Ponca City by mid-2014.

The Sweeny Refinery in Texas is in close proximity to the Eagle Ford shale and another recent pipeline agreement will supply up to 30,000 BPD of Eagle Ford crude oil to that refinery beginning in 2014. Eagle Ford crude oil also is being delivered to Phillips 66's Gulf Coast refineries and to the Bayway Refinery via barges and tankers. The company recently signed time charter agreements for two medium-range U.S.-flagged tankers that supply Eagle Ford crude oil to the

Bayway Refinery, the Alliance Refinery in Louisiana and potentially the company's other Gulf Coast refineries.

While many of Phillips 66's U.S. refineries are already processing some advantaged crudes, the company is making small modifications to several refineries, including the Lake Charles Refinery in Louisiana and the Ponca City, Sweeny, Alliance and Wood River refineries that will enable those facilities to process even more advantaged crude oil. The next challenge for the company is identifying strategies to get more advantaged crude oil to its California refineries.

"The California refineries are capable of running a wide range of crude oils which creates opportunities throughout North America to supply California if we can find a cost effective mode of transportation," says Clements.

Garland believes the geographic diversity of the company's U.S. refining network, especially the company's significant presence in the Midcontinent and Gulf Coast regions, is a major strength and positions the company to be able to benefit from advantaged crude sources for years to come.

"Our U.S. refining network occupies the broadest geographic footprint within our peer group which we think gives us a competitive advantage. It's a great platform for capturing advantaged feedstock," said Garland. "Over the next several years, we are expecting 2 to 3 million barrels a day of light, sweet crude coming out of new U.S. shale plays and ultimately there will be 2 to 3 million barrels a day of Canadian heavy crude oil that comes south. We're going to make investments in infrastructure and aggressively pursue every angle we can to ensure we can bring as much advantaged crude as possible to our refineries."

CAUTIONARY STATEMENT FOR THE PURPOSES OF THE "SAFE HARBOR" PROVISIONS OF THE PRIVATE SECURITIES LITIGATION REFORM ACT OF 1995

This story contains certain forward-looking statements within the meaning of Section 27A of the Securities Act of 1933, as amended, and Section 21E of the Securities Exchange Act of 1934, as amended, which are intended to be covered by the safe harbors created thereby. Words and phrases such as "is anticipated," "is estimated," "is expected," "is planned," "is scheduled," "is targeted," "believes," "intends," "objectives," "projects," "strategies" and similar expressions are used to identify such forward-looking statements. However, the absence of these words does not mean that a statement is not forward-looking. Forward-looking statements relating to Phillips 66's operations (including joint venture operations) are based on management's expectations, estimates and projections about the company, its interests and the energy industry in general on the date this story was prepared. These statements are not guarantees of future performance and involve certain risks, uncertainties and assumptions that are difficult to predict. Therefore, actual outcomes and results may differ materially from what is expressed or forecast in such forward-looking statements. Factors that could cause actual results or

materially from what is expressed or forecast in such forward-looking statements. Factors that could cause actual results or events to differ materially from those described in the forward-looking statements include fluctuations in crude oil, NGL, and natural gas prices, refining and marketing margins and margins for our chemicals business; unexpected changes in costs for constructing, modifying or operating our facilities; unexpected difficulties in manufacturing, refining or transporting our products; lack of, or disruptions in, adequate and reliable transportation for our crude oil, natural gas, NGL, and refined products; potential liability for remedial actions, including removal and reclamation obligations, under environmental regulations; potential liability resulting from litigation; limited access to capital or significantly higher cost of capital related to illiquidity or uncertainty in the domestic or international financial markets; and other economic, business, competitive and/or regulatory factors affecting Phillips 66's businesses generally as set forth in our filings with the Securities and Exchange Commission, including our filings with the Securities and Exchange Commission. Phillips 66 is under no obligation (and expressly disclaims any such obligation) to update or alter its forward-looking statements, whether as a result of new information, future events or otherwise.

© Phillips 66 Company. All rights reserved. Legal, Privacy, Cookies and Security Notices. California Transparency in Supply Chains Disclosure.

Attachment 3

Phillips 66
Rodeo Refinery
Rodeo, California

Rodeo Propane Recovery Project

Land Use Permit Application

June 2012

TABLE OF CONTENTS

1.0	*INTRODUCTION*		*1*
2.0	*RODEO REFINERY BACKGROUND*		*3*
	2.1	*EXISTING REFINERY PROCESSES AND FACILITIES*	*4*
	2.1.1	*Marine Terminal Complex*	*4*
	2.1.2	*Crude Unit*	*5*
	2.1.3	*Crude/Coking Unit*	*5*
	2.1.4	*Unicracker Complex*	*5*
	2.1.5	*ULSD Hydrotreating Unit*	*6*
	2.1.6	*Isomerization Unit*	*6*
	2.1.7	*Hydrotreating-Reformer Complex*	*6*
	2.1.8	*Product Blending*	*7*
	2.1.9	*Steam/Power Plant*	*7*
	2.1.10	*Sulfur Recovery Plant, Amine Absorbers and Sour Water Strippers*	*7*
	2.1.11	*Fuel Gas Center*	*8*
	2.1.12	*Butane Storage and Loading*	*9*
	2.1.13	*Other Facilities and Operations*	*9*
	2.2	*RECENT ENVIRONMENTALLY SIGNIFICANT CHANGES AT THE RODEO REFINERY*	*9*
3.0	*DESCRIPTION OF PROPOSED PROJECT*		*11*
	3.1	*NEW AND MODIFIED FACILITIES AND EQUIPMENT*	*11*
	3.1.1	*Propane Recovery from Refinery Fuel Gas*	*12*
	3.1.2	*Refinery Fuel Gas Hydrotreating*	*12*
	3.1.3	*Propane Storage and Treatment*	*12*
	3.1.4	*Truck Loading*	*13*
	3.1.5	*Railcar Loading Modification*	*13*
	3.1.6	*Associated Auxiliary Equipment Additions or Changes*	*13*
	3.2	*PROJECT IMPACT ON RODEO REFINERY OPERATIONS*	*13*
	3.2.1	*Air Emissions Impacts*	*13*
	3.2.2	*Utilities Usage*	*14*
	3.2.3	*Operations Workforce*	*14*

3.3 PROJECT CONSTRUCTION INFORMATION *14*
3.3.1 Site Preparation *14*
3.3.2 Construction Labor Force *15*
3.3.3 Construction Materials and Services *15*
3.3.4 Construction Traffic *15*

4.0 ENVIRONMENTAL CHECKLIST *16*

LIST OF FIGURES

FIGURE 1 Site Location Map

FIGURE 2 Aerial of Facility

FIGURE 3 Topography of Facility

FIGURE 4 Locations of Site Modifications

FIGURE 5 Overall Block Flow Diagram of Refinery

FIGURE 6 Existing Refinery Fuel Gas System Block Flow Diagram

FIGURE 7 Proposed Refinery Fuel Gas System Block Flow Diagram

FIGURE 8 Location of Special Flood Areas

LIST OF APPENDICES

APPENDIX A - Contra Costa County Land Use Permit Application Forms

1.0 *INTRODUCTION*

The purpose of this document is to provide information to the Contra Costa County Community Development Department in support of the Propane Recovery Project proposed by Phillips 66 Company ("Phillips 66") at its Rodeo Refinery in Rodeo, California. Phillips 66 is seeking approval of a land use permit for the project. The objective is to modify existing facilities and add limited new facilities to recover propane from refinery fuel gas and other process streams and ship it by rail and truck for sale. The project will involve hydrotreating a portion of the refinery fuel gas which will result in a reduction in the amount of sulfur in the fuel gas, and ultimately, SO_2 emissions to atmosphere from the refinery. Approval of the Land Use Permit requires compliance with the California Environmental Quality Act (CEQA).

Most refineries recover liquid propane and butane for product sales. At the Rodeo refinery, only a portion of the butane is recovered and shipped by rail for sale. In the summer, up to 9,000 barrels per day are shipped by rail. The remaining propane and butane are used as fuel in the refinery fuel gas system. The propane and butane removed from the refinery fuel gas will be replaced with additional purchases of PG&E natural gas to provide the heat input for the refinery processes. The proposed project mainly involves the installation of new processing equipment in existing refinery process units and additional propane storage and loading facilities.

The project will be constructed on existing refinery property that is zoned as heavy industrial use, and the project is a permitted use within the heavy industrial zone. However, a land use permit is required under §84-63.1002 of the Contra Costa County Code.

The Phillips 66 Rodeo Refinery is a modern refining facility that currently processes a range of raw materials into clean burning gasoline, ultra-low sulfur diesel, and related by-products for California and other markets. This proposal is a discretionary project that is not mandated by government regulation.

CEQA requires that potential environmental impacts of proposed projects be evaluated, and that feasible methods to reduce, avoid, or eliminate identified significant adverse impacts of these projects be included as part

of the project. Under CEQA, the lead agency is defined as "the public agency that has the principle responsibility for carrying out or approving a project that may have a significant effect upon the environment" (Public Resources Code § 21067). Contra Costa County has primary approval authority over the proposed project, and therefore is the appropriate lead agency pursuant to CEQA guidelines.

This document describes the project and provides supporting information for the CEQA process. The document is organized as follows:

- Section 2.0 (Rodeo Refinery Background) describes the refinery's current operations and facilities;
- Section 3.0 (Proposed Project) presents the various elements of the project and how the new and modified equipment and facilities would affect the refinery's operations, project construction activities, and the normal operating scenario; and
- Section 4.0 (Environmental Checklist) addresses each of the environmental issue areas as identified in Appendix G of the CEQA Guidelines.

In preparing this application, Phillips 66 has drawn heavily on the Environmental Impact Reports (EIR) issued by Contra Costa County for the Refinery's 2007 Clean Fuels Expansion Project (CFEP)[1] and 2003 Ultra Low Sulfur Diesel (ULSD) Project[2]. These EIRs included extensive baseline studies of environmental conditions at and near the refinery and descriptions of refinery facilities and operations. Much of these baseline data are still accurate as of June 2012. As is allowed under CEQA, Phillips 66 incorporates by reference much of the baseline descriptions of the existing environment and the refinery facilities and operations from these previous EIRs.

---

[1] ConocoPhillips Rodeo Refinery, Clean Fuels Expansion Project, Environmental Impact Report, November 2006.

[2] ConocoPhillips, Ultra Low Sulfur Diesel/Strategic Modernization Project, Environmental Impact Report, May 2003.

2.0 *RODEO REFINERY BACKGROUND*

The Phillips 66 Rodeo Refinery is located in unincorporated Contra Costa County, near the town of Rodeo, as shown on Figure 1. The refinery encompasses a total of 1,100 acres of land, consisting of the 495-acre active area of the refinery, where all its facilities and equipment are located, and another 600 acres of undeveloped areas. It is bordered by the Nustar Terminal to the north, and an undeveloped area to the east. To the south, beyond a 300- to 600-foot undeveloped area (property maintained as buffer areas between the active or developed portion of the refinery and adjacent land uses), is the Bayo Vista residential area. San Pablo Bay borders the refinery to the west.

Interstate Highway 80 (I-80) and San Pablo Avenue run north-south through the refinery's property. The property is zoned Heavy Industrial. Land uses to the northeast of the refinery are a combination of industrial and open space. To the east is primarily open space, and a combination of residential, light commercial, and light industrial uses are found to the south and southwest. As stated above, the Nustar Terminal (a fuel distribution terminal) lies to the north and San Pablo Bay to the west. The nearest sensitive receptor is a day-care facility in the Bayo Vista residential area, near the southern property boundary, south of the undeveloped buffer zone.

Figure 2 and 3 shows an aerial and topography of the existing Phillips 66 Rodeo Refinery. The refinery consists of refining processes and support units that produce fuels, sulfur, and petroleum coke. The refinery's principal activity is fuels manufacturing, wherein the facility converts crude oil and other feedstock into gasoline, jet fuel, diesel, and industrial fuels. The proposed project will occur at several locations within the 495-acre developed active area of the refinery (see Figure 4).

The Rodeo Refinery is designed and operated to refine a variety of domestic and foreign crude oils, such as heavy crudes from Central California and Canada as well as medium crude oils, such as Alaskan North Slope and Escalante. The crude oil is made into usable products such as gasoline, jet fuel, diesel fuel, sulfur, and petroleum coke. Electrical power, fuel gas, and steam are also created during the refining process. Crude oil is brought to the refinery via pipeline and marine tanker.

Tankers dock at the refinery's Marine Terminal, located at the northwestern edge of the facility.

Numerous chemicals, materials, and utilities are required to produce useful products from the crude oil. Some chemicals, such as hydrogen, are produced at Rodeo Refinery or supplied by Air Liquide, which operates a Hydrogen Production Plant adjacent to the Refinery. Other feedstock, chemicals, and materials are purchased and transported to the facility. The refinery generates its own steam, fuel gas, and electricity, and purchases other resources, such as natural gas and water.

Pacific Gas and Electric Company (PG&E) supplies natural gas and electricity to the Rodeo Refinery. The East Bay Municipal Utilities District (EBMUD) supplies water.

Figure 5 is an overall block flow diagram showing the Refinery's existing production processes. Crude oil is sent to distillation units to make the first separation of crude oil into its various components. Additional processing takes place in a number of refinery units including coking, isomerization, hydrocracking, reforming, and blending units. The following discussion describes Rodeo Refinery's existing processes.

2.1 *EXISTING REFINERY PROCESSES AND FACILITIES*

2.1.1 *Marine Terminal Complex*

Ocean tanker ships deliver crude oil, blending stocks, and intermediate feedstock to the Refinery's Marine Terminal Complex. The Marine Terminal is equipped with equipment such as pumps, pipelines, heavy cargo hoses, and a thermal oxidizer for vapor recovery/control. The ship's cargo is unloaded via the pipelines and cargo hoses into various storage tanks on shore. Heavy crude and semi-refined petroleum also reach Rodeo Refinery by pipelines. Product ships leave the Marine Terminal loaded with intermediate and refined products for other coastal cities and distribution terminals. Product pipelines also distribute gasoline, diesel, and jet fuel to terminals; from these terminals, products are delivered by truck to service stations and other Phillips 66 customers.

2.1.2 *Crude Unit*

The Crude Distillation Unit 267 heats crude oil until it partially vaporizes and separates it by distillation into various fractions that serve as feedstock for subsequent processing units. The products from the crude unit are light naphtha (a gasoline intermediate), medium naphtha, diesel fractions, and a thick residual material. The Gasoline Fractionation Unit (Unit 215) distills the light naphtha fraction from Unit 267. Propane, butane and lighter gases are recovered for treatment at the fuel gas center.

The gasoline fractions are further processed into gasoline-blending stocks at other units at the refinery. The existing light and heavy diesel streams from Unit 267 are combined at the unit and sent to storage before processing in the ULSD Hydrotreating Unit (Unit 250).

2.1.3 *Crude/Coking Unit*

Heavy crude oil and semi-refined crude oil are distilled in the crude distillation section of the Crude/Coking Unit (Unit 200) to produce cracked naphtha, sour diesel, gas oils, and bottoms. The coking process converts heavy residual oils into gasoline, diesel, and other fuels. The heavy residuals are exposed to high temperatures in coke drums where thermal cracking occurs (i.e., using high temperatures to break hydrocarbon molecules). These high temperatures cause the residuals to decompose and form distillates, fuel gas, and petroleum coke. Petroleum coke is either sold or transported off site for further processing. Naphtha, sour diesel, and gas oils are further processed at other refinery units. The gases produced flow to Unit 233, the Fuel Gas Center, as shown in Figure 6, for removal of hydrogen sulfide (H_2S).

2.1.4 *Unicracker Complex*

The Unicracker Complex processes gas oils into gasoline, diesel, and jet fuel. The refinery processes that make up the Unicracker Complex include the Unicracker and Hydrogen Plant (Unit 240), Heavy Gas Oil Hydrocracker (Unit 246), Catalytic Reformer (Unit 244), and Unisar Hydrotreating Unit (Unit 248).

The Unicracker and Unit 246 apply a hydrocracking process to convert gas oils into gasoline and jet fuel distillate stocks. Mixed butanes are also produced. This is accomplished by breaking apart or cracking large

molecules into smaller molecules using a combination of catalysts, high pressures, high temperatures and adding hydrogen.

The catalytic reformer can increase the octane rating of the naphtha feed by up to 30 octane points. The Unisar refines the burning characteristics of jet fuel distillate stock produced by the Unicracker to reduce exhaust smoke.

2.1.5 *ULSD Hydrotreating Unit*

The ULSD Hydrotreating Unit (Unit 250) is a diesel hydrotreater designed to process diesel produced in the Crude Distillation and Crude/Coking Units (Unit 267 and Unit 200). This unit produces a diesel-blending product containing 5 parts per million, by weight (ppmw) sulfur and includes blending facilities to produce finished diesel product that meets ULSD specifications.

The ULSD Hydrotreater produces other products, including naphtha, which is processed in the Naphtha Hydrotreater (Unit 230), and light gases, which are sent to the Fuel Gas Center (Unit 233).

2.1.6 *Isomerization Unit*

The Isomerization Unit (Unit 228) rearranges straight-chain hydrocarbon molecules into branched-chain molecules by applying heat, hydrogen, and precious metal catalysts. This rearrangement increases the octane rating of the intermediate streams. The isomerized product from this unit is a key reformulated gasoline blending stock that is low in benzene and relatively high in octane. In addition, butane is produced.

2.1.7 *Hydrotreating-Reformer Complex*

The Naphtha Hydrotreaters (Units 229 and 230) remove sulfur and nitrogen contaminants from the light and medium range gasoline feed streams produced by the Crude/Coker (Unit 200) and the Crude Distillation Unit (Unit 267). The treated light range gasoline can be processed by the Isomerization Unit or blended directly into gasoline. The medium-range gasoline is further processed in the Reformer (Unit 231) to produce a high octane gasoline blend stock. During this catalytic reforming process, hydrogen is released and returned to the Hydrotreaters. Butane is also produced at this unit. The gases produced flow to Unit 233, the Fuel Gas Center, for removal of H_2S.

2.1.8 *Product Blending*

Product Blending mixes blending stocks and additives to meet consumer product specifications for unleaded gasoline and diesel. The blender is a computer-controlled pumping facility that controls the rate at which each blend stock is pumped into the final blend. The blend is monitored during the blending operation by on-line analyzers, and samples of the resulting blend are analyzed in the laboratory. The final blend is stored in "finished" product storage tanks before being transported off site.

2.1.9 *Steam/Power Plant*

The refinery's steam/power plant is a cogeneration facility. The plant uses three simple-cycle gas turbines to generate electricity, and uses gas turbine waste heat to generate steam. Supplemental natural gas combustion in the three Heat Recovery Steam Generators (HRSG) provides additional high and low pressure steam. The plant has an electricity production capacity of approximately 50 megawatts.

2.1.10 *Sulfur Recovery Plant, Amine Absorbers and Sour Water Strippers*

The sulfur recovery plant (Units 235, 236, and 238) processes hydrogen sulfide and ammonia, which are removed from refinery process streams by the amine absorbers and sour water strippers. The amine absorbers remove H_2S from sour gas and refinery fuel gas. Sour water strippers remove hydrogen sulfide and ammonia from process water streams. The sulfur plants use the Claus Sulfur Recovery process and each has its own Tail Gas Treatment Unit (TGTU), which converts over 99 percent of the hydrogen sulfide to liquid sulfur for export off-site. The ammonia present in the gases is converted to nitrogen.

Claus Sulfur Recovery

In a Claus sulfur recovery unit, sulfur is recovered from acid gases (containing H_2S) by first combusting nominally one-third of the H_2S with oxygen to form sulfur dioxide (SO_2). This takes place in a high temperature reaction furnace. Next, the SO_2 reacts with H_2S to form elemental sulfur and water via the Claus reaction. Ammonia and hydrocarbons are also combusted to nitrogen, carbon dioxide and water in the reaction furnace.

Elemental sulfur product condenses and is removed from process gas in the Sulfur Condenser. Process gas exiting the Sulfur Condenser is reheated and then passed through an activated alumina catalyst reactor to continue the Claus reaction at lower temperatures. Reactor outlet gas is cooled to condense additional sulfur, and then is reheated and reacted in subsequent converter beds.

Tail Gas Treatment Unit

In the TGTU, tail gas from the Claus plant is heated, mixed with hydrogen and passed over a special hydrogenation catalyst. Elemental sulfur and SO_2 react with hydrogen to form H_2S and water. Carbonyl sulfide and carbon disulfide, byproducts formed in the Claus thermal section, react with water to form H_2S and CO_2.

The refinery uses the Stretford process to process the H_2S in the tail gas in Units 236 and 238. The newest sulfur recovery unit, Unit 235, uses an amine, MDEA solution, to remove the H_2S.

2.1.11 *Fuel Gas Center*

The Fuel Gas Center includes two units, Unit 233 and a U-240 gas treatment system (for the Unit 240 Unicracker and associated downstream processes) that removes H_2S and other sulfur compounds from process make gas prior to its use as Refinery Fuel Gas in heaters, boilers and gas turbines. Refinery sour make gases flow through common collection headers to Unit 233 and the U-240 fuel gas treatment system, where an amine solution (DGA) is used to remove H_2S and other sulfur compounds. Butane can be added to the Refinery Fuel Gas to increase the heat content. When the refinery produced fuel gases are insufficient to meet refinery heater firing demands, natural gas from PG&E is automatically added on pressure control.

A portion of the treated Refinery Fuel Gas from Unit 233 is routed to the Merichem Unit for further sulfur removal. The Merichem Unit uses a caustic treating process to remove additional sulfur compounds from the Refinery Fuel Gas. The treated Refinery Fuel Gas from the Merichem Unit is used as fuel at three heaters added as part of the Ultra-Low Sulfur Diesel and Clean Fuels Expansion Projects to meet more strict fuel gas sulfur limits.

Figure 6 is a block flow diagram which shows the current Refinery Fuel Gas system.

2.1.12 *Butane Storage and Loading*

The Butane Storage system consists of four storage spheres, Tk-300, Tk-301, Tk-302 and Tk-833. There are two Butane Loading Racks located at the Marine Terminal Complex. During the summer months, iso-butane and n-butane are loaded into rail cars. During the winter blending season, butane can be offloaded from railcars for blending.

Currently, up to 16 rail cars per day of butane can be loaded. In the summer, 8 to 12 rail cars (up to 9,000 barrels) of butane are typically loaded on any given day. Butane is typically loaded between 50 and 60 rail cars per week in the summer. In the winter, 3 to 4 rail cars (2,300 to 3,000 bbl) are loaded per month.

2.1.13 *Other Facilities and Operations*

In addition to the above units, Rodeo Refinery operates and maintains a wastewater treatment plant (Unit 100), a vapor recovery system, a flare system, a petroleum transport system and a laboratory. The wastewater treatment plant processes wastewater prior to discharge. In addition to receiving hydrogen from Air Liquide, the refinery has an existing hydrogen plant (Unit 110) that provides hydrogen to the Isomerization Unit, the Unicracker complex, and the ULSD Hydrotreater.

2.2 *RECENT ENVIRONMENTALLY SIGNIFICANT CHANGES AT THE RODEO REFINERY*

The Rodeo Refinery has undergone a number of changes over the last 16 years that are relevant to its impacts on the environment, and thus also are relevant to understanding the environmental implications of the proposed project. These various changes have reduced the refinery's potential for impacts on the surrounding natural and human environment. The changes include:

- In 1996, Rodeo Refinery completed the Reformulated Gasoline Project, which allowed it to produce gasoline that met more stringent environmental regulatory requirements.

- In 1997, Rodeo Refinery undertook initiatives that exceeded government-mandated clean fuels specifications to reduce the additive methyl-tert-butyl ether (MTBE) in gasoline, eliminating MTBE use by the end of 2000. (Rodeo Refinery currently uses ethanol as an oxygenating compound.) The refinery's initiative also reduced the sulfur content in diesel.
- In July 1998, Rodeo Refinery brought on line a major water treatment project that removes 95 percent of the selenium from the water it processes.
- In 1998, the Cummings Skyway was completed north of the facility, allowing Rodeo Refinery traffic to largely avoid the community of Rodeo.
- In 1999, Rodeo Refinery implemented a nitrogen oxide (NOx) emission reduction program. In compliance with Bay Area Air Quality Management District (BAAQMD) Regulation 9, Rule 10 (effective July 2002), subject heaters were modified with ultra-low NOx burners, or ultra low NOx burners and selective catalytic reduction equipment, significantly reducing NOx emissions.
- In December 2001, Rodeo Refinery discontinued importing anhydrous ammonia for its selective catalytic reduction (air pollution control) systems, instead using a dilute aqueous ammonia solution to reduce potential hazards concerns in the surrounding community.
- In early 2005, Rodeo Refinery completed the ULSD project, which allows the refinery to produce ultra-low sulfur diesel, more efficiently use a broader array of crude oil as feedstock, and increase refinery efficiency and crude throughput capacity.
- In 2009, Rodeo Refinery completed the CFEP, which added a new heavy gas oil hydrocracker process unit (Unit 246), new sulfur recovery unit (Unit 235) and a third party Hydrogen Plant owned and operated by Air Liquide.

Phillips 66 is committed to implementing efficient design and state-of-the-art environmental controls on its proposed new facilities, and continuing the refinery's record of environmental improvement throughout its ongoing operations.

3.0 *DESCRIPTION OF PROPOSED PROJECT*

The primary objective of this project is to recover propane from refinery fuel gas (RFG) and other process streams. The propane recovery process will also result in an increase in the volume of butane that is currently recovered by the refinery. A decrease in sulfur dioxide (SO_2) emissions from refinery combustion sources will result from the removal of sulfur compounds from RFG as part of the process to recover propane.

Most refineries recover liquid propane and butane for product sales. At the Rodeo refinery, only a portion of the butane (up to 9,000 barrels per day in the summer) is recovered and shipped by rail for sale. The remaining propane and butane are used as fuel in the refinery fuel gas system. The propane and butane removed from the refinery fuel gas will be replaced with additional purchases of PG&E natural gas to provide the necessary heat input for refinery processes. The proposed project mainly involves the installation of new processing equipment in existing refinery process units and additional propane storage and loading facilities.

Construction is scheduled to begin when all required permits are received. Startup would occur after the completion of construction, which is estimated to take 12 to 15 months.

3.1 *NEW AND MODIFIED FACILITIES AND EQUIPMENT*

The proposed project involves adding new processing and ancillary equipment at existing process units at the Phillips 66 Rodeo Refinery. It comprises four primary upgrade elements and modifications to associated ancillary facilities, including:

- Propane and Butane Separation from Refinery Fuel Gas: New fractionation columns are required to separate ethane and lighter compounds from propane and butane. Heat would be provided by steam and would involve the addition of a new steam boiler rated at approximately 250 MMBtu/hr.
- Refinery Fuel Gas Hydrotreating: Hydrotreating a portion of the process streams would result in a decrease of sulfur compounds in refinery fuel gas.

- Propane Storage and Treatment: Addition of propane storage vessels and treatment facilities.
- Propane Truck Loading Rack: A truck loading rack for propane loading.
- Railcar Loading Modification: Modification to existing railcar operations to include propane loading.
- Additions and modifications to ancillary facilities such as pumps, heat exchangers, instrumentation, utilities and piping.

These additions and modifications would be located at several locations within the developed, active 495-acre area of Rodeo Refinery (See Figure 4).

3.1.1 *Propane Recovery from Refinery Fuel Gas*

A number of process vessels and equipment would be added to remove propane and improve butane removal from the existing refinery fuel gas stream. The fractionation facilities would primarily be added at existing Process Unit 240. The process would require a small increase in energy consumption. Heat required by the process would be provided by steam from a new steam boiler. Figure 7 is the proposed Propane Recovery Project Refinery Fuel Gas system block flow diagram.

The project would be designed to recover approximately 4,200 barrels per day (bpd) of propane and an additional 2,200 to 2,800 bpd of butane.

3.1.2 *Refinery Fuel Gas Hydrotreating*

Certain streams which contain high sulfur would need to be hydrotreated prior to the propane recovery processes (see Figure 7). Removal of the sulfur compounds from these streams would significantly lower the average sulfur content of the refinery fuel gas burned in refinery combustion sources.

3.1.3 *Propane Storage and Treatment*

Approximately ten pressure tanks designed for storage of liquefied petroleum gases would be added. The horizontal storage vessels would each contain approximately 1,400 bbl of propane.

To meet product specifications, facilities would be added to remove any remaining impurities in the propane prior to rail loading for delivery.

3.1.4 *Truck Loading*

A truck loading rack would be added to allow propane loading. The rack would be designed to load up to 10 trucks per day (about 2,000 barrels).

3.1.5 *Railcar Loading Modification*

The refinery has the capacity to load butane into up to 16 rail cars per day. This project would add propane loading and increase the overall amount of butane loaded. The additional volume of propane loaded would be approximately 6 cars per day (up to 4,000 barrels per day). Approximately 6 additional cars per day of butane (up to 4,000 barrels per day) would be loaded for a total of 20 to 24 cars per day of propane and butane.

An additional rail spur would be added for the storage of the additional rail cars due to the increase in rail activity. Another loading rack may also be added.

3.1.6 *Associated Auxiliary Equipment Additions or Changes*

Additional piping would be needed outside the battery limits of the various process units. This additional piping consists of new lines or tie-ins to existing lines outside of the battery limit of the process units. These include new rundown lines needed to send products to storage and interconnecting lines between process units. Relief lines or blowdown tie-ins outside of the process units also are needed to bring individual plant relief loads to the existing relief system.

3.2 *PROJECT IMPACT ON RODEO REFINERY OPERATIONS*

The following sections provide information on the normal operation of the facility after tie-in and startup.

3.2.1 *Air Emissions Impacts*

Air emissions associated with this project would be limited to minor increases in fugitive emissions, combustion emissions from a new boiler, if required, and emissions associated with rail car locomotives. These

impacts are expected to be minimal and in compliance with all BAAQMD regulations and requirements.

3.2.2 *Utilities Usage*

The proposed project would change Rodeo Refinery's utility usage as follows:

- Natural gas consumption would increase to replace the propane and additional butane recovered from the Refinery Fuel Gas during those periods when refinery fuel gas supplies are inadequate. The additional gas would be purchased from PG&E.
- Fresh water consumption from EBMUD would not significantly increase.
- Additional cooling demands would be met with air cooling to the extent practical to reduce consumption of cooling water. A small cooling tower or use of once-through salt water cooling may also be required.

3.2.3 *Operations Workforce*

There would be no change in the number of employees at Rodeo Refinery as a result of this project. Rodeo Refinery currently has approximately 575 regular and contract employees.

3.3 *PROJECT CONSTRUCTION INFORMATION*

The following sections provide information on the construction phase of the proposed project.

3.3.1 *Site Preparation*

The new Fuel Gas Hydrotreating and Propane Recovery plants would be constructed on existing plot space that currently houses an out of service unit that would be dismantled. The Propane Storage facilities are planned for empty plot space adjacent to Tank 78. There also would be minor demolition activities (e.g., pipe supports, concrete slabs) associated with proposed new interconnecting piping. These activities would be conducted in accordance with established procedures.

Excess soil generated from site preparation activities would be recycled or disposed of on site. Other materials, such as asphalt and concrete, would be transported off site for recycling or disposal at appropriately permitted disposal sites. Hydrocarbon-containing soils would be handled consistent with the refinery's approved Soils Management Plan.

3.3.2 *Construction Labor Force*

The project's construction workforce is expected to reach approximately 400 workers at its peak during 2014. This workforce would include cement finishers, ironworkers, pipe fitters, welders, carpenters, boilermakers, electricians, riggers, painters, operators, and laborers. The entire construction work force would be drawn from the region within an approximately 1-hour commute distance from Rodeo Refinery.

3.3.3 *Construction Materials and Services*

During construction, deliveries would be required of materials such as concrete, structural steel, pipe and fittings, vessels and equipment, electrical equipment, and insulation. Deliveries also would be necessary for additional construction services equipment (e.g., portable toilets, temporary office trailers for construction contractors). Materials would be delivered by truck. It is estimated that up to 20 truck deliveries per day would occur during the peak construction period, which is anticipated to last approximately 12 to 15 months.

3.3.4 *Construction Traffic*

Phillips 66 anticipates a peak of 400 additional two-way trips per day during construction: 380 worker commute trips and 20 truck trips, bringing project equipment and supplies to Rodeo Refinery.

No physical entrance, roadway, or intersection improvements would be needed to accommodate construction traffic volume. Construction traffic would be encouraged to use the Cummings Skyway interchange from I-80 and the north gate(s) of Rodeo Refinery. Phillips 66 constructed the Cummings Skyway interchange several years ago to minimize Rodeo Refinery traffic through the community of Rodeo. It has greatly reduced refinery-related traffic in the community. Use of this access route by project construction-phase traffic would minimize the potential for project impacts on the residents of Rodeo. Project construction workers would park in a number of adjacent and on-site Rodeo Refinery lots.

4.0 *ENVIRONMENTAL CHECKLIST*

Phillips 66 is requesting that the County prepare an Environmental Impact Report (EIR) for this project. To provide supplemental information on the Propane Recovery Project and help the County begin its environmental analysis, this section contains an Initial Study Checklist based on Appendix G of the CEQA Guidelines. [Note that the CEQA checklist is typically used to determine whether an EIR is necessary (instead of negative declaration), but that determination is not needed in this case because Phillips 66 is requesting an EIR].

I. AESTHETICS

Would the project:	Potentially Significant Impact	Less Than Significant With Mitigation Incorporated	Less Than Significant Impact	No Impact
a) Have a substantial adverse effect on a scenic vista?	☐	☐	☒	☐
b) Substantially damage scenic resources, including, but not limited to, trees, rock outcroppings, and historic buildings within a state scenic highway?	☐	☐	☐	☒
c) Substantially degrade the existing visual character or quality of the site and its surroundings?	☐	☐	☒	☐
d) Create a new source of substantial light or glare, which would adversely affect day or nighttime views in the area?	☐	☐	☒	☐

Discussion:

a. Less Than Significant Impact

The proposed facilities would be constructed and operated entirely within the perimeter of the active, developed area of Phillips 66 Rodeo Refinery. Existing refinery facilities would be demolished to make room for new facilities as needed. The site is zoned and planned for heavy industrial use. The proposed facilities would be of a heavy industrial nature and would be very similar in size and appearance to the numerous existing refinery facilities that would surround them. The proposed facilities would therefore be consistent with the existing

visual characteristics of the site. While the site is visible from the surrounding community and from I-80, adding the proposed facilities would not impair a scenic vista nor would they introduce visual elements that would conflict with the existing industrial appearance of the site.

b. No Impact

I-80 is not designated as a state scenic highway in the Rodeo area and the addition of the proposed facilities at the refinery would not be incompatible with the existing visual conditions. The proposed facilities would be added to areas where there are currently refinery facilities and there would be no change in visual conditions. Further, because the sites where the proposed facilities would be located are already developed, the addition of the new facilities would not disturb trees, rock outcroppings, or other natural features with scenic values. In addition, because no historic buildings are present in the area where the proposed facilities would be located (only other refinery facilities), there would be no visual impacts on such non-refinery structures.

c. Less Than Significant Impact

The site has a heavily industrialized appearance and the proposed facilities would be compatible with that appearance. The proposed facilities would not degrade the existing appearance, but would introduce new refinery facilities that would be similar in size and appearance to the existing facilities and those in the surrounding area of the refinery.

d. Less Than Significant Impact

Lighting would be installed on the proposed facilities for safety reasons including nighttime illumination. The new lighting would be similar to the lighting on the facilities that would be demolished. Most of the new equipment would be installed at plots where other equipment was located in the past and equipped with night lighting during its operating life. While there may be more illumination at specific sites, the overall increase in light from the refinery would be negligible and very difficult to perceive from beyond the perimeter of the site.

II. AGRICULTURE RESOURCES

Would the project:	Potentially Significant Impact	Less Than Significant With Mitigation Incorporated	Less Than Significant Impact	No Impact
a) Convert Prime Farmland, Unique Farmland, or Farmland of Statewide Importance (Farmland), as shown on the maps prepared pursuant to the Farmland Mapping and Monitoring Program of the California Resources Agency, to non-agricultural use?	☐	☐	☐	☒
b) Conflict with existing zoning for agricultural use, or a Williamson Act contract?	☐	☐	☐	☒
c) Involve other changes in the existing environment, which, due to their location or nature, could result in conversion of Farmland, to non-agricultural use?	☐	☐	☐	☒

Discussion:

a. No Impact

The proposed facilities would not be located in an area that has been designated as prime farmland. In fact, the land where the proposed facilities would be located has been dedicated to refinery use for many decades.

b. No Impact

The refinery is zoned as heavy industrial and not agricultural. The refinery is not part of a Williamson Act Trust and the development of the proposed facilities would not result in any changes to an existing Williamson Act contract.

c. No Impact

The proposed facilities would be located entirely within the perimeter of the existing refinery. They would not result in the conversion of farmland.

III. *AIR QUALITY*

Would the project:	Potentially Significant Impact	Less Than Significant With Mitigation Incorporated	Less Than Significant Impact	No Impact
a) Conflict with or obstruct implementation of the applicable air quality plan?	☐	☒	☐	☐
b) Violate any air quality standard or contribute to an existing or projected air quality violation?	☐	☒	☐	☐
c) Result in a cumulatively considerable net increase of any criteria pollutant for which the project region is non-attainment under an applicable federal or state ambient air quality standard (including releasing emissions that exceed quantitative thresholds for ozone precursors)?	☐	☒	☐	☐
d) Expose sensitive receptors to substantial pollutant concentrations?	☐	☒	☐	☐
e) Create objectionable odors affecting a substantial number of people?	☐	☐	☒	☐

Discussion:

a. – c. Less Than Significant Impact With Mitigation Incorporated

Contra Costa County is located within the San Francisco Bay Area Air Basin (Basin). Air pollutant emissions from stationary sources are overseen by the BAAQMD. In general, project air quality impacts would be considered significant if the CEQA significance thresholds of the BAAQMD were exceeded.

The BAAQMD website provides information on the attainment status of the air quality within the Basin, with respect to the National Ambient Air Quality Standards (NAAQS) and the California Ambient Air Quality Standards (CAAQS) for nitrogen dioxide (NO_2), sulfur dioxide (SO_2), CO, and lead (NAAQS only)[3]. The Basin is designated non-attainment for 1-hour (CAAQS) and 8-hour ozone (NAAQS and CAAQS). For Particulate Matter (PM_{10}), the Basin is designated non-attainment for

[3] BAAQMD website http://hank.baaqmd.gov/pln/air_quality/ambient_air_quality.htm, last accessed June 19, 2012.

CAAQS. For Fine Particulate Matter ($PM_{2.5}$) the Basin is designated non-attainment for the annual arithmetic mean (CAAQS) and 24-hour standard (NAAQS) and attainment for the NAAQS annual arithmetic mean.

The proposed project will generate air pollutant emissions during both construction and operation. In 2010, the BAAQMD updated its 1999 CEQA Guidelines[4] and significance thresholds. The CEQA Guidelines were again updated in May of 2011[5]. For both construction and operational emissions, these guidelines provided emissions and concentration thresholds for criteria air pollutants, and health risk criteria for toxic air contaminants (TACs). They also included the recommendation to apply best management practices to control construction fugitive PM_{10}/$PM_{2.5}$ emissions. However, the BAAQMD's adoption of significance thresholds for air quality analysis in 2010 and 2011 are the subject of recent judicial actions and, while the thresholds are under review, the BAAQMD has indicated that lead agencies may rely on the 1999 Thresholds of Significance (in response to the judicial actions, BAAQMD has issued a 2012 CEQA Guidelines[6] with the thresholds of significance removed). For the purposes of this proposed project, the thresholds of significance specified in the 1999 and the 2011 documents are considered together.

Construction-Phase Emissions

Construction-related emissions are generally short-term in duration and consist of fugitive and exhaust emissions. Fugitive PM_{10} emissions can result from a variety of construction activities, including excavation, grading, demolition, and vehicle travel on paved and unpaved surfaces. The magnitude of fugitive PM_{10} can vary greatly depending on the level of activity, the specific operations taking place, the equipment being operated, local soils, weather conditions, and other factors.

---

[4] BAAQMD, CEQA Guidelines, Assessing the Air Quality Impacts of Projects and Plans, December 1999

[5] BAAQMD, CEQA Air Quality Guidelines, May 2010 and Updated May 2011.

[6] BAAQMD, CEQA Air Quality Guidelines, Updated May 2012

Besides fugitive PM_{10} emissions, construction activities result in emissions of criteria pollutants and their precursors (e.g. precursor organic compounds) from vehicle and equipment exhaust. Diesel-powered construction equipment and trucks emit diesel particulate matter (PM_{10} and $PM_{2.5}$), which is carcinogenic.

The 1999 BAAQMD CEQA guidelines generally consider construction impacts to be less than significant with the application of mitigation measures specified in the guidelines. These mitigation measures along with additional measures are summarized in the table below and would be implemented for the proposed project.

In addition, the proposed project would obtain a permit with BAAQMD that would impose conditions so that the proposed project would not contribute to exceedances of ambient air quality standards or significantly worsen air quality in cases that a standard is already exceeded. As part of this permitting process and through additional consultation with BAAQMD, other mitigation measures may be implemented, as needed, to reduce construction impacts to less than significant levels.

PROPOSED CONTROL MEASURES FOR CONSTRUCTION EMISSIONS OF PM_{10}

Basic Control Measures (all construction sites)
• Water all active construction areas at least twice daily. • Cover all trucks hauling soil, sand, and other loose materials or require all trucks to maintain at least 2 feet of freeboard. • Pave, apply water three times daily, or apply (non-toxic) soil stabilizers on unpaved access roads, parking areas, & staging areas at construction sites. • Sweep daily (with water sweepers) all paved access roads, parking areas, and staging areas at construction sites. • Sweep streets daily (with water sweepers) if visible soil material is carried onto adjacent public streets.

Enhanced Control Measures (construction sites greater than 4 acres)
• All "Basic" control measures listed above. • Hydroseed or apply (non-toxic) soil stabilizers to inactive construction areas (previously graded areas inactive for ten days or more). • Enclose, cover, water twice daily, or apply (non-toxic) soil binders to exposed stockpiles (dirt, sand, etc.) • Limit traffic speeds on unpaved roads to 15 miles per hour (mph). • Install sandbags or other erosion-control measures to prevent silt runoff to public roadways. • Replant vegetation in disturbed areas as quickly as possible.
Additional Control Measures
• Idling times shall be minimized either by shutting equipment off when not in use or reducing idling time to no more than 5 minutes (as required by the California airborne toxics control measure Title 13, Section 2485 of California Code of Regulations). • All construction equipment shall be maintained and properly tuned in accordance with manufacturer's specifications. All equipment shall be checked by a certified visible emissions evaluator. • All excavation, grading, and/or demolition activities shall be suspended when the average wind speeds exceed 20 mph.

Under the 2011 BAAQMD CEQA guidelines, the construction of proposed projects have specific emission thresholds for criteria air pollutants and health risk criteria to meet for TACs and $PM_{2.5}$ ambient concentrations.

The significance thresholds for construction emissions under the 2011 BAAQMD CEQA Guidelines were 54 pounds per day (annual average of 10 tons per year) for NOx, ROG, and $PM_{2.5}$ (exhaust), and 82 pounds per day (annual average of 15 tons per year) for PM_{10} (exhaust). In addition, the 2011 BAAQMD CEQA Guidelines require best management practices for $PM_{10}/PM_{2.5}$ fugitive dust.

Construction of the proposed project would be expected to have criteria air pollutant emissions below or mitigated below the 2011 BAAQMD

thresholds. As for TACs, the 2011 BAAQMD guidance had previous screening guidance,[7] which if applied to this project, would show acceptable setback distances to the closest offsite receptors such that health risks from TACs and $PM_{2.5}$ concentrations would be less than significant. The project would also apply the best management practices described in the table above to mitigate fugitive dust emissions.

Operation Phase Emissions

The handling of hydrocarbons in the modified facilities may increase the amount of fugitive emissions from valves, flanges, connectors, and pump seals. Combustion products would be emitted from refinery fuel gas burned in the new boiler.

The hydrotreated fuel gas would result in a significant reduction in SO_2 emissions from refinery heaters, boilers and turbines. This reduction would be quantified and used to offset potential SO_2 emissions increases according to Federal and BAAQMD rules.

The project would comply with all applicable federal and BAAQMD air quality rules and regulations. A BAAQMD permit application is currently being prepared that would provide refined emission estimates for the proposed project (preliminary emission estimates are provided in the table below for maximum potential and expected typical operation of the boiler). Additionally, the application would document compliance with all applicable air quality requirements. The permit would impose operating conditions so that the equipment covered by the permit would not result in exceedances of the ambient air quality standards or significantly worsen air quality for pollutants whose standards are already exceeded. For example, emission increases from the project will be minimized by implementing Best Available Control Technology (BACT), where applicable on new and modified emission units.

[7] BAAQMD, Screening Tables for Air Toxics Evaluation During Construction, May 2010

Project Pollutant Emissions (tons per year) – Preliminary Estimates

Source	Pollutant Emissions[1]									
	NOx		SO2		PM_{10}		POC[4]		CO	
	Max	Expected	Max	Expected	Max	Expected	Max	Expected	Max	Expected
New Boiler	9.9	3.4	0.6	0.2	8.2	2.8	5.9	2.0	44	15
Loading Rack/ Locomotive Emissions	See note 3									
Project Emission[2]	9.9	3.4	0.6	0.2	8.2	2.8	5.9	2.0	44	15

[1]NOx and CO based on BACT emission levels (7 ppm for NOx and 50 ppm for CO at 3% O2). All other emissions based on EPA AP-42 for natural gas, wall-fired boiler (> 100 MMBtu/hr) with flue gas recirculation. AP-42 default assumes sulfur content is 0.2 grains/100 scf. Maximum load assumes 250 MMBtu/hr and expected average annual load assumes 85 MMBtu/hr, continuous operation throughout the year.

[2]Emission estimates are preliminary and subject to further updates of emission levels and sources.

[3]Loading rack fugitive emissions are expected to be negligible, due to the liquid gases being under pressure. An incremental increase in freight load on existing locomotive engines, due to additional railcars being added, may lead to a slight increase in emissions.

[4]POC = precursor organic compound, the BAAQMD equivalent to reactive organic gases (ROG). VOC emission from AP-42 used for POC emission estimate

BAAQMD had set operational thresholds of significance in its 1999 and 2011 CEQA guidelines. However, as stated previously, the 2011 CEQA Guidelines are the subject of recent judicial actions and so both guidelines along with other information are being used collectively to assess the level of air quality impacts from the operation of the proposed project. The 1999 BAAQMD CEQA Guidelines specifies that annual emissions exceeding 15 tons per year of ROG, NOx, and PM10 are considered significant. The 2011 guidelines states that ROG, NOx, and $PM_{2.5}$ annual emissions are considered significant above 10 tons per year and PM_{10} annual emissions are considered significant above 15 tons per year.

The project's emission levels are projected to be below both the 1999 and 2011 thresholds. In addition, the project's emission increases will be offset to the extent required under BAAQMD's regulations. Also, consistent with BAAQMD's permit review, the project would comply with all applicable air quality rules and regulations to receive an Authority to Construct permit from BAAQMD.

Therefore, the construction and operation of the proposed project would not conflict with air quality plans or lead to violations of federal or state ambient air quality standards with the implementation of the mitigation measures for construction. With these mitigation measures, the proposed project would also not cause a cumulative net increase in concentration of non-attainment criteria pollutants (ozone, PM_{10}, $PM_{2.5}$).

d. Less Than Significant Impact With Mitigation Incorporated

Sensitive receptors are defined as facilities where sensitive receptor population groups (children, the elderly, the acutely ill and the chronically ill) are likely to be located. These land uses include residences, schools, childcare centers, retirement homes, convalescent homes, hospitals, and medical clinics. The closest sensitive receptor to project railcar transport operations site is a day-care facility in Rodeo approximately 3,900 feet southeast of the railroad tracks. Residences are also present in the same area.

As part of the BAAQMD review process for its Authority to Construct permit, a review of the air toxic compound emissions and potential risk would be required to be evaluated and approved by BAAQMD. Since the project would comply with applicable BAAQMD rules and regulations and would implement the mitigation measures previously

identified for construction emissions, it is not expected that sensitive receptors would be exposed to substantial pollutant concentrations.

e. Less Than Significant Impact

Additional butane and propane would be handled as part of the proposed project. This may involve the use of a small quantity of ethyl mercaptan odorant for propane truck sales. In addition, ammonia may be needed if a selective catalytic oxidizer (SCR) is installed on a new boiler to control NOx. However, these materials are all currently being used on site in appreciable quantities. The nature and level of odorous emissions will not change significantly from that of current refinery operations due to this project. Therefore impacts from odor are anticipated to be less than significant.

IV. *Biological Resources*

Would the project:	Potentially Significant Impact	Less Than Significant With Mitigation Incorporated	Less Than Significant Impact	No Impact
a) Have a substantial adverse effect, either directly or through habitat modifications, on any species identified as a candidate, sensitive, or special status species in local or regional plans, policies, or regulations, or by the California Department of Fish and Game or U.S. Fish and Wildlife Service?	☐	☐	☐	☒
b) Have a substantial adverse effect on any riparian habitat or other sensitive natural community identified in local or regional plans, policies, regulations, or by the California Department of Fish and Game or US Fish and Wildlife Service?	☐	☐	☐	☒
c) Have a substantial adverse effect on federally protected wetlands as defined by Section 404 of the Clean Water Act (including, but not limited to, marsh, vernal pool, coastal, etc.) through direct removal, filling, hydrological interruption, or other means?	☐	☐	☐	☒
d) Interfere substantially with the movement of any native resident or migratory fish or wildlife species or with established native resident or migratory wildlife corridors, or impede the use of native wildlife nursery sites?	☐	☐	☐	☒
e) Conflict with any local policies or ordinances protecting biological resources, such as a tree preservation policy or ordinance?	☐	☐	☐	☒
f) Conflict with the provisions of an adopted Habitat Conservation Plan, Natural Community Conservation Plan, or other approved local, regional, or state habitat conservation plan?	☐	☐	☐	☒

Discussion:

a. No Impact

The proposed facilities are located entirely within the perimeter of the existing refinery. There are no biological resources at the site and the removal of the existing facilities and replacing them with the proposed facilities would not directly affect species that have been identified as

candidate, sensitive, or special status by either the U.S. Fish and Wildlife Service or the California Department of Fish and Game. In addition, because the site of the proposed facilities is already occupied by refinery uses, the proposed facilities would not result in any changes to the habitats of biological resources listed by either of these agencies.

b. No Impact

There are no riparian habitats located in the area where the proposed facilities would be developed. The development of the proposed facilities would not require the removal of any riparian vegetation. Further, development of the proposed facilities would not affect any sensitive natural communities identified in local or regional plans, policies, or regulations.

c. No Impact

There are no wetlands in the area where the proposed facilities would be constructed. The development and operation of the proposed facilities would not require any activities that would change the soils, plants, or hydrologic conditions of any wetlands.

d. No Impact

The site of the proposed facilities is not within an area where there are any identified migratory routes for mammals. Even if waterfowl and other birds migrate through the area, the proposed facilities would not alter their migration because conditions at the site would not substantially change. Also, the proposed facilities would not change conditions for any resident animals or birds. In addition, because the proposed facilities would not result in changes to aquatic conditions, they would have no impact on resident or migratory fish.

e. No Impact

The proposed facilities would not result in any clearing of vegetation or removal of any trees. Therefore, the proposed facilities would not be inconsistent with county ordinances to protect native oaks or other local or state policies to protect vegetation.

f. No Impact

The site of the proposed facilities is not part of a Habitat Conservation Plan area. The development of the proposed facilities would not be inconsistent with any plans or policies adopted to protect biological resources or their habitats.

V. *CULTURAL RESOURCES*

Would the project:	Potentially Significant Impact	Less Than Significant With Mitigation Incorporated	Less Than Significant Impact	No Impact
a. Cause a substantial adverse change in the significance of a historic resource as defined in § 15064.5?	☐	☐	☐	☒
b. Cause a substantial adverse change in the significance of an archaeological resource pursuant to § 15064.5?	☐	☒	☐	☐
c. Directly or indirectly destroy a unique paleontological resource or site or unique geologic feature?	☐	☒	☐	☐
d. Disturb any human remains, including those interred outside of formal cemeteries?	☐	☒	☐	☐

Discussion:

a. No Impact

The site of the proposed facilities has been a developed part of the refinery for decades. There are no historic structures located at the site and the ground surface has been extensively disturbed as a result of past refinery activities. The development of the proposed facilities would not directly or indirectly result in a change in any historic resources as defined in Section 15064.5.

b. Less Than Significant with Mitigation Incorporated

There would be very limited subsurface ground disturbance required to construct the proposed facilities. Therefore, there is little possibility that any archaeological resources would be encountered during the construction. The application of the following proposed cultural resources mitigation measures would protect and properly curate any archaeological resources if they were discovered during construction.

PROPOSED CULTURAL RESOURCES MITIGATION MEASURES

Basic Control Measures (all construction sites)
• Pursuant to CEQA Guidelines 15064.5 (f), "provisions for historical or unique archaeological resources accidentally discovered during construction" should be instituted. Therefore, in the event that any prehistoric or historic subsurface cultural resources are discovered during ground disturbing activities, all work within 50 feet of the resources shall be halted and the County shall consult with a qualified archaeologist or paleontologist will be consulted to assess the significance of the find. If any find is determined to be significant, the qualified archaeologist and/or paleontologist would meet with representatives of the appropriate agency (ies) to determine the appropriate avoidance measures or other appropriate mitigation. All significant cultural materials recovered shall be subject to scientific analysis and professional museum curation. A report shall also be prepared by the qualified archaeologist according to current professional standards. • If there are unanticipated discoveries a qualified paleontologist shall be notified and subsequently shall document the discovery as needed. In the event of an unanticipated discovery of a breas, true, and/or trace fossil during construction, excavations within 100 feet of the find shall be temporarily halted or diverted until the discovery is examined by a qualified paleontologist. The paleontologist shall notify the appropriate agencies to determine procedures that would be followed before construction is allowed to resume at the location of the find.

c. Less Than Significant with Mitigation Incorporated

Because there would only be limited ground disturbance during the construction of the proposed facilities it is unlikely that paleontological resources would be directly or indirectly affected. However, the application of the proposed cultural resources mitigation measures would ensure that any paleontological resources encountered would be properly protected to comply with federal and state requirements.

d. Less Than Significant with Mitigation Incorporated

The site has been developed as a refinery for many decades and there are no records of human remains being encountered during past construction activities. The development of the proposed facilities would incorporate the proposed cultural resources mitigation measures. If any human remains were encountered during construction the appropriate mitigation measures would be implemented. For example, as appropriate, Native American representatives or the Contra Costa Coroner's Office would be notified if any human remains were unearthed during the construction of the proposed facilities.

VI. *GEOLOGY AND SOILS*

Would the project:	Potentially Significant Impact	Less Than Significant With Mitigation Incorporated	Less Than Significant Impact	No Impact
a) Expose people or structures to potential substantial adverse effects, including the risk of loss, injury, or death involving: • Rupture of a known earthquake fault, as delineated on the most recent Alquist-Priolo Earthquake Fault Zoning Map issued by the State Geologist for the area or based on other substantial evidence of a known fault? • Strong seismic ground shaking? • Seismic–related ground failure, including liquefaction? • Landslides?	☐	☐	☒	☐
b) Result in substantial soil erosion or the loss of topsoil?	☐	☐	☒	☐
c) Be located on a geologic unit or soil that is unstable or that would become unstable as a result of the project, and potentially result in on- or off-site landslide, lateral spreading, subsidence, liquefaction or collapse?	☐	☐	☒	☐
d) Be located on expansive soil, as defined in Table 18-1-B of the Uniform Building Code (UBC) (1994), creating substantial risks to life or property?	☐	☐	☒	☐
e) Have soils incapable of adequately supporting the use of septic tanks or alternative wastewater disposal systems where sewers are not available for the disposal of wastewater?	☐	☐	☐	☒

Discussion:

a. Less Than Significant

The project is located in the San Francisco Bay Area, an area of known seismic activity (seismic Zone 4). The most significant potential

geologic hazard at the project site is estimated to be seismic shaking from future earthquakes generated by active or potentially active faults in the region. Rodeo Refinery is not within a designated Alquist-Priolo Earthquake Fault Zone, nor are there any faults at the site that are considered active by the California Division of Mines and Geology.

Project facilities would be designed in accordance with the appropriate seismic criteria of the Uniform Building Code and other applicable codes. The design would be based on site-specific geologic and geotechnical conditions as determined by site-specific studies. Also, the project design would be reviewed and approved by a registered civil or structural engineer with training in design methods to prevent earthquake damage. For these reasons, the project would be expected to expose people or structures to less than substantial adverse seismic-related effects.

b. Less Than Significant

The project would involve minimal grading or slope modifications as all proposed facility/equipment pads are already level. Construction and operations would be conducted in accordance with the Rodeo Refinery's Stormwater Pollution Prevention Plan (SWPPP) that specifies measures to be taken to minimize soil erosion and topsoil loss (e.g., silt fences, hay bales). Thus, no substantial soil erosion or topsoil loss would be expected.

c. - d. Less Than Significant

Site-specific geotechnical studies and design reviews by registered civil/structural engineers would ensure that project facilities/equipment are not located on unstable soil or geologic structures or expansive soils, and thus do not create substantial risks to life and property. All fill used during the project would be competent materials and appropriately compacted in accordance with American Society for Testing and Materials (ASTM) standards.

e. No Impact

The Project would not involve use of septic tanks or alternative waste systems.

VII. GREENHOUSE GAS

Would the project:	Potentially Significant Impact	Less Than Significant with Mitigation Incorporation	Less Than Significant Impact	No Impact
a) Generate greenhouse gas emissions, either directly or indirectly, that may have a significant impact on the environment?	☐	☒	☐	☐
b) Conflict with any applicable plan, policy or regulation of an agency adopted for the purpose of reducing the emissions of greenhouse gases?	☐	☒	☐	☐

a. Less Than Significant with Mitigation Incorporated

The proposed project would generate greenhouse gas (GHG) emissions during construction and operation of the proposed project. Construction activities would generate short-term GHG emissions through the use of fuel burning construction equipment and vehicles.

As was discussed in the air quality discussion (Section 4.III), the BAAQMD's adoption of significance thresholds for air quality analysis in 2010 and 2011 are the subject of recent judicial actions and, while the thresholds are under review, the BAAQMD has indicated that lead agencies may rely on the 1999 Thresholds of Significance.

The 1999 BAAQMD CEQA Guidelines did not address the potential construction impacts from emissions of GHG. The 2011 BAAQMD CEQA Guidelines did not adopt thresholds of significance for construction-related GHG emissions but recommended the implementation of best management practices to reduce GHG emissions during construction. Mitigation measures specified for controlling exhaust emissions from construction activities in the air quality discussion (Section 4.III) would also reduce GHG emissions (minimizing idling and maintaining equipment). Given the short term nature of construction and the resultant limited GHG emissions, the application of these mitigation measures are anticipated to reduce GHG emission associated with construction to less than significant levels.

Operations of the proposed project would increase direct and indirect GHG emissions. In particular, more energy would be consumed primarily in the form of burning refinery fuel gas in the new boiler. Also, with the increase in railcars carrying butane and propane, GHG emissions would also increase somewhat from the incremental increase in freight load. In addition, there would be a relatively small increase in electricity consumption resulting in increased GHG emissions for power producers (indirect emissions).

The boiler is anticipated to be the key source of GHG emissions for the proposed project. Under expected typical operations, the estimated CO_2 emissions from the boiler are about 120,000 metric tons per year if the boiler was to run continuously at capacity or 40,000 metric tons per year under am anticipated typical scenario. The GHG estimated is based on the same assumptions used in Section 4.III for the air quality discussion. While the above values of metric ton per year is given in terms of CO_2 emission, GHG is generally quantified in terms of CO_2 equivalent (CO2e), which includes not only CO_2 but methane and nitrous oxide when dealing with combustion emissions. However, the methane and nitrous oxide emissions would typically contribute only a few percent to the total CO2e.

The 1999 BAAQMD CEQA Guidelines did not address the potential operational impacts from GHG. The 2011 BAAQMD CEQA Guidelines did specify a GHG significance threshold of 10,000 metric tons per year CO2e for stationary sources, though as discussed previously, the 2011 thresholds are under judicial review. South Coast Air Quality Management District (SCAQMD)[8] and San Luis Obispo County Air Pollution Control District (SLO County APCD)[9] also currently recommend a threshold of 10,000 metric tons. As a reference, the current GHG threshold for applicability to the Prevention of Significant Deterioration (PSD) permitting program is 75,000 or 100,000 short tons of CO2e depending on if PSD is already trigger for other pollutants. The new boiler is estimated to emit GHG in quantities greater than 10,000 metric tons per year. So while an approved GHG threshold for BAAQMD is not yet available, the estimated emissions suggest that unmitigated emissions

---

[8] SCAQMD, Air Quality Significance Thresholds, http://www.aqmd.gov/ceqa/hdbk.html, accessed June 21, 2012.

[9] SLO County APCD, CEQA Air Quality Handbook, April 2012.

of GHG may be significant. However, the Applicant will work with BAAQMD to implement appropriate mitigation measures to reduce GHG impacts to less than significant levels.

b. Less Than Significant with Mitigation Incorporated

The proposed project would not conflict with any plan or policy adopted for the purpose of reducing GHG emissions. The Applicant would obtain a permit from BAAQMD and comply with all applicable BAAQMD regulations. In addition, the facility will report GHG emissions associated with the boiler under the California and federal GHG reporting rules. The facility will also be subject to the California Cap and Trade regulation. The Cap and Trade regulation will require the facility gradually reduce onsite GHG emissions, acquire GHG allowances, and/or purchase offsets associated with GHG reductions from other entities. Thus, even though the proposed project may increase GHG emissions, the facility would implement actions to support the state's goal of reducing GHG emissions to 1990 levels by 2020. Also, as stated above, the Applicant would work with BAAQMD to implement appropriate mitigation measures to reduce GHG emissions from the proposed project, reducing any potential impacts to less than significant levels.

VIII. HAZARDS AND HAZARDOUS MATERIALS

Would the project:	Potentially Significant Impact	Less Than Significant With Mitigation Incorporated	Less Than Significant Impact	No Impact
a) Create a significant hazard to the public or the environment through the routine transport, use, or disposal of hazardous materials?	☐	☐	☒	☐
b) Create a significant hazard to the public or the environment through reasonably foreseeable upset and accident conditions involving the release of hazardous materials into the environment?	☐	☐	☒	☐
c) Emit hazardous emissions, or handle hazardous or acutely hazardous materials, substances, or waste within one-quarter mile of an existing or proposed school?	☐	☐	☒	☐
d) Be located on a site which is included on a list of hazardous materials sites compiled pursuant to Government Code §65962.5 and, as a result, would create a significant hazard to the public or the environment?	☐	☐	☒	☐
e) For a project located within an airport land use plan or, where such a plan has not been adopted, within two miles of a public airport or public use airport, would the project result in a safety hazard for people residing or working in the project area?	☐	☐	☐	☒
f) For a project within the vicinity of a private airstrip, would the project result in a safety hazard for people residing or working in the project area?	☐	☐	☐	☒
g) Impair implementation of or physically interfere with an adopted emergency response plan or emergency evacuation plan?	☐	☐	☐	☒
h) Expose people or structures to a significant risk of loss, injury or death involving wildland fires, including where wildlands are adjacent to urbanized areas or where residences are intermixed with wildlands?	☐	☐	☐	☒

Discussion:

a. Less Than Significant Impact

The proposed project would increase the handling and transport of propane and butane. However, the current petroleum-refining operations already involve the routine transport, use, and disposal of various hazardous materials including propane and butane. All aspects of the proposed project would be subject to state and federal regulations that address safe handling of hazardous materials and accident prevention and countermeasures. As a result, the proposed project is expected to have a less than significant impact to the public or environment as a result of the handling and transport of hazardous materials.

b. Less Than Significant Impact

In addition to increasing the handling and transport of propane and butane, there is the potential that the project will include a new boiler that may also require NOx control, most likely a Selective Catalytic Reduction (SCR) unit. Ammonia injection would be needed for SCR, although the amount is small compared to the refinery's current use of it for injection into other boilers and heaters that have SCR controls. To mitigate any potential hazards, the refinery uses aqueous ammonia. In addition, the proposed project would not include new storage for ammonia. The ammonia would simply be piped to the boiler, which would be located in an area where there is already ammonia use. All aspects of the proposed project would be subject to state and federal regulations that address safe handling of hazardous materials and prevention and minimization of accidental releases. Therefore, the impacts from foreseeable upsets and accidental conditions are anticipated to be less than significant.

c. Less Than Significant Impact

The project would not involve an increase in hazardous emissions or use of hazardous or acutely hazardous materials or hazardous waste within one-quarter mile of a school. The loading operations would take place approximately 3,900 feet from the closest daycare facility or school. There would be additional railcars of butane and propane traveling past this facility. However, current refinery operations routinely involve the transport of flammable/combustible materials,

and the CFEP EIR concluded the risk of railcar accident as improbable. Therefore, impacts to the school from the handling of hazardous materials are anticipated to be less than significant.

d. Less Than Significant Impact

The Rodeo Refinery is on the Government Code §65962.5 Resources Conservation and Recovery Information System (RCRIS) database. The refinery is listed due to its potential to generate large quantities of hazardous waste. Wastes generated are stored and disposed of properly. Hazardous wastes are manifested and shipped to an approved permitted facility. With management of its hazardous materials and wastes conducted in compliance with applicable laws and regulations, the Phillips 66 Rodeo Refinery's inclusion on the RCRIS database does not indicate a significant hazard to the public or the environment.

e., f. No Impact

The proposed project site is not located within an airport land use plan nor is it within 2 miles of a public or private airport. The proposed project would not result in an airport or aircraft-related safety hazard for people within the project area and therefore would have no impact.

g. No Impact

The project would not interfere with the implementation of the refinery's Emergency Response Plan. The internal integration and external coordination would minimize interference with the Emergency Response Plan. For example, to maintain the adopted emergency response plan whenever new equipment or processes are installed, training is conducted to familiarize operators. Also, the refinery's procedures for the Management of Change would minimize the likelihood of introducing new hazards to plant operations. Therefore, there would be no impact.

h. No Impact

The project will involve construction and modification of existing areas of the refinery zoned and planned for heavy industrial use. To minimize potential fires, the facility has its own fire protection unit and measures, including buffers between process areas and fence lines. The

facility is also served by the Rodeo-Hercules Fire Department. The probability of a wildland fire would not substantially increase because of the project. Therefore, there would be no impact from the proposed project.

IX. *HYDROLOGY AND WATER QUALITY*

Would the project:	Potentially Significant Impact	Less Than Significant With Mitigation Incorporated	Less Than Significant Impact	No Impact
a) Violate any water quality standards or waste discharge requirements?	☐	☐	☒	☐
b) Substantially deplete groundwater supplies or interfere substantially with groundwater recharge such that there would be a net deficit in aquifer volume or a lowering of the local groundwater table level (e.g., the production rate of pre-existing nearby wells would drop to a level which would not support existing land uses or planned uses for which permits have been granted)?	☐	☐	☐	☒
c) Substantially alter the existing drainage pattern of the site or area, including through alteration of the course of a stream or river, in a manner that would result in substantial erosion or siltation on- or off-site?	☐	☐	☒	☐
d) Substantially alter the existing drainage pattern of the site or area, including through alteration of the course of a stream or river, or substantially increase the rate or amount of surface runoff in a manner that would result in flooding on- or off-site?	☐	☐	☒	☐
e) Create or contribute runoff water which would exceed the capacity of existing or planned stormwater drainage systems or provide substantial additional sources of polluted runoff?	☐	☐	☒	☐
f) Otherwise substantially degrade water quality?	☐	☐	☒	☐
g) Place housing within a 100-year flood hazard area as mapped on a federal Flood Hazard Boundary or Flood Insurance Rate Map or other flood hazard delineation map?	☐	☐	☐	☒
h) Place within a 100-year flood hazard area structures that would impede or redirect flood flows?	☐	☐	☒	☐
i) Expose people or structures to a significant risk of loss, injury or death involving flooding, including flooding as a result of the failure of a levee or dam?	☐	☐	☒	☐
j) Inundation by seiche, tsunami, or mudflow?	☐	☐	☒	☐

Discussion:

a. and f. Less Than Significant Impact

The new and modified facilities and equipment would have a negligible effect on the potential for a spill of hydrocarbons or materials containing hydrocarbons into the nearby San Pablo Bay due to adhering to a regular inspection and maintenance schedule, and incorporating the project into Rodeo Refinery's spill response and overall emergency response procedures and plans.

Routine wastewater discharges from project activities would be handled by Rodeo Refinery's wastewater treatment system. Wastewater discharges and stormwater runoff from Rodeo Refinery to San Pablo Bay is regulated by the facility's National Pollutant Discharge Elimination System (NPDES) permit. Wastewater discharges and stormwater runoff patterns would not substantially change as a result of the project. Overall flows to the wastewater treatment plant are expected to increase slightly by approximately 0.07 million gallons per day (mgd) due to cooling tower blowdown. Rodeo Refinery's wastewater treatment plant has a capacity of 10 mgd, while current flows are approximately 2.5 mgd. Thus, there is ample capacity to handle project wastewater flows.

b. No Impact

EBMUD supplies water to Rodeo Refinery, thus the refinery does not depend upon groundwater supply, nor will the project. There are no groundwater basins within 10 miles of Rodeo Refinery. No substantial impact on groundwater resources would be expected.

c. – e. Less Than Significant Impact

Project implementation would involve only minimal grading activities and changes in topography at Rodeo Refinery. All new facilities and equipment would be located at specific sites that have been long used for refinery operations; no currently unpaved areas would be made impermeable. There will be no substantial changes in stormwater runoff or drainage patterns. Rodeo Refinery's SWPPP will be updated to incorporate the proposed project. Adherence to the techniques specified in the SWPPP will minimize the risk of contamination of local waterways.

Project construction activities could contribute to silt in the stormwater runoff. However, Rodeo Refinery will follow the approaches outlined in a construction-phase SWPPP that will be prepared to minimize potential contamination of local waterways. This includes the use of runoff controls such as silt fences and hay bales to control surface erosion and runoff.

Therefore, erosion, siltation, drainage, and runoff impacts are expected to be less than significant

g. No Impact

The Rodeo Refinery is adjacent to San Pablo Bay, which is within the San Francisco Bay area and east of the San Francisco and Marin peninsulas. As shown on Figure 8, the vast majority of Rodeo Refinery property is outside the 100-year flood plain. However, the proposed new loading rack, along with other nearby existing equipment, is located within the 100-year flood plain. Nevertheless, the proposed project would not place housing in a 100-year flood area.

h-i. Less Than Significant Impact

The Rodeo Refinery is adjacent to San Pablo Bay, which is within the San Francisco Bay area and east of the San Francisco and Marin peninsulas. As discussed above, the vast majority of Rodeo Refinery property, is outside the 100-year flood plain, but the proposed new loading rack, along with other nearby existing equipment, is located within the 100-year flood plain. The proposed project will be designed and appropriate procedures updated to address the fact that the loading rack will be in the 100-year flood plain. With the appropriate designs and procedures, the impact to people or structures to significant flood-related risks will be less than significant.

j. Less Than Significant Impact

The nearest project location to the San Pablo Bay is the loading rack which is approximately 200 feet east of the Bay. Due to the relatively large size of San Pablo Bay, with an inlet to the east and an outlet to the south, the hazard of seiche waves is interpreted to be low. In addition, there is no historic record of such waves occurring in San Pablo Bay during strong earthquakes.

Since 1868, approximately 19 tsunamis have been recorded for the San Francisco Bay. Of these, the maximum wave height measured at the Golden Gate Tide Gauge was 7.4 feet, which is considered to be a reasonable maximum for the future (Contra Costa County, 2005). Due to attenuation within the bay, a tsunami wave at the Golden Gate would diminish to a height of approximately half that in Richmond.[10]

However, with the appropriate designs and procedures, the impact from inundation by seiche, tsunami, or mudflow is anticipated to be less than significant.

---

[10] ConocoPhillips Rodeo Refinery, Clean Fuels Expansion Project, Environmental Impact Report, November 2006

X. *LAND USE AND PLANNING*

Would the project:	Potentially Significant Impact	Less Than Significant With Mitigation Incorporated	Less Than Significant Impact	No Impact
a) Physically divide an established community?	☐	☐	☐	☒
b) Conflict with any applicable land use plan, policy, or regulation of an agency with jurisdiction over the project (including, but not limited to the general plan, specific plan, local coastal program, or zoning ordinance) adopted for the purpose of avoiding or mitigating an environmental effect?	☐	☐	☐	☒
c) Conflict with any applicable habitat conservation plan or natural community conservation plan?	☐	☐	☐	☒

Discussion:

a. No Impact

The refinery has been located at the current site for many decades. The development of the proposed facilities would be entirely within the footprint of the refinery and would not result in division of the community of Rodeo or other residential areas.

b. No Impact

The refinery and the proposed project are compatible with the uses of the site as set forth in the General Plan. The refinery is zoned as heavy industrial and the proposed facilities are compatible with that land-use designation.

c. No Impact

As set forth in the analysis of Biological Resources, the refinery is not the subject of a Habitat Conservation Plan or a Natural Community Plan. The development of the proposed facilities would not result in any biological impacts or impacts to any known plans for protecting biological resources.

XI. *MINERAL RESOURCES*

Would the project:	Potentially Significant Impact	Less Than Significant With Mitigation Incorporated	Less Than Significant Impact	No Impact
a) Result in the loss of availability of a known mineral resource that would be of value to the region and the residents of the state?	☐	☐	☒	☐
b) Result in the loss of availability of a locally important mineral resource recovery site delineated on a local general plan, specific plan or other land use plan?	☐	☐	☐	☒

Discussion:

a. Less Than Significant Impact

There are no known significant mineral resources on the facility and so the proposed project would not have a significant impact on the availability of mineral resource. Though, in the process of producing energy, fuels, and electricity, some of which is supplied to the regional electrical grid, the project may consume additional natural gas that would be purchased from PG&E. Although Rodeo Refinery typically uses refinery fuel gas for this purpose, natural gas will be used at times when the supply of refinery fuel gas is inadequate for operating needs. The quantities of natural gas consumed would not represent a substantial impact on the availability of natural gas supplies for other users in the region and state.

b. No Impact

There are no known significant mineral resources on Rodeo Refinery property. The project would not result in the loss of availability of a locally important mineral resource recovery site.

XII. NOISE

Would the project:	Potentially Significant Impact	Less Than Significant With Mitigation Incorporated	Less Than Significant Impact	No Impact
a) Exposure of persons to, or generation of, noise levels in excess of standards established in the local general plan or noise ordinance, or applicable standards of other agencies?	☐	☐	☒	☐
b) Exposure of persons to, or generation of, excessive ground-borne vibration or ground-borne noise levels?	☐	☐	☒	☐
c) A substantial permanent increase in ambient noise levels in the project vicinity above levels existing without the project?	☐	☐	☒	☐
d) A substantial temporary or periodic increase in ambient noise levels in the project vicinity above levels existing without the project?	☐	☐	☒	☐
e) For a project located within an airport land use plan or, where such a plan has not been adopted, within two miles of a public airport or public use airport, would the project expose people residing or working in the project area to excessive noise levels?	☐	☐	☐	☒
f) For a project within the vicinity of a private airstrip, would the project expose people residing or working in the project area to excessive noise levels?	☐	☐	☐	☒

Discussion:

a., c., and d. Less Than Significant Impact

Project construction would involve a temporary increase in the use of heavy construction equipment and trucks at Rodeo Refinery. Based upon previous studies, and given the expected spread of construction equipment used for the proposed project, noise levels from project construction activities would generate maximum average hourly noise levels of approximately 85 decibels on the A scale (dBA) at a distance of 100 feet from the center of the construction activities.

Ambient noise monitoring and impact analyses provided in the 1994 Reformulated Gasoline (RFG) Project EIR[11] indicated noise levels at the nearest sensitive receptors (residences south and west of Rodeo Refinery) of less than 55 dBA. The predicted noise levels were below the 60 dBA (daytime) and 55 dBA (nighttime) limits that were considered as the local significance criteria for construction noise impacts. Proposed project construction activities involve similar equipment and thus similar noise sources to those associated with the RFG project. The nearest sensitive receptors that could be affected by the proposed project construction activity noise are situated approximately 2,100 feet to the south of the refinery. For these reasons, noise impacts of project construction would not be expected to be significant.

During operation, the project would involve the use of new and modified process units at Rodeo Refinery that are similar to the units that already are in operation at the facility. Although noise emission characteristics for project facilities and equipment are not available, it is considered likely that the new equipment would have similar noise characteristics to the existing facilities and equipment. Project facilities and equipment would be in the middle of the active developed area of Rodeo Refinery, and would not represent new noise sources closer to the perimeter of the site (i.e., closer to off-site sensitive receptors). Thus, it is not expected that project operations would lead to a substantial increase in noise levels in the surrounding community.

b. Less Than Significant Impact

No substantial ground-borne noise or vibration would be expected as a result of project construction or operation.

e. and f. No Impact

The proposed project site is not located within an airport land use plan nor is it within 2 miles of a public or private airport and thus there would be no impact.

---

[11] Unocal Corporation, Draft Environmental Impact Report for Reformulated Gasoline Project, June 1994.

XIII. POPULATION AND HOUSING

Would the project:	Potentially Significant Impact	Less Than Significant With Mitigation Incorporated	Less Than Significant Impact	No Impact
a) Induce substantial population growth in an area, either directly (for example, by proposing new homes and businesses) or indirectly (for example, through extension of roads or other infrastructure)?	☐	☐	☒	☐
b) Displace substantial numbers of existing housing, necessitating the construction of replacement housing elsewhere?	☐	☐	☐	☒
c) Displace substantial numbers of people, necessitating the construction of replacement housing elsewhere?	☐	☐	☐	☒

Discussion:

a. Less Than Significant Impact

The proposed project will not result in the development of new housing or infrastructure to support population growth. The proposed facilities will average approximately 250 temporary jobs at the site to construct the proposed facilities. It is expected that the construction personnel will come from the existing labor pool in Contra Costa County and adjoining areas and that the temporary work force would not require new housing. The operation of the proposed facilities will not involve any additional permanent personnel at the refinery. It is expected that these new personnel would find housing, if they are relocating from outside the area, within the existing housing stock.

b. No Impact

The proposed facilities will be constructed within the existing refinery. Therefore there would be no displacement of existing housing.

c. No Impact

The proposed project would not result in the displacement of any people.

XIV. PUBLIC SERVICES

Would the project:	Potentially Significant Impact	Less Than Significant With Mitigation Incorporated	Less Than Significant Impact	No Impact
a) Result in substantial adverse physical impacts associated with the provision of new or physically altered governmental facilities, need for new or physically altered government facilities, the construction of which could cause significant environmental impacts, in order to maintain acceptable service ratios, response times or other performance objectives for any of the following public services: • Fire protection? • Police protection? • Schools? • Parks? • Other public facilities?	☐	☐	☐	☒

Discussion:

a. No Impact

The refinery has its own fire protection unit that would provide initial response if there were a fire during the development and operation of the proposed facilities. There should be no increase in police protection required by the construction and operation of the proposed facilities. Police service is provided by the Contra Costa County Sheriff's Department. Because there will be no change in population as a result of construction and operation of the proposed facilities, there will be no increased or decreased demand for schools. Because there will be no change in population as a result the new facilities, either during construction or operation, there would be no increase in demand for recreation facilities. The proposed facilities would be constructed and operated by a work force already resident in the region and would not result in new demands for other public facilities.

XV. RECREATION

Would the project:	Potentially Significant Impact	Less Than Significant With Mitigation Incorporated	Less Than Significant Impact	No Impact
a) Increase the use of existing neighborhood and regional parks or other recreational facilities such that substantial physical deterioration of the facility would occur or be accelerated?	☐	☐	☒	☐
b) Does the project include recreational facilities or require the construction or expansion of recreational facilities that might have an adverse physical effect on the environment?	☐	☐	☐	☒

Discussion:

a. Less Than Significant Impact

The construction of the proposed facilities would be short term and would be accomplished using a workforce of laborers resident in the region. If the construction workforce were to use the local recreation facilities in the Rodeo area, the impact would be only short term. Because the refinery goes through periodic construction periods without impact to the local recreation resources, it is not expected that the construction of the proposed facilities would result in any short-term impacts to the local recreation facilities. The operation of the proposed facilities will not result in additional permanent workers at the site and would not result in an increased demand on existing local recreation facilities.

b. No Impact

The development of the proposed facilities would not result in the development of additional recreation facilities. Because the construction and operation of the proposed facilities would not result in any increase to population, there would be no demand for the construction or expansion of recreation facilities.

XVI. TRANSPORTATION/TRAFFIC

Would the project:	Potentially Significant Impact	Less Than Significant With Mitigation Incorporated	Less Than Significant Impact	No Impact
a) Cause an increase in traffic, which is substantial in relation to the existing traffic load and capacity of the street system (i.e., result in a substantial increase in either the number of vehicle trips, the volume to capacity ratio on roads, or congestion at intersections)?	☐	☐	☒	☐
b) Exceed, either individually or cumulatively, a level of service standard established by the county congestion management agency for designated roads or highways?	☐	☐	☒	☐
c) Result in a change in air traffic patterns, including either an increase in traffic levels or a change in location that results in substantial safety risks?	☐	☐	☐	☒
d) Substantially increase hazards due to a design feature (e.g., sharp curves or dangerous intersections) or incompatible uses (e.g., farm equipment)?	☐	☐	☐	☒
e) Result in inadequate emergency access?	☐	☐	☐	☒
f) Result in inadequate parking capacity?	☐	☐	☐	☒
g) Conflict with adopted policies, plans, or programs supporting alternative transportation (e.g., bus turnouts, bicycle racks)?	☐	☐	☐	☒

Discussion:

a. and b. Less Than Significant Impact

The proposed project would involve a maximum of approximately 400 two-way vehicle trips per day at the peak of construction. This would consist of approximately 380 worker commute trips (assuming one person per vehicle) and 20 truck trips delivering materials and supplies.

The local street system provides access to Rodeo Refinery's site from both the north and south. Trips from the south would pass through the community of Rodeo. Access from the north is provided via Cummings Skyway, built by the Rodeo Refinery several years ago. Since the construction of Cummings Skyway, the majority of refinery

truck and employee traffic uses that route and the north entrance to Rodeo Refinery, thereby avoiding impact to the street system of Rodeo. Project construction traffic would be expected (and encouraged) also to use Cummings Skyway to avoid Rodeo. Project construction traffic accessing Cummings Skyway from Interstate 80 would account for less than one percent of average daily traffic on Interstate 80. Project operations would not affect traffic since the project will not result in the increase of any permanent employees.

With the expected heavy use of Cummings Skyway during construction and no impact on traffic volumes during operations, the project would not be expected to substantially increase traffic volumes and congestion such that level of service would be adversely affected.

c. – g. No Impact

The project would have no impact on traffic patterns. No roadway construction or modification of access to Rodeo Refinery would occur, thus there would be no change in roadway hazards. The project would have no impact on emergency access to Rodeo Refinery. There is adequate parking capacity on Rodeo Refinery property to provide the needed parking capacity for the peak construction workforce. Because of no change in permanent employment, there would be no impact on parking capacity during operations. The project would not conflict with policies, plans, or programs supporting alternative transportation.

XVII. UTILITIES AND SERVICE SYSTEMS

Would the project:	Potentially Significant Impact	Less Than Significant With Mitigation Incorporated	Less Than Significant Impact	No Impact
a) Exceed wastewater treatment requirements of the applicable Regional Water Quality Control Board?	☐	☐	☒	☐
b) Require or result in the construction of new water or wastewater treatment facilities or expansion of existing facilities, the construction of which could cause significant environmental effects?	☐	☐	☐	☒
c) Require or result in the construction of new stormwater drainage facilities or expansion of existing facilities, the construction of which could cause significant environmental effects?	☐	☐	☐	☒
d) Have sufficient water supplies available to serve the project from existing entitlements and resources, or are new or expanded entitlements needed?	☐	☐	☐	☒
e) Result in a determination by the wastewater treatment provider that serves or may serve the project that it has adequate capacity to serve the project's projected demand in addition to the provider's existing commitments?	☐	☐	☐	☒
f) Be served by a landfill with sufficient permitted capacity to accommodate the project's solid waste disposal needs?	☐	☐	☒	☐
g) Comply with federal, state, and local statues and regulations related to solid waste?	☐	☐	☐	☒

Discussion:

a. Less Than Significant Impact

As identified previously, operation of the proposed facilities would result in changes to the discharges to the refinery's wastewater treatment plant. There is ample capacity for treating the anticipated 72,000 gallons per day of wastewater and the proposed project would not result in conditions that are not in compliance with the Rodeo Refinery's NPDES permit.

b. No Impact

The discharges related to the construction and operation of the proposed facilities would be treated in the refinery's existing wastewater treatment plant. No new facilities would be required and there would be no impacts associated with any construction at the treatment plant.

c. No Impact

Storm water from the proposed facilities, during both construction and operation, would be managed in the existing storm drain system. No new storm drain facilities would be required and there would be no change in the water quality discharged to the system.

d. No Impact

Fresh water consumption from EBMUD will not increase with the operation of the proposed facilities. Project water use during construction is negligible, less than 600 gallons per day. Therefore, no modifications to the EBMUD water distribution system will be required.

e. No Impact

The wastewater treatment plant at the refinery has adequate capacity to treat the discharges from the proposed facilities. No additional capacity is required and no changes to the existing treatment system are needed to treat the additional wastewater.

f. Less Than Significant Impact

The refinery has an ongoing recycling program and it would be employed during the construction and operation of the proposed facilities. Construction debris that could not be recycled would be sent to a sanitary landfill in compliance with the Contra Costa County Solid Waste Management Plan. Little additional solid waste is expected to be generated during the operation of the proposed facilities, but it would also be recycled or transported to an approved solid waste landfill. Therefore, the increase in solid waste sent to the landfills would have a less than significant impact on the landfill.

g. No Impact

The refinery is currently complying with federal, state, and county requirements related to management of solid waste. It is not expected that the construction or operation of the proposed facilities would affect the refinery's ability to maintain compliance with the requirements.

Figures

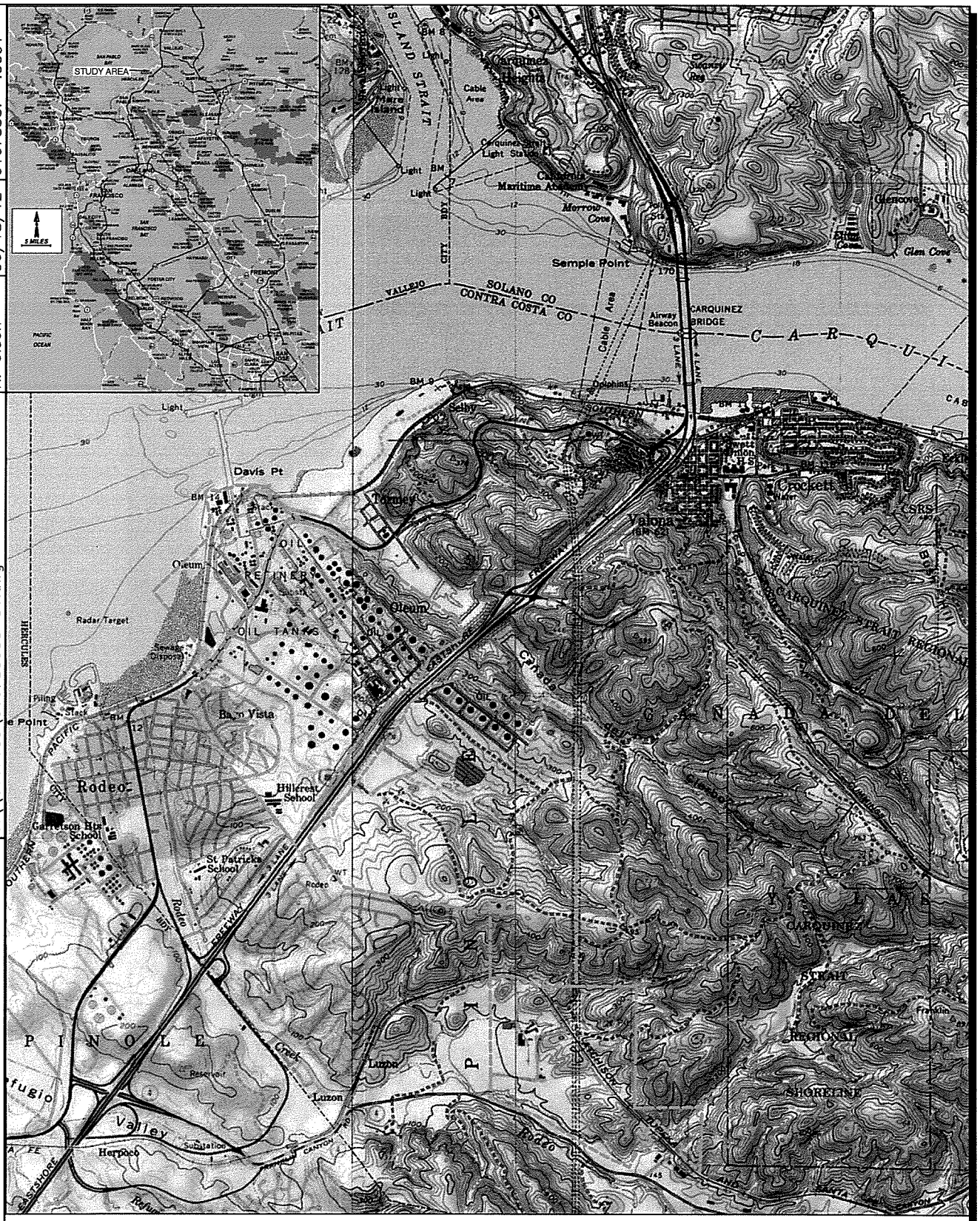

N

1" = 3000'

0 1500' 3000' 6000' 9000'

References:
TOPO!® Software
U.S.G.S. Regional Quadrangle

LEGEND

PROPERTY BOUNDARY

Figure 1
Site Location Map
Phillips 66
Rodeo, California

ERM *06/12*

CAD File:	Drawn By:	Date:	Project No.
G:\\0167855\016785500-01.dwg	R. Olson	06/18/12	0167855.***.0001

LEGEND

PROPERTY BOUNDARY

Aerial Photo Source: © 2012 Google Earth Pro
Ver 5.2.1.1588

0 1000 2000
FEET

Figure 2
Aerial of Facility
Phillips 66
Rodeo, California

ERM *06/12*

CAD File:	Drawn By:	Date:	Project No.
G:\\0167855\016785500-01.dwg	R. Olson	06/18/12	0167855.***.0001

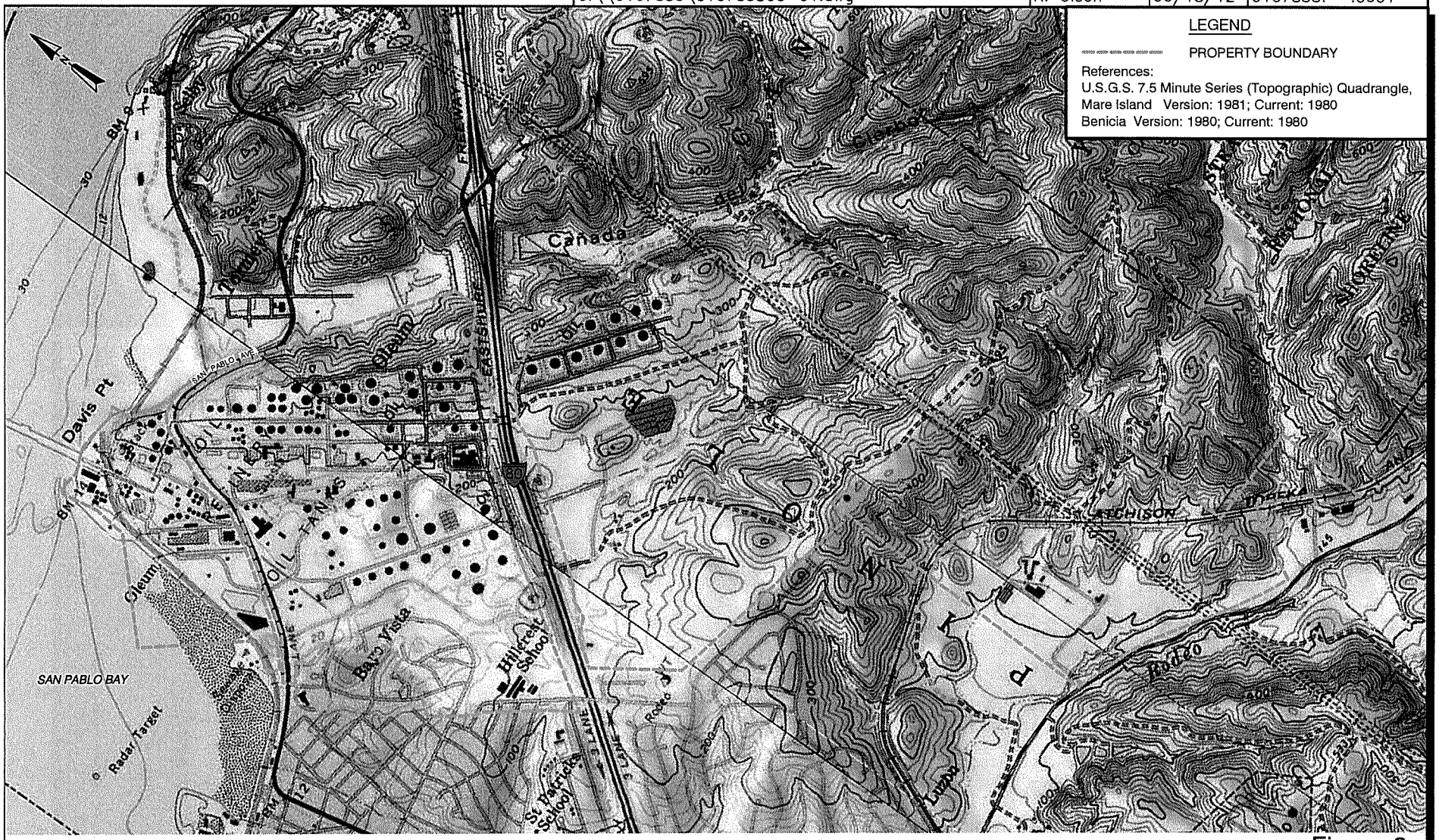

SCALE 1:24,000

1 1/2 0 1 MILE

1000 0 1000 2000 3000 4000 5000 6000 7000 FEET

1 .5 0 1 KILOMETER

Figure 3

Topography of Facility

Phillips 66

Rodeo, California

ERM *06/12*

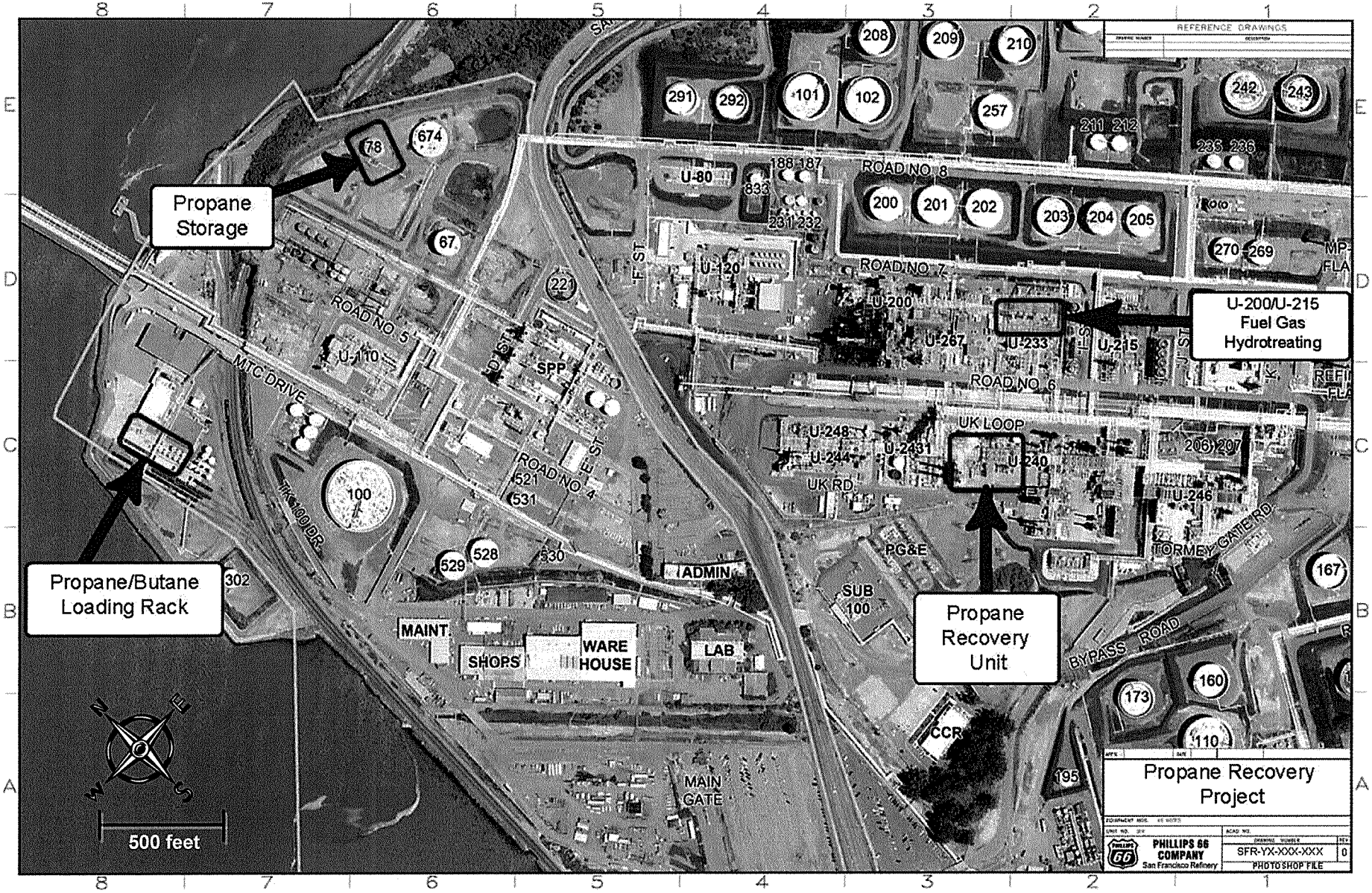

Figure 4
Locations of Site Modifications
Phillips 66
Rodeo, California

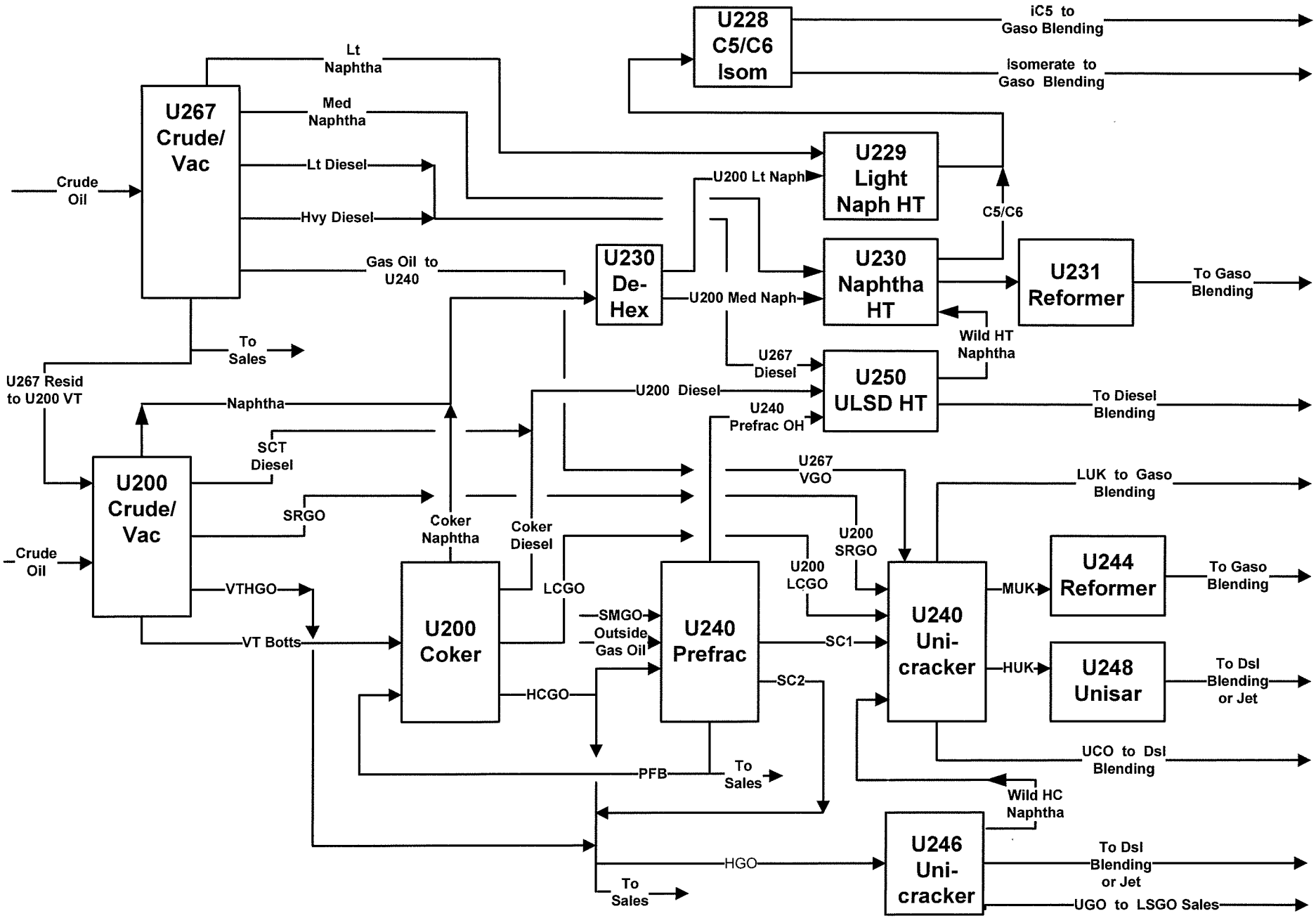

Figure 5

Overall Block Flow Diagram of Refinery
Phillips 66
Rodeo, California

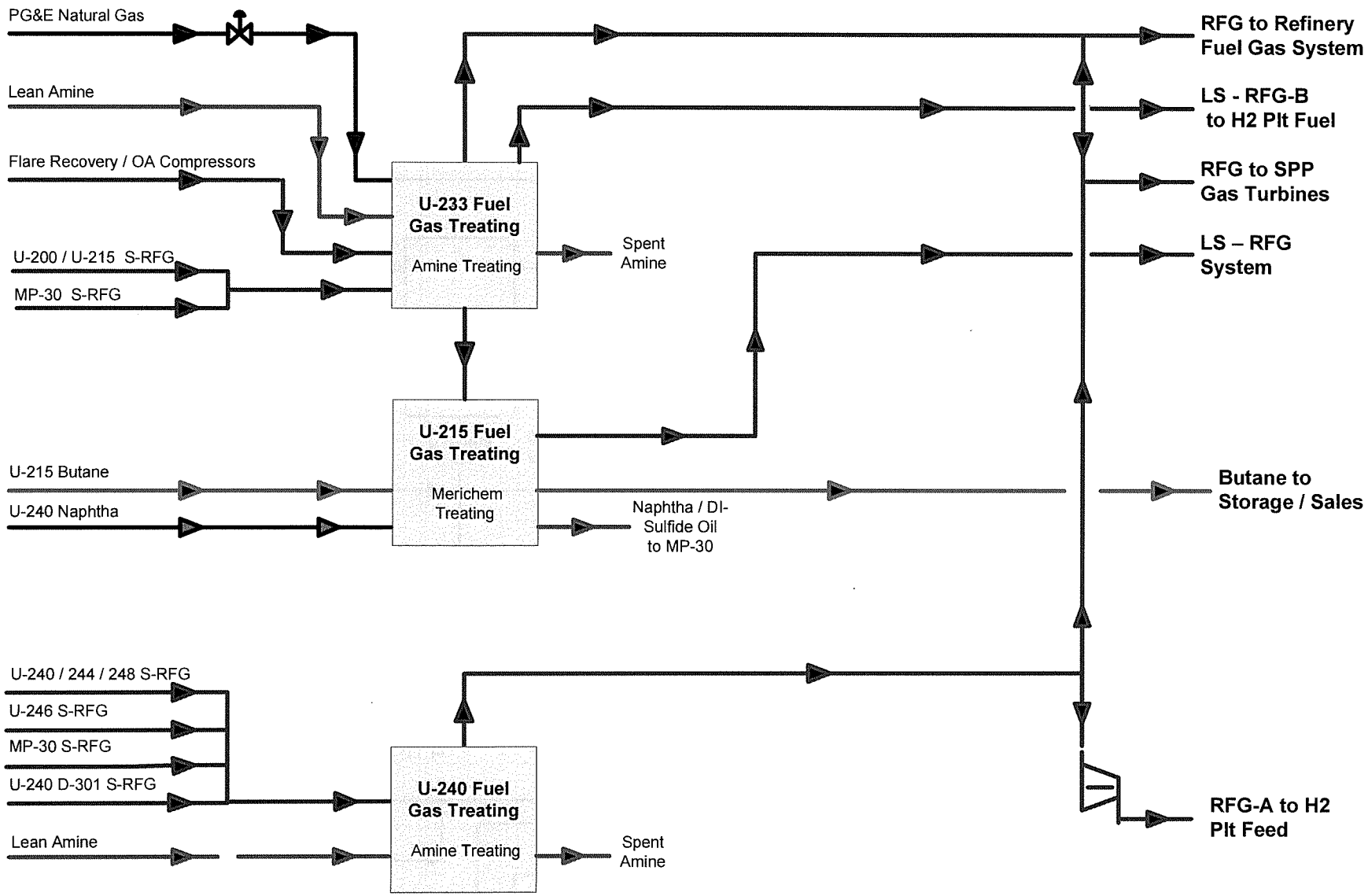

Figure 6
Existing Refinery Fuel Gas System Block Flow Diagram
Phillips 66
Rodeo, California

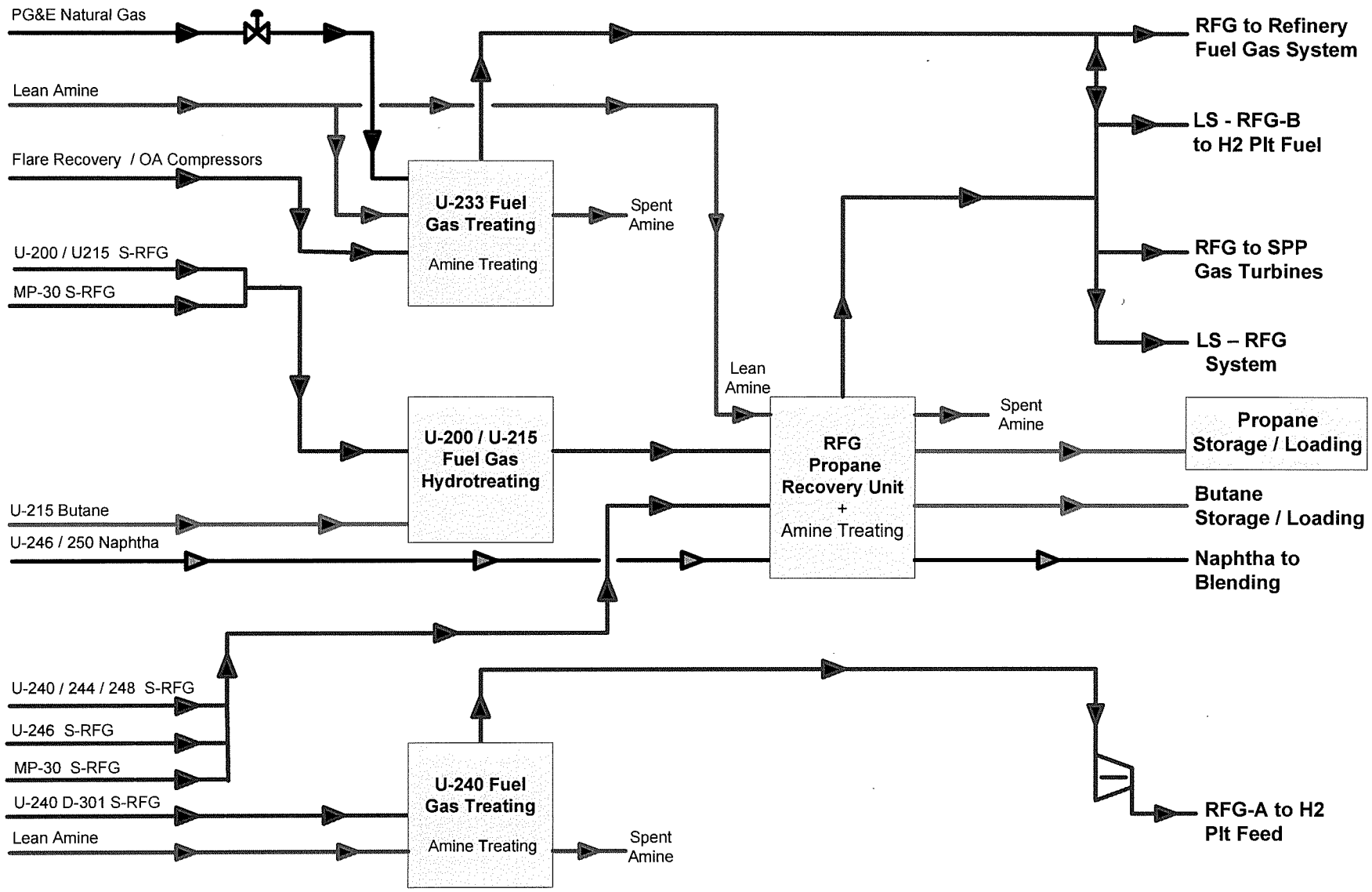

Figure 7

Proposed Refinery Fuel Gas System Block Flow Diagram
Phillips 66
Rodeo, California

Appendix A
Contra Costa County Land Use
Permit Application Forms

CONTRA COSTA COUNTY
Department of Conservation & Development
Community Development Division

LAND USE PERMIT APPLICATION

TO BE COMPLETED BY OWNER OR APPLICANT

OWNER	APPLICANT
Name Phillips 66 Company	Name Phillips 66 Company
Address 1380 San Pablo Avenue	Address 1380 San Pablo Avenue
City, State/Zip Rodeo, CA 94572	City, State/Zip Rodeo, CA 94572
Phone 510-799-4411 email	Phone 510-799-4411 email
By signing below, owner agrees to pay all costs, including any accrued interest, if the applicant does not pay costs. ☐ Check here if billings are to be sent to applicant rather than owner. **Owner's Signature**	By signing below, applicant agrees to pay all costs for processing this application plus any accrued interest if the costs are not paid within 30 days of invoicing. **Applicant's Signature**
CONTACT PERSON (optional)	**PROJECT DATA**
Name Brent Eastep	Total Parcel Size: 495 Acres (Total active refinery area – current project locations are a subset of this area)
Address 1380 San Pablo Avenue	Proposed Number of Units: N/A
City, State/Zip State Rodeo, CA 94572	Proposed Square Footage: N/A
Phone 510-245-4672 email Brent.P.Eastep@p66.com	Estimated Project Value: $100,000,000

Project description (attach supplemental statement if necessary): See Project Description in attached Rodeo Propane Recovery Project Land Use

FOR OFFICE USE ONLY **FOR OFFICE USE ONLY** **FOR OFFICE USE ONLY**

Project description:

Property description:

Ordinance Ref.:	TYPE OF FEE	FEE	CODE	Assessor's #:
Area:	*Base Fee/Deposit	$	S-	Site Address:
Fire District:	Late Filing Penalty (+50% of above if applicable)		S-066	Zoning District:
Sphere of Influence:	½% est. value over $100,000		S-029	Census Tract:
Flood Zone:	#Units _____x $195.00 / Sq. Ft. x $0.20		S-014	Atlas Page:
Panel Number:	Notification Fee	15.00 / 30.00	S-052	General Plan:
x-ref Files:	Fish & Game Posting (if not CEQA exempt)	75.00	S-048	LP/DP Combination: YES ☐ NO ☐
	Environmental Health Dept.	47.00	5884	Supervisorial District:
	Other:			Received by:
Concurrent Files:	**TOTAL**	$		Date Filed:
	Receipt	#		File #LP
	*Additional fees based on time and materials will be charged if staff costs exceed base fee.			

INSTRUCTIONS ON REVERSE

(OVER)

SUBMITTING YOUR APPLICATION

1. PREPARE a plot (site) plan, floor plans and building elevations clearly and legibly drawn to a commonly used scale with the following information, and verify (by initialing) that the information is included on the plans:

Applicant's Initials	
	Plot (site) Plan
DB	a. All existing property lines labeled and fully dimensioned.
DB	b. All public and private roads, easements and drainage installations adjacent to the subject parcel(s).
N/A	c. All existing and proposed improvements (including drainage) with distances to all property lines.
N/A	d. Distance from property lines to existing improvements on parcels adjoining the subject parcel(s).
N/A	e. Names of adjoining property owner(s).
DB	f. Topographic contours labeled with elevation, known geologic hazards, creeks/streams and drainage ditches.
N/A	g. Location, species, drip lines and trunk diameters of all trees with a diameter of 6 inches or greater, measured 4½ feet above ground whose trunks lie within 50 feet of any proposed improvements. This shall include all such trees on the subject property as well as trees on adjoining properties whose canopy extends onto the subject property. Number the trees for identification purposes and indicate if they are to be removed or altered in any way.
DB	h. North arrow and scale.
N/A	i. Existing and proposed parking layouts, driveways and landscaped areas (all fully dimensioned).
N/A	j. Computations of lot coverage, gross floor area and landscaped areas (all indicated in square feet).
N/A	k. Area of the subject parcel(s) officially mapped within the boundary of a Special Flood Hazard Area (if applicable).
DB	l. A vicinity map showing sufficient information such as streets, highways, railroad tracks, water bodies, landmarks etc. to locate the subject parcel(s).
	Floor Plans
N/A	m. All rooms, hallways and other common areas with their dimensions and use (i.e. bedroom, kitchen, etc.).
N/A	n. Locations of doorways, stairways and landings, windows, permanent fixtures (sinks, toilets, showers, etc.) and major mechanical equipment (hot water heaters, furnaces, etc.).
	Building Elevations
N/A	o. Exterior dimensions (height, width, depth) of all proposed improvements. Height is measured at the point within the building footprint that has the greatest distance between the ground and the top of the building directly above.
N/A	p. Proposed exterior ornamentation such as shutters, planting boxes, window trim, cornices, signs, railings, etc.
N/A	q. Proposed exterior materials (i.e. wood siding, stucco, stone veneer, concrete tile roof, etc.).

2. HAND DELIVER (do not mail) the following to the Contra Costa County Application & Permit Center:

N/A	r. Three (3) full size sets of plans (no larger than 24" x 36") and twelve (12) reduced sets (no larger than 11" x 17"). All sets must be folded to approximately 8½" x 11". **Rolled plans will not be accepted.**
DB	s. Completed application form (reverse side of this sheet).
DB	t. "Important Notice to Applicants" (blue form) signed and dated.
DB	u. *Required deposit and miscellaneous fees. Checks may be made payable to Contra Costa County.

* **Please note that the fees described on this form are related only to the Contra Costa County Community Development and Public Works [(925) 313-2000] departments' costs for processing your application. Additional fees and requirements may be imposed by federal, state and local agencies that may be involved in reviewing your project. It is the applicant's responsibility to investigate whether additional fees and requirements will be imposed.**

APPLICANT VERIFICATION

I verify that all of the information submitted as indicated by my initials is complete and accurate to the best of my knowledge and further acknowledge that should it be found that any of the information is incorrect or incomplete it may result in increased processing time and/or costs. I acknowledge that all staff costs are borne by the applicant and if necessary, additional deposits will be required. I also acknowledge that I have completely read this form and understand all of the information stated herein

Signature [signature] Name (print) Don Bristol Date 6-21-2012

Contra Costa County Department of Conservation & Development
Community Development Division
Application & Permit Center
30 Muir Rd.,

(OVER)

Martinez, CA 94553
(925) 674-7200

IMPORTANT NOTICE TO APPLICANTS & PROPERTY OWNERS

The purpose of this notice is to alert you to various issues which may affect your proposed project development. You are encouraged to research these requirements *before* submitting an application for development.

MUNICIPAL ADVISORY COUNCILS (MAC): MAC's have been formed for the communities of Alamo, Bay Point, Bethel Island, Byron, Contra Costa Centre, Diablo, Discovery Bay, El Sobrante, Kensington, Knightsen, North Richmond, Pacheco and Rodeo. They will receive a copy of your application for their review and approval. You may wish to contact them independently in advance of submitting your application.

DISCLOSING PROJECT IMPACT ON TREES: ***Prior to accepting a development permit (e.g., subdivision, land use permit, development plan or variance) application as complete,*** the County will require the following project and tree survey information on a site plan. (Except where no exterior improvements or alterations are proposed.)

The site (grading and development) plan shall *accurately and fully disclose* the location, species, tree dripline, and trunk circumference of all trees with a trunk circumference of 20 inches *(50.8* cm; approximately 6½ inches in diameter) or greater, measured 4½ feet (1.37 m) above the ground whose tree trunks lie within 50 feet (15 m) of proposed grading, trenching, or other proposed improvements. The site plan shall include any multi-stemmed tree, the sum of whose circumferences measures 40-inches or more, measured 4½ feet from ground level.

- Trees Along Property Lines - The site plan shall include any qualifying trees whose trunks lie on adjoining property but whose canopy (dripline) extends onto the subject property.

- Numbering of Trees for Identification Purposes - If the proposed development is in proximity to two or more qualifying trees, then each tree shall be assigned a number for identification purposes (e.g., #3, #5, etc.). (Trees whose trunks are more than 50 feet removed from the proposed ground disturbance need be only denoted by the outline of the aggregate tree canopy.)

- ***Identification of Project Impact on Individual Trees -The site plan shall also specifically and clearly indicate whether individual trees are proposed to be (1) removed, or (2) altered***[1] or otherwise affected[2]. The plan shall identify any proposed drainage ditches, sewer or water mains, drainage lines or other utility improvements which would result in trenching.

  If mature trees are not shown on the site plan as proposed to be removed or altered, the County may assume that those trees are intended to be preserved without alteration, and a County development permit may be so conditioned. ***Applicants and property owners should be aware that a subsequent ministerial permit (grading or building permits, or approval of improvement plans) by the County cannot be cleared unless it is consistent with the Tree Ordinance and any applicable development or tree permit.***

- Tally of Trees to be Removed - The site plan shall contain a tally of the total number of trees proposed to be removed, and their respective aggregate trunk circumference sizes

- Project Construction Activity Near Trees - The site plan (or version thereof) shall disclose the location of any stockpiling, paving, compaction (which may be caused by maneuvering of construction vehicles), parking or storing of vehicles, equipment, machinery or construction materials, or construction trailers, or dumping of oils or chemicals which is proposed within the dripline of any above-described tree.[3]

- No Trees Near Development - If there are no qualifying trees on site (including along the site perimeter) or within 50 feet of proposed development, then that site condition shall be expressly noted on the site plan. In this circumstance, other project details specified in this form may not be needed.

- Identification of Designated Heritage Trees - Any tree that has been designated by the Board of Supervisors for "heritage" status shall be so labeled on the site plan.

Failure to fully and accurately disclose information about trees and project impacts that can reasonably be anticipated (trenching for utility lines, drainage ditches, grading, etc.) may result in:

A. ***staff determining that the application is not complete, in which case the project will not be scheduled for hearing; and/or***

B. ***subsequent interruption of development activity until such time as there is compliance with applicable tree ordinances.***

---

[1] For purposes of the Tree Ordinance, "alteration" does not necessarily mean removal of a tree branch or pruning. However, "alteration" does include any proposed trenching, grading, filling, paving, structural development, change in ground elevation within the dripline of a protected tree. Alteration also includes trim by topping (i.e., removal of the upper 25% or more of a protected tree's trunk or primary leader.)

[2] Though not required, an applicant or property owner may also choose to identify on the site plan a third classification of trees - (3) trees to be preserved (without alteration). However, any tree designated on an approved site plan for preservation, or so designated by condition of approval, automatically becomes a "protected" tree under the ordinance. No removal or (unauthorized) alteration of a protected tree is allowed without first obtaining a Tree Permit from the County.

[3] These constructionrelated activities are normally prohibited by the Tree Ordinance.

(OVER)

IMPORTANT NOTICE TO APPLICANTS & PROPERTY OWNERS

The purpose of this notice is to alert you to various issues which may affect your proposed project development. You are encouraged to research these requirements *before* submitting an application for development.

FLOODPLAIN: Your project must satisfy the requirements of the County's Floodplain Management Ordinance. If a site lies within or partially within a floodplain, flood zone information ***must*** be shown on the site plan. Before a development permit application within any area of Special Flood Hazards can be accepted as complete, the applicant or must provide verification from the Floodplain Administrator that the required Flood Zone, Base Flood Elevation and minimum finished floor elevation have been determined, Contact the Public Works Department at *925*-646-1623 to determine the flood zone of your property.

DRAINAGE IMPROVEMENTS AND ROAD IMPROVEMENTS: Your parcel may require major drainage or road improvements under County ordinances and policies. Contact the Public Works Department at *925*-313-2000 as soon as possible to determine the scope of required drainage improvements and road improvements for your project. The counter at the Public Works Department is open from 7:00 am. to Noon and 12:30 - 5:00 p.m. Monday through Thursday, and is located at 255 Glacier Dr., Martinez.

PROPOSED COMMERCIAL OR INDUSTRIAL USES: **Disclosure of Hazardous Materials** - Applications for development permits involving commercial and industrial projects, and uses where hazardous materials will be handled (in accordance with Sec. *65850.2* of the Government Code). To reduce the possibility that your application will be deemed incomplete, you are encouraged to follow the steps listed below:

- Complete a Hazardous Material Questionnaire form **and submit it to the Health Services Department, Hazardous Materials Section,** 4333 Pacheco Blvd., Martinez, CA 94553, 925-646-2286; FAX 925-646-2073. Forms may be obtained from the Application and Permit Center, Building Inspection Division, or Hazardous Materials Office They can assist you with any questions and additional materials for submittal with your development application.

Notice to Bay Area Air Quality Management District (BAAQMD) - The air permit requirements apply to all types of commercial and industrial projects, which generate direct sources of air pollution. For information regarding air permit requirements, Contact BAAQMD at 415-749-5000 or visit their website: http://www.baaqmd.gov/

Requirement for Business License - The approval of a development permit for a commercial or industrial operation ***neither satisfies nor replaces*** any County requirement to obtain a business license for the proposed use. Applicants and property owners may need to separately obtain a business license for their use. Questions on any County requirement for a business license should be directed to the County Treasurer/Tax Collector located at 625 Court Street, Martinez (925-646-4230).

FEES: **Development Application Fees** - The Community Development Division application fee schedule is structured to generally require sufficient filing fees to cover the cost of processing development applications. Where the application review costs exceed the initial deposit, applicants will be required to submit additional deposits. ***Please note that the applicant or owner is responsible for paying all application fees, whether or not the application is approved.*** For additional information about application fees or for a copy of the Application Fee Schedule, contact a Community Development representative at the Application and Permit Center 925-674-7200.

Staff Costs for Processing an Appeal are Borne by the Applicant - If an interested party files an appeal, the appeal must be accompanied by a filing fee of $125. However, please note that the County fee schedule requires the applicant to pay fees for all staff costs of processing the appeal, even if the appeal is filed by a party that opposes the project. This would include any appeal of an administrative decision.

California Department of Fish & Game Fees - An additional fee may be due at the time of posting the environmental document and prior to project decision and before permits are issued. Additional fees are based on California Department of Fish and Game Code Section 711.4, **updated annually, and effective January 1, 2012 fees are as follows:**

Categorically Exempt:	**No Additional Fee**
Negative Declaration:	**$2,101.50**
Mitigated Negative Declaration:	**2,101.50**
Environmental Impact Report:	**2,919.00**
Certified Regulatory Program	**992.50**
County Clerk Processing Fee (may apply)	**50.00**

Post-Approval Fees - Once a development permit is approved, most development still requires issuance of other types of ministerial permits (e.g., building permits, grading permits, parcel maps, etc.). Development fees and additional processing fees are normally payable at the time of the issuance of those permits. Development fees are often required for such area-wide infrastructure improvements as traffic improvements, park dedication, and child care. An estimate for many of the post-approval fees which will apply to your project may be obtained by contacting the Building Inspection Division at 925-674-7200.

APPLICANT & PROPERTY OWNER(S) VERIFICATION

I/We have read and understand the statements on this entire form; and I/we have contacted the above departments as suggested.

Applicant Signature _____ **Name:** Don Bristol **Date** 6-21-2012

Owner(s) Signature(s) _____ **Name:** RANDY H. SWENSON **Date** 6-21-2012

Office Use Only

Application File Number:

(OVER)

Attachment 4

Pless Environmental, Inc.
440 Nova Albion Way, Suite 2
San Rafael, CA 94903
(415) 492-2131 voice
(815) 572-8600 fax

January 27, 2014

Via Email

Elizabeth Klebaner
Adams Broadwell Joseph & Cardozo
601 Gateway Boulevard, Suite 1000
South San Francisco, CA 94080-7037
eklebaner@adamsbroadwell.com

Re: Review of the Phillips 66 Company Rail Spur Extension Project Public Draft Environmental Impact Report and Vertical Coastal Access Project Assessment

Dear Ms. Klebaner,

Per your request, I have reviewed the Draft Environmental Impact Report ("Draft EIR") for the Phillips 66 Company Rail Spur Extension Project ("Rail Spur Project" or "Project") published by San Luis Obispo County ("County") for review under the California Environmental Quality Act ("CEQA") in November 2013.[1]

My qualifications as an environmental expert include a doctorate in Environmental Science and Engineering from the University of California Los Angeles. I have provided expert comments on air quality in the permitting/licensing proceedings of a number of refineries and associated facilities under the federal and state Clean Air Acts and in the environmental review process under CEQA. My résumé is attached to this letter.

I. Background

Phillips 66 Company ("Phillips 66" or "Applicant") proposes to modify the existing rail spur on the southwest side of the Santa Maria Refinery ("SMR") in unincorporated San Luis Obispo County. According to the Draft EIR, the Rail Spur Project would include an eastward extension of the existing rail spur as well as a railcar

---

[1] San Luis Obispo County, Phillips 66 Company Rail Spur Extension Project Public Draft Environmental Impact Report and Vertical Coastal Access Project Assessment, November 2013, SCH # 2013071028; http://www.slocounty.ca.gov/planning/environmental/EnvironmentalNotices/railproject.htm#.

unloading facility. Trains, both unit and manifest[2], would deliver crude oil to the Santa Maria Refinery for processing. The facility would receive up to five unit trains per week (or a combined total of five unit and manifest trains), with an annual maximum of approximately 250 trains.[3] In a unit train configuration, each train would consist of three locomotives, two buffer cars, and 80 railcars carrying 23,500 gallons ("gal") each or 73 railcars carrying 30,000 gallons each depending on the car size[4], for a total of up to about 13 million barrels per year ("bpy").[5] The unloaded material would be transferred from the new unloading facility to existing crude-oil storage tanks at the SMR via a new on-site above-ground pipeline.[6]

II. The County Improperly Piecemeals the Project

The San Luis Obispo County Air Pollution Control District ("SLOCAPCD" or "District") recently approved the Final Environmental Impact Report for a ten percent increase in crude oil throughput at the Santa Maria Refinery ("SMR Throughput Increase Project"). The Draft EIR discusses the relationship between this recently approved project and the Rail Spur Project as follows:

> The Rail Spur Project would not affect the amount (throughput volume) of material processed at the refinery. Throughput levels at the refinery are capped by the County of San Luis Obispo and by the San Luis Obispo County APCD. The ability of the SMR to operate at the maximum approved throughput level is based on the existing infrastructure and is not dependent on, or related to, the Rail Spur Project. However, if and when local crude oil production (the current major source of oil for the SMR) declines, the Rail Spur Project, if approved, would allow the SMR to maintain operating up to its permitted throughput levels.
>
> The land use application for the SMR Throughput Project was submitted in 2008 and the Final EIR for the Throughput Project was certified by the County Board

ABJC-32

---

[2] According to the Draft EIR, p. 1-1, unit trains consist of approximately 80 tank cars and associated locomotives and other supporting cars that stay together as one assembly fully dedicated to delivery of crude oil to the SMR. Manifest trains may have a variety of car types and cargos, other than crude oil, that are not fully dedicated as are unit trains. Manifest trains may deliver one or more cars to the refinery and then continue to other destinations to deliver other cargo.

[3] Draft EIR, p. ES-3.

[4] Draft EIR, p. ES-4.

[5] (250 trains/year) × (80 rail cars/train) × (23,500 gal/rail car) / (42 gal/bbl) = 11,190,476 bpy; (250 trains/year) × (73 rail cars/train) × (30,000 gal/rail car) / (42 gal/bbl) = 13,035,714 bpy.

[6] Draft EIR, p. 2-1.

> of Supervisors in March of 2013, which was approximately two months before the application for the Rail Spur Project was submitted to the County. Therefore, evaluation of these projects separately would not be considered "piece-mealing" under CEQA.[7]

I disagree with the County's conclusion regarding piecemealing and find that the Rail Spur Project is too narrowly defined and is directly related to the SMR Throughput Increase Project.

Information contained in the Draft EIR makes clear that the throughput increase at the Santa Maria Refinery could not be realized but for the crude oil that would be brought in via rail; in fact, it indicates that the refinery would be unable to even continue operating at current throughput levels if the Rail Spur Project were not implemented. According to the Draft EIR, the bulk of the crude oil currently processed at the SMR (60 to 85 percent) is delivered via pipeline from offshore platforms in the Outer Continental Shelf of Santa Barbara.[8] This pipeline system is currently the only way that the SMR can receive crude oil.[9] While crude oil can be trucked to the Santa Maria Pump Station and then placed into the pipeline to the SMR, truck deliveries to the Santa Maria Pump Station are limited to a permitted maximum of 26,000 barrels per day ("bpd")[10], far below the SMR's throughput limit of 48,950 bpd sought by the SMR Throughput Increase Project.[11] Crude oil production in California has been in substantial decline for decades (47.2 percent since 1985[12]), as acknowledged by the Draft EIR.[13] The Draft EIR discloses that crude oil production in Santa Barbara County, both onshore and off-shore, has declined to 30,000 bpd.[14] Given the limitations on truck import to the Santa Maria Pump Station and the long-standing knowledge of

ABJC-32

---

[7] Draft EIR, p. ES-18.

[8] Draft EIR, pp. 2-27 and 2-30.

[9] *Ibid*.

[10] *Ibid.*

[11] Final EIR for SMR Throughput Increase EIR, p. 2-24.

[12] California Energy Commission, Transportation Energy Forecasts and Analyses for the 2011 Integrated Energy Policy Report, CEC-600-2011-007-SD, August 2011, p. 14; http://www.energy.ca.gov/2011publications/CEC-600-2011-007/CEC-600-2011-007-SD.pdf.

[13] *See* Draft EIR, p. 2-30 ("… production from offshore Santa Barbara County has been in decline for a number of years…") and p. 6-3 ("California production of crude oil per year has been in decline since 1986… The decline has averaged about 1.7% per year since 1995. More recently, the decline has averaged over 3% annually since the year 2000.)

[14] Draft EIR, p. 2-30.

a declining crude oil supply[15], particularly from the off-shore sources in the Outer Continental Shelf, long before the Applicant submitted an application for the SMR Throughput Increase Project, it is simply not believable that the Applicant would have sought an increase in throughput at the SMR without simultaneously contemplating additional ways to deliver crude oil to the facility. In fact, while the EIR for the SMR Throughput Increase Project claimed not to know "where the additional crude oil would come from that would allow the Refinery to operate at a higher throughput level,[16]" the Draft EIR for the Rail Spur Project explicitly acknowledges the effect of California's declining crude oil production:

> This declining production with the lack of ability of the refinery to source competitively priced crude oil from outside the local area generates the need for the Rail Spur Project.[17]

ABJC-32

Clearly, the Rail Spur Project is not only required to maintain current production levels but is essential to further increase the throughput at the SMR to the permit level sought under the SMR Throughput Increase Project. Thus, the SMR Throughput Increase Project and the Rail Spur Project are directly related and should have been analyzed as one project under CEQA. Because the crude switch and increase in production at the SMR were not analyzed as one project, impacts were substantially underestimated and not adequately mitigated.

What's more, the Santa Maria Refinery is linked by a 200-mile pipeline to the Applicant's refinery in Rodeo, Contra Costa County; in fact, the two facilities together are considered to be one refinery, the San Francisco Refinery.[18] The interdependency of these two facilities is laid out in detail in Dr. Fox's comments on the Draft EIR for the Phillips 66 Propane Recovery Project[19] as well as her comments on the Draft EIR for the

---

[15] *See*, for example, California Energy Commission, California Crude Oil Production and Imports, CEC-600-2006-006, April 2006, Figure 2, p. 4; http://www.energy.ca.gov/2006publications/CEC-600-2006-006/CEC-600-2006-006.PDF; and California Energy Commission, Transportation Energy Forecasts and Analyses for the 2009 Integrated Energy Policy Report, CEC-600-2010-002-SF, May 2010, p. 6; http://www.energy.ca.gov/2010publications/CEC-600-2010-002/CEC-600-2010-002-SF.PDF.

[16] Final EIR for SMR Throughput Project, p. 2-26.

[17] Draft EIR, p. 2-30.

[18] *See* Phillips 66, Western United States and Asia Refining; http://www.phillips66.com/EN/about/our-businesses/refining-marketing/refining/Pages/index.aspx. ("The San Francisco Refinery is comprised of two facilities linked by a 200-mile pipeline. The Santa Maria facility is located in Arroyo Grande, Calif., while the Rodeo facility is in the San Francisco Bay Area.")

[19] Phyllis Fox, Comments on Environmental Impact Report for the Phillips 66 Propane Recovery Project, Rodeo, California, prepared for Shute, Mihaly & Weinberger LLP on behalf of Rodeo Citizens Association

Rail Spur Project. I agree with Dr. Fox's analysis that the changes proposed at both facilities in recent years as well as the Rail Spur Project are all inextricably linked and should therefore be analyzed as one project in order to determine the full extent of their environmental impacts. (I note that both CEQA analyses for these projects relied on incorrect baselines – specifically, they relied on maximum permitted throughput as the baseline instead of actual throughput – and otherwise underestimated emissions, in part, because they failed to address emissions associated with the crude switch. Thus, the changes in emissions at the Santa Maria and Rodeo refineries resulting from to the crude switch associated with the Rail Spur Project have not been subjected to any CEQA review.) ABJC-32

III. The Draft EIR Fails to Adequately Characterize and Analyze Impacts Associated with the Crude Oil Slate Imported by the Rail Spur Project

The Draft EIR states that crude oils delivered to the SMR would be sourced from oilfields throughout North America based on market economics and other factors, with the most likely sources being the Bakken oil field in North Dakota, the mid-continent area, and Canada.[20] Beyond this generic statement, the Draft EIR contains no information regarding the crude oils that would be delivered to the SMR via rail and their chemical makeup. This scant information does not qualify as an adequate project description under CEQA.

ABJC-33

There are a wide range of traditional crude oils with different compositions currently available in commerce as well as an increasing number of unconventional crude oils, such as crudes produced in Canada from bitumen sands, so-called "oil sands" or "tar sands". Due to their widely varying physico-chemical makeup, the impacts associated with transporting, processing, and storing these various crudes can have substantially different environmental impacts including, but not limited to, air quality, greenhouse gas emissions, worker and public health risks, odors, and risks associated with accidental releases and upsets. Highly variable parameters include, for example, the crude oil's content of sulfur and toxic contaminants and whether it is blended with other chemicals such as diluent (used to make thick crudes such as Canadian tar sands less viscous and easier to transport, resulting in so-called DilBits).

November 15, 2013 http://64.166.146.155/docs/2014/BOS/20140121_330/16707_Exhibit3b-SMWletter-FoxReport.pdf.

[20] Draft EIR, pp. ES-3, 1-4, and 4.12-21.

The Draft EIR's air quality section, for example, is silent on the widely varying impacts that could be caused by the change in crude oils at the facility beyond stating that "SMR operations could change based on the availability of lighter crude oils from more distant fields (such as the Bakken Field), causing less production of coke and sulfur at the refinery. However, refinery operations stemming from delivery of crude by rail most likely would not increase the coke or sulfur production as heavier crude oils than historical Refinery feedstock would most likely not be transported to the new rail facility."[21] This simple statement does not constitute an adequate analysis of the impending change in crude oil processing at the SMR and fails to address any potential associated impacts on air quality beyond the production of coke and sulfur, such as for example, an increase in fugitive emissions when processing a lighter, more volatile crude. The Draft EIR's other environmental impact sections are similarly deficient. ABJC-33

The characteristics and composition of various crude oils and their likely origin for delivery to the SMR is laid out in well-supported detail in Dr. Fox's comments on the Draft EIR for the Rail Spur Project. I agree with Dr. Fox's findings and recommend that the County prepare a revised Draft EIR that analyzes the full range of impacts associated with the proposed switch from regional crude oils to a crude slate that would be sourced from the Bakken oilfields, the mid-continent area or Canada, including the potential for import of DilBits.

IV. The Draft EIR's Analysis of the Project's Operational Impacts on Air Quality Is Flawed and Fails to Require Adequate Mitigation

In addition to the above discussed failure to analyze the impacts of replacing the current crude slate with crudes sourced from the Bakken oil field, Canada, or mid-continent, the Draft EIR's analysis of the Project's operational impacts on air quality is substantially flawed and fails to require adequate mitigation.

A. The Draft EIR Fails to Assess the Significance of Operational Emissions Outside of San Luis Obispo County

The Draft EIR determines the significance of emissions within San Luis Obispo County based on the significance thresholds established by SLOCAPCD but makes no attempt at determining the significance of emissions outside the County's boundaries. This is not acceptable. Most of the Rail Spur Project's operational emissions would occur outside of San Luis Obispo County, as shown in Table 1 below for annual ABJC-34

[21] Draft EIR, p. 2-26.

emissions of the sum of reactive organic gases and nitrogen oxides ("ROG+NOx") as well as diesel particulate matter ("DPM").

Table 1: Annual operational emissions of ROG+NOx and DPM*

	ROG + NOx		DPM	
Area where emissions occur	(tons/year)	(percent of total)	(tons/year)	(percent of total)
Within San Luis Obispo County	71.09	6.1%	1.88**	5.7%
Within California outside of San Luis Obispo County	172.01	14.7%	4.89	14.8%
Outside of California (based on distance to Bakken oilfield)	926.20	79.2%	26.34	79.6%
Total	**1,169.30**		**33.11**	

* Emission estimates for ROG+NOx and DPM calculated from Draft EIR, Table 4.3-13.

** The Draft EIR, Table 4.3-13, incorrectly summarizes annual DPM emissions within San Luis Obispo County at 0.89 tons/year.

As shown in Table 1, more than 30 percent of annual ROG+NOx emissions and almost 15 percent of annual DPM emissions occur within California outside of San Luis Obispo County; almost 80 percent of the annual ROG+NOx emissions and DPM emissions occur outside of California. The County may not simply ignore emissions and impacts on air quality and public health that occur beyond its boundaries. The significance of emissions outside of the County can, for example, be assessed by comparing emissions to thresholds of significance established by California air districts through which the trains would travel and to General Conformity *de minimis* thresholds and taking into account the respective airsheds' attainment status. This approach has been used, for example, by the California Energy Commission ("CEC") and the U.S. Department of Energy ("DoE") in their joint analysis of the Hydrogen Energy California Project, near Bakersfield, California, which proposes to import coal from New Mexico.[22]

ABJC-34

The County should address the Rail Spur Project's impacts on air quality beyond the San Luis Obispo County line. I recommend that the County prepare a revised Draft EIR that addresses this issue.

---

[22] CEC and DoE, Preliminary Staff Assessment, Draft Environmental Impact Statement, Hydrogen Energy California Project, June 2013, CEC-700-2013-001-PSA, Docket No. 08-AFC-8A, Appendices B and C to Section Air Quality; http://docketpublic.energy.ca.gov/PublicDocuments/Delta/Delta/TN%2071444%2006-28-13%20Preliminary%20Staff%20Assessment%20-%20Draft%20Environmental%20Impact%20Statement.pdf.

B. The Draft EIR Substantially Underestimates Fugitive Emissions from Equipment Leaks

The Draft EIR provides estimates of fugitive emissions from equipment leaks associated with unit train cars, train car offloading lines, offloading collection headers and meters, drain and crude drain, and delivery to the tank farm of 6.22 lbs/day and 1.01 tons/year.[23] These emission estimates are based on the number of individual components (flanges, pressure relief valves, process drains, etc.) and emission factors published by the California Air Pollution Control Officers Association ("CAPCOA") in their *California Implementation Guidelines for Estimating Mass Emissions of Fugitive Hydrocarbon Leaks at Petroleum Facilities*[24] ("CAPCOA Report").[25] Review of the Draft EIR's emission estimates shows that it relies on incorrect emission factors and, consequently, substantially underestimates emissions from fugitive equipment leaks.

The Draft EIR's emission estimates for fugitive equipment leaks are based on emission factors for the oil and gas production industry. The Draft EIR provides no discussion whatsoever of why it deems the oil and gas production industry as applicable to the Project, when, in fact, it will be part of a refinery. The CAPCOA Report provides the following definitions for the oil and gas production and refinery industries: ABJC-35

> **Oil and Gas Production:** A facility at which crude petroleum and natural gas production and handling are conducted, as defined in the Standard Industrial Classification Manual as Industry No. 1311, Crude Petroleum and Natural Gas.
>
> **Refinery:** A facility that processes petroleum, as defined in the Standard Industrial Classification Manual as Industry No. 911, Petroleum Refining.[26]

The Standard Industrial Classification ("SIC") code No. 1311 for Crude Petroleum and Natural Gas reads as follows:

> Establishments primarily engaged in operating oil and gas field properties. Such activities may include exploration for crude petroleum and natural gas; drilling,

---

[23] *See* Draft EIR, Appx. B, p. B-4.

[24] CAPCOA, California Implementation Guidelines for Estimating Mass Emissions of Fugitive Hydrocarbon Leaks at Petroleum Facilities, February 1999; http://www.arb.ca.gov/fugitive/impl_doc.pdf.

[25] *See* Draft EIR, Appx. B, p. B-4, footnote to Table "Fugitive Emissions."

[26] CAPCOA Report, p. 35.

> completing, and equipping wells; operation of separators, emulsion breakers, desilting equipment, and field gathering lines for crude petroleum; and all other activities in the preparation of oil and gas up to the point of shipment from the producing property. This industry includes the production of oil through the mining and extraction of oil from oil shale and oil sands and the production of gas and hydrocarbon liquids through gasification, liquid faction, and pyrolysis of coal at the mine site. Also included are establishments which have complete responsibility for operating oil and gas wells for others on a contract or fee basis. Establishments primarily engaged in performing oil field services for operators on a contract or fee basis are classified in Industry Group 138.[27]

In contrast, SIC code No. 2911 defines Petroleum Refining as follows:

> Establishments primarily engaged in producing gasoline, kerosene, distillate fuel oils, residual fuel oils, and lubricants, through fractionation or straight distillation of crude oil, redistillation of unfinished petroleum derivatives, cracking or other processes. Establishments of this industry also produce aliphatic and aromatic chemicals as by-products. Establishments primarily engaged in producing natural gasoline from natural gas are classified in mining industries. Those manufacturing lubricating oils and greases by blending and compounding purchased materials are included in Industry 2992. Establishments primarily re-refining used lubricating oils are classified in Industry 2992. Establishments primarily engaged in manufacturing cyclic and acyclic organic chemicals are classified in Major Group 28.[28]

ABJC-35

Clearly, the Santa Maria Refinery is not an oil and gas production facility "primarily engaged in operating oil and gas field properties" with "activities in the preparation of oil and gas up to the point of shipment from the producing property" but instead a refinery that is "primarily engaged in producing gasoline, kerosene, distillate fuel oils, residual fuel oils, and lubricants, through fractionation or straight distillation of crude oil, redistillation of unfinished petroleum derivatives, cracking or other processes." The Rail Spur Project is part of the Santa Maria Refinery; thus, emission factors for refineries are applicable rather than those for oil and gas production facilities.

Emission factors provided in the CAPCOA Report for refineries are considerably higher than those for the oil and gas production industry. Table 2 compares daily and

---

[27] U.S. Department of Labor, Occupational Safety and Health Administration, SIC Search, 1311 Crude Petroleum and Natural Gas; https://www.osha.gov/pls/imis/sic_manual.display?id=387&tab=description.

[28] U.S. Department of Labor, Occupational Safety and Health Administration, SIC Search, 2911 Petroleum Refining; https://www.osha.gov/pls/imis/sic_manual.display?id=627&tab=description.

annual emissions as calculated by the Draft EIR based on emission factors for oil and gas production industry (CAPCOA Table IV-2c) and revised based on emission factors for refineries (CAPCOA Table IV-2a) for flanges (connectors), pressure relief valves, and pumps (pump seals) based on equipment with a component leak level below 10,000 ppm.

As shown in Table 2 on the next page, emission estimates for fugitive equipment leaks from refineries provided in the CAPCOA Report are dramatically higher than those for the oil and gas production industry. Consequently, revised daily emissions (including fugitive emissions from the carbon canisters) amount to about 150 lbs/day, about 24 times the Draft EIR's estimate of 6.2 lbs/day; revised annual emissions amount to about 27 tons/year, about 27 times the Draft EIR's estimate of 1.01 tons/year.[29] Thus, the Draft EIR substantially underestimates emissions from the Rail Spur Project.

The DEIR's reliance on an incorrect, lower emissions factor is particularly problematic here as the Applicant's intends to import Bakken crude. Bakken crude is very light and volatile and could substantially increase the fugitive leaks from existing equipment throughout the Santa Maria Refinery, which currently processes heavy crudes which are far less volatile. The effect of this crude switch on fugitive emissions from existing refinery components should have been analyzed in the Draft EIR but was not. (The switch in crude will also affect emissions from stationary sources throughout the refinery, which also haven't been analyzed.) ABJC-35

Fugitive emissions from equipment leaks consist mostly of hydrocarbons, many of which are ozone precursors, also called reactive organic gases ("ROG"). Thus, emissions from fugitive equipment leaks associated with the Rail Spur Project would contribute to existing violations of the state and federal ambient air quality standards for ozone and would impede the air basin's progress towards attainment of these standards. (Many of the fugitive compounds emitted from equipment leaks are carcinogenic and/or pose acute and chronic health risks, as discussed in more detail below.) Thus, emissions from fugitive equipment leaks would further increase the already substantial and unavoidable impacts on air quality resulting from operational emissions of the Rail Spur Project as identified by the Draft EIR. Consequently, the Draft EIR fails to inform the public of the severity of impacts associated with the Rail Spur Project.

---

[29] (149.88 lbs/day) / (6.22 lbs/day) = 24.08; (27.22 tons/year) / (1.01 tons/year) = 27.04.

Table 2: Daily and annual emission rates from fugitive equipment leaks as estimated by the Draft EIR using emission factors for oil and gas production (CAPCOA Table IV-2c) and revised based on emission factors for refineries (CAPCOA Table IV-2a)

Process/ System	Source Unit	No. of Proposed Components	Draft EIR Emission Factor (Oil & Gas) (kg/hr/comp)	Draft EIR Daily Emission Rate (lb/day)	Draft EIR Annual Emission Rate (tons/yr)	Revised Emission Factor (Refinery) (kg/hr/comp)	Revised Daily Emission Rate (lb/day)	Revised Annual Emission Rate (tons/yr)
Unit Train Cars	Flanges (ANSI 16.5-1988)	80	2.40E-05	1.01E-01		6.00E-05	2.53E-01	
	Pressure Relief Valves	20	1.90E-05	2.01E-02		4.47E-02	4.72E+01	
			Total Emissions:	**0.12**	**0.022**		**47.46**	**8.661**
Train Cars Offloading Lines	Pumps -Double Mechanical Seals or Equivalent Seals	20	2.65E-04	2.80E-01		1.20E-02	1.27E+01	
	Flanges (ANSI 16.5-1988)	820	2.40E-05	1.04E+00		6.00E-05	2.60E+00	
	Pressure Relief Valves	20	1.90E-05	2.01E-02		4.47E-02	4.72E+01	
	Process Drains with P-Trap or Seal Pot	20	1.31E-04	1.38E-01		1.31E-04	1.38E-01	
	Other (including fittings, hatches, sight-glasses, and meters)	200	1.31E-04	1.38E+00		1.31E-04	1.38E+00	
			Total Emissions:	**2.86**	**0.52**		**63.99**	**11.68**
Offloading Collection Headers & Meters	Pumps -Double Mechanical Seals or Equivalent Seals	2	2.65E-04	2.80E-02		1.20E-02	1.27E+00	
	Flanges (ANSI 16.5-1988)	380	2.40E-05	4.82E-01		6.00E-05	1.20E+00	
	Pressure Relief Valves	10	1.90E-05	1.00E-02		4.47E-02	2.36E+01	
	Process Drains with P-Trap or Seal Pot	20	1.31E-04	1.38E-01		1.31E-04	1.38E-01	
	Other (including fittings, hatches, sight-glasses, and meters)	30	1.31E-04	2.08E-01		1.31E-04	2.08E-01	
	Total Emissions:			**0.87**	**0.16**		**26.42**	**4.82**
Drain & Crude Drain	Flanges (ANSI 16.5-1988)	83	2.40E-05	1.05E-01		6.00E-05	2.63E-01	
	Pressure Relief Valves	3	1.90E-05	3.01E-03		4.47E-02	7.08E+00	
			Total Emissions:	**0.11**	**0.020**		**7.34**	**1.340**
Delivery to Tank Farm	Flanges (ANSI 16.5-1988)	21	2.40E-05	2.66E-02		6.00E-05	6.65E-02	
	Pressure Relief Valves	1	1.90E-05	1.00E-03		4.47E-02	2.36E+00	
			Total Emissions:	**0.03**	**0.0050**		**2.43**	**0.4429**
Unloading Carbon Canisters		1		2.24	0.28		2.24	0.28
			TOTAL FUGITIVE EMISSIONS	**6.22**	**1.01**		**149.88**	**27.22**

ABJC-35

C. The Draft EIR Improperly Defers Analysis of Mitigation Measures and Fails to Identify all Feasible Mitigation Measures to Reduce Significant Impacts on Air Quality

The Draft EIR finds that the Project's operational emissions would substantially exceed the SLOCAPCD's thresholds of significance for ROG and NOx and diesel particulate matter. Specifically, the Project would result in unmitigated emissions of about 870 lbs/day and 71 tons/year of ROG+NOx[30], *i.e.*, about 35 times the District's daily significance threshold of 25 lbs and about three times the annual significance threshold of 25 tons.[31] The above discussed ROG emissions from fugitive equipment leaks further increase Project emissions to more than 40 times the District's daily significance threshold and about four times the District's annual significance threshold.[32] The Project would also result in emissions of about 34 lbs/day of diesel particulate matter[33], *i.e.*, 27 times the District's significance threshold of 1.25 lbs/day.[34]

The Draft EIR finds that reducing idling time would reduce emissions of ROG+NOx by about 25 lbs/day and 3 tons/year,[35] still far above the District's significance thresholds. To further reduce ROG and NOx emissions from the locomotives, the Draft EIR proposes Mitigation Measure AQ-2a: ABJC-36

> Prior to issuance of Notice to Proceed, the Applicant shall investigate methods for reducing the onsite emissions, both from fugitive components and from locomotives. In addition, locomotive emissions shall be mitigated to the extent feasible through the contracting arrangement that increase the use of Tier 1 and better locomotives. If emissions of ROG+NOx with the above mitigations still exceed the thresholds, the Applicant shall secure SLOCAPCD-approved off-site reductions in ROG + NOx emissions to ensure that project-related ROG + NOx emissions within SLO County do not exceed the SLOCAPCD thresholds for the life of the project. Coordination with the SLOCAPCD should begin at least six (6) months prior to issuance of the Notice to Proceed for the Project to allow time

---

[30] Draft EIR, Table 4.3-13, p. 4.3-44.

[31] (869.85 lbs/day) / (25 lbs/day) = 34.79; (71.09 tons/year)/(25 tons/year) = 2.84.

[32] ((149.8 lbs/day) + (869.85 lbs/day) – (6.22 lbs/day))/ (25 lbs/day) = 40.54;
((27.22 tons/year) + (71.09 tons/year) – (1.01 tons/year)/ (25 tons/year) = 3.89.

[33] *Ibid.*

[34] (33.90 lbs/day) / (1.25 lbs/day) = 27.12.

[35] Draft EIR, p. 4.3-45.

> for refining calculations and for the SLOCAPCD to review and approve the off-site mitigation approach.

To further reduce diesel particulate matter emissions from the locomotives, the Draft EIR proposes Mitigation Measure AQ-3:

> Prior to issuance of the Notice to Proceed, the Applicant shall investigate methods for reducing the locomotive emissions through the contracting arrangement that increase the use of Tier 1 and better locomotives. If emissions of diesel particulate with the above mitigations still exceed the thresholds, the Applicant shall secure SLOCAPCD-approved off-site reductions in particulate matter emissions to ensure that project-related diesel particulate emissions within SLO County do not exceed the SLOCAPCD thresholds for the life of the project. Coordination with the SLOCAPCD should begin at least six (6) months prior to issuance of operational permits for the Project to allow time for refining calculations and for the SLOCAPCD to review and approve the off-site mitigation approach.

Both proposed mitigation measures impermissibly defer analysis of their adequacy without providing specific performance standards capable of mitigating the Project's impacts to below significance. Further, the proposed mitigation measures are not stringent enough. The County should investigate the potential for on-site emission reductions before resorting to off-site mitigation, which typically means offsets, *i.e.*, the purchase of credits for emission reductions that occurred somewhere else in the past. On-site mitigation could *e.g.*, include installation of additional, more efficient control technologies on existing units at the Santa Maria Refinery and the Santa Maria Pump Station such as, *e.g.*, vapor recovery units, replacement of leaking components, installation of leakless components, installation of low NOx burners or replacement of older, high-emitting equipment. ABJC-36

In addition, the County must require use of best available control technology ("BACT") for unloading emissions from the rail cars. The Draft EIR proposes to use carbon canisters with a removal efficiency of at least 95 percent.[36] This does not constitute BACT. First of all, carbon adsorption does not uniformly remove the same percentage of all pollutants; some compounds adsorb more readily than others. Therefore, carbon canisters are specified depending on the application and composition of the vapors that need to be controlled. Manufacturers will specify a removal efficiency for specific compounds at a certain concentration in the vapor and a certain air flow. Further, carbon canisters, which are not regenerative, have a high removal efficiency

---

[36] Draft EIR, pp. 4.3-42 and 4.3-51.

until saturation when the effluent concentration will suddenly increase, a behavior known as "breakthrough." Thus carbon canisters must be closely and continually monitored. The Draft EIR does not indicate any such monitoring. More efficient systems than carbon canisters are available for rail terminals including, for example, vapor recovery units ("VRUs") with two sets of carbon beds that can be alternately regenerated and are monitored by continuous emissions monitoring systems ("CEMS"). According to one manufacturer, John Zink: "In typical installations such as truck, rail, tank and marine loading, our VRUs achieve emission control efficiencies of 99% or better.[37] The County should require an analysis of all feasible vapor removal systems and require installation of a BACT-compliant system. This analysis must include an evaluation of the various crude oils that could be imported to the facility under the Rail Spur Project. ABJC-36

To mitigate the impacts caused by diesel particulate matter emissions from locomotives, the County should mandate that all locomotives associated with the Rail Spur Project (*i.e.*, loaded trains hauling crude oil to the terminal and empty trains traveling back to oil fields) meet Tier 3 or 4 emission standards established by the U.S. Environmental Protection Agency ("EPA"). This would achieve a 50 percent or 90 percent reduction in diesel particulate matter emissions, respectively, compared to older Tier 0 and Tier 1 locomotives.

V. The Draft EIR's Health Risk Assessment for Project Operational Emissions Is Substantially Flawed and Fails to Identify Significant Cancer Risks

The Draft EIR recognizes that operational activities associated with the Rail Spur Project would result in emissions of toxic air contaminants ("TACs") from fugitive emissions sources (*e.g.*, valves, pumps, and vapor recovery canisters) and diesel exhaust from locomotive engines.[38] The Draft EIR's health risk assessment estimates excess cancer risks at the Santa Maria Refinery parcel boundary immediately south of the rail spur location of up to 78.1 in one million at the Point of Maximum Impact ("PMI") and the highest excess cancer risk at a residential or sensitive receptor parcel boundary of 9.7 in one million.[39] The Draft EIR concludes that because excess cancer risk at the residential receptor would be below the SLOCAPCD's significance threshold of 10 in ABJC-37

---

[37] *See*, for example, John Zink, Carbon Adsorption Vapor Recovery Systems; http://www.johnzink.com/wp-content/uploads/carbon-adsorption-vapor.pdf.

[38] Draft EIR, p. 4.3-47.

[39] Draft EIR, p. 4.3-48.

one million, the health risk impacts would be less than significant.[40] The Draft EIR's analysis is substantially flawed and fails to identify significant health risks.

First, the SLOCAPCD defined the cancer risk threshold at 10 in one million, not 10.0 in one million.[41] Thus, any cancer risk estimates that are compared to this threshold should be rounded to the nearest whole number; in this case, 9.7 in one million rounded to the nearest whole number is 10 in one million. Thus, cancer risks are significant compared with the SLOACPD's threshold of significance.

Second, as discussed above, the Draft EIR improperly piecemeals the Rail Spur Project, which should be analyzed together with the SMR Throughput Increase Project. The District estimated excess cancer risks associated with the SMR Throughput Increase Project at 2.1 in one million at the fenceline for emissions from stationary sources and 5.9 in one million immediately south of the Santa Maria Refinery along area roadways for diesel exhaust emissions.[42] While these cancer risk estimates are not directly additive to the excess cancer risks from the Rail Spur Project of 9.7 in one million because they do not occur at the same location, based on a comparison of the cancer risk isopleths provided in the Final EIR for the SMR Throughput Increase Project's stationary and mobile sources and in the Draft EIR for locomotives (*see* Figures 1 and 2 below), combined cancer risks would exceed the SLOCAPCD's significance threshold of 10 in one million.

ABJC-37

---

[40] *Ibid*.

[41] *See*, SLOCAPCD, CEQA Air Quality Handbook, A Guide for Assessing the Air Quality Impacts for Projects Subject to CEQA Review, April 2012, p. 3-7; ("The APCD has defined the excess cancer risk significance threshold at **10 in a Million**…"; **emphasis** retained.) http://www.slocleanair.org/images/cms/upload/files/CEQA_Handbook_2012_v1.pdf. ("The APCD has defined the excess cancer risk significance threshold at **10 in a Million**…"); **emphasis** retained.)

[42] Final EIR for SMR Throughput Increase, p. 4.1-48.

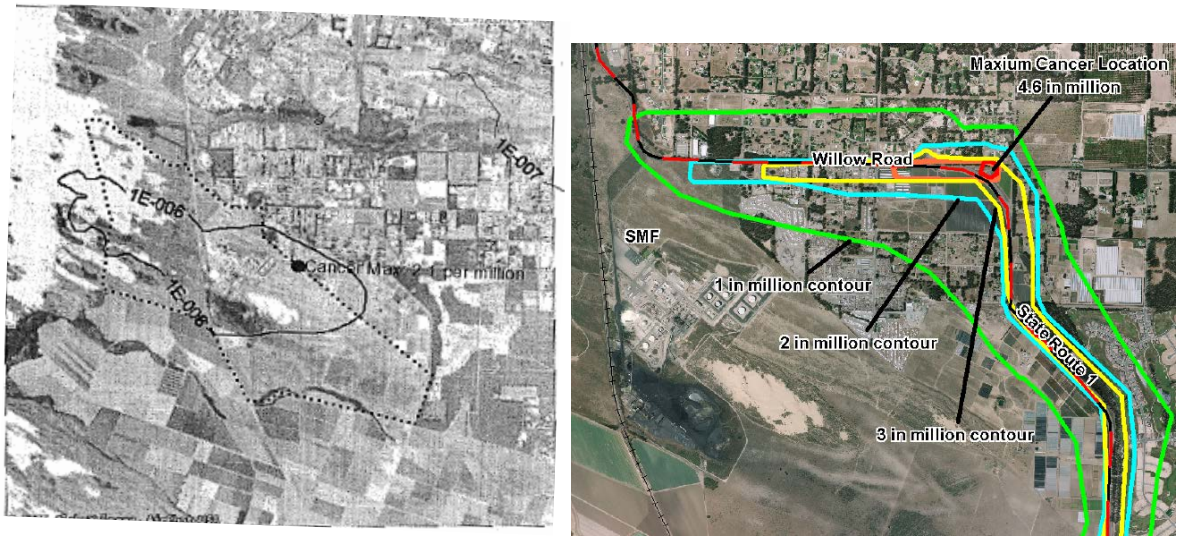

Figure 1: Cancer risk isopleths for TAC emissions from stationary sources (left) and diesel exhaust emissions from mobile sources (right) associated with the SMR Throughput Increase Project
(from: Draft EIR for SMR Throughput Increase Project, Appx. A, p. A-55 (left), and Final EIR for SMR Throughput Increase Project, p. 4.1-26 (right))

ABJC-37

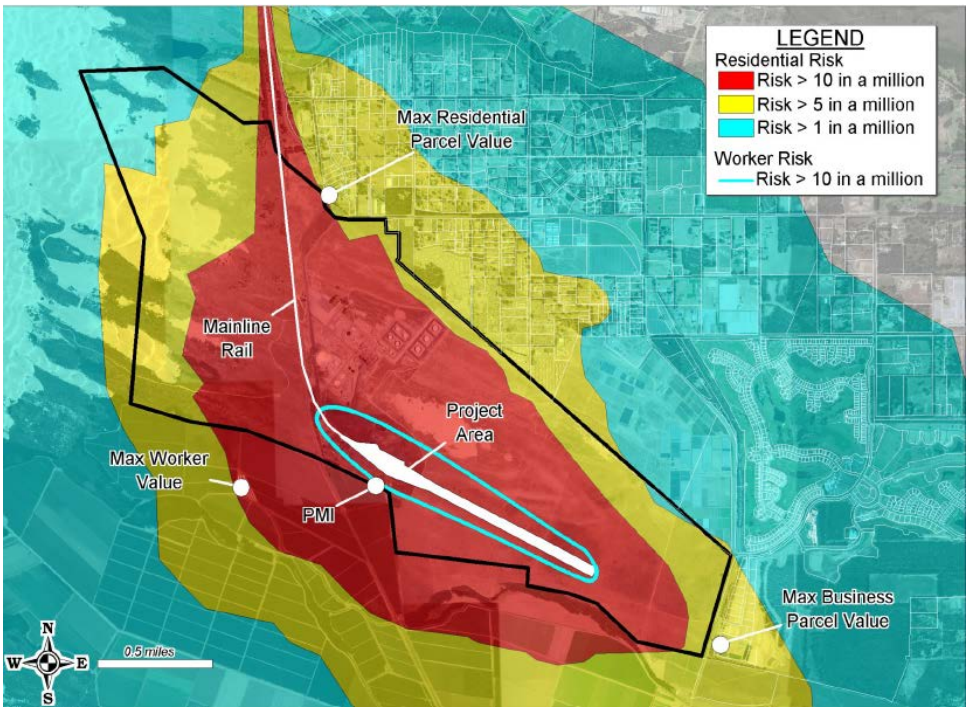

Figure 2: Cancer risk isopleths for diesel exhaust emissions from locomotives associated with the Rail Spur Project
(from: Draft EIR, p. 4.3-39)

Specifically, at the residential receptor, where the Rail Spur Project would result in excess cancer risks of 9.7 in one million, excess cancer risks resulting from mobile sources associated with the SMR Throughput Increase Project (Figure 1 (right)) exceed one in one million. Thus, combined excess cancer risk for an adult residential receptor exceeds the SLOCAPCD's significance threshold of 10 in one million. Excess cancer risks from stationary sources from the SMR Throughput Increase Project (Figure 1 (left)) further contribute to this exceedance of the cancer risk threshold. This is a significant impact that was not identified in the Draft EIR because it improperly piecemeals these project. Further, because the SMR Throughput Increase Project improperly relied upon the permitted crude oil throughput as the baseline, rather than actual crude oil throughput, it substantially underestimated potential cancer risks. Thus, cancer risks are even higher than discussed.

Third, the Health Risk Assessment determined the incremental cancer risk at the nearest residence, the maximally exposed individual ("MEI"), only for an adult receptor[43] without adjustment for increased risk during the first 16 years of life, during which a large fraction of lifetime (70-year) cancer risk is incurred. To address the higher risk of early-in-life exposure, California's Office of Environmental Health Hazard Assessment ("OEHHA") and EPA recommend the use of age-dependent adjustment factors, or age sensitivity factors, to account for the higher risks during early stages of life. Specifically, OEHHA recommends: ABJC-37

> In order to address the issue of early-in life exposures, OEHHA has adopted a policy, based on the available scientific data, of weighting cancer risk from exposures from the third trimester to <2 yrs of age by a factor of ten, and exposures from age two to less than sixteen years by a factor of three. In addition to innate sensitivities to some carcinogens, children have greater exposures due to physiological and behavioral factors. As a result, a greater proportion of total lifetime risk is accrued by age 16 with lifetime exposure to a constant air concentration than was previously recognized.[44]

EPA recommends the same age-dependent adjustment factors.[45] Because children are potentially present at residential locations, age-dependent excess cancer risk must be

---

[43] *See* Draft EIR, Appx. B, p. B-10, "Cancer Risk Calculation."

[44] OEHHA, Air Toxics Hot Spots Program Risk Assessment Guidelines, Technical Support Document for Exposure Assessment and Stochastic Analysis, Final, August 2012 (hereafter OEHHA Technical Support Document"), pp. 11-2 (internal citations omitted); http://oehha.ca.gov/air/hot_spots/pdf/2012tsd/TSDportfolio2012.pdf.

[45] EPA, Cancer Risk Calculations; http://www.epa.gov/oswer/riskassessment/sghandbook/riskcalcs.htm.

evaluated. The results of including age sensitivity factors in a health risk assessment are commonly referred to as "child cancer risk."

I calculated the excess child cancer risk based on the adult cancer risk of 9.71 in one million for a 70-year exposure provided in the Draft EIR[46], as shown in Table 3.

Table 3: Child cancer risk for diesel particulate matter emissions from Rail Spur Project accounting for age sensitivity factors

Risk Year	Period (years)	Age Sensitivity Factor	Excess Child Cancer Risk*
3rd trimester	0.3	10	3.78E-01
1	1	10	1.26E+00
2-15	14	3	5.30E+00
16-70	55	1	6.93E+00
		Σ cancer risk child:	**1.39E+01**
Exceeds 10 in one million significance threshold?			**YES**

* Calculated as: (adult cancer risk 9.71E-06) / (70 years) × (period in years) × (age sensitivity factor)

As shown in Table 3, excess child cancer risk resulting from emissions associated with the Rail Spur Project's locomotive diesel exhaust alone, 13.9 in one million, would clearly exceed the SLOCAPCD's significance threshold of 10 in one million even without adding the emissions from the SMR Throughput Increase Project. This is a significant impact that the Draft EIR fails to identify. ABJC-37

Fourth, Draft EIR states, without any quantitative analysis, that TAC emissions from fugitive sources associated with the Rail Spur Project would be minimal and would not contribute to the overall risk levels.[47] I disagree. As discussed above, the Draft EIR substantially underestimates emissions from fugitive equipment leaks. Given that the estimated cancer risk at the residential receptor of 9.7 in one million from diesel particulate matter emissions alone is close to the significance threshold, even a small contribution from fugitive emissions to the incremental cancer risk would likely result in significant impacts. Crude oil vapors contain various amounts of toxic air contaminants including the contaminants benzene, which is a carcinogen, toluene, ethylbenzene, and xylene, in sum known as "BTEX." DilBits, synthetic crudes and Bakken crude oils contain high amounts of BTEX. The BTEX content in diluent ranges from 27,000 ppm to 60,900 ppm; and the BTEX content in DilBits, blended from these materials, ranges from 8,000 ppm to 12,300 ppm. Similarly, the BTEX in synthetic crude

---

[46] Draft EIR, Appx. B, p. B-10, "Cancer Risk Calculation."

[47] Draft EIR, p. 4.3-47.

oils ranges from 6,100 ppm to 14,100 ppm.[48] These very high concentrations in the crude oils result in very high concentrations in crude vapor that would be emitted from equipment leaks and the carbon canisters and could result in significant public health impacts. The Draft EIR must be revised to assess carcinogenic emissions from fugitive equipment leaks.

Fifth, the Draft EIR does not analyze the potential increase in health impacts resulting from the switch in crude oils, which could be substantial, *e.g.*, due to higher concentrations in carcinogenic compounds such as, *e.g.*, benzene.

ABJC-37

Sixth, the Draft EIR fails to provide a cumulative health risk assessment. CEQA requires analysis of the environmental impacts of past, present, and reasonably foreseeable projects. For an assessment of health risks, these past, present, and reasonably foreseeable projects must include emissions from the existing Santa Maria Refinery (including the recently approved SMR Throughput Increase Project if not considered part of the Project) as well as the cumulative projects identified by the Draft EIR[49] such as the Phillips 66 Removal of Soil and Debris Mound Project, the Phillips 66 Pipeline Project, and the Freeport McMoRan Oil & Gas Oil Field Expansion.[50]

VI. The Draft EIR's Odor Analysis Is Deficient

The Draft EIR recognizes that operation of the Rail Spur Project could result in potential odor impacts, including from fugitive emissions of hydrocarbons and hydrogen sulfide ("H_2S") from equipment leaks and the vapor recovery carbon canisters and from diesel exhaust emissions from the locomotives.[51] The Draft EIR's odor analysis and proposed mitigation for these emission sources is deficient, as discussed below.

ABJC-38

First, while the Draft EIR recognizes diesel exhaust emissions from the locomotives as potential odor sources, it fails entirely to provide a discussion, let alone a quantitative analysis, of associated odor impacts. The odor of diesel exhaust is considered by most people to be objectionable and EPA found that, at high intensities, diesel exhaust may produce sufficient physiological and psychological effects to

---

[48] For a detailed discussion, *see* Dr. Fox's comments on the Draft EIR.

[49] *See* Draft EIR, Table 3.1, pp. 3-4 through 3-8.

[50] Draft EIR, p. 3-4.

[51] Draft EIR, p. 4.3-51.

warrant concern for public health.[52] Clouds of soot from diesel-powered engines, such as the Project's locomotives when in transit or idling, can travel downwind for miles and drift into heavily populated areas.[53] Here, trains with two to three locomotives would pass directly by numerous densely populated residential neighborhoods en route from the Bakken or Canadian oilfields to the SMR which could cause odor nuisance for receptors located within these neighborhoods. Thus, the County should provide a revised Draft EIR that evaluates the potential for odors from locomotive diesel exhaust.

Second, in addition to H_2S, crude oils contain various amounts of other odiferous sulfur compounds, including mercaptans, which are known for their very strong and unpleasant odors. The odor threshold for most mercaptans is considerably less than 0.5 parts per billion ("ppb"); some mercaptans can be detected at concentrations as low as 0.029 ppb.[54] In fact, mercaptans are added to natural gas in very tiny amounts so that the gas can be smelled to facilitate detecting leaks. Information available for Canadian crudes indicates that diluents can contain more than 100 ppm of volatile mercaptans.[55] The Draft EIR should be revised to analyze potential odor impacts resulting from odiferous sulfur compounds contained in the fugitive emissions from equipment leaks. ABJC-38

Third, the Draft EIR's odor analysis estimates that fugitive crude oil vapor emissions from equipment leaks could produce H_2S levels at the nearby property line of up to 1.7 ppb and less than 1 ppb at residences. (Because the Draft EIR fails to provide the SCREEN3 modeling runs, it fails to support these estimates. Further, the Draft EIR fails to identify the location of the residential receptor.) Based on a H_2S odor limit of 2 ppb with a significant impact being assigned to levels that could exceed the 50 percent odor threshold at 1 ppb, the Draft EIR finds that fugitive emissions could cause odor impacts offsite and odor emissions would be potentially significant. As mitigation for this potential significant odor impact, the Draft EIR requires Mitigation Measure AQ-6:

> The Applicant shall ensure that any new odor sources be added to the existing Refinery Odor Control Plan and submitted to the SLOCAPCD for review and comment before the start of construction. If H_2S levels from fugitive components

---

[52] EPA, Health Assessment Document for Diesel Engine Exhaust, EPA/600/8-90/057F, May 2002; http://www.epa.gov/ttn/atw/dieselfinal.pdf.

[53] Union of Concerned Scientists, Digging Up Trouble, The Health Risk of Construction Pollution in California, November 2006; http://www.ucsusa.org/assets/documents/clean_vehicles/digging-up-trouble.pdf.

[54] Syneco Systems, Inc., Odor Perception, 2009; http://www.synecosystems.com/wp/PDF/151.pdf.

[55] crudemonitor.ca, 2014; http://www.crudemonitor.ca/home.php.

> at the unloading area are determined by the SLOCAPCD to present potential offsite odor issues, measures to implement to reduce odors from the unloading area fugitive components shall include leak detection (if not already implemented), lower leak detection and repair threshold limits (to 100-500 ppm) and/or increased monitoring frequency (monthly) and these measures shall be added to the Odor Control Plan.

This mitigation measure is inadequate for several reasons: a) it negates the Draft EIR's finding of potential significant odor impacts at the property boundary by requiring re-analysis by the SLOCAPCD; and b) it improperly defers analysis of the adequacy of the proposed mitigation measure, which is not permitted under CEQA. The proposed measures including leak detection and lower leak detection and repair thresholds and/or increased monitoring frequency, which are all feasible and routinely required elsewhere, must be required to reduce the significant odor impacts. In addition to the proposed leak detection program, the County should analyze the use of leakless components (*e.g.*, welded connectors, bellows valves, double mechanical seals with high pressure fluids on pumps, enclosed distance pieces on compressors with venting to a control device, etc.) wherever feasible to prevent, rather than detect, odor impacts. Construction of the Rail Spur Project with leakless components is feasible and should be required. ABJC-38

Fourth, the Draft EIR analyzed only equipment leaks from new components associated with the Rail Spur Project; yet, it entirely failed to analyze odor impacts resulting from the change in crude oil slate at the existing SMR including the tank farm. The crude oil brought in by rail could be considerably more odiferous than the crude currently processed. Given that the nearest receptor is located only 425 feet northeast and the closest residence is only 1,200 feet northeast of the crude oil storage tanks[56], it is likely that change in crudes may affect these receptors.

I recommend that the County provide a revised and recirculated Draft EIR that includes modeling of all odorous compounds including diesel exhaust, hydrocarbons, and sulfurous compounds, including mercaptans, to adequately assess potential odor impacts associated with the Rail Spur Project. The revised Draft EIR should evaluate potential odor impacts for the full range of crude oils that could be delivered to the Santa Maria Refinery including heavy Canadian sour crude oil, DilBits, and Bakken crude oil and require adequate mitigation including, for example, the use of leakless components.

---

[56] Draft EIR, p. 4.7-37.

VII. The Draft EIR Fails to Identify Significant Impacts Associated with Emissions of Greenhouse Gases

The Draft EIR presents estimates for greenhouse gas ("GHG") emissions from construction, on- and off-site locomotives, electricity, and other offsite sources resulting from construction and operation of the Rail Spur Project.[57] Specifically, the Draft EIR estimates emissions of 5,533 metric tonnes of carbon dioxide-equivalent ("MT CO_2e") within San Luis Obispo County; 14,179 MT CO_2e within California; and 65,908 MT CO_2e within the United States.[58] The Draft EIR finds that total GHG emissions within San Luis Obispo County would not exceed the SLOCAPCD thresholds of significance and would therefore not result in a significant impact.[59] I disagree with this conclusion for several reasons.

First, greenhouse gases are not local or regional pollutants but contribute cumulatively to global climate change. Therefore, emissions associated with the Rail Spur Project cannot be myopically assessed by counting only emissions that occur within the County boundary. According to the Draft EIR, more than 90 percent of the GHG emissions associated with the Rail Spur Project would occur outside of San Luis Obispo County.[60] These GHG emissions, whose significance is not assessed in any other environmental document, would occur as a consequence of the Rail Spur Project and must therefore be included in the determination of significance. The SLOCAPCD, *i.e.*, the agency who developed the GHG thresholds of significance upon which the Draft EIR relies, recognized in its Final EIR for the SMR Throughput Increase Project that all GHG emissions, including those occurring outside of San Luis Obispo County (*e.g.*, locomotives traveling to Long Beach in Los Angeles County and heavy-duty trucks traveling to and from Kern, Santa Barbara, Monterey, Ventura, and Los Angeles Counties) must be included in the total emissions tally that is compared to the GHG significance threshold.[61] (The Final EIR for the SMR Throughput Increase Project requires mitigation for the project's significant GHG emissions for both on-site stationary sources and off-site mobile sources.[62]) Here, total GHG emissions associated with the Rail Spur Project, 65,908 MT CO_2e, would by far exceed the SLOCAPCD's

ABJC-39

---

[57] Draft EIR, Table 4.3-15, p. 4.3-50.

[58] Draft EIR, p. 4.3-50.

[59] *Ibid*.

[60] (1) - (5,533 MT CO_2e)/(65,908 MT CO_2e) = 0.916.

[61] *See*, Final EIR SMR Throughput Project, Tables 4.1-9, 4.1-15, and 4.1-18 and p. 4.1-45.

[62] *See*, Final EIR SMR Throughput Project, Mitigation Measure AQ-3, p. 4.1-46.

stationary source threshold of 10,000 MT CO_2e. This is a significant impact that the Draft EIR fails to identify and mitigate.

Second, as discussed above, the Rail Spur Project is part of a larger refinery-wide project that includes the SMR Throughput Increase Project. Thus, total GHG emissions from these projects must be quantified and compared to applicable significance thresholds. The Final EIR for the SMR Throughput Increase Project estimated a total increase of GHG emissions of 20,470 MT CO_2e over the baseline. (However, it should be noted that this estimate is too low because the Final EIR assumed an incorrect baseline of maximum permitted rather than actual throughput at the facility.) Thus, total emissions from the SMR when implementing both projects would be at least 86,378 MT CO_2e.

The SLOCAPCD's CEQA Guidelines provide a long list of mitigation measures to reduce emission of greenhouse gases from projects including industrial projects. In addition, the CAPCOA has published guidance for quantifying greenhouse mitigation measures.[63] Many of the mitigation measures mentioned in these documents are feasible for the Rail Spur Project and should be required to reduce its significant GHG emissions.[64] I recommend that the County evaluate and require all feasible mitigation to reduce significant impacts with respect to global climate change due to GHG emissions associated with the proposed operational changes at the SMR including the Rail Spur Project and the SMR Throughput Increase Project. ABJC-39

VIII. The Draft EIR Fails Analyze Potentially Significant Health Impacts Due to Valley Fever and Fails to Require Adequate Mitigation

ABJC-40

Valley Fever, or coccidioidomycosis (short cocci), is an infectious disease caused by inhaling the spores of *Coccidioides ssp.*[65], a soil-dwelling fungus. Spores, or arthroconidia, are released into the air when infected soils are disturbed, *e.g.*, by

---

[63] CAPCOA, Quantifying Greenhouse Gas Mitigation Measures, A Resource for Local Government to Assess Emission Reductions from Greenhouse Gas Mitigation Measures, August, 2010; http://www.capcoa.org/wp-content/uploads/2010/11/CAPCOA-Quantification-Report-9-14-Final.pdf.

[64] SLOCAPCD, CEQA Air Quality Handbook, A Guide for Assessing the Air Quality Impacts for Projects Subject to CEQA Review, April 2012, Table 3-5 Mitigation Measures, pp. 3-17 through 3-20; http://www.slocleanair.org/images/cms/upload/files/CEQA_Handbook_2012_v1.pdf.

[65] Two species of *Coccidioides* are known to cause Valley Fever: *C. immitis*, which is typically found in California, and *C. posadasii*, which is typically found outside California. *See* Center for Disease Control, Coccidioidomycosis (Valley Fever), Information for Health Professionals; http://www.cdc.gov/fungal/coccidioidomycosis/health-professionals.html.

construction activities, agricultural operations, dust storms, or during earthquakes. The disease is endemic (native and common) in the semiarid regions of the southwestern United States. San Luis Obispo County, including the Project site, is located within the established endemic range of Valley Fever, as shown in Figure 3 below, and the disease has become an increasing concern for health officials in San Luis Obispo County.[66]

ABJC-40

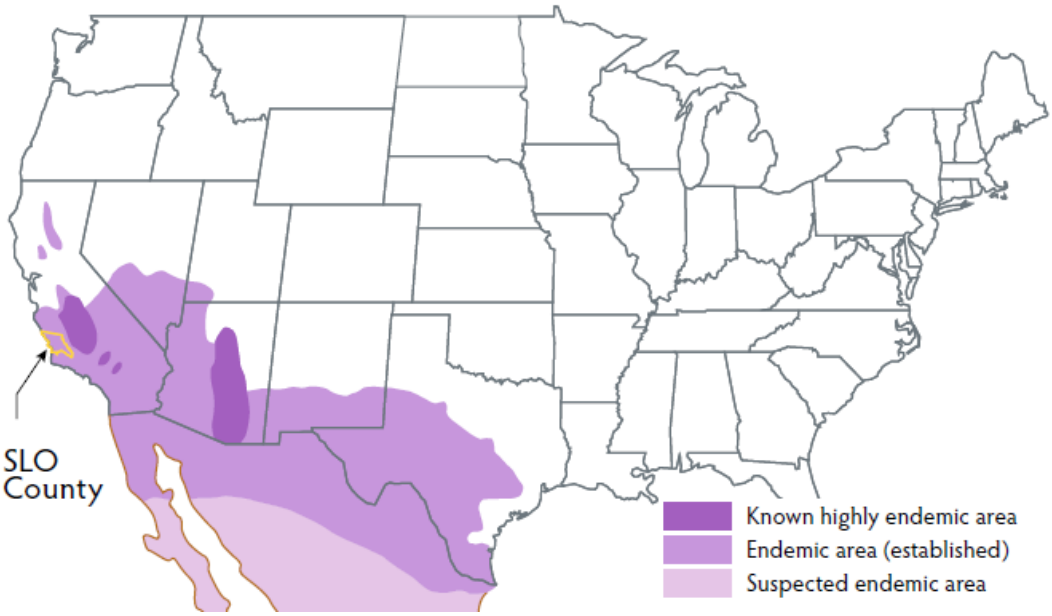

Figure 3: Endemic areas for Valley Fever in the U.S.
(from: San Luis Obispo County Public Health Department, What Is Valley Fever? July 20, 2011; http://www.slocounty.ca.gov/Assets/PH/Epidemiology/ValleyFever_Info.pdf)

Typical symptoms of Valley Fever include fatigue, fever, cough, headache, shortness of breath, rash, muscle aches, and joint pain. Symptoms of advanced Valley Fever include chronic pneumonia, meningitis, skin lesions, and bone or joint infections. The most common clinical presentation of Valley Fever is a self-limited acute or subacute community-acquired pneumonia that becomes evident 13 weeks after

[66] San Luis Obispo County Public Health Department, What Is Valley Fever? July 20, 2011; http://www.slocounty.ca.gov/Assets/PH/Epidemiology/ValleyFever_Info.pdf.

infection.[67] No vaccine or known cure exists for the disease.[68] Between 1990 and 2008, more than 3,000 people have died in the United States from Valley Fever with about half in California.[69] In recent years, reported Valley Fever cases in the Southwest have increased dramatically.[70] Cases of Valley Fever in San Luis Obispo County have more than doubled over the past few years from 87 reported cases in 2009 to 225 cases in 2011. [71] In 2013, San Luis Obispo County experienced two major outbreaks at construction sites for solar facilities.[72]

The Draft EIR makes no mention whatsoever of the potential health risks posed by Valley Fever from construction and/or operation of the Rail Spur Project and does not require any mitigation to limit the public's or workers' potential exposure to cocci. Thus, the Draft EIR utterly fails to inform the public of the significant consequences of Project construction and feedstock production. This failure violates CEQA. As a result, the Draft EIR must be amended to provide this significant new information, requiring recirculation for public review. ABJC-40

At-risk Populations

Dust exposure is one of the primary risk factors for contracting Valley Fever.[73] Specific occupations and outdoor activities associated with dust generation such as

---

[67] *See, e.g.*, Lisa Valdivia, David Nix, Mark Wright, Elizabeth Lindberg, Timothy Fagan, Donald Lieberman, Prien Stoffer, Neil M. Ampel, and John N. Galgiani, Coccidioidomycosis as a Common Cause of Community-acquired Pneumonia, Emerging Infectious Diseases, v. 12, no. 6, June 2006; http://europepmc.org/articles/PMC3373055.

[68] Rebecca Plevin, National Public Radio, Cases Of Mysterious Valley Fever Rise In American Southwest, May 13, 2013; http://www.npr.org/blogs/health/2013/05/13/181880987/cases-of-mysterious-valley-fever-rise-in-american-southwest.

[69] Jennifer Y. Huang, Benjamin Bristow, Shira Shafir, and Frank Sorvillo, Coccidioidomycosis-associated Deaths, United States, 1990–2008; http://www.ncbi.nlm.nih.gov/pmc/articles/PMC3559166/.

[70] *See* Center for Disease Control; Fungal Pneumonia: A Silent Epidemic, Coccidioidomycosis (Valley Fever); http://www.cdc.gov/fungal/pdf/cocci-fact-sheet-sw-us-508c.pdf.

[71] Cal Coast News, Valley Fever Outbreak Strikes Solar Power Plant Workers, May 1, 2013; http://calcoastnews.com/2013/05/valley-fever-outbreak-strikes-solar-power-plant-workers/.

[72] Julie Cart, Los Angeles Times, Officials Study Valley Fever Outbreak at Solar Power Projects, April 30, 2013; http://articles.latimes.com/2013/apr/30/local/la-me-solar-fever-20130501.

[73] Rafael Laniado-Laborin, Expanding Understanding of Epidemiology of Coccidioidomycosis in the Western Hemisphere, Ann. N.Y. Acad. Sci., v. 111, 2007, pp. 20-22; Frederick S. Fisher, Mark W. Bultman, Suzanne M. Johnson, Demosthenes Pappagianis, and Erik Zaborsky, Coccidioides Niches and Habitat Parameters in the Southwestern United States, a Matter of Scale, Ann. N.Y. Acad. Sci., No. 1111, 2007, pp. 47-72 ("All of the examined soil locations are noteworthy as generally 50% of the individuals who were exposed to the dust or were excavating dirt at the sites were infected.");

construction, farming, road work, military training, gardening, hiking, camping, bicycling, or fossil collecting increase the risk of exposure and infection. The risk appears to be more specifically associated with the amount of time spent outdoors than with doing specific activities.[74] The most at-risk populations are construction and agricultural workers,[75] the very populations that would be directly exposed by the Project. A refereed journal article on occupational exposures notes that "[l]abor groups where occupation involves close contact with the soil are at greater risk, especially if the work involves dusty digging operations."[76] One study reported that at study sites, "generally 50% of the individuals who were exposed to the dust or were excavating dirt at the sites were infected."[77]

ABJC-40

The disease debilitates the population and thus prevents them from working.[78] The longest period of disability from occupational exposure in California is to construction workers, with 62% of the reported cases resulting in over 60 days of lost work.[79] Another study estimated the average hospital stay for each (non-construction work) case of coccidioidomycosis at 35 days.[80] Further, the potentially exposed population is much larger than construction and agricultural workers because the non-selective raising of dust during Project construction will carry the very small spores –

---

http://www.researchgate.net/publication/6461426_Coccidioides_niches_and_habitat_parameters_in_the_southwestern_United_States_a_matter_of_scale/file/72e7e51c9b9f058a45.pdf?origin=publication_detail.

[74] *See* Center for Disease Control, Coccidioidomycosis (Valley Fever); http://www.cdc.gov/fungal/coccidioidomycosis/, accessed August 21, 2013; and Kern County Public Health Services Department, Valley Fever (Coccidioidomycosis) in Kern County; http://kerncountyvalleyfever.com/.

[75] Lawrence L. Schmelzer and R. Tabershaw, Exposure Factors in Occupational Coccidioidomycosis, Am. J. Public Health Nations Health, v. 58, no. 1, 1968, pp. 107-113, Table 3; http://www.ncbi.nlm.nih.gov/pmc/articles/PMC1228046/?page=1

[76] *Ibid*, p. 110.

[77] Fisher et al., 2007.

[78] Frank E. Swatek, Ecology of *Coccidioides Immitis*, Mycopathologia et Mycologia Applicata, V. 40, Nos. 1-2, pp. 3-12, 1970.

[79] Schmelzer and Tabershaw, 1968, Table 4.

[80] Demosthenes Pappagianis and Hans Einstein, Tempest from Tehachapi Takes Toll or Coccidioides Conveyed Aloft and Afar, West J. Med., v. 129, Dec. 1978, pp. 527-530; http://www.ncbi.nlm.nih.gov/pmc/articles/PMC1238466/pdf/westjmed00256-0079.pdf.

0.002-0.005 millimeters ("mm") (*see* Figure 4) – into non-endemic areas, potentially exposing large non-Project-related populations.[81,82]

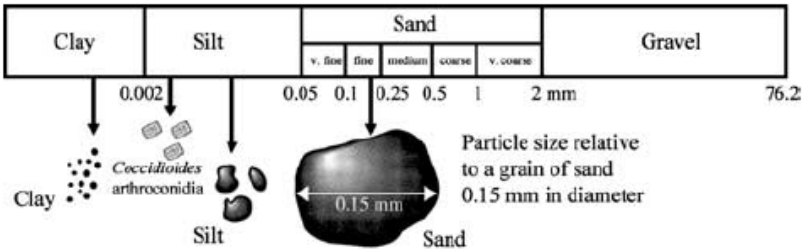

Figure 4: Size of cocci spores compared to soil particles (in mm)
(from: Fisher et al., 2007, Fig. 3)

Valley Fever spores have been documented to travel as much as 500 miles[83] and, thus, dust raised during construction could potentially expose a large number of people hundreds of miles away. ABJC-40

"Hispanics, Asians, and Native Americans are often considered to suffer from Valley Fever with the worst symptoms more often than Caucasians."[84] The most recent California Department of Public Health report indicates that Hispanics accounted for more than a quarter of all reported cases statewide in 2012, the last year for which data was recorded.[85] One study speculated that "[t]he use of transient farm laborers in the San Joaquin Valley and the gradual westward movement in the U.S.A. has produced a steady supply of susceptible individuals."[86] The 2010 Census indicates that 20.8% of the population is Hispanic in San Luis Obispo County; Hispanics are therefore likely to be present in the work force.[87]

---

[81] Schmelzer and Tabershaw, 1968, p. 110; Pappagianis and Einstein, 1978.

[82] Pappagianis and Einstein, 1978, p. 527 ("The northern areas were not directly affected by the ground level windstorm that had struck Kern County but the dust was lifted to several thousand feet elevation and, borne on high currents, the soil and arthrospores along with some moisture were gently deposited on sidewalks and automobiles as "a mud storm" that vexed the residents of much of California." The storm originating in Kern County, for example, had major impacts in the San Francisco Bay Area and Sacramento).

[83] David Filip and Sharon Filip, Valley Fever Epidemic, Golden Phoenix Books, 2008, p. 24.

[84] Filip and Filip, 2008, p. 29.

[85] California Department of Public Health, Coccidioidomycosis Yearly Summary 2012, p. 4; available at http://www.cdph.ca.gov/programs/sss/Documents/COCCI-UPDATED2012YEARLY.pdf.

[86] Swatek, 1970, p. 5.

[87] California Demographics by Cubit, San Luis Obispo County Demographics Summary; available at http://www.california-demographics.com/san-luis-obispo-county-demographics.

Other risk factors include diabetes, malnutrition and socioeconomic status. "Even the risk of 'socioeconomic status' with an annual income below $15,000 was seen to be a risk factor for the most serious Valley Fever conditions. This finding may be due to any number of reasons, from increased likelihood to work in dusty environments where high doses of spores could be inhaled, to a lack of ability to pay for medical care and thus only visiting doctors when symptoms are at their worst."[88] San Luis Obispo County has a poverty rate of 12.9%,[89] again indicating a high proportion of sensitive populations.

The Draft EIR fails to inform the public of the potential significant consequences of Project construction and fails to address the associated environmental justice issues. The County should amend and recirculate the Draft EIR to provide an adequate assessment of Valley Fever and propose adequate mitigation.

A Conventional Dust Control Plan Is Inadequate to Address Potential Health Risks Posed by Exposure to Valley Fever

ABJC-40

Conventional dust control measures that would be included in the mitigation measures for the Rail Spur Project pursuant to SLOCAPCD's CEQA Guidelines[90] are not effective at controlling Valley Fever[91] as they largely focus on visible dust. While dust exposure is one of the primary risk factors for contracting Valley Fever and dust-control measures are an important defense against infection, it is important to note that visible dust is only an indicator that *Coccidioides ssp.* spores may be airborne in a given area. Freshly generated dust clouds usually contain a larger proportion of the more visible coarse particles. However, these larger particles settle more rapidly and the remaining fine respirable particles may be difficult to see.

Spores of *Coccidioides ssp.* have slow settling rates in air due to their small size (2 to 5 micrometers), low terminal velocity, and possibly also due to their buoyancy, barrel shape and commonly attached empty hyphae cell fragments.[92] Thus spores,

---

[88] Filip and Filip, 2008, pp. 33, 37.

[89] California Demographics by Cubit, 2013; http://www.california-demographics.com/.

[90] Draft EIR, Mitigation Measure AQ-1f, p. 4.3-38.

[91] *See, e.g.*, Cummings and others, 2010, p. 509; Schneider et al., 1997, p. 908 ("Primary prevention strategies (*e.g.*, dust-control measures) for coccidioidomycosis in endemic areas have limited effectiveness.").

[92] Frederick S. Fisher, Mark W. Bultman, and Demosthenes Pappagianis, Operational Guidelines (version 1.0) for Geological Fieldwork in Areas Endemic for Coccidioidomycosis (Valley Fever),

whose size is well below the limits of human vision, may be present in air that appears relatively clear and dust free. Such ambient, airborne spores with their low settling rates can remain aloft for long periods and be carried hundreds of kilometers from their point of origin. Thus, implementation of dust control measures only when visible dust is present will not provide sufficient protection for both site workers and the general public.

Further, infections by *Coccidioides ssp.* frequently have a seasonal pattern with infection rates that generally spike in the first few weeks of hot dry weather that follow extended milder rainy periods. In California, infection rates are generally higher during the hot summer months especially if weather patterns bring the usual winter rains between November and April.[93] The majority of cases of Valley Fever accordingly occur during the months of June through December. Typically, the risk of catching Valley Fever begins to increase in June and continues an upward trend until it peaks during the months of August, September and October.[94] Drought periods can have an especially potent impact on Valley Fever if they follow periods of rain.[95] It is thought that during drought years the number of organisms competing with *Coccidioides ssp.* decreases and the fungus remains alive but dormant. When rain finally occurs, the arthroconidia germinate and multiply more than usual because of a decreased number of other competing organisms. When the soil dries out in the summer and fall, the spores can become airborne and potentially infectious.[96] The current drought conditions in California, officially declared as a State of Emergency by Governor Brown on January 17, 2013[97], may well increase the occurrence of Valley Fever cases. Thus, major onsite and offsite soil-disturbing construction activities should be timed to occur outside of a prolonged dry period. After soil-disturbing activities conclude, all

ABJC-40

U.S. Geological Survey Open-File Report 00-348, 2000; http://geopubs.wr.usgs.gov/open-file/of00-348/of00-348.pdf.

[93] *Ibid*.

[94] Kern County Public Health Services Department, What Is Valley Fever, Prevention, Valley Fever Risk Factors; http://kerncountyvalleyfever.com/what-is-valley-fever/risk-factors/.

[95] Gosia Wozniacka, Associated Press, Fever Hits Thousands in Parched West Farm Region, May 5, 2013, citing Prof. John Galgiani, Director of the Valley Fever Center for Excellence at the University of Arizona; http://abcnews.go.com/m/story?id=19113795.

[96] Theodore N. Kirkland and Joshua Fierer, Coccidioidomycosis: A Reemerging Infectious Disease, Emerging Infectious Diseases, Vol. 3, No. 2, July-September 1996; http://www.ncbi.nlm.nih.gov/pmc/articles/PMC2626789/pdf/8903229.pdf.

[97] State of California, Office of Governor Edmund G. Brown, Governor Brown Declares Drought State of Emergency, January 17, 2013; http://gov.ca.gov/home.php.

disturbed soils should be sufficiently stabilized to prevent air-borne dispersal of cocci spores.

Recommended Measures to Reduce Risk of Valley Fever

In response to an outbreak of Valley Fever in construction workers in 2007 at a construction site for a solar facility within its jurisdiction, the County's Public Health Department in conjunction with the California Department of Public Health developed recommendations to limit exposure to Valley Fever based on scientific information from the published literature. The recommended measures go far beyond the conventional dust control measures recommended in the Draft EIR for the Rail Spur Project:

1. *Implement comprehensive Injury and Illness Prevention Program (required by Title 8, Section 3203) ensuring safeguards to prevent Valley Fever are included.*
2. *Work with a medical professional with expertise in cocci to develop a training program for all employees discussing the following issues: potential presence of C. immites in soils; the risks involved with inhaling spores; how to recognize common symptoms (which resemble common viral infections, and may include fatigue, cough, chest pain, fever, rash, headache, and body and joint ache); requesting prompt reporting of suspected symptoms to a supervisor and health care provider; discussing worker entitlement to receive prompt medical care if they suspect symptoms of work-related Valley Fever; and requesting the use of personal protection measures as outlined below.*
3. *Control exposure to dust:*
   - Consult with local Air Pollution Control District Compliance Assistance programs and with California Occupational Safety and Health Administration ("Cal/OSHA") compliance program regarding meeting the requirements of dust control plans and for specific methods of dust control. These methods may include wetting the soil while ensuring that the wetting process does not raise dust or adversely affect the construction process.
   - Provide high-efficiency particulate ("HEP")-filtered, air-conditioned enclosed cabs on heavy equipment. Train workers on proper use of cabs, such as turning on air conditioning prior to using the equipment.
   - Provide communication methods, such as 2-way radios, for use in enclosed cabs.
   - Provide National Institute for Occupational Safety and Health ("NIOSH")-approved respirators for workers without a prior history of Valley Fever.
   - Half-face respirators equipped with N-100 or P-100 filters should be used during digging. Employees should wear respirators when working near earth moving machinery.

ABJC-40

- Employees should be medically evaluated, fit-tested, and properly trained on the use of the respirators, and a full respiratory protection program in accordance with the applicable Cal/OSHA Respiratory Protection Standard (8 CCR 5144) should be in place.
- Prohibit eating and smoking at the worksite, and provide separate, clean eating areas with hand-washing facilities.
- Avoid outdoor construction operations during unusually windy conditions.
- Consider limiting outdoor construction during the fall to essential jobs only, as the risk of cocci infection is higher during this season.

4. *Prevent transport of cocci outside endemic areas:*
   - Thoroughly clean equipment, vehicles, and other items before they are moved off-site to other work locations.
   - Provide workers with coveralls daily, lockers (or other system for keeping work and street clothing and shoes separate), daily changing and showering facilities.
   - Clothing should be changed after work every day, preferably at the work site.
   - Train workers to recognize that cocci may be transported offsite on contaminated equipment, clothing, and shoes; alternatively, consider installing boot-washing.
   - Post warnings onsite and consider limiting access to visitors, especially those without adequate training and respiratory protection.

5. *Improve medical surveillance for employees*
   - Employees should have prompt access to medical care, including suspected work-related illnesses and injuries.
   - Work with a medical professional to develop a protocol to medically evaluate employees who have symptoms of Valley Fever.
   - Consider preferentially contracting with 1-2 clinics in the area and communicate with the health care providers in those clinics to ensure that providers are aware that Valley Fever has been reported in the area. This will increase the likelihood that ill workers will receive prompt, proper and consistent medical care.
   - Respirator clearance should include medical evaluation for all new employees, annual re-evaluation for changes in medical status, and annual training, and fit-testing.

ABJC-40

- Please note that skin testing is not recommended for evaluation of Valley Fever.
- If an employee is diagnosed with Valley Fever, a physician must determine if the employee should be taken off work, when they may return to work, and what type of work activities they may perform.[98]

Two other studies have developed complementary recommendations to minimize the incidence of Valley Fever. The U.S. Geological Survey ("USGS") has developed recommendations to protect geological field workers in endemic areas.[99] An occupational study of Valley Fever in California workers also developed recommendations to protect those working and living in endemic areas.[100] These two sources identified the following measures, in addition to those identified by the County's Public Health Department, to minimize exposure to Valley Fever:

- Pretest soils to determine if each work location is within an endemic area.
- Implement a vigorous program of medical surveillance.
- Implement aggressive enforcement of respiratory use where exposures from manual digging are involved. ABJC-40
- Test all potential employees for previous infection to identify the immune population and assign immune workers to operations involving known heavy exposures.
- Hire resident labor whenever available, particularly for heavy dust exposure work.
- All workers in endemic areas should use dust masks to protect against inhalation of particles as small as 0.4 microns. Mustaches or beards may prevent a mask from making an airtight seal against the fact and thus should be discouraged.
- Establish a medical program, including skin tests on all new employees, retesting of susceptibles, prompt treatment of respiratory illness in susceptibles; periodic medical examination or interview to discover a history of low grade or subclinical infection, including repeated skin testing of susceptibles.

---

[98] San Luis Obispo County Health Agency, Recommendations for Workers to Prevent Infection by Valley Fever in SLO County; http://www.slocounty.ca.gov/Assets/PH/Epidemiology/Cocci+Recomendations.pdf.

[99] Fisher et al. 2000.

[100] Schmelzer and Tabershaw, 1968, pp. 111 - 113.

All of the above health-protective measures recommended by the County's Public Health Department are feasible for the Rail Spur Project and must be required in an enhanced dust control plan to reduce the risk for construction workers, on-site employees and the public of contracting Valley Fever. Even if all the above measures are adopted, a recirculated Draft EIR is required to analyze whether these measures are adequate to reduce this significant impact to a level below significance. ABJC-40

IX. The Draft EIR Fails to Adequately Analyze Hazards Associated with the Rail Spur Project

The Draft EIR's Hazards and Hazardous Materials section analyzes two sets of impacts: a) on-site release of hazardous materials resulting from crude oil unloading through pipeline transports to the SMR's storage tanks; and b) accidents related to crude oil rail transport. The Draft EIR provides an extensive, 55-page discussion of the applicable regulatory framework and general methodologies to analyze these types of impacts; yet, the Draft EIR's presentation of impacts (a mere 7.5 pages including three full pages of tables and graphs) is impenetrable and inaccessible to a typical reviewer and its conclusions are not adequately supported (in some cases, not supported at all). As such, the Draft EIR does not fulfill its duty as an informational document under CEQA. Further, as explained below, the Draft EIR's analysis of hazards is substantially flawed and fails to identify significant impacts. ABJC-41

My comments below incorporate and/or summarize some of Dr. Fox's comments regarding hazards on the Draft EIR for the Rail Spur Project.

A. The Draft EIR Fails to Analyze Hazards Based on the Various Types of Crude Oils that Could Be Imported Under the Rail Spur Project

The Draft EIR recognizes that the properties of crude oils affect the severity of safety impacts such as oil spills, toxic exposure, and fires.[101] For example, the gravity of crude oils determines whether oils sink or swim when released to water; the crude's vapor pressure determines its volatility and how much vapor will be released into the air; and the crude's composition (various hydrocarbons, hydrogen sulfide, acids, etc.) affect its flammability, toxicity, corrosivity; and so forth. Yet, while the Draft EIR goes to great lengths to describe all other factors that may affect the impacts of various release scenarios (*e.g.*, population density (the number of persons present at each location, the area over which the persons are distributed, and the maximum number of persons that ABJC-42

[101] Draft EIR, p. 4.7-2.

could be exposed); ignition probability (identifying any ignition sources between the release location and the receptors); shielding factor (buildings, vegetation terrain, and other types of obstruction that would shield receptors from exposure); two stability scenarios for meteorological conditions; pipe friction effects; failure probabilities for various equipment; earthquake probabilities; etc.[102]), it does not include a description of the physico-chemical characteristics of the various crude oils that could be imported by the Rail Spur Project.

The Draft EIR claims that its analyses of fire risks were based on "a detailed analyses of a typical crude oil that would be delivered via rail" and provides one data point, *i.e.*, a burning rate[103] of 0.288 millimeters per second ("mm/s") for light crude oil. Yet, the Draft EIR does not supply this "detailed analysis" nor does it identify or further characterize this light crude oil. The Draft EIR is silent as to whether crude composition was considered in any of its other analyses of risks. ABJC-42

As discussed in detail in Dr. Fox's comments on the Draft EIR, the Rail Spur Project may result in a variety of crude oils being imported to the Santa Maria Refinery, including light, highly volatile crude oil from the Bakken oilfield in North Dakota and heavy Canadian crudes including DilBits/tar sands. Due to their wide range of physico-chemical properties, the import of these crudes is associated with widely varying risks, some of which have not been addressed by the Draft EIR at all (*e.g.*, corrosion of the SMR's existing refinery components, increases in fugitive ROG emissions).
I recommend that the County revise the Draft EIR to include proper identification of the crude oils that may be imported (including material safety data sheets) and provide revised risk analyses based on this information.

B. The Draft EIR Improperly Limits the Study Area and Scope of the Analysis

The Draft EIR provides a public safety analysis for the study area that "includes the rail corridors in San Luis Obispo County associated with the Rail Spur Project, the existing facilities and pipelines, alternatives, and the areas in the immediate vicinity of the Rail Spur Project that could be affected by an upset at the unloading facilities."[104] In other words, the Draft EIR's analysis excludes the analysis of impacts from transporting ABJC-43

---

[102] *See* Draft EIR, pp. 4.7-5 *et seq*.

[103] The burning rate is a measure of the linear combustion rate of a compound or substance such as a candle or a solid propellant and is measured in length over time. Among the variables affecting the burning- rate are pressure and temperature.

[104] Draft EIR, pp. 4.7-2 and 4.7-3.

crude oil thousands of miles from Northern American oilfields across uncounted sensitive habitats and water resources and through densely populated areas such as Sacramento and the San Francisco Bay Area. This is not acceptable.

The Draft EIR does not include a map showing the route trains would take to the Santa Maria Refinery outside of San Luis Obispo County. However, it discloses that it would contract with Union Pacific Railroad ("UPPR")[105] and provides a map showing rail lines UPPR operates in California.[106] The Draft EIR suggests that unit trains would most likely enter California from the north, follow the rail line along the Sacramento River to Roseville, through Sacramento, Oakland, Santa Clara, San Jose, and along the UPRR coastal line to the Santa Maria Refinery. (Elsewhere, the Draft EIR indicates that trains could also arrive from the south[107], in which case they may pass through the densely populated Los Angeles area. The Draft EIR contains no analysis of this scenario.)

Transportation of crudes along these routes would run parallel to the Sacramento River and through the Sacramento-San Joaquin River Delta and could have disastrous consequences for the water supply for much of California. They also parallel the Pacific Coast, passing through sensitive lands under the jurisdiction of the Coastal Commission. Spills along this segment could result in significant impacts to sensitive coastal resources, including biota and the ocean itself. ABJC-43

The routes would also go through some of the most densely populated areas of California including the Sacramento metropolitan area, the San Francisco Bay Area and Silicon Valley. An accident within these areas could result in large numbers of injuries and fatalities. The Draft EIR is silent on impacts due to accidents outside of San Luis Obispo County and does not provide a discussion of potential alternate routes that stay clear of major population centers, sensitive habitat, nor minimize impacts to water resources.

C. The Draft EIR Fails to Identify Significant Risks with Respect to Injury or Loss of Life

ABJC-44

The Draft EIR goes on for dozens of pages describing various accident scenarios, minutia of the risk assessment methodology, input parameters for modeling,

---

[105] For example, Draft EIR, pp. ES-17 and 4.12-7.

[106] Draft EIR, Figure 4.12-2.

[107] Draft EIR, p. 2-21.

significance thresholds, etc.; yet, its discussion of the modeling results consists only of the following two paragraphs:

> Several crude oil spill scenarios were modeled to evaluate worst-case thermal radiation hazards associated with a large crude oil fire. Modeled scenarios ranged from small releases from a tank car, to the complete instantaneous loss of containment of a rail car contents. An explosion of a tank car, simulated as a Boiling Liquid Expanding Vapor Explosion (BLEVE), was also evaluated (see Appendix H for modeling input data and results). Worst-case thermal radiation injury levels would extend approximately 800 meters from the pool fire that could result from a catastrophic pipeline failure on the refinery site. Based on this modeling, it was determined that there would not be any potential for offsite injuries associated with worst-case unloading facility crude oil spill and fire. Therefore, potential hazards associated with the unloading facility are considered less than significant.[108]
>
> As with the refinery spill analysis, several crude oil spill scenarios were modeled to evaluate worst-case thermal radiation hazards associated with a large crude oil fire. Modeled scenarios ranged from small releases from a tank car, to the complete instantaneous loss of containment of a rail car contents. An explosion of a tank car, simulated as a Boiling Liquid Expanding Vapor Explosion (BLEVE), was also evaluated (see Appendix H for modeling input data and results). Worst-case thermal radiation injury levels would extend approximately 500 meters from a pool fire and/or tank car explosion.[109]

ABJC-44

This discussion is entirely inadequate, and its conclusion of no significant impacts is erroneous, as discussed below.

First, the Draft EIR provides no discussion of the meaning of "worst-case thermal radiation injury levels" at 800 and 500 meters, respectively; fails to translate the results into units of measure that the general public reading the Draft EIR would be familiar with, *i.e.*, feet, rather than meters; and fails to relate these result to the distance to any potential receptors to support its conclusion of no significant impacts. Further, the Draft EIR makes no attempt whatsoever to translate the modeling results contained in Appendix H into a format that is understandable to the general public. Mere reference to results contained in an appendix that is indecipherable to the general public, unsupported, and, what's more, shows inputs and results in metric units of measure and scientific notation with which most readers will be unfamiliar, does not constitute

---

[108] Draft EIR, p. 4.5-57.

[109] Draft EIR, p. 4.7-58.

an adequate analysis under CEQA. The Draft EIR might as well be written in Greek and is therefore inadequate as an informational document under CEQA.

Second, the Draft EIR's statements and conclusions are incorrect, misleading and incomplete and fail to inform the public about the consequences of the Rail Spur Project:

For example, the Draft EIR states that "[w]orst-case thermal radiation injury levels would extend approximately 800 meters from the pool fire that could result from a catastrophic pipeline failure on the refinery site" and determines, based on this modeling, "that there would not be any potential for offsite injuries associated with worst-case unloading facility crude oil spill and fire."[110] Review of the modeling results in Appendix H for the crude pipeline accident analysis for pool fires[111], the significance criteria established by the Draft EIR, and comparison to the distance to the nearest potential receptors shows that the Draft EIR's conclusion of no potential for offsite injuries is incorrect.

ABJC-44

Impacts due to pool fires resulting from a catastrophic release from a pipeline are determined as heat flux, *i.e.*, the thermal radiation intensity that would result in injury. Heat flux is measured in kilowatts per square meters ("kW/m^2"). The Draft EIR's states that "serious injuries would start to be realized at and above 5 kW/m^2… Exposure to thermal radiation levels in excess of 10 kW/m^2 would likely begin to generate fatalities in less than 1 minute. All persons exposed to thermal radiation within the flame area were assumed to suffer fatalities regardless of exposure duration."[112] Table 4 summarizes the distances from a pool fire resulting from a 110,000 cubic meter ("m^3") (692,000 bbl) release of crude oil from a pipeline accident at wind speeds of 1 and 20 meters per second ("m/s") (about 2 and 45 miles per hour ("mph"), respectively) where a heat flux of 5, 10 and 12.5 kw/m^2 would occur. Table 4 shows the distance in both feet and meters (for comparison with the Draft EIR's discussion).

---

[110] Draft EIR, p. 4.7-57.

[111] Draft EIR, Appx. H, pp. H-14 though H-18.

[112] Draft EIR, p. 4.7-19.

Table 4: Crude pipeline accident pool fire modeling results
(from: Draft EIR, Appx. H)

	Heat Flux		
	5 kW/m²	10 kW/m²	12.5 kW/m²
Wind Speed	**Impact Distance (feet)**		
1 m/s	1,647	889	764
20 m/s	2,640	1,555	1,273
	Impact Distance (meters)		
1 m/s	502	271	233
20 m/s	805	474	388

As shown in Table 4, serious injuries (≥5 kW/m²) would occur at distances of about 1,650 feet at wind speeds of 1 m/s and about 2,650 feet at wind speeds of 20 m/s. Fatalities (≥ 10 kW/m²) could occur at distances of about 900 feet at wind speeds of 1 m/s and about 1,600 feet for wind speeds of 20 m/s. Certain death would occur at distances of about 800 feet at wind speeds of 1 m/s and of about 1,300 feet at wind speeds of 20 m/s. The nearest potentially affected receptors are located considerably closer than any of these distances. For example, off-site workers can be present less than 50 feet from the tank farm in the industrial area to the east of the Santa Maria Refinery, the most likely, but not the only or closest, area where a catastrophic release would occur. Thus, workers could be seriously injured or even killed by a catastrophic release from a pipeline accident. The same is true for agricultural workers in the surrounding fields. Residential receptors are also located within modeled impact distances. For example, a residential property at Winterhaven Way to the north is located less than 2,500 feet from the tank farm. Thus, injuries from a pipeline accident cannot be ruled out at this residence. Further, injuries from a catastrophic accident could be experienced by recreational users of the Oceano Dunes State Vehicular Recreation Area and Oso Flakes Lake and Dunes as well as riders on trains passing through the SMR property to the west. In sum, the Draft EIR's finding of no significant impacts is contradicted by evidence in its own modeling reports. Serious injuries or deaths could occur from release of crude oil from pipelines at the Santa Maria Refinery. Thus, the Draft EIR fails to identify significant impacts on off-site receptors including death and serious injury. Further, the Draft EIR is silent on potential injuries and/or deaths for on-site workers, the population most affected by accidents on site.

ABJC-44

The Draft EIR's analyses of risks due to releases of crude oil from on-site train accidents are similarly flawed, as laid out in detail in Dr. Fox's comments. I recommend that the County provide a revised Draft EIR for recirculation that addresses these serious impacts to health and safety.

D. The Draft EIR Fails to Address the Potential of Terrorist Attacks on Rail Transports

The Draft EIR states that while the Rail Spur Project could be subject to vandalism that could release hazardous materials, it would not be considered a terrorist target compared to New York City or Washington.[113] Here, the Draft EIR only looks at the terminal but entirely ignores the potential for terrorist attacks on trains in transit transporting crude oil through long stretches of sensitive habitat, along much of California's water supply and through densely populated areas. Freight trains are an easy target, as they are operated by a very small crew and are frequently left unattended. For example, the recent tragic crude oil rail accident in Lake Mégantic in Canada, which resulted in 47 fatalities in a town of 6,000, occurred while the train operator left the train unattended.[114] Given the worldwide awareness raised by the recent slate of catastrophic train derailments and accidents, it may be only a matter of time that trains in transit carrying crude oil will become the target for a terrorist attack or vandalism with disastrous consequences. ABJC-45

E. The Draft EIR Fails to Require Safer Rail Cars to Mitigate Significant Impacts Associated with the Rail Spur Project's Crude Oil Transport

Due to its substantially flawed analyses and erroneous findings of no significant impacts, the Draft EIR does not require any mitigation for risk associated with crude oil accidents. As demonstrated above and in Dr. Fox's comments on the Draft EIR, the Draft EIR's analyses are substantially flawed and fail to identify and require mitigation for risks associated with rail transport and unloading of crude oils to/at the Santa Maria Refinery. Available mitigation includes the exclusive use of railcars specified to Department of Transportation standards exceeding those of the current fleet of rail cars. Because rail cars transporting crude oils are most often owned by the refineries' owners – *e.g.*, Phillips 66 recently acquired 2000 rail cars[115] - the County is not preempted from requiring the most up-to-date and safest rail cars available. For an excellent discussion of the various rail car standards available, *see* Dr. Fox's comments on the Draft EIR. ABJC-46

---

[113] Draft EIR, p. 4.7-6.

[114] *See*, for example, Wikipedia, Lac-Mégantic Derailment; http://en.wikipedia.org/wiki/Lac-M%C3%A9gantic_derailment.

[115] 2013 Barclays CEO Energy-Power Conference, Greg Garland, Chairman and CEO, Phillips 66, September 12, 2013 Transcript, p. 7; http://www.phillips66.com/EN/investor/presentations_ccalls/Documents/Barclays_091213_Final.pdf.

X. Recommendation

Based on the above discussion, I find that the Draft EIR for the Rail Spur Project is substantially deficient as an informational document under CEQA and recommend that the County prepare and recirculate a revised Draft EIR that addresses the issues outlined above.

In addition to the above discussed issues, there are a number of other issues including, but not limited to problems with the Draft EIR's air quality, odor, and risk modeling, that I did not have adequate time to address. I may submit comments on these specific issues later.

Please feel free to call me at (415) 492-2131 or e-mail at petra@ppless.com if you have any questions or if you require a copy of any document cited in this letter.

Best regards,

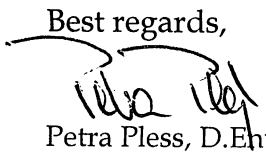

Petra Pless, D.Env.

Petra Pless, D.Env.

440 Nova Albion Way, #2
San Rafael, CA 94903
(415) 492-2131 phone
(815) 572-8600 fax
petra.pless@gmail.com

Dr. Pless is a court-recognized expert with over 20 years of experience in environmental consulting conducting and managing interdisciplinary environmental research projects and preparing and reviewing environmental permits and other documents for U.S. and European stakeholder groups. Her broad-based experience includes air quality and air pollution control; water quality, water supply, and water pollution control; biological resources; public health and safety; noise studies; California Environmental Quality Act ("CEQA"), Clean Air Act ("CAA"), and National Environmental Policy Act ("NEPA") review; industrial ecology and risk assessment; and use of a wide range of environmental software.

EDUCATION

Doctorate in Environmental Science and Engineering (D.Env.), University of California Los Angeles, 2001

Master of Science (equivalent) in Biology (focus on Limnology), Technical University of Munich, Germany, 1991

PROFESSIONAL HISTORY

Pless Environmental, Inc., Principal, 2008–present

Environmental Consultant, Sole Proprietor, 2006–2008

Leson & Associates (previously Leson Environmental Consulting), Kensington, CA, Environmental Scientist/Project Manager, 1997–2005

University of California Los Angeles, Graduate Research Assistant/Teaching Assistant, 1994–1996

ECON Research and Development, Environmental Scientist, Ingelheim, Germany, 1992–1993

Biocontrol, Environmental Projects Manager, Ingelheim, Germany, 1991–1992

REPRESENTATIVE EXPERIENCE

Air Quality and Pollution Control

Projects include CEQA/NEPA review; CAA attainment and non-attainment new source review; prevention of significant deterioration ("PSD") and Title V permitting; control technology analyses (BACT, LAER, RACT, BARCT, BART, MACT); technology evaluations and cost-effectiveness analyses; criteria and toxic pollutant and greenhouse gas emission inventories; emission offsets; ambient and source monitoring; analysis of emissions estimates and ambient air pollutant concentration modeling. Some typical projects include:

- Provided expert support for intervention in California Energy Commission ("CEC") proceedings for numerous power plants including natural gas-fired, integrated gasification combined-cycle, geothermal (flash and binary) solar (thermal and photovoltaic) facilities with respect to air quality including emission reduction credits, hazards and hazardous materials, public health, noise, and biological resources.
- Critically reviewed and prepared technical comments on the air quality, biology, noise, water quality, and public health and safety sections of CEQA/NEPA documents for numerous commercial, residential, and industrial projects (*e.g.*, power plants, airports, residential developments, retail developments, university expansions, hospitals, refineries, slaughterhouses, asphalt plants, food processing facilities, slaughterhouses, feedlots, printing facilities, mines, quarries, landfills, and recycling facilities) and provided litigation support in a number of cases filed under CEQA.
- Critically reviewed and prepared technical comments on the air quality and public health sections of the Los Angeles Airport Master Plan (Draft, Supplement, and Final Environmental Impact Statement/Environmental Impact Report) for the City of El Segundo. Provided technical comments on the Draft and Final General Conformity Determination for the preferred alternative submitted to the Federal Aviation Administration.
- Prepared comments on proposed PSD and Title V permit best available control technology ("BACT") analysis for greenhouse gas emissions from a proposed direct reduced iron facility in Louisiana.
- Prepared technical comments on U.S. Environmental Protection Agency ("EPA")'s *Inhalation of Fugitive Dust: A Screening Assessment of the Risks Posed by Coal Combustion Waste Landfills* prepared for EPA's proposed coal combustion waste landfill rule.
- Prepared technical comments on the potential air quality impacts of the California Air Resources Board's *Proposed Actions to Further Reduce Particulate Matter at High Priority California Railyards*.
- For several California refineries, evaluated compliance of fired sources with Bay Area Air Quality Management District Rule 9-10. This required evaluation and review of hundreds of source tests to determine if refinery-wide emission caps and compliance monitoring provisions were being met.
- Critically reviewed and prepared technical comments on draft Title V permits for several refineries and other industrial facilities in California.
- Evaluated the public health impacts of locating big-box retail developments in densely populated areas in California and Hawaii. Monitored and evaluated impacts of diesel exhaust emissions and noise on surrounding residential communities.
- In conjunction with the permitting of several residential and commercial developments, conducted studies to determine baseline concentrations of diesel exhaust particulate matter using an aethalometer.
- For an Indiana steel mill, evaluated technology to control NOx and CO emissions from fired sources, including electric arc furnaces and reheat furnaces, to establish BACT. This required a comprehensive review of U.S. and European operating experience. The lowest emission levels were being achieved by steel mills using selective catalytic reduction ("SCR") and selective non-catalytic reduction ("SNCR") in Sweden and The Netherlands.

- For a California petroleum coke calciner, evaluated technology to control NOx, CO, VOCs, and PM10 emissions from the kiln and pyroscrubbers to establish BACT and LAER. This required a review of state and federal clearinghouses, working with regulatory agencies and pollution control vendors, and obtaining and reviewing permits and emissions data from other similar facilities. The best-controlled facilities were located in the South Coast Air Quality Management District.
- For a Kentucky coal-fired power plant, identified the lowest NOx levels that had been permitted and demonstrated in practice to establish BACT. Reviewed operating experience of European, Japanese, and U.S. facilities and evaluated continuous emission monitoring data. The lowest NOx levels had been permitted and achieved in Denmark and in the U.S. in Texas and New York.
- In support of efforts to lower the CO BACT level for power plant emissions, evaluated the contribution of CO emissions to tropospheric ozone formation and co-authored report on same.
- Critically reviewed and prepared technical comments on applications for certification ("AFCs") for numerous natural-gas fired, solar, biomass, and geothermal power plants in California permitted by the California Energy Commission. The comments addressed construction and operational emissions inventories and dispersion modeling, BACT determinations for combustion turbine generators, fluidized bed combustors, diesel emergency generators, etc.
- Critically reviewed and prepared technical comments on draft PSD permits for several natural gas-fired power plants in California, Indiana, and Oregon. The comments addressed emission inventories, greenhouse gas emissions, BACT, case-by-case MACT, compliance monitoring, cost-effectiveness analyses, and enforceability of permit limits.
- For a California refinery, evaluated technology to control NOx and CO emissions from CO Boilers to establish RACT/BARCT to comply with BAAQMD Rule 9-10. This required a review of BACT/RACT/LAER clearinghouses, working with regulatory agencies across the U.S., and reviewing federal and state regulations and State Implementation Plans ("SIPs"). The lowest levels were required in a South Coast Air Quality Management District rule and in the Texas SIP.
- In support of several federal lawsuits filed under the federal Clean Air Act, prepared cost-effectiveness analyses for SCR and oxidation catalysts for simple cycle gas turbines and evaluated opacity data.
- Provided litigation support for a CEQA lawsuit addressing the adequacy of pollution control equipment at a biomass cogeneration plant.
- Prepared comments and provided litigation support on several proposed regulations including the Mojave Desert Air Quality Management District Rule 1406 (fugitive dust emission reduction credits for road paving); South Coast Air Quality Management District Rule 1316, San Joaquin Valley Air Pollution Control District Rule 2201, Antelope Valley Air Quality Management District Regulation XIII, and Mojave Desert Air Quality Management District Regulation XIII (implementation of December 2002 amendments to the federal Clean Air Act).
- Critically reviewed draft permits for several ethanol plants in California, Indiana, Ohio, and Illinois and prepared technical comments.

- Reviewed state-wide average emissions, state-of-the-art control devices, and emissions standards for construction equipment and developed recommendations for mitigation measures for numerous large construction projects.
- Researched sustainable building concepts and alternative energy and determined their feasibility for residential and commercial developments, *e.g.*, regional shopping malls and hospitals.
- Provided comprehensive environmental and regulatory services for an industrial laundry chain. Facilitated permit process with the South Coast Air Quality Management District. Developed test protocol for VOC emissions, conducted field tests, and used mass balance methods to estimate emissions. Reduced disposal costs for solvent-containing waste streams by identifying alternative disposal options. Performed health risk screening for air toxics emissions. Provided permitting support. Renegotiated sewer surcharges with wastewater treatment plant. Identified new customers for shop-towel recycling services.
- Designed computer model to predict performance of biological air pollution control (biofilters) as part of a collaborative technology assessment project, co-funded by several major chemical manufacturers.
- Experience using a wide range of environmental software, including air dispersion models, air emission modeling software, database programs, and geographic information systems.

Water Quality and Pollution Control

Experience in water quality and pollution control, including surface water and ground water quality and supply studies, evaluating water and wastewater treatment technologies, and identifying, evaluating and implementing pollution controls. Some typical projects include:

- Evaluated impacts of on-shore oil drilling activities on large-scale coastal erosion in Nigeria.
- For a 500-MW combined-cycle power plant, prepared a study to evaluate the impact of proposed groundwater pumping on local water quality and supply, including a nearby stream, springs, and a spring-fed waterfall. The study was docketed with the California Energy Commission.
- For a 500-MW combined-cycle power plant, identified and evaluated methods to reduce water use and water quality impacts. These included the use of zero-liquid-discharge systems and alternative cooling technologies, including dry and parallel wet-dry cooling. Prepared cost analyses and evaluated impact of options on water resources. This work led to a settlement in which parallel wet dry cooling and a crystallizer were selected, replacing 100 percent groundwater pumping and wastewater disposal to evaporation ponds.
- For a homeowner's association, reviewed a California Coastal Commission staff report on the replacement of 12,000 linear feet of wooden bulkhead with PVC sheet pile armor. Researched and evaluated impact of proposed project on lagoon water quality, including sediment resuspension, potential leaching of additives and sealants, and long-term stability. Summarized results in technical report.

Applied Ecology, Industrial Ecology and Risk Assessment

Experience in applied ecology, industrial ecology and risk assessment, including human and ecological risk assessments, life cycle assessment, evaluation and licensing of new chemicals, and fate and transport studies of contaminants. Experienced in botanical, phytoplankton, and intertidal species identification and water chemistry analyses. Some typical projects include:

- Conducted technical, ecological, and economic assessments of product lines from agricultural fiber crops for European equipment manufacturer; co-authored proprietary client reports.
- Developed life cycle assessment methodology for industrial products, including agricultural fiber crops and mineral fibers; analyzed technical feasibility and markets for thermal insulation materials from natural plant fibers and conducted comparative life cycle assessments.
- For the California Coastal Conservancy, San Francisco Estuary Institute, Invasive Spartina Project, evaluated the potential use of a new aquatic pesticide for eradication of non-native, invasive cordgrass (*Spartina spp.*) species in the San Francisco Estuary with respect to water quality, biological resources, and human health and safety. Assisted staff in preparing an amendment to the Final EIR.
- Evaluated likelihood that organochlorine pesticide concentrations detected at a U.S. naval air station are residuals from past applications of these pesticides consistent with manufacturers' recommendations. Retained as expert witness in federal court case.
- Prepared human health risk assessments of air pollutant emissions from several industrial and commercial establishments, including power plants, refineries, and commercial laundries.
- Managed and conducted laboratory studies to license pesticides. This work included the evaluation of the adequacy and identification of deficiencies in existing physical/chemical and health effects data sets, initiating and supervising studies to fill data gaps, conducting environmental fate and transport studies, and QA/QC compliance at subcontractor laboratories. Prepared licensing applications and coordinated the registration process with German environmental protection agencies. This work led to regulatory approval of several pesticide applications in less than six months.
- Designed and implemented database on physical/chemical properties, environmental fate, and health impacts of pesticides for a major multi-national pesticide manufacturer.
- Designed and managed experimental toxicological study on potential interference of delta-9-tetrahydrocannabinol in food products with U.S. employee drug testing; co-authored peer-reviewed publication.
- Critically reviewed and prepared technical comments on applications for certification for several natural-gas fired, solar, and geothermal power plants and transmission lines in California permitted by the California Energy Commission. The comments addressed avian collisions and electrocution, construction and operational noise impacts on wildlife, risks from brine ponds, and impacts on endangered species.
- For a 180-MW geothermal power plant, evaluated the impacts of plant construction and operation on the fragile desert ecosystem in the Salton Sea area. This work included baseline noise monitoring and assessing the impact of noise, brine handling and disposal, and air emissions on local biota, public health, and welfare.

- Designed research protocols for a coastal ecological inventory in Southern California; developed sampling methodologies, coordinated field sampling, determined species abundance and distribution in intertidal zone, and conducted statistical data analyses.
- Designed and conducted limnological study on effects of physical/chemical parameters on phytoplankton succession; performed water chemistry analyses and identified phytoplankton species; co-authored two journal articles on results.

PRO BONO ACTIVITIES

Founding member of "SecondAid," a non-profit organization providing tsunami relief for the recovery of small family businesses in Sri Lanka. (www.secondaid.org.)

PUBLICATIONS & RECOMMENDATIONS

Available upon request.

Attachment 5

THE WALL STREET JOURNAL.

OW JONES

WEDNESDAY, JANUARY 15, 2014 ~ VOL. CCLXIII NO. 12 WSJ.com ★★★★ $2.00

JIA 16373.86 ▲ 115.92 0.7% NASDAQ 4183.02 ▲ 1.7% NIKKEI 15422.40 ▼ 3.1% STOXX600 331.23 ▲ 0.2% 10-YR. TREAS. ▼ 12/32, yield 2.869 OIL $92.59 ▲ $0.79 GOLD $1,245.20 ▼ $5.70 EURO $1.3679 YEN 104.21

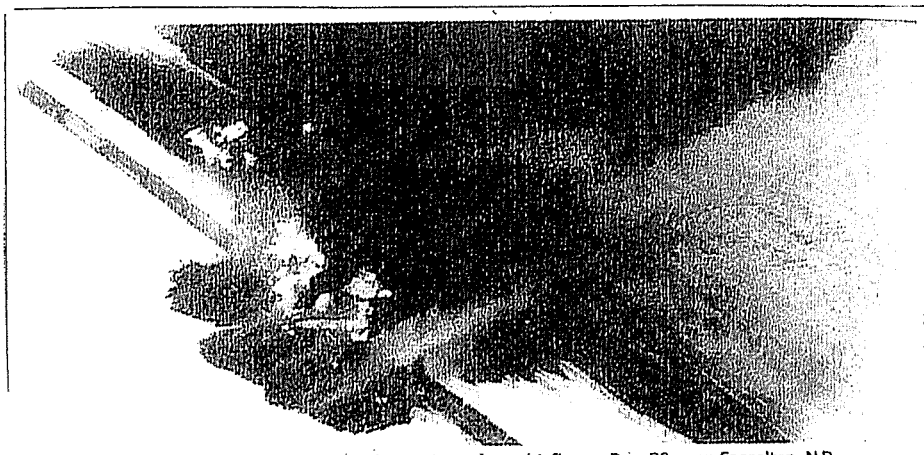

The Forum/Associated Press

A train carrying crude oil collided with another train and caught fire on Dec. 30 near Casselton, N.D.

Cities Grapple With Oil-Train Safety

By Russell Gold
And Lynn Cook

Every day, a train more than a mile long travels alongside a highway in Albany, N.Y., a half mile from the state capitol building and even closer to houses. Its cargo is crude oil from North Dakota, which federal regulators and railroads fear is more explosive than other oils.

In the past year, Albany has become an unlikely hub for the U.S. oil business, taking in shipments by rail and sending them out by ship down the Hudson River to refineries. Now officials there are trying to get up to speed on how to handle a potential oil-train accident, as are their peers from Chicago to Denver to New Orleans.

Railroad officials don't like to talk about it, but oil trains are rumbling through many large cities because of surging output from North Dakota's Bakken shale. Functioning as pipelines on rails, tanker cars full of oil pass through Detroit, Philadelphia, Toronto, St. Louis, Kansas City and Houston, among others.

Bakken crude, which has been involved in three major explosions after rail accidents in the past seven months, is traveling to every corner of the country: west into Washington state and then south to refineries near Los Angeles; south to Gulf Coast refiners; north into Canada; and east to refineries in New Jersey and Philadelphia.

Railroads and oil shippers wouldn't detail oil-train movements through their networks, citing security concerns. The Wall Street Journal identified routes through investor presentations and industry marketing material, as well as interviews with industry officials and experts.

The four major freight railroads involved—Union Pacific Corp., BNSF Railway Co., Canadian Pacific Railway Ltd. and Canadian National Railway Co.—all said they were sharing information about hazardous shipments with local emergency responders. Crude oil is classified as a hazardous substance.

Some critics worry about local preparedness. The growth in crude moving on railroads "came out of the blue," said Peter Iwanowicz, a former head of New York state's environmental agency and now executive director of a watchdog group called Environmental Advocates of New York.

"We're not an oil-patch state," he said. Officials may be aware of the oil trains, he added, "but are they prepared? I don't believe so."

John Layton, a captain in the Albany County Office of Emergency Management, said his agency recently met with Canadian Pacific and Global Partners LP, the storage and distribution firm that is shipping North Dakota crude through New York state.

"The crude trains are very big and carry a lot of potential fuel," Mr. Layton said. "It has the potential to burn a long time."

Global Partners, a public company based in Waltham, Mass., declined to comment.

Two local officials said Chicago, the largest rail hub in the U.S., might not be prepared for an oil-train accident. On Monday, Chicago Aldermen Edward Burke and Matthew O'Shea proposed levying a fee on every oil-filled railcar that passes through the city, to build up a fund that could be tapped in case of a derailment or fire in the city. Local officials can't bar oil trains, which are regulated by the federal government.

Some cities say they are ready for the oil-train influx. One is Tacoma, Wash., where the fire department says it has a plan, personnel and equipment, but worries about suburban and rural fire departments.

The three explosions stemming from recent oil-train derailments include a July accident in Lac-Mégantic, Quebec, that incinerated the downtown and left 47 people dead. An oil train caught fire in Alabama in November, and a Dec. 30 accident in rural North Dakota sent towering flames into the sky. Neither of those two caused injuries.

Concerns about emergency responders helped prompt the federal Pipeline and Hazardous Materials Safety Administration, or PHMSA, to warn that Bakken oil appeared to be more volatile than other crudes, which can burn but seldom have exploded. Dominique Dostie, a firefighter who fought the Lac-Mégantic blaze, said it took 30 hours of applying special foam to extinguish it.

"When emergency responders look at crude, they are thinking of a heavy crude that just sits there and is hard to ignite," said Cynthia Quarterman, head of the federal agency, part of the U.S. Department of Transportation.

The PHMSA is investigating whether Bakken crude might contain large amounts of gases and related liquids such as butane, propane and ethane.

At the American Petroleum Institute, "We look forward to reviewing PHMSA's findings as part of a continuing effort to improve the safety of rail transportation," said a spokesman, Brian Straessle.

New regulations that could require the industry to improve, phase out or retrofit tank cars used to haul some crude oil are over a year away, according to a schedule the Transportation Department published Tuesday.

Shale to Rail

The volume of oil moving on major U.S. railroads has expanded dramatically

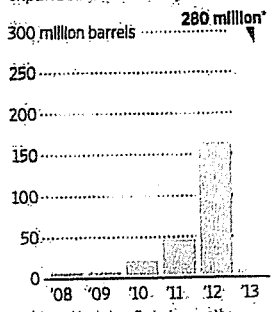

*Projected based on first nine months of the year

Source: Association of American Railroads

The Wall Street Journal

The U.S. and Canada both have large refineries on their coasts to handle imported crude oil. Over the past five years, U.S. companies began pumping more oil from the landlocked midcontinent, and the industry has developed new ways of moving it to refineries.

The most common new mode is rail, which is handling about 750,000 barrels a day from North Dakota—more oil than comes out of the giant Alaska North Slope oil field.

New crude-by-rail projects have been proposed across the country. In New York, state officials said they have received applications from Global Partners to build another rail-to-river facility capable of handling one train a day in New Windsor, N.Y., about 65 miles up the Hudson from New York City.

In Vancouver, Wash., refiner Tesoro Corp. and logistics firm Savage Cos. have proposed building a railroad terminal that could handle 360,000 barrels a day, twice the size of the oil terminal in Albany.

'This crude is coming through the area and we don't really know what it is,' said the fire chief of St. Louis.

Barry Cain, lead developer of Columbia Waterfront LLC, a $1.3 billion real-estate revitalization project in Vancouver with space 100 feet from the tracks, said he supports robust U.S. oil production but fears the trains would endanger residents. "What if one derails?" he asked. "There is no margin of error with these things."

The general manager of the proposed new rail terminal, Jared Larrabee, said it and waterfront development can co-exist. "We believe the region can and should have both," he said.

Vancouver Fire Dept. Battalion Chief Steve Eldred said hazardous-materials response plans are in place for existing train traffic, but would need to be studied and probably require additional resources to handle more oil trains.

Others say while the liquid cargo is labeled as crude, it is exploding like jet fuel. The North Dakota crude "has a tremendous amount volatility and puts out a lot of heat," said Dennis Jenkerson, the fire chief for St. Louis.

"We train for this every year, and you prepare for the worst," he said. "My biggest concern is that this crude is coming through the area and we really don't know what it is."

—Chester Dawson, Ben Kesling and Betsy Morris contributed to this article.

Attachment 6

SET EDITION: U.S. | INTERNATIONAL | MÉXICO | ARABIC
TV: CNN | CNNi | CNN en Español | HLN

CNN U.S.

Sign up | Log in
SEARCH

Home | TV & Video | CNN Trends | U.S. | World | Politics | Justice | Entertainment | Tech | Health | Living | Travel | Opinion | iReport | Money | Sports

North Dakota train collision ignites oil cars; fire to burn out

By **Steve Almasy**, CNN
updated 10:05 PM EST, Mon December 30, 2013

SHARE THIS
Print
Email
More sharing
Recommend 1.2k

Source: CNN

STORY HIGHLIGHTS

- **NEW:** Sheriff urges residents to leave town because winds are expected to shift
- Fire will take 12 hours to burn itself out
- Officials aren't sure if one train derailed before the accident
- Smoke can be seen in Fargo, 25 miles away

ADVERTISEMENT
360 Savings℠
Capital One 360
MEMBER FDIC

(CNN) -- A wreck involving two trains, one of which was carrying crude oil, sparked a large fire Monday that sent huge flames and dangerous smoke into the sky, North Dakota authorities said.

There were no reports of injuries from the accident, said Sgt. Tara Morris with the Cass County Sheriff's Office, but "with the oil on fire there are hazardous conditions, and we are directing all people in the area to shelter in-place and stay indoors."

Firefighters will be forced to let the fire burn out, which may take as long as 12 hours from the time of the accident (2:12 p.m. CT), because they cannot get close enough to the flames, she told CNN.

The incident occurred one mile west of Casselton, a town of 2,300 residents about 25 miles west of Fargo. Huge plumes of smoke could be seen in Fargo, Morris said.

The sheriff's office advised all residents in Casselton and two nearby townships to evacuate because the winds were shifting due to a high -pressure system.

A Red Cross shelter in Fargo was available, the sheriff's office said.

Morris said it was unclear how the accident happened and authorities are trying to determine whether one of the trains derailed before they collided.

About 10 of the cars on the train carrying oil were fully engulfed in flames. At least a dozen firefighters are involved, she said.

An official with the Federal Railroad Administration said it will support a National Transportation Safety Board investigation of the accident.

CNN's Aaron Cooper and Carma Hassan contributed to this report.

552
Comments »

SHARE THIS
Print
Email

Robin Roberts

South Sudan

Michael Schumacher

Palestinian Prison...

More from CNN Video:

'I just knew the bus had to stop'

Caught on camera: Driver tosses package

Cyrus video leaves little to imagination

This woman does WHAT for a living?

How do Icebreakers get stuck?

Video shows shocking 'knockout' attack

More from CNN:

Attachment 7

Print Close

Evacuation lifted for Casselton, ND following fiery train derailment

Published December 31, 2013 | FoxNews.com

CASSELTON, N.D. – A southeastern North Dakota town narrowly escaped tragedy when a train carrying crude oil derailed and exploded nearby, the mayor said Tuesday, calling for changes in how the fuel is transported across the United States.

No one was hurt in Monday's derailment of the mile-long train that sent a great fireball and plumes of black smoke skyward about a mile from the small town of Casselton. The fire had been so intense as darkness fell that investigators couldn't get close enough to count the number of burning cars.

Worries about the smoke plume prompted officials to ask Casselton's 2,400 residents to voluntarily evacuate Monday evening, and most did. The recommendation was lifted Tuesday afternoon, but officials were urging residents south of the derailment to remain vigilant about changing conditions, Cass County Commissioner Ken Pawluk said.

Residents said the blasts endured for hours after the derailment, shaking their homes and businesses. A BNSF spokeswoman said 18 tanker cars burned.

Pawluk estimated that the fire was about 80 to 90 percent burned out by Tuesday afternoon.

National Transportation Safety Board officials on the scene said the agency's investigation would examine the train recorder, the signal system, the condition of the train operators, train and tracks, as well as the response to the derailment.

Board member Robert Sumwalt said the tankers involved were DOT-111s, a model that has shown a tendency to rupture in other accidents, but he said it wasn't immediately clear if they were newer, safer DOT-111s or the older models.

The rail tracks run straight through the middle of Casselton, a town of 2,400 people about 25 miles west of Fargo. Mayor Ed McConnell estimated that dozens of people could have been killed if the derailments had happened within the town. He said it is time to "have a conversation" with federal lawmakers about the dangers of transporting oil by rail.

"There have been numerous derailments in this area," he told The Associated Press. "It's almost gotten to the point that it looks like not if we're going to have an accident, it's when. We dodged a bullet by having it out of town, but this is too close for comfort."

A train carrying crude from North Dakota's Bakken oil patch crashed in Quebec last summer, bursting into flames and killing 47 people.

Shipping oil by pipeline has to be a safer option, McConnell said Tuesday.

North Dakota is the No. 2 oil-producing state in the U.S., trailing only Texas. The state's top oil regulator said earlier this month that he expected as much as 90 percent of North Dakota's oil to be carried by train in 2014, up from 60 percent.

Ron Ness, president of the North Dakota Petroleum Council, called the derailment "extremely unfortunate."

"We're glad no one was hurt," said Ness, whose Bismarck-based group represents several hundred companies working in the state's oil patch. "I certainly think we'll see some continued efforts on safety to the rail system and rail cars."

North Dakota oil drillers increasingly use trains to ship crude to locations not served by pipelines, in part because of the difficulty in securing permits for the structures, Ness said.

"For every action, there is a reaction or counter-action," he said. "Getting any product to market from North Dakota always has been a challenge, whether it is oil, sugar beets or beef. And we have been able to find good markets because the rail industry has responded."

The number of crude oil carloads hauled by U.S. railroads surged from 10,840 in 2009 to a projected 400,000 this year. Despite the increase, the rate of accidents has stayed relatively steady. Railroads say 99.997 percent of hazardous materials shipments reach destinations safely.

Authorities haven't yet been able to untangle exactly what caused the derailment. BNSF spokeswoman Amy McBeth said another train carrying grain derailed first, and that this knocked several cars of the oil train off adjoining tracks.

BNSF said each train comprised more than 100 cars.

Print Close

URL

http://www.foxnews.com/us/2013/12/31/no-injuries-reported-in-fiery-north-dakota-train-derailment/

Home | Video | Politics | U.S. | Opinion | Entertainment | Tech | Science | Health | Travel | Lifestyle | World | Sports | Weather

Privacy | Terms

This material may not be published, broadcast, rewritten, or redistributed. © 2014 FOX News Network, LLC. All rights reserved. All market data delayed 20 minutes.