CBE, Sierra Club, Center, ForestEthics et al. Comments on the Revised Draft Environmental Impact Report for the Phillips 66 Company Rail Spur Extension and Crude Unloading Project

ATTACHMENT B:

Expert Report of Greg Karras on the Revised Draft Environmental Impact Report for the Phillips 66 Rail Spur Extension and Crude Unloading Project, November 2014.

Expert Report of Greg Karras
Communities for a Better Environment (CBE)
24 November 2014

Regarding the

Phillips 66 Company Rail Spur Extension and Crude Unloading Project
Revised Draft Environmental Impact Report (RDEIR) dated October 2014
Prepared for San Luis Obispo County
State Clearinghouse #2013071028
County File #DRC2012–00095

Contents

Qualifications	page	1
Scope of Review		3
Energy Source		3
Project Scope		7
Cumulative Impact		18
Alternatives		20

I, Greg Karras, declare and say:

1. I reside in unincorporated Marin County and am employed as a Senior Scientist for Communities for a Better Environment (CBE). My duties for CBE include technical research, analysis, and review of information regarding industrial health and safety investigation, pollution prevention engineering, pollutant releases into the environment, and potential effects of environmental pollutant accumulation and exposure.

Qualifications

2. My qualifications for this opinion include extensive experience, knowledge, and expertise gained from nearly 30 years of industrial and environmental health and safety investigation in the energy manufacturing sector, including petroleum refining, and in particular, refineries in the San Francisco Bay Area. CBE-72

3. Among other assignments, I served as an expert for CBE and other non-profit groups in efforts to prevent pollution from refineries, to assess environmental health and safety impacts at refineries, to investigate alternatives to fossil fuel energy, and to improve environmental monitoring of dioxins and mercury. I served as an expert for CBE in collaboration with the City and County of San Francisco and local groups in efforts to replace electric power plant technology with reliable, least-impact alternatives.

I served as an expert for CBE and other groups participating in environmental impact reviews of related refinery projects, including, among others, the Chevron Richmond refinery "Hydrogen Renewal Project" now subject to reanalysis pursuant to a California Court of Appeals Order,[1] and the Phillips 66 "Propane Recovery Project" now pending before Contra Costa County.[2] I serve as an expert for CBE in collaboration with labor, academic, and other community based and environmental groups in a project involving comprehensive investigation of environmental health and safety impacts of, and alternatives to, refining denser, more contaminated types of crude oils.

4. I authored a technical paper on the first publicly verified pollution prevention audit of a California petroleum refinery in 1989 and the first comprehensive analysis of refinery selenium discharge trends in 1994. I authored an alternative energy blueprint, published in 2001, that served as a basis for the Electricity Resource Plan adopted by the City and County of San Francisco in 2002. From 1992–1994 I authored a series of technical analyses and reports that supported the successful achievement of cost-effective pollution prevention measures at 110 industrial facilities in Santa Clara County. I authored the first comprehensive, peer-reviewed dioxin pollution prevention inventory for the San Francisco Bay, which was published by the American Chemical Society and Oxford University Press in 2001. In 2005 and 2007 I co-authored two technical reports that documented air quality impacts from flaring by San Francisco Bay Area refineries, and identified feasible measures to prevent these impacts.

CBE-72 cont

5. My recent publications include the first peer reviewed estimate of combustion emissions from refining denser, more contaminated "lower quality" crude oils based on data from U.S. refineries in actual operation, which was published by the American Chemical Society in the journal *Environmental Science & Technology* in 2010, and a follow up study that extended this work with a focus on California and Bay Area refineries, which was peer reviewed and published by the Union of Concerned Scientists in 2011. Most recently, I presented invited testimony on *inherently safer systems* requirements for existing refineries that change crude feedstock at the U.S. Chemical Safety Board's public hearing on the Chevron Richmond refinery fire that was held on 19 April 2012. My curriculum vitae and list of publications are attached hereto.

---

[1] *See CBE v. City of Richmond* 184 Cal_App.4th.
[2] *See* Contra Costa Pipeline Project file, County File #LP072009, SCH #2007062007.

Scope of Review

6. In my role at CBE I have reviewed the proposed project called the Phillips 66 Company Rail Spur Extension and Crude Unloading Project (project) and the October 2014 Revised Draft Environmental Impact Report (RDEIR) released by San Luis Obispo County for public review of the proposed project. My review of the project and DEIR reported herein is focused on the primary energy source and scope of the project as those relate to its potential environmental impacts. My opinions on these matters and the basis for these opinions are stated in this report. CBE-72 cont

Energy Source

7. The RDEIR states that the project would install, at the Phillips 66 Santa Maria Facility (SMF), rail spur modifications, a mainline turnout, an unloading facility, an unloading system, a fire protection and safety system, pipelines, access roads, emergency vehicle access, a security fence, spill containment and response facilities, and buildings. (RDEIR at 2-8.) This would enable delivery via rail of crude oil for processing at the SMF. Proposed equipment could unload DOT-111 rail cars that, when filled to their weight limits with high-density ('heavy') crude, could carry ≈52,000 barrels per 80-car train (RDEIR at 2-22), and unload each train's rail cars in ≈11.5 hours. (RDEIR at 2-29.) This suggests a maximum *offloading*[1] capacity of ≈104,000 b/d (2 trains/day). CBE-73

8. In a significant change from the project described by the November 2013 DEIR, the RDEIR states no Bakken crude would be delivered. (RDEIR at 2-1, 2-22.) It also says new infrastructure would allow steam-heating to unload rail cars if the highly-viscous crude in them cools below its pour point during transit. (RDEIR at 2-14, 2-15.) It further states each rail car would carry less than its nominal capacity—approximately 27,300 gallons instead of its capacity of 31,808 gallons—because of weight limits and the high density of the crude to be delivered. (RDEIR at 2-22.) Finally, the examples of 'potential crude by rail sources' given are bitumen-derived oils extracted from the Alberta tar sands. (RDEIR at 2-33.[2]) These disclosures, and the tar sands' predominance among North American sources of oils with the high density and viscosity thus disclosed, indicate that tar sands oils would likely dominate the new crude source. CBE-74

---

[1] SMF's proposed *processing* capacity of 48,950 b/d indicates a real capacity of ≈1 train/d or 344 trains/year. The RDEIR provides no data supporting its "expected" maximum of 250 trains/year.
[2] Access Western Blend and Peace River Heavy are tar sands oils; *see* www.crudemonitor.ca.

9. Tar sands bitumen is fundamentally different from heavy oil or conventional crude.[3] The RDEIR states that the purpose of the rail spur is to "[a]llow the refinery to obtain a range of competitively priced crude oil by providing the capability to obtain raw material from North American sources that are served by rail." (RDEIR at 2-1.) However, "the availability of these competitively priced" North American crude streams might drive the project only "[i]n the short-term (three to five years)." (RDEIR at 2-36.) The rail spur would be expected to operate for "20 or 30 years, if not longer." (Id.) The RDEIR does not disclose that the project would enable a long-term switch to a fundamentally different primary energy source for transportation fuels. CBE-75

10. The RDEIR asserts that "[t]he ability of the SMR to operate at the maximum approved throughput level is based on the existing infrastructure and is not dependent on, or related to, the SMR rail project."[4] This assertion is inaccurate and misleading. The Throughput Increase Project referenced is not yet implemented (and appears to await an approval). Based on the most recent three-years before the rail project notice, average 2010–2012 SMF crude throughput (≈38,000 b/d[5]) would have to increase by ≈29% to achieve its 'maximum approved' annual average throughput level (48,950 b/d[6]). Moreover, the SMF's ability to boost crude rate and achieve this 'maximum approved throughput' on a sustained basis is limited by its existing crude delivery infrastructure. Built to tap local oil fields, the SMF lacks infrastructure to receive crude via ship or rail. A pipeline system that connects the SMF only to local oil fields "is currently the only way that the Phillips 66 refinery can receive crude oil." (RDEIR at 2-35.) And as the RDEIR acknowledges (RDEIR at 2-36), crude production from the key Central Coast oil fields that feed the SMF via this pipeline system is dwindling. CBE-76

11. Indeed, the RDEIR admits: "In the long-term, the need for the SMR rail project could be driven by declines in local production of crude oil that can be delivered by pipeline." (RDEIR at 2-36.) This indicates that the throughput increase *would* depend on the rail spur, and that rather than merely enabling speculation on the crude oil market, the project would enable the SMF to be re-purposed, from serving local crude production, to upgrading imported tar sands oil. Failure to disclose *that* is a clear error in the RDEIR. CBE-77

---

[3] *See* Meyer et al. at 2; USGS Open-File Report 2007-1084; (http://pubs/usgs/gov/of/2007/).
[4] RDEIR at 2-35. This assertion references the SMF 'Throughput Increase Project' (Id.)
[5] Based on 37,785 b/d (2010), 38,701 b/d (2011), and 37,602 b/d (2012); *see* RDEIR at 2-35.
[6] RDEIR at 2-35 (proposed 'Throughput Increase Project' to an annual average of 48,950 b/d).

12. The RDEIR does not include or analyze relevant data to evaluate the extent to which Phillips' rail spur proposal could replace locally produced crude feed for the SMF. It omits data describing production rates of oil fields that currently supply the SMF, such as McCool Ranch, and fields in the San Joaquin Valley Basin. It also omits data on the portion of each field's production that is needed by other refiners, committed to other refiners, or both. The RDEIR also does not include or analyze year-on-year production to support more robust trend analysis and forecasts. CBE-77 cont

13. Abundant evidence that the RDEIR does not include or analyze demonstrates that declining local and regional crude production could greatly affect SMF operation.[7] Total California crude production supplied to refineries statewide has declined by 43% from its peak of 1.10 million barrels per day in 1986 to 631 thousand barrels/day (Mb/d) in 2013, and California crude now supplies only 40% of statewide refinery crude input.[8] Statewide, coastal onshore production was 137 Mb/d in 1977 but only 60.3 Mb/d in 2012, indicating a gross decline of –56% and a year-on-year decline averaging –2.0%/year in this period.[9] State offshore production peaked in 1978 at 107 Mb/d and was 35.6 Mb/d in 2012, indicating a gross decline of –67% and a year-on-year decline averaging –3.6%/y.[10] In California's San Joaquin Basin, crude production peaked in 1986 at 745 Mb/d and was 405 Mb/d in 2012, a gross decline of –46% and annual decline averaging –2.3%/y.[11] California federal Outer Continental Shelf (OCS) production peaked in 1995 at 197 Mb/d and was 41.1 Mb/d in 2012, a gross decline of –79% and an average year-on-year decline during this period of –8.3%/y.[12] Some 13 Central Coast OCS, state offshore and onshore fields have been identified as sources of crude for the SMF.[13] Total production from these 'local supply' sources was 191 Mb/d in 1995 but only 67.1 Mb/d in 2012, a gross decline of –65% and a year-on-year decline ranging from –2.8%/y since 2003 to –5.8%/y since 1995.[14] See Figure 1. This 2.8–5.8%/year decline is within the range found elsewhere in the state that is discussed above (2.0–8.3%/y). As Figure 1 illustrates, this CBE-78

[7] This finding also applies to the Rodeo Facility of the Phillips 66 San Francisco Refinery.
[8] Cal. Energy Commission (http://energyalmanac.ca.gov/petroleum/statistics/crude_oil_receipts).
[9] U.S. Energy Information Admin. (http://www.eia.gov/dnav/pet/pet_crd_pres_dcu_rcac_a.htm).
[10] U.S. EIA (http://www.eia.gov/dnav/pet/pet_crd_pres_dcu_rcasf_a.htm).
[11] U.S. EIA (http://www.eia.gov/dnav/pet/pet_crd_pres_dcu_rcaj_a.htm).
[12] U.S. EIA (http://tonto.eia.gov/dnav/pet/hist/LeafHandler.ashx?PET&s=RCRR10R5F+1&f=A).
[13] The Pt. Perdernales, Pt. Arguello, Santa Ynez, Elwood S. Offshore, Arroyo Grande, San Ardo, Cat Canyon, Orcutt, Santa Maria Valley, Lompoc, Casmalia, McCool Ranch, and Zaca fields.
[14] Data from State Division of Oil, Gas, & Geothermal Resources (DOGGR) and US DOI Bureau of Safety and Environmental Enforcement (BSEE). See Exhibit 1 Appended hereto.

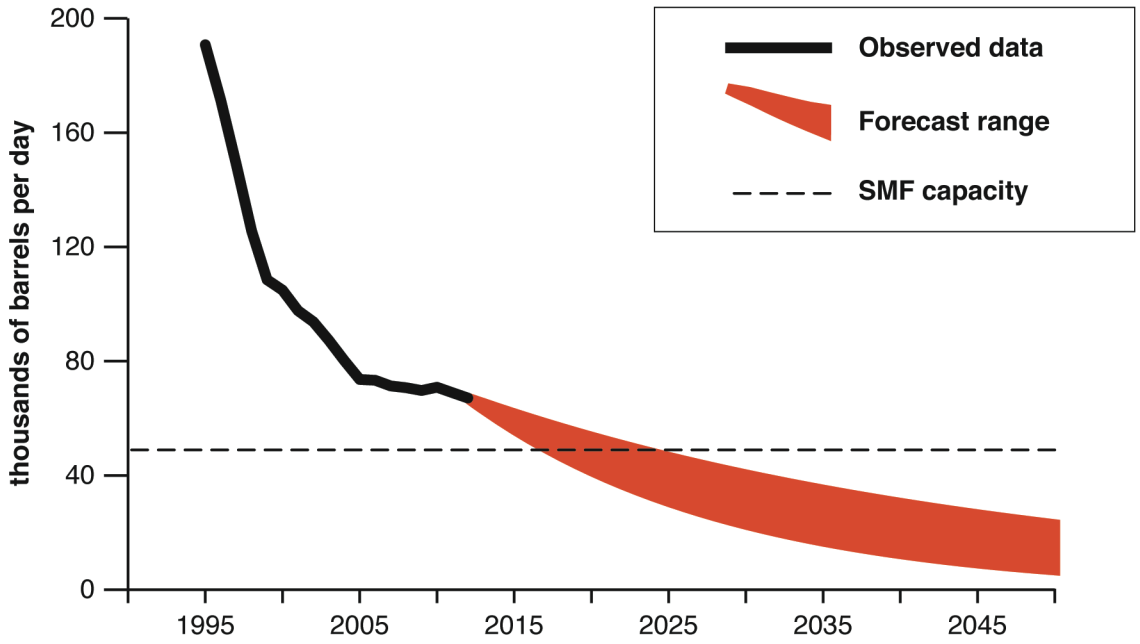

Figure 1. Total Central Coast OCS, offshore, and onshore oil production of fields supplying crude oil to the Phillips 66 SMF from 1995–2012, and forecast to 2050.

Observed production by year, in thousands of barrels per day (Mb/d)

1995	191 Mb/d	2001	97.7 Mb/d	2007	71.3 Mb/d
1996	171 Mb/d	2002	93.8 Mb/d	2008	70.7 Mb/d
1997	149 Mb/d	2003	87.3 Mb/d	2009	69.7 Mb/d
1998	126 Mb/d	2004	80.2 Mb/d	2010	70.9 Mb/d
1999	108 Mb/d	2005	73.6 Mb/d	2011	69.0 Mb/d
2000	105 Mb/d	2006	73.3 Mb/d	2012	67.1 Mb/d

Data from Cal. Dept. of Conservation (DOGGR) and U.S. Dept. of Interior (BSEE); *see* Exhibit 1 for details. Oil fields included are Pt. Perdernales, Pt. Arguello, Santa Ynez, Elwood S. Offshore, Arroyo Grande, San Ardo, Cat Canyon, Orcutt, Santa Maria Valley, Lompoc, Casmalia, McCool Ranch, and Zaca.
Forecast range based on range of average year-on-year decline rates (2.8–5.8%/yr) from a more recent (2003–2012) and longer (1995–2012) period, after CEC method (*see* CEC-600-2010-002-SF at 138).
SMF capacity based on Santa Maria Facility maximum proposed rate (48,95 Mb/d) from RDEIR at 2-35.

CBE-78 cont

2.8–5.8%/year rate of decline could result in total production from these 'local supply' sources falling below the maximum capacity of the SMF to process crude within a few years, and then falling further, to a small fraction of SMF design capacity, within the expected operating life of the proposed rail spur. When its crude rate falls too far below the design specifications of its existing equipment, such as its pipelines and vacuum unit, the existing SMF cannot operate efficiently or profitably.

14. This evidence shows that, as the RDEIR's incomplete analysis acknowledges, the project would enable the long-term replacement of declining local SMF crude supplies. The SMF, a facility sited, designed, and built to serve and be supplied by local crude oil production that now, some 60 years later, is dwindling, will soon outlive this purpose. Thus, Phillips' proposal presents a choice: should it be allowed to extend this refining operation for several decades by re-purposing the SMF to process tar sands oil that is imported by rail? The RDEIR should have evaluated this choice and its environmental implications instead of obscuring them. CBE-79

Project Scope

15. Phillips' Santa Maria and Rodeo facilities (SMF and RF, respectively) are interdependent parts of its San Francisco Refinery (SFR), and its SMF rail spur,[15] SMF throughput increase,[16] and RF LPG[17] proposals are interdependent parts of a larger project that has been piecemealed, as shown below. CBE-80

16. SFR is identified and reported as a single oil refinery comprised of the SMF and RF by government and industry authorities,[18] by San Luis Obispo County,[19] and by Phillips itself (see Phillips 66 website).[20] SFR's primary, and from Phillips' perspective essential, products are gasoline, diesel and jet fuel. (Id.) But the SMF does not make *any* finished gasoline, diesel, or jet fuel by itself, and lacks the hydroprocessing and naphtha reforming capacity necessary to do so—all of the SFR hydrocracking, hydrotreating, hydrogen production, and naphtha reforming capacity is at the RF.[21] Instead, Phillips 66 sends all of the partially upgraded feedstock that the SMF produces (gas oil and naphtha-pressure distillate) through a proprietary pipeline to the RF, where all of the SFR's CBE-81

---

[15] "Rail Spur Extension and Crude Unloading Project"; SCH #201307028; this RDEIR.
[16] "Throughput Increase Project"; SCH #20081010111; pending approval (*see* RDEIR at 2-35).
[17] "Propane Recovery Project"; SCH #2012072046; comment on revised DEIR due 12/2/14.
[18] *Compare* refinery capacity reports by EIA (http://www.eia.gov/petroleum/refinerycapacity/) and *Oil & Gas Journal* (http://www.ogj.com/ogj-survey-downloads.html#worldref) to facility configuration and throughput reports by State Regional Water Quality Control board permits (Order R3-2013-0028 at Table F-9 and Order R2-2010-0027 at Table F-1C); *see* also RDEIR at 2-32; Throughput Increase FEIR at 2-12; and 'Propane Recovery' RDEIR at 3-10 through 3-19.
[19] *See* this RDEIR at 2-4; Throughput Increase FEIR at 2-1. Notably, the 'Propane Recovery' RDEIR's only references to the SFR are in its reference titles and a footnote on page 1-3 regarding changes of ownership: it fails to disclose that the RF is a component of the SFR.
[20] www.phillips66.com/EN/about/our-businesses/refining-marketing/refining/Pages/index.aspx
[21] *Compare* refinery capacity reports and facility-level orders and EIRs cited in the note above.

finished gasoline, diesel and jet fuel is made and then shipped from the RF product pipelines and wharf for sales.[22] The SMF thus depends upon the RF for transport fuel production and financially sustainable operation. CBE-81 cont

17. The RF, in turn, relies on the SMF for sufficient feedstock delivery and deep conversion (coking) capacity. San Joaquin Valley Pipeline (SJVP) crude delivery to the RF is declining with declining San Joaquin Basin production (see paragraph 13), and this decline has already driven a throughput increase at the RF wharf (BAAQMD, 2012).[23] Even with this new wharf capacity, however, oil delivery across the wharf is limited to only 51.2 Mb/d. (Id.) Crude delivery and upgrading via the SMF—the only other way the SFR receives crude—is a substantial portion (≈38.0 Mb/d[24]) of its total crude supply. All SFR crude input is necessarily finished at the RF to make a financially sustainable product slate (see paragraph 16), so the SFR, and thus the RF, needs this SMF-derived crude. Moreover, roughly half of the coking capacity utilized by the SFR currently is at the SMF.[25] The RF needs this additional deep conversion capacity at SMF to feed its hydrocrackers sufficient heavy gas oil for the SFR to convert its crude slate into gasoline, diesel, and jet fuel efficiently and, from Phillips' standpoint, economically. Indeed, the new heavy gas oil hydrocracker at the RF that is fed this SMF gas oil[26] was built for exactly that purpose,[27] and could become a stranded asset without that feed. CBE-82

18. Similarly, the SMF relies on existing infrastructure for feedstock. The SMF relies on a pipeline system fed by declining local crude supplies that cannot maintain its current crude rate for long, much less sustain a crude rate increase of ≈29% to 48.95 Mb/d, the proposed throughput increase—but the rail proposal could do so. (Paragraphs 7–14.) In the absence of a new port, interstate pipeline, long-distance trucking plan, or any other CBE-83

---

[22] *See* this RDEIR at 2-4 and the Throughput Increase FEIR at 2-1; *see* also the product export facilities discussion in the 'Propane Recovery' RDEIR at 3-18. As stated, the SMF was sited on the Central Coast to tap local crude sources there. This, together with San Francisco Bay/Delta tanker port capacity afforded to the RF, helps explain the SFR's geographically unusual design.
[23] *See* BAAQMD, 2012. *Marine Terminal Offload Limit Revision Project CEQA Initial Study* at i, 1–3, 17 (*crude and gas* oil offloading limit increase of 20,500 b/d to 51,182 b/d to replace equal volume California *crude* via pipeline, based on CSLC 1995 EIR); and CLSC 1995 FEIR (SCH #91053082) at Section 4 page S-4 ("it is assumed that sources of San Joaquin" and "Alaskan crude, will decline" and "[m]ore reliance will be placed on crude imports from foreign sources").
[24] Based on 37,785 b/d (2010), 38,701 b/d (2011), and 37,602 b/d (2012); *see* RDEIR at 2-35.
[25] From 23,200 b/d (Order R3-2013-0028 Table F-9) v. 47,000–48,000 b/cd (*Oil & Gas J.*; EIA).
[26] *See* 'Propane Recovery Project' RDEIR at 3-10 through 3-12.
[27] *See* 'Clean Fuels Expansion' Nov. 2006 Prelim. EIR SCH #2005092028 at 3-1, 3-18, 3-22/23.

credible proposal for sustained delivery of sufficient imported crude to implement this project component, the proposed throughput increase is dependent upon the rail spur. CBE-83 cont

19. A third component of the piecemealed project involves propane and butane, which are liquefied petroleum gases (LPG).[28] LPG is in refiners' hydrocarbon streams because it distills out from oil feeds, and because it is created in coking, hydrocracking, and other refining processes that 'crack' (break apart) larger, denser, or higher boiling-point hydrocarbons in the oil feeds. LPG is burned as refinery fuel, recovered, or both. Not all LPG present in all refinery hydrocarbon streams is recoverable with currently available technology. Propane and butane that is recovered can be sold as fuel or as petrochemical feedstock, and butane can be blended into winter gasoline. Phillips 66 proposes to recover propane and additional butane at its RF. This 'Propane Recovery Project' would install a hydrotreater, recovery columns, pressure storage bullets, and a rail loading spur and rack, and—decades after other refiners stopped exploiting the San Francisco Bay/Delta in this way—would expand Phillips' once-through cooling system. Contra Costa County requests comment on a revised draft EIR for this LPG proposal at the same time[29] San Luis Obispo County seeks comment on the SMF rail spur RDEIR. CBE-84

20. The publicly verifiable data in the record indicate that insufficient propane and butane is recoverable in the project baseline to implement Phillips' LPG proposal without the additional cracking process feedstock, additional LPG-rich naphtha/pressure distillate, or both, that its SMF throughput increase and rail spur could supply. My past comments, and those of others, raised and documented this finding. Unfortunately, instead of reporting and analyzing publicly verifiable data on current and potential sources of recoverable LPG, the counties' environmental reviews, thus far, have dismissed those comments with unsupported and contradictory assertions. I reassert my September 2013 expert report comment and 20 January 2014 supplemental technical comments regarding CEQA review of this 'Propane Recovery Project.' These comments remain valid and have not been addressed in the revised draft EIRs for the Rodeo LPG proposal or the Santa Maria rail proposal. See esp. exhibits 2–5.[30] CBE-85

---

[28] Herein, "LPG" means propane and butane, the only gases Phillips' proposal would recover.
[29] Comment is requested by 2 Dec 2014. *See* SCH #2012072046 Notice dated 17 Oct 2014.
[30] The 4 Sep 2013 Expert Report of Greg Karras regarding the Phillips 66 Company Propane Recovery Project, SCH #2012072046, CC County File #LP12-2073 (Exhibit 2); 7 January 2014 CBE Supplemental Evidence–B (Exhibit 3); 14 January 2014 CBE Supplemental Evidence–C (Exhibit 4); and 20 January 2014 CBE Supplemental Evidence–D (Exhibit 5).

21. The new argument that vapor pressure limits do not allow any more LPG to be sent from the SMF to Rodeo[31] is totally unsupported by any data in the RDEIRs, improbable,[32] erroneous,[33] and ultimately may be little more than a distraction. This 'vapor pressure' argument ignores, and thereby distracts from a crucial point: LPG feedstock sent to Rodeo not as LPG, but as gas oils and pressure distillate (naphtha), yields substantial amounts of recoverable LPG from processing at Rodeo. Ignoring this link between the facilities' project components would be a fatal error. CBE-86

22. Some of the volumetric implications for RF hydrocracking and reforming of gas oil and naphtha in a 'SMF projects' scenario, in which the rail and throughput proposals are implemented, and in 'No SMF projects' scenarios, in which those projects are not implemented, are summarized in Table 1. Gas oil and naphtha/pressure distillate are the major SMF exports to the RF. Gas oils are hydrocracked at the RF to make gasoline, diesel, and jet fuel sized hydrocarbon molecules with high enough hydrogen:carbon ratios for these high-value products—and produces significant amounts of propane and butane in this process. The gasoline stream (naphtha) must also be 'reformed' to boost octane rating, and thus is processed via catalytic naphtha reforming at the RF. The table shows changes from current (2010–2012) conditions in both scenarios identified above. CBE-87

23. As stated, available evidence indicates insufficient currently recoverable LPG. Estimates based on publicly verifiable data for LPG known to be recoverable with available technology indicate that roughly half of Phillip's proposed LPG recovery capacity would be idle in these 'baseline' conditions. (See exhibits 2, 4, and 5.) Implementing the SMF throughput increase and rail components, however, would boost its naphtha and gas oil deliveries to Rodeo by ≈29% and boost *total* RF gas oil hydrocracking by ≈11%. See Table 1. Because hydrocracking is a significant CBE-88

[31] *Response to Appeals by the Rodeo Citizens Association and Communities for a Better Environment;* letter from Mark E. Evans, Phillips 66 San Francisco Refinery Manager, to Chair Karen Mitchoff and Members of the Contra Costa County Board of Supervisors. 6 January 2014; Rail Spur RDEIR at 2-31; and Propane Recovery RDEIR at 3-25, 2-36.

[32] The naphtha-pressure distillate and gas oil produced and delivered would be expected to have vapor pressures substantially below the cited limits.

[33] CBE has gathered relevant data that the RDEIR omits and will submit our full analysis of this point separately. *See* comments of Phyllis Fox. Nevertheless, based on the APCD's Throughput Increase FEIR description at least some of the tanks are controlled, should be exempt from the cited vapor limits for that reason, and would be well within those limit values in any case.

Table 1. Estimated oil feedstock effects at the refinery's Rodeo Facility in 'project' and no project' scenarios for the Santa Maria crude by rail and throughput increase.
*****Figures EXCLUDE additional LPG-boosting effects of tar sands 'dilbit' processing*****

Data in thousands of barrels/day (Mb/d), and percent

	Current conditions	Santa Maria Project Component Scenarios	
		SMF projects	No SMF projects
Santa Maria Facility			
crude throughput (Mb/d)	38.00	48.95	17.82
Δ vs. current (%)	——	29%	-53%
naphtha to Rodeo (Mb/d)	11.63	14.98	5.45
% Δ vs. current	——	29%	-53%
gas oil to Rodeo (Mb/d)	20.71	26.68	9.71
% Δ vs. current	——	29%	-53%
Rodeo Facility			
hydrocracking			
capacity (Mb/d)	58.00	58.00	58.00
feed rate (Mb/d)	51.75	57.72	40.75
utilization rate (%)	89%	99%	70%
Δ in feed rate (%)	——	11%	-21%
naphtha reforming			
capacity (Mb/d)	31.00	31.00	31.00
feed rate (Mb/d)	29.40	32.75	23.22
utilization rate (%)	95%	106%	75%
Δ in feed rate (%)	——	11%	-21%

Current crude rate is the 2010–2012 average of data from RDEIR at 2-35; SMF projects crude rate is proposed Throughput Increase. (Id.) 'No SMF projects' crude rate is from the median year-2045 forecast illustrated in Figure 1 and the conservative assumption that all crude produced by Central Coast OCS, state offshore and onshore oil fields now identified as SMF suppliers will send all crude to the SMF (other plants received 45% of total production from these oil fields during 2010–2012). SMF naptha and gas oil supplied to Rodeo are throughputs reported by the SLOAPCD emission inventory, for all SMF plant naphtha and gas oil product tanks. This SLOAPCD data appear reasonable based on design performance and measurements of similar processes and crude slates as those at the SMF. Rodeo 2014 capacities in b/cd from USEIA (http://www.eia.gov/petroleum/data.cfm); Rodeo feed rates are multi-year averages from SFRWQB NPDES Order R2-2011-0027. Scenario feed rates are based on changes in gas oil (HCU) or naphtha (CRU) feed rate.

** Effects of LPG-rich diluents and harder-to-crack bitumen in tar sands dilbits (not shown in the table) would greatly boost LPG-per-barrel processed in the 'SMF projects' scenario.

CBE-88 cont

LPG producer, LPG available for recovery at the RF would increase proportionately more than this 11%. Recoverable LPG would increase still more from the additional coking (not shown) of 29% more crude feed and, given that tar sands dilbits are the most likely new crude feed, from the LPG-rich diluents in these dilbits (See Fox comments.)

The sum of these increments could boost recoverable LPG at Rodeo from roughly 50% to somewhere around roughly 70% of the proposed project's design capacity. CBE-88 cont

24, In the 'No SMF projects' scenario, SMF crude throughput would rely on terminally declining local/regional crude supplies and would decline as illustrated in Figure 1. A conservative (less steep) estimate of this decline and its effects on processing is described in Table 1 (see caption), for the time frame roughly around 2045, which is within the project duration as the RDEIR acknowledges. SMF-to-RF naphtha and gas oil volumes drop by about half and *total* RF gas oil hydrocracking drops by ≈21%. This is a conservative estimate; if it does not replace its already-declining crude feedstock supply by then, the SMF might more likely be shut down by 2045. (See Figure 1.) CBE-89

25. The Propane Recovery RDEIR has revised its estimate of LPG recoverable in the baseline—among other things, tacitly admitting at least some limitations in current LPG availability—and now asserts a small baseline shortfall below proposed project design capacity ranging from roughly 4–20% of its capacity being idled, depending upon the averaging period chosen. This estimate is not supported by publicly verifiable data, overestimates the baseline by applying maximum conditions as average ones for at least some streams, and further inflates the baseline by including LPG streams that are not feasible to recover in its 'recoverable' estimate.[34] Even if the RDEIR's overestimate is assumed, however, the 21% reduction in gas oil hydrocracking in the 'No SMF projects' scenario and the further LPG supply losses from idled coking and distillation capacity at the SMF could reduce LPG at the RF enough to idle roughly 40–50% of the proposed project capacity. Thus, regardless of the uncertainty driven by still-undisclosed data and debate over the LPG baseline, the proposed project cannot be implemented as designed in the 'No SMF projects' scenario. Therefore, the Rodeo LPG component of the project depends upon the SMF throughput increase and crude by rail components for feedstock. CBE-90

26. Importantly, an otherwise unexplained change in the project description for LPG recovery is informed by the 'SMF project' results for naphtha in Table 1. Naphtha from the Rodeo heavy gas oil hydrocracking unit (Unit 246) and from the HLSD Diesel Hydrotreating Unit (U250) is routed through the proposed new 'fuel gas' hydrotreater in Revised Figure 3-6 of the Propane Recovery RDEIR. These streams were routed through the proposed LPG recovery but *not* the proposed new hydrotreater in Figure 3-6 of the CBE-91

[34] *See* Fox comments.

Propane Recovery DEIR. Further, these U246 and U250 streams are 'wild naphtha' derived at least in part from processing the SMF gas oil ('SMGO;' see Figure 3-4.[35]) Finally, these wild naphtha streams are now fed through other processes to reforming units U231 and U244 (see Figure 3-4), but revised Figure 3-6 shows the project re-routing them to naphtha blending instead. In sum, these naphtha streams are fed to the Rodeo reformers now but the revised LPG recovery proposal would instead route them through the new hydrotreater. For convenient review, Revised Figure 3-6, Figure 3-4 (both from the Propane Recovery RDEIR), and original Figure 3-6 from the June 2013 Propane Recovery DEIR are excerpted below. CBE-91 cont

27. The 'current conditions' and 'SMR projects' results for naphtha reforming in Table 1 are relevant to this project revision because they show that the Rodeo reformers are currently near maximum capacity (95% of 31.0 Mb/d) and would violate this maximum capacity limit if the SMF project components are fully implemented (106% of capacity). Further, the estimate in Table 1 probably underestimates this problem by conservatively assuming none of the expected further increase in naphtha inputs from the diluent in tar sands dilbits, though the throughput increase cannot be implemented without the rail spur, which would most likely tap these price-discounted and LPG-rich oil feeds. In any case, the units probably could not run properly, efficiently *and* safely if run beyond maximum capacity on a sustained basis, and either selling low-value unfinished naphtha into the new shale oil-dominated crude market at a deep discount, or cutting crude rate because of this limitation, could be costly. It also would mean that the throughput increase project could not be fully implemented. Routing some of the naphtha from the SMF to the new hydrotreater instead would relieve the bottleneck while allowing those streams to be part of the finished product slate—and that is what the LPG project revision described in paragraph 26 would do. Thus, the LPG component of the project enables full implementation of the SMF components. CBE-92

[35] *See* also Fox comments.

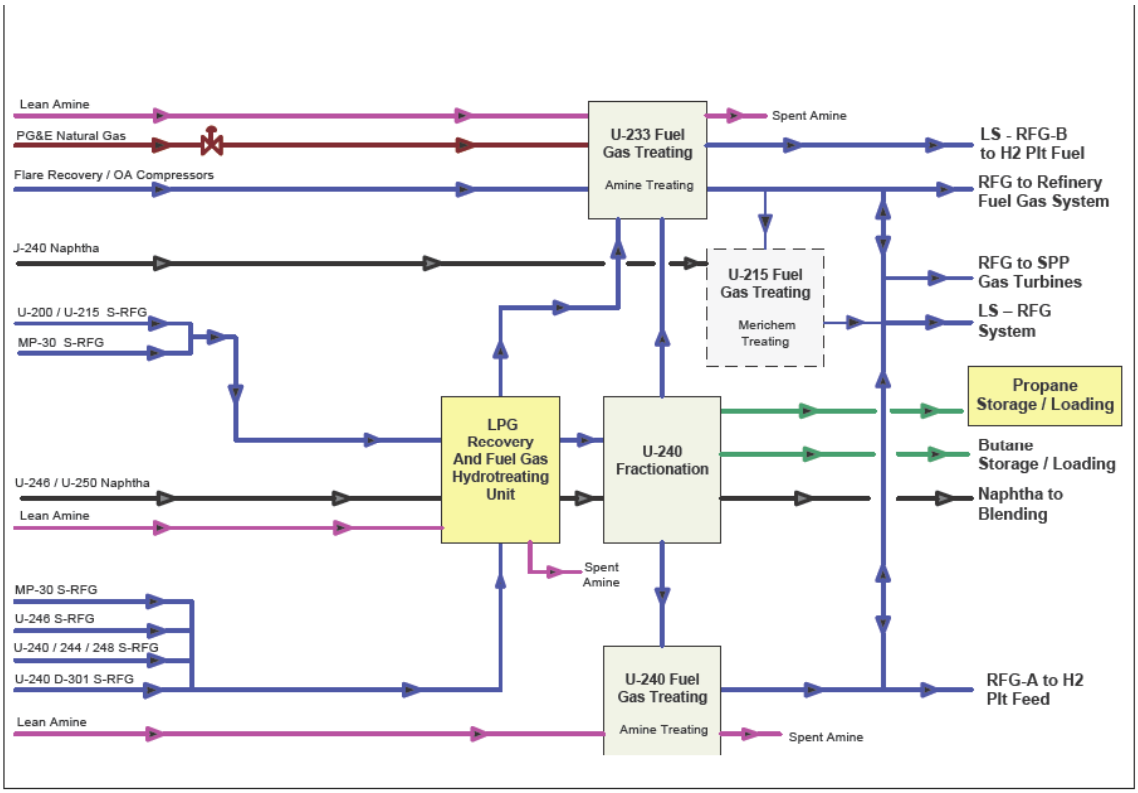

SOURCE: Phillips 66 Company

Phillips 66 Propane Recovery Project . 120546

Figure 3-6 Revised
Proposed Refinery Fuel Gas System Block Flow Diagram

CBE-92 cont

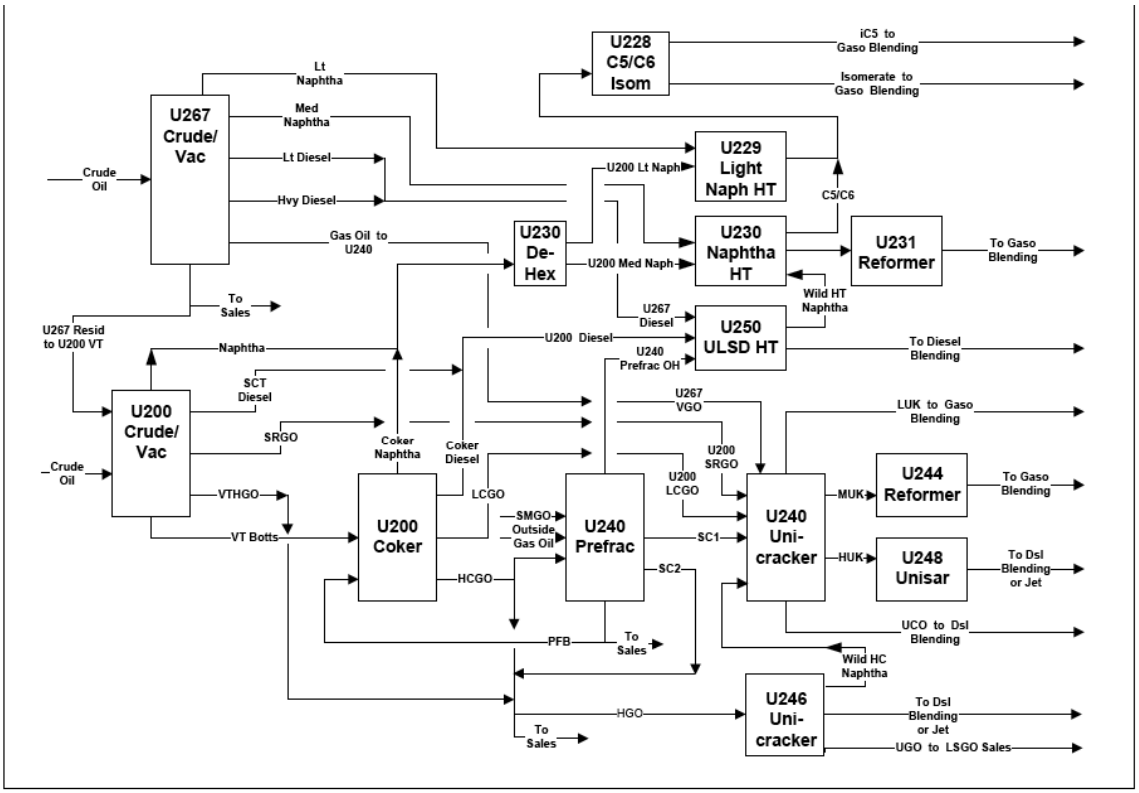

SOURCE: Phillips 66 Company

Phillips 66 Propane Recovery Project . 120546

Figure 3-4
Overall Block Flow Diagram of Refinery

CBE-92 cont

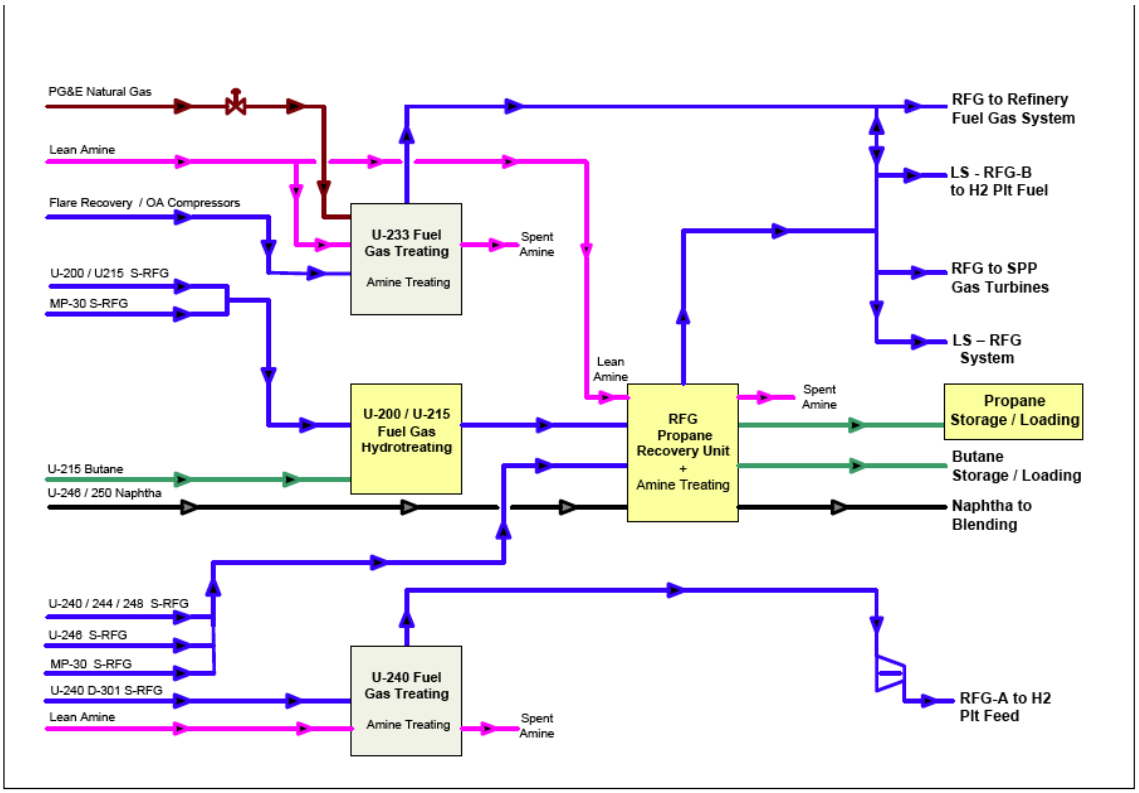

SOURCE: Phillips 66 Company

Phillips 66 Propane Recovery Project . 120546

Figure 3-6
Proposed Refinery Fuel Gas System Block Flow Diagram

CBE-92 cont

28. As discussed in paragraphs 15–27, the San Francisco Refinery's proposed 'projects' in Santa Maria and Rodeo are inextricably interrelated. The Santa Maria throughput increase is dependent upon the proposed crude by rail proposal, the Rodeo hydrotreater/LPG recovery proposal is dependent upon those Santa Maria components, and those throughput increase and crude by rail components are dependent upon the Rodeo component for full project implementation. Therefore, the crude throughput rate increase, crude by rail, and hydrotreating/LPG recovery proposals are interdependent parts of a single project of larger scope that has been piecemealed. CBE-93

29. The failure to evaluate this project as a whole results in underestimating the scope and severity of identified impacts. The greater climate-disrupting emissions, toxic air contaminant emissions, smog-forming emissions, and safety hazards of project crude-by-rail trains to the SMF and LPG-by-rail trains from Rodeo in *combination* on many of the same routes, are examples of this underestimation. It further results in failure to identify some impacts at all, such as the toxic, smog-forming, and climate-disrupting emissions from refining larger volumes of crude feedstock, and those from switching to processing of bitumen oils. These 'tar sands' oils are extremely dense, refractory and contaminated and require substantially more energy, and fuel combustion for that energy, per barrel refined,[36] thereby greatly boosting refinery emissions intensity. Equally important, evaluating the project only one piece at a time results in failure to identify feasible means to lessen or avoid impacts. For example, the switch to tar sands oil that is clear when the project is viewed as a whole would result in significant potential impacts from *refining,* not on the mainline rails, and as the RDEIR insists, the project allows choices among a *range* of oils. Thus, the County clearly *can*—and indeed, *should*—consider choosing to demand that Phillips 66 refrain from the most dangerous and polluting type of oil known. But the RDEIR mentions no such mitigation. In short, the piecemealing of this project is a fundamental flaw in the RDEIR. CBE-94

[36] The RDEIR appears to misinterpret my peer reviewed work in this field. My 2010 paper should not be interpreted to limit the analysis of plant-specific emission potential to oil density and sulfur content alone or to carbon dioxide alone. Rather, it cautions: "Other properties of crude feeds and incremental efficiencies from modernization of equipment and catalyst systems might explain up to 10% of [regional fuel efficiency differences] and could be more important for single plants and nondiverse crude feeds. Burning more fuel to refine lower quality oil emits toxic and ozone-precursor combustion products along with CO_2. Pastor et al. estimate that refinery emissions of such 'co-pollutants' dominate health risk in nearby communities associated with particulate matter emitted by the largest industrial sources of greenhouse gases in California and identify racial disparities in this risk … ." *See* Karras, 2010 (DOI: 10.1021/es1019965).

Cumulative Impacts

30. As stated the rail, throughput increase, and LPG components of the project are interdependent. (Paragraphs 15–29.) But even if the County does not believe that the project has been piecemealed, its components are related projects. Impacts from increased crude *and* LPG rail traffic emissions and hazard, increased throughput-driven emissions from *both* facilities, climate emissions from the plants *and* rail projects, new propane tank explosion *and* crude derailment hazards as SMF trains pass the Rodeo LPG spur, and many other such cumulative impacts should be analyzed. The RDEIR fails to include this analysis on multiple counts. CBE-95

31. The RDEIR does not appear to mention the proposed ERG Foxen Petroleum Pipeline that is in CEQA review now, and fails to evaluate potential cumulative impacts of the project with this project that would pipe oil from the nearby Cat Canyon oil field. Cat Canyon currently supplies some of the SMF crude feed. In a CEQA document that states the Foxen oil pipeline would interconnect with Phillips' pipeline, Santa Barbara County has identified a cumulative impact of that project with the SMF rail spur:

> "There are several industrial and oil development projects proposed in the South Central Coast Air Basin. These projects are individually likely to have significant air quality impacts or to cause changes in the operations associated with existing oil and gas production within the area.
>
> The proposed Phillips 66 Rail Spur project would enable the Santa Maria Refinery (SMR; in San Luis Obispo County) to import crude oil from out-of-state sources. A number of area producers use the Phillips 66 pipeline system to transport crude oil to the SMR. These include the Pt. Pedernales, Pt. Arguello, Santa Ynez Unit and the Ellwood Field offshore production; the Lompoc and Orcutt onshore oil and gas fields; and the Cat Canyon field (of which the proposed Project is a part). The Pt. Arguello, Santa Ynez Units and the Ellwood Field offshore production all have the capability to transport crude oil either to the SMR or to refineries in Los Angeles through the All American Pipeline system. The other producers do not have pipeline options for delivery of their crude oil to Bakersfield or Los Angeles area refining destinations. CBE-96
>
> In 2012, the SMR had about 11,000 bpd of excess refining capacity available. If the SMR were to decide, through market forces, to satisfy all of the excess capacity through rail shipments instead of from local producers, then the local producers would have no option except to truck their crude oil to other refineries, or shut down production. Under this scenario, the advantages of the proposed Project, i.e. reduced trauma risks and air quality impacts associated with the full production scenario (25,000 bbls/day), would not be realized.

> Another option would be for the Phillips 66 pipeline connection from the All American pipeline to the SMPS to be reversed, allowing local producers to ship their crude oil via pipeline from area sources to Los Angeles via pipeline. A project proposed in 2002 to reverse the pipeline segment was approved and issued a permit, but the permit subsequently expired and the pipeline was never reversed. A reversal of the pipeline flow direction would allow production from area producers to be transported to area markets via pipeline instead of by truck if the SMR is not available, thereby allowing the benefits of the proposed Project to be realized.
>
> There are also limits on the amount of crude oil that can be received and transported through the SMPS. According to the Santa Barbara County APCD permits (PTO 08218r8, 11754r2), the SMPS has a permit throughput limit of 26,000 bpd that could be unloaded by truck at the Santa Maria Pump Station, and a pipeline throughput capacity of 84,000 bpd as per County permit 91-DP-003. Therefore, truck transportation of the full production scenario from the proposed Project to the SMPS (as under the Emergency Operations scenario) may not be possible as trucks may not be able to unload the full amount without displacing other fields' production.
>
> In summary, the scenario exists that local producers may have to transport their crude oil via truck to markets other than the SMR. This would increase air emissions associated with trucking the crude oil a farther distance or trucking as opposed to pipeline transportation. This could result in a significant cumulative impact.
>
> ERG Foxen Petroleum Pipeline DEIR, SCH #2013061011 (Sep 2014) at 4.3-19

CBE-96 cont

32. The RDEIR does not identify or evaluate any potential impacts—direct, indirect, project-related, or cumulative—associated with barge-to-port-to rail delivery of crude to the proposed SMF rail unloading facilities. In particular, the new Kinder Morgan crude by rail terminal in Richmond, CA, is adjacent to both the Chevron refinery and the Richmond Port, and is aligned with a crude-by-rail route the RDEIR states would be used by the project. Although the Kinder Morgan terminal and Richmond refinery are essentially contiguous, Chevron is prohibited by permit from receiving crude oil from the Kinder Morgan facility. The RDEIR fails to include this crude by rail project in its cumulative impact analysis, does not say whether crude delivered by rail to the SMF might be loaded at the Kinder Morgan terminal, Richmond's port, or both and in fact, appears to provide no information at all about the Kinder Morgan rail terminal.

CBE-97

Alternatives

33. In my opinion, the 'No Project Alternative' would lessen or avoid a commitment to significant and irreversible impacts associated with the project as proposed and would substantially reduce ongoing impacts relative to current conditions. For example, it could reduce the potential for irreversible loss of local groundwater uses to salt intrusion from overdraft in climate-related droughts as sea level rises. In another example, it would avoid an irreversible commitment to limited fossil fuel resources from an energy and climate standpoint. The No Project Alternative could avoid 24–43 million tonnes of petroleum combustion carbon over the expected project duration. Based on international consensus (IPCC AR5) that only another trillion tonnes of carbon dioxide can be emitted and still give society a better-than-even chance of stabilizing global mean temperature at 2 ºC, 2050 world population, and assuming this burden shared equally, that could avoid emissions equivalent to the lifetime CO_2 allowance of 0.8–1.5 million people. CBE-97 cont

34. I have given my opinions on these matters based on my knowledge, experience and expertise and the data, information and analysis discussed in this report. CBE-98

I declare under penalty of perjury that the foregoing is true of my own knowledge, except as to those matters stated on information and belief, and as to those matters, I believe them to be true.

Executed this _**24th**_ day of November 2014 at Oakland, California

Greg Karras

CBE-72	This comment introduces the author of the Expert Report of Greg Karras and therefore does not identify a specific environmental analysis or CEQA issue relative to the EIR and compliance with CEQA. No further response is required.
CBE-73	The Applicant's project description limited to number of trains unloaded at the SMR to a maximum of 250 per year, and a maximum of five trains per week. Given that only five trains per week would be delivering crude to the SMR, a reasonable assumption was that on any given calendar day one train would be offloaded at the SMR. With the delivery of five unit trains per week the average daily delivery of crude oil would be 37,142 barrels, which is less than the SLO Planning Department permitted capacity of 44,500 barrels per day, and less than the Throughput Increase capacity of 48,950 barrels per day. The additional crude need to reach the capacity of the SMR would need to be delivered to the refinery via the existing pipeline system. As discussed in the Project Description (Chapter 2.0) Phillips 66 expects to continue to receive, blend and process a comparable range of crudes in the future, and will select future crude to be delivered by rail based upon a number of factors including availability, suitability, and economics. If approved by the County, the project would be conditioned to limit the number of trains that could be unloaded at the SMR to 250 annually, five per week, and one per calendar day.
CBE-74	This comment is not related to the adequacy of the EIR, but rather just states facts about the project description. The comment that tar sands would be the likely dominate new crude source is accurate. No further response is required.
CBE-75	The RDEIR states that in the long-term, the need for the SMR rail project could be driven by declines in local production of crude oil that can be delivered by pipeline. As discussed in Comment CBE-06, the impact analysis of changes in crude slate at the refinery was based upon all tar sands processing, which is a worst case assumption. This is particularly true since the rail project would only be capable of delivering an average of 37,142 barrels per day, which is less than the capacity of the SMR (see Response CBE-73). The RDEIR fully discloses the fact that up to an average of 37,142 barrels per day could be delivered to the SMR via the rail project and that the most likely crude source would be tar sands.
CBE-76	The statement in the RDEIR that the ability of the SMR to operate at the maximum approved throughput level is based on the existing infrastructure and is not dependent on, or related to, the SMR rail project is an accurate statement. As shown in Table 2.7 of the RDEIR, the 2013 average throughput of the refinery was 41,635 barrels per day. The SMR has the ability to unload crude

	oil from trucks at the Santa Maria Pump Station (SMPS) where it is then moved via pipeline to the refinery. The current permitted limit on crude truck unloading at the SMPS is 26,000 barrels per day. As discussed in Section 5.1.1 (No Project Alternative), the current truck unloading rate at the SMPS is about 6,800 barrels per day. Therefore, an additional 19,200 barrels per day (26,000-6,800) could be shipped via truck to the SMPS for unloading and then moved via pipeline to the SMR. This additional 19,200 barrels of oil would increase the 2013 average daily throughput at the SMR to over 60,000 barrels per day, which is greater than the current permitted capacity of the refinery or the capacity of the refinery that would be allowed even under the Throughput Increase Project. Whether or not Phillips 66 chooses to use this available crude oil delivery capacity would be based upon economic factors. As discussed in the Project Description (Chapter 2.0), crude delivered by rail may have an economic advantage over other local sources of crude, which could make them more attractive. There are also other potential sources of local crude that could be available in the future to the SMR. As discussed in Section 2.7 of the RDEIR, there are a number of onshore oil development projects in northern Santa Barbara County that are being proposed that if approved could replace some of this lost production. In addition, the Arroyo Grande Oil Field (AGOF) has applied to the County of San Luis Obispo to increase production to 10,000 barrels per day. The County recently approved a project that would allow the oil from the AGOF to be moved via pipeline to the SMR (the oil production from the AGOF currently is trucked to the SMPS for delivery via pipeline to the SMR). If this project is approved it would increase the production from the AGOF by about 8,000 barrels.
CBE-77	Section 15002 of the CEQA Guidelines states that one of the basic purposes of CEQA is to inform governmental decision makers and the public about the potential, significant environmental effects of proposed activities. In this case, the proposed activities are the delivery of crude to the SMR via rail. In order to assesses the environmental impacts of the Rail Spur Project the EIR did not need to conduct an analysis of the current crude supply to the SMR or what crudes could be displaced if crude is delivered by rail. The EIR (see Section 2.6) did discuss the current sources of crude to the SMR. The EIR (see Chapter 2.0, Project Description) acknowledges that in the short-term, depending upon the volume of crude oil received by rail, some of the oil delivered via pipeline or via truck to the Santa Maria Pump Station could be displaced. The proposed crude by rail project is to deliver up to 250 unit trains per year. That does not mean that all 250 unit trains per year would actually be received by the SMR. This just set an upper limit and was the limit evaluated in the EIR. Any displaced crude oil would likely be sold to other refineries in the Los Angeles or Bay areas. The amount, location, and destination of any displaced

	oil would be driven by market forces. Given the dynamics of the crude oil market, it is speculative as to what if any local crude oil would be displaced, and what would happen to any oil if it were displaced. The EIR did not need to analyze year-on-year production data from other fields in California in order to assess the impacts of the proposed Rail Spur Project. The EIR assesses the impacts of the delivery of up to 250 unit train per year, which would represent the reasonable worst case.
CBE-78	An EIR is required to assess the environmental impacts of the project against the environmental setting (i.e., baseline) This environmental setting will normally constitute the baseline physical conditions by which a lead agency determines whether an impact is significant. The environmental setting is the physical environmental conditions in the vicinity of the project, as they exist at the time the notice of preparation is published (CEQA Guidelines Section 15215), not some future condition as the comment implies. Chapter 2.0 (Project Description) acknowledges that in the long-term, the need for the SMR rail project could be driven by declines in local production of crude oil that can be delivered by pipeline. However, based upon the baseline conditions, adequate crude currently exists for the SMR (see Response CBE-75). The issue of long-term crude supply to the SMR from local sources is very speculative. It is unknown what local crude oil development projects could occur in the future. The commenter attempted to estimate future production through the year 2050 from local onshore and offshore fields that currently supply crude to the SMR based upon historic trends of production decline. In 2050 the upper end of this range is about 30,000 barrels per day. With the addition of 26,000 barrels per day that can be delivered by truck to the Santa Maria Refinery the upper end of the available crude supply would be 56,000 barrels per day, which is greater than the current permitted capacity of the SMR, and the capacity under the Increased Throughput Project. While the estimated future oil production from local sources is not relevant to the assessment of impact of the Rail Spur Project for the reasons stated above, the forecast range does not take into account proposed new oil development projects. For example, the Arroyo Grande Oil Field (AGOF) in San Luis Obispo has applied to the County to increase production to 10,000 barrels per day. If this project is approved it would increase the production from the AGOF by about 8,000 barrels, which would all go to the SMR. There are a number of other oil development projects currently proposed in northern Santa Barbara County that could add an additional 23,000 barrels per day of oil production that could be transported to the SMR. These include projects such as Santa Maria Energy, which could move 3,000 barrels per day via pipeline to the SMR, Pacific Coast Energy, which could move 3,600 barrels per day to the SMR via pipeline, ERG Cat Canyon, which could move 5,000 barrels per day

	via pipeline to the SMR, the PetroRock development, which could move 1,600 barrels per day, and the Aera Energy Cat Canyon Project that could add 10,000 barrels per day. A listing from Santa Barbra County shows a total of 943 oil production wells in various phases of development, all of which could provide oil to the SMR. While some of these projects state that the oil will move to the SMR, some do not. For example the Aera Energy Project will truck oil to various customers. A May 2014 report by the United States Energy Information Administration (EIA) estimated that as much as 13.7 billion barrels of oil may be recoverable from the Monterey Shale, of which some of this shale formation is in northern Santa Barbara County and Southern San Luis Obispo County. While it is unknown, when and if any of these reserves would be developed (and in what quantity), they could in, the future, provide local crude supply to the SMR. It is also possible in the future that the portions of the All American Pipeline between the Sisquoc Pump Station and Kern County could be reversed to allow crude oil to move to the Sisquoc pipeline. This portion of the All American Pipeline that connects to the Sisquoc Pipeline is current used to move only OCS crude from Southern Santa Barbara County to the Kern County and then on to refinery destination in the Bay Area and Los Angeles. When OCS production reaches a level where it does not make economic sense to operate this portion of the All American Pipeline, it could be reversed to move crude oil from the Kern County to the SMR. This would provide the SMR with access to other sources of crude. If and when this would happen is unknown and speculative, but it is a potential future option for obtaining crude for the SMR. The point of this discussion is to show that there are potential options in the future for the SMR to obtain crude oil without the rail project, however, they are unknown, and as with all crude supply issues, would be determined based upon market forces, including the future price of crude oil. This point can be illustrated by the past history of the crude supply at the SMR. In the 1970's the SMR did not receive any crude from offshore Santa Barbara County since none of this crude had been developed. With the development of the offshore crude, pipelines were built that allowed the SMR to receive this crude source. Now offshore crude from Santa Barbara is a major source of crude for the SMR. As this source of crude declines, it is likely that other sources of crude will become available to the SMR as discussed above. This would occur with or without the Rail Spur Project. What future crude is processed at the SMR will depend upon economic and market factors. Therefore, it would be speculative at best to estimate when the local crude supply would not be sufficient to support further operation of the SMR without the proposed Rail Spur Project.
CBE-79	See Response CBE-78.

CBE-80	This is a general comment and refers to comment below. No further response to this comments in required. The issues raised in this comment are addressed in Responses CBE-82 through CBE-94 below.
CBE-81	This comment is just a general statement about the relationship between the SMR and the Phillips Rodeo Refinery (i.e., SFR). Chapter 2.0, Project Description, acknowledges the relationship between these two refineries. The EIR states gas oil and naphtha recovered as part of the distillation and coking processes are shipped by pipeline to the Phillips Rodeo Refinery in the San Francisco Bay area for processing into gasoline, diesel fuel, and other petroleum end-use products.
CBE-82	This comment is just a general statement about the relationship between the SMR and the Phillips Rodeo Refinery (SFR). Chapter 2.0, Project Description, acknowledges the relationship between these two refineries. The comment makes the point that the SFR is dependent upon the SMR since it receives gas oil and naphtha that it used to produce finished products such as gasoline, diesel fuel and jet fuel. The EIR states gas oil and naphtha recovered as part of the distillation and coking processes are shipped by pipeline to the Phillips Rodeo Refinery in the San Francisco Bay area for processing into gasoline, diesel fuel, and other petroleum end-use products (See Chapter 2.0, Project Description). The statement in the comment that crude delivery and upgrading via the SMR—the only other way the SFR receives crude—is a substantial portion (≈38.0 Mb/d) of its total crude supply is an inaccurate statement. The SMR does not ship any crude oil to the SFR. The SMR only ships gas oil and naphtha, which are intermediate products. The comment tries to build the case that without the Rail Spur Project at the SMR, the amount of intermediate product that could be shipped from the SMR to the SFR would decline overtime. This would reduce the amount of intermediate products that could be processed at the SFR. This is all based upon the assumption that without the proposed Rail Spur Project the SMR could not obtain adequate crude supplies. As shown in Table 2.7 of the RDEIR, the 2013 average throughput of the refinery was 41,635 barrels per day. The SMR has the ability to unload crude oil from trucks at the Santa Maria Pump Station (SMPS) where it is then moved via pipeline to the refinery. The current permitted limit on crude truck unloading at the SMPS is 26,000 barrels per day. As discussed in Section 5.1.1 (No Project Alternative), the current truck unloading rate at the SMPS is about 6,800 barrels per day. Therefore, an additional 19,200 barrels per day (26,000-6,800) could be shipped via truck to the SMPS for unloading and then moved via pipeline to the SMR. This additional 19,200 barrels of oil would increase the 2013 average daily throughput at the SMR to over 60,000 barrels per day, which is greater than the current permitted capacity of the refinery or the capacity of the refinery that would be allowed even under the Throughput Increase Project.

	There are also other potential sources of local crude that could be available in the future to the SMR. As discussed in Section 2.7 of the RDEIR, there are a number of onshore oil development projects in northern Santa Barbara County that are being proposed that if approved could replace some of this lost production. In addition, the Arroyo Grande Oil Field (AGOF) has applied to the County of San Luis Obispo to increase production to 10,000 barrels per day. The County recently approved a project that would allow the oil from the AGOF to be moved via pipeline to the SMR (the oil production from the AGOF currently is trucked to the SMPS for delivery via pipeline to the SMR). If this project is approved it would increase the production from the AGOF by about 8,000 barrels. As discussed in Response CBE-78, there are potential options in the future for the SMR to obtain crude oil without the rail project, however, they are unknown, and as with all crude supply issues, would be determined based upon market forces, including the future price of crude oil. Therefore, it would be speculative at best to estimate when the crude supply would not be sufficient to support the further operation of the SMR without the proposed Rail Spur Project. See Response CBE-78 for more discussion of crude oil supplies.
CBE-83	See Responses CBE-76 and CBE-78.
CBE-84 and CBE-85	The Rodeo Refinery (SFR) produces gases as a byproduct of the refining process, and these gases are used as fuel in various refinery processes (referred to as "refinery fuel gas" or "RFG"). Currently, the propane and part of the butane generated at the SFR is used as RFG. Instead of using the propane and butane as fuel at the SFR, the Propane Recovery Project will allow Phillips 66 to recover, store, and ship propane and additional butane via rail to outside customers. Therefore, the primary project objective is to recover liquid petroleum gases ("LPGs" *i.e.*, propane and butane) that already exist in the RFG. The Propane Recovery Project will not cause or require an increase in the amount of recoverable LPG present in the RFG; it will simply allow recovery of the LPGs that already are present in the RFG. The Propane Recovery Project is designed to remove up to 14,500 barrels of LPGs per day. Data regarding actual LPG content of the RFG is consistent with the design basis for the project. The figure below shows that, for the twelve month period from January through December 2013, the average LPGs in the Rodeo RFG was 13,970 barrels per day. The equipment design is a limiting factor on the amount of propane and butane that can be captured and stored, regardless of how much propane and butane can be produced by the SFR in the future or what type of crude oil is processed. Phillips 66 specified this design basis in the application to the Bay Area Air Quality Management District for an authority to construct the Propane Recovery Project, and it has been translated into an enforceable condition included in the draft permit prepared by the air district. Therefore, the amount

of propane and butane to be extracted once the Propane Recovery Project is operational will be constrained by the physical design of the equipment and the permit limits.

Most of the LPG produced at the SFR does not arrive as propane and butane in crude oil or in the semi-refined products received from the Santa Maria Refinery (SMR). Rather, the vast majority of LPG produced at the SFR is created through the refining process itself. As explained above, the design capacity of the Rodeo Propane Recovery Project was sized to recover LPGs that are currently being produced and burned as part of the refinery fuel gas at the SFR. No changes in the crude delivery system, type of crude or operations at the SMR are needed in order to fully utilize the propane recovery unit in Rodeo.

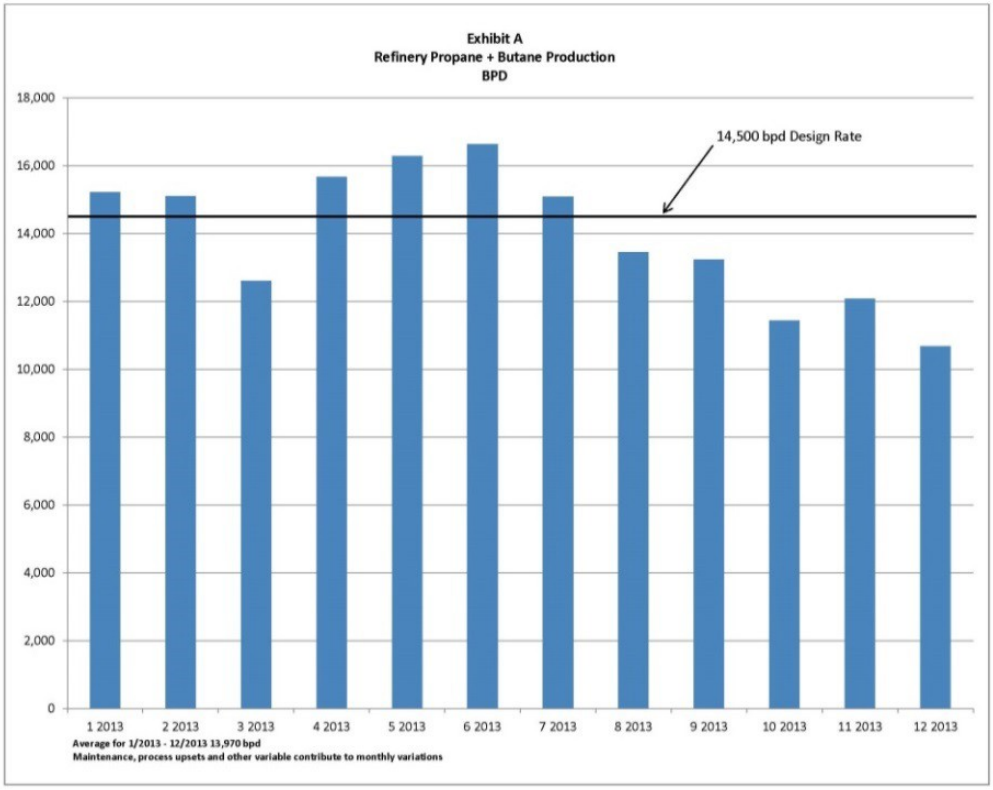

The commenter's observe that there is very little butane or propane in the crude oil delivered to the Santa Maria and Rodeo Refineries. This statement is correct. However, they then conclude that, without a change to LPG-rich crudes, vast increases in the crude runs would be needed to obtain the volumes of LPG that the Rodeo Propane Recovery Project aims to recover. This conclusion is incorrect.

The commenter's have overlooked the fact that the refining process at the SFR

	itself accounts for 90% of the propane and butane currently produced and proposed to be recovered by the Rodeo Propane Recovery Project. As described at pages 3-8 to 3-9 of the Recirculated Draft Environmental Impact Report for the Propane Recovery Project, the refining process incorporates four primary functions: separation, conversion, purification and blending. Crude oil and other incoming feed streams contain mixtures of various hydrocarbon compounds that can be separated using distillation and fractionation in the first step of the refining process. At the SFR, a small amount of butane and propane is separated from the crude oil in these first stage processes. However, butane and propane are also created from other hydrocarbon compounds during the conversion phase of the refining process. Overall approximately ten percent of the LPG (combined butane and propane) arrives as identifiable fractions of the crude oil, and the balance of approximately ninety percent is created in the refining processes (cracking units). Since LPG in the crude oil accounts for only a very small fraction (approximately ten percent) of the total LPG produced at the SFR, a change in crude oil LPG content in Santa Maria or in Rodeo would have very little effect on the volume of LPG available for recovery at Rodeo. As discussed in the Recirculated Draft Environmental Impact Report for the Propane Recovery Project Section 3.4.2.1, and shown in Figure 3-7, the proposed Project's design basis was derived from data taken at the Refinery in August, 2011. In the same section, the RDEIR for the Propane Recovery Project also provides an update to substantiate this 2011 design basis with the most recent full year (2013) of RFG data from the Refinery in Figure 3-8. This figure shows that for 2013 an average of 13,970 barrels per day (BPD) of propane and butane were available and that this quantity of propane and butane varies monthly. These data provide the substantial evidence to support the "independent utility" of this Project and further support that the EIR has not inappropriately piecemealed or segmented this Project. Phillips 66 applied for a modification to the SMR's County Land Use Permit in 2010 to increase the refinery's daily throughput limit from 44,000 barrels per day to approximately 48,000 barrels per day. The sequence of design and permitting activities for the various projects demonstrates that the Throughput Increase Project did not create a need for the Rodeo Propane Recovery Project. The Throughput Increase Project was approved by San Luis Obispo County in 2013, and the Propane Recovery Project was sized according to SFR data in August 2011. This data was gathered two years before the Throughput Increase Project was approved, demonstrating that sufficient LPGs are present in the Rodeo RFG to justify the Propane Recovery Project without regard to the Santa Maria Throughput Increase Project, which increase only began in late March 2015. The size of the Propane Recovery Project is not related to and is completely independent from SMR's throughput ability and permit limits.

As discussed in the Project Description (Chapter 2.0) the SMR currently processes a range of crude oils from different sources, and the crudes vary from time to time. In addition, the refinery often blends crudes from multiple sources prior to processing. A comparison of crude oils and their characteristics demonstrates that the crudes likely to be received by unit train would be comparable to those currently or recently processed at the SMR. The SMR is not requesting any changes or modifications to its crude unit or other processing units that would allow it to process any crude types that it cannot process currently.

The table below presents a reasonable representation of the LPG content of the crude oils that would be delivered by rail. This shows that the level of LPG in the crudes that would be delivered by rail would have similar or lower levels of LPG then the typical crude blend that is currently processed at the SMR. Most of the propane and butane in the crude that is processed at the SMR ends up in the refinery fuel gas. This is no different than what was discussed above for the SFR. The table below shows the typical composition of the refinery fuel gas for the SMR.

LPG Content of Current and Potential Future Crude Oils at the Santa Maria Refinery

Property	Unit of Measure	Current SMR Operations		Potential Crude by Rail Sources	
		Typical Crude Blend	Range of Major Crude Sources	Access Western Blend	Peace River Heavy
LPG Content	Volume %	0.9	0-1.0	0.73	0.89

1. Range of major crudes represent the major sources of current crudes to the refinery and include a number of OCS, local onshore, and trucked crude sources.
2. Both potential crudes by rail are Canadian.
3. LPG-Liquid Petroleum Gases, which includes Propane and Butane.
4. Access Western Blend five year average from http://www.crudemonitor.ca/crude.php?acr=AWB
5. Peace River Heavy five year average from http://www.crudemonitor.ca/crude.php?acr=PH
6. Current SMR Operations data from Phillips 66, 2015.

Composition of Refinery Fuel Gas at the SMR

Component/ Property	Value
Heating Value	1,498.3 BTU/scf
Hydrogen	9.03 mole %
Methane	47.15 mole %
Ethane	17.59 mole %
Propane	11.13 mole %
Propylene	3.88 mole %
Butane	7.68 mole %

Source: Phillips 66, 2015.

This table shows that the majority of the propane and butane in the crude oil ends up in the refinery fuel gas and not in the gas oils and naphtha shipped to the SFR via pipeline.

<table>
<tr><td></td><td>The commenter asserts that the Rail Spur Extension Project will result in a change to Canadian heavy diluted crude at the SMR, which in turn will overload the existing Rodeo LPG recovery systems and, therefore, the Rodeo Propane Recovery Project is required to support the Santa Maria Rail Spur Project. These conclusions are incorrect. As noted above, the Rail Spur Project at the SMR is not expected to result in crude blends with LPG content outside the range of historical and existing crudes. In addition, the coker and hydrocracker feed rates are currently operating at or near their permitted capacities as specified in the Title V Operating Permit, and the proposed Rail Spur Project does not propose to change the capacities of these units.

Based upon the substantial evidence presented above, the proposed Rail Spur Project at the SMR is not a driver in the Propane Recovery Project at the SFR, and therefore, the projects are not being piecemealed.</td></tr>
<tr><td>CBE-86</td><td>Permits issued by the San Joaquin Valley Air Pollution Control District effectively prevent a substantial increase in the LPG content of the material transported via the pipeline from the SMR to the SFR. All material shipped from the SMR to the SFR must first travel eastward through Line 400 to the Junction Station, where Line 400 intersects with Lines 100 and 200. From Junction Station northward to the SFR, the pipeline is used to ship a variety of materials. To minimize unintentional mixing of different materials, they are transported in batches. Therefore, all semi-refined products from the SMR are delivered into large above ground storage tanks until they can be sent in batches to the SFR. In addition, select materials from the SMR are blended with crude oil coming from oil production fields to the south, and the blending occurs in the above ground storage tanks at the Junction Station.

Operation of the Junction Station storage tanks is authorized by the San Joaquin Valley Air Pollution Control District, and permits issued by that agency limit the vapor pressure of the materials stored in the tanks. The relevant permits and the vapor pressure limits are listed in the table below.

<table>
<tr><th colspan="4">San Joaquin Valley APCD Permits for Junction Station Tanks</th></tr>
<tr><th>Tank #</th><th>Permit #</th><th>Product</th><th>True Vapor Pressure (psia)</th></tr>
<tr><td>40010</td><td>(S-1518-8-3)</td><td>Naphtha</td><td>11.00</td></tr>
<tr><td>80018</td><td>(S-1518-1-4)</td><td>Naphtha</td><td>10.99</td></tr>
<tr><td>110020</td><td>(S-1518-7-3)</td><td>Gas Oil</td><td>11.00</td></tr>
<tr><td>110022</td><td>(S-1518-2-2)</td><td>San Joaquin Valley Heavy Crude</td><td>11.00</td></tr>
<tr><td>110024</td><td>(S-1518-5-3)</td><td>Elk Hills Crude</td><td>11.00</td></tr>
<tr><td>1100026</td><td>(S-1518-31-2)</td><td>San Joaquin Valley Heavy Crude</td><td>11.00</td></tr>
<tr><td colspan="4">Source: San Joaquin Valley APCD Air Permits.</td></tr>
</table>

Phillips 66 must ensure that the material in the tanks does not exceed the specified vapor pressure limit. LPGs are highly volatile compounds with a vapor pressure that ranges from 30 to 120 psi at 68º F and 50 to 190 psi at 100º F. True vapor pressure depends upon the actual storage temperature, and will</td></tr>
</table>

	be higher under hot summer conditions in the San Joaquin Valley. As such, a very small amount of additional LPGs in the products coming from the SMR could cause a substantial increase in true vapor pressure of the material stored in the tanks at Junction Station, resulting in an exceedance of the vapor pressure limit in the permit. Therefore, even if there were an increase in LPGs delivered to or produced by the SMR (which there is not as discussed above on Response CBE-84), this would not affect operations at the SFR or require or affect the Rodeo Refinery Propane Recovery Project. The storage tank vapor pressure limits act as a constraint regarding the amount of butane and propane that can be included in the partially refined products sent to the SFR. The issue that gas oils and naphtha sent from the SMR to the SFR would produce more LPG at the SFR during processing is discussed below in Response CBE-111.
CBE-87 through CBE-92	These six comments deal with the assertion that without the Rail Spur Project, the amount of crude oil the SMR would process in 2045 would decline by 53 percent from the 2010 to 2012 average. This decline in crude processed at the SMR would result in an equal decline in naphtha and gas oil shipped and processed at the SFR. The comments also assert that all of the increase in crude oil processed by the SMR above and beyond the 2010-2012 averages would be due to crude delivered by rail. The comment tries to build the case that without the Rail Spur Project at the SMR, the amount of intermediate product that could be shipped from the SMR to the SFR would decline overtime. This would reduce the amount of intermediate products that could be processed at the SFR. These assertions are speculative and do not take into account the fact that additional crude sources are available for the SMR even without the Rail Spur Project. As stated in the RDEIR, the ability of the SMR to operate at the maximum approved throughput level is based on the existing infrastructure and is not dependent on, or related to, the SMR rail project. As shown in Table 2.7 of the RDEIR, the 2013 average throughput of the refinery was 41,635 barrels per day. The SMR has the ability to unload crude oil from trucks at the Santa Maria Pump Station (SMPS) where it is then moved via pipeline to the refinery. The current permitted limit on crude truck unloading at the SMPS is 26,000 barrels per day. As discussed in Section 5.1.1 (No Project Alternative), the current truck unloading rate at the SMPS is about 6,800 barrels per day. Therefore, an additional 19,200 barrels per day (26,000-6,800=19,200) could be shipped via truck to the SMPS for unloading and then moved via pipeline to the SMR. This additional 19,200 barrels of oil would increase the 2013 average daily throughput at the SMR to over 60,000 barrels per day, which is greater than the current permitted capacity of the refinery or the capacity of the refinery that

	would be allowed even under the Throughput Increase Project. Therefore, clearly the SMR has the available existing infrastructure and could obtain crude supplies to operate at the full permitted capacity with or without the Rail Spur Project. This fact is even supported by the data provided in comment CBE-78. Table 1 in comment CBE-78 estimated that the local supply of crude oil in 2012 was 67,100 barrels per day. If one includes the available truck unloading capacity at the SMPS, this total would be 93,100 barrels per day, which is well above the permitted capacity of the SMR. With regard to the long-term future supply of crude oil to the SMR without the Rail Spur Project, there are also other potential sources of local crude that could be available in the future to the SMR. As discussed in Section 2.7 of the RDEIR, there are a number of onshore oil development projects in northern Santa Barbara County that are being proposed that if approved could replace some of this lost production. In addition, the Arroyo Grande Oil Field (AGOF) has applied to the County of San Luis Obispo to increase production to 10,000 barrels per day. The County recently approved a project that would allow the oil from the AGOF to be moved via pipeline to the SMR (the oil production from the AGOF currently is trucked to the SMPS for delivery via pipeline to the SMR). If this project is approved it would increase the production from the AGOF by about 8,000 barrels. As discussed in Response CBE-78, there are potential options in the future for the SMR to obtain crude oil without the rail project, however, they are unknown, and as with all crude supply issues, would be determined based upon market forces, including the future price of crude oil. See Response CBE-78 for more discussion of crude oil supplies. With regard to the statement in the comment about LPG rich diluents in the dilbit crude, the data provided in the table in Response to CBE-11 shows that the estimated LPG content of the crude that would be delivered by rail would be very similar to what is currently being processed at the SMR. See Responses CBE-84 and 85 and CBE-111 for more on this issue of LPG generated from a change in crude oil.
CBE-93	The Rodeo Refinery Propane Recovery Project, Throughput Increase Project and the Rail Spur Project are not inextricably linked to each other as stated in the comments. The premise that they are linked is based upon the faulty assumption that without the Rail Spur Project the SMR could not achieve and maintain their permitted operating capacity. As discussed in Response CBE-76, the current infrastructure and available crude supply would allow as much as 60,000 barrels per day to be delivered to the SMR (see Response CBE-76). This is greater than the current permitted capacity of the refinery or the capacity of the refinery that would be allowed even under the Throughput Increase Project. This fact is even supported by the data provided in comment CBE-78. Table 1 in comment CBE-78 estimated that the local supply of crude oil in 2012 was

	67,100 barrels per day. If one includes the available truck unloading capacity at the SMPS, this total would be 93,100 barrels per day, which is well above the permitted capacity of the SMR (see Response to CBE-87). Whether or not Phillips 66 chooses to use this available crude oil delivery capacity would be based upon economic factors. As discussed in the Project Description (Chapter 2.0), crude delivered by rail may have an economic advantage over other local sources of crude, which could make them more attractive. With regard to the long-term future supply of crude oil to the SMR without the Rail Spur Project, there are also other potential sources of local crude that could be available in the future to the SMR. As discussed in Section 2.7 of the RDEIR, there are a number of onshore oil development projects in northern Santa Barbara County that are being proposed that if approved could replace some of this lost production. In addition, the Arroyo Grande Oil Field (AGOF) has applied to the County of San Luis Obispo to increase production to 10,000 barrels per day. The County recently approved a project that would allow the oil from the AGOF to be moved via pipeline to the SMR (the oil production from the AGOF currently is trucked to the SMPS for delivery via pipeline to the SMR). If this project is approved it would increase the production from the AGOF by about 8,000 barrels. As discussed in Response CBE-78, there are potential options in the future for the SMR to obtain crude oil without the rail project, however, they are unknown, and as with all crude supply issues, would be determined based upon market forces, including the future price of crude oil. See Response CBE-78 for more discussion of crude oil supplies. Under CEQA, a "project" subject to environmental review must be the "whole of an action." (CEQA Guidelines Section 15378(a).) This CEQA rule of analysis serves to assure that a large project is not chopped up into many smaller ones, resulting in piecemealing or segmenting of environmental review and masking the full scope of project impacts. Put another way, "a narrow view of a project could result in…overlooking its cumulative impact by separately focusing on isolated parts of the whole." (*San Joaquin Raptor/Wildlife Rescue Center v. County of Stanislaus* (1994) 27 Cal. App.4th 713, 714.) Courts have determined that an EIR must include analysis of the environmental effects of a future action if: (1) it is a reasonably foreseeable consequence of the initial project; and (2) the future action will be significant in that it will likely change the scope or nature of the initial project or its environmental effects. This standard involves determining whether the EIR has left out of the environmental analysis a "crucial element" or "integral part" of the project, without which the project cannot go forward. (*National Parks & Conservation Ass'n v. County of Riverside* (1996) 42 Cal.App.4th 1505, 1519.) Where an action is not a crucial element of the project, but merely contributes to the same pool of cumulative impacts, the action may be included in the EIR's analysis of cumulative impacts instead.

	Using this definition of piecemealing, the Throughput Increase Project is not dependent upon the Rail Spur Project since there is adequate crude supply for the SMR even without the rail project. The project has "independent utility" under CEQA since the ability of the SMR to operate at the maximum approved throughput level is based on the existing infrastructure and current available crude supply, it is not dependent on the Rail Spur Project. With regard to the Rodeo Propane Recovery Project, as discussed in Response CBE-84, this project was designed based upon the current refinery levels of propane and butane in the refinery fuel gas so the project has "independent utility" under CEQA. Therefore, the projects have not been piecemealed since each project has independent utility and are not dependent upon each other. Put another way, the Rodeo Refinery Propane Recovery Project and the Throughput Increase Project would not be a reasonably foreseeable consequence of the Rail Spur Project, and would not likely change the scope or nature of the Rail Spur Project or its environmental effects.
CBE-94	As discussed in Response CBE-93, the Rodeo Refinery Propane Recovery Project, the Throughput Increase Project, and the Rail Spur Project are not dependent upon each other and therefore, the projects have not been piecemealed. The Rodeo Refinery Propane Recovery Project and Throughput Increase Project would not be a reasonably foreseeable consequence of the Rail Spur Project, and would not likely change to scope or nature of the Rail Spur Project or its environmental effects. The RDEIR evaluated the impacts of a change in crude slate at the SMR. The impact assessment was based upon the worst case assumption that the crude being processed by the SMR would be all tar sands. Table 2.6 of the RDEIR provides a list of the key properties of the current crude oil slate and tar sands oil that could be handled by the SMR, and used the properties of the tar sand soil in evaluating the impacts of the crude oil change. This is clearly shown in impact AQ.4 (Section 4.3 Air Quality), where the BTEX emissions where assumed to increase from 0.81 to 1.25% as shown in Table 4.3.13. The 1.25% BTEX level is the highest number associated with processing all Access Western Blend. As discussed in AQ.4 the level of resid processing at the SMR with all tar sand oil would not increase as shown in the figure in Response CBE-111. Therefore, coke production would not increase over what is currently produced based upon the current typical crude blend so there would be no increase in emissions associated with transportation of coke. The RDEIR also evaluated the impacts of the potential increase in sulfur content in the crude to 5%, which is the highest level provided in Table 2.6 for Peace River Heavy. The refinery impacts associated with sulfur changes in the crude were based upon a 0.8% increase in sulfur content of the crude, which is the difference between the typical current crude blend of 4.2% and the 5% for

	Peace River Heavy. In fact the Access Western Blend crude, which is another possible tar sand source of crude discussed in the RDEIR, would have a lower sulfur level than the current typical crude blend. Section 4.3.4.2 of the RDEIR states that a by-product of the refinery operations is elemental sulfur. The elemental sulfur that is produced by the refinery is trucked offsite. The potential crude delivered by rail could have slightly higher sulfur content than the typical crude blend that is currently being run by the refinery. However, the sulfur would be in the range of the major crude sources used at the refinery. This slight increase in sulfur content would not be expected to increase emissions from the sulfur plant, which has strict emission limits within the SLOCAPCD permit. It is possible that with the rail project crude there would be a slight increase in sulfur truck trips. The truck trips for sulfur were 1,624 in 2013. The refinery is limited to a maximum of 14 truck trips per day for sulfur. They are currently averaging about 6 truck trips per day assuming five days per week for trucking sulfur. Assuming an increase of 0.8% sulfur in the crude by weight the number of additional truck trips for sulfur would be about 309 per year (about one additional truck trip per day). This potential increase in sulfur truck trips would be within the truck trips currently allowed for the refinery (14 truck trips per day). These additional truck trips are also addressed in Section 4.12, Transportation and Circulation. Impact HM.3 (Section 4.7, Hazards and Hazardous Materials) discusses the hazard impacts of a change in crude slate to tar sands. As discussed in Impact HM.3, the data in Table 4.7.14 shows that the expected range of sulfur and TAN would be within the range of the crudes that are currently being processed at the SMR. Therefore, the change in crude slate would not be expected to change the sulfur or TAN levels compared to the crude sources that are currently being processed at the SMR. It is possible that the TAN could increase when compared to the typical crude blend. However, with the programs and management systems, discussed above, in place, this potential increase would not be expected to increase the hazards or likelihood of a release at the SMR. These statements are based upon the highest levels of sulfur and TAN for the two tar sands crude oils addressed in the RDEIR. The proposed project at the SMR does not involve any changes to the processing equipment at the refinery. The SMR is designed to handle heavy sour crude and has design limits on the types of crude that can be processed. The proposed project would not change any of these design limits. As shown in Table 2.6 the proposed tar sands oil that would be delivered by rail have very similar properties to the current crude oils that are being handled at the SMR.
CBE-95	The cumulative analysis in the EIR does address the Increased Throughput Project at the SMR. (See Table 3.1, Chapter 3.0, Cumulative Project Description). Operations at the Rodeo Refinery are not anticipated to change

	with the processing of Rail Spur Project crude oil. The refinery currently handles heavy crude oil and the characteristics of the Rail Spur Project crude oil is similar to current heavy crude oils as discussed in Section 2.6 (see Chapter 2.0, Project Description). The SMR ships semi-refined products (gas oils and naphtha) to the Rodeo Refinery via pipeline. The quantity and quality of these semi-refined products is not expected to change with the proposed project (See Responses CBE-84, CBE-85, and CBE-86). The cumulative analysis in the EIR found that the cumulative hazard, air quality and GHG emissions would be significant and unavoidable. For all of these impacts this would be the case for just the proposed SMR Rail Spur Project since the impacts of the project alone would be significant and the significance criteria used for both cumulative and project impact are the same. "[t]he relevant issue to be addressed in an EIR is not the relative amount of impact resulting from a proposed project when compared to existing environmental problems caused by past projects, but rather (whether the additional impact associated with the project) should be considered significant in light of the serious nature of existing problems." (City of Long Beach v. Los Angeles Unified School Dist., supra, 176 Cal.App.4th at pp. 905–906, 98 Cal.Rptr.3d 137). The EIR addressed whether the project's additional impact should be considered cumulatively significant in light of the existing problems, and in many cases concluded that it was.
CBE-96	There are a number of different projects planned for northern Santa Barbara County to produce oil and gas and transport that oil, via either pipeline or truck (via the SMPS) to the SMR. These include project such as Santa Maria Energy, which would move 3,000 barrels per day via pipeline to the SMR, Pacific Coast Energy, which would move 3,600 barrels per day to the SMR via pipeline, ERG Cat Canyon, which would move 5,000 barrels per day via pipeline to the SMR, the PetroRock development, which could move 1,600 barrels per day, and the Aera Energy Cat Canyon Project that could add 10,000 barrels per day. While some of these projects state that the oil will move to the SMR, some do not. For example the Aera Energy Project will truck oil to various customers. These projects have been added to the cumulative project list (see Chapter 3.0, Cumulative Project Descriptions) and evaluated in the applicable issue areas under the cumulative impact discussion. The ERG Foxen Petroleum Pipeline is part of the expansion of the ERG Cat Canyon Field. The pipeline has been designed to move up to 25,000 bbls per day of oil to a tie-in with the Phillips 66 Sisquoc Pipeline. The pipeline has been sized to accommodate other production in the area and well be a common carrier pipeline. This pipeline project has been included in the cumulative list as part of the ERG Cat Canyon Development Project.
CBE-97	The Kinder Morgan terminal in Richmond CA is permitted to unload 70,000 barrels of crude oil per day. Until November 2014 the terminal was receiving two 100-car unit trains of Bakken oil per month. The terminal has stopped

	receiving crude due to market conditions, but still has a permit from the BAAQMD. The Kinder Morgan terminal was permitted to unload crude from rail cars and transfer to trucks for delivery to Bay Area Refineries. The Kinder Morgan crude oil trains servicing the Richmond Terminal have been added to the cumulative crude by rail project list in the FEIR. The SMR Rail Spur Project does not propose to use the Kinder Morgan Terminal as part of the Proposed Project (see Chapter 2.0, Project Description). The Kinder Morgan Terminal is discussed as a possible source of crude via rail and truck as part of the No Project Alternative (See Chapter 5.0, Alternatives Analysis).
CBE-98	This comment is a concluding statement that the comment letter represents the author's options. No further response is required.