Typical Patio Framing Detail

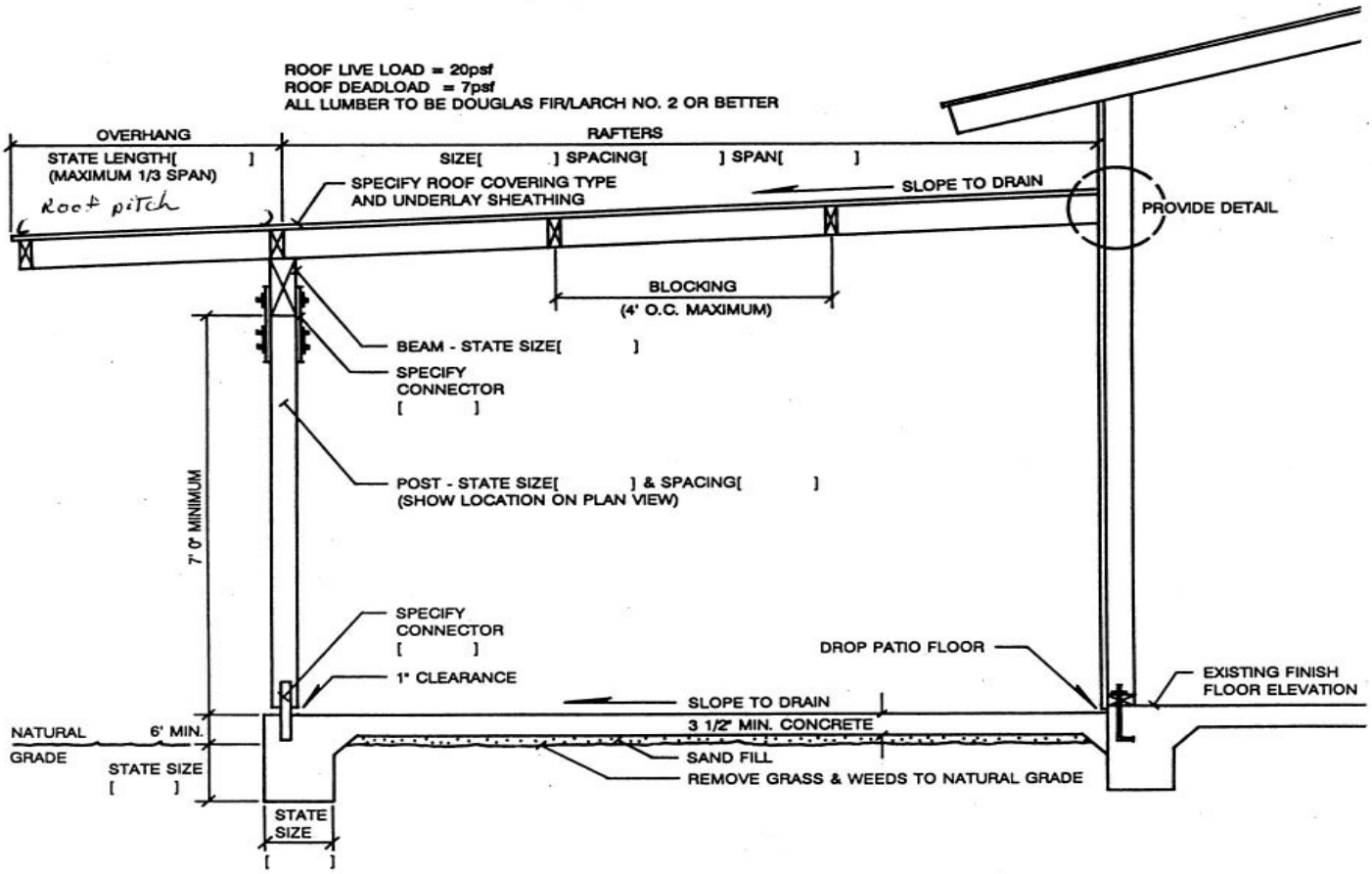

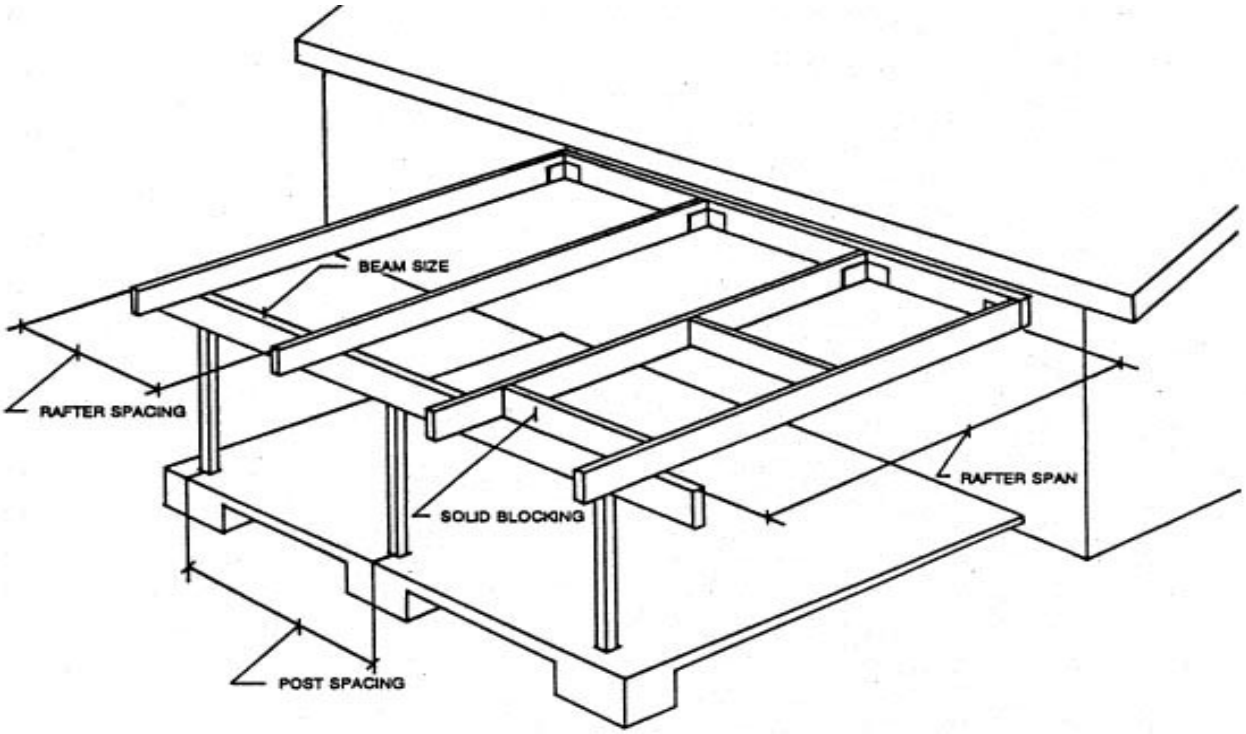

Mobilehome patio covers shall be freestanding

MINIMUM BEAM SIZES						
POST SPACING (FEET)	RAFTER SPAN (FEET)					
	6	8	10	12	1	1
4	4 X 4	4 X 4	4 X 4	4 X 4	4	4
6	4 X 4	4 X 4	4 X 4	4 X 6	4	4
8	4 X 6	4 X 6	4 X 6	4 X 6	4	4
10	4 X 8	4 X 8	4 X 8	4 X 8	4	4

MINIMUM RAFTER SIZES		
RAFTER SPAN (FEET)	RAFTER SPACING	
	16" O.C.	24" O.C.
6	2 X 6	2 X 6
7	2 X 6	2 X 6
8	2 X 6	2 X 6
9	2 X 6	2 X 6
10	2 X 6	2 X 6
11	2 X 6	2 X 8
12	2 X 6	2 X 8
13	2 X 8	2 X 8
14	2 X 8	2 X 8
15	2 X 8	2 X 8
16	2 X 8	2 X 8