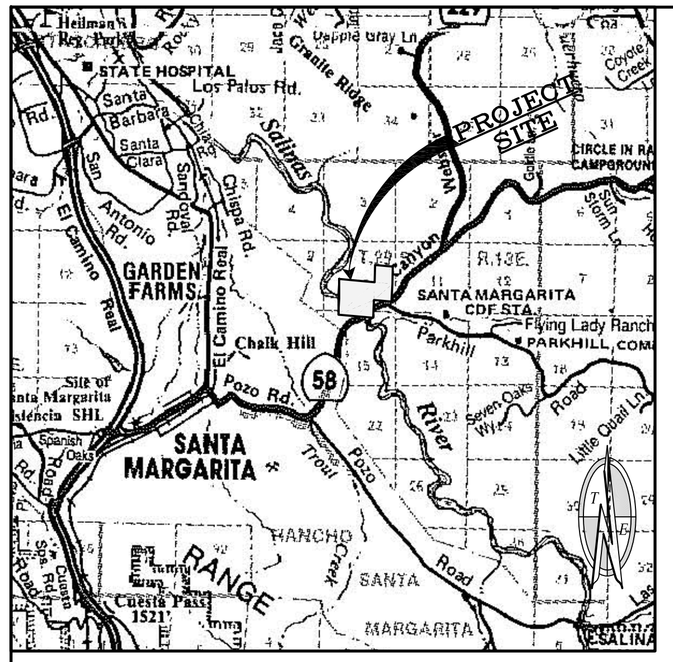

VICINITY MAP

N.T.S.

LEGEND

- EXIST. TREE
- EXIST. CONTOUR ELEVATION (1150)
- EXIST. SWALE/FLOWLINE
- PROPERTY BOUNDARY LINE
- FINISHED GRADE ELEVATION (930.62 FG)
- DIRECTION OF FLOW
- AERIAL TARGET

EXISTING AND PROPOSED STRUCTURES

1. EXIST. BARN.
2. EXIST. STORAGE SHED.
3. EXIST. SHOP/GARAGE.
4. EXIST. RESIDENCE.
5. EXIST. TRAILER.
6. EXIST. WELL.
7. PRIMARY WATER STORAGE TANK.
8. 10,000 GALLON SECONDARY WATER STORAGE TANK.
9. 4" PVC WATER SUPPLY LINE.
10. TRUCK SCALE.
11. SCALE HOUSE.
12. REINFORCED CONCRETE CRIB WALL.
13. 750 GALLON SEPTIC TANK.
14. LEACH FIELD.
15. ENTRANCE ROAD DETENTION BASIN
16. DETENTION BASIN 1B
17. DETENTION BASIN 3B
18. EXISTING WATER STORAGE TANK.

SHEET INDEX

SHEET NO.	TITLE
1.	COVER SHEET
2.	ENTRANCE ROAD "A" PLAN - STA. 7+73 TO 14+50
3.	ENTRANCE ROADS "A" & "B" PLAN - STA. 14+50 TO 19+82
4.	LAS PILITAS ROCK QUARRY - PHASE 1A
5.	LAS PILITAS ROCK QUARRY - PHASE 1B
6.	LAS PILITAS ROCK QUARRY - PHASE 2A
7.	LAS PILITAS ROCK QUARRY - PHASE 2B
8.	LAS PILITAS ROCK QUARRY - PHASE 3A
9.	LAS PILITAS ROCK QUARRY - PHASE 3B
10.	LAS PILITAS ROCK QUARRY - FINAL PHASE
11.	MISCELLANEOUS DETAILS

SHEET INDEX

SHEET NO.	TITLE
12.	DETENTION BASINS (ENTRANCE ROAD, 1A, AND 1B)
13.	DETENTION BASINS (1B, 2B, 3A, & 3B)
14.	NOTES
15.	TREE PLAN
16.	REVEGETATION PLAN (PHASES 1A, 1B, 2A, 2B, 3A, & 3B)
17.	HIGHWAY 101 LINE OF SIGHT PLAN
18.	HIGHWAY 58 LINE OF SIGHT PLAN
19.	WATER POLLUTION CONTROL DRAWING
20	WATER POLLUTION CONTROL DRAWING

BOUNDARY & SITE MAP

PROPERTY DESCRIPTION

BEING A PORTION OF THE SOUTHEAST QUARTER OF SECTION 10, TOWNSHIP 29 SOUTH, RANGE 13 EAST, MOUNT DIABLO MERIDIAN, IN THE COUNTY OF SAN LUIS OBISPO, STATE OF CALIFORNIA.

BENCHMARK: *ELEVATION=1099.44' (NAVD 88)*

DESCRIBED BY NATIONAL GEODETIC SURVEY 1968 AS FOLLOWS:
1 MILE EAST ALONG STATE HIGHWAY 58 FROM THE POST OFFICE AT SANTA MARGARITA, 0.25 MILES WEST OF THE ENTRANCE TO SANTA MARGARITA CEMETERY, AT THE SUMMIT OF A HILL, 25 ½ FEET SOUTH OF THE CENTERLINE OF THE HIGHWAY, 18 ½ FEET WEST OF THE WEST END OF AN ABANDONED GATE, 2 ½ FEET WEST OF TELEPHONE POLE 021, 4.4 FEET NORTH OF A FENCE, 1.6 FEET EAST OF A WITNESS POST, ABOUT 4 FEET HIGHER THAN THE HIGHWAY, AND SET IN THE TOP OF A CONCRETE POST PROJECTING 0.4 FOOT ABOVE THE GROUND.

PROJECT DATA

1. TOTAL LOT AREA: 239 ACRES.
2. PERIMETER BEARINGS AND DISTANCES SHOWN ARE PER R.S. 80 PG 55.
3. ASSESSORS PARCEL NUMBERS: 070-141-070 & 071
4. ADDRESS: 6660 HIGHWAY 58, SANTA MARGARITA, CA. 93453
5. SQUARE FOOTAGE OF SITE DISTURBANCE: 1,692,635 (38.9 AC.)

TARTAGLIA ENGINEERING
P.O. BOX 1930, ATASCADERO, CA. 93423 – 805-466-5660

PUBLIC IMPROVEMENT PLANS FOR
LAS PILITAS ROCK QUARRY

COVER SHEET

DESIGN/DRAWN	COUNTY PLAN CHECK	APPROVED FOR COUNTY REQUIREMENTS
TGE		DEVELOPMENT SERVICES ENGINEER — DATE
JOB NO. 08-23	COUNTY W.O. NO. xxx	R.C.E. 24084 — DATE
CALIFORNIA COORDINATES N 706 E 1239		SHEET # 1 OF # 20

LAS PILITAS ROCK QUARRY

HIGHWAY 58– APN 070–141–070 & 071

REV.	DESCRIPTION	DATE	APP.

TARTAGLIA ENGINEERING CIVIL ENGINEERS
P.O. Box 1930, Atascadero, CA 93423
(805) 466-5660

LAS PILITAS RESOURCES LLC

DESIGN	TGE
DRAWN	TGE
CHECKED	RCT
SCALE	AS SHOWN
DWG.NO.	08-23
DATE	9-17-09
SHEET	1 OF 20

\\Server1\Cad Projects 3\08-23\engineer.dir\ 1.dwg, 9/21/2009 10:24:53 AM

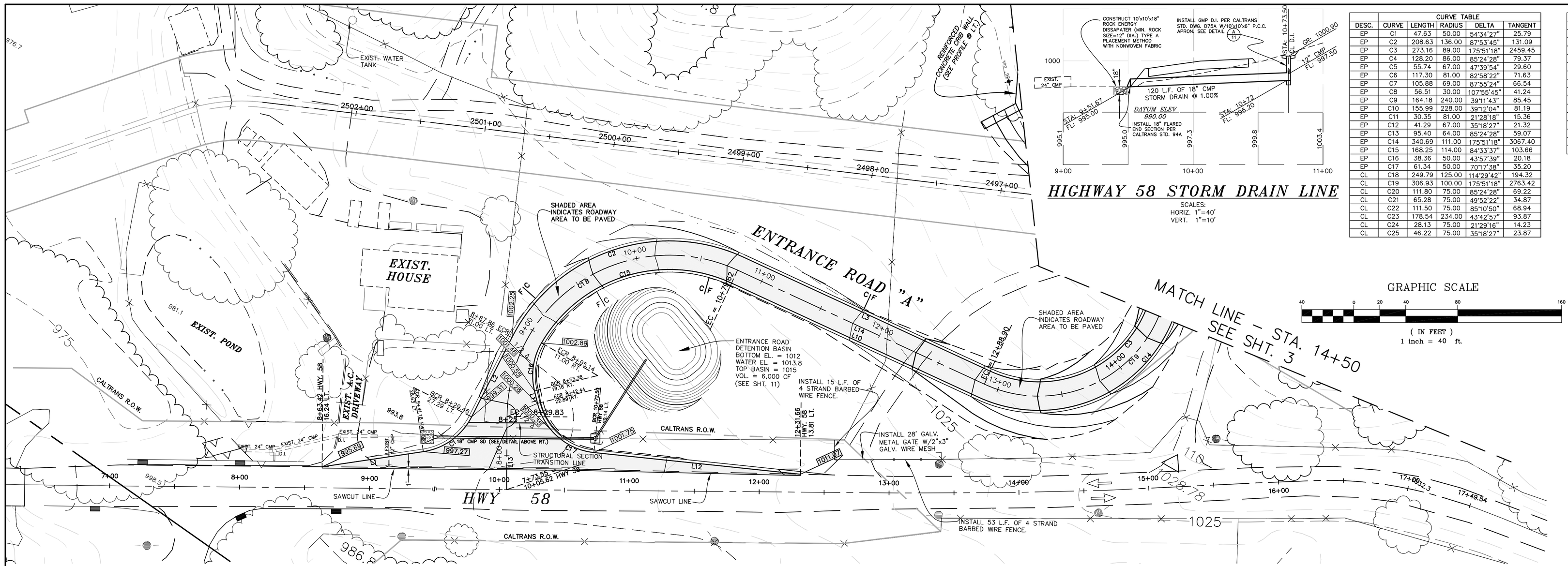

HIGHWAY 58 STORM DRAIN LINE

SCALES:
HORIZ. 1"=40'
VERT. 1"=10'

CURVE TABLE					
DESC.	CURVE	LENGTH	RADIUS	DELTA	TANGENT
EP	C1	47.63	50.00	54°34'27"	25.79
EP	C2	208.63	136.00	87°53'45"	131.09
EP	C3	273.16	89.00	175°51'18"	2459.45
EP	C4	128.20	86.00	85°24'28"	79.37
EP	C5	55.74	67.00	47°39'54"	29.60
EP	C6	117.30	81.00	82°58'22"	71.63
EP	C7	105.88	69.00	87°55'24"	66.54
EP	C8	56.51	30.00	107°55'45"	41.24
EP	C9	164.18	240.00	39°11'43"	85.45
EP	C10	155.99	228.00	39°12'04"	81.19
EP	C11	30.35	81.00	21°28'18"	15.36
EP	C12	41.29	67.00	35°18'27"	21.32
EP	C13	95.40	64.00	85°24'28"	59.07
EP	C14	340.69	111.00	175°51'18"	3067.40
EP	C15	168.25	114.00	84°33'37"	103.66
EP	C16	38.36	50.00	43°57'39"	20.18
EP	C17	61.34	50.00	70°17'38"	35.20
CL	C18	249.79	125.00	114°29'42"	194.32
CL	C19	306.93	100.00	175°51'18"	2763.42
CL	C20	111.80	75.00	85°24'28"	69.22
CL	C21	65.28	75.00	49°52'22"	34.87
CL	C22	111.50	75.00	85°10'50"	68.94
CL	C23	178.54	234.00	43°42'57"	93.87
CL	C24	28.13	75.00	21°29'16"	14.23
CL	C25	46.22	75.00	35°18'27"	23.87

LINE TABLE			
DESC.	LINE	LENGTH	BEARING
EP	L1	78.74	N51°29'20"E
EP	L2	68.52	N03°05'07"W
EP	L3	209.28	N84°48'38"E
EP	L4	45.16	N05°38'13"W
EP	L5	57.72	N29°40'15"E
EP	L6	57.72	S29°40'15"W
EP	L7	11.87	S13°49'09"W
EP	L8	10.39	S29°40'15"W
EP	L9	47.23	S05°38'13"E
EP	L10	209.28	S84°48'38"W
EP	L11	9.83	S43°42'38"E
EP	L12	159.90	N65°59'44"E
CL	L13	56.28	N29°41'05"W
CL	L14	209.28	N84°48'38"E
CL	L15	39.87	N05°38'13"W

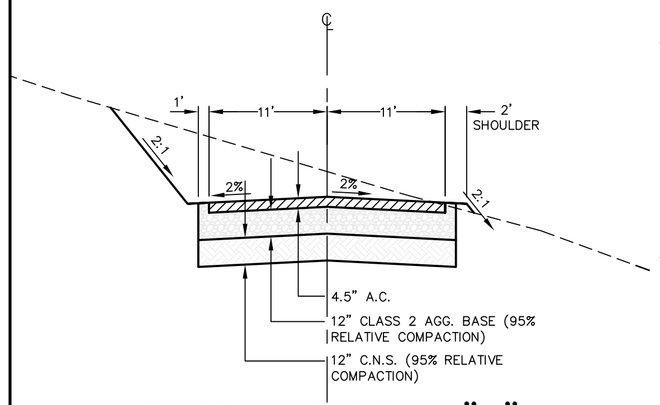

ENTRANCE ROAD "A" TYPICAL SECTION
STA. 8+95.14 TO 17+47.50

SCALES: HORIZ. 1"=10' VERT. 1"=4'

STRUCTURAL SECTION SHOWN IS A MINIMUM AND SHALL BE DETERMINED AT TIME OF CONSTRUCTION BASED ON THE R-VALUE OF NATIVE MATERIAL AND A MINIMUM TRAFFIC INDEX OF 8.0.

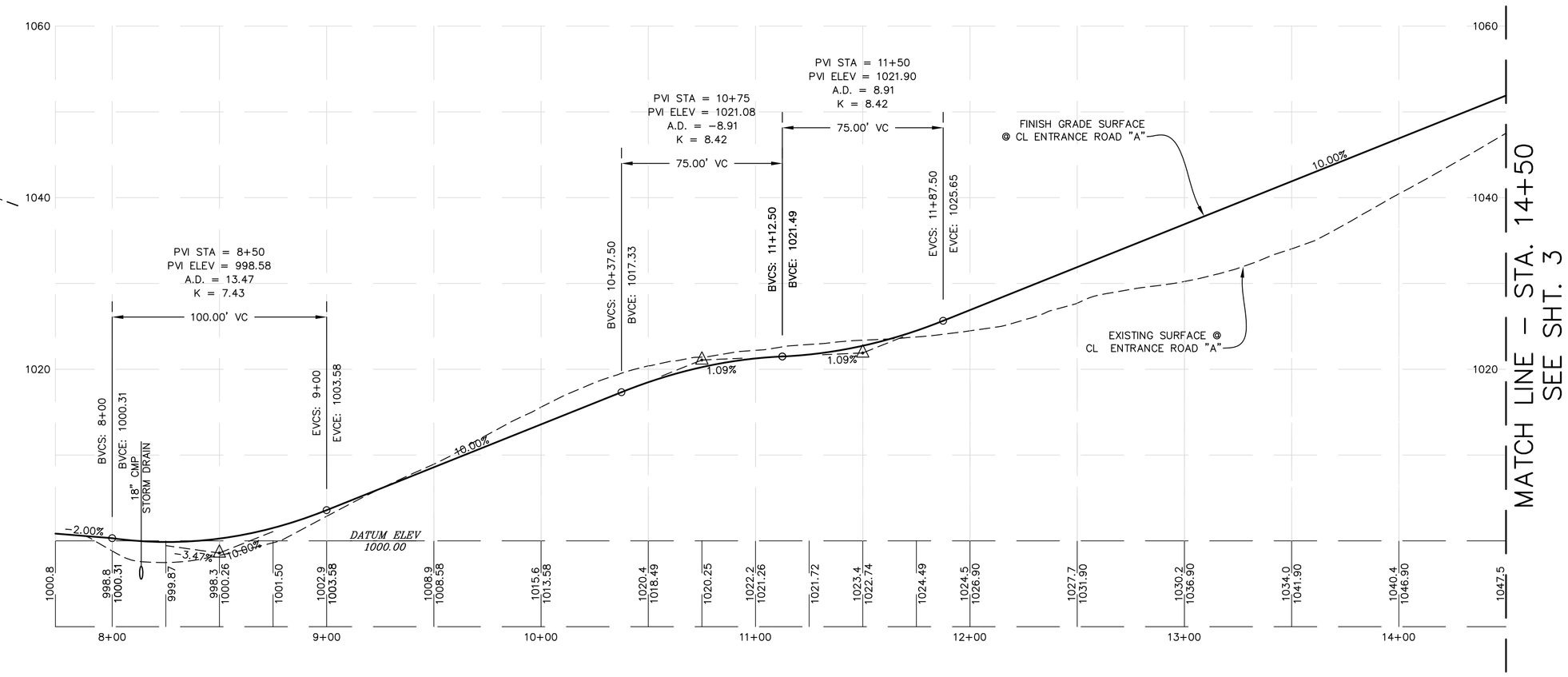

CENTERLINE ENTRANCE ROAD "A" PROFILE

SCALE:
HORIZ. 1" = 40'
VERT. 1" = 10'

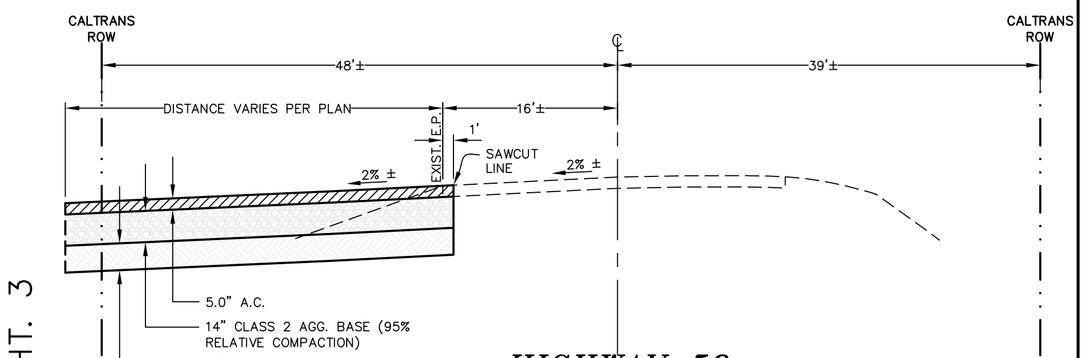

HIGHWAY 58 TYPICAL SECTION
STA. 8+63.42 TO 12+31.66

SCALES: HORIZ. 1"=10' VERT. 1"=4'

STRUCTURAL SECTION SHOWN IS A MINIMUM AND SHALL BE DETERMINED AT TIME OF CONSTRUCTION BASED ON THE R-VALUE OF NATIVE MATERIAL AND A MINIMUM TRAFFIC INDEX OF 9.0.

TARTAGLIA ENGINEERING
P.O. BOX 1930, ATASCADERO, CA. 93423 - 805-466-5660

PUBLIC IMPROVEMENT PLANS FOR
LAS PILITAS ROCK QUARRY

ENTRANCE ROAD PLAN

DESIGN/DRAWN	COUNTY PLAN CHECK	APPROVED FOR COUNTY REQUIREMENTS
TGE		DEVELOPMENT SERVICES ENGINEER — DATE
JOB NO. 08-23	COUNTY W.O. NO. xxx	R.C.E. 24084 — DATE
CALIFORNIA COORDINATES N 706 E 1239		SHEET # 2 OF # 20

LAS PILITAS ROCK QUARRY - ENTRANCE ROAD PLAN
HIGHWAY 58- APN 070-141-070 & 071

REV.	DESCRIECION	DATE	APP.

TARTAGLIA ENGINEERING
CIVIL ENGINEERS
P.O. Box 1930, Atascadero, CA 93423
(805) 466-5660

LAS PILITAS RESOURCES LLC

DESIGN	TGE
DRAWN	TGE
CHECKED	RCT
SCALE	1"=40'
DWG.NO.	08-23
DATE	9-09-09
SHEET	2 OF 20

I:\Server\c\Land Projects 7\06-23\dwg\entrance.dwc, 2 and 3.dwg, 9/11/2009 10:25:12 AM

\\Server1\c\Land Projects 3\08-23a\dwg\entrance shts. 2 and 3.dwg, 9/11/2009 10:26:36 AM

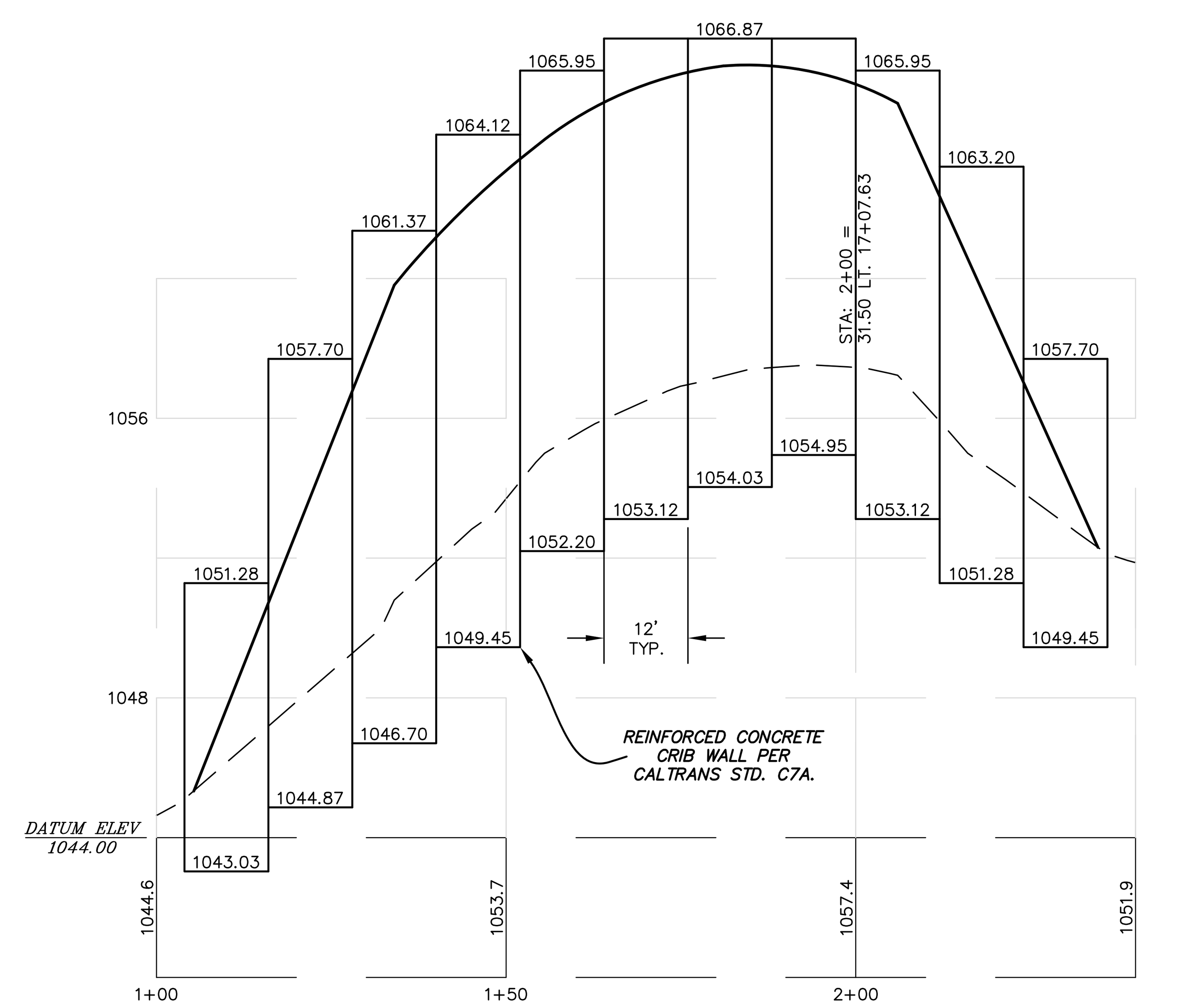

REINFORCED CONCRETE CRIB WALL PROFILE

SCALES:
HORIZ. 1"=20'
VERT. 1"=4'

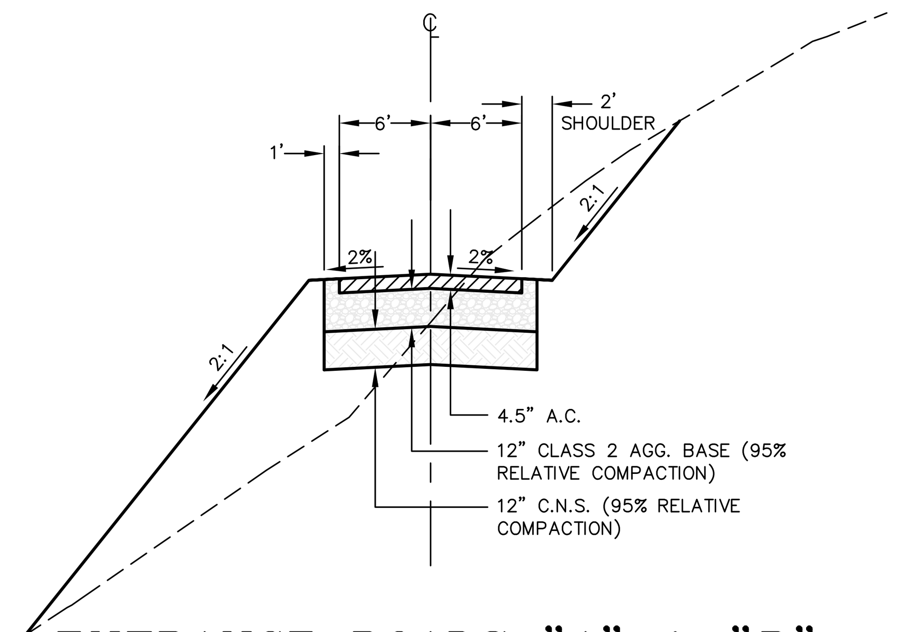

ENTRANCE ROADS "A" & "B" TYPICAL SECTION
STA. 17+47.50 TO 19+82 & STA. 7+47.50 TO 10+00

SCALES: HORIZ. 1"=10' VERT. 1"=4'

STRUCTURAL SECTION SHOWN IS A MINIMUM AND SHALL BE DETERMINED AT TIME OF CONSTRUCTION BASED ON THE R-VALUE OF NATIVE MATERIAL AND A MINIMUM TRAFFIC INDEX OF 8.0.

GRAPHIC SCALE

(IN FEET)
1 inch = 40 ft.

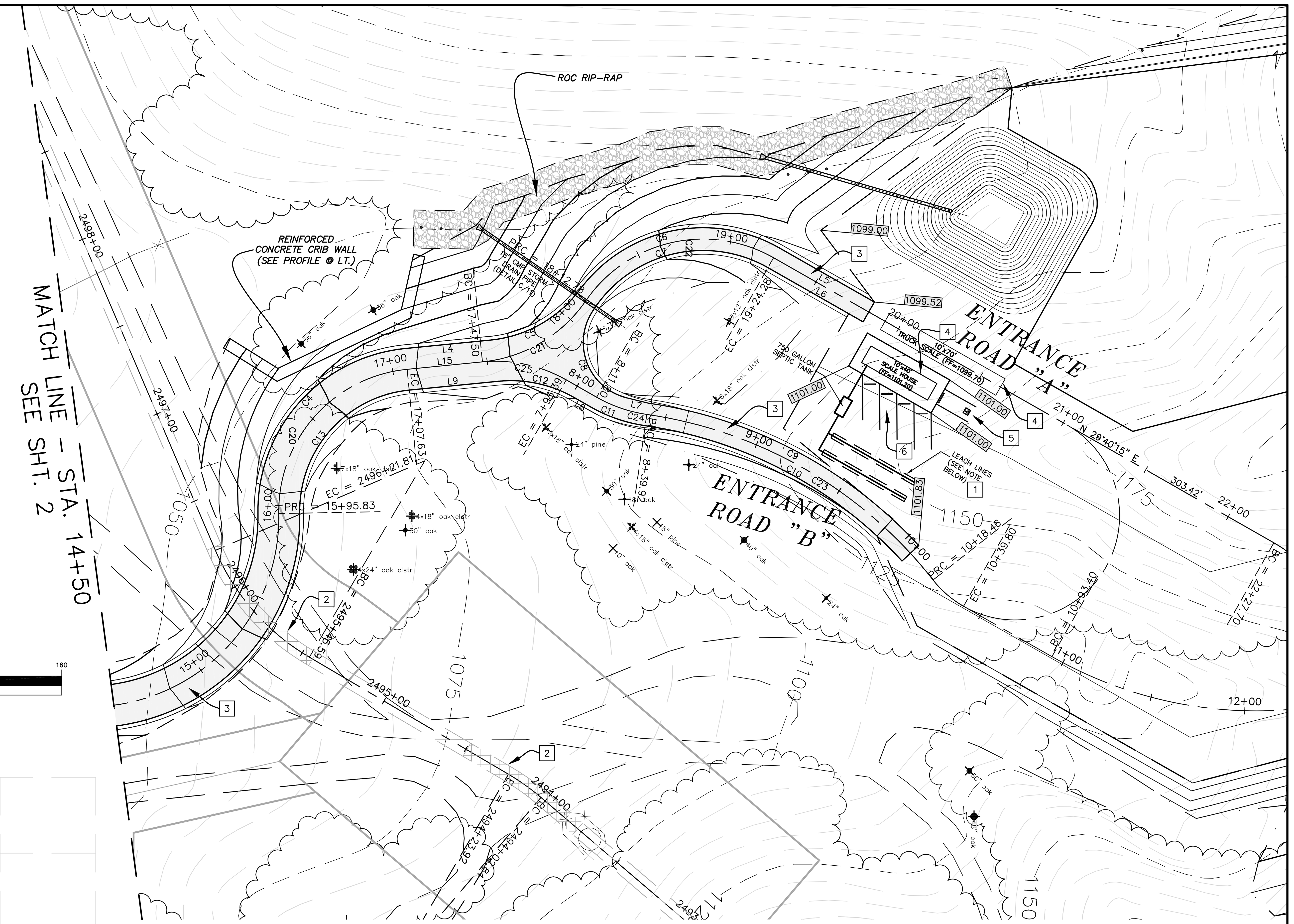

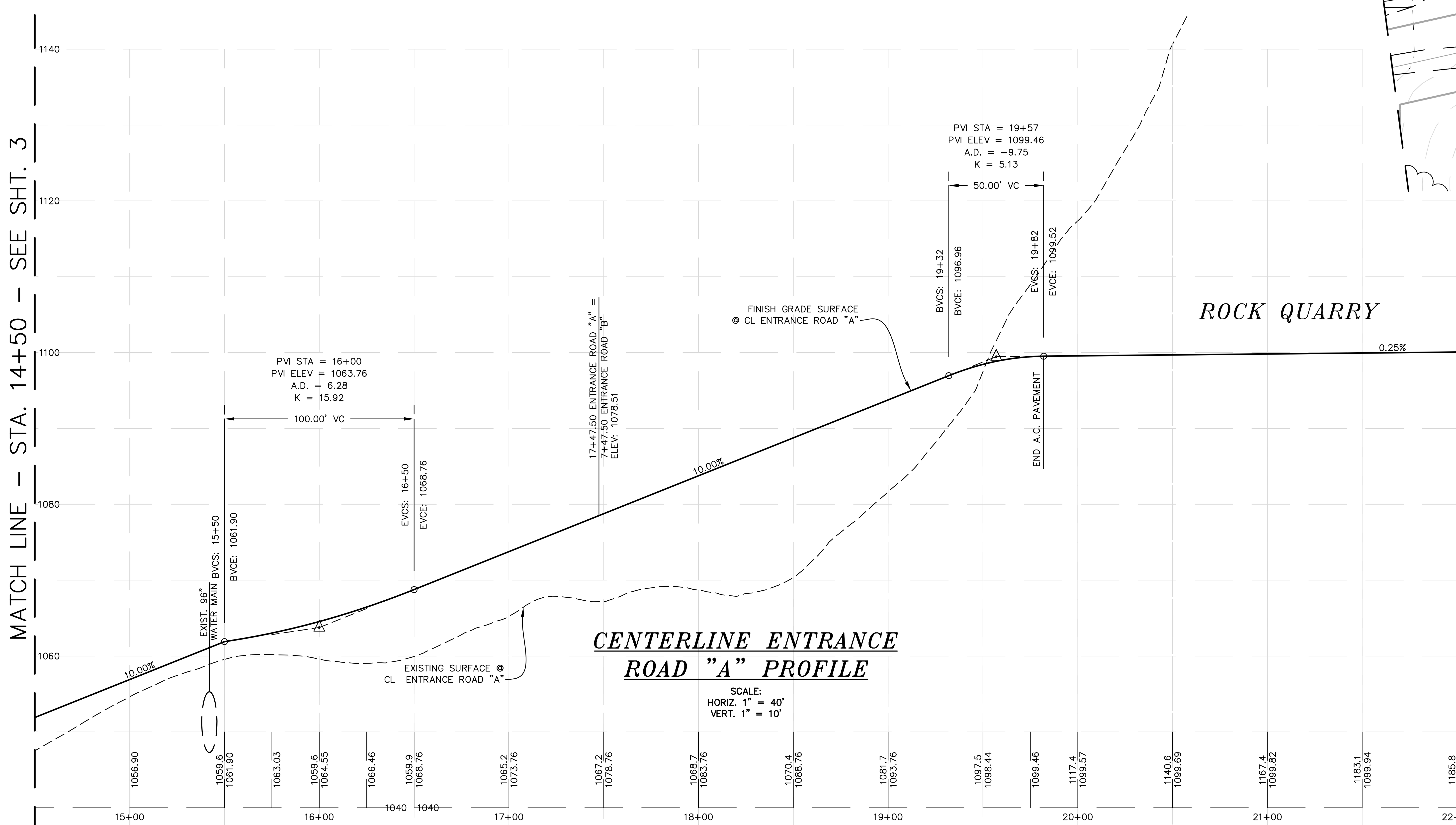

CENTERLINE ENTRANCE ROAD "A" PROFILE

SCALE:
HORIZ. 1" = 40'
VERT. 1" = 10'

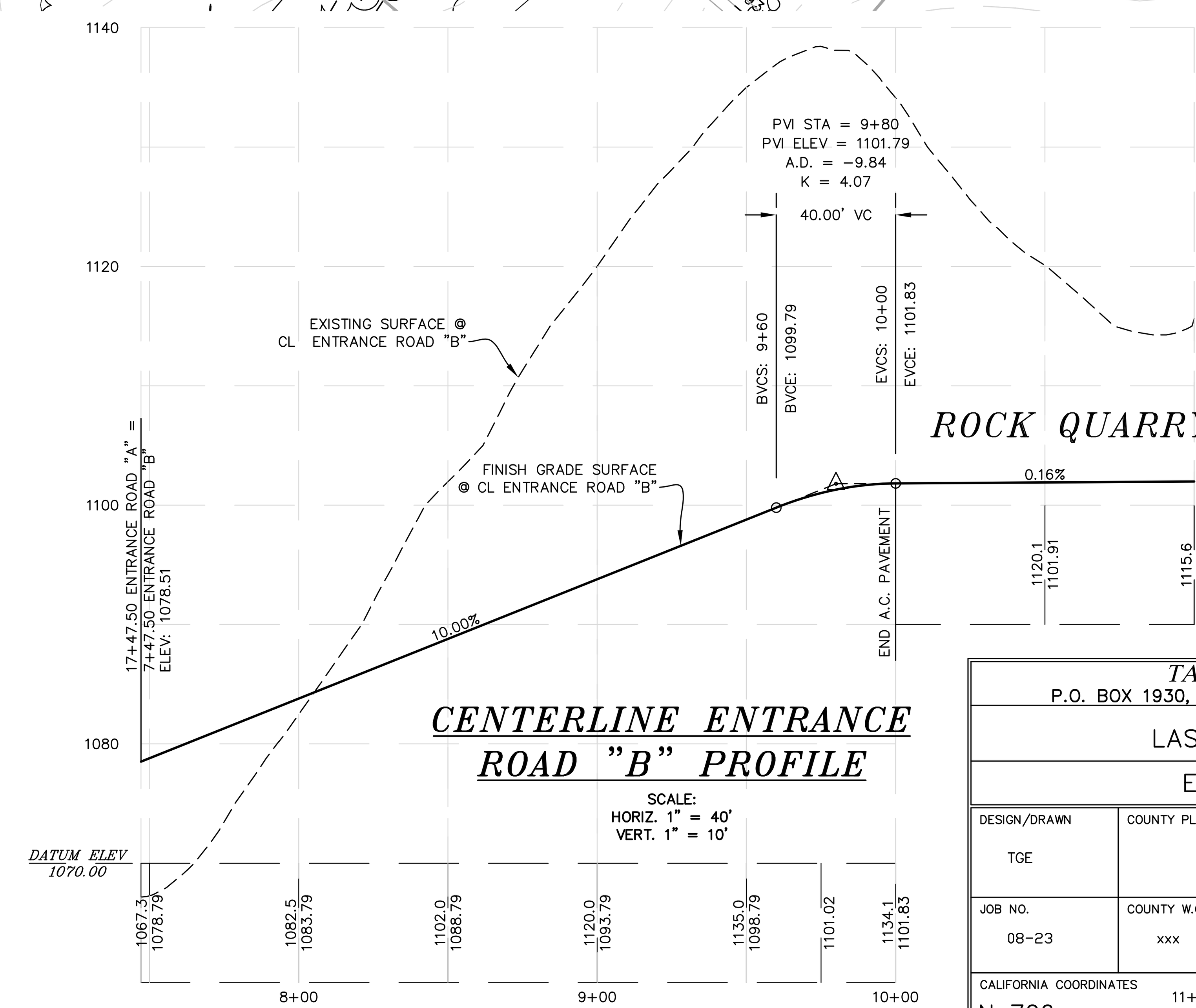

CENTERLINE ENTRANCE ROAD "B" PROFILE

SCALE:
HORIZ. 1" = 40'
VERT. 1" = 10'

NOTES:

1. FINAL LEACH FIELD DIMENSIONS TO BE DETERMINED AFTER PERCOLATION TESTS HAVE BEEN COMPLETED FOR THIS SITE.
2. HATCHED AREA OVER WATERLINE INDICATES CONCRETE ENCASEMENT FOR TRAFFIC CROSSING.
3. SHADED AREA INDICATES ROADWAY AREA TO BE PAVED.
4. TRUCK SCALE AND SCALE HOUSE PLANS SHALL BE INCLUDED IN A SEPARATE SUBMITTAL.
5. HANDICAP PARKING WITH PARKING BUMPER.
6. 4 PARKING SPACES WITH PARKING BUMPERS

TARTAGLIA ENGINEERING
P.O. BOX 1930, ATASCADERO, CA. 93423 - 805-466-5660
PUBLIC IMPROVEMENT PLANS FOR
LAS PILITAS ROCK QUARRY

ENTRANCE ROAD PLAN

DESIGN/DRAWN	COUNTY PLAN CHECK	APPROVED FOR COUNTY REQUIREMENTS
TGE		DEVELOPMENT SERVICES ENGINEER — DATE
JOB NO. 08-23	COUNTY W.O. NO. xxx	R.C.E. 24084 — DATE
CALIFORNIA COORDINATES N 706	11+00 E 1239	SHEET # 3 OF # 20

REV.	DESCRIECION	DATE	APP.

LAS PILITAS ROCK QUARRY - ENTRANCE ROAD PLAN
HIGHWAY 58- APN 070-141-070 & 071

TARTAGLIA ENGINEERING
CIVIL ENGINEERS
P.O. Box 1930, Atascadero, CA 93423
(805) 466-5660

LAS PILITAS RESOURCES LLC

DESIGN	TGE
DRAWN	TGE
CHECKED	RCT
SCALE	1"=40'
DWG.NO.	08-23
DATE	9-09-09
SHEET	3 OF 20