SAN LUIS OBISPO COUNTY

DEPARTMENT OF PLANNING AND BUILDING

THIS IS A NEW PROJECT REFERRAL

DATE: 3/4/2015

TO: _____

FROM: Schani Siong (805-781-4374 or ssiong@co.slo.ca.us)
Coastal Team / Development Review

PROJECT DESCRIPTION: DRC2014-00095 CALTRANS – Proposed conditional use permit/development plan to widen Highway 1 at Sheridan Rd to construct a two-way left turn channel and remove fixed objects within 20 feet of roadway. Site location is Highway 1 at Sheridan Rd. APN: 000-000-000

Return this letter with your comments attached no later than: 14 days from receipt of this referral. CACs please respond within 60 days. Thank you.

PART 1 - IS THE ATTACHED INFORMATION ADEQUATE TO COMPLETE YOUR REVIEW?

- ❑ YES (Please go on to PART II.)
- ❑ NO (Call me ASAP to discuss what else you need. We have only 10 days in which we must obtain comments from outside agencies.)

PART II - ARE THERE SIGNIFICANT CONCERNS, PROBLEMS OR IMPACTS IN YOUR AREA OF REVIEW?

- ❑ YES (Please describe impacts, along with recommended mitigation measures to reduce the impacts to less-than-significant levels, and attach to this letter)
- ❑ NO (Please go on to PART III)

PART III - INDICATE YOUR RECOMMENDATION FOR FINAL ACTION.

Please attach any conditions of approval you recommend to be incorporated into the project's approval, or state reasons for recommending denial.

IF YOU HAVE "NO COMMENT," PLEASE SO INDICATE, OR CALL.

_____

_____

_____

Date	Name	Phone

GENERAL APPLICATION FORM

San Luis Obispo County Department of Planning and Buildi

DRC2014-00095 PROVOST TRUST

CONDITIONAL USE PERMIT/

WIDEN HIGHWAY TO CONSTRUCT 2-WAY LEFT-TURN CHANNEL; REMOVE FIXED

/

APPLICATION TYPE - CHECK ALL THAT APPLY

- ☐ Emergency Permit
- ☐ Tree Permit
- ☐ F
- ☐ Site Plan
- ☐ Minor Use Permit
- ☐ Variance
- ☐ Other
- ☒ Conditional Use Permit/Development Plan
- ☐ Surface Mining/Reclamation Plan
- ☐ Curb, Gutter & Sidewalk Waiver
- ☐ Modification to approved land use permit

APPLICANT INFORMATION Check box for contact person assigned to this project

☐ Landowner Name Ca. Dept. of Transportation c/o Amy Donatello Daytime Phone 549-3014
Mailing Address 50 Higuera, SLO Zip Code 93401
Email Address: Amy.Donatello@dot.ca.gov

☐ Applicant Name _____ Daytime Phone _____
Mailing Address _____ Zip Code _____
Email Address: _____

☒ Agent Name Paula Huddleston Daytime Phone 549-3063
Mailing Address 50 Higuera, SLO Zip Code 93401
Email Address: Paula.Huddleston@dot.ca.gov

PROPERTY INFORMATION

Total Size of Site: 6.1 acres Assessor Parcel Number(s): 091-174-~~040~~ (adjacent)
Legal Description: State right-of-way
Address of the project (if known): near 2185 Idyllwild Pl, AG
Directions to the site (including gate codes) - describe first with name of road providing primary access to the site, then nearest roads, landmarks, etc.: Highway 1 at Sheridan Road, near Oceano Dunes Rec. Area and north of Oso Flaco Lake Rd.
Describe current uses, existing structures, and other improvements and vegetation on the property:
State roadway and right-of-way, eucalytus grove, residential acreage.

PROPOSED PROJECT

Describe the proposed project (inc. sq. ft. of all buildings): Widen highway to construct 2-way left-turn channel; remove fixed objects within 20' of roadway. See attached.

LEGAL DECLARATION

I, the owner of record of this property, have completed this form accurately and declare that all statements here are true. I do hereby grant official representatives of the county authorization to inspect the subject property.

Property owner signature [signature] Date 1/15/15

FOR STAFF USE ONLY

Reason for Land Use Permit: _____

Project description for permitting purposes

The project will add left-turn channelization in both directions at the intersection of Highway 1 and Sheridan Road in order to improve operations. There is a concentration of collisions at this intersection related to turning movements.

The main components of the project are:

- Highway 1 will be widened to the north side beginning approximately 1200' feet on either side of Sheridan Road to accommodate the turn channel pockets.
- At Sheridan Road, the widening will consist of adding a standard 12-foot lane and an 8-foot shoulder in addition to the turn channel. The existing northbound 12' lane will become the left-turn lane. The existing right turn pocket into Sheridan Road north will become part of the new northbound through lane. The existing 2' northbound shoulder will be cut away and a new northbound 8' shoulder constructed. The widening will be tapered at each end to conform to the existing roadway.
- Approximately 480 eucalyptus trees, along with any other fixed objects, will be removed from the northbound side of the highway between Sheridan Road and Ralcoa Way to create a 20-foot clear recovery zone for safety purposes. No replanting is proposed.
- One PG&E tension pole on the northbound side of the highway, about 950 feet east of Sheridan Road, will be relocated out of the clear recovery zone. The pole will remain in State right-of-way, but the guy wire will be relocated into the existing utility easement.
- Two existing 12-inch cross culverts located about 400 feet east of Sheridan Road will be extended by 18 feet to accommodate the roadway widening.
- A new 18" cross culvert with rock slope protection (RSP) at the outlet will be constructed just west of Sheridan Road to address flooding at that location. The culvert will capture water that collects in the southbound shoulder, convey it under the highway, and discharge it to the northbound side, mimicking natural drainage tendencies.
- Prior to road construction, Philips 66 will be modifying their existing 8-inch petroleum line that runs under and parallel to Sheridan Road. They either will extend the casing on the existing pipe, or will replace the affected section of pipe entirely.
- Disturbed soil areas will be stabilized using hydroseeding, and construction best management practices (such as silt fence and fiber rolls) will be used to reduce erosion during construction.

LAND USE PERMIT APPLICATION

San Luis Obispo County Department of Planning and Building File No _____

Type of project: ☐ Commercial ☐ Industrial ☐ Residential ☐ Recreational ☒ Other

Describe any modifications/adjustments from ordinance needed and the reason for the request (if applicable): _____

Describe existing and future access to the proposed project site: Access will be via public roads.

Surrounding parcel ownership: Do you own adjacent property? ☐ Yes ☒ No
If yes, what is the acreage of all property you own that surrounds the project site? _____

Surrounding land use: What are the uses of the land surrounding your property (when applicable, please specify all agricultural uses):
North: residential South: industrial
East: state highway West: state highway

For all projects, answer the following:
Square footage and percentage of the total site (approximately) that will be used for the following:
Buildings: Ø sq. feet Ø % Landscaping: Ø sq. feet Ø %
Paving: 125,000 sq. feet 47 % Other (specify) 28,200 ft² tree removal (11%)
Total area of all paving and structures: 6.1 ☐ sq. feet ☒ acres
Total area of grading or removal of ground cover: 1.7 ☐ sq. feet ☒ acres (overlaps w/new pavement)
Number of parking spaces proposed: Ø Height of tallest structure: N/A.
Number of trees to be removed: approx. 480 Type: eucalyptus (16"-55" DBH)
Setbacks: N/A Front _____ Right _____ Left _____ Back _____

Proposed water source: ☐ On-site well ☐ Shared well ☐ Other N/A
☐ Community System - List the agency or company responsible for provision: _____
Do you have a valid will-serve letter? ☐ Yes ☐ No (If yes, please submit copy)

Proposed sewage disposal: ☐ Individual on-site system ☐ Other N/A
☐ Community System - List the agency or company responsible for sewage disposal: _____
Do you have a valid will-serve letter? ☐ Yes ☐ No (If yes, please submit copy)

Fire Agency: List the agency responsible for fire protection: San Luis County Fire, Mesa fire sta.

For commercial/industrial projects answer the following: N/A
Total outdoor use area: _____ ☐ sq. feet ☐ acres
Total floor area of all structures including upper stories: _____ sq. feet

For residential projects, answer the following: N/A
Number of residential units: _____ Number of bedrooms per unit: _____
Total floor area of all structures including upper stories, but not garages and carports: _____
Total of area of the lot(s) minus building footprint and parking spaces: _____

ENVIRONMENTAL DESCRIPTION FORM

San Luis Obispo County Department of Planning and Building File No _____

The California Environmental Quality Act (CEQA) requires all state and local agencies to consider and mitigate environmental impacts for their own actions and when permitting private projects. The Act also requires that an environmental impact report (EIR) be prepared for all actions that may significantly affect the quality of the environment. The information you provide on this form will help the Department of Planning and Building determine whether or not your project will significantly affect the quality of the environment.

To ensure that your environmental review is completed as quickly as possible, please remember to:

a. Answer **ALL** of the questions as accurately and completely as possible.
b. Include any additional information or explanations where you believe it would be helpful or where required. Include additional pages if needed.
c. If you are requesting a land division or a re-zoning, be sure to include complete information about future development that may result from the proposed land division or rezoning.
d. Include references to any reports or studies you are aware of that might be relevant to the questions asked or the answers you provide.

Should a determination be made that the information is inaccurate or insufficient, you will be required to submit additional information upon request.

Physical Site Characteristic Information

Your site plan will also need to show the information requested here:

1. Describe the topography of the site:
   Level to gently rolling, 0-10% slopes: 5.9 acres
   Moderate slopes of 10-30%: 0.2 acres
   Steep slopes over 30%: Ø acres
2. Are there any springs, streams, lakes or marshes on or near the site? ☐ Yes ☒ No
   If yes, please describe: _____
3. Are there any flooding problems on the site or in the surrounding area? ☒ Yes ☐ No
   If yes, please describe: Water pools on southbound shoulder.
4. Has a drainage plan been prepared? ☒ Yes ☐ No
   If yes, please include with application.
5. Has there been any grading or earthwork on the project site? ☒ Yes ☐ No
   If yes, please explain: Most of area is fully developed.
6. Has a grading plan been prepared? ☐ Yes ☒ No
   If yes, please include with application.
7. Are there any sewer ponds/waste disposal sites on/adjacent to the project? ☐ Yes ☒ No
8. Is a railroad or highway within 300 feet of your project site? ☐ Yes ☒ No
9. Can the proposed project be seen from surrounding public roads? ☒ Yes ☐ No
   If yes, please list: Highway 1, Sheridan Road, Ralcoa Way.

Water Supply Information

1. What type of water supply is proposed? N/A
   ☐ Individual well ☐ Shared well ☐ Community water system
2. What is the proposed use of the water? N/A
   ☐ Residential ☐ Agricultural - Explain _____
   ☐ Commercial/Office - Explain _____
   ☐ Industrial – Explain _____
3. What is the expected daily water demand associated with the project? Ø
4. How many service connections will be required? Ø
5. Do operable water facilities exist on the site?
   ☐ Yes ☒ No If yes, please describe: _____
6. Has there been a sustained yield test on proposed or existing wells?
   ☐ Yes ☒ No If yes, please attach.
7. Does water meet the Health Agency's quality requirements? N/A

Bacteriological?	☐ Yes	☐ No
Chemical?	☐ Yes	☐ No
Physical	☐ Yes	☐ No
Water analysis report submitted?	☐ Yes	☐ No

8. Please check if any of the following have been completed on the subject property and/or submitted to County Environmental Health. N/A
   ☐ Well Driller's Letter ☐ Water Quality Analysis ☐ OK or ☐ Problems
   ☐ Will Serve Letter ☐ Pump Test _____ Hours_____G.P.M.
   ☐ Surrounding Well Logs ☐ Hydrologic Study ☐ Other _____

Please attach any letters or documents to verify that water is available for the proposed project.

Sewage Disposal Information N/A

If an on-site (individual) subsurface sewage disposal system will be used:

1. Has an engineered percolation test been accomplished?
   ☐ Yes ☐ No If yes, please attach a copy.
2. What is the distance from proposed leach field to any neighboring water wells? _____ feet
3. Will subsurface drainage result in the possibility of effluent reappearing in surface water or on adjacent lands, due to steep slopes, impervious soil layers or other existing conditions?
   ☐ Yes ☐ No
4. Has a piezometer test been completed?
   ☐ Yes ☐ No
5. Will a Waste Discharge Permit from the Regional Water Quality Control Board be required?
   ☐ Yes ☐ No *(a waste discharge permit is typically needed when you exceed 2,500 gallons per day)*

If a community sewage disposal system is to be used:

1. Is this project to be connected to an existing sewer line? ☐ Yes ☐ No
   Distance to nearest sewer line: _____ Location of connection: _____
2. What is the amount of proposed flow? _____ G.P.D.
3. Does the existing collection treatment and disposal system have adequate additional capacity to accept the proposed flow? ☐ Yes ☐ No

Solid Waste Information N/A

1. What type of solid waste will be generated by the project?
   ☐ Domestic ☐ Industrial ☐ Agricultural ☐ Other, please explain? _____
2. Name of Solid Waste Disposal Company: _____
3. Where is the waste disposal storage in relation to buildings? _____
4. Does your project design include an area for collecting recyclable materials and/or composting materials? ☐ Yes ☐ No

Community Service Information N/A

1. Name of School District: _____
2. Location of nearest police station: _____
3. Location of nearest fire station: _____
4. Location of nearest public transit stop: _____
5. Are services (grocery/other shopping) within walking distance of the project? ☐ Yes ☐ No
   If yes, what is the distance? _____ feet/miles

Historic and Archeological Information

1. Please describe the historic use of the property:
   Eucalyptus grove adjacent to highway was part of a lumber operation.
2. Are you aware of the presence of any historic, cultural or archaeological materials on the project site or in the vicinity? ☐ Yes ☒ No
   If yes, please describe: _____
3. Has an archaeological surface survey been done for the project site? ☒ Yes ☐ No
   If yes, please include two copies of the report with the application.

Commercial/Industrial Project Information N/A

Only complete this section if you are proposing a commercial or industrial project or zoning change.

1. Days of Operation: _____ Hours of Operation: _____
2. How many people will this project employ? _____
3. Will employees work in shifts? ☐ Yes ☐ No
   If yes, please identify the shift times and number of employees for each shift _____
4. Will this project produce any emissions (i.e., gasses, smoke, dust, odors, fumes, vapors)?
   ☐ Yes ☐ No If yes, please explain: _____
5. Will this project increase the noise level in the immediate vicinity? ☐ Yes ☐ No
   If yes, please explain: _____
   (If loud equipment is proposed, please submit manufacturers estimate on noise output.)
6. What type of industrial waste materials will result from the project? Explain in detail: _____
7. Will hazardous products be used or stored on-site? ☐ Yes ☐ No
   If yes, please describe in detail: _____
8. Has a traffic study been prepared? ☐ Yes ☐ No If yes, please attach a copy.

9. Please estimate the number of employees, customers and other project-related traffic trips to or from the project: Between 7:00 - 9:00 a.m. _____ Between 4:00 to 6:00 p.m. _____
10. Are you proposing any special measures (carpooling, public transit, telecommuting) to reduce automobile trips by employees ☐ Yes ☐ No
    If yes, please specify what you are proposing: _____
11. Are you aware of any potentially problematic roadway conditions that may exist or result from the proposed project, such as poor sight distance at access points, connecting with the public road?
    ☐ Yes ☐ No If yes, please describe: _____

Agricultural Information

N/A

Only complete this section if your site is: 1) Within the Agricultural land use category, or 2) currently in agricultural production.

1. Is the site currently in Agricultural Preserve (Williamson Act)? ☐ Yes ☐ No
2. If yes, is the site currently under land conservation contract? ☐ Yes ☐ No
3. If your land is currently vacant or in agricultural production, are there any restrictions on the crop productivity of the land? That is, are there any reasons (i.e., poor soil, steep slopes) the land cannot support a profitable agricultural crop? Please explain in detail: _____

Special Project Information

1. Describe any amenities included in the project, such as park areas, open spaces, common recreation facilities, etc.(these also need to be shown on your site plan): Ø
2. Will the development occur in phases? ☐ Yes ☒ No
   If yes describe: _____
3. Do you have any plans for future additions, expansion or further activity related to or connected with this proposal? ☐ Yes ☒ No If yes, explain: _____
4. Are there any proposed or existing deed restrictions? ☐ Yes ☒ No
   If yes, please describe: _____

Energy Conservation Information

1. Describe any special energy conservation measures or building materials that will be incorporated into your project *: none

   *The county's Building Energy Efficient Structures (BEES) program can reduce your construction permit fees. Your building must exceed the California State Energy Standards (Title 24) in order to qualify for this program. If you are interested in more information, please contact the Building Services Division of the Department of Planning and Building at (805) 781-5600.

Environmental Information

1. List any mitigation measures that you propose to lessen the impacts associated with your project:
   Trees will be removed outside of the nesting season (noted as Feb 1 through April 15), or a pre-removal survey will be conducted to ensure no harm to nesting birds.

2. Are you aware of any unique, rare or endangered species (vegetation or wildlife) associated with the project site? ☐ Yes ☒ No
   If yes, please list: _____
3. Are you aware of any previous environmental determinations for all or portions of this property? ☐ Yes ☒ No
   If yes, please describe and provide "ED" number(s): _____

Other Related Permits

1. List all permits, licenses or government approvals that will be required for your project (federal, state and local): none

   (If you are unsure if additional permits are required from other agencies, please ask a member of the Planning Department staff currently assigned in either Current Planning or the Environmental Division.)

INDEX OF PLANS

STATE OF CALIFORNIA
DEPARTMENT OF TRANSPORTATION

PROJECT PLANS FOR CONSTRUCTION ON
STATE HIGHWAY
IN SAN LUIS OBISPO COUNTY AT THE INTERSECTION OF ROUTE 1 AND SHERIDAN ROAD

TO BE SUPPLEMENTED BY STANDARD PLANS DATED 2010

Dist	COUNTY	ROUTE	POST MILES TOTAL PROJECT	SHEET No.	TOTAL SHEETS
05	SLO	1	5.3/5.8		

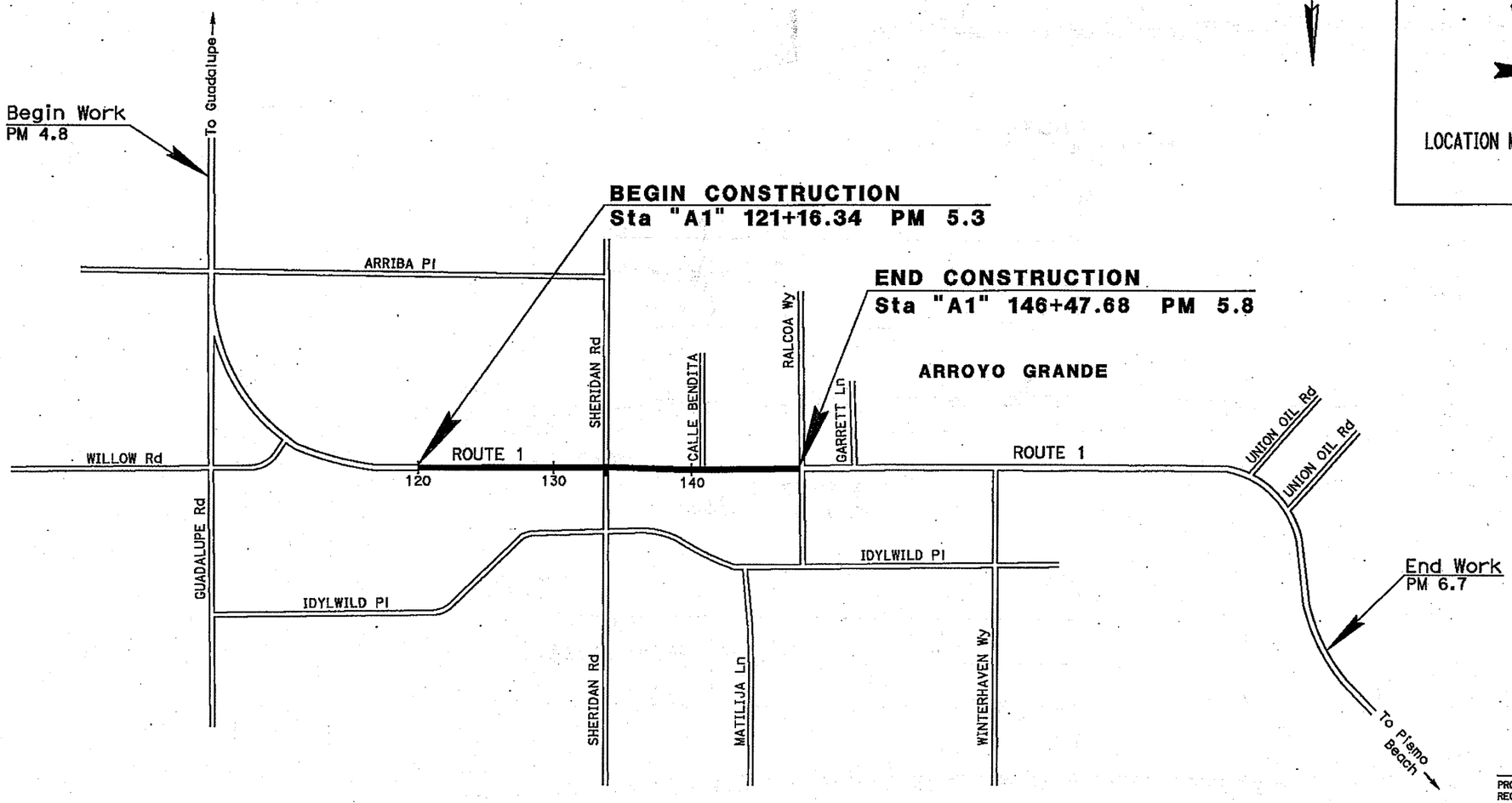

PROJECT ENGINEER DATE
REGISTERED CIVIL ENGINEER

REGISTERED PROFESSIONAL ENGINEER MARK S. LEICHTFUSS No. 69124 Exp. 6-30-16 CIVIL STATE OF CALIFORNIA

PLANS APPROVAL DATE

THE STATE OF CALIFORNIA OR ITS OFFICERS OR AGENTS SHALL NOT BE RESPONSIBLE FOR THE ACCURACY OR COMPLETENESS OF SCANNED COPIES OF THIS PLAN SHEET.

PROJECT MANAGER: AMY DONATELLO

DESIGN ENGINEER: MARK S. LEICHTFUSS

THE CONTRACTOR SHALL POSSESS THE CLASS (OR CLASSES) OF LICENSE AS SPECIFIED IN THE "NOTICE TO BIDDERS."

NO SCALE

CONTRACT No.	05-1C1704
PROJECT ID	0512000080

DATE PLOTTED => 15-JAN-2015
TIME PLOTTED => 09:23
LAST REVISION 03-28-12

Dist	COUNTY	ROUTE	POST MILES TOTAL PROJECT	SHEET No.	TOTAL SHEETS
05	SLO	1	5.3/5.8		

REGISTERED CIVIL ENGINEER DATE

PLANS APPROVAL DATE

THE STATE OF CALIFORNIA OR ITS OFFICERS OR AGENTS SHALL NOT BE RESPONSIBLE FOR THE ACCURACY OR COMPLETENESS OF SCANNED COPIES OF THIS PLAN SHEET.

REGISTERED PROFESSIONAL ENGINEER MARK S. LEICHTFUSS No. 69124 Exp. 6-30-16 CIVIL STATE OF CALIFORNIA

PAVEMENT CLIMATE REGION

CENTRAL COAST

STRUCTURAL SECTIONS:

1 [0.50' HMS (TYPE A) / 0.65' AB]

2 [0.50' HMA (TYPE A) / 0.35' AB]

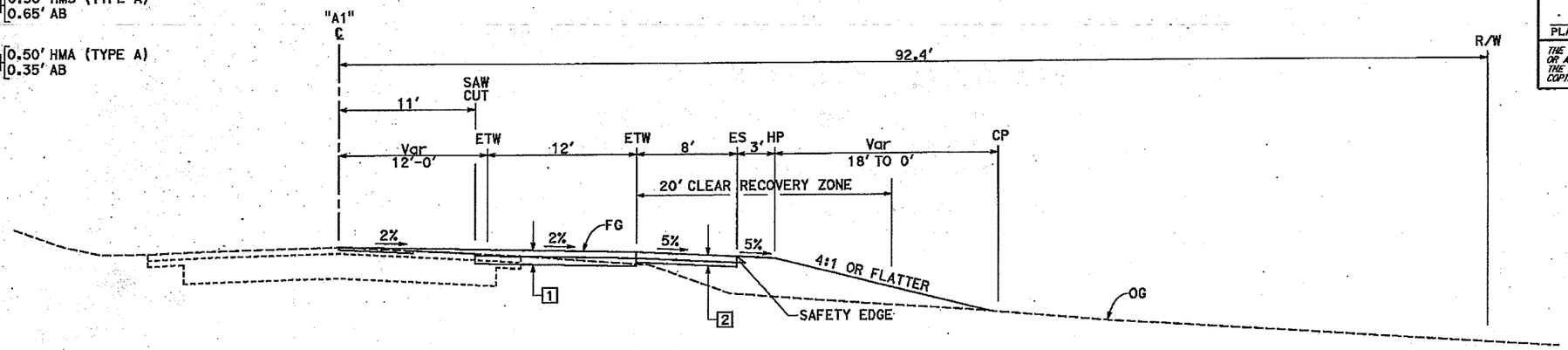

ROUTE 1
"A1" 134+89.69 TO "A1" 145+65

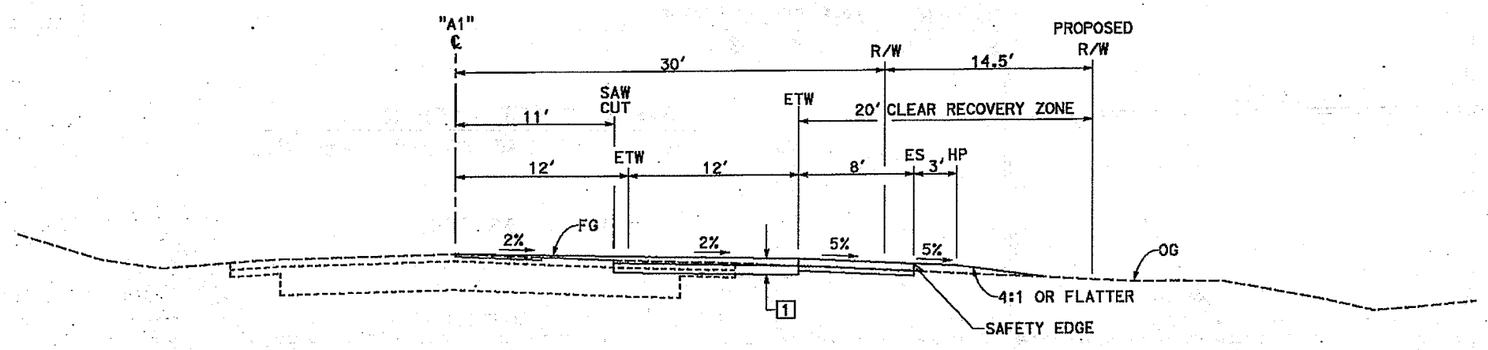

ROUTE 1
"A1" 130+35.98 TO "A1" 134+89.69

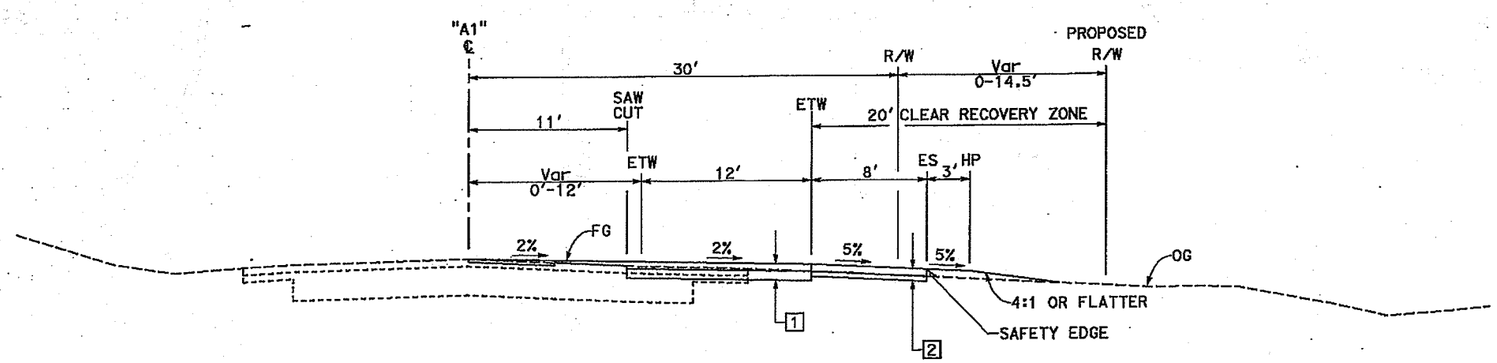

ROUTE 1
"A1" 121+16.34 TO "A1" 130+35.98

TYPICAL CROSS SECTIONS
NO SCALE

X-1

REVISED BY	DATE REVISED

CALCULATED-DESIGNED BY	CHECKED BY
QUAY CHESTER	MARK S. LEICHTFUSS

FUNCTIONAL SUPERVISOR: RON R. KRAEMER

STATE OF CALIFORNIA - DEPARTMENT OF TRANSPORTATION

Caltrans DESIGN

LAST REVISION 07-09-14 | DATE PLOTTED => 15-JAN-2015 | TIME PLOTTED => 09:23

Dist	COUNTY	ROUTE	POST MILES TOTAL PROJECT	SHEET No.	TOTAL SHEETS
05	SLO	1	5.3/5.8		

REGISTERED CIVIL ENGINEER DATE

PLANS APPROVAL DATE

REGISTERED PROFESSIONAL ENGINEER MARK S. LEICHTFUSS No. 69124 Exp. 6-30-16 CIVIL STATE OF CALIFORNIA

THE STATE OF CALIFORNIA OR ITS OFFICERS OR AGENTS SHALL NOT BE RESPONSIBLE FOR THE ACCURACY OR COMPLETENESS OF SCANNED COPIES OF THIS PLAN SHEET.

NOTE:

FOR ACCURATE RIGHT OF WAY DATA, CONTACT RIGHT OF WAY ENGINEERING AT THE DISTRICT OFFICE.

LEGEND:

TREE REMOVAL LIMIT

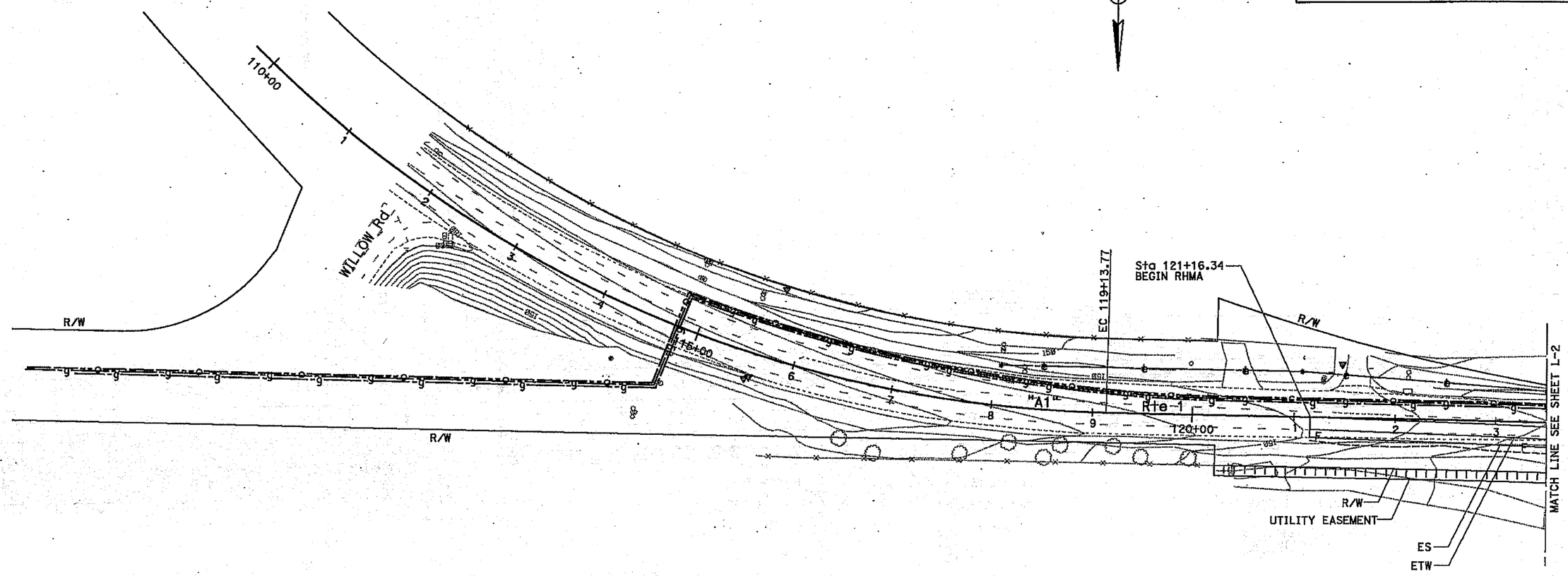

NO SCALE

LAYOUT L-1

STATE OF CALIFORNIA - DEPARTMENT OF TRANSPORTATION

Caltrans DESIGN

FUNCTIONAL SUPERVISOR: RON R. KRAEMER

CALCULATED-DESIGNED BY: QUAY CHESTER

CHECKED BY: MARK S. LEICHTFUSS

REVISED BY

DATE REVISED

LAST REVISION 07-09-14

DATE PLOTTED => 15-JAN-2015
TIME PLOTTED => 09:23

BORDER LAST REVISED 7/2/2010

USERNAME => s109144
DGN FILE => 0512000080ea001.dgn

RELATIVE BORDER SCALE IS IN INCHES 0 1 2 3

UNIT 1451

PROJECT NUMBER & PHASE 0512000000801

Dist	COUNTY	ROUTE	POST MILES TOTAL PROJECT	SHEET No.	TOTAL SHEETS
05	SLO	1	5.3/5.8		

REGISTERED CIVIL ENGINEER DATE

PLANS APPROVAL DATE

THE STATE OF CALIFORNIA OR ITS OFFICERS OR AGENTS SHALL NOT BE RESPONSIBLE FOR THE ACCURACY OR COMPLETENESS OF SCANNED COPIES OF THIS PLAN SHEET.

REGISTERED PROFESSIONAL ENGINEER MARK S. LEICHTFUSS No. 69124 Exp. 6-30-16 CIVIL STATE OF CALIFORNIA

NOTE:

FOR ACCURATE RIGHT OF WAY DATA, CONTACT RIGHT OF WAY ENGINEERING AT THE DISTRICT OFFICE.

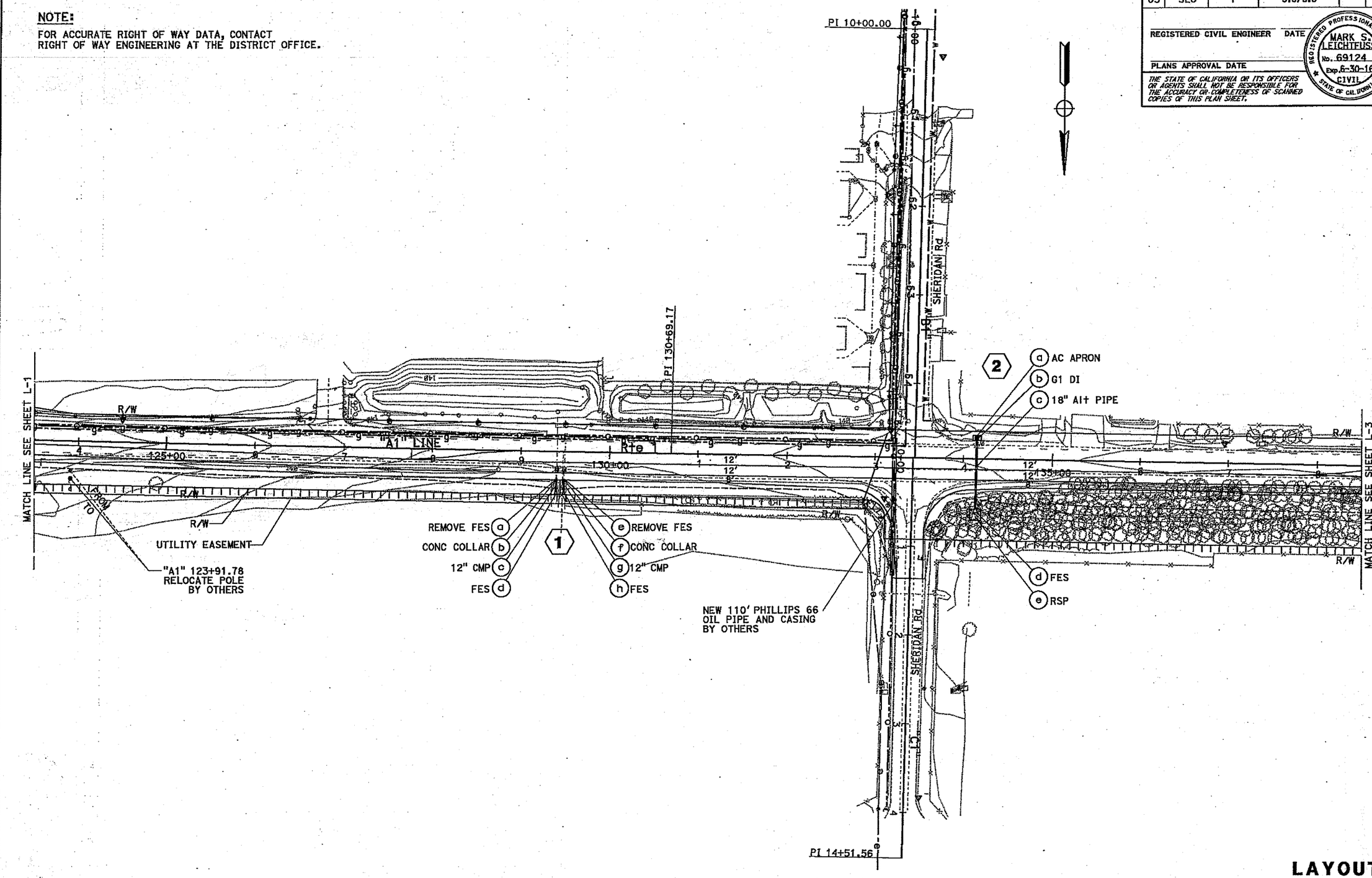

NO SCALE

LAYOUT L-2

STATE OF CALIFORNIA - DEPARTMENT OF TRANSPORTATION

Caltrans DESIGN

FUNCTIONAL SUPERVISOR: RON R. KRAEMER

CALCULATED-DESIGNED BY: QUAY CHESTER

CHECKED BY: MARK S. LEICHTFUSS

REVISED BY

DATE REVISED

LAST REVISION 07-09-14

DATE PLOTTED => 15-JAN-2015
TIME PLOTTED => 09:23

BORDER LAST REVISED 7/2/2010

USERNAME => s109144
DGN FILE => 0512000080ea002.dgn

RELATIVE BORDER SCALE IS IN INCHES 0 1 2 3

UNIT 1451

PROJECT NUMBER & PHASE 051200000801

Dist	COUNTY	ROUTE	POST MILES TOTAL PROJECT	SHEET No.	TOTAL SHEETS
05	SLO	1	5.3/5.8		

REGISTERED CIVIL ENGINEER DATE

PLANS APPROVAL DATE

THE STATE OF CALIFORNIA OR ITS OFFICERS OR AGENTS SHALL NOT BE RESPONSIBLE FOR THE ACCURACY OR COMPLETENESS OF SCANNED COPIES OF THIS PLAN SHEET.

REGISTERED PROFESSIONAL ENGINEER MARK S. LEICHTFUSS No. 69124 Exp. 6-30-16 CIVIL STATE OF CALIFORNIA

NOTE:

FOR ACCURATE RIGHT OF WAY DATA, CONTACT RIGHT OF WAY ENGINEERING AT THE DISTRICT OFFICE.

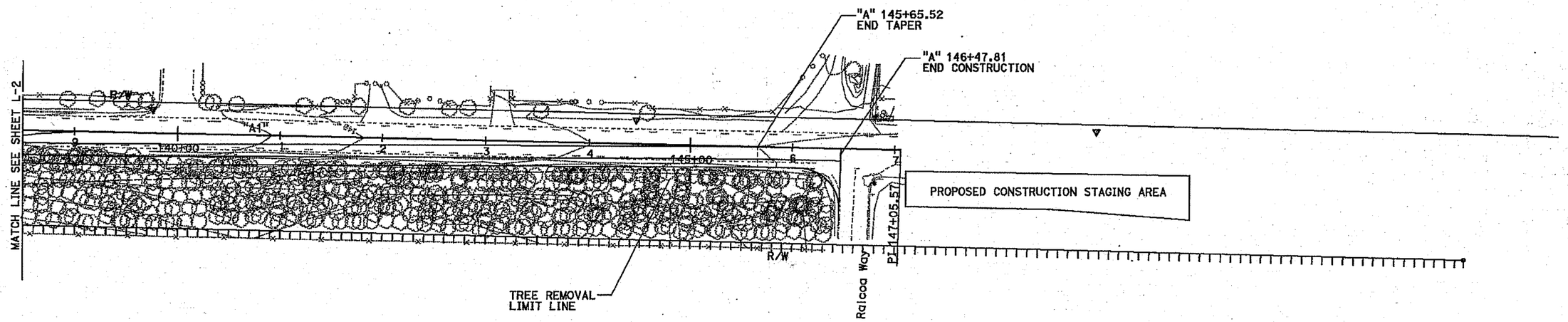

NO SCALE

LAYOUT L-3

LAST REVISION	DATE PLOTTED => 15-JAN-2015 TIME PLOTTED => 09:23
07-09-14	

CALCULATED-DESIGNED BY	REVISED BY
CHECKED BY	DATE REVISED
QUAY CHESTER	
MARK S. LEICHTFUSS	

FUNCTIONAL SUPERVISOR: RON R. KRAEMER

STATE OF CALIFORNIA - DEPARTMENT OF TRANSPORTATION

Caltrans DESIGN

Dist	COUNTY	ROUTE	POST MILES TOTAL PROJECT	SHEET No.	TOTAL SHEETS

REGISTERED CIVIL ENGINEER DATE

PLANS APPROVAL DATE

REGISTERED PROFESSIONAL ENGINEER No. Exp. CIVIL STATE OF CALIFORNIA

THE STATE OF CALIFORNIA OR ITS OFFICERS OR AGENTS SHALL NOT BE RESPONSIBLE FOR THE ACCURACY OR COMPLETENESS OF SCANNED COPIES OF THIS PLAN SHEET.

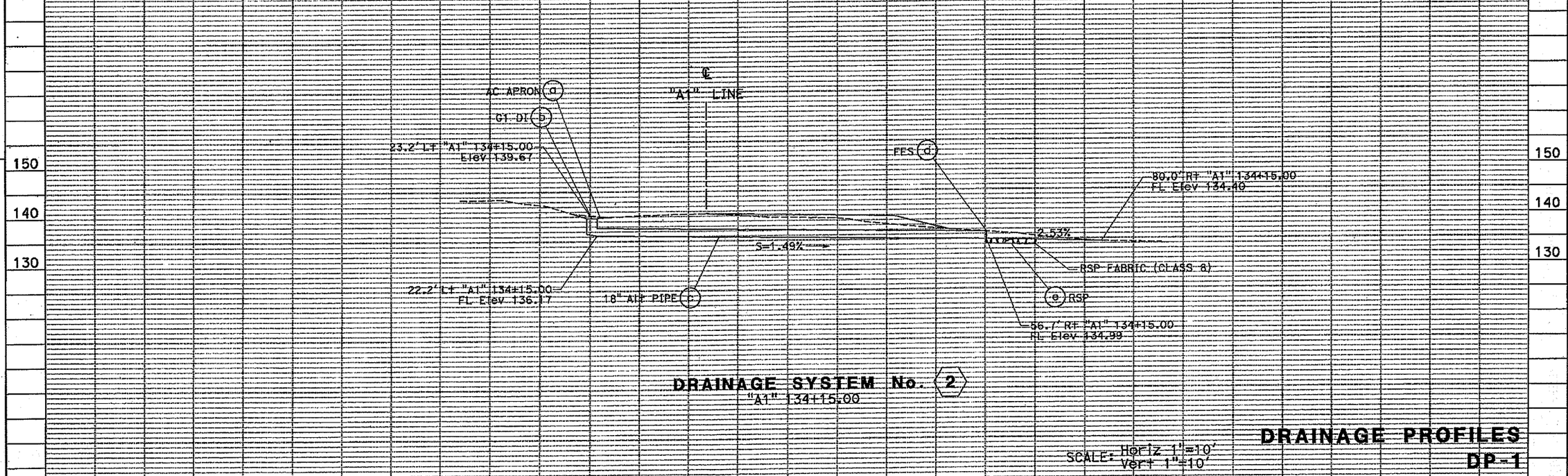

DRAINAGE SYSTEM No. 2
"A1" 134+15.00

SCALE: Horiz 1"=10'
Vert 1"=10'

DRAINAGE PROFILES
DP-1

REVISED BY | DATE REVISED | CALCULATED-DESIGNED BY | CHECKED BY | FUNCTIONAL SUPERVISOR

STATE OF CALIFORNIA - DEPARTMENT OF TRANSPORTATION

Caltrans

LAST REVISION 00-00-00 | DATE PLOTTED => 15-JAN-2015 | TIME PLOTTED => 09:23

BORDER LAST REVISED 7/2/2010 | USERNAME => a109144 | DGN FILE => 0512000080lb001.dgn | RELATIVE BORDER SCALE IS IN INCHES 0 1 2 3 | UNIT 0000 | PROJECT NUMBER & PHASE . 00000000001

Sheridan Left-turn Channelization
Project Site
New Roadway
fill
cut
Tree Removal Line
Utility Easement
February 4, 2015
0 50 100 200 Feet
N
Ralcoa Way
Sheridan Road
Calle Bendita
APN 091-174-040
existing detention basin
eucalyptus grove
Right-of-way
Right-of-way
Right-of-way
123 ft
80 ft
2540 ft
Construct new 18" culvert
Phillips 66 oil pipe and casing construction
Extend 2 existing 12" culverts
Utility easement
Relocate pole
to
from
1
1