SAN LUIS OBISPO COUNTY

DEPARTMENT OF PLANNING AND BUILDING

Promoting the wise use of land - Helping to build great communities

THIS IS A NEW PROJECT REFERRAL

DATE: 7/15/2015

TO: _____

FROM: Airlin Singewald (805-781-5198 or asingewald@co.slo.ca.us)
Coastal Team / Development Review

PROJECT DESCRIPTION: DRC2015-00011 VERIZON – Proposed minor use permit for a new 2' OD canister antenna mounted to an existing JPA pole. Associated equipment and meter ped at grade level. Site location is in the public right-of-way at the intersection of Dorset St and Whitehall Ave, Cambria. APN: Public right-of-way adjacent to 022-227-016.

Return this letter with your comments attached no later than 14 days from receipt of this referral. CACs please respond within 60 days. Thank you.

PART 1 - IS THE ATTACHED INFORMATION ADEQUATE TO COMPLETE YOUR REVIEW?

- ❑ YES (Please go on to PART II.)
- ❑ NO (Call me ASAP to discuss what else you need. We have only 10 days in which we must obtain comments from outside agencies.)

PART II - ARE THERE SIGNIFICANT CONCERNS, PROBLEMS OR IMPACTS IN YOUR AREA OF REVIEW?

- ❑ YES (Please describe impacts, along with recommended mitigation measures to reduce the impacts to less-than-significant levels, and attach to this letter.)
- ❑ NO (Please go on to PART III.)

PART III - INDICATE YOUR RECOMMENDATION FOR FINAL ACTION.

Please attach any conditions of approval you recommend to be incorporated into the project's approval, or state reasons for recommending denial.

IF YOU HAVE "NO COMMENT," PLEASE SO INDICATE, OR CALL.

_____

_____

_____

_____	_____	_____
Date	Name	Phone

976 OSOS STREET, ROOM 300 • SAN LUIS OBISPO • CALIFORNIA 93408 • (805) 781-5600 • TTY/TDD RELAY - 711

planning@co.slo.ca.us • FAX: (805) 781-5624 • http://www.slocounty.ca.gov/planning.htm

DRC2015-00011 VERIZON WIRELE

1. General APPLICATION fo

San Luis Obispo County Department of Planning and E

MINOR USE PERMIT

VERIZON - CELL SITE MODIFICATION - NEW 2' OD CANISTER ANTENNA MOUNTED TO AN /

APPLICATION TYPE CHECK ALL THAT APPLY

- ☐ Emergency Permit
- ☐ Tree Permit
- ☐ Zoning Clearance
- ☐ Site Plan
- ☑ Minor Use Permit
- ☐ Conditional Use Permit/Development Plan
- ☐ Variance
- ☐ Surface Mining/Reclamation Plan
- ☐ Curb, Gutter & Sidewalk Waiver
- ☐ Other
- ☐ Modification to approved land use permit

APPLICANT INFORMATION *Check box for contact person assigned to this project*

☐ Landowner Name N/A - public ROW (JPA) Daytime Phone N/A

Mailing Address N/A Zip N/A

Email Address: N/A

☐ Applicant Name Verizon Wireless Daytime Phone

Mailing Address 2785 Mitchell Dr., #9, Walnut Creek Zip 94598

Email Address:

Sequoia Deployment Services, Inc.

☑ Agent Name Contact: Aaron M Anderson Daytime Phone 562-485-8012

Mailing Address 22471 Aspan St., #290, Lake Forest Zip 92630

Email Address: aaron.anderson@sequoia-ds.com

PROPERTY INFORMATION

Total Size of Site: N/A Assessor Parcel Number(s): across from APN 022-227-016

Legal Description: N/A (public ROW)

Address of the project (if known): near Dorset St. & Whitehall Ave., Cambria, CA 93428

Directions to the site - describe first with name of road providing primary access to the site, then nearest roads, landmarks, etc.: Property located near the intersection of Dorset Street and Whitehall Avenue

Describe current uses, existing structures, and other improvements and vegetation on the property: Property adjacent to single-family residential uses.

PROPOSED PROJECT

Describe the proposed project (inc. sq. ft. of all buildings): New 2' OD canister antenna mounted to an existing JPA pole. Associated equipment and meter ped at grade level.

LEGAL DECLARATION

I, the owner of record of this property have completed this form accurately and declare that all statement here are true. I do hereby grant official representatives of the county authorization to inspect the subject property.

Property owner signature N/A (public ROW) Date

FOR STAFF USE ONLY

Reason for Land Use Permit:

2. LAND USE PERMIT APPLICATION

San Luis Obispo County Department of Planning and Building File No _____

Type of project: ☑ Commercial ☐ Industrial ☐ Residential ☐ Recreational ☐ Other

Describe any modifications/adjustments from ordinance needed and the reason for the request (if applicable): N/A

Describe existing and future access to the proposed project site: Access to project site from public right-of-way off of Whitehall Avenue.

Surrounding parcel ownership: Do you own adjacent property? ☐ Yes ☑ No
If yes, what is the acreage of all property you own that surrounds the project site?: _____

Surrounding land use: What are the uses of the land surrounding your property (when applicable, please specify all agricultural uses):
North: Single-Family Residential South: Single-Family Residential
East: Single-Family Residential West: Single-Family Residential

For all projects answer the following:
Square footage and percentage of the total site (approximately) that will be used for the following:
Buildings: N/A sq. feet N/A % ~~Landscaping: _____ sq. feet _____ %~~
Paving: ~15 sq. feet <1 % ~~Other (specify) _____~~
Total area of all paving and structures: ~15 ☑ sq. feet ☐ acres
Total area of grading or removal of ground cover: ~800 ☑ sq. feet ☐ acres
Number of parking spaces proposed: 0 Height of tallest structure: 30.8' AGL
Number of trees to be removed: 0 Type: N/A
Setbacks: Front N/A Right N/A Left N/A Back N/A

~~**Proposed water source:** ☐ On-site well ☐ Shared well ☐ Other _____~~
~~☐ Community System - List the agency or company responsible for provision: _____~~
~~Do you have a valid will-serve letter? ☐ Yes If yes, please submit copy ☐ No~~

~~**Proposed sewage disposal:** ☐ Individual on-site system ☐ Other _____~~
~~☐ Community System - List the agency or company responsible for sewage disposal: _____~~
~~Do you have a valid will-serve letter? ☐ Yes If yes, please submit copy ☐ No~~

Fire Agency: - List the agency responsible for fire protection: Cal-Fire

For commercial/industrial projects answer the following:
Total outdoor use area: ~15 ☑ sq. feet ☐ acres
Total floor area of all structures including upper stories: ~15 sq. feet
~~**For residential projects, answer the following:**~~
~~Number of residential units: _____ Number of bedrooms per unit: _____~~
~~Total floor area of all structures including upper stories, but not garages and carports: _____~~
~~Total of area of the lot(s) minus building footprint and parking spaces: _____~~

3. ENVIRONMENTAL DESCRIPTION FORM

San Luis Obispo County Department of Planning and Building File No _____

The California Environmental Quality Act (CEQA) requires all state and local agencies to consider and mitigate environmental impacts for their own actions and when permitting private projects. The Act also requires that an environmental impact report (EIR) be prepared for all actions that may significantly affect the quality of the environment. The information you provide on this form will help the Department of Planning and Building determine whether or not your project will significantly affect the quality of the environment.

To ensure that your environmental review is completed as quickly as possible, please remember to:

Answer **ALL** of the questions as accurately and completely as possible.

Include any additional information or explanations where you believe it would be helpful or where required. Include additional pages if needed.

If you are requesting a land division or a re-zoning, be sure to include complete information about future development that may result from the proposed land division or rezoning.

Include references to any reports or studies you are aware of that might be relevant to the questions asked or the answers you provide.

Should a determination be made that the information is inaccurate or insufficient, you will be required to submit additional information upon request.

Physical Site Characteristic Information

Your site plan will also need to show the information requested here

1. Describe the topography of the site:

   Level to gently rolling, 0-10% slopes: N/A acres

   Moderate slopes of 10-30%: N/A acres

   Steep slopes over 30%: N/A acres

2. Are there any springs, streams, lakes or marshes on or near the site? ☐ Yes ☑ No

   If yes, please describe:_____

3. Are there any flooding problems on the site or in the surrounding area ☐ Yes ☑ No

   If yes, please describe:_____

4. Has a drainage plan been prepared? ☐ Yes ☑ No

   If yes, please include with application.

5. Has there been any grading or earthwork on the project site? ☐ Yes ☑ No

   If yes, please explain:_____

6. Has a grading plan been prepared? ☐ Yes ☑ No

   If yes, please include with application.

7. Are there any sewer ponds/waste disposal sites on/adjacent to the project? ☐ Yes ☑ No

8. Is a railroad or highway within 300 feet of your project site? ☐ Yes ☑ No

9. Can the proposed project be seen from surrounding public roads? ☑ Yes ☐ No

   If yes, please list: Dorset Street & Whitehall Avenue

Water Supply Information

1. What type of water supply is proposed?
   ☐ Individual well ☐ Shared well ☐ Community water system
2. What is the proposed use of the water?
   ☐ Residential ☐ Agricultural: explain _____
   ☐ Commercial/Office: explain _____
   ☐ Industrial: explain _____
3. What is the expected daily water demand associated with the project? _____
4. How many service connections will be required? _____
5. Do operable water facilities exist on the site?
   ☐ Yes ☐ No If yes, please describe: _____
6. Has there been a sustained yield test on proposed or existing wells?
   ☐ Yes ☐ No If yes please attach
7. Does water meet the Health Agency's quality requirements?
   Bacteriological? ☐ Yes ☐ No Chemical? ☐ Yes ☐ No
   Physical? ☐ Yes ☐ No Water analysis report submitted? ☐ Yes ☐ No
8. Please check if any of the following have been completed on the subject property and/or submitted to County Environmental Health.
   ☐ Well Driller's Letter ☐ Water Quality Analysis ☐ OK or ☐ Problems
   ☐ Will Serve Letter ☐ Pump Test _____ Hours _____ GPM
   ☐ Surrounding Well Logs ☐ Hydrologic Study ☐ Other _____

Please attach any letters or documents to verify that water is available for the proposed project.

Sewage Disposal Information

If an on-site (individual) subsurface sewage disposal system will be used:

1. Has an engineered percolation test been accomplished?
   ☐ Yes ☐ No If yes, please attach a copy.
2. What is the distance from proposed leach filed to any neighboring water wells? _____ feet
3. Will subsurface drainage result in the possibility or effluent reappearing in surface water or on adjacent lands, due to steep slopes, impervious soil layers or other existing conditions?
   ☐ Yes ☐ No
4. Has a piezometer test been completed? ☐ Yes ☐ No
5. Will a Waste Discharge Permit from the Regional Water Quality Control Board be required?
   ☐ Yes ☐ No
   (a waste discharge permit is typically needed when you exceed 2,500 gallons per day)

If a community sewage disposal system is to be used:

1. Is this project to be connected to an existing sewer line?
   ☐ Yes ☐ No Distance to nearest sewer line: _____
   Location of connection: _____
2. What is the amount of proposed flow? _____ g.p.d.
3. Does the existing collection treatment and disposal system have adequate additional capacity to accept the proposed flow? ☐ Yes ☐ No

Solid Waste Information

1. What type of solid waste will be generated by the project? ☐ Domestic ☐ Industrial ☐ Agricultural ☐ Other, please explain? _____
2. Name of Solid Waste Disposal Company: _____
3. Where is the waste disposal storage in relation to buildings? _____
4. Does your project design include an area for collecting recyclable materials and/or composting materials? ☐ Yes ☐ No

Community Service Information

1. Name of School District: N/A
2. Location of nearest police station: N/A
3. Location of nearest fire station: N/A
4. Location of nearest public transit stop: N/A
5. Are services (grocery / other shopping) within walking distance of the project? ☐ Yes ☑ No
   If yes, what is the distance? _____ feet / miles

Historic and Archeological Information

1. Please describe the historic use of the property: N/A
2. Are you aware of the presence of any historic, cultural or archaeological materials on the project site or in the vicinity? ☐ Yes ☑ No
   If yes, please describe: _____
3. Has an archaeological surface survey been done for the project site? ☐ Yes ☑ No
   If yes, please include **two** copies of the report with the application.

Commercial/Industrial Project Information

Only complete this section if you are proposing a commercial or industrial project or zoning change.

1. Days of Operation: 365 days/year Hours of Operation: 24 hours/day
2. How many people will this project employ? None. Unstaffed.
3. Will employees work in shifts? ☐ Yes ☑ No
   If yes, please identify the shift times and number of employees for each shift _____
4. Will this project produce any emissions (i.e. gasses, smoke, dust, odors, fumes, vapors,)?
   ☐ Yes ☑ No
   If yes, please explain: _____
5. Will this project increase the noise level in the immediate vicinity? ☐ Yes ☑ No
   If yes, please explain: _____
   (If loud equipment is proposed, please submit manufacturers estimate on noise output)
6. What type of industrial waste materials will result from the project? Explain in detail:

7. Will hazardous products be used or stored on-site? ☑ Yes ☐ No
If yes, please describe in detail: Lead-acid batteries.

8. Has a traffic study been prepared? ☐ Yes ☑ No If yes, please attach a copy
9. Please estimate the number of employees, customer and other project-related traffic trips to or from the project.
Between 7:00 - 9:00 a.m. 0 Between 4:00 to 6:00 p.m. 0
10. Are you proposing any special measures (carpooling, public transit, telecommuting) to reduce automobile trips by employees?
☐ Yes ☑ No If yes, please specify what you are proposing _____

11. Are you aware of any potentially problematic roadway conditions that may exist or result from the proposed project, such as poor sight distance at access points, connecting with the public road? ☐ Yes ☑ No
If yes, please describe _____

Agricultural Information

Only complete this section: 1) within the Agricultural land use category or 2) your site is currently in agricultural production.

1, Is the site currently in Agricultural Preserve (Williamson Act)? ☐ Yes ☑ No
2. If yes, is the site currently under land conservation contract? ☐ Yes ☑ No
3. If your land is currently vacant or in agricultural production, are there any restrictions on the crop productivity of the land? That is, are there any reasons (i.e. poor soil, steep slopes) the land cannot support a profitable agricultural crop? Please explain in detail: N/A

Special Project Information

1. Describe any amenities included in the project, such as park areas, open spaces, common recreation facilities, etc.(these also need to be shown on your site plan): N/A
2. Will the development occur in phases? ☐ Yes ☑ No
If yes describe: _____
3. Do you have any plans for future additions, expansion or further activity related to or connected with this proposal? ☐ Yes ☑ No
If yes, explain: _____
4. Are there any proposed or existing deed restrictions? ☐ Yes ☑ No
If yes, please describe: _____

Energy Conservation Information

1. Describe any special energy conservation measures or building materials that will be incorporated into your project✱: N/A

✱ The county's Building Energy Efficient Structures (BEES) program can reduce your construction permit fees. Your building must exceed the California State Energy Standards (Title 24) in order to qualify for this program. If you are interested in more information, please contact the Building Services Division of the Department of Planning and Building at (805) 781-5600.

Environmental Information

1. List any mitigation measures that you propose to lessen the impacts associated with your project: The antennas will be completely concealed within a 2' OD cannister and all pole mounted equipment will be painted to match the existing pole.

2. Are you aware of any unique, rare or endangered species (vegetation or wildlife) associated with the project site? ☐ Yes ☑ No
   If yes, please list:_____

3. Are you aware of any previous environmental determinations for all or portions of this property? ☐ Yes ☑ No
   If yes, please describe and provide "ED" number(s): _____

Other Related Permits

1. List all permits, licenses or government approvals that will be required for your project (federal, state and local): County of SLO building and electrical permits

(If you are unsure if additional permits are required from other agencies, please ask a member of department staff currently assigned in either current planning or the environmental division)

6. SUMMARY SHEET - RF EXPOSURE

San Luis Obispo County Department of Planning and Building File No _____

SUMMARY SHEET FOR RF EXPOSURE

This sheet should accompany the report required by Sections 22.30.180 and 23.08.284a(2)

Land Owner: N/A (public ROW)

Applicant: Verizon Wireless

APN: adjacent to APN 022-227-030

1. Is this the only transmitting facility proposed or permitted on this property?

   ☑ Yes ☐ No (please answer questions 7 - 9)

2. Structure type ☐ Freestanding ☐ Building/Roof mounted ☑ Other
3. Will the lowest point of the antenna be at least 10 meters above the ground? ☑ Yes ☐ No
4. Please indicate height above ground of lowest point of the antenna 33.5 ft
5. Indicate the estimated exposure from this facility 0.041 mW/cm^2
6. What percent of the FCC guidelines does this represent? 5.7%

CUMULATIVE ANALYSIS

7. ~~Enter number~~ of transmitting facilities on site: _____
8. Indicate the total estimated RF ~~exposure from~~ this site: _____
9. What percent of the FCC guidelines does this represent? _____

PROPOSED MITIGATION

_____

_____

FOR MORE INFORMATION

For questions, contact Airlin Singewald, County Planner, at (805) 781-5198 or by email: asingewald@co.slo.ca.us.

On-site pre-application meetings can be arranged to discuss design issues and potential locations. We encourage you to schedule a pre-application meeting in advance of completing lease negotiations and applications for new wireless communications facilities.

verizon wireless

CAMBRIA SC4

SOUTHWEST WHITEHALL AVENUE CAMBRIA CA 93428

ARTISTIC engineering
AEsims.com
877.9AE.sims

VIEW 1

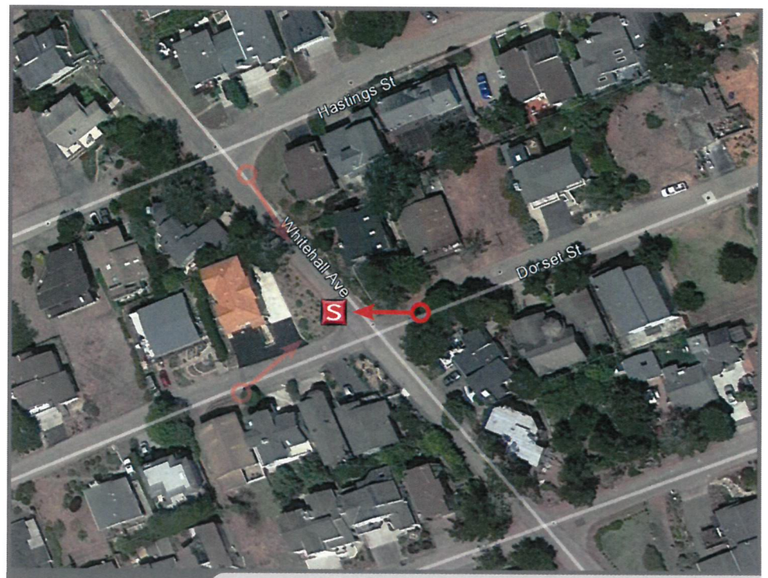

LOCATION

©2015 Google Maps

EXISTING

PROPOSED LOOKING WEST FROM DORSET STREET

ACCURACY OF PHOTO SIMULATION BASED UPON INFORMATION PROVIDED BY PROJECT APPLICANT.

CAMBRIA SC4

SOUTHWEST WHITEHALL AVENUE CAMBRIA CA 93428

ARTISTIC engineering
AEsims.com
877.9AE.sims

VIEW 2

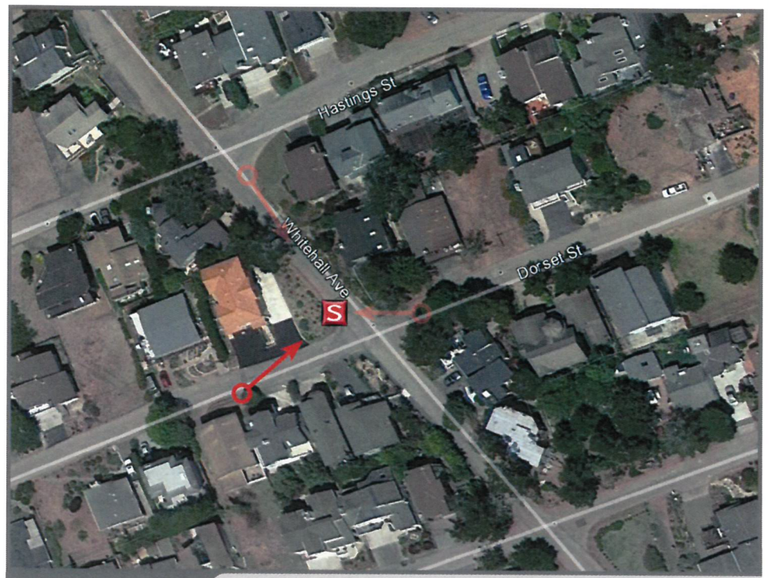

LOCATION

©2015 Google Maps

EXISTING

PROPOSED LOOKING WEST FROM DORSET STREET

ACCURACY OF PHOTO SIMULATION BASED UPON INFORMATION PROVIDED BY PROJECT APPLICANT.

CAMBRIA SC4

SOUTHWEST WHITEHALL AVENUE CAMBRIA CA 93428

ARTISTIC engineering
AEsims.com
877.9AE.sims

VIEW 3

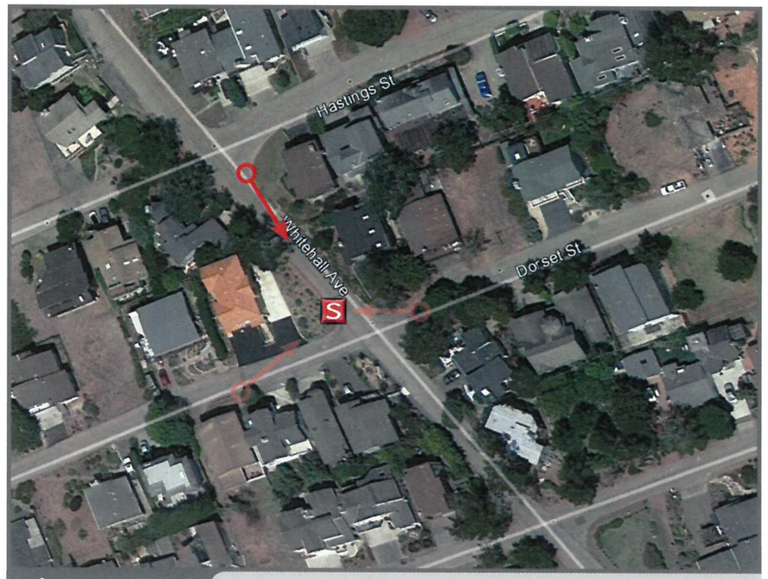

LOCATION

©2015 Google Maps

EXISTING

PROPOSED LOOKING WEST FROM DORSET STREET

ACCURACY OF PHOTO SIMULATION BASED UPON INFORMATION PROVIDED BY PROJECT APPLICANT.

CAMBRIA SC4

WEST SIDE WHITEHALL AVENUE
CAMBRIA, CA 93428

LATITUDE:	35° 33' 47.79" N
LONGITUDE:	121° 06' 17.29" W
POLE NO.:	397
LOCATION CODE.:	291687

SITE INFORMATION

PROPERTY OWNER:	NORTHERN CALIFORNIA JOINT POLE ASSOCIATION 1800 SUTTER STREET, STE. 830 CONCORD, CA 94520 CONTACT: JONATHAN VAUGHAN JONATHAN-NCJPA@SBCGLOBAL.NET PHONE: (925) 681-0378
APPLICANT: ADDRESS:	VERIZON WIRELESS 2785 MITCHELL DRIVE, BLDG 9 WALNUT CREEK, CA 94598
LATITUDE:	35° 33' 47.79" N
LONGITUDE:	121° 06' 17.29" W
LAT/LONG TYPE:	NAD-83
CURRENT USE:	UTILITY POLE IN THE PUBLIC RIGHT-OF-WAY
ASSESSOR'S PARCEL NO.:	N/A- ROW (ADJACENT TO APN 022-227-016)
ZONING JURISDICTION:	COUNTY OF SAN LUIS OBISPO
COUNTY:	SAN LUIS OBISPO COUNTY
PROPOSED USE:	UNMANNED TELECOMMUNICATIONS FACILITY
PROPOSED ANTENNNA TIP HEIGHT:	33'-6" AGL

PROJECT TEAM

LEASING:
SEQUOIA DEPLOYMENT SERVICES INC
22471 ASPAN STREET, STE. 290
LAKE FOREST, CA 92630
CONTACT: THERESE GARCIA
THERESE.GARCIA@SEQUOIA-DS.COM
PHONE: (949) 873-4271

PLANNING:
SEQUOIA DEPLOYMENT SERVICES INC
22471 ASPAN STREET, STE. 290
LAKE FOREST, CA 92630
CONTACT: AARON ANDERSON
AARON.ANDERSON@SEQUOIA-DS.COM
PHONE: (562) 485-8012

ENGINEER:
M.SQUARED ENGINEERS
1387 CALLE AVANZADO
SAN CLEMENTE, CA 92673
CONTACT: MICHAEL MONTELLO
PHONE: (619) 997-4012
www.msquaredengineers.com

RF ENGINEER:
VERIZON WIRELESS
2785 MITCHELL DRIVE, BLDG 9
WALNUT CREEK, CA 94598
CONTACT: DEWAYNE BONHAM
DEWAYNE.BONHAM@VERIZONWIRELESS.COM
PHONE: (510) 414-8896

CONSTRUCTION MANAGER:
SEQUOIA DEPLOYMENT SERVICES INC
22471 ASPAN STREET, STE. 290
LAKE FOREST, CA 92630
CONTACT: PETE SHUBIN
PETE.SHUBIN@SEQUOIA-DS.COM
PHONE: (714) 478-3197

VICINITY MAP

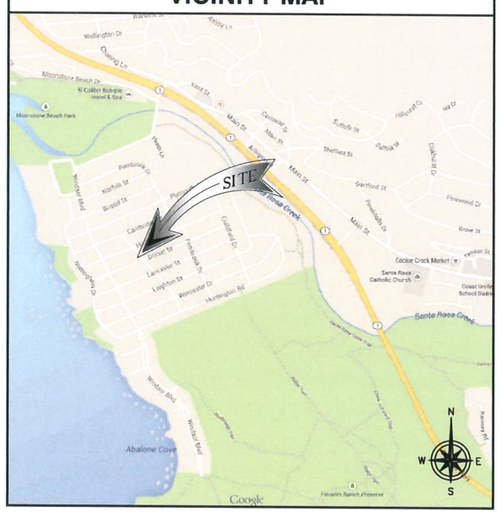

DRIVING DIRECTIONS

DIRECTIONS FROM WALNUT CREEK VERIZON OFFICE:

1. GET ON I-680 SOUTH FROM YGNACIO OAK GROVE ROAD
2. TAKE THE EXIT ONTO US-101 SOUTH TOWARD LOS ANGELES
3. TAKE THE CA-46 WEST EXIT TOWARD CAMBRIA
4. TURN RIGHT ONTO CA-46 WEST/GREEN VALLEY ROAD
5. TURN RIGHT ONTO CA-1 NORTH
6. TURN LEFT ONTO WINDSOR BOULEVARD
7. TURN LEFT ONTO CAMBRIDGE STREET
8. TAKE THE FIRST RIGHT ONTO WHITEHALL AVENUE
9. DESTINATION WILL BE ON THE RIGHT

PROJECT DESCRIPTION

VERIZON PROPOSES NEW WIRELESS INSTALLATION. THE SCOPE WILL CONSIST OF THE FOLLOWING:

- INSTALL (1) PROPOSED VERIZON WIRELESS POLE-MOUNTED CYLINDRICAL ANTENNA
- INSTALL (1) PROPOSED VERIZON WIRELESS POLE MOUNTING KIT
- INSTALL (2) PROPOSED VERIZON WIRELESS POLE-MOUNTED REMOTE RADIO HEAD
- INSTALL (1) PROPOSED VERIZON WIRELESS LIT FIBER CABINET & PAD
- INSTALL (1) PROPOSED VERIZON WIRELESS SLIMLINE METER PEDESTAL & PAD
- INSTALL (1) PROPOSED VERIZON WIRELESS DISCONNECT SWITCH
- INSTALL (1) PROPOSED VERIZON WIRELESS GPS
- INSTALL (1) PROPOSED VERIZON WIRELESS HANDHOLE
- INSTALL (2) PROPOSED VERIZON WIRELESS STAND-OFF BRACKET
- INSTALL (2) PROPOSED VERIZON WIRELESS 4" PVC RISER
- INSTALL (1) PROPOSED VERIZON WIRELESS 2" PVC RISER
- INSTALL (1) PROPOSED VERIZON WIRELESS UNDERGROUND POWER CONDUIT
- INSTALL (1) PROPOSED VERIZON WIRELESS UNDERGROUND FIBER CONDUIT

GENERAL NOTES

THE FACILITY IS UNMANNED AND NOT FOR HUMAN HABITATION. HANDICAPPED ACCESS REQUIREMENTS ARE NOT REQUIRED IN ACCORDANCE WITH THE 2013 CALIFORNIA BUILDING CODE. A TECHNICIAN WILL VISIT THE SITE AS REQUIRED FOR ROUTINE MAINTENANCE. THE PROJECT WILL NOT RESULT IN ANY SIGNIFICANT DISTURBANCE OR EFFECT ON DRAINAGE; NO SANITARY SEWER SERVICE, POTABLE WATER, OR TRASH DISPOSAL IS REQUIRED AND NO COMMERCIAL SIGNAGE IS NEW.

APPLICABLE CODES

ALL WORK AND MATERIALS SHALL BE PERFORMED AND INSTALLED IN ACCORDANCE WITH THE CURRENT EDITIONS OF THE FOLLOWING CODES AS ADOPTED BY THE LOCAL GOVERNING AUTHORITIES:

- CALIFORNIA ADMINISTRATIVE CODE (INCL TITLE 24 & 25)
- 2013 CALIFORNIA BUILDING CODE
- CITY/COUNTY ORDINANCES
- BUILDING OFFICIALS & CODE ADMINISTRATORS (BOCA)
- 2013 CALIFORNIA MECHANICAL CODE
- ANSI/EIA-222-F LIFE SAFETY CODE NFPA-101
- 2013 CALIFORNIA PLUMBING CODE
- 2013 CALIFORNIA ELECTRICAL CODE
- 2013 LOCAL BUILDING CODE

DO NOT SCALE DRAWINGS

SUBCONTRACTOR SHALL VERIFY ALL PLANS, EXISTING DIMENSIONS & FIELD CONDITIONS ON THE JOB SITE & SHALL IMMEDIATELY NOTIFY THE ENGINEER IN WRITING OF ANY DISCREPANCIES BEFORE PROCEEDING WITH THE WORK OR BE RESPONSIBLE FOR SAME.

811 Dig Alert
Know what's below. Call before you dig.
Call Two Working Days Before You Dig!
811 / 800-227-2600
digalert.org

ZONING DRAWING

IF USING 11"X17" PLOT, DRAWINGS WILL BE HALF SCALE

DRAWING INDEX

SHEET NO:	SHEET TITLE
T-1	TITLE SHEET
LS-1	LAND SURVEY
A-1	SITE PLAN
A-2	ANTENNA AND EQUIPMENT LAYOUT
A-3	ELEVATIONS
A-4	ELEVATIONS
A-5	EQUIPMENT DETAILS

APPROVALS

THE FOLLOWING PARTIES HEREBY APPROVE AND ACCEPT THESE DOCUMENTS & AUTHORIZE THE SUBCONTRACTOR TO PROCEED WITH THE CONSTRUCTION DESCRIBED HEREIN. ALL DOCUMENTS ARE SUBJECT TO REVIEW BY THE LOCAL BUILDING DEPARTMENT & MAY IMPOSE CHANGES OR MODIFICATIONS.

LANDLORD:		DATE:
PROJECT MANAGER:		DATE:
CONSTRUCTION MANAGER:	DENNIS RAINES	DATE:
RF ENGINEER:	DEWAYNE BONHAM	DATE: 2/11/15
SITE ACQUISITION:	JASON COLON	DATE: 2/10/15
ZONING MANAGER:		DATE:
UTILITY COORDINATOR:		DATE:
NETWORK OPERATIONS:		DATE:

verizon wireless
2785 MITCHELL DR., BLDG 9,
WALNUT CREEK, CA 94598

SEQUOIA DEPLOYMENT SERVICES, INC.

m.squared ENGINEERS
1387 CALLE AVANZADO
SAN CLEMENTE, CA 92673

LOCATION NO:	291687
DRAWN BY:	MJM
CHECKED BY:	MM

REV	DATE	DESCRIPTION
C	04/06/2015	100% ZD'S FOR REVIEW
B	02/26/2014	95% ZD'S FOR REVIEW
A	12/22/2014	90% ZD'S FOR REVIEW

IT IS A VIOLATION OF LAW FOR ANY PERSON, UNLESS THEY ARE ACTING UNDER THE DIRECTION OF A LICENSED PROFESSIONAL ENGINEER, TO ALTER THIS DOCUMENT.

CAMBRIA SC4

WEST SIDE WHITEHALL AVENUE
CAMBRIA, CA 93428
(SMALL CELL)

SHEET TITLE
TITLE SHEET

SHEET NUMBER
T-1

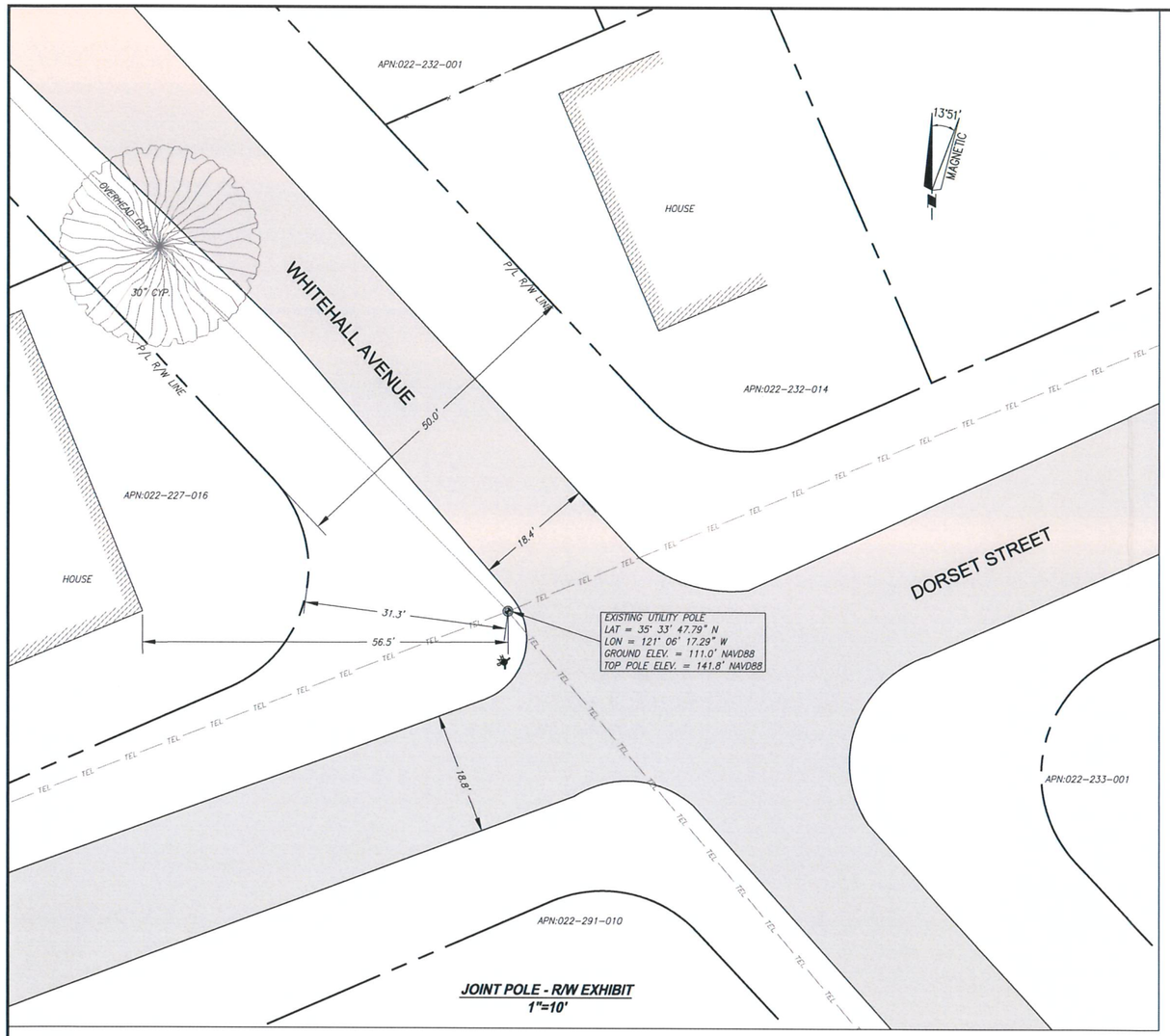

JOINT POLE - R/W EXHIBIT
1"=10'

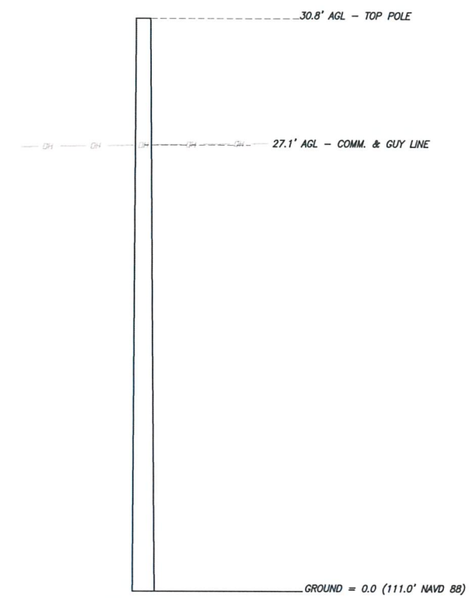

JOINT POLE DETAIL
N. T. S.

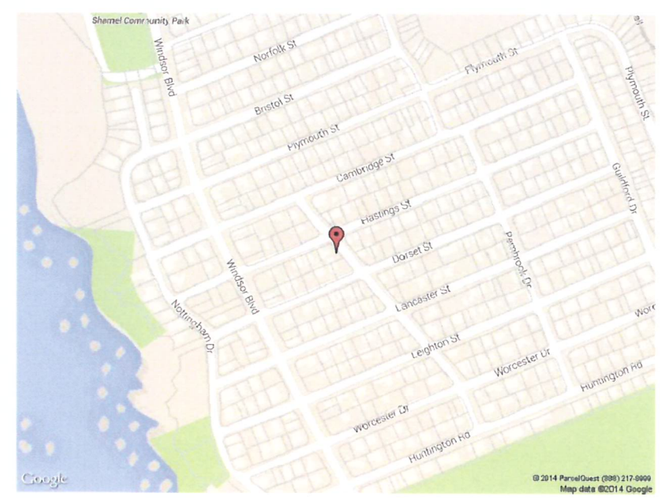

VICINITY MAP
N. T. S.

GEODETIC LOCATION

DATE OF SURVEY: OCTOBER 18, 2014
SITE NUMBER / NAME: VZW CAMBRIA SC-2
TYPE: EXISTING UTILITY POLE
SITE ADDRESS: WEST SIDE WHITEHALL AV.
ADJACENT TO APN: 022-227-016
CAMBRIA, CA. 93428

I, TIMOTHY SCHAD, HEREBY CERTIFY THE GEODETIC COORDINATES AT THE CENTER OF THE EXISTING UTILITY POLE TO BE:

LATITUDE= 35° 33' 47.79"N (NAD83)
LONGITUDE= 121° 06' 17.29"W (NAD83)

GROUND ELEVATION= 111.0' NAVD88
TOP OF POLE ELEVATION= 141.8' NAVD88

THE ACCURACY STANDARDS FOR THIS CERTIFICATION ARE AS FOLLOWS:

GEODETIC COORDINATES: +/- FIFTEEN (15) FEET (NAD-83)
ELEVATIONS: +/- THREE (3) FEET (NAVD-88)

SURVEY NOTES

1. ALL LATITUDES AND LONGITUDES ARE NAD 83, ALL ELEVATIONS ARE NAVD 88 (UNLESS NOTED OTHERWISE).

2. ALL BOUNDARY INFORMATION SHOWN HEREON HAS BEEN COMPILED FROM RECORD DATA. THIS IS NOT A BOUNDARY SURVEY.

3. DATE OF FIELD SURVEY OCTOBER 18, 2014.

4. NO PRELIMINARY TITLE REPORT HAS BEEN PROVIDED, ANY EASEMENTS OR OTHER TITLE RELATED ISSUES NOT INCLUDED IN SAID REPORT WHICH ARE PART OF THE TITLE PROCESS MAY OR MAY NOT HAVE BEEN ADDRESSED, TIMOTHY F. SCHAD, L.S. ACCEPTS NO RESPONSIBILITY OR LIABILITY FOR BOUNDARY OR TITLE ITEMS ADDRESSED HEREON. THIS IS NOT A BOUNDARY SURVEY.

verizonwireless
2785 Mitchell Drive
Suite 9
Walnut Creek, CA 94598

TIMOTHY SCHAD, L.S.
10699 ROUND VALLEY RD.
GRASS VALLEY, CA. 95949
PHONE: (530) 271-7477
FAX: (530) 271-7377

PROJECT NO:
DRAWN BY:
CHECKED BY:

REV	DATE	DESCRIPTION
1	2-12-15	SIG. BLOCK

PROFESSIONAL LAND SURVEYOR
TIMOTHY F. SCHAD
LS 6021
Exp. 3/31/15
STATE OF CALIFORNIA

2-12-15

IT IS A VIOLATION OF LAW FOR ANY PERSON, UNLESS THEY ARE ACTING UNDER THE DIRECTION OF A LICENSED PROFESSIONAL ENGINEER, TO ALTER THIS DOCUMENT.

CAMBRIA / SC-4
WEST SIDE WHITEHALL AVE.
CAMBRIA, CA. 93428
SAN LUIS OBISPO COUNTY
ADJACENT TO APN:022-227-016

SHEET TITLE
UTILITY POLE EXHIBIT

SHEET NUMBER
LS-1

NOTES:

1. THE PROPOSED LAYOUT IS PRELIMINARY AND SUBJECT TO CHANGE PENDING FULL STRUCTURAL ANALYSIS.

DISCLAIMER:

THIS SET OF DRAWINGS WAS PREPARED UTILIZING INFORMATION OBTAINED FROM PUBLIC DOCUMENTS MADE AVAILABLE ON THE CITY OF GOLETA WEBSITE. MSQURED ENGINEERS CANNOT GUARANTEE THE ACCURACY OF THE DATA AND INFORMATION DEPICTED ON THE CITY OF GOLETA WEBPAGE AND HEREBY EXPRESSLY DISCLAIMS ANY RESPONSIBILITY FOR THE TRUTH, VALIDITY, INVALIDITY, ACCURACY, INACCURACY OF ANY SAID DATA AND INFORMATION. THE PARCEL LINES ON MAPS ARE FOR ILLUSTRATION PURPOSES ONLY AND ARE NOT INTENDED TO BE USED AS A SURVEY PRODUCT. USER ACCEPTS RESPONSIBILITY FOR THE UNAUTHORIZED USE OR TRANSMISSION OF ANY SUCH DATA OR INFORMATION IN ITS ACTUAL OR ALTERED FORM.

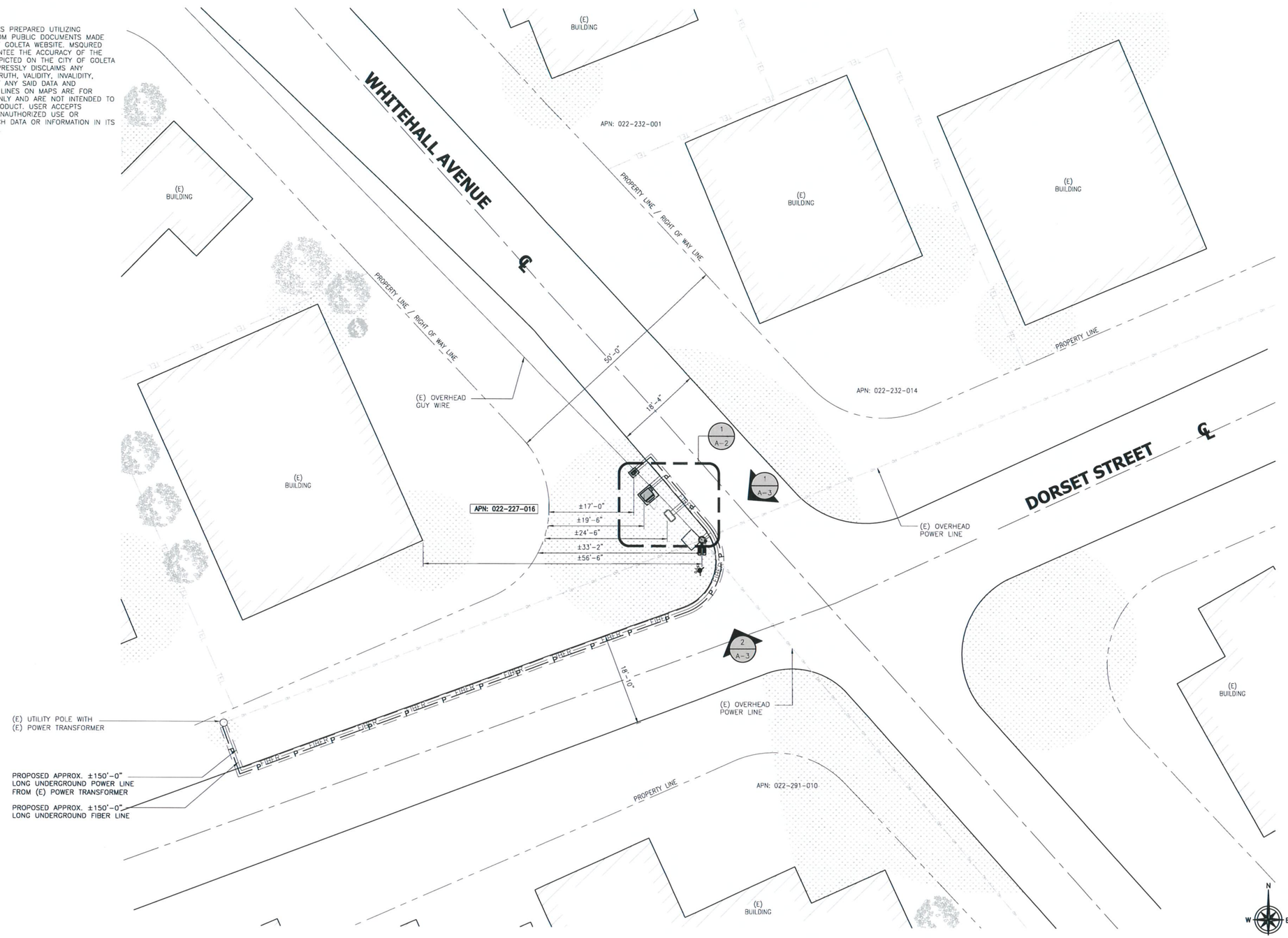

SITE PLAN

24"x36" SCALE: 1" = 10'-0"
11"x17" SCALE: 1" = 20'-0"

1

verizon wireless
2785 MITCHELL DR., BLDG 9,
WALNUT CREEK, CA 94598

SEQUOIA DEPLOYMENT SERVICES, INC.

m.squared ENGINEERS
1387 CALLE AVANZADO
SAN CLEMENTE, CA 92673

LOCATION NO:	291687
DRAWN BY:	MJM
CHECKED BY:	MM

REV	DATE	DESCRIPTION
C	04/06/2015	100% ZD'S FOR REVIEW
B	02/26/2014	95% ZD'S FOR REVIEW
A	12/22/2014	90% ZD'S FOR REVIEW

IT IS A VIOLATION OF LAW FOR ANY PERSON, UNLESS THEY ARE ACTING UNDER THE DIRECTION OF A LICENSED PROFESSIONAL ENGINEER, TO ALTER THIS DOCUMENT.

CAMBRIA SC4

WEST SIDE WHITEHALL AVENUE
CAMBRIA, CA 93428
(SMALL CELL)

SHEET TITLE

SITE PLAN

SHEET NUMBER

A-1

NOTES:

1. VERIFY AND RECORD ALL TIES AND FOOTAGES IN FIELD PER FINAL AS-BUILT CONDITIONS.
2. PROVIDE ADEQUATE WORKMAN PROTECTION ON WINDING NARROW ROADS OR HEAVY TRAFFIC.
3. ALL LANDSCAPING TO BE RESTORED TO ORIGINAL CONDITION.
4. NOTIFY PROPERTY OWNER BEFORE WORKING ON OR AROUND PRIVATE PROPERTY.
5. ELECTRICAL SUPPLY FOR CABINET: 100 AMP SERVICE NEEDED.

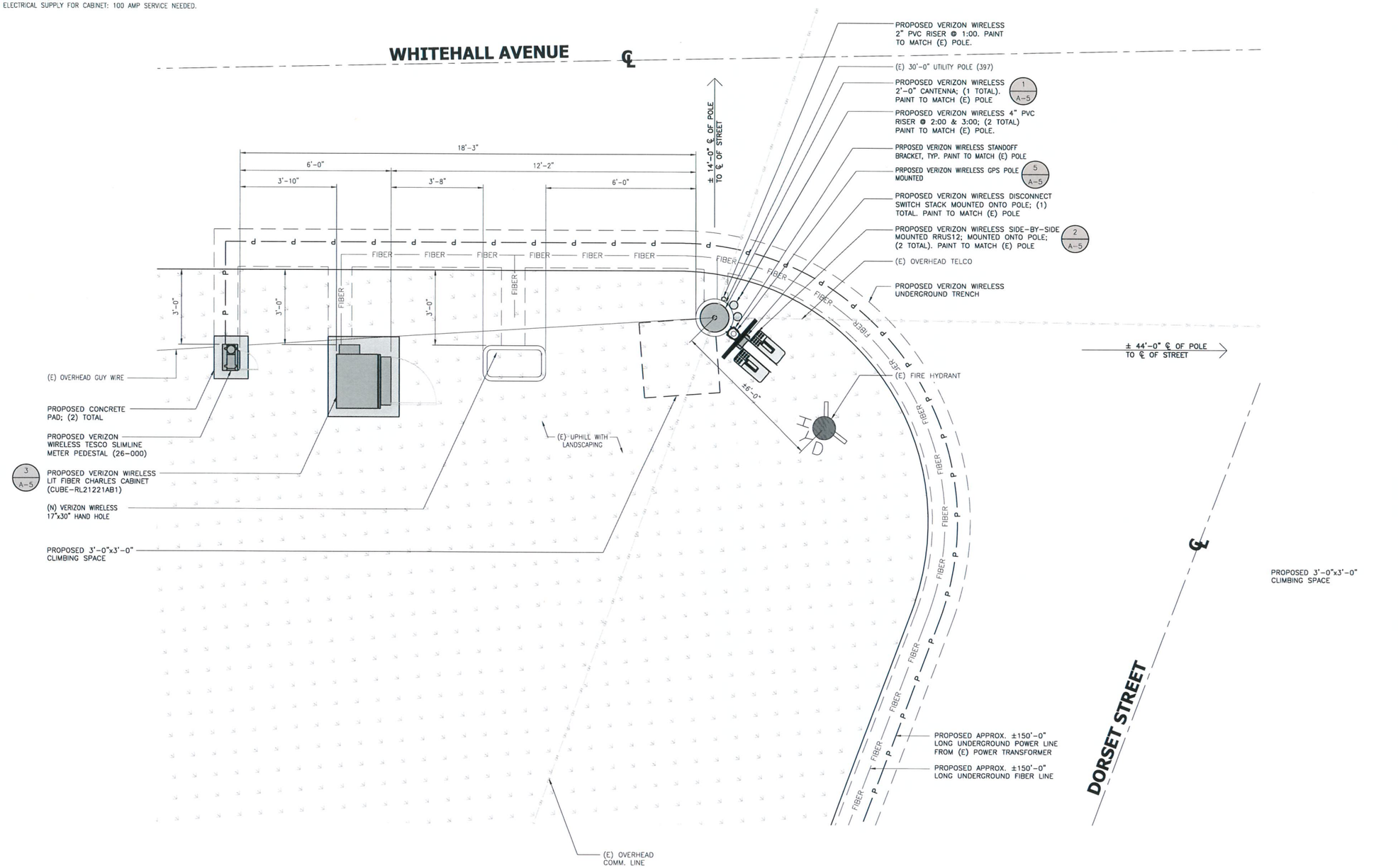

ANTENNA AND EQUIPMENT LAYOUT

24"x36" SCALE: 1/2" = 1'-0"
11"x17" SCALE: 1/4" = 1'-0"

1

verizon wireless
2785 MITCHELL DR., BLDG 9,
WALNUT CREEK, CA 94598

SEQUOIA DEPLOYMENT SERVICES, INC.

m.squared ENGINEERS
1387 CALLE AVANZADO
SAN CLEMENTE, CA 92673

LOCATION NO:	291687
DRAWN BY:	MJM
CHECKED BY:	MM

REV	DATE	DESCRIPTION
C	04/06/2015	100% ZD'S FOR REVIEW
B	02/26/2014	95% ZD'S FOR REVIEW
A	12/22/2014	90% ZD'S FOR REVIEW

IT IS A VIOLATION OF LAW FOR ANY PERSON, UNLESS THEY ARE ACTING UNDER THE DIRECTION OF A LICENSED PROFESSIONAL ENGINEER, TO ALTER THIS DOCUMENT.

CAMBRIA SC4

WEST SIDE WHITEHALL AVENUE
CAMBRIA, CA 93428
(SMALL CELL)

SHEET TITLE
ANTENNA AND EQUIPMENT LAYOUT

SHEET NUMBER
A-2

NOTES:

1. VERIFY AND RECORD ALL TIES AND FOOTAGES IN FIELD PER FINAL AS-BUILT CONDITIONS.
2. PROVIDE ADEQUATE WORKMAN PROTECTION ON WINDING NARROW ROADS OR HEAVY TRAFFIC.
3. ALL LANDSCAPING TO BE RESTORED TO ORIGINAL CONDITION.
4. NOTIFY PROPERTY OWNER BEFORE WORKING ON OR AROUND PRIVATE PROPERTY.
5. ELECTRICAL SUPPLY FOR CABINET: 100 AMP SERVICE NEEDED.

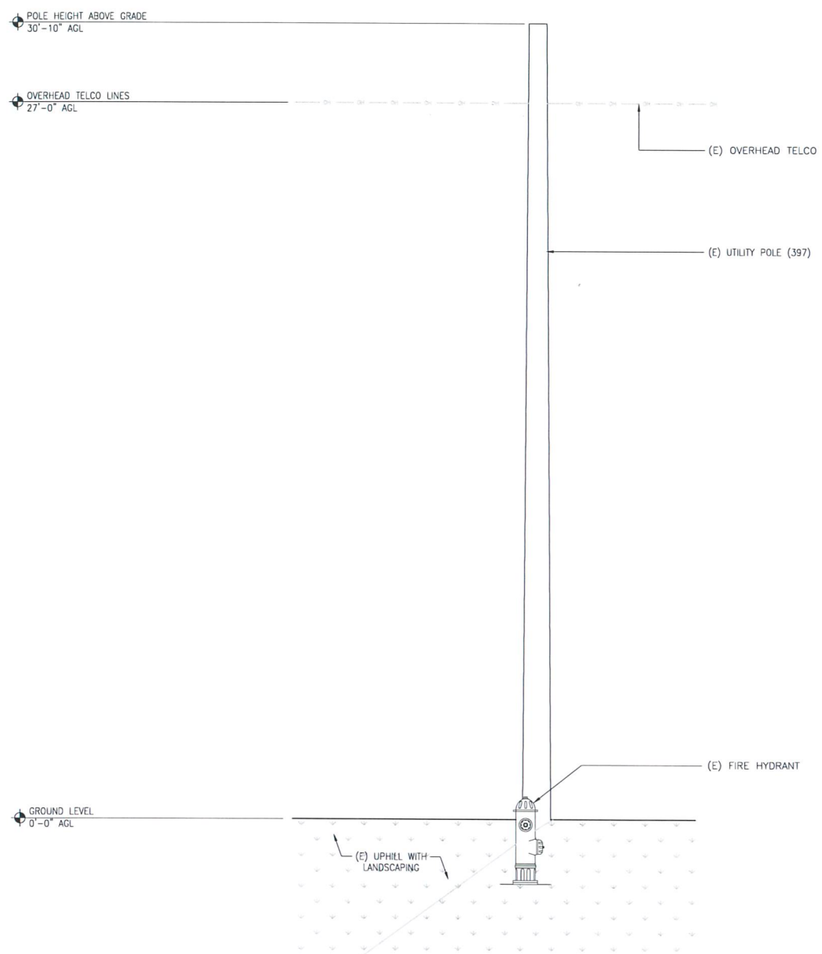

EXISTING NORTHEAST ELEVATION

24"x36" SCALE: 1/2" = 1'-0"
11"x17" SCALE: 1/4" = 1'-0"

2' 1' 0" 2'

2

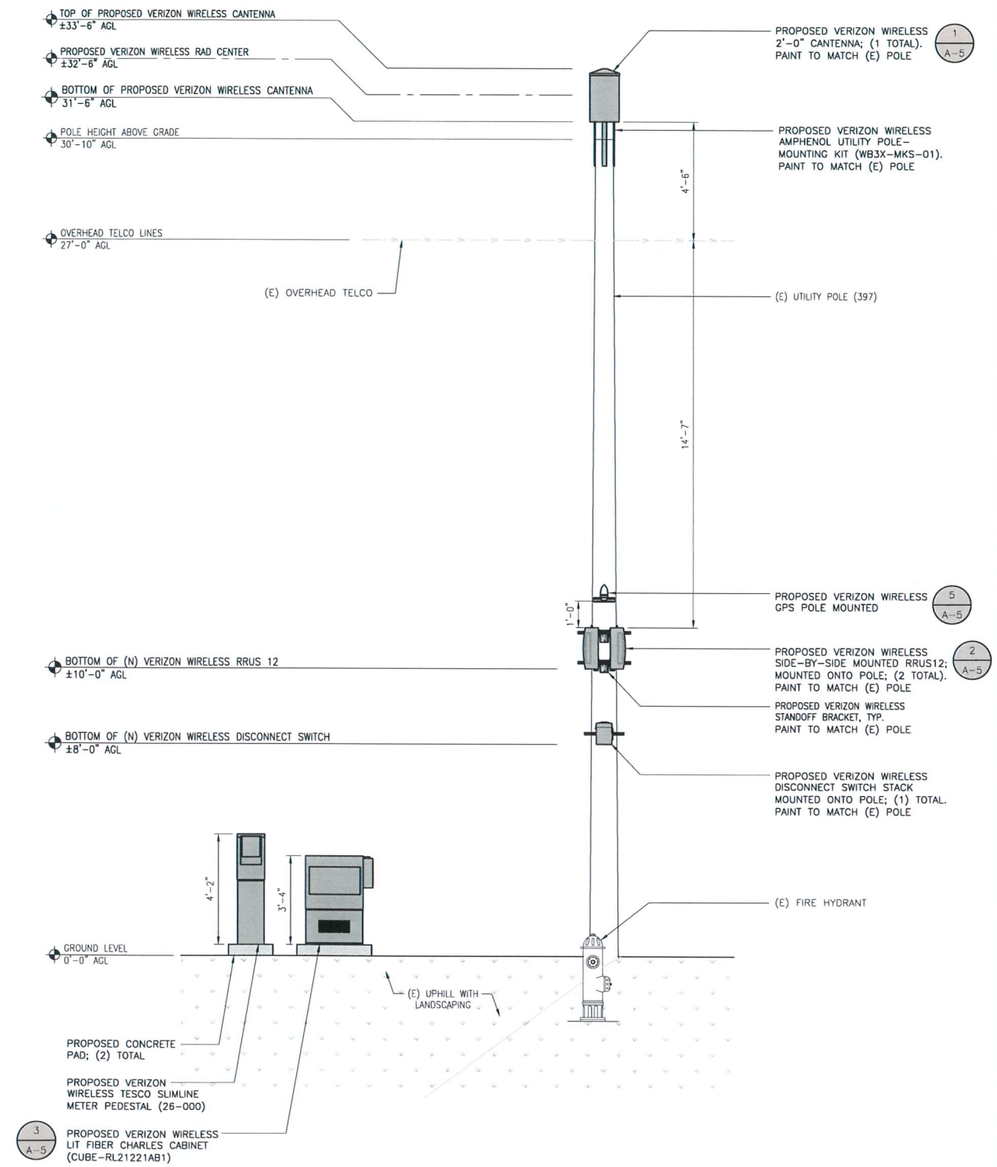

PROPOSED NORTHEAST ELEVATION

24"x36" SCALE: 1/2" = 1'-0"
11"x17" SCALE: 1/4" = 1'-0"

2' 1' 0" 2'

1

verizon wireless
2785 MITCHELL DR., BLDG 9,
WALNUT CREEK, CA 94598

SEQUOIA DEPLOYMENT SERVICES, INC.

m.squared ENGINEERS
1387 CALLE AVANZADO
SAN CLEMENTE, CA 92673

LOCATION NO:	291687
DRAWN BY:	MJM
CHECKED BY:	MM

REV	DATE	DESCRIPTION
C	04/06/2015	100% ZD'S FOR REVIEW
B	02/26/2014	95% ZD'S FOR REVIEW
A	12/22/2014	90% ZD'S FOR REVIEW

IT IS A VIOLATION OF LAW FOR ANY PERSON, UNLESS THEY ARE ACTING UNDER THE DIRECTION OF A LICENSED PROFESSIONAL ENGINEER, TO ALTER THIS DOCUMENT.

CAMBRIA SC4

WEST SIDE WHITEHALL AVENUE
CAMBRIA, CA 93428
(SMALL CELL)

SHEET TITLE

ELEVATIONS

SHEET NUMBER

A-3

NOTES:

1. VERIFY AND RECORD ALL TIES AND FOOTAGES IN FIELD PER FINAL AS-BUILT CONDITIONS.
2. PROVIDE ADEQUATE WORKMAN PROTECTION ON WINDING NARROW ROADS OR HEAVY TRAFFIC.
3. ALL LANDSCAPING TO BE RESTORED TO ORIGINAL CONDITION.
4. NOTIFY PROPERTY OWNER BEFORE WORKING ON OR AROUND PRIVATE PROPERTY.
5. ELECTRICAL SUPPLY FOR CABINET: 100 AMP SERVICE NEEDED.

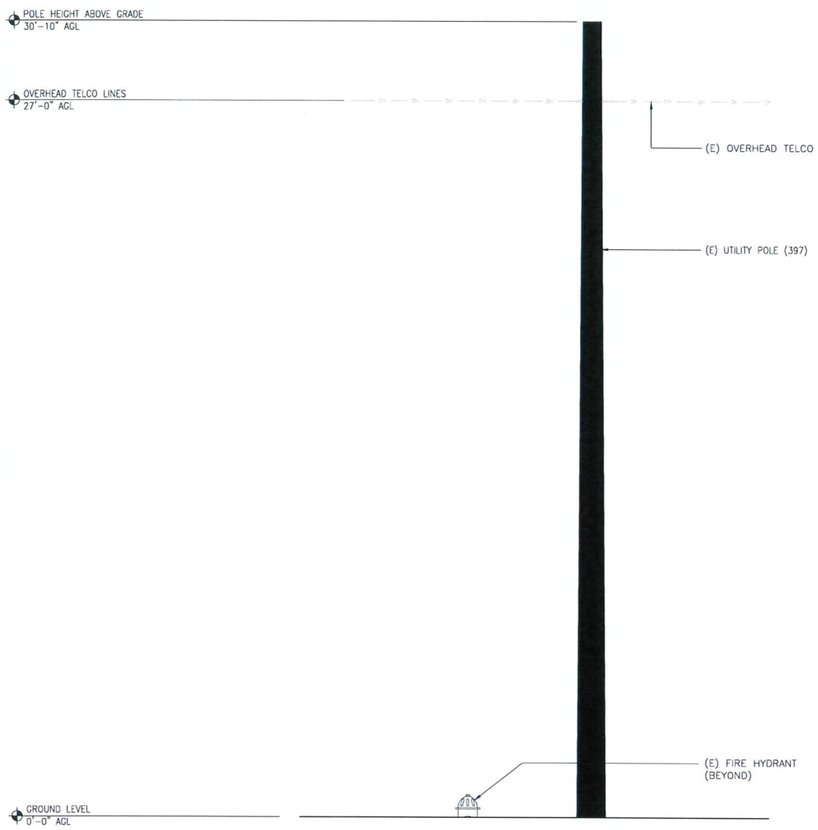

EXISTING SOUTHEAST ELEVATION

24"x36" SCALE: 1/2" = 1'-0"
11"x17" SCALE: 1/4" = 1'-0"

2' 1' 0" 2'

2

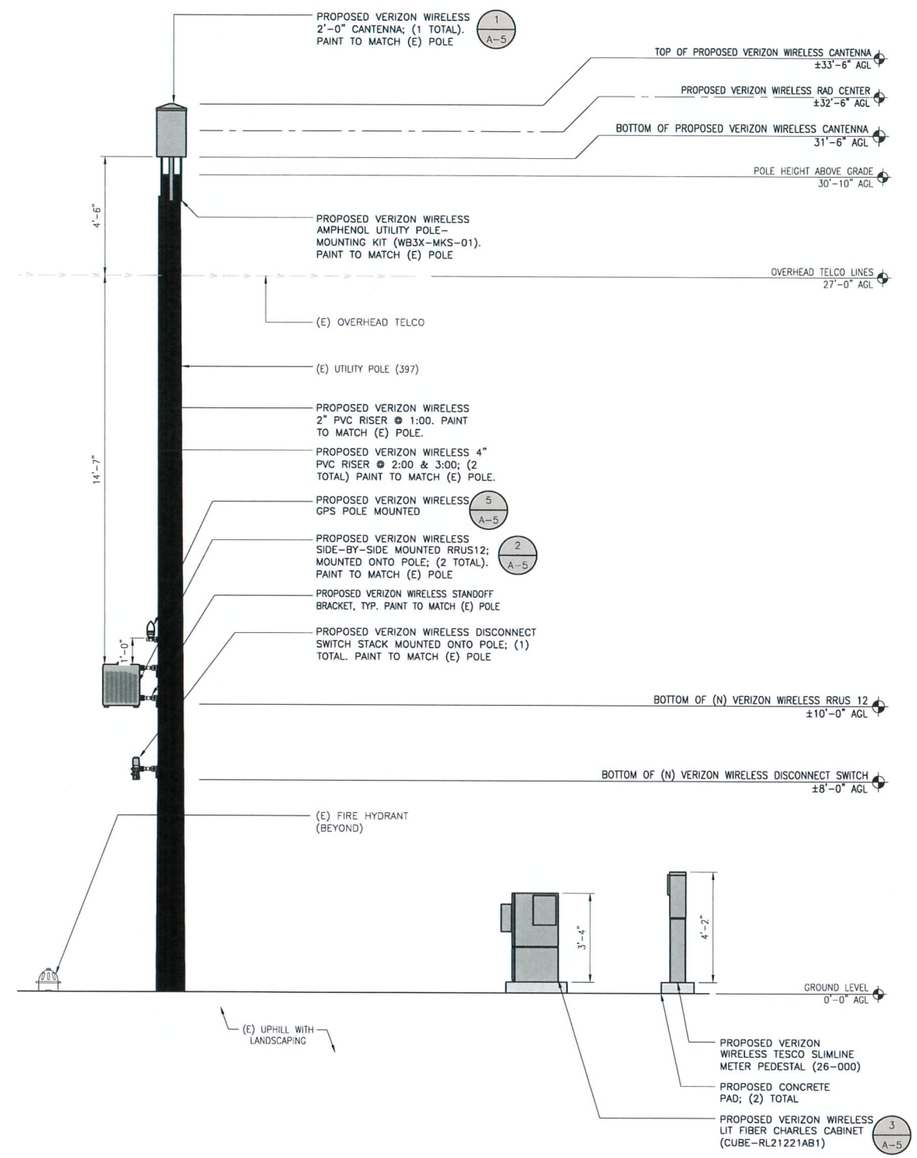

PROPOSED SOUTHEAST ELEVATION

24"x36" SCALE: 1/2" = 1'-0"
11"x17" SCALE: 1/4" = 1'-0"

2' 1' 0" 2'

1

verizon wireless
2785 MITCHELL DR., BLDG 9,
WALNUT CREEK, CA 94598

SEQUOIA
DEPLOYMENT SERVICES, INC.

m.squared
ENGINEERS
1387 CALLE AVANZADO
SAN CLEMENTE, CA 92673

LOCATION NO:	291687
DRAWN BY:	MJM
CHECKED BY:	MM

REV	DATE	DESCRIPTION
C	04/06/2015	100% ZD'S FOR REVIEW
B	02/26/2014	95% ZD'S FOR REVIEW
A	12/22/2014	90% ZD'S FOR REVIEW

IT IS A VIOLATION OF LAW FOR ANY PERSON, UNLESS THEY ARE ACTING UNDER THE DIRECTION OF A LICENSED PROFESSIONAL ENGINEER, TO ALTER THIS DOCUMENT.

CAMBRIA SC4

WEST SIDE WHITEHALL AVENUE
CAMBRIA, CA 93428
(SMALL CELL)

SHEET TITLE

ELEVATIONS

SHEET NUMBER

A-4

NOT USED | 8

NOT USED | 7

NOT USED | 6

GPS-TMG-26N

GPS-TMG-MRNMNT GPS-TMG-LMNT

Antenna Element Electrical Specifications

Frequency Band	Antenna Gain	Nominal Impedance	VSWR	Polarization	Connector
1575.42 +/- 10 MHz	3.5 dBic	50 ohms	≤1.5:1	Right hand circular	N, female (one - bottom fed)

Mechanical Specifications

Antenna Dimensions	Shipping Dimensions	Antenna Weight	Shipping Weight	Radome Color
5.0" H x 3.2" D (126 H x 81 mm)	7.5" L x 4.4" W x 3.8" D (190 L x 112 x 96 mm)	0.6 lbs (0.3 kg)	1.9 lbs (0.9 kg)	White

Environmental Specifications

Temperature Range	Humidity
- 40°C to + 85°C	95%

Mounting

All mounting options fit pipes of 1"-1.45" (25 mm-37 mm) maximum diameter.

Model	Options
GPS-TMG-26N	Does not include mounting hardware.
GPS-TMG-26NMS	Includes universal mounting hardware consisting of collar (GPS-TMG-MNT) and pipe clamp (GPS-TMG-LMNT).
GPS-TMG-26NCS	Includes economy collar mount (GPS-TMG-MRNMNT).

GPS ANTENNA | 5

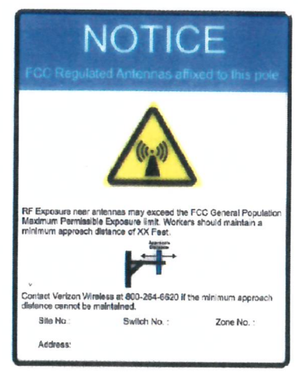

FCC SIGN

NOTE:
NEW VINYL SIGN TO BE PROVIDED BY VERIZON WIRELESS AND BE PLACED ON THE POLE 9' ABOVE GROUND LEVEL. COLOR TO BE DETERMINED PRIOR TO INSTALL.

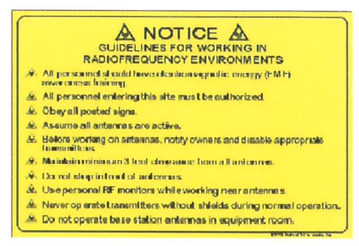

NOTICE SIGNAGE

NOTE:
NEW VINYL SIGN TO BE PROVIDED BY VERIZON WIRELESS AND ATTACHED 3' BELOW ANTENNAS. SIGN TO BE YELLOW.

RF SIGNAGE | 4

MFR:	CHARLES INNOVATIVE ENCLOSED SOLUTIONS
MODEL:	CUBE-RL21221AB1
DIMENSION:	39"H x 26"W x 20"D
MOUNT:	WALL/POLE/PAD

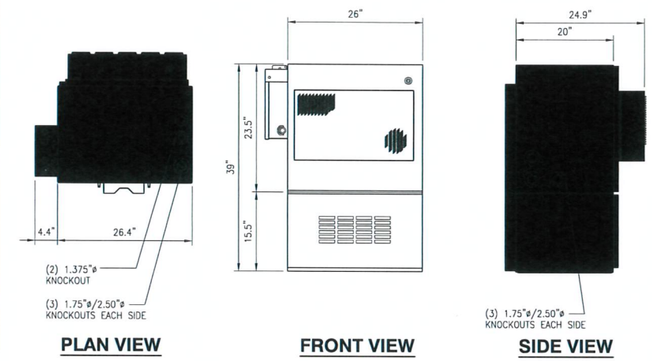

PLAN VIEW FRONT VIEW SIDE VIEW

CHARLES (CUBE) | 3

24"x36" SCALE: NTS
11"x17" SCALE: NTS

ERICSSON RRH REMOTE RADIO UNIT

COLOR: GRAY
DIMENSIONS: 20.4" TALL X 18.5" WIDE X 7.5" DEEP (INCLUDING SUNSHIELD)
WEIGHT: +/- 58 LBS. (INCLUDING MOUNTING HARDWARE)

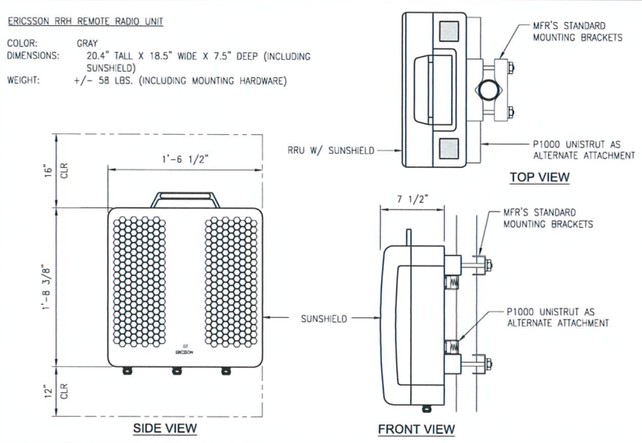

TOP VIEW SIDE VIEW FRONT VIEW

ERICSSION RRUS 12 | 2

24"x36" SCALE: NTS
11"x17" SCALE: NTS

MFR:	AMPHENOL ANTENNA SOLUTIONS
MODEL:	CWT360X06FXY-0
MHz:	696-960/1710-2170 MHZ

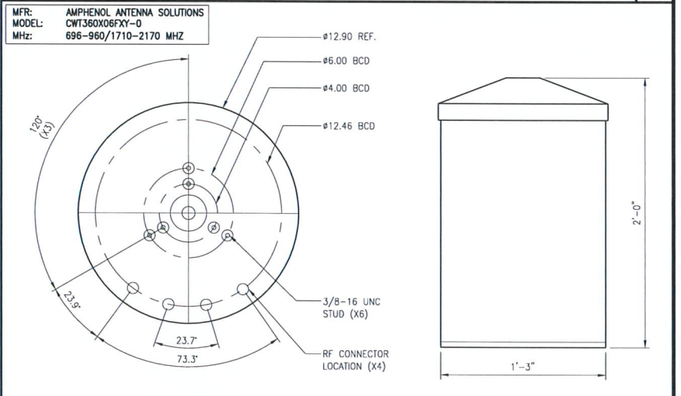

BOTTOM VIEW FRONT VIEW

CANTENNA DETAIL | 1

24"x36" SCALE: NTS
11"x17" SCALE: NTS

verizon wireless
2785 MITCHELL DR., BLDG 9,
WALLNUT CREEK, CA 94598

SEQUOIA DEPLOYMENT SERVICES, INC.

m.squared ENGINEERS
1387 CALLE AVANZADO
SAN CLEMENTE, CA 92673

LOCATION NO:	291687
DRAWN BY:	MJM
CHECKED BY:	MM

REV	DATE	DESCRIPTION
C	04/06/2015	100% ZD'S FOR REVIEW
B	02/26/2014	95% ZD'S FOR REVIEW
A	12/22/2014	90% ZD'S FOR REVIEW

IT IS A VIOLATION OF LAW FOR ANY PERSON, UNLESS THEY ARE ACTING UNDER THE DIRECTION OF A LICENSED PROFESSIONAL ENGINEER, TO ALTER THIS DOCUMENT.

CAMBRIA SC4

WEST SIDE WHITEHALL AVENUE
CAMBRIA, CA 93428
(SMALL CELL)

SHEET TITLE
EQUIPMENT DETAILS

SHEET NUMBER
A-5

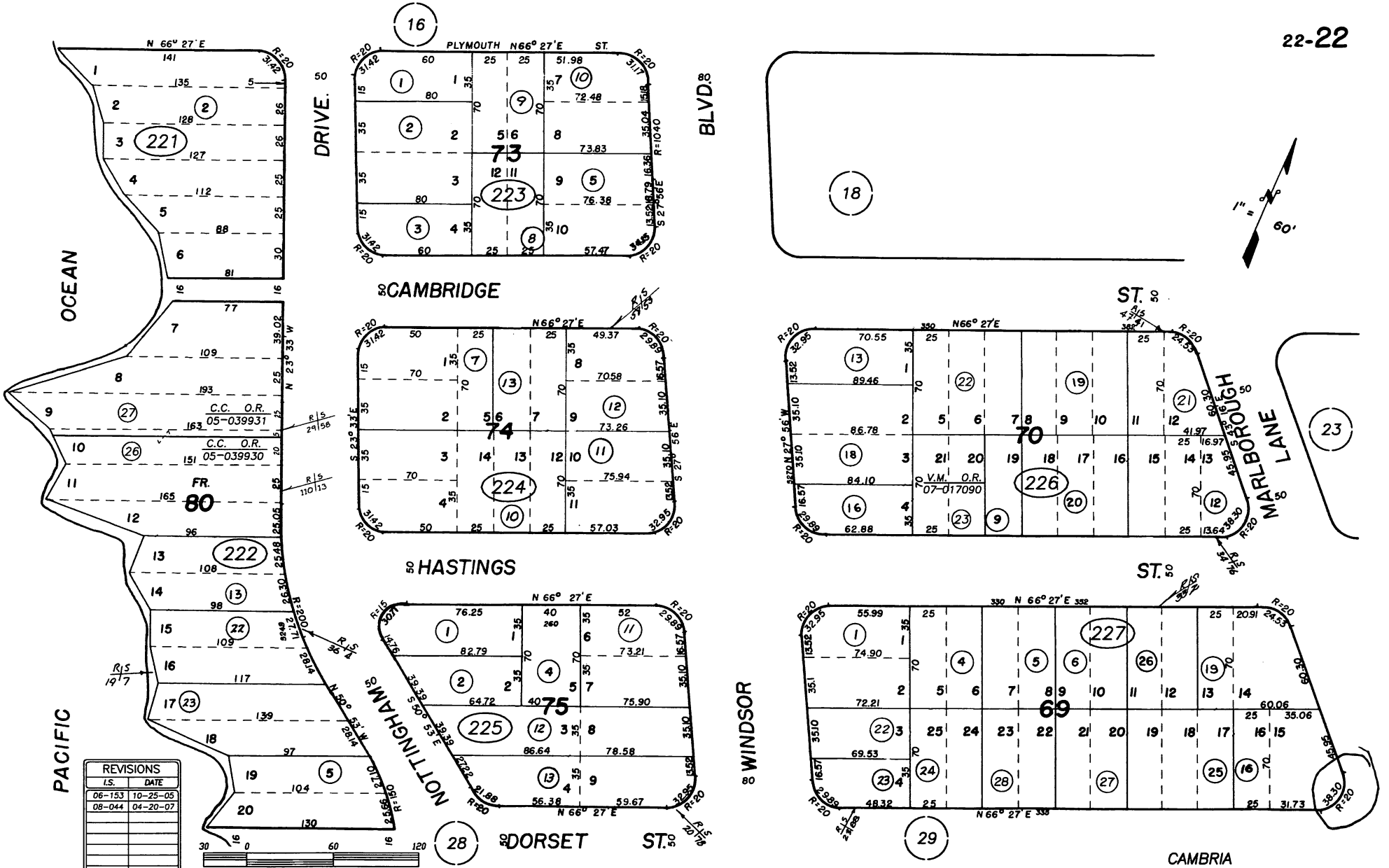

CAMBRIA PINES UNIT NO. 5, R.M. Bk. 5 , Pg. 2

CAMBRIA
ASSESSOR'S MAP, COUNTY OF SAN LUIS OBISPO, CA.
BOOK 022 PAGE 22

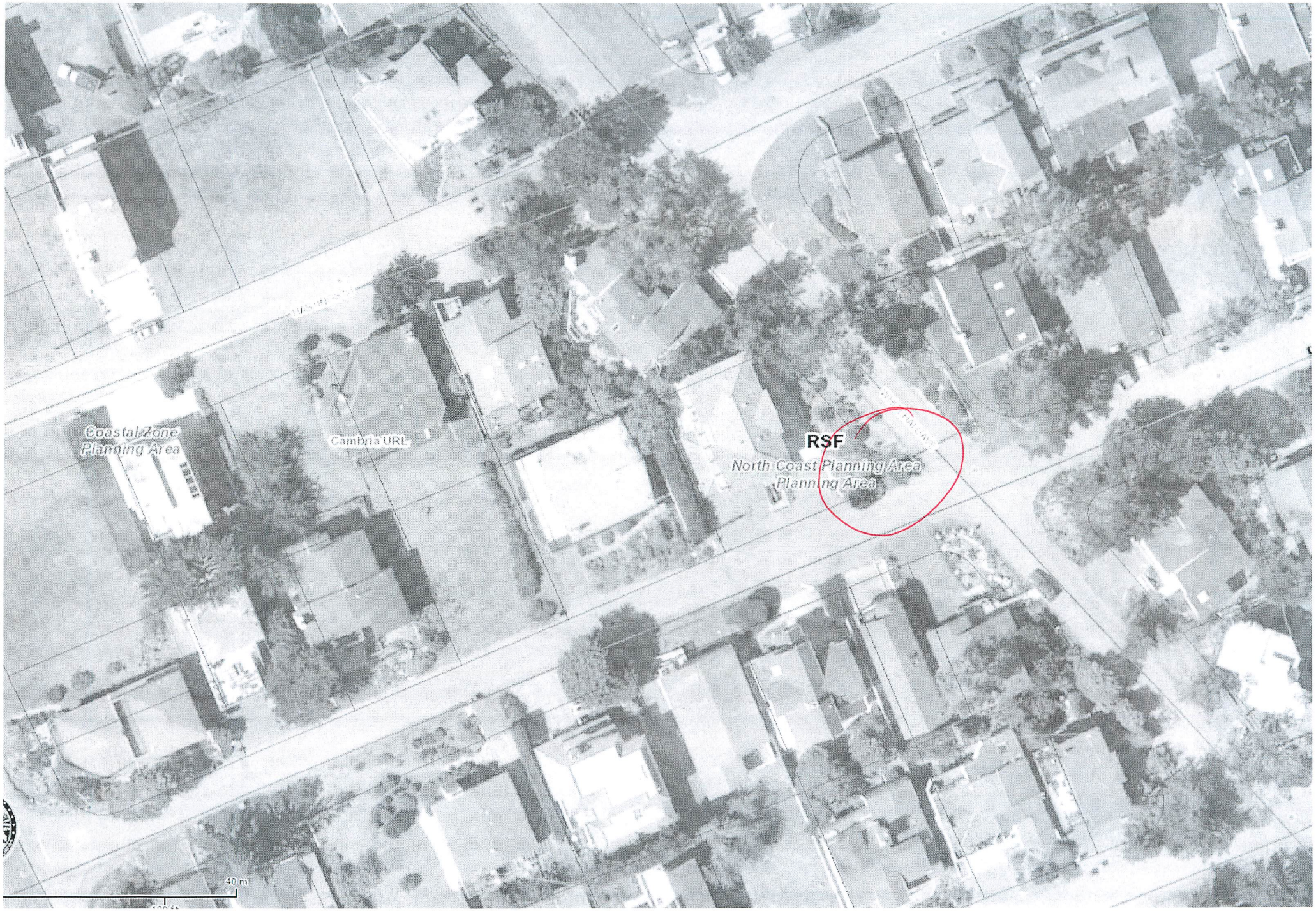
Coastal Zone
Planning Area
Cambria URL
RSF
North Coast Planning Area
Planning Area
40 m