SAN LUIS OBISPO COUNTY

DEPARTMENT OF PLANNING AND BUILDING

THIS IS A NEW PROJECT REFERRAL

DATE: 5/28/2013

TO: _____

FROM: Xzandrea Fowler, North County Team/ Development Review

PROJECT DESCRIPTION: DRC2012-00105 TAYLOR/ AT&T- Minor Use Permit for an 89' monopine, antennas, and other cell site equipment. Site located off Interlake Road in Bradley. APN: 080-033-005.

Return this letter with your comments attached no later than: 14 days from receipt of this referral. CACs please respond within 60 days. Thank you.

PART 1 - IS THE ATTACHED INFORMATION ADEQUATE TO COMPLETE YOUR REVIEW?

- ☐ YES (Please go on to PART II.)
- ☐ NO (Call me ASAP to discuss what else you need. We have only 10 days in which we must obtain comments from outside agencies.)

PART II - ARE THERE SIGNIFICANT CONCERNS, PROBLEMS OR IMPACTS IN YOUR AREA OF REVIEW?

- ☐ YES (Please describe impacts, along with recommended mitigation measures to reduce the impacts to less-than-significant levels, and attach to this letter)
- ☐ NO (Please go on to PART III)

PART III - INDICATE YOUR RECOMMENDATION FOR FINAL ACTION.

Please attach any conditions of approval you recommend to be incorporated into the project's approval, or state reasons for recommending denial.

IF YOU HAVE "NO COMMENT," PLEASE SO INDICATE, OR CALL.

_____

_____

_____

_____	_____	_____
Date	Name	Phone

COUNTY GOVERNMENT CENTER • SAN LUIS OBISPO • CALIFORNIA 93408 • (805)781-5600

EMAIL: planning @co.slo.ca.us • FAX: (805) 781-1242• WEBSITE: http://www.sloplanning.org

1. General APPLICATION form

San Luis Obispo County Department of Planning and Building File No _____

DRC2012-00105 TAYLOR GEORGE

MINOR USE PERMIT

89' MONOPINE, 2 NEW OMNI ANTENNAS, 12 NEW PANEL ANTENNAS, 24 RRU'S, 2 SURGE AMS

NACI/ RNACI

RL

.Y
ermit
an

☐ Plot Plan
☒ Minor Use Permit
☐ Variance
Curb, Gutter & Sidewalk Waiver
Modification to approved land use permit

APPLICANT INFORMATION *Check box for contact person assigned to this project*

☐ Landowner Name George Taylor II Daytime Phone _____
Mailing Address 801 E Ocean Ave. Zip _____
Email Address: _____

☒ Applicant Name Tricia Knight Daytime Phone (805) 448-4221
Mailing Address 123 Seacliff Dr. Pismo Beach Zip 93449
Email Address: ~~triclaknight@charter.net~~

☐ Agent Name (as above) Daytime Phone _____
Mailing Address _____ Zip _____
Email Address: _____

PROPERTY INFORMATION

Total Size of Site: 240 acres Assessor Parcel Number(s): 080-033-005
Legal Description: T25S R10E PTN SEC 6.
Address of the project (if known): 4363 Interlake Rd. Bradley CA 93426
Directions to the site - describe first with name of road providing primary access to the site, then nearest roads, landmarks, etc.: Interlake Rd at Eagle Creek Ln

Describe current uses, existing structures, and other improvements and vegetation on the property:

PROPOSED PROJECT

Describe the proposed project (inc. sq. ft. of all buildings): 89' Monopine, 2 new omni antennas, 12 new panel antennas, 24 RRU's, 2 surge suppressors, 1 1900 radio kit, 1 850 radio kit, 1 equipment rack, and 1 new GPS antenna.

LEGAL DECLARATION

I, the owner of record of this property have completed this form accurately and declare that all statement here are true. I do hereby grant official representatives of the county authorization to inspect the subject property.

Property owner signature_____ Date_____

FOR STAFF USE ONLY

Reason for Land Use Permit: _____

2. LAND USE PERMIT APPLICATION

San Luis Obispo County Department of Planning and Building File No _____

Type of project: ■ Commercial ☐ Industrial ☐ Residential ☐ Recreational ☐ Other

Describe any modifications/adjustments from ordinance needed and the reason for the request (if applicable): none

Describe existing and future access to the proposed project site: existing access from Interlake Rd.

Surrounding parcel ownership: Do you own adjacent property? ☐ Yes ■ No
If yes, what is the acreage of all property you own that surrounds the project site?: _____

Surrounding land use: What are the uses of the land surrounding your property (when applicable, please specify all agricultural uses):
North: Open Space South: Open Space
East: Open Space West: Open Space

For all projects answer the following:
Square footage and percentage of the total site (approximately) that will be used for the following:
Buildings: _____ sq. feet _____ % Landscaping: _____ sq. feet _____ %
Paving: _____ sq. feet _____ % Other (specify) _____
Total area of all paving and structures: n/a ☐ sq. feet ☐ acres
Total area of grading or removal of ground cover: n/a ☐ sq. feet ☐ acres
Number of parking spaces proposed: n/a Height of tallest structure: 99'
Number of trees to be removed: 0 Type: _____
Setbacks: Front_____ Right_____ Left_____ Back_____

N/A **Proposed water source:** ☐ On-site well ☐ Shared well ☐ Other _____
☐ Community System - List the agency or company responsible for provision: _____
Do you have a valid will-serve letter? ☐ Yes If yes, please submit copy ☐ No

N/A **Proposed sewage disposal:** ☐ Individual on-site system ☐ Other _____
☐ Community System -List the agency or company responsible for sewage disposal: _____
Do you have a valid will-serve letter? ☐ Yes If yes, please submit copy ☐ No

N/A **Fire Agency**: - List the agency responsible for fire protection: _____

For commercial/industrial projects answer the following:
Total outdoor use area: _____ ☐ sq. feet ■ acres
Total floor area of all structures including upper stories: _____ sq. feet

N/A **For residential projects, answer the following:**
Number of residential units: _____ Number of bedrooms per unit: _____
Total floor area of all structures including upper stories, but not garages and carports: _____
Total of area of the lot(s) minus building footprint and parking spaces: _____

3. ENVIRONMENTAL DESCRIPTION FORM

San Luis Obispo County Department of Planning and Building File No _____

The California Environmental Quality Act (CEQA) requires all state and local agencies to consider and mitigate environmental impacts for their own actions and when permitting private projects. The Act also requires that an environmental impact report (EIR) be prepared for all actions that may significantly affect the quality of the environment. The information you provide on this form will help the Department of Planning and Building determine whether or not your project will significantly affect the quality of the environment.

To ensure that your environmental review is completed as quickly as possible, please remember to:

Answer **ALL** of the questions as accurately and completely as possible.

Include any additional information or explanations where you believe it would be helpful or where required. Include additional pages if needed.

If you are requesting a land division or a re-zoning, be sure to include complete information about future development that may result from the proposed land division or rezoning.

Include references to any reports or studies you are aware of that might be relevant to the questions asked or the answers you provide.

Should a determination be made that the information is inaccurate or insufficient, you will be required to submit additional information upon request.

Physical Site Characteristic Information

Your site plan will also need to show the information requested here

1. Describe the topography of the site:

   Level to gently rolling, 0-10% slopes: _____acres

   Moderate slopes of 10-30%: _____acres

   Steep slopes over 30%: _____acres

2. Are there any springs, streams, lakes or marshes on or near the site? ☐ Yes ☐ No

   If yes, please describe:_____

3. Are there any flooding problems on the site or in the surrounding area ☐ Yes ☐ No

   If yes, please describe:_____

4. Has a drainage plan been prepared? ☐ Yes ☐ No

   If yes, please include with application.

5. Has there been any grading or earthwork on the project site? ☐ Yes ☐ No

   If yes, please explain:_____

6. Has a grading plan been prepared? ☐ Yes ☐ No

   If yes, please include with application.

7. Are there any sewer ponds/waste disposal sites on/adjacent to the project? ☐ Yes ☐ No

8. Is a railroad or highway within 300 feet of your project site? ☐ Yes ☐ No

9. Can the proposed project be seen from surrounding public roads? ☐ Yes ☐ No

   If yes, please list:_____

N/A

Water Supply Information

1. What type of water supply is proposed?
   ☐ Individual well ☐ Shared well ☐ Community water system
2. What is the proposed use of the water?
   ☐ Residential ☐ Agricultural: explain _____
   ☐ Commercial/Office: explain _____
   ☐ Industrial: explain _____
3. What is the expected daily water demand associated with the project? _____
4. How many service connections will be required? _____
5. Do operable water facilities exist on the site?
   ☐ Yes ☐ No If yes, please describe: _____
6. Has there been a sustained yield test on proposed or existing wells?
   ☐ Yes ☐ No If yes please attach
7. Does water meet the Health Agency's quality requirements?
   Bacteriological? ☐ Yes ☐ No Chemical? ☐ Yes ☐ No
   Physical? ☐ Yes ☐ No Water analysis report submitted? ☐ Yes ☐ No
8. Please check if any of the following have been completed on the subject property and/or submitted to County Environmental Health.
   ☐ Well Driller's Letter ☐ Water Quality Analysis ☐ OK or ☐ Problems
   ☐ Will Serve Letter ☐ Pump Test _____ Hours _____ GPM
   ☐ Surrounding Well Logs ☐ Hydrologic Study ☐ Other _____

Please attach any letters or documents to verify that water is available for the proposed project.

N/A

Sewage Disposal Information

If an on-site (individual) subsurface sewage disposal system will be used:

1. Has an engineered percolation test been accomplished?
   ☐ Yes ☐ No If yes, please attach a copy.
2. What is the distance from proposed leach filed to any neighboring water wells? _____ feet
3. Will subsurface drainage result in the possibility or effluent reappearing in surface water or on adjacent lands, due to steep slopes, impervious soil layers or other existing conditions?
   ☐ Yes ☐ No
4. Has a piezometer test been completed? ☐ Yes ☐ No
5. Will a Waste Discharge Permit from the Regional Water Quality Control Board be required?
   ☐ Yes ☐ No
   (a waste discharge permit is typically needed when you exceed 2,500 gallons per day)

N/A

If a community sewage disposal system is to be used:

1. Is this project to be connected to an existing sewer line?
   ☐ Yes ☐ No Distance to nearest sewer line: _____
   Location of connection: _____
2. What is the amount of proposed flow? _____ g.p.d.
3. Does the existing collection treatment and disposal system have adequate additional capacity to accept the proposed flow? ☐ Yes ☐ No

N/A

Solid Waste Information

1. What type of solid waste will be generated by the project? ☐ Domestic ☐ Industrial ☐ Agricultural ☐ Other, please explain? _____
2. Name of Solid Waste Disposal Company: _____
3. Where is the waste disposal storage in relation to buildings? _____
4. Does your project design include an area for collecting recyclable materials and/or composting materials? ☐ Yes ☐ No

N/A

Community Service Information

1. Name of School District: _____
2. Location of nearest police station: _____
3. Location of nearest fire station: _____
4. Location of nearest public transit stop: _____
5. Are services (grocery / other shopping) within walking distance of the project? ☐ Yes ☐ No
   If yes, what is the distance? _____ feet / miles

Historic and Archeological Information

1. Please describe the historic use of the property: Agriculture
2. Are you aware of the presence of any historic, cultural or archaeological materials on the project site or in the vicinity? ☐ Yes ■ No
   If yes, please describe: _____
3. Has an archaeological surface survey been done for the project site? ☐ Yes ■ No
   If yes, please include **two** copies of the report with the application.

Commercial/Industrial Project Information

Only complete this section if you are proposing a commercial or industrial project or zoning change.

1. Days of Operation: 7 Hours of Operation: 24
2. How many people will this project employ? one / once a month
3. Will employees work in shifts? ☐ Yes ■ No
   If yes, please identify the shift times and number of employees for each shift _____
4. Will this project produce any emissions (i.e. gasses, smoke, dust, odors, fumes, vapors,)?
   ☐ Yes ■ No
   If yes, please explain: _____
5. Will this project increase the noise level in the immediate vicinity? ☐ Yes ■ No
   If yes, please explain: _____
   (If loud equipment is proposed, please submit manufacturers estimate on noise output)
6. What type of industrial waste materials will result from the project? Explain in detail:

7. Will hazardous products be used or stored on-site? ☐ Yes ☒ No
If yes, please describe in detail: _____

8. Has a traffic study been prepared? ☐ Yes ☒ No If yes, please attach a copy
9. Please estimate the number of employees, customer and other project-related traffic trips to or from the project.
Between 7:00 - 9:00 a.m. _____ Between 4:00 to 6:00 p.m. _____
10. Are you proposing any special measures (carpooling, public transit, telecommuting) to reduce automobile trips by employees?
☐ Yes ☒ No If yes, please specify what you are proposing _____

11. Are you aware of any potentially problematic roadway conditions that may exist or result from the proposed project, such as poor sight distance at access points, connecting with the public road? ☐ Yes ☒ No
If yes, please describe _____

Agricultural Information

Only complete this section: 1) within the Agricultural land use category or 2) your site is currently in agricultural production.

1, Is the site currently in Agricultural Preserve (Williamson Act)? ☐ Yes ☒ No
2. If yes, is the site currently under land conservation contract? ☐ Yes ☐ No
3. If your land is currently vacant or in agricultural production, are there any restrictions on the crop productivity of the land? That is, are there any reasons (i.e. poor soil, steep slopes) the land cannot support a profitable agricultural crop? Please explain in detail: _____

Special Project Information

1. Describe any amenities included in the project, such as park areas, open spaces, common recreation facilities, etc.(these also need to be shown on your site plan): none
2. Will the development occur in phases? ☐ Yes ☒ No
If yes describe: _____
3. Do you have any plans for future additions, expansion or further activity related to or connected with this proposal? ☐ Yes ☒ No
If yes, explain: _____
4. Are there any proposed or existing deed restrictions? ☐ Yes ☒ No
If yes, please describe: _____

Energy Conservation Information

1. Describe any special energy conservation measures or building materials that will be incorporated into your project✱: none

✱ The county's Building Energy Efficient Structures (BEES) program can reduce your construction permit fees. Your building must exceed the California State Energy Standards (Title 24) in order to qualify for this program. If you are interested in more information, please contact the Building Services Division of the Department of Planning and Building at (805) 781-5600.

Environmental Information

1. List any mitigation measures that you propose to lessen the impacts associated with your project: none proposed

2. Are you aware of any unique, rare or endangered species (vegetation or wildlife) associated with the project site? ☐ Yes ■ No
   If yes, please list:

3. Are you aware of any previous environmental determinations for all or portions of this property? ☐ Yes ■ No
   If yes, please describe and provide "ED" number(s):

Other Related Permits

1. List all permits, licenses or government approvals that will be required for your project (federal, state and local): building permit

(If you are unsure if additional permits are required from other agencies, please ask a member of department staff currently assigned in either current planning or the environmental division)

6. SUMMARY SHEET - RF EXPOSURE

San Luis Obispo County Department of Planning and Building File No _____

SUMMARY SHEET FOR RF EXPOSURE

This sheet should accompany the report required by Sections 22.30.180 and 23.08.284a(2)

Land Owner: George Taylor

Applicant: Tricia Knight

APN: 080-033-005

1. Is this the only transmitting facility proposed or permitted on this property?

   ☐ Yes ■ No (please answer questions 7 - 9)

2. Structure type ☐ Freestanding ☐ Building/Roof mounted ☐ Other
3. Will the lowest point of the antenna be at least 10 meters above the ground? ☐ Yes ☐ No
4. Please indicate height above ground of lowest point of the antenna 71'
5. Indicate the estimated exposure from this facility _____
6. What percent of the FCC guidelines does this represent? _____

CUMULATIVE ANALYSIS

7. Enter number of transmitting facilities on site: 1
8. Indicate the total estimated RF exposure from this site: _____
9. What percent of the FCC guidelines does this represent? _____

PROPOSED MITIGATION

None proposed

FOR MORE INFORMATION

For questions, contact Airlin Singewald, County Planner, at (805) 781-5198 or by email: asingewald@co.slo.ca.us.

On-site pre-application meetings can be arranged to discuss design issues and potential locations. We encourage you to schedule a pre-application meeting in advance of completing lease negotiations and applications for new wireless communications facilities.

LAKE NACIMIENTO
SLG13/CLU1326
4363 INTERLAKE ROAD
BRADLEY, CA 93426

LTE, UMTS 2C PROJECT

PROJECT INFORMATION

PROJECT DESCRIPTION:

AT&T MOBILITY PROPOSES TO MODIFY AN EXISTING UNMANNED TELECOMMUNICATIONS FACILITY BY REMOVING AN EXISTING 86'-0" AGL MONOPOLE AND INSTALLING A NEW 89'-0" AGL MONOPINE (BY OTHERS), (2) NEW OMNI ANTENNAS, (12) PANEL ANTENNAS, (4 PER SECTOR), (24) RRU'S (8 PER SECTOR), AND (2) SURGE SUPPRESSION UNITS. INSTALLATION ALSO INCLUDES (1) NEW 1900 RADIO KIT AND (1) NEW 850 RADIO KIT INSIDE EXISTING UMTS CABINET AND (1) NEW 19" RACK (WITH 6601, RAYCAP DC-12 AND FIBER SPOOL BOX) WITHIN EXISTING EQUIPMENT SHELTER. (1) NEW GPS ANTENNA MOUNTED ON EQUIPMENT SHELTER EXTERIOR.

APPLICANT:
AT&T MOBILITY
12900 PARK PLAZA DRIVE
CERRITOS, CA 90703

CODE INFORMATION:
ZONING CLASSIFICATION: REC
CONSTRUCTION TYPE: VB
OCCUPANCY: U
JURISDICTION: COUNTY OF SAN LUIS OBISPO
CURRENT USE: TELECOMMUNICATIONS FACILITY
PROPOSED USE: TELECOMMUNICATIONS FACILITY

SITE LOCATION: (BASED ON NAD 83):
LATITUDE: 35°46'38.3" (35.777306)
LONGITUDE: 120°55'54.0" (-120.931667)
TOP OF STRUCTURE AGL: 89'-0"
BASE OF STRUCTURE AMSL: 1588.4'

PARCEL NUMBER(S):
080-033-005

POWER COMPANY:
PG&E
PH: 800-468-4743

TELCO COMPANY:
VERIZON
PH: 800-954-6202

PROPERTY OWNER:
GEORGE E TAYLOR II
801 E OCEAN AVE

TEAM LEAD:
WIRELESS FACILITIES, INC (WFI)
CONTACT: TRED HAGLUND
PH: (805) 264-2680
EMAIL: TRED.HAGLUND@WFINET.COM

SITE ACQUISITION:
WIRELESS FACILITIES, INC (WFI)
CONTACT: JOHN MERRITT
EMAIL: JOHN.MERRITT@WFINET.COM

ZONING:
WIRELESS FACILITIES, INC (WFI)
CONTACT: TRICIA KNIGHT
PH: (805) 448-4221
EMAIL: TRICIA.KNIGHT@WFINET.COM

CONSTRUCTION MANAGER:
WIRELESS FACILITIES, INC (WFI)
CONTACT: KEITH YORK
PH: (650) 303-7737
EMAIL: KEITH.YORK@WFINET.COM

RF ENGINEER:
WIRELESS FACILITIES, INC (WFI)
CONTACT: PARMINDER SINGH
PH: (313) 409-5015
EMAIL: PARMINDER_SINGH@LCC.COM

GENERAL INFORMATION:
1. PARKING REQUIREMENTS ARE UNCHANGED.
2. TRAFFIC IS UNAFFECTED.

PROJECT TEAM

PROJECT ARCHITECT
THOMAS R HOLLAND, AIA
PACIFIC TELECOM SERVICES, LLC
3199C AIRPORT LOOP DRIVE
COSTA MESA, CA 92626
CONTACT: AMANDA MARTIN
PH: (206) 342-6399
EMAIL: AMARTIN@PTSWA.COM

PROJECT CONSULTANT
WIRELESS FACILITIES, INC (WFI)
321 BERNOULLI CIRCLE
OXNARD, CA 93030

VICINITY MAP

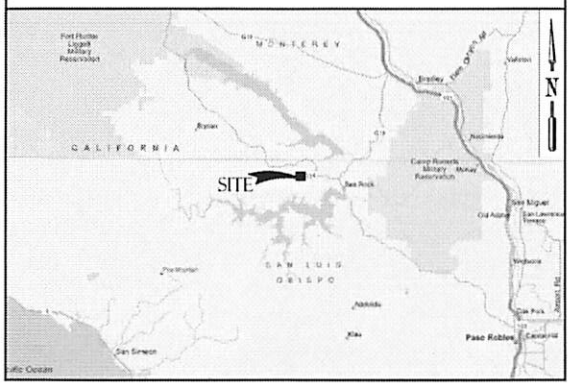

DRIVING DIRECTIONS

FROM: 18146 TOWNE CENTRE DRIVE, CERRITOS, CA 90703

HEAD NORTHWEST ON TOWNE CENTER DR TOWARD PARK PLAZA DR	0.4 MI
TURN RIGHT ONTO BLOOMFIELD AVE	0.5 MI
TURN LEFT TO MERGE ONTO CA-91W	1.7 MI
TAKE EXIT 17B TO MERGE ONTO I-605N	4.3 MI
TAKE EXIT 11 TO MERGE ONTO I-5N/SANTA ANA FWY	9.7 MI
KEEP RIGHT TO CONTINUE ON I-5N FOLLOW SIGNS FOR I-10W/SANTA MONICA/INTERSTATE 5N/SACREMENTO	2.3 MI
KEEP LEFT TO STAY ON I-5N	143 MI
TAKE EXIT 278 TOWARD LOST HILLS/PASO ROBLES	0.3 MI
TURN LEFT ONTO CA-46W/PASO ROBLES HWY	54.8 MI
CONTINUE ONTO CALIFORNIA 46	1.7 MI
SLIGHT RIGHT ONTO CA-46W	7.1 MI
CONTINUE ONTO 24TH ST	0.9 MI
SLIGHT RIGHT ONTO NACIMIENTO LAKE DR/PASO ROBLES RD	7.5 MI
TURN RIGHT ONTO GODFREY RD/NACIMIENTO LAKE DR	9.3 MI
TURN LEFT ONTO INTERLAKE RD	2.9 MI
DESTINATION WILL BE ON THE LEFT	

APPROVAL	DATE	SIGNATURE	APPROVAL	DATE	SIGNATURE
RF ENGINEER:			LANDLORD:		
RF MANAGER:			SITE ACQUISITION:		
OPPS MANAGER:			ZONING AGENT:		
CONSTR MANAGER:			PROJECT MANAGER:		
NSB MANAGER:			CONSTR MANAGER:		
TRANSPORT:					
EQUIP ENGINEER:					
COMPLIANCE:					

REVIEWERS SHALL CLEARLY PLACE INITIALS ADJACENT TO EACH REDLINE NOTE AS DRAWINGS ARE BEING REVIEWED

DRAWING INDEX

SHEET	DESCRIPTION
T-1	TITLE SHEET
C-1	SITE SURVEY (BY OTHERS)
C-2	SITE SURVEY (BY OTHERS)
A-1	SITE PLAN
A-2	ENLARGED SITE PLAN
A-3	EXISTING & PROPOSED COMPOUND PLAN
A-4	EXISTING & PROPOSED EQUIPMENT SHELTER PLAN
A-5	EXISTING & PROPOSED ANTENNA PLAN
A-6	EXISTING & PROPOSED NORTH ELEVATION
A-7	EXISTING & PROPOSED EAST ELEVATION
RF-1	ANTENNA CONFIGURATIONS
RF-2	ANTENNA DETAILS

CODE COMPLIANCE

2010 BUILDING STANDARDS ADMINISTRATION CODE
– PART 1, TITLE 24, C.C.R.
2010 CALIFORNIA BUILDING CODE (CBC)
– PART 2, TITLE 24, C.C.R.
2009 INTERNATIONAL BUILDING CODE (IBC)
– VOLUMES 1-3 & CALIFORNIA AMENDMENTS
2010 CALIFORNIA ELECTRICAL CODE (CEC)
– PART 3, TITLE 24, C.C.R.
2009 NATIONAL ELECTRICAL CODE (NEC)
– INCLUDING 2010 CALIFORNIA AMENDMENTS
2010 CALIFORNIA MECHANICAL CODE (CMC)
– PART 4, TITLE 24, C.C.R.
2009 INTERNATIONAL MECHANICAL CODE (IMC)
– INCLUDING 2010 CALIFORNIA AMENDMENTS
2010 CALIFORNIA PLUMBING CODE (CPC)
– PART 5, TITLE 24, C.C.R.
2009 INTERNATIONAL PLUMBING CODE (IPC)
– INCLUDING 2010 CALIFORNIA AMENDMENTS
2010 CALIFORNIA ENERGY CODE (CEC)
– PART 6, TITLE 24, C.C.R.
2004 ASME A17.1 SAFETY CODE
– FOR ELEVATORS AND ESCALATORS
2010 CALIFORNIA FIRE CODE (CFC)
– PART 9, TITLE 24, C.C.R.
2009 INTERNATIONAL FIRE CODE (IFC)
– INCLUDING 2010 CALIFORNIA AMENDMENTS
2010 CALIFORNIA REFERENCED STANDARDS
– PART 12, TITLE 24, C.C.R.
– TITLE 19, C.C.R.
PUBLIC SAFETY, STATE FIRE MARSHAL REGULATIONS
ANSI/EIA/TIA-222-G STANDARDS FOR BROADCAST STRUCTURES, LOCAL CODES AND ORDINANCES.

IN THE EVENT OF A CONFLICT, THE MOST RESTRICTIVE CODE SHALL PREVAIL.

ABBREVIATIONS

A/C	AIR CONDITIONING
AGL	ABOVE GROUND LEVEL
APPROX	APPROXIMATELY
BLDG	BUILDING
BLK	BLOCKING
CLG	CEILING
CLR	CLEAR
COAX	COAXIAL CABLE
CONC	CONCRETE
CONST	CONSTRUCTION
CONT	CONTINUOUS
DBL	DOUBLE
DIA	DIAMETER
DIAG	DIAGONAL
DN	DOWN
DET	DETAIL
DWG	DRAWING
EA	EACH
ELEV	ELEVATION
ELEC	ELECTRICAL
EQ	EQUAL
EQUIP	EQUIPMENT
EXT	EXTERIOR
FIN	FINISH
FLUOR	FLUORESCENT
FLR	FLOOR
FT	FOOT
FRP	FIBER-REINFORCED POLYMER
GA	GAUGE
GALV	GALVANIZED
GC	GENERAL CONTRACTOR
GPS	GLOBAL POSITIONING SYSTEM
GND	GROUND
HORZ	HORIZONTAL
HR	HOUR
HT	HEIGHT
HVAC	HEATING VENTILATION AIR CONDITIONING
ID	INSIDE DIAMETER
IN	INCH
INFO	INFORMATION
INSUL	INSULATION
INT	INTERIOR
IBC	INTERNATIONAL BUILDING CODE
LBS	POUNDS
LMU	LOCATION MEASUREMENT UNIT
LTE	LONG TERM EVOLUTION
MAX	MAXIMUM
MECH	MECHANICAL
MTL	METAL
MFR	MANUFACTURE
MGR	MANAGER
MIN	MINIMUM
MISC	MISCELLANEOUS
NA	NOT APPLICABLE
NIC	NOT IN CONTRACT
NTS	NOT TO SCALE
OC	ON CENTER
OD	OUTSIDE DIAMETER
PLYWD	PLYWOOD
PROJ	PROJECT
PROP	PROPERTY
PT	PRESSURE TREATED
REQ	REQUIRED
RF	RADIO FREQUENCY
RM	ROOM
RO	ROUGH OPENING
RRH	REMOTE RADIO HEAD
RRU	REMOTE RADIO UNIT
SHT	SHEET
SIM	SIMILAR
SPEC	SPECIFICATION
SF	SQUARE FOOT
SS	STAINLESS STEEL
STL	STEEL
STRUCT	STRUCTURAL
STD	STUD
SUSP	SUSPENDED
THRU	THROUGH
TMA	TOWER MOUNTED AMPLIFIER
TWNG	TWINED
TYP	TYPICAL
UNO	UNLESS NOTED OTHERWISE
VERT	VERTICAL
VF	VERIFY IN FIELD
W/	WITH
W/O	WITHOUT
WP	WATER PROOF

at&t
AT&T MOBILITY
12900 PARK PLAZA DR
CERRITOS, CA 90703

WFI
WIRELESS FACILITIES, INC
321 BERNOULLI CIRCLE
OXNARD, CA 93030

PTS
PACIFIC TELECOM SERVICES, LLC
3199C AIRPORT LOOP DRIVE
COSTA MESA, CA 92626

LAKE NACIMIENTO
SLG13/CLU1326
4363 INTERLAKE ROAD
BRADLEY, CA 93426

REVISIONS

NO.	DATE	DESCRIPTION	INITIAL
A	04/08/13	ISSUED FOR 90% ZONING	SS
B	04/09/13	ISSUED FOR 90% ZONING	AP
1	04/24/13	ISSUED FOR 100% ZONING	SS

NOT FOR CONSTRUCTION UNLESS LABELED AS CONSTRUCTION SET

SHEET TITLE
TITLE SHEET

SHEET NUMBER
T-1

THE INFORMATION CONTAINED IN THIS SET OF CONSTRUCTION DOCUMENTS IS PROPRIETARY BY NATURE. ANY USE OR DISCLOSURE OTHER THAN THAT WHICH RELATES TO CARRIER SERVICES IS STRICTLY PROHIBITED.

NOTES

OWNER(S): GEORGE E. TAYLOR

APN: 080-033-005

THE INFORMATION SHOWN HEREON IS BASED UPON A FIELD SURVEY AND A COMPILATION OF AVAILABLE RECORD AND TITLE INFORMATION. UNLESS NOTED OTHERWISE, PROPERTY LINES ARE DERIVED FROM RECORD INFORMATION. THE INTENT OF THIS DRAWING IS FOR EXAMINATION ONLY. THIS IS NOT A BOUNDARY SURVEY.

THE EASEMENTS (IF ANY) THAT APPEAR ON THIS MAP HAVE BEEN PLOTTED BASED SOLELY ON INFORMATION CONTAINED IN THE CONDITION OF TITLE REPORT BY: XXXXXXXX TITLE COMPANY, TITLE NO. XXXXXX, DATED XXXX X, 2012. WITHIN SAID TITLE REPORT THERE ARE XXXX (XX) EXCEPTIONS LISTED, XXXX (XX) OF WHICH ARE EASEMENTS AND XXXX (XX) OF WHICH CAN NOT BE PLOTTED.

THE UNDERGROUND UTILITIES (IF ANY) THAT APPEAR ON THIS MAP HAVE BEEN LOCATED BY FIELD OBSERVATION. THE SURVEYOR MAKES NO GUARANTEE THAT THE UNDERGROUND UTILITIES SHOWN COMPRISE ALL SUCH UTILITIES IN THE AREA, EITHER IN SERVICE OR ABANDONED. THE SURVEYOR FURTHER DOES NOT WARRANT THAT THE UNDERGROUND UTILITIES SHOWN ARE IN THE EXACT LOCATION INDICATED ALTHOUGH HE DOES STATE THAT THEY ARE LOCATED AS ACCURATELY AS POSSIBLE FROM THE INFORMATION AVAILABLE.

THE FEDERAL EMERGENCY MANAGEMENT AGENCY FLOOD RATE MAP FOR COMMUNITY NO. 060304, PANEL NO. 01000G, DATED NOVEMBER 16, 2012, SHOWS THAT THE LOCATION OF THIS SITE FALLS WITHIN ZONE X, WHICH ARE AREAS DETERMINED TO BE OUTSIDE THE 0.2% ANNUAL CHANCE FLOODPLAIN.

THE LATITUDE AND LONGITUDE AT THE LOCATION AS SHOWN WAS DETERMINED BY GPS OBSERVATIONS.

LAT. 35°46'38.3" N. NAD 83
LONG. 120°55'54.0" W. NAD 83
ELEV. 1566.4' NAVD 88 (BASIS OF DRAWING)

The information shown above meets or exceeds the requirements set forth in FAA order 6250.19D for 1-A accuracy (± 20' horizontally and ± 3' vertically). The horizontal datum (coordinates) are expressed as degrees, minutes and seconds, to the nearest tenth of a second. The vertical datum (heights) are expressed in feet and decimals thereof and are determined to the nearest 0.1 foot.

LESSOR'S PROPERTY LEGAL DESCRIPTION PER TITLE REPORT:

T.B.D.

EASEMENTS PER TITLE REPORT:

T.B.D.

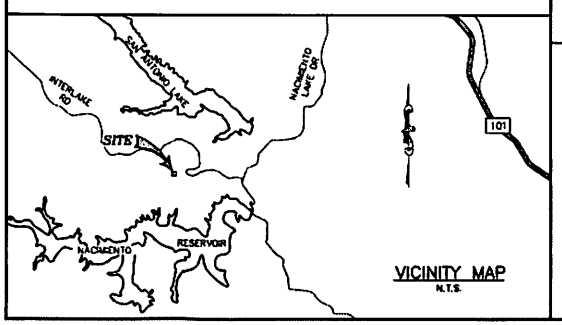

VICINITY MAP
N.T.S.

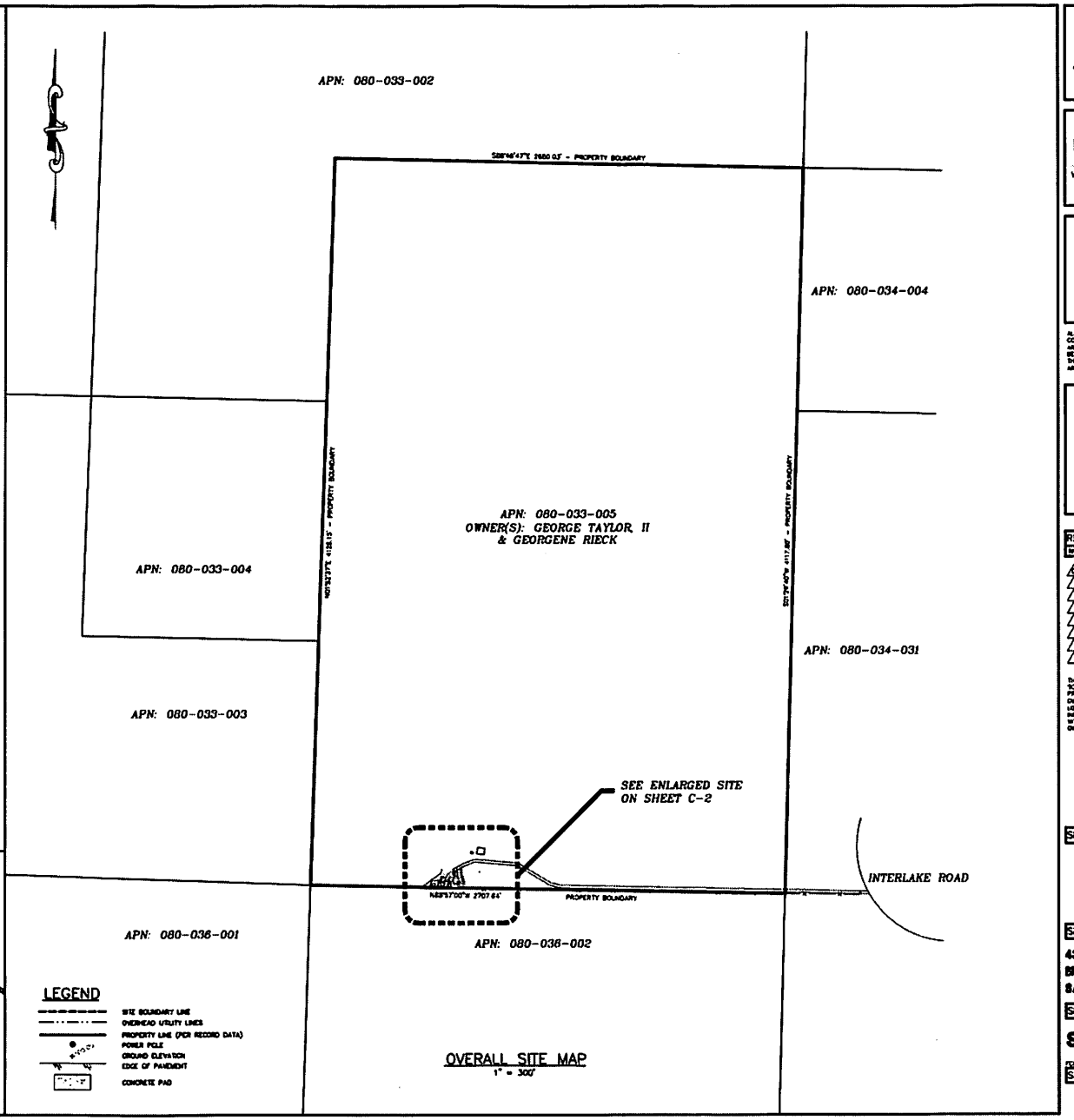

OVERALL SITE MAP
1" = 300'

AT&T
AT&T WIRELESS SERVICES
12800 PARK PLAZA DRIVE
CERRITOS, CA 90703

WFI
wireless facilities, inc.
521 BRANDYWINE CIRCLE
OXNARD, CA 93030

SMITHCO
SURVEYING & ENGINEERING
P.O. BOX 5166 BAKERSFIELD, CA 93388
PHONE: (661) 393-1217 FAX: (661) 393-1218

ALL DRAWINGS AND WRITTEN MATERIAL CONTAINED HEREIN ARE THE PROPERTY OF THE ARCHITECT/ENGINEER/SURVEYOR AND MAY NOT BE DUPLICATED, USED OR DISCLOSED WITHOUT THE WRITTEN CONSENT OF THE ARCHITECT/ENGINEER/SURVEYOR

SPACE RESERVED FOR PROFESSIONAL SEAL

REVISION

NO.	DESCRIPTION	BY	DATE
0	PRELIM. ISSUE	SL	01/21/13
1			
2			
3			
4			
5			
6			
7			

THIS DRAWING IS COPYRIGHTED AND IS THE SOLE PROPERTY OF THE OWNER. IT IS PRODUCED SOLELY FOR THE USE BY THE OWNER AND ITS AFFILIATES. REPRODUCTION OR USE OF THIS DRAWING AND/OR THE INFORMATION CONTAINED IN IT IS FORBIDDEN WITHOUT THE WRITTEN PERMISSION OF THE OWNER

DRAWN BY: SL
CHECKED BY: GJS
DATE DRAWN: 01/21/13
SMITHCO JOB #: 90-042

SITE NAME

SLG13
LAKE NACAMIENTO

SITE ADDRESS

4363 INTERLAKE ROAD
BRADLEY, CA 93426
SAN LUIS OBISPO COUNTY

SHEET TITLE

SITE SURVEY

FOR EXAMINATION ONLY

SHEET

C-1

PROPOSED LESSEE LEASE/LICENSE AREA DESCRIPTION:

T.B.D.

PROPOSED LESSEE NON-EXCLUSIVE ACCESS ROUTE DESCRIPTION:

T.B.D.

PROPOSED LESSEE UTILITY ROUTE DESCRIPTION:

T.B.D.

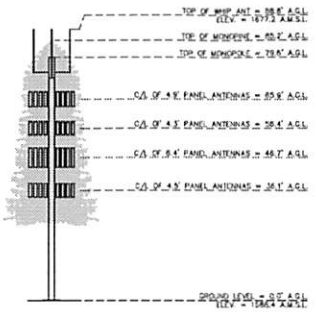

TOWER ELEVATION
1" = 20'

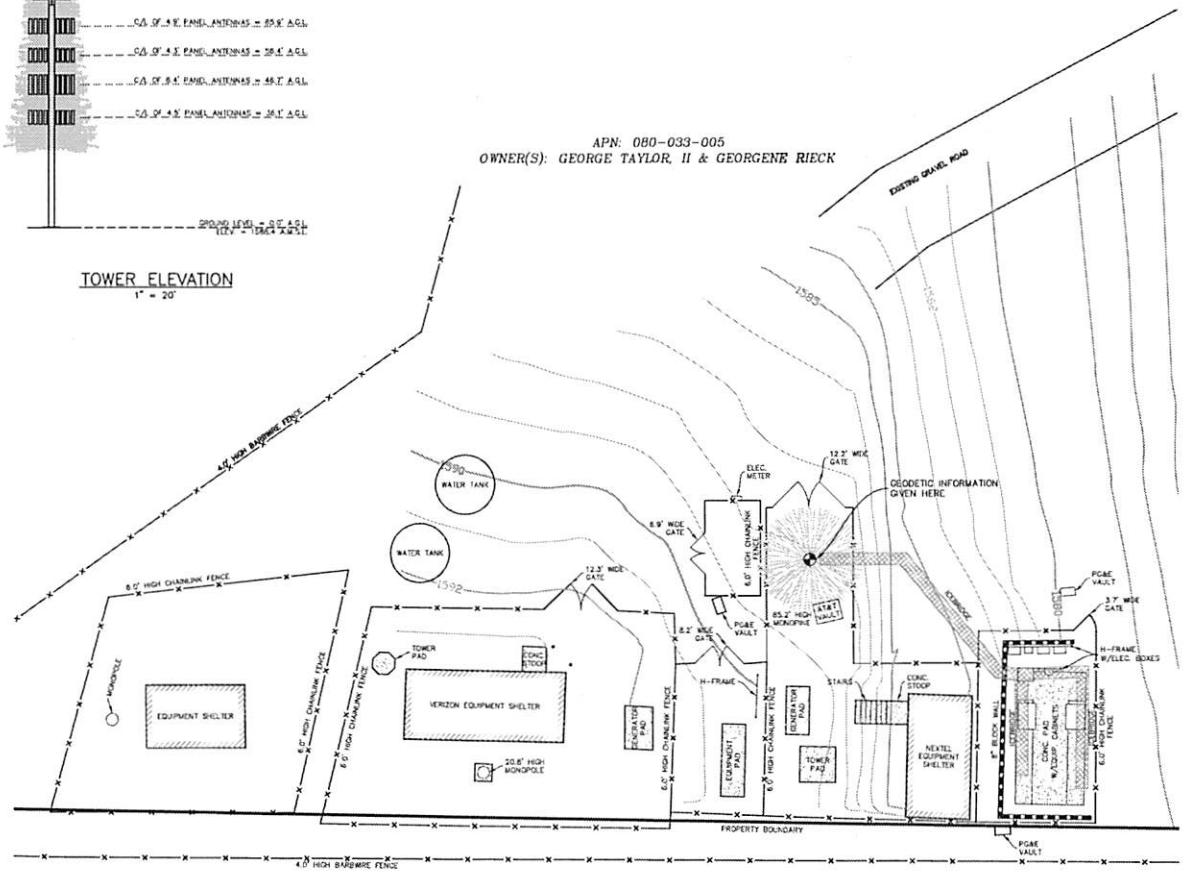

ENLARGED SITE PLAN
1" = 10'

LEGEND

- SITE BOUNDARY LINE
- OVERHEAD UTILITY LINES
- PROPERTY LINE (PER RECORD DATA)
- POWER POLE
- GROUND ELEVATION
- EDGE OF PAVEMENT
- CONCRETE PAD

AT&T
AT&T WIRELESS SERVICES
10900 PARK PLAZA DRIVE
CERRITOS, CA 90703

WFI
wireless facilities, inc.
321 BERNOULLI CIRCLE
OXNARD, CA 93030

SMITHCO
SURVEYING ENGINEERING
P.O. BOX 81626 BAKERSFIELD, CA 93380
PHONE: (661) 393-1217 FAX: (661) 393-1218

ALL DRAWINGS AND WRITTEN MATERIAL CONTAINED HEREIN ARE THE PROPERTY OF THE ARCHITECT/ENGINEER/SURVEYOR AND MAY NOT BE DUPLICATED, USED, OR DISCLOSED WITHOUT THE WRITTEN CONSENT OF THE ARCHITECT/ENGINEER/SURVEYOR.

SPACE RESERVED FOR PROFESSIONAL SEAL

REVISION

NO.	DESCRIPTION	BY	DATE
0	PRELIM. ISSUE	SL	01/21/13

THIS DRAWING IS COPYRIGHTED AND IS THE SOLE PROPERTY OF THE OWNER. IT IS PRODUCED SOLEY FOR THE USE BY THE OWNER AND ITS AFFILIATES. REPRODUCTION OR USE OF THIS DRAWING AND/OR THE INFORMATION CONTAINED IN IT IS FORBIDDEN WITHOUT THE WRITTEN PERMISSION OF THE OWNER.

DRAWN BY: SL
CHECKED BY: GJS
DATE DRAWN: 01/21/13
SMITHCO JOB #: 90-042

SITE NAME

SLG13
LAKE NACAMIENTO

SITE ADDRESS

4363 INTERLAKE ROAD
BRADLEY, CA 93426
SAN LUIS OBISPO COUNTY

SHEET TITLE

SITE SURVEY

FOR EXAMINATION ONLY

SHEET

C-2

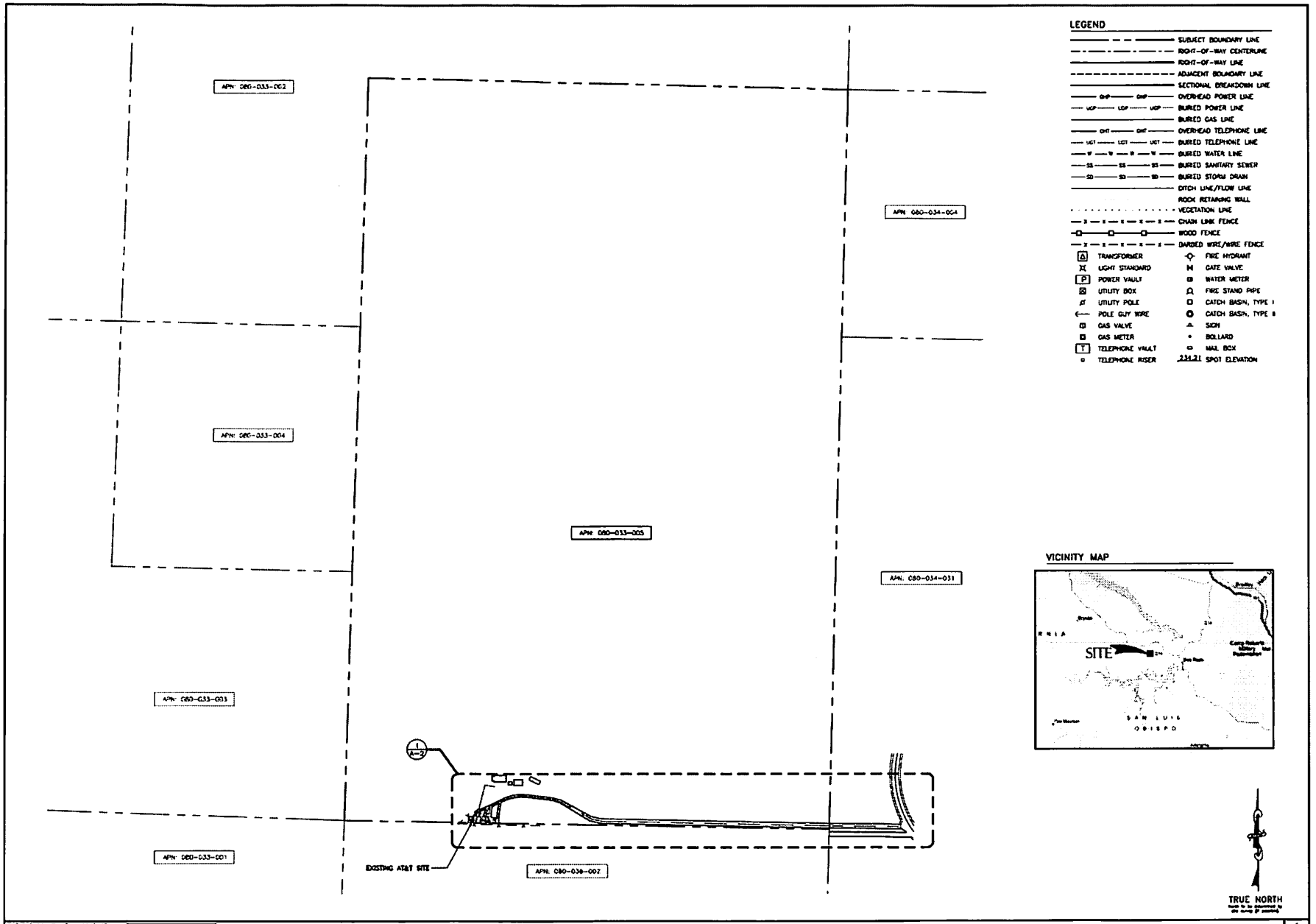

SITE PLAN 1

at&t
AT&T MOBILITY
12800 PARK PLAZA DR
CERRITOS, CA 90703

WFI
WIRELESS FACILITIES, INC
521 BERNARDO CIRCLE
ESCONDIDO, CA 92030

PTS
PACIFIC TELECOM SERVICES, LLC
3100C AIRPORT LOOP DRIVE
COSTA MESA, CA 92626

LAKE NACIMIENTO
SLG13/CLU1326

4363 INTERLAKE ROAD
BRADLEY, CA 93426

REVISIONS

NO	DATE	DESCRIPTION	INITIAL
A	[illegible]	ISSUED FOR 90% ZONING	SS
0	[illegible]	ISSUED FOR 95% ZONING	AF
1	[illegible]	ISSUED FOR 100% ZONING	SS

NOT FOR CONSTRUCTION UNLESS LABELED AS CONSTRUCTION SET

SHEET TITLE
SITE PLAN

SHEET NUMBER
A-1

THE INFORMATION CONTAINED IN THIS SET OF CONSTRUCTION DOCUMENTS IS PROPRIETARY BY NATURE. ANY USE OR DISCLOSURE OTHER THAN THAT WHICH RELATES TO CARRIER SERVICES IS STRICTLY PROHIBITED.

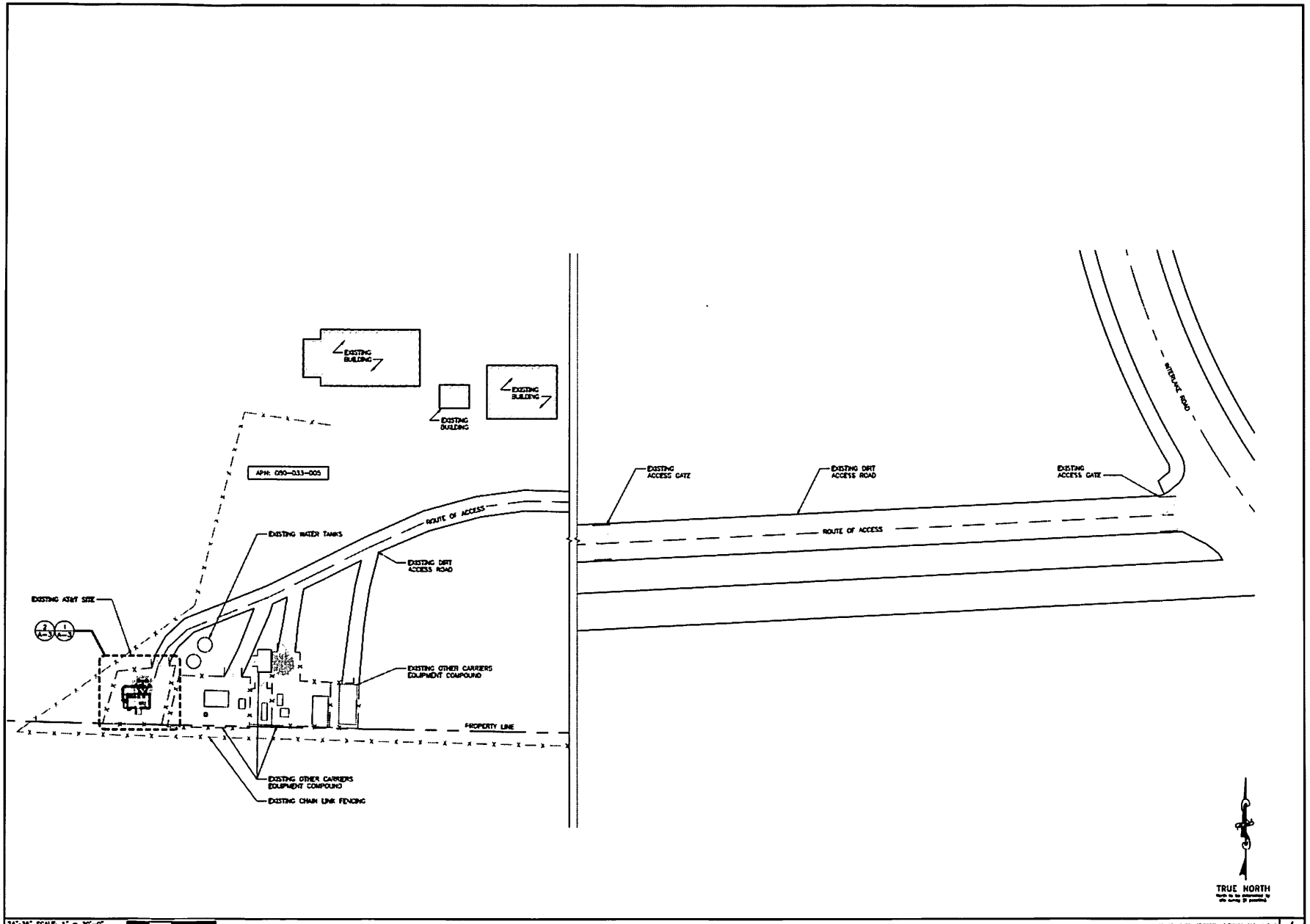

24"x36" SCALE: 1" = 30'-0"
11"x17" SCALE: 1" = 60'-0"

ENLARGED SITE PLAN | 1

THE INFORMATION CONTAINED IN THIS SET OF CONSTRUCTION DOCUMENTS IS PROPRIETARY BY NATURE. ANY USE OR DISCLOSURE OTHER THAN THAT WHICH RELATES TO CARRIER SERVICES IS STRICTLY PROHIBITED.

at&t
AT&T MOBILITY
12900 PARK PLAZA DR
CERRITOS, CA 90703

WFI
WIRELESS FACILITIES, INC
321 BERNOULLI CIRCLE
OXNARD, CA 93030

PTS
PACIFIC TELECOM SERVICES, LLC
2100C AIRPORT LOOP DRIVE
COSTA MESA, CA 92626

LAKE NACIMIENTO
SLG13/CLU1326

4363 INTERLAKE ROAD
BRADLEY, CA 93426

REVISIONS

NO.	DATE	DESCRIPTION	INITIAL
A	[illegible]	ISSUED FOR 90% ZONING	SS
B	[illegible]	ISSUED FOR 90% ZONING	AF
1	[illegible]	ISSUED FOR 100% ZONING	SS

NOT FOR CONSTRUCTION UNLESS LABELED AS CONSTRUCTION SET

SHEET TITLE
ENLARGED SITE PLAN

SHEET NUMBER
A-2

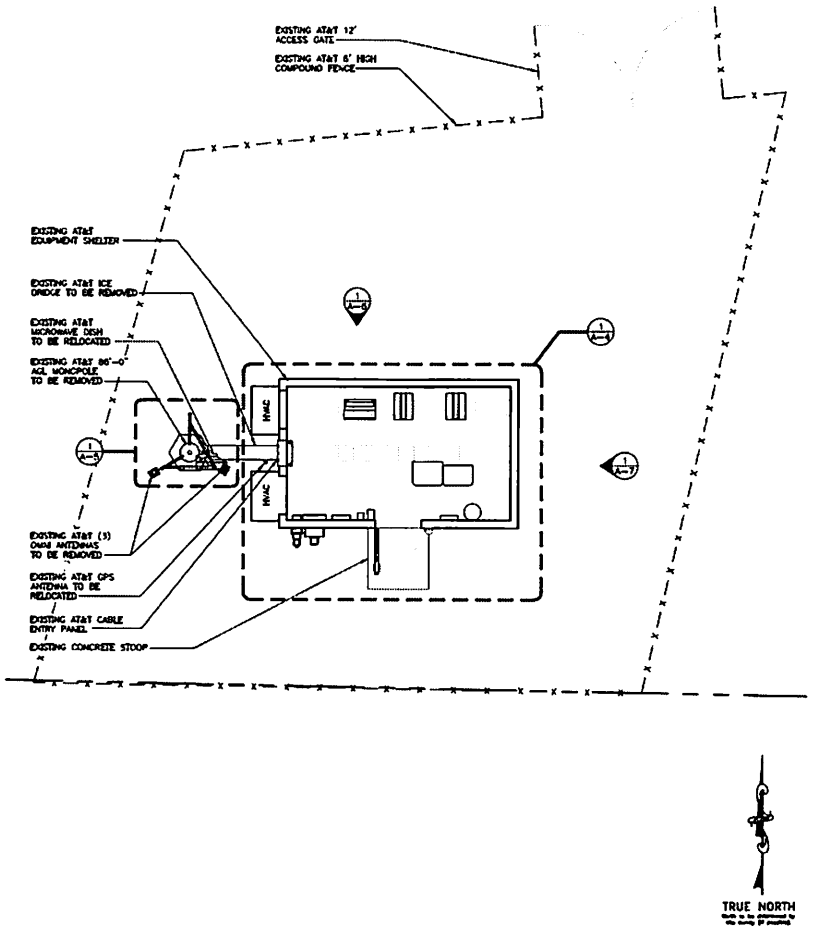

24"x36" SCALE: 1/4" = 1'-0"
11"x17" SCALE: 1/8" = 1'-0"

EXISTING COMPOUND PLAN | 1

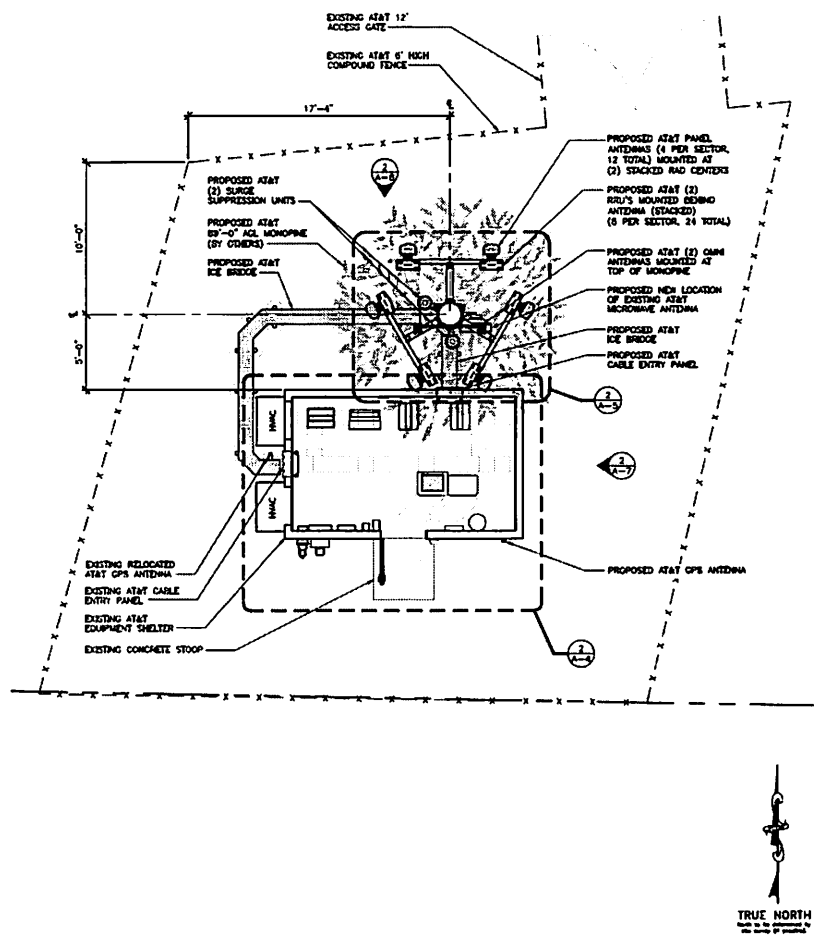

24"x36" SCALE: 1/4" = 1'-0"
11"x17" SCALE: 1/8" = 1'-0"

PROPOSED COMOPOUND PLAN | 2

THE INFORMATION CONTAINED IN THIS SET OF CONSTRUCTION DOCUMENTS IS PROPRIETARY BY NATURE. ANY USE OR DISCLOSURE OTHER THAN THAT WHICH RELATES TO CARRIER SERVICES IS STRICTLY PROHIBITED.

at&t
AT&T MOBILITY
12800 PARK PLAZA DR
CERRITOS, CA 90703

WFI
WIRELESS FACILITIES, INC
321 BERNHARD CIRCLE
ONTARIO, CA 93230

PTS
PACIFIC TELECOM SERVICES, LLC
3100C AIRPORT LOOP DRIVE
COSTA MESA, CA 92626

LAKE NACIMIENTO
SLG13/CLU1326

4363 INTERLAKE ROAD
BRADLEY, CA 93426

REVISIONS

NO.	DATE	DESCRIPTION	INITIAL
A	[illegible]	ISSUED FOR BOS ZONING	SS
0	[illegible]	ISSUED FOR BOS ZONING	AF
1	[illegible]	ISSUED FOR BOS ZONING	SS

NOT FOR CONSTRUCTION UNLESS LABELED AS CONSTRUCTION SET

SHEET TITLE
EXISTING & PROPOSED COMPOUND PLAN

SHEET NUMBER
A-3

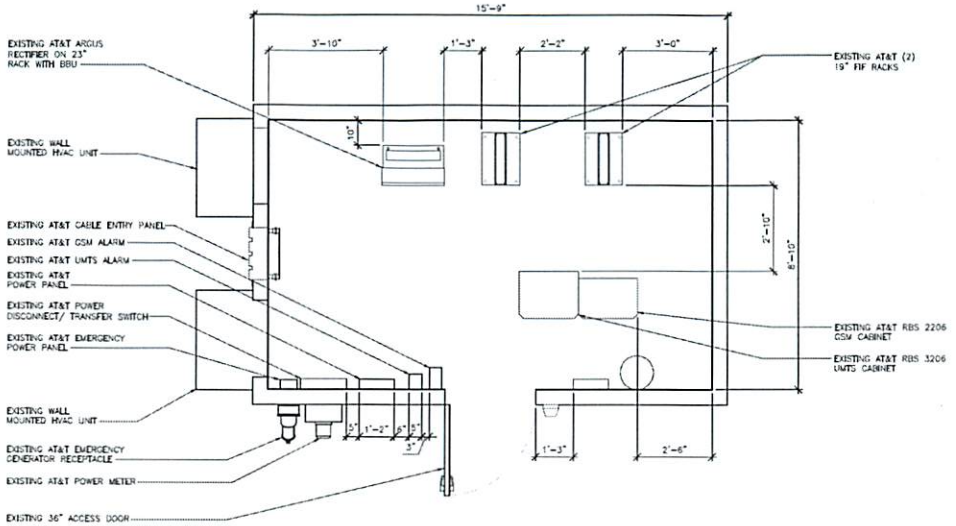

24"x36" SCALE: 1/2" = 1'-0"
11"x17" SCALE: 1/4" = 1'-0"

EXISTING EQUIPMENT SHELTER PLAN | 1

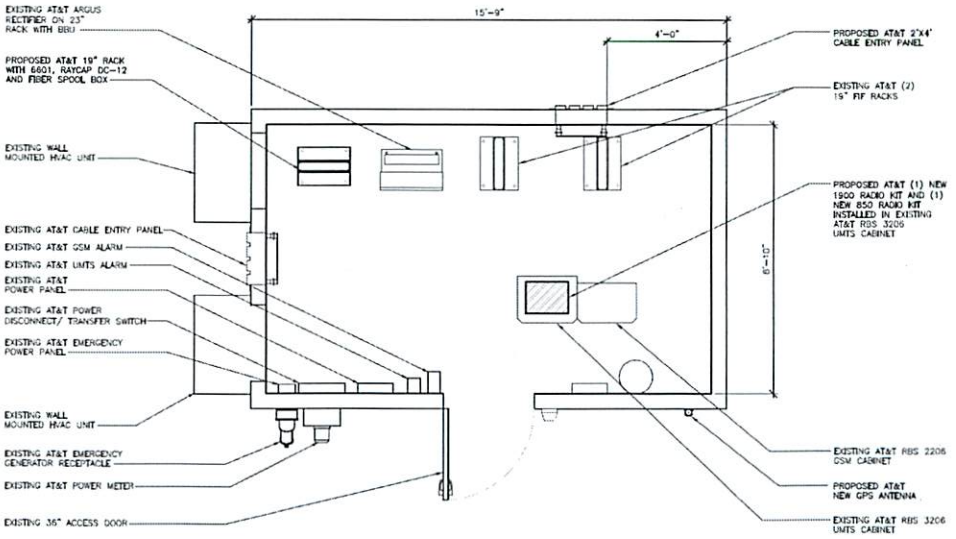

24"x36" SCALE: 1/2" = 1'-0"
11"x17" SCALE: 1/4" = 1'-0"

PROPOSED EQUIPMENT SHELTER PLAN | 2

THE INFORMATION CONTAINED IN THIS SET OF CONSTRUCTION DOCUMENTS IS PROPRIETARY BY NATURE. ANY USE OR DISCLOSURE OTHER THAN THAT WHICH RELATES TO CARRIER SERVICES IS STRICTLY PROHIBITED.

at&t
AT&T MOBILITY
12900 PARK PLAZA DR
CERRITOS, CA 90703

WFI
WIRELESS FACILITIES, INC
321 BERNOULLI CIRCLE
OXNARD, CA 93030

PTS
PACIFIC TELECOM SERVICES, LLC
3180C AIRPORT LOOP DRIVE
COSTA MESA, CA 92626

LAKE NACIMIENTO
SLG13/CLU1326

4363 INTERLAKE ROAD
BRADLEY, CA 93426

REVISIONS

NO.	DATE	DESCRIPTION	INITIAL
A	04/08/13	ISSUED FOR 90% ZONING	SB
B	04/15/13	ISSUED FOR 95% ZONING	AF
1	04/24/13	ISSUED FOR 100% ZONING	SB

NOT FOR CONSTRUCTION UNLESS LABELED AS CONSTRUCTION SET

SHEET TITLE
EXISTING & PROPOSED EQUIPMENT SHELTER PLAN

SHEET NUMBER
A-4

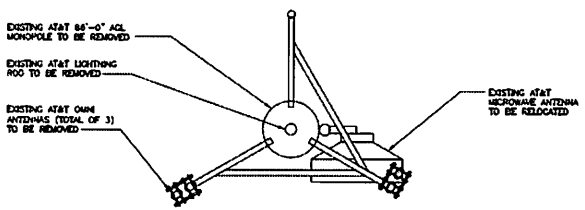

24"x36" SCALE: 3/4" = 1'-0"
11"x17" SCALE: 3/8" = 1'-0"

EXISTING ANTENNA PLAN | 1

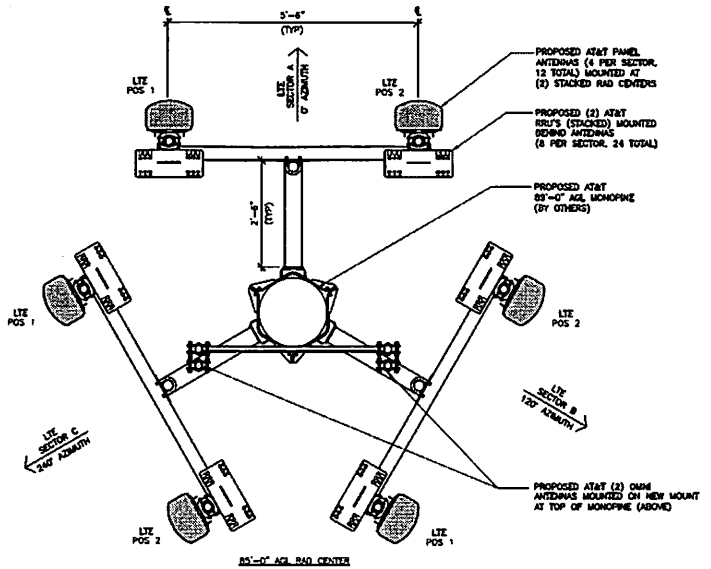

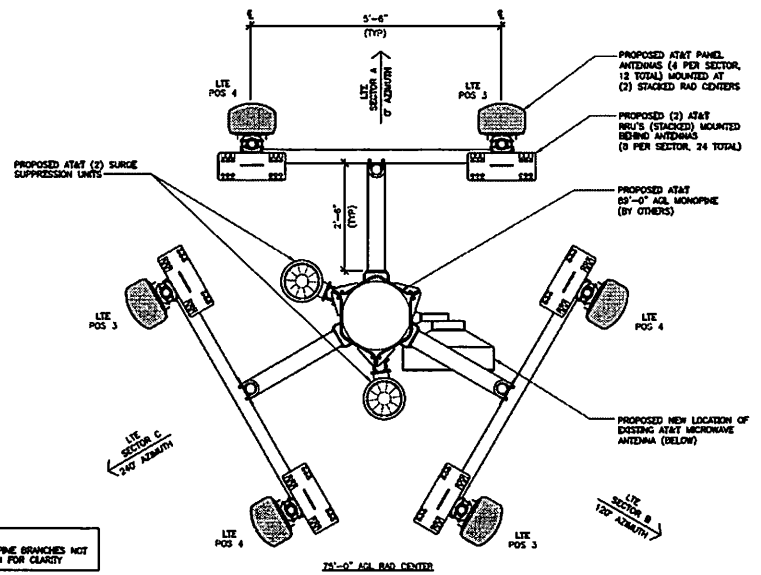

NOTE:
MONOPINE BRANCHES NOT SHOWN FOR CLARITY

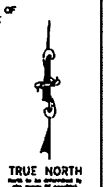

24"x36" SCALE: 3/4" = 1'-0"
11"x17" SCALE: 3/8" = 1'-0"

PROPOSED ANTENNA PLAN | 2

THE INFORMATION CONTAINED IN THIS SET OF CONSTRUCTION DOCUMENTS IS PROPRIETARY BY NATURE. ANY USE OR DISCLOSURE OTHER THAN THAT WHICH RELATES TO CARRIER SERVICES IS STRICTLY PROHIBITED.

at&t
AT&T MOBILITY
12900 PARK PLAZA DR
CERRITOS, CA 90703

WFI
WIRELESS FACILITIES, INC
321 BERNOULLI CIRCLE
OXNARD, CA 93030

PTS
PACIFIC TELECOM SERVICES, LLC
2100C AIRPORT LOOP DRIVE
COSTA MESA, CA 92626

LAKE NACIMIENTO
SLG13/CLU1326

4363 INTERLAKE ROAD
BRADLEY, CA 93426

REVISIONS

NO.	DATE	DESCRIPTION	INITIAL
A	01/08/13	ISSUED FOR 90% ZONING	SS
0	01/15/13	ISSUED FOR 90% ZONING	AF
1	01/30/13	ISSUED FOR 100% ZONING	SS

NOT FOR CONSTRUCTION UNLESS LABELED AS CONSTRUCTION SET

SHEET TITLE
EXISTING & PROPOSED ANTENNA PLAN

SHEET NUMBER
A-5

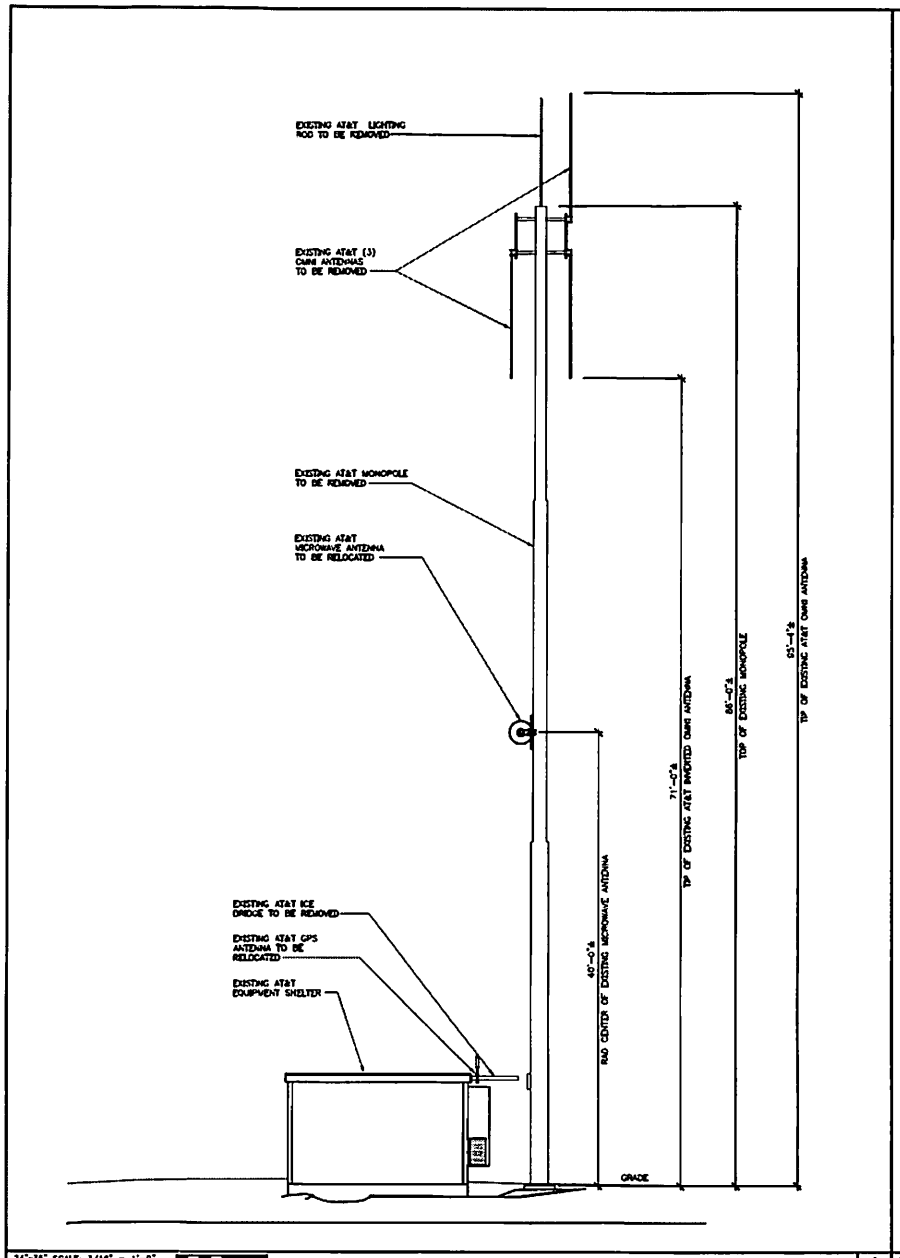

24"x36" SCALE: 3/16" = 1'-0"
11"x17" SCALE: 3/32" = 1'-0"

EXISTING NORTH ELEVATION 1

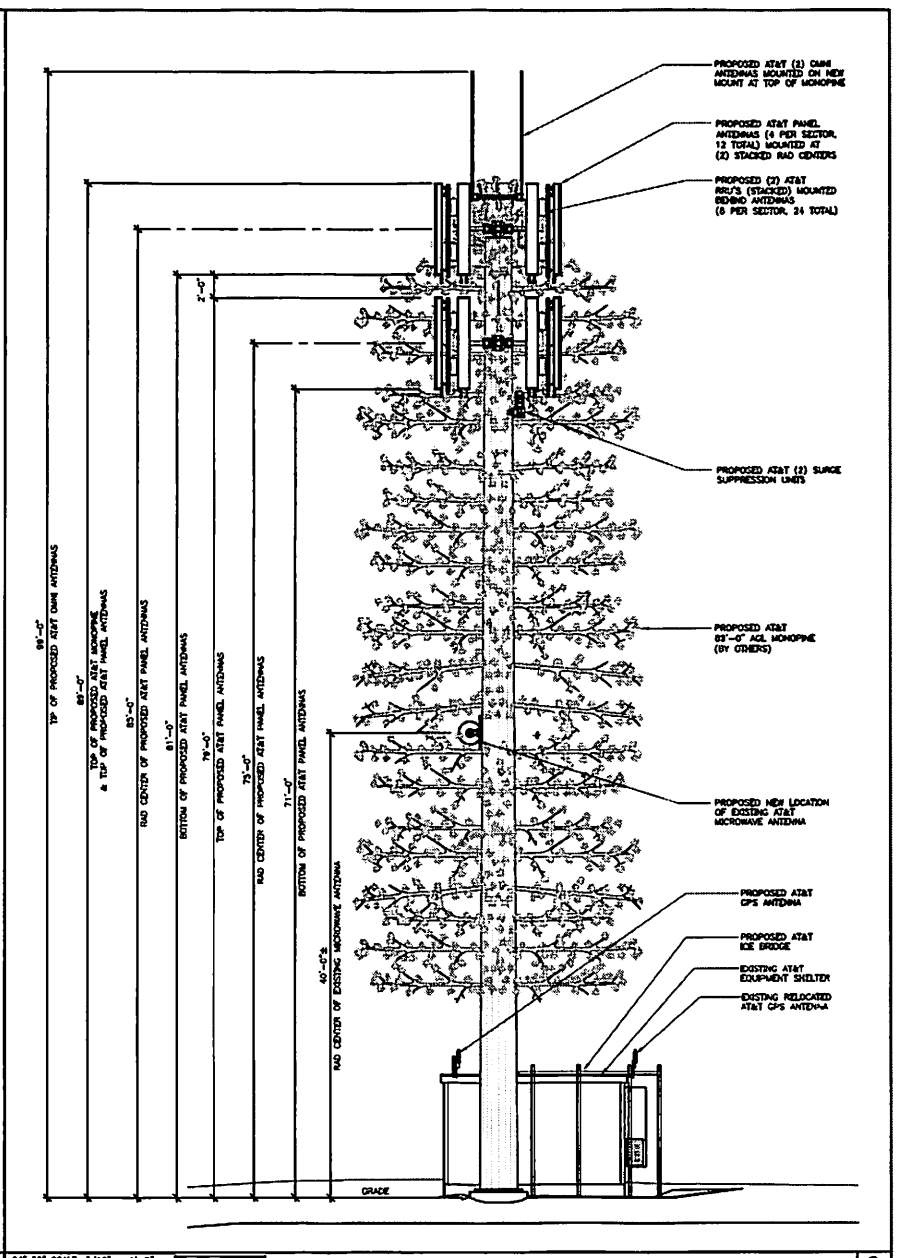

24"x36" SCALE: 3/16" = 1'-0"
11"x17" SCALE: 3/32" = 1'-0"

PROPOSED NORTH ELEVATION 2

THE INFORMATION CONTAINED IN THIS SET OF CONSTRUCTION DOCUMENTS IS PROPRIETARY BY NATURE. ANY USE OR DISCLOSURE OTHER THAN THAT WHICH RELATES TO CARRIER SERVICES IS STRICTLY PROHIBITED.

at&t
AT&T MOBILITY
12900 PARK PLAZA DR
CERRITOS, CA 90703

WFI
WIRELESS FACILITIES, INC
521 BERNOULLI CIRCLE
OXNARD, CA 93030

PTS
PACIFIC TELECOM SERVICES, LLC
31800 AIRPORT LOOP DRIVE
COSTA MESA, CA 92626

LAKE NACIMIENTO
SLG13/CLU1326

4363 INTERLAKE ROAD
BRADLEY, CA 93426

REVISIONS

NO.	DATE	DESCRIPTION	INITIAL
A	[illegible]	ISSUED FOR 90% ZONING	SS
B	[illegible]	ISSUED FOR 95% ZONING	AF
1	[illegible]	ISSUED FOR 100% ZONING	SS

NOT FOR CONSTRUCTION UNLESS LABELED AS CONSTRUCTION SET

SHEET TITLE
EXISTING & PROPOSED NORTH ELEVATION

SHEET NUMBER
A-6

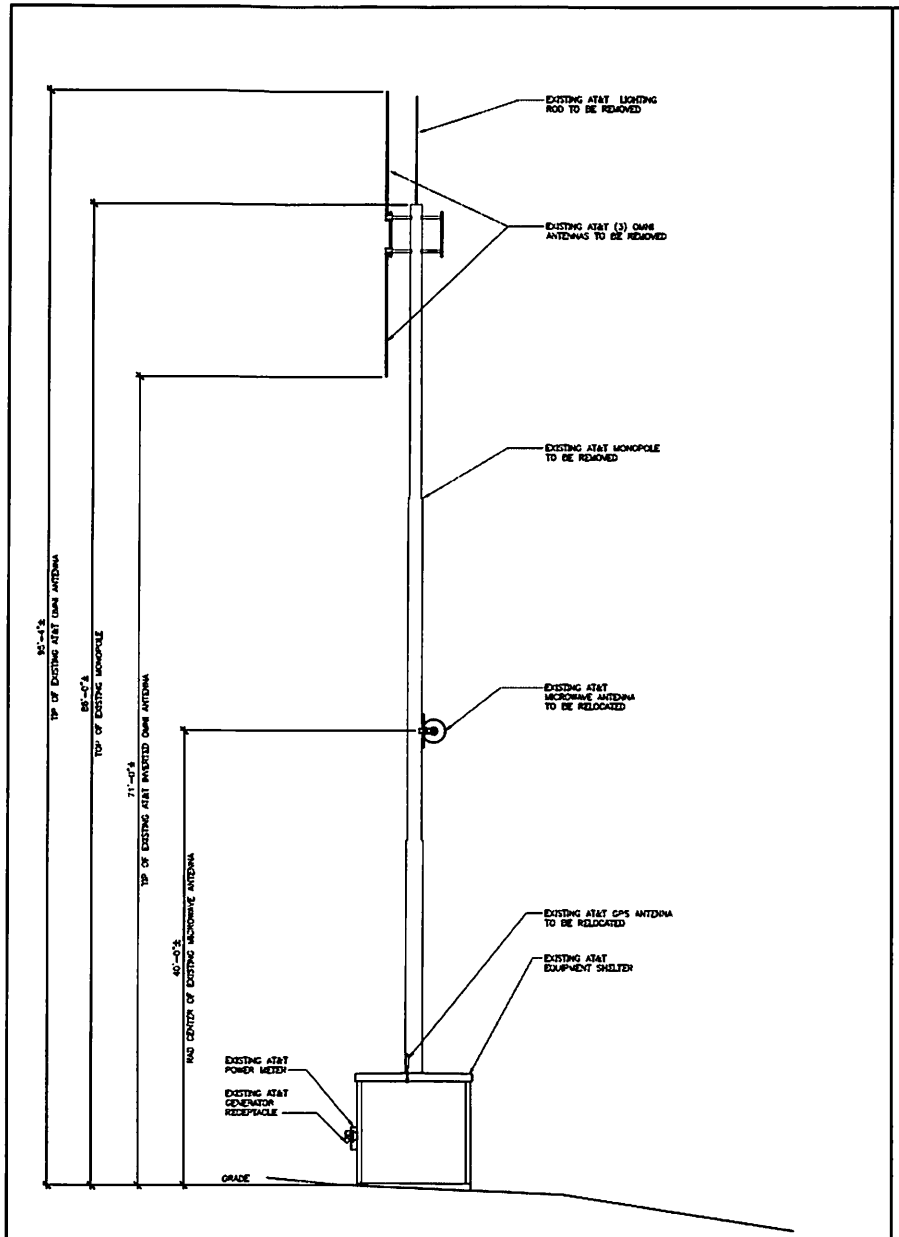

24"x36" SCALE: 3/16" = 1'-0"
11"x17" SCALE: 3/32" = 1'-0"

EXISTING EAST ELEVATION 1

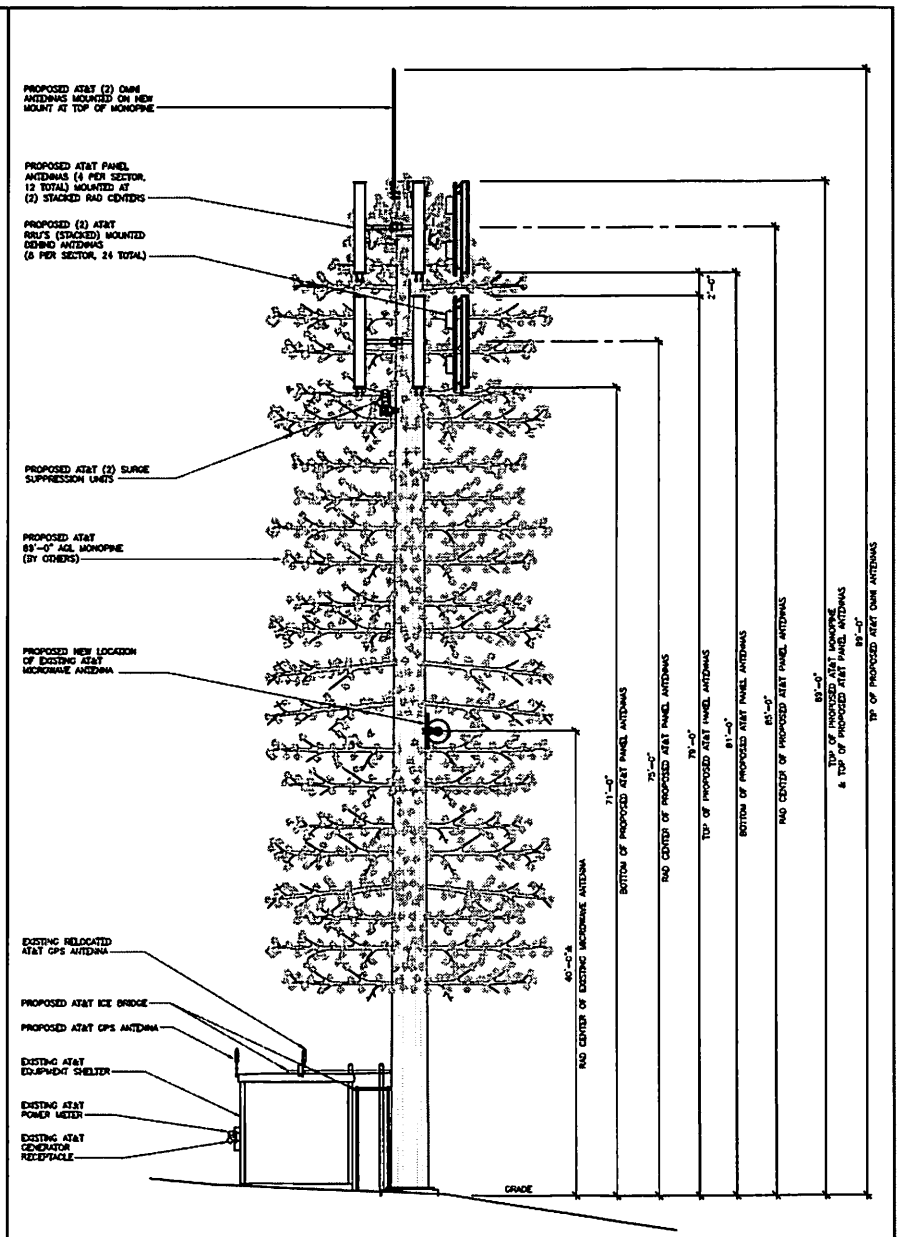

24"x36" SCALE: 3/16" = 1'-0"
11"x17" SCALE: 3/32" = 1'-0"

PROPOSED EAST ELEVATION 2

at&t
AT&T MOBILITY
12900 PARK PLAZA DR
CERRITOS, CA 90703

WFI
WIRELESS FACILITIES, INC
521 BERNOULLI CIRCLE
OXNARD, CA 93030

PTS
PACIFIC TELECOM SERVICES, LLC
3100C AIRPORT LOOP DRIVE
COSTA MESA, CA 92626

LAKE NACIMIENTO
SLG13/CLU1326
4363 INTERLAKE ROAD
BRADLEY, CA 93426

REVISIONS

NO	DATE	DESCRIPTION	INITIAL
A	[illegible]	ISSUED FOR 90% ZONING	SS
B	[illegible]	ISSUED FOR 90% ZONING	AF
1	[illegible]	ISSUED FOR 100% ZONING	SS

NOT FOR CONSTRUCTION UNLESS LABELED AS CONSTRUCTION SET

SHEET TITLE
EXISTING & PROPOSED EAST ELEVATION

SHEET NUMBER
A-7

THE INFORMATION CONTAINED IN THIS SET OF CONSTRUCTION DOCUMENTS IS PROPRIETARY BY NATURE. ANY USE OR DISCLOSURE OTHER THAN THAT WHICH RELATES TO CARRIER SERVICES IS STRICTLY PROHIBITED.

EXISTING COAX CONFIGURATION AND SCHEDULE													
SECTOR ALPHA	AZIMUTH	RADCENTER	NUMBER OF ANTENNAS	VENDOR	MODEL	ELEC. TILT	MECH. TILT	RET	TMA	NUMBER OF COAX	COAX #	COAX LENGTH	DIPLEXED
GSM	OMNI	82'-0"	1	AMPHENOL	BCR-80013	–	–	–	–	1	7/8"	110'-0"	YES
UMTS	OMNI	82'-0"	1	AMPHENOL	BCR-80013	–	–	–	–	1	7/8"	110'-0"	NO
UMTS	OMNI	82'-0"	1	AMPHENOL	BCR-80013	–	–	–	–	1	7/8"	110'-0"	NO
MICROWAVE	180°	40'-0"	1	TBD	TBD	–	–	–	–	1	7/8"	80'-0"	–

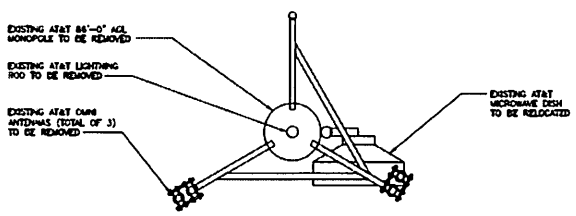

TRUE NORTH

24"x36" SCALE: 3/4" = 1'-0"
11"x17" SCALE: 3/8" = 1'-0"

EXISTING ANTENNA CONFIGURATION | 2

PROPOSED COAX CONFIGURATION AND SCHEDULE														
SECTOR ALPHA	AZIMUTH	RADCENTER	NUMBER OF ANTENNAS	VENDOR	MODEL	ELEC. TILT	MECH. TILT	RET	RRU	COLOR CODE	NUMBER OF COAX	COAX #	COAX LENGTH	DIPLEXED
LTE	0°	85'-0"	1	ANDREW	SBNH-1D6565C	0° –	0°	YES	(2) RRUS-11	RED	FIBER		125'-0"	NO
LTE	0°	85'-0"	1	ANDREW	SBNH-1D6565C	0° –	0°	YES	(2) RRUS-11		FIBER		125'-0"	NO
LTE	0°	75'-0"	1	ANDREW	SBNH-1D6565C	0° –	0°	YES	(2) RRUS-11		FIBER		125'-0"	NO
LTE	0°	75'-0"	1	ANDREW	SBNH-1D6565C	0° –	0°	YES	(2) RRUS-11		FIBER		125'-0"	NO
SECTOR BETA	AZIMUTH	RADCENTER	NUMBER OF ANTENNAS	VENDOR	MODEL	ELEC. TILT	MECH. TILT	RET	RRU	COLOR CODE	NUMBER OF COAX	COAX #	COAX LENGTH	DIPLEXED
LTE	120°	85'-0"	1	ANDREW	SBNH-1D6565C	0° –	2°	YES	(2) RRUS-11	BLUE	FIBER		125'-0"	NO
LTE	120°	85'-0"	1	ANDREW	SBNH-1D6565C	0° –	2°	YES	(2) RRUS-11		FIBER		125'-0"	NO
LTE	120°	75'-0"	1	ANDREW	SBNH-1D6565C	0° –	2°	YES	(2) RRUS-11		FIBER		125'-0"	NO
LTE	120°	75'-0"	1	ANDREW	SBNH-1D6565C	0° –	2°	YES	(2) RRUS-11		FIBER		125'-0"	NO
SECTOR GAMMA	AZIMUTH	RADCENTER	NUMBER OF ANTENNAS	VENDOR	MODEL	ELEC. TILT	MECH. TILT	RET	RRU	COLOR CODE	NUMBER OF COAX	COAX #	COAX LENGTH	DIPLEXED
LTE	240°	85'-0"	1	ANDREW	SBNH-1D6565C	4° –	0°	YES	(2) RRUS-11	GREEN	FIBER		125'-0"	NO
LTE	240°	85'-0"	1	ANDREW	SBNH-1D6565C	4° –	0°	YES	(2) RRUS-11		FIBER		125'-0"	NO
LTE	240°	75'-0"	1	ANDREW	SBNH-1D6565C	4° –	0°	YES	(2) RRUS-11		FIBER		125'-0"	NO
LTE	240°	75'-0"	1	ANDREW	SBNH-1D6565C	4° –	0°	YES	(2) RRUS-11		FIBER		125'-0"	NO
MICROWAVE	180°	40'-0"	1	TBD	TBD	–	–	–	–	–	2	7/8"	125'-0"	–
OMNI	NA	99'-0" TIP HEIGHT	2	AMPHENOL ANTEL	BCR-90013	–	–	–	–	–	1	7/8"	80'-0"	–

NOTES:
* DO NOT USE COAX LENGTHS FOR CUT LENGTHS; ESTIMATES ONLY
* CONFIRM THAT GENERAL CONTRACTOR IS USING LATEST VERSION OF RFDS.

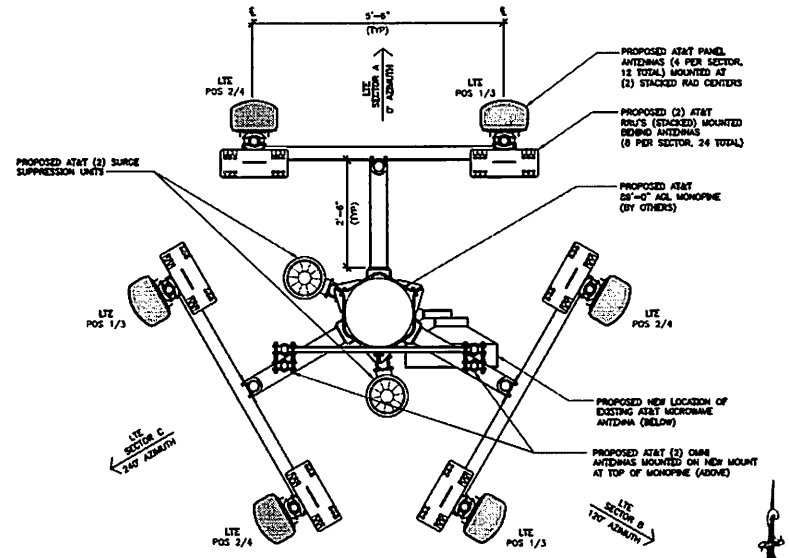

NOTE:
MONOPINE BRANCHES NOT SHOWN FOR CLARITY

TRUE NORTH

24"x36" SCALE: 3/4" = 1'-0"
11"x17" SCALE: 3/8" = 1'-0"

PROPOSED ANTENNA CONFIGURATION | 1

THE INFORMATION CONTAINED IN THIS SET OF CONSTRUCTION DOCUMENTS IS PROPRIETARY BY NATURE. ANY USE OR DISCLOSURE OTHER THAN THAT WHICH RELATES TO CARRIER SERVICES IS STRICTLY PROHIBITED.

at&t
AT&T MOBILITY
12900 PARK PLAZA DR
CERRITOS, CA 90703

WFI
WIRELESS FACILITIES, INC
521 MONTALVO CIRCLE
OXNARD, CA 93030

PTS
PACIFIC TELECOM SERVICES, LLC
31996 AIRPORT LAKE DRIVE
COSTA MESA, CA 92628

LAKE NACIMIENTO
SLG13/CLU1326
4353 INTERLAKE ROAD
BRADLEY, CA 93426

REVISIONS

NO.	DATE	DESCRIPTION	INITIAL
A	06/08/13	ISSUED FOR RCS ZONING	SS
B	06/19/13	ISSUED FOR MCS ZONING	AF
1	08/29/13	ISSUED FOR MCS ZONING	SS

NOT FOR CONSTRUCTION UNLESS LABELED AS CONSTRUCTION SET

SHEET TITLE
ANTENNA CONFIGURATIONS

SHEET NUMBER
RF-1

NOT USED
24"x36" SCALE: NOT TO SCALE
11"x17" SCALE: NOT TO SCALE
6

NOT USED
24"x36" SCALE: NOT TO SCALE
11"x17" SCALE: NOT TO SCALE
5

NOT USED
24"x36" SCALE: NOT TO SCALE
11"x17" SCALE: NOT TO SCALE
4

NOT USED
24"x36" SCALE: NOT TO SCALE
11"x17" SCALE: NOT TO SCALE
3

NOT USED
24"x36" SCALE: NOT TO SCALE
11"x17" SCALE: NOT TO SCALE
2

MANUFACTURER: ANDREW
MODEL: SBNH-1D6565C
WEIGHT: 66.10 LBS
DIMENSIONS: 96.4" X 11.9" X 7.1"
FREQUENCY: REFER TO RF DATA SHEET

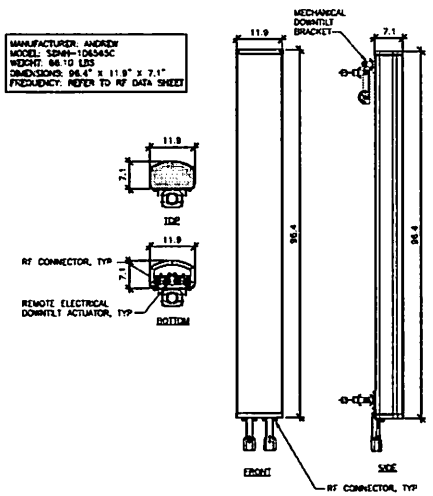

ANTENNA SPECIFICATIONS
24"x36" SCALE: 3/4" = 1'-0"
11"x17" SCALE: 3/8" = 1'-0"
1

THE INFORMATION CONTAINED IN THIS SET OF CONSTRUCTION DOCUMENTS IS PROPRIETARY BY NATURE. ANY USE OR DISCLOSURE OTHER THAN THAT WHICH RELATES TO CARRIER SERVICES IS STRICTLY PROHIBITED.

at&t
AT&T MOBILITY
12900 PARK PLAZA DR
CERRITOS, CA 90703

WFI
WIRELESS FACILITIES, INC
321 BERNOULLI CIRCLE
OXNARD, CA 93030

PTS
PACIFIC TELECOM SERVICES, LLC
3100C AIRPORT LOOP DRIVE
COSTA MESA, CA 92626

LAKE NACIMIENTO
SLG13/CLU1326
4363 INTERLAKE ROAD
BRADLEY, CA 93426

REVISIONS

NO.	DATE	DESCRIPTION	INITIAL
A	06/09/13	ISSUED FOR 90% ZONING	SS
B	06/10/13	ISSUED FOR 90% ZONING	AF
1	06/26/13	ISSUED FOR 100% ZONING	SS

NOT FOR CONSTRUCTION UNLESS LABELED AS CONSTRUCTION SET

SHEET TITLE
ANTENNA DETAILS

SHEET NUMBER
RF-2

TAX AREA CODE NO. 80—033

was 12-033

T. 25 S., R.10E., M.D.M. SEC. 6

MONTEREY COUNTY

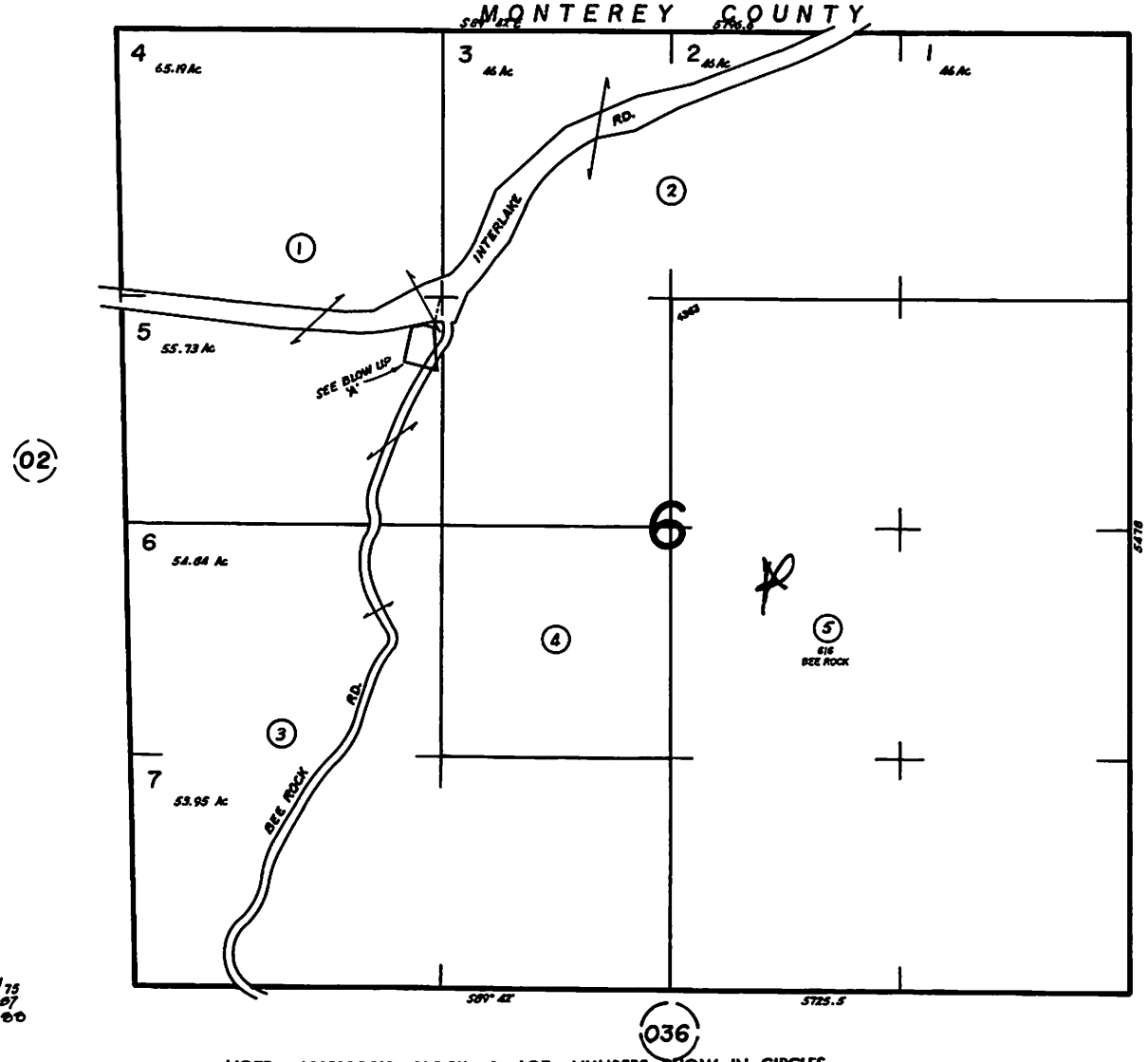

THIS MAP IS PREPARED FOR ASSESSMENT PURPOSES ONLY

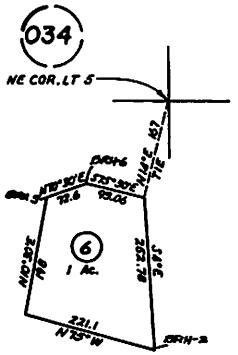

Rev. 6/18/75
12-4-87
7-28-88

NOTE—ASSESSOR'S BLOCK & LOT NUMBERS SHOW IN CIRCLES

SAN LUIS OBISPO COUNTY
CALIFORNIA

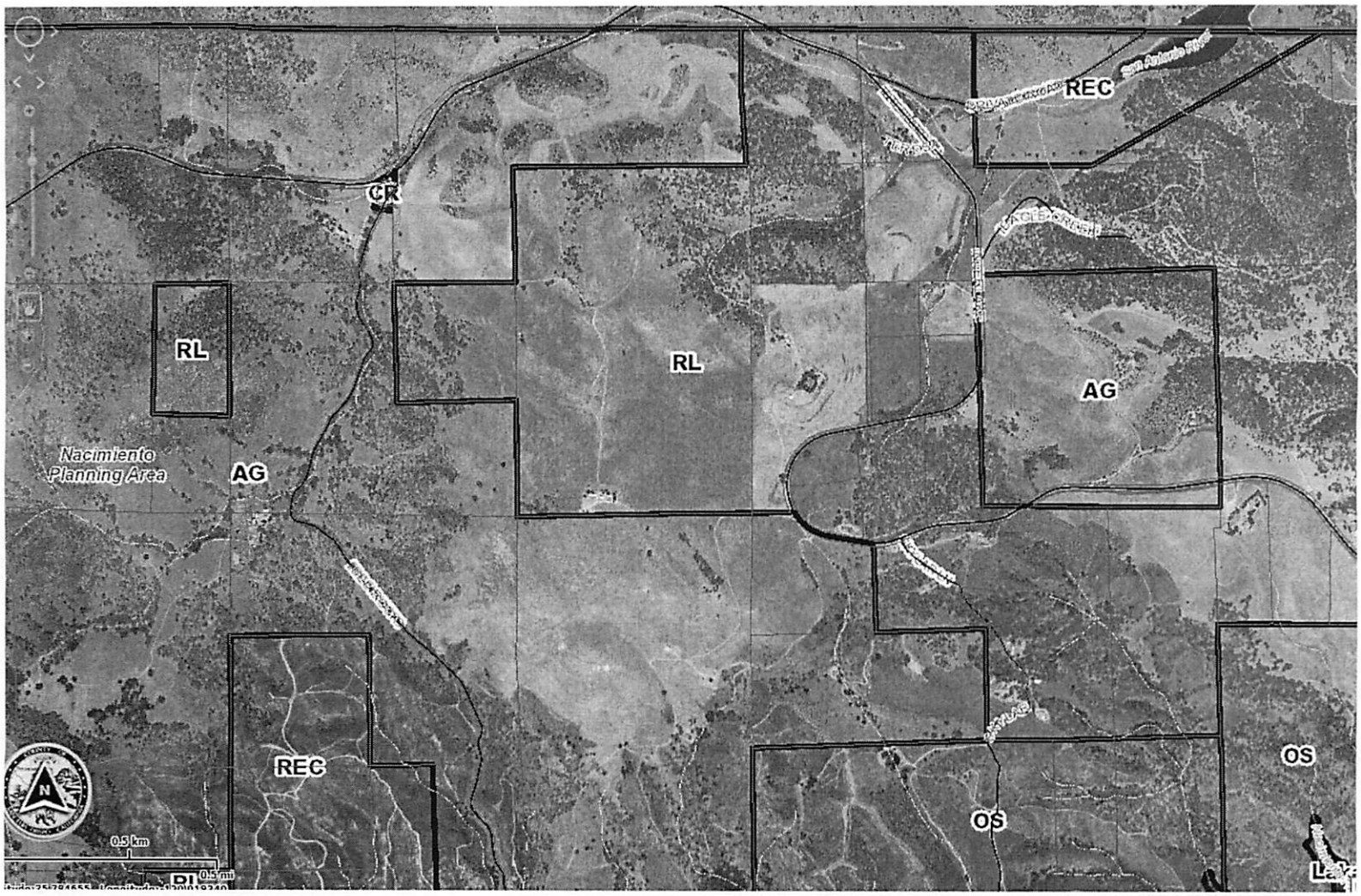
REC
CR
RL
RL
AG
Nacimiento
Planning Area
AG
REC
OS
OS
0.5 km
0.5 mi

Parcel Summary Report For Parcel # 080-033-005

5/23/2013
3:42:44PM

San Luis Obispo County Department of Planning and Building
County Government Center San Luis Obispo, California 93408 Telephone: (805) 781-5600

People Information

Role	Name and Address
OWN	TAYLOR GEORGE E II 4363 INTERLAKE RD BRADLEY CA 93426-6953
OWN	TAYLOR ANDREA
OWN	TAYLOR FAMILY TRUST

Address Information

Status	Address
P	00616 BEE ROCK RD RNACI
P	04363 INTERLAKE RD RNACI

Lot Information:

Tract / Twnshp	Block / Range	Section	Community:	Plan/Area:	Lue 1:	Lue 2:	Lue 3:	Lot:	Flags:	Misc
T25S	R10E	06P	Rural Nacimient	Nacimento	RL			Y		D930113D

Parcel Information

Status	Description
Active	T25S R10E PTN SEC 6

Notes

Tax Districts

SAN MIGUEL
PASO ROBLES JT(27,40) (SB1537)
SAN LUIS OBISPO JT(27,40)
SAN MIGUEL
NO. 01

Parcel Summary Report For Parcel # 080-033-005

San Luis Obispo County Department of Planning and Building
County Government Center San Luis Obispo, California 93408 Telephone: (805) 781-5600

AREA NO. 21

Case Information

Case Number:	Case Status:	
93585	FNL	Primary Parcel
Description: GRADING		
93586	FNL	Primary Parcel
Description: BLDG,FUEL STORAGE,4-ANTENNAS,SAT. DISH,		
98781	FNL	Primary Parcel
Description: CELLULAR TRANSCEIVER FACILITY		
A9868	FNL	Primary Parcel
Description: MONO POLE		
A9869	FNL	Primary Parcel
Description: EQUIPMENT SHELTER AND MONO POLE L.A CITY APPROVED/J.LICHEY,AIA		
C1289	FNL	Primary Parcel
Description: ANTENNAS TO EXISTING TOWER BTS CABINET & ELEC PANEL & PAD		
C7153	FNL	Primary Parcel
Description: REPLACE EXISTING MONO POLE WITH A 20FT SLIM POLE AND MICROWAVE DISH ATTACHMENT		
D930113D	CMP	Primary Parcel
Description: CELLULAR TRANS STATION PROPOSED		
D950044D	CMP	Primary Parcel
Description: CELLULAR SITE-CELLULAR ONE		
D980069D	CMP	Primary Parcel
Description: MONOPOLE		
DRC2004-00231	PTX	Primary Parcel
Description: CELLULAR COMMUNICATION FACILITY (CINGULAR WIRELESS)		

Parcel Summary Report For Parcel # 080-033-005

San Luis Obispo County Department of Planning and Building
County Government Center San Luis Obispo, California 93408 Telephone: (805) 781-5600

DRC2008-00136 APV Primary Parcel

Description:

COMMUNICATIONS FACILITY CONSISTING OF 3 PANEL ANTENNAS CO-LOCATED ON AN EXISTING 85 FEET MONOPINE AND ASSOCIATED GROUND-MOUNTED EQUIPMENT AND UTILITY TRENCHING.

DRC2012-00105 REC Primary Parcel

Description:

89' MONOPINE, 2 NEW OMNI ANTENNAS, 12 NEW PANEL ANTENNAS, 24 RRU'S, 2 SURGE SUPPRESSORS, 1 1900 RADIO KIT, 1 EQUIPMENT RACK AND 1 NEW GPS ANTENNA.

PMT2002-24158 EXP Primary Parcel

Description:

MOVED TO /002

PMT2002-24159 EXP Primary Parcel

Description:

INCLUDED WITH /001

PMT2002-24442 EXP Primary Parcel

Description:

CONST AG EXEMPT BARN

PMT2008-01983 FNL Primary Parcel

Description:

AT&T - REMOVE EXISTING MONOPOLE, INSTALL 80' MONOPINE, 6 PANEL ANTENNAS, 4' RETAINING WALL, RELATED EQUIPMENT & MINOR GRADING FOR EXISTING CELL SITE (DRC2008-00136)

PMT2009-00025 FNL Primary Parcel

Description:

VERIZON WIRELESS - REPLACE EXISTING BACK-UP GENERATOR (60 KW)

PMT2009-00898 FNL Primary Parcel

Description:

METRO PCS - INSTALL 3 ANTENNAS ON NEW MONOPINE (PMT2008-01983), 2 EQUIPMENT CABINETS ON SLAB, & OTHER RELATED EQUIPMENT

PMT2010-00708 EXP Primary Parcel

Description:

EXPIRED - VERIZON - REMOVE 7 EXISTING ANTENNAS FROM MONOPINE POLE & REPLACE WITH 7 NEW ANTENNAS & 6 NEW DIPLEXERS

PMT2012-01968 REC Primary Parcel

Description:

T-MOBILE - INSTALL STUB MOUNT POLE (10' TALL) WITH 4' DIAMETER MICROWAVE DISH AT ESTABLISHED CELL SITE #SV00095A (GET RANCH) (DRC2008-00136)