SAN LUIS OBISPO COUNTY

DEPARTMENT OF PLANNING AND BUILDING

THIS IS A NEW PROJECT REFERRAL

DATE: 10/28/2013

TO: _____

FROM: Ryan Hostetter - North County Team / Development Review

PROJECT DESCRIPTION: DRC2013-00032 HILL – Proposed minor use permit for 1008 solar modules using (including access roads) approximately 3 acres; 17 ft to 19 ft between rows of panels. Site location is 5475 Jack Creek Rd, Templeton. APN: 039-191-035.

Return this letter with your comments attached no later than: 14 days from receipt of this referral. CACs please respond within 60 days. Thank you.

PART 1 - IS THE ATTACHED INFORMATION ADEQUATE TO COMPLETE YOUR REVIEW?

- ☐ YES (Please go on to PART II.)
- ☐ NO (Call me ASAP to discuss what else you need. We have only 10 days in which we must obtain comments from outside agencies.)

PART II - ARE THERE SIGNIFICANT CONCERNS, PROBLEMS OR IMPACTS IN YOUR AREA OF REVIEW?

- ☐ YES (Please describe impacts, along with recommended mitigation measures to reduce the impacts to less-than-significant levels, and attach to this letter)
- ☐ NO (Please go on to PART III)

PART III - INDICATE YOUR RECOMMENDATION FOR FINAL ACTION.

Please attach any conditions of approval you recommend to be incorporated into the project's approval, or state reasons for recommending denial.

IF YOU HAVE "NO COMMENT," PLEASE SO INDICATE, OR CALL.

_____

_____

_____

_____	_____	_____
Date	Name	Phone

COUNTY GOVERNMENT CENTER • SAN LUIS OBISPO • CALIFORNIA 93408 • (805)781-5600

EMAIL: planning @co.slo.ca.us • FAX: (805) 781-1242• WEBSITE: http://www.sloplanning.org

DRC2013-00032 HILL CHARLES W
MINOR USE PERMIT
MUP FOR 1008 SOLAR MODULES USING(INCLUDING ACCESS ROADS)
ADEL/ RADEL
AG

GENERAL APPLICATION FORM

San Luis Obispo County Department of Planning and Building File No _____

APPLICATION TYPE - CHECK ALL THAT APPLY

- ☐ Emergency Permit
- ☐ Tree Permit
- ☐ Plot Plan
- ☐ Zoning Clearance
- ☐ Site Plan
- ✓ Minor Use Permit
- ☐ Variance
- ☐ Other
- ☐ Conditional Use Permit/Development Plan
- ☐ Surface Mining/Reclamation Plan
- ☐ Curb, Gutter & Sidewalk Waiver
- ☐ Modification to approved land use permit

APPLICANT INFORMATION Check box for contact person assigned to this project

☑ Landowner Name Charles Hill Daytime Phone (805) 237-8526
Mailing Address 5475 Jack Creek Rd.,Templeton, CA Zip Code 93465
Email Address: mompophill@wildblue.net

☑ Applicant Name ~~Kara Haugen~~ PETER COUGHLIN, Pristine Sun LLC Daytime Phone ~~(650) 996-6434~~ 415-848-8140
Mailing Address ~~4~~649 Mission St., San Francisco, CA Zip Code 94105
Email Address: kara.haugen@pristinesun.com

☐ Agent Name _____ Daytime Phone _____
Mailing Address _____ Zip Code _____
Email Address: _____

PROPERTY INFORMATION

Total Size of Site: 30.9 acres Assessor Parcel Number(s): 039-191-035
Legal Description: _____
Address of the project (if known): 5475 Jack Creek Rd., Templeton, CA
Directions to the site (including gate codes) - describe first with name of road providing primary access to the site, then nearest roads, landmarks, etc.: Hwy 46 to Jack Creek Rd., immediate left through open gate to 2nd bridge and follow road to end.
Describe current uses, existing structures, and other improvements and vegetation on the property: Fallow Walnut Orchard, >20 years out of production; (1) SFR home, (1) barn, (1) horse shelter

PROPOSED PROJECT

Describe the proposed project (inc. sq. ft. of all buildings): 1008 solar modules using (including access roads) approx. 3 acres; 17'-19' between rows of panels

MUP for Phase II

LEGAL DECLARATION

I, the owner of record of this property, have completed this form accurately and declare that all statements here are true. I do hereby grant official representatives of the county authorization to inspect the subject property.

Property owner signature Charles Hill ← Date 8 MAR 2012

FOR STAFF USE ONLY

Reason for Land Use Permit: _____

LAND USE PERMIT APPLICATION

San Luis Obispo County Department of Planning and Building

File No _____

Type of project: ☐ Commercial ☐ Industrial ☐ Residential ☐ Recreational ☐ Other
☒ Solar Array

Describe any modifications/adjustments from ordinance needed and the reason for the request (if applicable): Additional Conditions Required To Original MUP

Describe existing and future access to the proposed project site:
Current Access Road off SEEs Road off Jack Creek Ri

Surrounding parcel ownership: Do you own adjacent property? ☐ Yes ☒ No
If yes, what is the acreage of all property you own that surrounds the project site? _____

Surrounding land use: What are the uses of the land surrounding your property (when applicable, please specify all agricultural uses):
North: _____ South: _____
East: _____ West: _____

For all projects, answer the following:
Square footage and percentage of the total site (approximately) that will be used for the following:
Buildings: N.A. sq. feet _____% Landscaping: 1200 sq. feet _____%
Paving: N.A. sq. feet _____% Other (specify) 600 L.F. Bushes North Fence Line
Total area of all paving and structures: N.A. ☐ sq. feet ☐ acres
Total area of grading or removal of ground cover: 2.5 ☐ sq. feet ☒ acres Phase II
Number of parking spaces proposed: _____ Height of tallest structure: _____
Number of trees to be removed: _____ Type: _____
Setbacks: Front _____ Right _____ Left _____ Back _____

Proposed water source: ☐ On-site well ☐ Shared well ☐ Other N.A.
☐ Community System - List the agency or company responsible for provision: _____
Do you have a valid will-serve letter? ☐ Yes ☐ No (If yes, please submit copy)

Proposed sewage disposal: ☐ Individual on-site system ☐ Other N.A.
☐ Community System - List the agency or company responsible for sewage disposal: _____
Do you have a valid will-serve letter? ☐ Yes ☐ No (If yes, please submit copy)

Fire Agency: List the agency responsible for fire protection: CAL-Fire

For commercial/industrial projects answer the following:
Total outdoor use area: 4.5 ☐ sq. feet ☒ acres
Total floor area of all structures including upper stories: _____ sq. feet

For residential projects, answer the following:
Number of residential units: 0 Number of bedrooms per unit: 0
Total floor area of all structures including upper stories, but not garages and carports: _____
Total of area of the lot(s) minus building footprint and parking spaces: _____

ENVIRONMENTAL DESCRIPTION FORM

San Luis Obispo County Department of Planning and Building File No _____

The California Environmental Quality Act (CEQA) requires all state and local agencies to consider and mitigate environmental impacts for their own actions and when permitting private projects. The Act also requires that an environmental impact report (EIR) be prepared for all actions that may significantly affect the quality of the environment. The information you provide on this form will help the Department of Planning and Building determine whether or not your project will significantly affect the quality of the environment.

To ensure that your environmental review is completed as quickly as possible, please remember to:

a. Answer **ALL** of the questions as accurately and completely as possible.
b. Include any additional information or explanations where you believe it would be helpful or where required. Include additional pages if needed.
c. If you are requesting a land division or a re-zoning, be sure to include complete information about future development that may result from the proposed land division or rezoning.
d. Include references to any reports or studies you are aware of that might be relevant to the questions asked or the answers you provide.

Should a determination be made that the information is inaccurate or insufficient, you will be required to submit additional information upon request.

Physical Site Characteristic Information

Your site plan will also need to show the information requested here:

1. Describe the topography of the site:
   Level to gently rolling, 0-10% slopes: 15 acres
   Moderate slopes of 10-30%: 15 acres
   Steep slopes over 30%: _____ acres
2. Are there any springs, streams, lakes or marshes on or near the site? ☒ Yes ☐ No
   If yes, please describe: Stream to the East of parcel, ~.025 miles
3. Are there any flooding problems on the site or in the surrounding area? ☐ Yes ☒ No
   If yes, please describe: _____
4. Has a drainage plan been prepared? ☐ Yes ☒ No
   If yes, please include with application.
5. Has there been any grading or earthwork on the project site? ☐ Yes ☒ No
   If yes, please explain: _____
6. Has a grading plan been prepared? ☐ Yes ☒ No
   If yes, please include with application.
7. Are there any sewer ponds/waste disposal sites on/adjacent to the project? ☐ Yes ☒ No
8. Is a railroad or highway within 300 feet of your project site? ☐ Yes ☒ No
9. Can the proposed project be seen from surrounding public roads? ☐ Yes ☒ No
   If yes, please list: _____

Water Supply Information

1. What type of water supply is proposed?
   ☐ Individual well ☐ Shared well ☐ Community water system
2. What is the proposed use of the water?
   ☐ Residential ☐ Agricultural - Explain _____
   ☐ Commercial/Office - Explain _____
   ☐ Industrial – Explain _____
3. What is the expected daily water demand associated with the project? 0 gallons
4. How many service connections will be required? 1
5. Do operable water facilities exist on the site?
   ☐ Yes ☒ No If yes, please describe: _____
6. Has there been a sustained yield test on proposed or existing wells?
   ☐ Yes ☒ No If yes, please attach.
7. Does water meet the Health Agency's quality requirements?

Bacteriological?	☐ Yes	☐ No
Chemical?	☐ Yes	☐ No
Physical	☐ Yes	☐ No
Water analysis report submitted?	☐ Yes	☐ No

8. Please check if any of the following have been completed on the subject property and/or submitted to County Environmental Health.
   ☐ Well Driller's Letter ☐ Water Quality Analysis ☐ OK or ☐ Problems
   ☐ Will Serve Letter ☐ Pump Test _____ Hours_____G.P.M.
   ☐ Surrounding Well Logs ☐ Hydrologic Study ☐ Other _____

Please attach any letters or documents to verify that water is available for the proposed project.

Sewage Disposal Information

If an on-site (individual) subsurface sewage disposal system will be used:

1. Has an engineered percolation test been accomplished?
   ☐ Yes ☐ No If yes, please attach a copy.
2. What is the distance from proposed leach field to any neighboring water wells? _____ feet
3. Will subsurface drainage result in the possibility of effluent reappearing in surface water or on adjacent lands, due to steep slopes, impervious soil layers or other existing conditions?
   ☐ Yes ☐ No
4. Has a piezometer test been completed?
   ☐ Yes ☐ No
5. Will a Waste Discharge Permit from the Regional Water Quality Control Board be required?
   ☐ Yes ☐ No *(a waste discharge permit is typically needed when you exceed 2,500 gallons per day)*

If a community sewage disposal system is to be used:

1. Is this project to be connected to an existing sewer line? ☐ Yes ☐ No
   Distance to nearest sewer line: _____ Location of connection: _____
2. What is the amount of proposed flow? _____ G.P.D.
3. Does the existing collection treatment and disposal system have adequate additional capacity to accept the proposed flow? ☐ Yes ☐ No

Solid Waste Information

1. What type of solid waste will be generated by the project?
   ☐ Domestic ☒ Industrial ☐ Agricultural ☐ Other, please explain? leftover materials-to be recycled
2. Name of Solid Waste Disposal Company: _____
3. Where is the waste disposal storage in relation to buildings? _____
4. Does your project design include an area for collecting recyclable materials and/or composting materials? ☐ Yes ☐ No

Community Service Information

1. Name of School District: _____
2. Location of nearest police station: _____
3. Location of nearest fire station: _____
4. Location of nearest public transit stop: _____
5. Are services (grocery/other shopping) within walking distance of the project? ☐ Yes ☒ No
   If yes, what is the distance? _____ feet/miles

Historic and Archeological Information

1. Please describe the historic use of the property:
   Was a walnut orchard > 20 years ago.
2. Are you aware of the presence of any historic, cultural or archaeological materials on the project site or in the vicinity? ☐ Yes ☒ No
   If yes, please describe: _____
3. Has an archaeological surface survey been done for the project site? ☐ Yes ☒ No
   If yes, please include two copies of the report with the application.

Commercial/Industrial Project Information

Only complete this section if you are proposing a commercial or industrial project or zoning change.

1. Days of Operation: _____ Hours of Operation: _____
2. How many people will this project employ? 20, various types throughout construction
3. Will employees work in shifts? ☐ Yes ☐ No
   If yes, please identify the shift times and number of employees for each shift _____
   (2) Two employees for O&M, one day, twice a year
4. Will this project produce any emissions (i.e., gasses, smoke, dust, odors, fumes, vapors)?
   ☐ Yes ☒ No If yes, please explain: _____
5. Will this project increase the noise level in the immediate vicinity? ☐ Yes ☒ No
   If yes, please explain: _____
   (If loud equipment is proposed, please submit manufacturers estimate on noise output.)
6. What type of industrial waste materials will result from the project? Explain in detail: _____
   leftover conduit, i-beams or conductor pieces. all to be recycled
7. Will hazardous products be used or stored on-site? ☐ Yes ☒ No
   If yes, please describe in detail: _____
8. Has a traffic study been prepared? ☐ Yes ☒ No If yes, please attach a copy.

9. Please estimate the number of employees, customers and other project-related traffic trips to or from the project: Between 7:00 - 9:00 a.m. 4 Between 4:00 to 6:00 p.m. 4
10. Are you proposing any special measures (carpooling, public transit, telecommuting) to reduce automobile trips by employees ☒ Yes ☐ No Only needed during construction
    If yes, please specify what you are proposing: _____
11. Are you aware of any potentially problematic roadway conditions that may exist or result from the proposed project, such as poor sight distance at access points, connecting with the public road?
    ☐ Yes ☒ No If yes, please describe: _____

Agricultural Information

Only complete this section if your site is: 1) Within the Agricultural land use category, or 2) currently in agricultural production.

1. Is the site currently in Agricultural Preserve (Williamson Act)? ☐ Yes ☒ No
2. If yes, is the site currently under land conservation contract? ☐ Yes ☐ No
3. If your land is currently vacant or in agricultural production, are there any restrictions on the crop productivity of the land? That is, are there any reasons (i.e., poor soil, steep slopes) the land cannot support a profitable agricultural crop? Please explain in detail: The landowner tried to maintain the walnut orchard when he bought the property 14 years ago. He lost money and does not want to use the land for crops

Special Project Information

1. Describe any amenities included in the project, such as park areas, open spaces, common recreation facilities, etc.(these also need to be shown on your site plan): _____
2. Will the development occur in phases? ☐ Yes ☒ No
   If yes describe: _____
3. Do you have any plans for future additions, expansion or further activity related to or connected with this proposal? ☒ Yes ☐ No If yes, explain: project area was too small for the accepted PG&E PPA agreement-we didn't want to cut down oak trees. We may apply for a CUP for a neighboring parcel
4. Are there any proposed or existing deed restrictions? ☐ Yes ☒ No
   If yes, please describe: _____

Energy Conservation Information

1. Describe any special energy conservation measures or building materials that will be incorporated into your project *: low emission vehicles used when available; no chemicals or other contaminants

   *The county's Building Energy Efficient Structures (BEES) program can reduce your construction permit fees. Your building must exceed the California State Energy Standards (Title 24) in order to qualify for this program. If you are interested in more information, please contact the Building Services Division of the Department of Planning and Building at (805) 781-5600.

Environmental Information

1. List any mitigation measures that you propose to lessen the impacts associated with your project:
   Will provide vegetative screening around the arrays; may use alternate Ag use in conjuction with PV system, i.e. bee boxes or sheep grazing between rows.

2. Are you aware of any unique, rare or endangered species (vegetation or wildlife) associated with the project site? ☐ Yes ☒ No
   If yes, please list: _____
3. Are you aware of any previous environmental determinations for all or portions of this property?
   ☐ Yes ☒ No
   If yes, please describe and provide "ED" number(s): _____

Other Related Permits

1. List all permits, licenses or government approvals that will be required for your project (federal, state and local): Building permit,possible road permit (WDID)

   (If you are unsure if additional permits are required from other agencies, please ask a member of the Planning Department staff currently assigned in either Current Planning or the Environmental Division.)

PHOTOVOLTAIC SYSTEM - 2103 - HILL
5475 JACK CREEK RD., TEMPLETON, CA 93465

Vicinity Map:

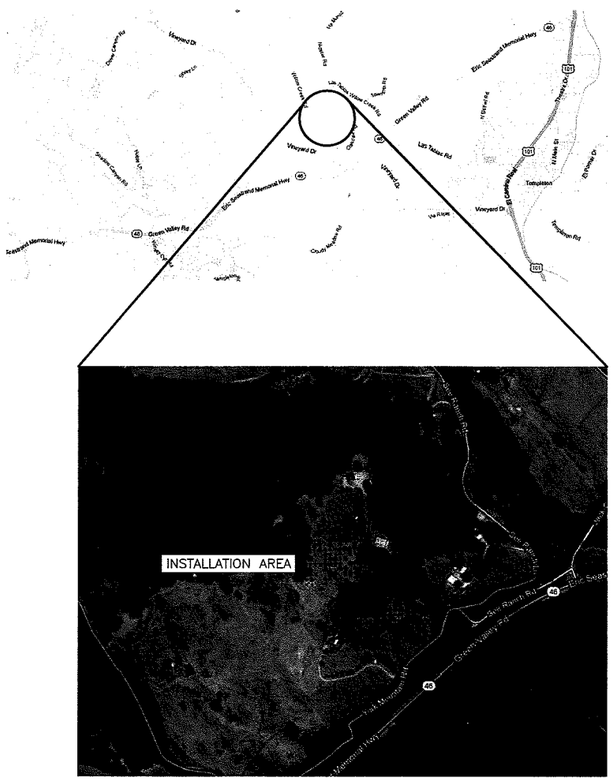

Contact Info:

Owner
Pristine Sun Fund 8, LLC
649 Mission Street, 5th Floor
San Francisco, CA 94105

General Contractor
Progressive Power Group, Inc.
12601 Monarch Street
Garden Grove, CA 92841
CSLB #928459 B, C10

Electrical Engineer
Natron Resources
958 Bayview Ave.
Oakland, CA 94610

Civil Engineer
Dominick's
406 Pine Street Rd
Red Bluff, CA 96080

Structural Engineer
Kleinfelder
611 Corporate Circle Suite C
Golden, CO 80401

Geotechnical
Kleinfelder
611 Corporate Circle Suite C
Golden, CO 80401
San Jose, CA 95112

N

Table of Contents:

T - TITLE SHEET
A.1.1 - SITE PLAN
A.2.1 - ARRAY PLAN
A.3.1 - TRACKER ELEVATION
A.3.2 - TRACKER ELEVATION W/ FENCE
E.0.1 - ELECTRICAL NOTES
E.1.1 - ELECTRICAL SITE PLAN
E.2.1 - SINGLE LINE DIAGRAM (PHASE 1)
E.2.2 - SINGLE LINE DIAGRAM (PHASE 2)
E.3.1 - THREE LINE DIAGRAM (PHASE 1)
E.3.2 - THREE LINE DIAGRAM (PHASE 2)
E.3.3 - THREE LINE DIAGRAM-3
E.4.1 - WIRING SCHEDULE
E.5.1 - EQUIPMENT LAYOUT PLAN
E.5.2 - EQUIPMENT LAYOUT PLAN (GROUNDING DETAIL)
E.6.1 - ELECTRICAL DETAILS - 1
E.6.2 - ELECTRICAL DETAILS - 2
E.7.1 - SPEC SHEETS -1
E.7.2 - SPEC SHEETS -2
E.8.1 - LABELS & MARKINGS-1
E.8.2 - LABELS & MARKINGS-2
E.9.1 - POLE LINE PLAN VIEW
E.9.2 - POLE LINE PROFILE VIEW
E.9.3 - POLE 2 METERING DETAILS - SHEET 1
E.9.4 - POLE 2 METERING DETAILS - SHEET 2
E.9.5 - POLES 1 & 4 SWITCH DETAILS - SHEET 1
E.9.6 - POLES 1 & 4 SWITCH DETAILS - SHEET 2
E.9.7 - POLE 3 RECLOSER DETAILS
E.9.8 - POLE 4 RISER DETAILS
10150-901 - 101502103 HILL
10150-901 - 10150 TYPICAL FOUNDATION LAYOUT
10150-901 - 10150 TYPICAL FOUNDATION LAYOUT
10150-901 - 10150 TYPICALTORQUE TUBE LAYOUT
10150-901 - 10150 TYPICALTORQUE TUBE LAYOUT
10150-901 - DURATRACK HZ, 22" CLAMP, 60MODULE, 13 BOLTED COLUMNS,206.6',PROJECT 10150
10150-901 - DURATRACK HZ PROJECT: 10151
10150-901 - INSTALLATION ITEMS, PROJECT 10150
10150-901 - DURATRACK HZ, PROJECT 10150
10146-903 - FIELD ASSEMBLY,DTHZ DRIVELINE,HDG ROUND, F1136HW,56" THRU 315"
20013-901 - ASSEMBLY, CLAMP, 4 BOLT, (LENGTH)"
20035-901 - FIELD ASSEMBLY, COLUMN, LINKED SLEWING GEARBOX, I-BEAM
20055-901 - FIELD ASSEMBLY, COLUMN, MOTORIZED SLEWING GEARBOX 480V, I-BEAM W6
20151-901 - FIELD ASSEMBLY, 3 HOLE 1.625, 10GA 102270, 4"X4"X76'-116'
20153-901 - ASSEMBLY, SITE DATA CONTROLLER, 100-240V, W/ETHERNET
20154-901 - ASSEMBLY, 4X MOTOR CONTROLLER, 100-240V, W/ETHERNET
20213-000 - ASSEMBLY, RIGID WIND STOW AND GPS
25001-901 - KIT, BUSHING HOUSING
25002-901 - KIT, BUSHING HOUSING BRACKET, -593,W6-7/8.5
25007-901 - KIT, DAMPER, STANDARD
25007-901 - KIT, DAMPER, STANDARD
30060-901 - TUBE, 4" SQUARE, 11GA, A500C, SR MTG 1.625, STR, FLO COAT, 12" TO 492"

System Specifications:

Panel model	Renesola JC 300M-24/Ab
Number of panels	2,256
System power, kW	676.8
Array square footage	47,741.1
Array weight (lbs)	129,314.3
Applicable Code	CEC 2010, CBC 2010
Construction Type	Commercial
ASHRAE Station	Paso RoblesMunicipal ARP
ASHRAE 2% High Design Temp. DB	39
ASHRAE Min Mean Extreme Annual DB	-6

Panel model	Hanwha SF260-P290
Number of panels	1,104
System power, kW	320.2
Array square footage	23,362.7
Array weight (lbs)	63,281.5
Applicable Code	CEC 2010, CBC 2010
Construction Type	Commercial
ASHRAE Station	Paso RoblesMunicipal ARP
ASHRAE 2% High Design Temp. DB	39
ASHRAE Min Mean Extreme Annual DB	-6

SCOPE OF WORK:

SCOPE INCLUDES INSTALLATION OF PHOTOVOLTAIC ARRAYS ON GROUND MOUNT STRUCTURES WITH RELATED HARDWARE AND ELECTRICAL EQUIPMENT.

SYSTEM ELECTRICAL CONNECTION TO MAIN ELECTRICAL SERVICE IS AT 12.47KV SWITCHGEAR.

PERMIT SHALL INCLUDE LABOR OF CONSTRUCTING ARRAYS, RUNNING OF ELECTRICAL CONDUITS, INSTALLATION OF NEW ELECTRICAL EQUIPMENT AND ELECTRICAL CONNECTION TO UTILITY POLE.

NO BATTERIES REQUIRED AS PART OF THIS PROJECT SCOPE.

DRC2013-00032 **HILL CHARLES W**

MINOR USE PERMIT

MUP FOR 1008 SOLAR MODULES USING(INCLUDING ACCESS ROADS) ADEL/ RADEL

AG

PROJECT TITLE:
2103-HILL
5475 JACK CREEK RD.
TEMPLETON, CA 93465
APN: 039-191-03-5

ENGINEER'S STAMP
REGISTERED PROFESSIONAL ENGINEER
JEFFREY H. ANDERSON
Lic. No. 15486
Exp. 06/30/2015
Electrical Engineer
STATE OF CALIFORNIA

Pristine Sun
PRISTINE SUN, LLC
649 Mission Street, 5th Floor,
San Francisco, CA 94105
JOB NUMBER: 10210

REVISIONS

#	DATE	ISSUE
A	22-MAY-13	FOR SUBMITTAL
B	27-JUN-13	AHJ COMMENTS
C	02-AUG-13	FOR RESUBMITTAL
D	21-OCT-13	PHASE 2- UPDATE

DRAWN BY:	NATRON
CHECKED BY:	JHA
APPROVED BY:	JHA
DOCUMENT DATE:	10/17/2013

SCALE: NTS

SHEET TITLE: TITLE SHEET

SHEET #: T

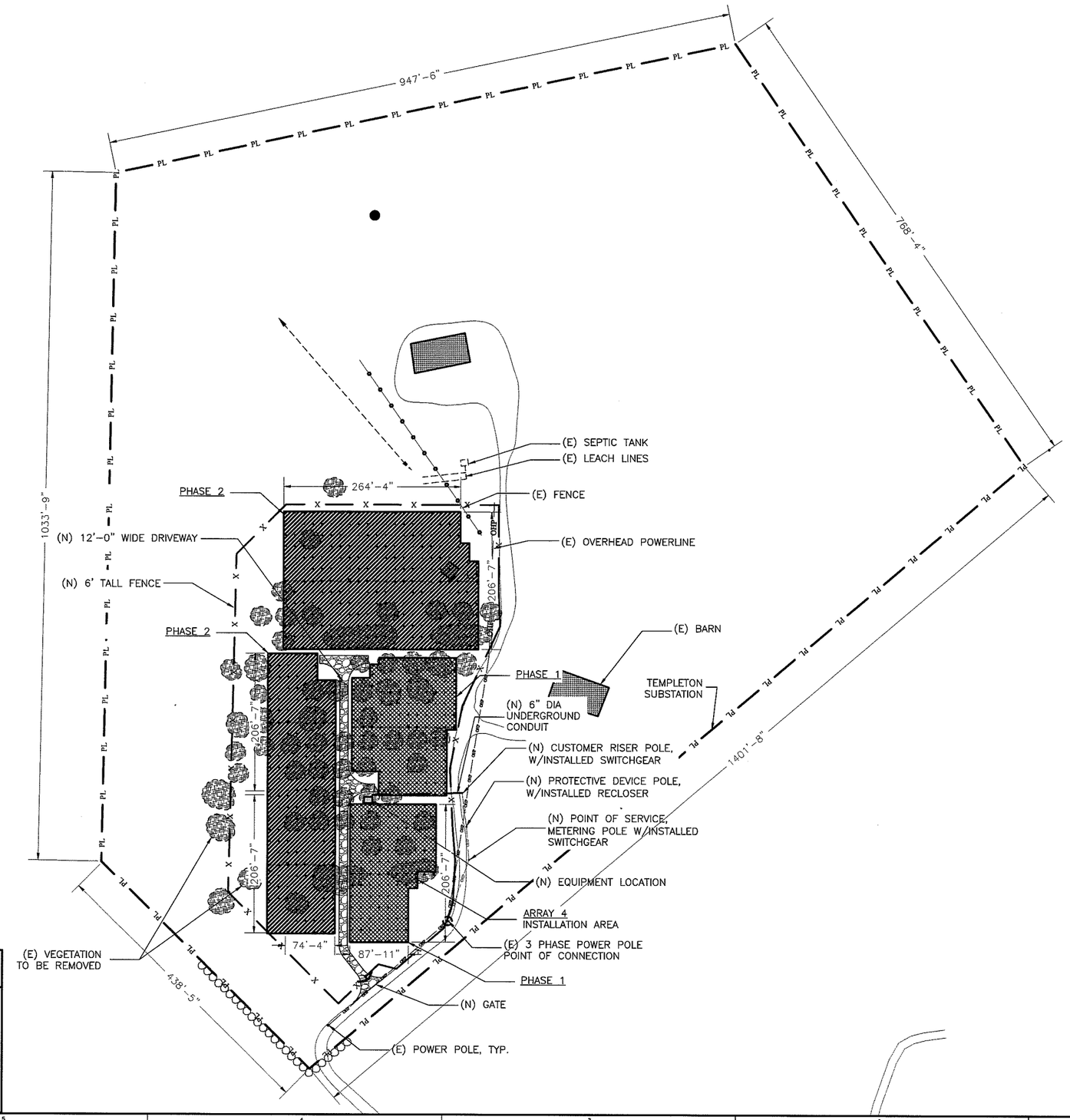

NOTES:
1. ALL SITE MEASUREMENTS ARE APPROXIMATE & SHALL BE FIELD VERIFIED.

SYSTEM INFO:

SYSTEM SIZE	: 996.9KWSTC ; 750KWAC
PANEL USED	: (2,256) RENESOLA JC300M-24/Ab (300W)
	: (1,104) HANWHA SF260-P290 (290W)
STRING PROPERTIES(HANWHA)	: 12 IN SERIES, 589.6V VOC MAX, 8.5A ISC
STRING PROPERTIES(RENESOLA)	: 12 IN SERIES, 587.6V VOC MAX, 8.69A ISC
STRINGS	: 280
TYPE OF INVERTER	: (1) AE SOLARON 500NX-HE (500KW)
	: (1) AE SOLARON 250NX (250KW)

PROJECT TITLE:

2103-HILL
5475 JACK CREEK RD.
TEMPLETON, CA 93465
APN: 039-191-03-5

ENGINEER'S STAMP

Pristine Sun
PRISTINE SUN, LLC
649 Mission Street, 5th Floor,
San Francisco, CA 94105
JOB NUMBER: 10210

REVISIONS

#	DATE	ISSUE
A	22-MAY-13	FOR SUBMITTAL
B	27-JUN-13	HAU COMMENTS
C	02-AUG-13	FOR RESUBMITTAL
D	21-OCT-13	PHASE 2- UPDATE

DRAWN BY: NATRON
CHECKED BY: JHA
APPROVED BY: JHA
DOCUMENT DATE: 10/17/2013

SCALE: 1"=80'-0"

SHEET TITLE: SITE PLAN

SHEET #: A.1.1

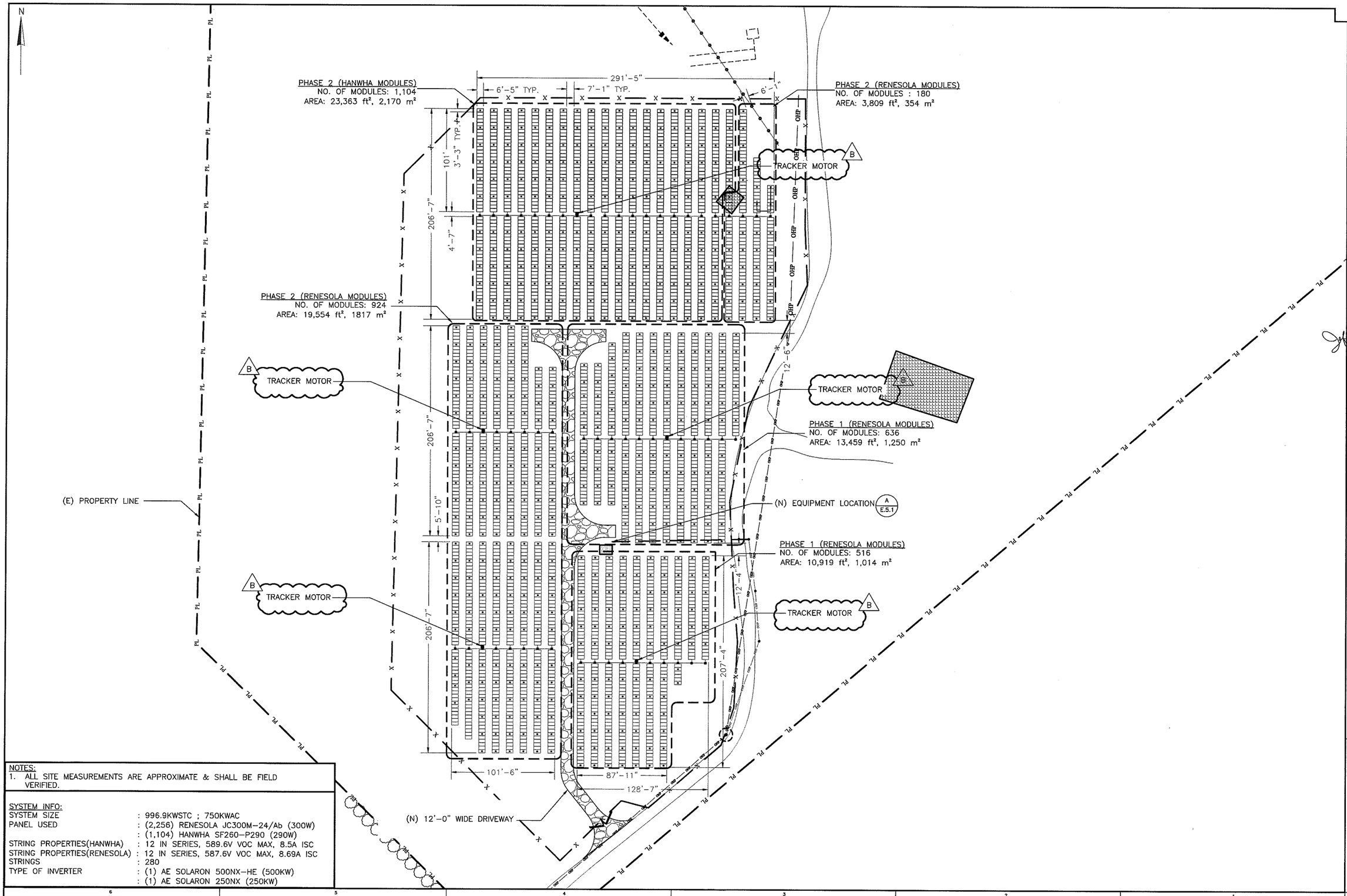

NOTES:
1. ALL SITE MEASUREMENTS ARE APPROXIMATE & SHALL BE FIELD VERIFIED.

SYSTEM INFO:

SYSTEM SIZE	: 996.9KWSTC ; 750KWAC
PANEL USED	: (2,256) RENESOLA JC300M-24/Ab (300W)
	: (1,104) HANWHA SF260-P290 (290W)
STRING PROPERTIES(HANWHA)	: 12 IN SERIES, 589.6V VOC MAX, 8.5A ISC
STRING PROPERTIES(RENESOLA)	: 12 IN SERIES, 587.6V VOC MAX, 8.69A ISC
STRINGS	: 280
TYPE OF INVERTER	: (1) AE SOLARON 500NX-HE (500KW)
	: (1) AE SOLARON 250NX (250KW)

PROJECT TITLE:

2103-HILL
5475 JACK CREEK RD.
TEMPLETON, CA 93465
APN: 039-191-03-5

ENGINEER'S STAMP

REGISTERED PROFESSIONAL ENGINEER
JEFFREY T. ANDERSON
C 10 No. 18438
Exp. 06/30/2015
Electrical Engineer
STATE OF CALIFORNIA

Pristine Sun
PRISTINE SUN, LLC
649 Mission Street, 5th Floor,
San Francisco, CA 94105
JOB NUMBER: 10210

REVISIONS

#	DATE	ISSUE
A	22-MAY-13	FOR SUBMITTAL
B	27-JUN-13	AHJ COMMENTS
C	02-AUG-13	FOR RESUBMITTAL
D	21-OCT-13	PHASE 2- UPDATE

DRAWN BY:	NATRON
CHECKED BY:	JHA
APPROVED BY:	JHA
DOCUMENT DATE:	10/17/2013

SCALE: 1"=40'-0"

SHEET TITLE: ARRAY PLAN

SHEET #: A.2.1

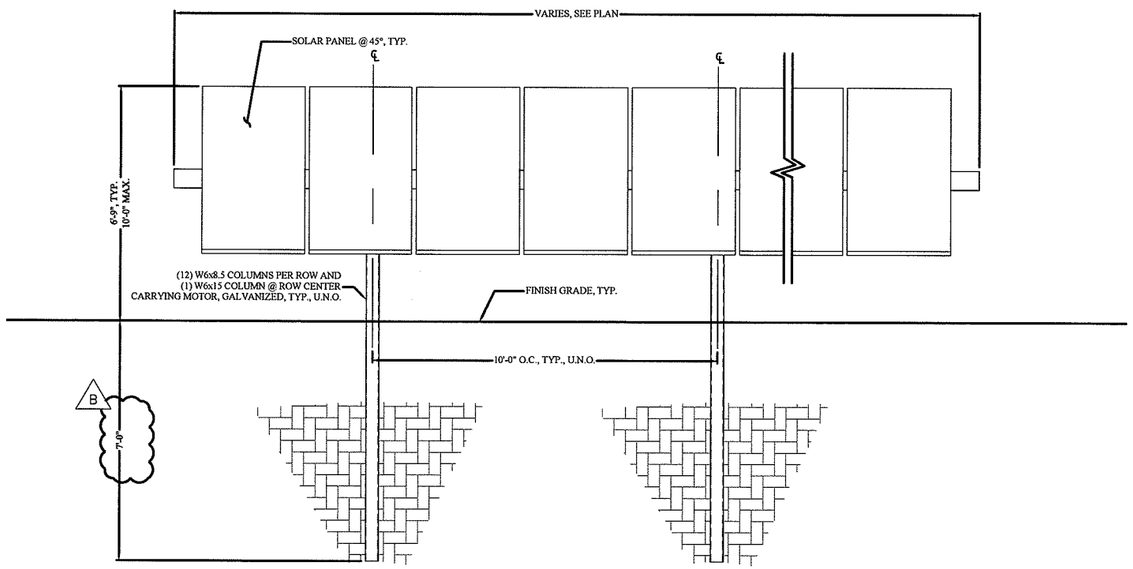

A EAST OR WEST TRACKER ELEVATION (TYP.)
SCALE: 1/2"=1'-0"

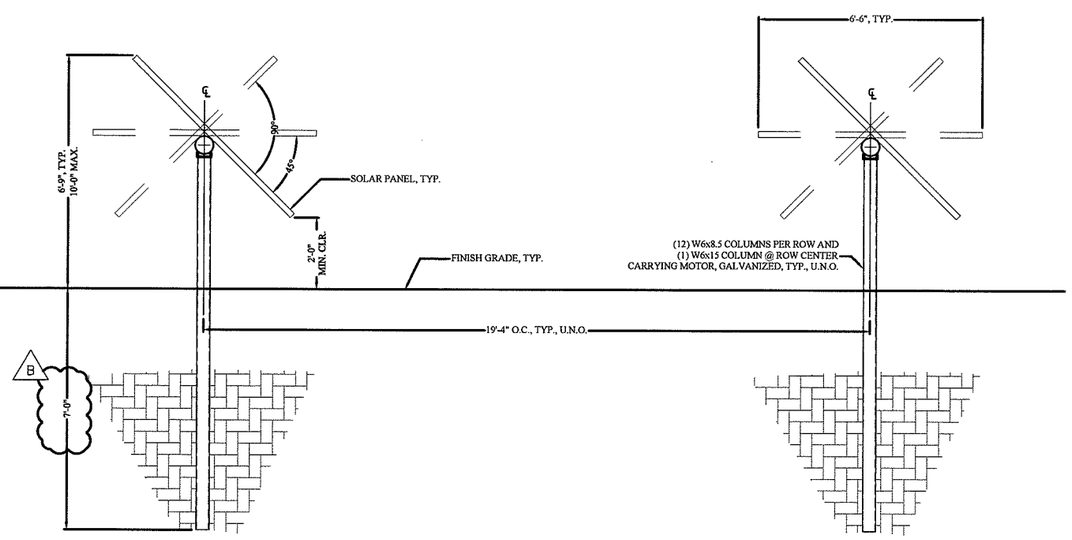

B NORTH OR SOUTH TRACKER ELEVATION (TYP.)
SCALE: 1/2"=1'-0"

PROJECT TITLE:

2103-HILL
5475 JACK CREEK RD.
TEMPLETON, CA 93465
APN: 039-191-03-5

ENGINEER'S STAMP

REGISTERED PROFESSIONAL ENGINEER
JEFFREY T. ANDERSON
C.E. No. 18486
Exp: 06/30/2015
Civil
STATE OF CALIFORNIA

Pristine Sun
PRISTINE SUN, LLC
649 Mission Street, 5th Floor,
San Francisco, CA 94105
JOB NUMBER: 10210

#	DATE	ISSUE
A	22-MAY-13	FOR SUBMITTAL
B	27-JUN-13	AHJ COMMENTS
C	02-AUG-13	FOR RESUBMITTAL
D	21-OCT-13	PHASE 2- UPDATE

REVISIONS

DRAWN BY:	NATRON
CHECKED BY:	JHA
APPROVED BY:	JHA
DOCUMENT DATE:	10/17/2013

SCALE:
1/2"=1'-0"

SHEET TITLE:
TRACKER ELEVATION

SHEET #:
A.3.1

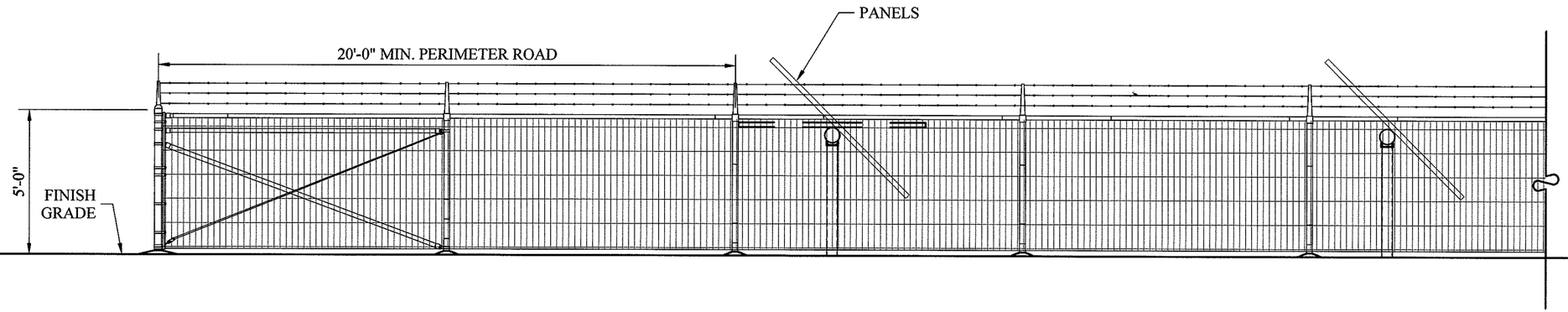

A NORTH OR SOUTH TRACKER ELEVATION W/ FENCE (TYP.)
SCALE: 1/2"=1'-0"

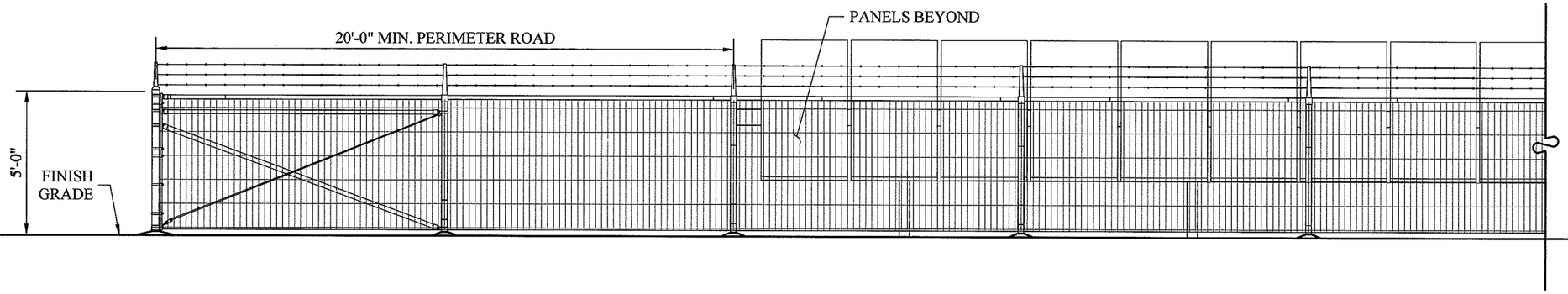

B EAST OR WEST TRACKER ELEVATION W/ FENCE (TYP.)
SCALE: 1/2"=1'-0"

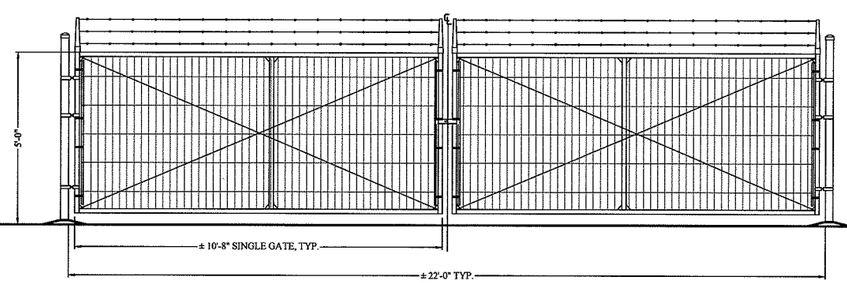

C FENCE GATE ELEVATION (TYP.)
SCALE: 1/2"=1'-0"

PROJECT TITLE:

2103-HILL
5475 JACK CREEK RD.
TEMPLETON, CA 93465
APN: 039-191-03-5

ENGINEER'S STAMP

REGISTERED PROFESSIONAL ENGINEER
JEFFREY H. ANDERSON
Lic. No. 18686
Exp. 06/30/2015
Electrical Engineer
STATE OF CALIFORNIA

Pristine Sun
PRISTINE SUN, LLC
649 Mission Street, 5th Floor,
San Francisco, CA 94105
JOB NUMBER: 10210

REVISIONS

#	DATE	ISSUE
A	22-MAY-13	FOR SUBMITTAL
B	22-JUN-13	AHJ COMMENTS
C	02-AUG-13	FOR RESUBMITTAL
D	21-OCT-13	PHASE 2- UPDATE

DRAWN BY:	NATRON
CHECKED BY:	JHA
APPROVED BY:	JHA
DOCUMENT DATE: 10/17/2013	

SCALE:
1/2"=1'-0"

SHEET TITLE:
TRACKER ELEVATION W/FENCE

SHEET #:
A.3.2

GENERAL ELECTRICAL NOTES FOR NEW PHOTOVOLTAIC SYSTEM

1. THIS PROPOSED SOLAR ELECTRIC SYSTEM IS INTENDED TO OPERATE IN PARALLEL WITH POWER RECEIVED FROM THE UTILITY SERVICE PROVIDER.

2. THE INVERTER FOR THE PROPOSED SOLAR ELECTRIC SYSTEM SHALL BE IDENTIFIED FOR USE IN SOLAR PHOTOVOLTAIC SYSTEMS. ALL EQUIPMENT SHALL BE UL 1741 APPROVED.

3. THIS SYSTEM IS INTENDED TO CONNECT TO THE EXISTING FACILITY'S POWER SYSTEM AT ONE POINT, POINT OF COMMON COUPLING (POCC). THIS CONNECTION SHALL BE IN COMPLIANCE WITH THE NEC ARTICLE 690.64 "POINT OF CONNECTION".

4. ALL SOURCE CIRCUITS SHALL HAVE INDIVIDUAL SOURCE CIRCUIT PROTECTION FOR TESTING AND ISOLATION. ALL COMBINER BOXES SHALL HAVE DISCONNECTION MEANS NEAR THE COMBINER FOR ISOLATION AND TESTING.

5. ALL DISCONNECTS AND COMBINERS SHALL BE SECURED FROM UNAUTHORIZED/UNQUALIFIED PERSONNEL BY LOCK OR LOCATION.

6. ALL DISCONNECTS, COMBINERS, PULL/SPLICE BOXES AND ENCLOSURES SHALL BE LISTED FOR ITS PURPOSE.

7. EQUIPMENT SHALL BE INSTALLED IN A SECURE AREA. INVERTER PERFORMANCE MAY BE AFFECTED IF INSTALLED IN DIRECT SUNLIGHT.

8. ALL PARTS SPECIFIED IN THESE DRAWINGS MAY BE REPLACED BY EQUIVALENT PARTS FROM ANOTHER MANUFACTURER.

WIRING AND WIRING METHODS

ALL WIRING METHODS AND INSTALLATION PRACTICES SHALL CONFORM TO THE NATIONAL ELECTRIC CODE, LOCAL STATE CODES, AND OTHER APPLICABLE LOCAL CODES.

1. EXPOSED PV SOLAR PANEL WIRING WILL BE PV WIRE, 90 DEGREE C, WET RATED. ALL EXPOSED CABLES, SUCH AS MODULE LEADS SHALL BE SECURED WITH MECHANICAL OR OTHER SUNLIGHT RESISTANT MEANS.

2. ALL GROUNDED CONDUCTORS SHALL BE WHITE AND EQUIPMENT GROUNDING CONDUCTORS SHALL BE GREEN OR BARE. (NEC 200.6)

3. ALL FIELD WIRING LARGER THAN 6 AWG THAT IS NOT COLOR CODED SHALL BE TAGGED AT BOTH ENDS WITH PERMANENT WIRE MAKERS, IDENTIFYING POLARITY AND GROUND.

4. FITTINGS FOR EXTERIOR RUNS OF EMT SHALL BE RAIN-TIGHT COMPRESSION TYPE.

5. LIQUID TIGHT FLEXIBLE METAL CONDUIT IS GENERALLY SUITABLE FOR INSTALLATION IN WET AND DRY LOCATIONS. SHOULD IT BE EMPLOYED, SUPPORTS WILL BE NO GREATER THAN 12 INCHES FROM BOXES (JUNCTION BOX, CABINETS OR CONDUIT FITTINGS) AND NO GREATER THAN 36 INCHES APART (NEC 351).

6. LIQUID TIGHT FLEXIBLE NON-METALLIC CONDUIT IS GENERALLY SUITABLE FOR INSTALLATION IN WET AND DRY LOCATIONS. SHOULD IT BE EMPLOYED, SUPPORTS WILL BE NO GREATER THAN 12 INCHES FROM BOXES (JUNCTION BOX, CABINETS OR CONDUIT FITTINGS) AND NO MORE THAN 36 INCHES APART (NEC 351).

7. UNLESS MARKED AS UV RESISTANT, PVC IS NOT APPROVED FOR INSTALLATION IN LOCATIONS SUBJECT TO DIRECT SUNLIGHT AND SHALL NOT BE EMPLOYED IN ANY SUCH LOCATION.

8. IF USED, ALL EXPOSED WIRENUTS ARE TO BE SILICONE FILLED, EQUIVALENT TO IDEAL BLUE, AND MUST BE INSTALLED PER MANUFACTURER'S SPECIFICATIONS BY A QUALIFIED/CERTIFIED PERSON.

9. FUSES AND WIRES SUBJECT TO TRANSFORMER INRUSH CURRENT SHALL BE SIZED ACCORDINGLY.

10. ALL DC MATERIALS SHALL BE UL LISTED FOR 600VDC.

11. THE PHOTOVOLTAIC SOURCE CIRCUITS AND PHOTOVOLTAIC OUTPUT CIRCUITS OF THIS PROPOSED SOLAR SYSTEM SHALL NOT BE CONTAINED IN THE SMALL RACEWAY CABLE TRAY, CABLE, OUTLET BOX, JUNCTION BOX, OR SIMILAR FITTINGS AS FEEDERS OR BRANCH CIRCUITS OF OTHER SYSTEMS UNLESS THE CONDUCTORS OF THE DIFFERENT SYSTEMS ARE SEPARATED BY A PARTITION OR ARE CONNECTED TOGETHER.

12. PULL BOXES SHALL BE PROVIDED IN ACCORDANCE WITH NEC 314.28. CONDUIT BODY TYPES T AND L SHALL NOT BE USED FOR 600V LISTED WIRING. CONDUIT BODY TYPES T AND L USED FOR 300V LISTED WIRING SHALL BE METALLIC.

14. CONNECTORS SHALL BE TORQUED PER DEVICE LISTING OR MANUFACTURER'S RECOMMENDATIONS.

15. SPLIT BOLTS/SPLICES/CONNECTORS SHALL BE INSULATED WITH APPROVED MEANS. UL LISTED ELECTRICAL TAPE ALONE IS NOT SUITABLE AS THE ONLY INSULATING MEANS. FOLLOW MANUFACTURER'S INSTRUCTIONS FOR APPLICATION OF INSULATING PRODUCT.

16. ALL CONDUITS ON ROOF MUST BE AT MIN. 3 1/2" ABOVE ROOF.

GROUNDING

SEE ELECTRICAL DIAGRAM AND ELECTRICAL DETAILS FOR MORE GROUNDING INFORMATION.

1. ONLY ONE CONNECTION TO DC CIRCUITS AND ONE CONNECTION TO AC CIRCUITS WILL BE USED FOR SYSTEM GROUNDING (NEC250-21) (REFERENCED TO THE SAME POINT).

2. EQUIPMENT GROUNDING AND SYSTEM GROUNDING CONDUCTORS WILL HAVE AS SHORT A DISTANCE TO GROUND AS POSSIBLE WITH A MINIMUM NUMBER OF TURNS.

3. NON-CURRENT CARRYING METAL PARTS SHALL BE CHECKED FOR PROPER GROUNDING; NOTING THAT TERMINAL LUGS BOLTED ON AN ENCLOSURE'S FINISHED SURFACE MAY BE INSULATED BECAUSE OF PAINT/FINISH. PAINT/FINISH AT POINT OF CONTACT SHALL BE PROPERLY REMOVED.

4. MODULES SHALL BE GROUNDED WITH EQUIPMENT GROUNDING CONDUCTORS BONDED TO A LOCATION APPROVED BY THE MANUFACTURER WITH A MEANS OF BONDING LISTED FOR THIS PURPOSE.

5. THE CONNECTION TO THE MODULE OR PANEL OF THIS PROPOSED SOLAR ELECTRIC SYSTEM SHALL BE ARRANGED SO THAT REMOVAL OF A MODULE OR A PANEL FROM THE PHOTOVOLTAIC SOURCE CIRCUIT DOES NOT INTERRUPT A GROUNDED CONDUCTOR TO ANOTHER PHOTOVOLTAIC SOURCE CIRCUIT. SETS OF MODULES INTERCONNECTED AS SYSTEMS RATED AT 50 VOLTS OR LESS WITH OR WITHOUT BLOCKING DIODES, AND HAVING A SINGLE OVER CURRENT DEVICE SHALL BE CONSIDERED A SINGLE SOURCE CIRCUIT.

6. GROUNDING SYSTEM COMPONENTS SHALL BE LISTED FOR THEIR PURPOSE INCLUDING BUT NOT LIMITED TO GROUND RODS, GROUNDING LUGS, GROUNDING CLAMPS, ETC. GROUNDING DEVICES EXPOSED TO THE ENVIRONMENT SHALL BE RATED FOR DIRECT BURIAL.

GROUND FAULT PROTECTION

1. PHOTOVOLTAIC INVERTERS SHALL BE EQUIPPED WITH DC GROUND FAULT PROTECTION TO REDUCE FIRE HAZARDS. INVERTERS SHALL BE EQUIPPED WITH ANTI-ISLANDING CIRCUITRY.

DISCONNECTING MEANS

1. MEANS SHALL BE PROVIDED TO DISCONNECT ALL CURRENT CARRYING CONDUCTORS OF THE PHOTOVOLTAIC POWER SOURCE FROM ALL OTHER CONDUCTORS IN THE BUILDING.

2. WHERE A CIRCUIT GROUNDING CONNECTION IS NOT DESIGNED TO BE AUTOMATICALLY INTERRUPTED AS PART OF THE GROUND-FAULT PROTECTION SYSTEM REQUIRED BY SECTION 690-5, A SWITCH OR CIRCUIT BREAKER USED AS A DISCONNECTING MEANS SHALL NOT HAVE A POLE IN THE GROUNDED CONDUCTOR.

3. THE GROUNDED CONDUCTOR MAY HAVE A BOLTED OR TERMINAL DISCONNECTING MEANS TO ALLOW MAINTENANCE OR TROUBLESHOOTING BY QUALIFIED PERSONNEL.

4. THE DISCONNECTING MEANS SHALL NOT BE REQUIRED TO BE SUITABLE AS SERVICE EQUIPMENT AND SHALL BE RATED IN ACCORDANCE WITH SECTION 690-17.

5. EQUIPMENT SUCH AS PHOTOVOLTAIC SOURCE CIRCUITS, OVER CURRENT DEVICES, AND BLOCKING DIODES SHALL BE PERMITTED ON THE PHOTOVOLTAIC SIDE OF THE PHOTOVOLTAIC DISCONNECTING MEANS.

6. MEANS SHALL BE PROVIDED TO DISCONNECT EQUIPMENT SUCH AS INVERTERS, BATTERIES, CHARGE CONTROLLERS, AND THE LIKE FROM ALL UNGROUNDED CONDUCTORS OF ALL SOURCES. IF THE EQUIPMENT IS ENERGIZED FROM MORE THAN ONE SOURCE, THE DISCONNECTING MEANS SHALL BE GROUPED AND IDENTIFIED.

7. A SINGLE DISCONNECTING MEANS SHALL BE PERMITTED FOR THE COMBINED AC OUTPUT OF ONE OR MORE INVERTERS IN AN INTERACTIVE SYSTEM.

8. 690-16 FUSES. DISCONNECTING MEANS SHALL BE PROVIDED TO DISCONNECT A FUSE FROM ALL SOURCES OF SUPPLY IF THE FUSE IS ENERGIZED FROM BOTH DIRECTIONS AND ACCESSIBLE TO OTHER THAN QUALIFIED PERSONS. SUCH A FUSE IN PHOTOVOLTAIC SOURCE CIRCUIT SHALL BE CAPABLE OF BEING DISCONNECTED INDEPENDENTLY OF FUSES IN OTHER PHOTOVOLTAIC SOURCE CIRCUITS.

9. ALL DISCONNECTS AND COMBINERS SHALL BE SECURED FROM UNAUTHORIZED AND UNQUALIFIED PERSONNEL BY EITHER LOCK OR LOCATION.

REQUIRED SAFETY SIGNS AND LABELS

REQUIRED SAFETY SIGNS AND LABELS SHALL BE PERMANENTLY ATTACHED BY ADHESIVE OR OTHER MECHANICAL MEANS. LABELS SHALL COMPLY WITH ARTICLE 690 OF THE NEC OR OTHER APPLICABLE STATE AND LOCAL CODES. SEE LABELS AND MARKING PAGE E.8 FOR MORE INFORMATION

1. ANY SWITCH, FUSES, OR CIRCUIT BREAKERS THAT CAN BE ENERGIZED IN EITHER DIRECTION SHALL BE LABELED AS FOLLOWS:

WARNING:
ELECTRICAL SHOCK HAZARD. DO NOT TOUCH TERMINALS.
TERMINALS ON BOTH THE LINE AND LOAD SIDES MAY BE ENERGIZED IN THE OPEN POSITION.

2. THIS PHOTOVOLTAIC SYSTEM WILL BE EQUIPPED WITH AN AC DISCONNECT WHICH WILL BE LABELED AS FOLLOWS:

PHOTOVOLTAIC
DISCONNECTING MEANS
AC DISCONNECT

3. A MARKING SPECIFYING THE PHOTOVOLTAIC POWER SOURCE RATED AS FOLLOWS SHALL BE PROVIDED AT AN ACCESSIBLE LOCATION AT THE DISCONNECTION MEANS FOR THE POWER SOURCE:

OPERATING CURRENT
OPERATING VOLTAGE
MAXIMUM SYSTEM VOLTAGE
SHORT CIRCUIT CURRENT
FUSE RATING

MARKINGS

1. ALL INTERACTIVE SYSTEM POINTS OF INTERCONNECTION WITH OTHER SOURCES SHALL BE MARKED AT AN ACCESSIBLE LOCATION AT THE DISCONNECTION MEANS.

2. A PERMANENT PLAQUE OR DIRECTORY SHALL BE PROVIDED IDENTIFYING THE LOCATION OF THE SERVICE DISCONNECTION MEANS AND THE PHOTOVOLTAIC SYSTEM DISCONNECTION MEANS, IF NOT LOCATED AT THE SAME LOCATION.

3. PHOTOVOLTAIC MODULES SHALL BE MARKED TO IDENTIFY LEAD POLARITY, DEVICE RATINGS, AND SPECIFICATIONS FOR VOLTAGE, CURRENT, AND POWER.

GENERAL NOTES FOR PHOTOVOLTAIC INVERTERS

1. CONDUIT AND CONDUCTORS: ALL INTERCONNECT WIRING AND POWER CONDUCTORS INTERFACING THE UNIT MUST BE IN ACCORDANCE WITH THE NEC ANSI/NFPA 70 AND ANY APPLICABLE LOCAL CODES. LARGE GAUGE WIRE MUST CONFORM TO THE MINIMUM BEND RADIUS SPECIFIED IN THE NEC, ARTICLE 373-6B, NINTH EDITION. KEEP ALL WIRE BUNDLES AWAY FROM ANY SHARP EDGES TO AVOID DAMAGE TO WIRE INSULATION. ALL CONDUCTORS SHOULD BE MADE OF COPPER AND RATED FOR 90 DEGREE C MINIMUM. FOR OUTDOOR INSTALLATIONS, ALL INTERCONNECT CONDUITS AND FITTINGS MUST BE NEMA-4 RATED AS REQUIRED BY NEC. FOR WIRE GAUGE, BOLT SIZE, AND TORQUE VALUES FOR THE DC AND AC TERMINALS, SEE INSTALLATION MANUAL.

2. INVERTER ENCLOSURE: INVERTERS ARE INDOOR/OUTDOOR RATED. RUGGED HEAVY GAUGE METAL WITH ENAMEL COATED PAINT ON ALL SURFACES. ALL REMOVABLE INTERNAL PANELS ARE GALVANIZED. ALL SURFACES ARE PAINTED WITH (2) COATS OF RUST INHIBITING PRIMER AND PAINTED WITH UL LISTED RAL 7032.

3. ENVIRONMENTAL CONDITIONS: INVERTERS ARE DESIGNED TO BE INSTALLED IN EITHER AN INDOOR OR OUTDOOR LOCATION. THE UNIT MUST BE ANCHORED TO A LEVEL CONCRETE FLOOR OR PAD. ALLOWABLE OPERATING TEMPERATURE RANGE FOR THE UNIT IS -15 TO 50 DEGREES C. EXPOSURE LIMITS OF THE UNIT ARE -40 TO 50 DEGREE C. THE INVERTER UNIT USES FILTERED FORCED AIR COOLING FOR ALL MAJOR SYSTEM COMPONENTS. THE 3 PHASE INVERTER ASSEMBLIES ARE MOUNTED ON AIR-COOLED HEAT SINK.

4. OPERATOR INTERFACE CONTROLS: OPERATOR INTERFACE CONTROLS ARE LOCATED ON THE FRONT OF THE MAIN INVERTER ENCLOSURE. CONSULT THE OPERATIONS AND MAINTENANCE MANUAL FOR INSTRUCTIONS AND CODE REFERENCES.

5. ELECTRICAL SAFETY FEATURES:

DISCONNECTING DEVICES BETWEEN THE SOLAR ARRAY PANELS, THE UTILITY, AND THE UNIT ARE PROVIDED FOR THE INVERTER ENCLOSURE. THESE DISCONNECT SWITCHES ARE TO BE USED FOR ISOLATING THE SOLAR ARRAY PANELS FROM THE UNIT FOR MAINTENANCE PURPOSES AND ARE TO BE USED AS NO-LOAD DISCONNECTING DEVICES ONLY.

THE UNIT HAS ONLY ONE MODE OF OPERATION, LINE LINKAGE MODE (GRID EXPORT MODE). THE THREE PHASE OUTPUT VOLTAGES AND CURRENTS ARE SINUSOIDAL WITH LOW TOTAL HARMONIC DISTORTION MEETING IEEE 519-1992 HARMONIC STANDARDS.

THE ANTI-ISLANDING TRIP TIME IS LESS THAN (2) SECONDS AS PER UL 1741 STANDARDS. THE INVERTER UNIT WILL AUTOMATICALLY SHUT DOWN WHEN THE LOSS OF GRID POWER IS DETECTED.

6. PV PROTECTION DEVICE

THE UNIT COMES EQUIPPED WITH A UL1741 APPROVED GROUND FAULT CIRCUIT INTERRUPTER ("GFCI"). EQUIPMENT GROUNDING CONDUCTORS SIZED PER TABLE 250.122 IN ACCORDANCE WITH NEC 250.122(F)(2).

PROJECT TITLE:
2103-HILL
5475 JACK CREEK RD.
TEMPLETON, CA 93465
APN: 039-191-03-5

ENGINEER'S STAMP

Pristine Sun
PRISTINE SUN, LLC
649 Mission Street, 5th Floor,
San Francisco, CA 94105
JOB NUMBER: 10210

REVISIONS

#	DATE	ISSUE
A	22-MAY-13	FOR SUBMITTAL
B	27-JUN-13	AHJ COMMENTS
C	02-AUG-13	FOR RESUBMITTAL
D	21-OCT-13	PHASE 2- UPDATE

DRAWN BY:	NATRON
CHECKED BY:	JHA
APPROVED BY:	JHA
DOCUMENT DATE:	10/17/2013

SCALE: NTS

SHEET TITLE: ELECTRICAL NOTES

SHEET #: E.0.1

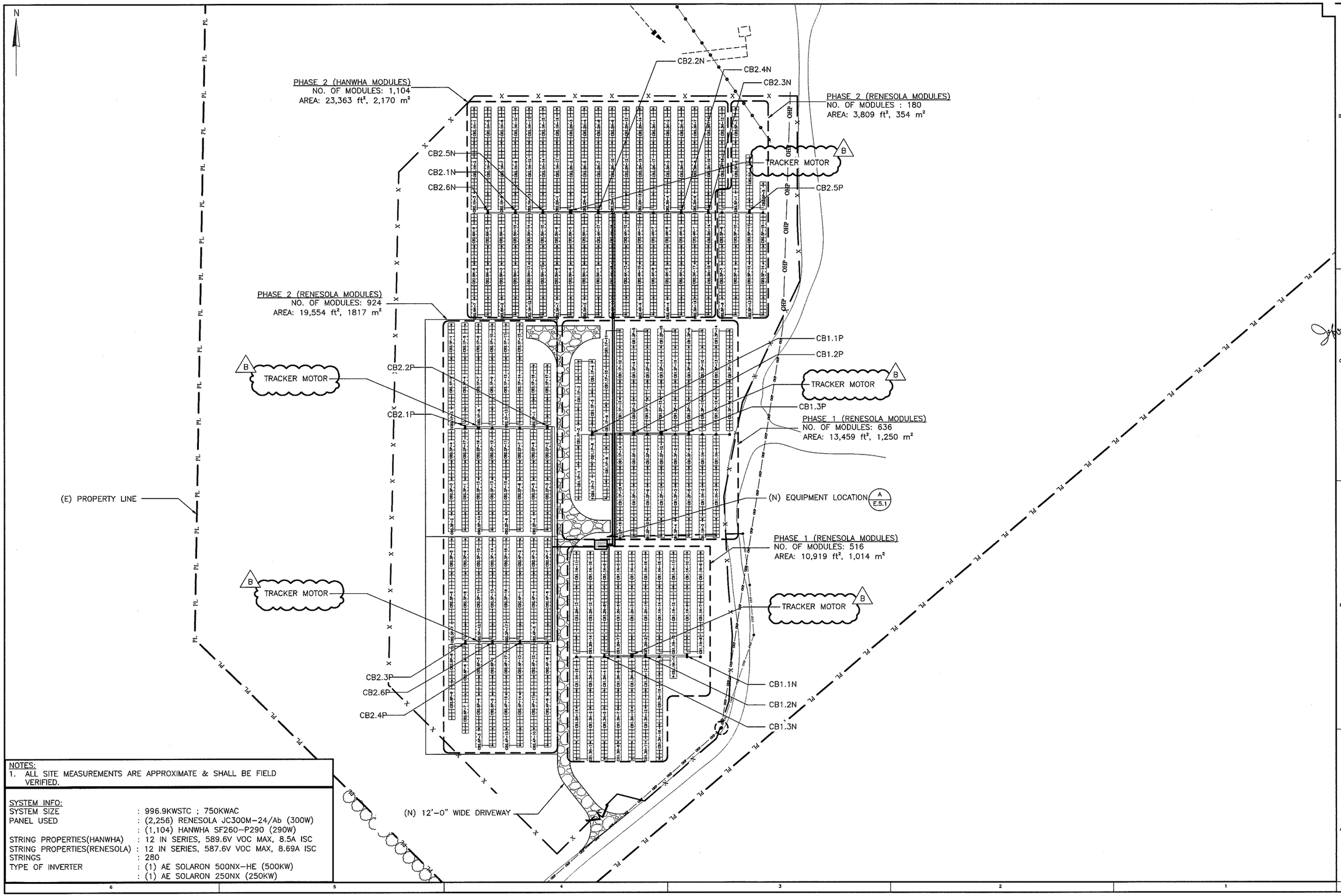

NOTES:
1. ALL SITE MEASUREMENTS ARE APPROXIMATE & SHALL BE FIELD VERIFIED.

SYSTEM INFO:

SYSTEM SIZE	: 996.9KWSTC ; 750KWAC
PANEL USED	: (2,256) RENESOLA JC300M-24/Ab (300W)
	: (1,104) HANWHA SF260-P290 (290W)
STRING PROPERTIES(HANWHA)	: 12 IN SERIES, 589.6V VOC MAX, 8.5A ISC
STRING PROPERTIES(RENESOLA)	: 12 IN SERIES, 587.6V VOC MAX, 8.69A ISC
STRINGS	: 280
TYPE OF INVERTER	: (1) AE SOLARON 500NX-HE (500KW)
	: (1) AE SOLARON 250NX (250KW)

PROJECT TITLE:

2103-HILL
5475 JACK CREEK RD.
TEMPLETON, CA 93465
APN: 039-191-03-5

ENGINEER'S STAMP

REGISTERED PROFESSIONAL ENGINEER
JEFFREY H. ANG
Lic No. 19459
Exp. 06/30/2015
Electrical Engineer
STATE OF CALIFORNIA

Pristine Sun
PRISTINE SUN, LLC
649 Mission Street, 5th Floor,
San Francisco, CA 94105
JOB NUMBER: 10210

REVISIONS

#	DATE	ISSUE
A	22-MAY-13	FOR SUBMITTAL
B	27-JUN-13	AHJ COMMENTS
C	02-AUG-13	FOR RESUBMITTAL
D	21-OCT-13	PHASE 2- UPDATE

DRAWN BY:	NATRON
CHECKED BY:	JHA
APPROVED BY:	JHA
DOCUMENT DATE:	10/17/2013

SCALE:
1"=40'-0"

SHEET TITLE:
ELECTRICAL SITE PLAN

SHEET #:
E.1.1

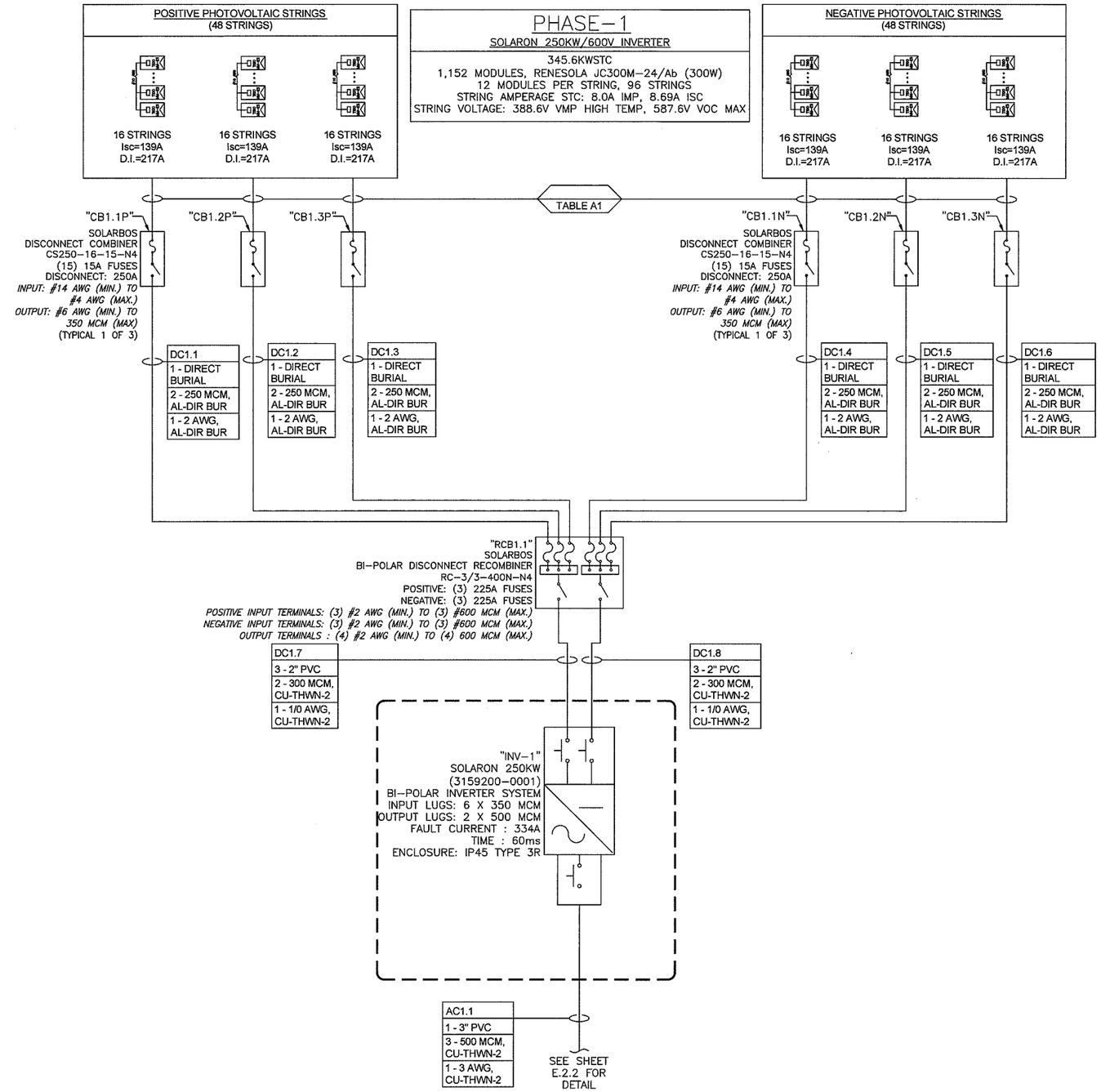

TAG LEGEND
OF CONDUITS
AND TYPE OF CONDUCTORS PER CONDUIT
AND TYPE GROUND PER CONDUIT

NOTES:
1. TABLE A1, TABLE B1 AND TABLE C1 ON SHEET E.4.1.
2. ADD NOTE ON PERMANENTLY AFFIXED LABEL FOR PANEL: "ENERGY SYSTEM SUPPLY CIRCUITS ONLY, NO LOAD CIRCUITS ALLOWED".

PROJECT TITLE:

2103-HILL
5475 JACK CREEK RD.
TEMPLETON, CA 93465
APN: 039-191-03-5

ENGINEER'S STAMP

REGISTERED PROFESSIONAL ENGINEER
JEFFREY H. JANSEN
C.E. No. 16486
Exp. 06/30/2015
Civil
Electrical
STATE OF CALIFORNIA

Pristine Sun
PRISTINE SUN, LLC
649 Mission Street, 5th Floor,
San Francisco, CA 94105
JOB NUMBER: 10210

REVISIONS

#	DATE	ISSUE
A	22-MAY-13	FOR SUBMITTAL
B	27-JUN-13	AHJ COMMENTS
C	02-AUG-13	FOR RESUBMITTAL
D	21-OCT-13	PHASE 2- UPDATE

DRAWN BY:	NATRON
CHECKED BY:	JHA
APPROVED BY:	JHA
DOCUMENT DATE:	10/17/2013

SCALE: NTS

SHEET TITLE: SINGLE LINE DIAGRAM (PHASE 1)

SHEET #: E.2.1

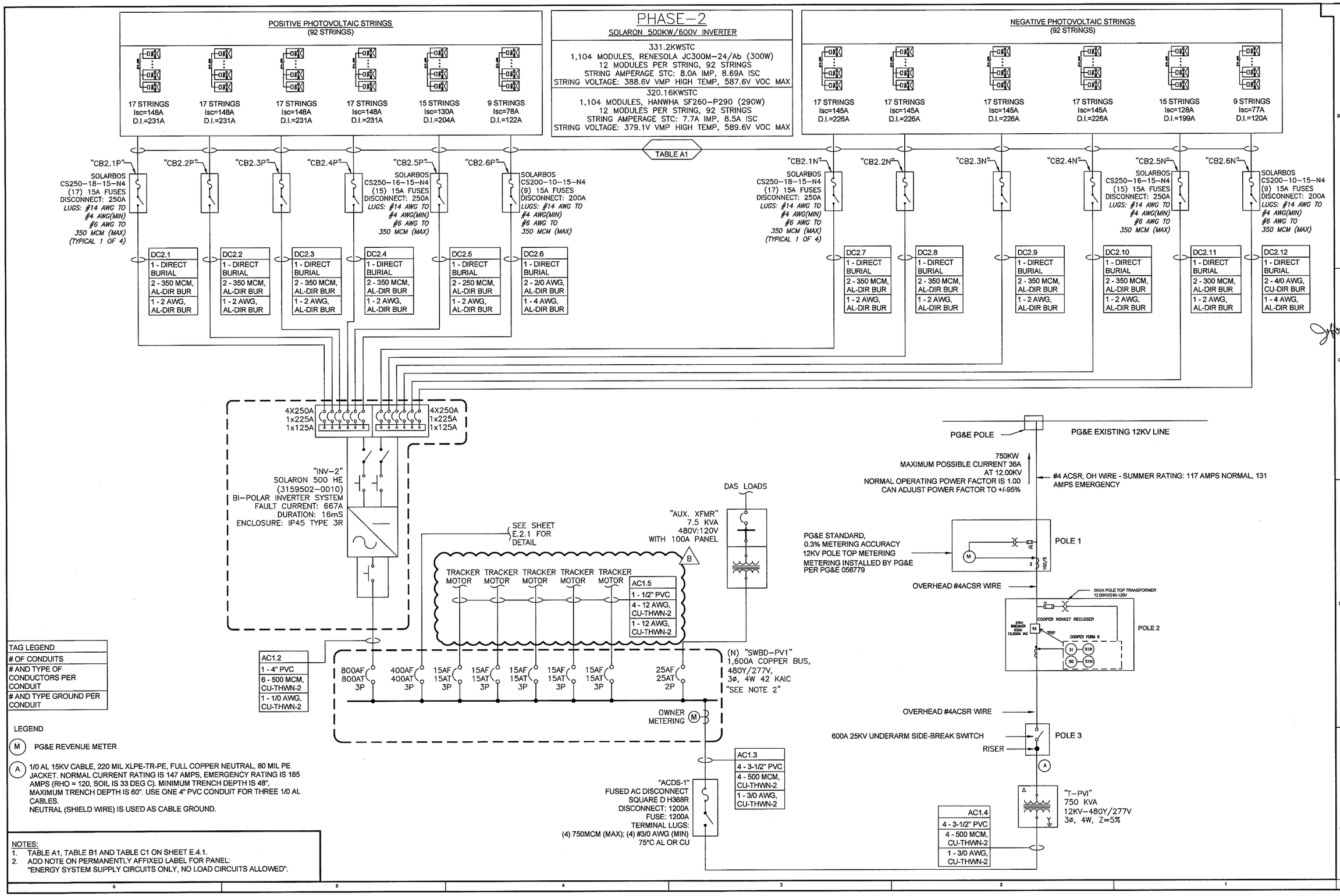

TAG LEGEND
OF CONDUITS
AND TYPE OF CONDUCTORS PER CONDUIT
AND TYPE GROUND PER CONDUIT

LEGEND

(M) PG&E REVENUE METER

(A) 1/0 AL 15KV CABLE, 220 MIL XLPE-TR-PE, FULL COPPER NEUTRAL, 80 MIL PE JACKET. NORMAL CURRENT RATING IS 147 AMPS, EMERGENCY RATING IS 185 AMPS (RHO = 120, SOIL IS 33 DEG C). MINIMUM TRENCH DEPTH IS 48", MAXIMUM TRENCH DEPTH IS 60". USE ONE 4" PVC CONDUIT FOR THREE 1/0 AL CABLES.
NEUTRAL (SHIELD WIRE) IS USED AS CABLE GROUND.

NOTES:
1. TABLE A1, TABLE B1 AND TABLE C1 ON SHEET E.4.1.
2. ADD NOTE ON PERMANENTLY AFFIXED LABEL FOR PANEL: "ENERGY SYSTEM SUPPLY CIRCUITS ONLY, NO LOAD CIRCUITS ALLOWED".

PROJECT TITLE:
2103-HILL
5475 JACK CREEK RD.
TEMPLETON, CA 93465
APN: 039-191-03-5

ENGINEER'S STAMP
REGISTERED PROFESSIONAL ENGINEER
JEFFREY H. ANDERSON
Lic. No. 19486
Exp. 06/30/2015
Electrical Engineer
STATE OF CALIFORNIA

Prometheus Sun
PRISTINE SUN, LLC
649 Mission Street, 5th Floor,
San Francisco, CA 94105
JOB NUMBER: 10210

REVISIONS

#	DATE	ISSUE
A	22–MAY–13	FOR SUBMITTAL
B	27–JUN–13	AHJ COMMENTS
C	02–AUG–13	FOR RESUBMITTAL
D	21–OCT–13	PHASE 2– UPDATE

DRAWN BY:	NATRON
CHECKED BY:	JHA
APPROVED BY:	JHA
DOCUMENT DATE:	10/17/2013

SCALE: NTS

SHEET TITLE: SINGLE LINE DIAGRAM (PHASE 2)

SHEET #: E.2.2

REFERENCE NOTES:

(A1) SEE SHEET E.4.1 "TABLE A1" FOR CONDUCTOR SIZES.

(B1) SEE SHEET E.4.1 "TABLE B1" FOR CONDUCTOR SIZES.

(C1) SEE SHEET E.4.1 "TABLE B1" FOR CONDUCTOR SIZES.

KEYED NOTES:

1. (N) RENESOLA JC300M-24/Ab (300W) MODULES TYPICAL OF 1,152.
2. #10 AWG BARE COPPER GROUND WILL BE USED AS AN EQUIPMENT GROUND TO CONNECT THE MODULE FRAMES USE THE MODULE GROUNDING SCREW OR "LAY-IN" LUGS REQUIRED PER NEC 690 FOR MODULE EQUIPMENT GROUNDING. USE THE MODULE RECOMMENDED METHODS FOR GROUNDING. THE MODULE EQUIPMENT GROUND SHALL GROUND ALL OTHER EQUIPMENT AND SHALL TERMINATE IN THE INVERTER CABINET.
3. (N) SOLARBOS FUSED DISCONNECT COMBINER BOX, NEMA 4 ENCLOSURE. (TYPICAL OF 6)
4. (N) BI-POLAR DISCONNECT RECOMBINER BOX, NEMA 4 ENCLOSURE. RATED @ 600 VDC, CONTINUOUS DUTY, 90°C. GROUNDING ELECTRODE CONDUCTOR INSTALLED IN COMPLIANCE WITH NEC 250.64. SEE E.2.1 FOR DETAILS AND COMBINER BOX DISTRIBUTION.
5. (N) SOLARON 250KW (3159200-0001) INVERTER.
6. (N) CIRCUIT BREAKER 800AF, 800AT, 3P.
7. (N) CIRCUIT BREAKER 400AF, 400AT, 3P.
8. (N) CIRCUIT BREAKER 15AF, 15AT, 3P.
9. (N) CIRCUIT BREAKER 25AF, 25AT, 2P.
10. (N) OWNER METER
11. (N) SOLAR PANELBOARD "SWBD-PV1".
12. (N) SQUARE D FUSED AC DISCONNECT "ACDS-1".

PHASE 1

B REFERENCE TABLE & NOTES
SCALE: NA

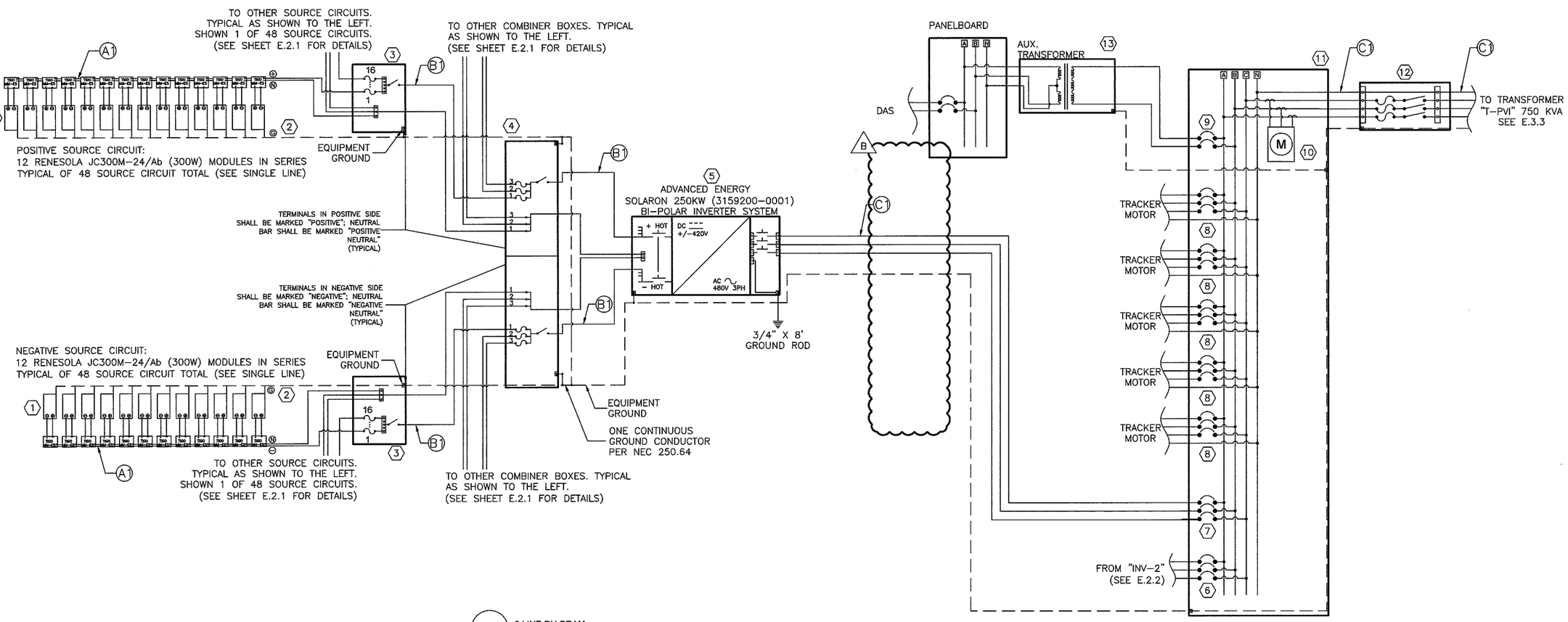

A 3-LINE DIAGRAM
SCALE: NA

"INV 1" SYSTEM STATISTICS:
334.56KWSTC, 250KWAC
(1) SOLARON 250KW (3159200-0001) INVERTER

PROJECT TITLE:

2103-HILL
5475 JACK CREEK RD.
TEMPLETON, CA 93465
APN: 039-191-03-5

ENGINEER'S STAMP

REGISTERED PROFESSIONAL ENGINEER
JEFFREY H. ALLEN
C 46 No. 19488
Exp. 06/30/2015
Electrical Engineer
STATE OF CALIFORNIA

PristineSun
PRISTINE SUN, LLC
649 Mission Street, 5th Floor,
San Francisco, CA 94105
JOB NUMBER: 10210

REVISIONS

#	DATE	ISSUE
A	22-MAY-13	FOR SUBMITTAL
B	27-JUN-13	AHJ COMMENTS
C	02-AUG-13	FOR RESUBMITTAL
D	21-OCT-13	PHASE 2- UPDATE

DRAWN BY:	NATRON
CHECKED BY:	JHA
APPROVED BY:	JHA
DOCUMENT DATE:	10/17/2013

SCALE: NTS

SHEET TITLE: THREE LINE DIAGRAM (PHASE 1)

SHEET #: E.3.1

REFERENCE NOTES:

(A1) SEE SHEET E.4.1 "TABLE A1" FOR CONDUCTOR SIZES.

(B1) SEE SHEET E.4.1 "TABLE B1" FOR CONDUCTOR SIZES.

(C1) SEE SHEET E.4.1 "TABLE B1" FOR CONDUCTOR SIZES.

KEYED NOTES:

1. (N) HANWHA SF260-P290 (290W) MODULES TYPICAL OF 1,104.
   (N) RENESOLA JC 300M-24/Ab (300W) MODULES TYPICAL OF 1,104.
2. #10 AWG BARE COPPER GROUND WILL BE USED AS AN EQUIPMENT GROUND TO CONNECT THE MODULE FRAMES USE THE MODULE GROUNDING SCREW OR "LAY-IN" LUGS REQUIRED PER NEC 690 FOR MODULE EQUIPMENT GROUNDING. USE THE MODULE RECOMMENDED METHODS FOR GROUNDING. THE MODULE EQUIPMENT GROUND SHALL GROUND ALL OTHER EQUIPMENT AND SHALL TERMINATE IN THE INVERTER CABINET.
3. (N) SOLARBOS FUSED DISCONNECT COMBINER BOX, NEMA 4 ENCLOSURE. (TYPICAL OF 12)
4. INVERTER INTEGRATED FUSED ARRAY COMBINER BOX, NEMA 3R ENCLOSURE. RATED @ 600 VDC, CONTINUOUS DUTY, 90°C. GROUNDING ELECTRODE CONDUCTOR INSTALLED IN COMPLIANCE WITH NEC 250.64. (TYPICAL OF 2). SEE E.2.1 FOR DETAILS AND COMBINER BOX DISTRIBUTION PER ARRAY COMBINER BOX.
5. (N) SOLARON 500 HE (3159502-0010) INVERTER.
6. (N) CIRCUIT BREAKER 800AF, 800AT, 3P.
7. (N) CIRCUIT BREAKER 400AF, 400AT, 3P.
8. (N) CIRCUIT BREAKER 15AF, 15AT, 3P.
9. (N) CIRCUIT BREAKER 25AF, 25AT, 2P.
10. (N) OWNER METER
11. (N) SOLAR PANELBOARD "SWBD-PV1".
12. (N) SQUARE D FUSED AC DISCONNECT "ACDS-1".

PHASE 2

B REFERENCE TABLE & NOTES
SCALE: NA

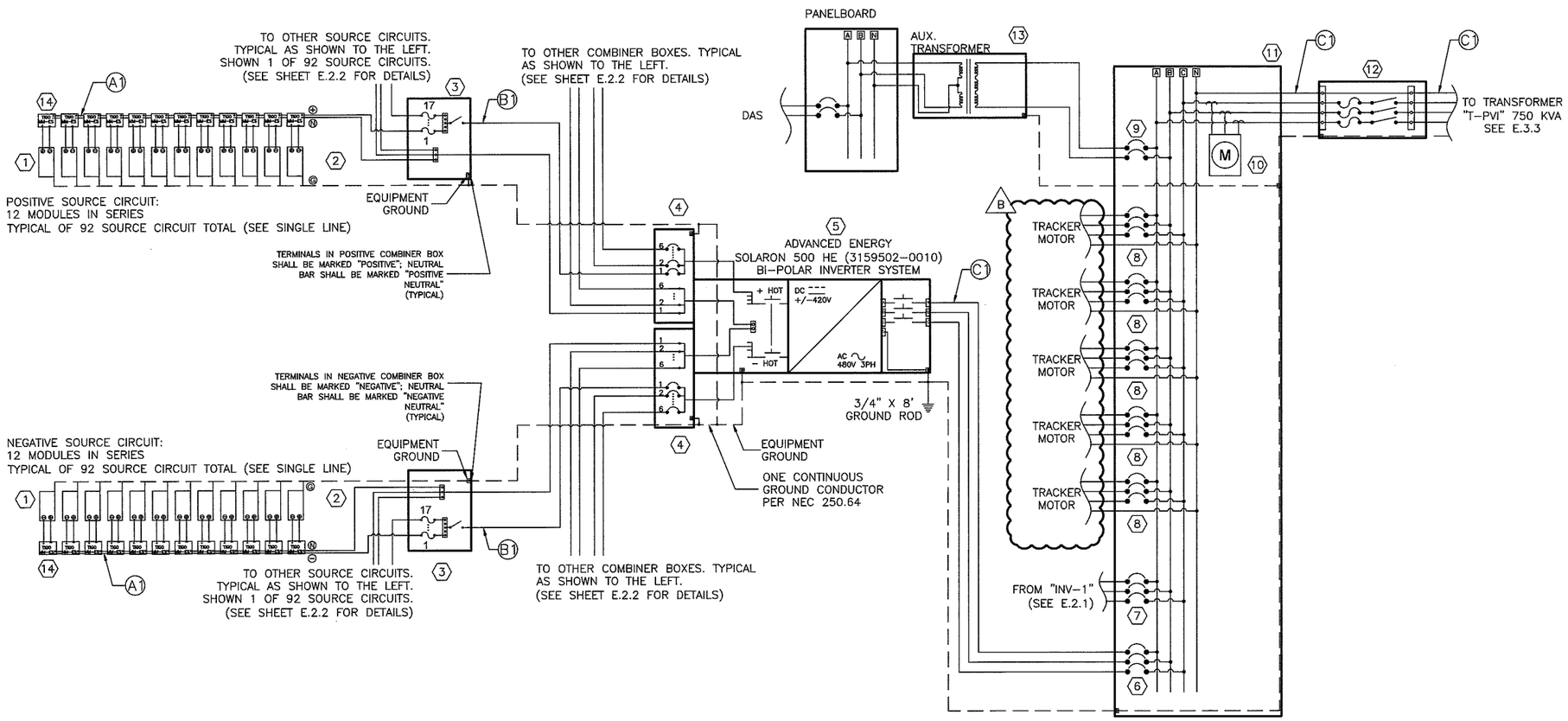

A 3-LINE DIAGRAM
SCALE: NA

"INV 2" SYSTEM STATISTICS:
651.36KWSTC, 500KWAC
(1) SOLARON 500KW (3159502-0010) INVERTER

PROJECT TITLE:
2103-HILL
5475 JACK CREEK RD.
TEMPLETON, CA 93465
APN: 039-191-03-5

ENGINEER'S STAMP
REGISTERED PROFESSIONAL ENGINEER JEFFREY H. ANDERSON No. 19489 Exp. 06/30/2015 Electrical STATE OF CALIFORNIA

Prestige Sun
PRISTINE SUN, LLC
649 Mission Street, 5th Floor,
San Francisco, CA 94105
JOB NUMBER: 10210

#	DATE	ISSUE
A	22-MAY-13	FOR SUBMITTAL
B	27-JUN-13	AHJ COMMENTS
C	02-AUG-13	FOR RESUBMITTAL
D	21-OCT-13	PHASE 2- UPDATE

REVISIONS

DRAWN BY:	NATRON
CHECKED BY:	JHA
APPROVED BY:	JHA
DOCUMENT DATE:	10/17/2013

SCALE: NTS

SHEET TITLE: THREE LINE DIAGRAM (PHASE 2)

SHEET #: E.3.2

KEYED NOTES:

13. (N) TRANSFORMER "T-PVI" 750 KVA, 12KV-480Y/277V, 3ø, 4W, Z=5%, NEMA 3R
14. (N) 900A 25KV UNDERARM SIDE-BREAK SWITCH
15. (N) COOPER NOVA15 RECLOSER
16. (N) PG&E STANDARD, 0.3% METERING ACCURACY, 12KV POLE TOP METERINNG, METERING INSTALLED BY PG&E PER PG&E 058779

B REFERENCE TABLE & NOTES
SCALE: NA

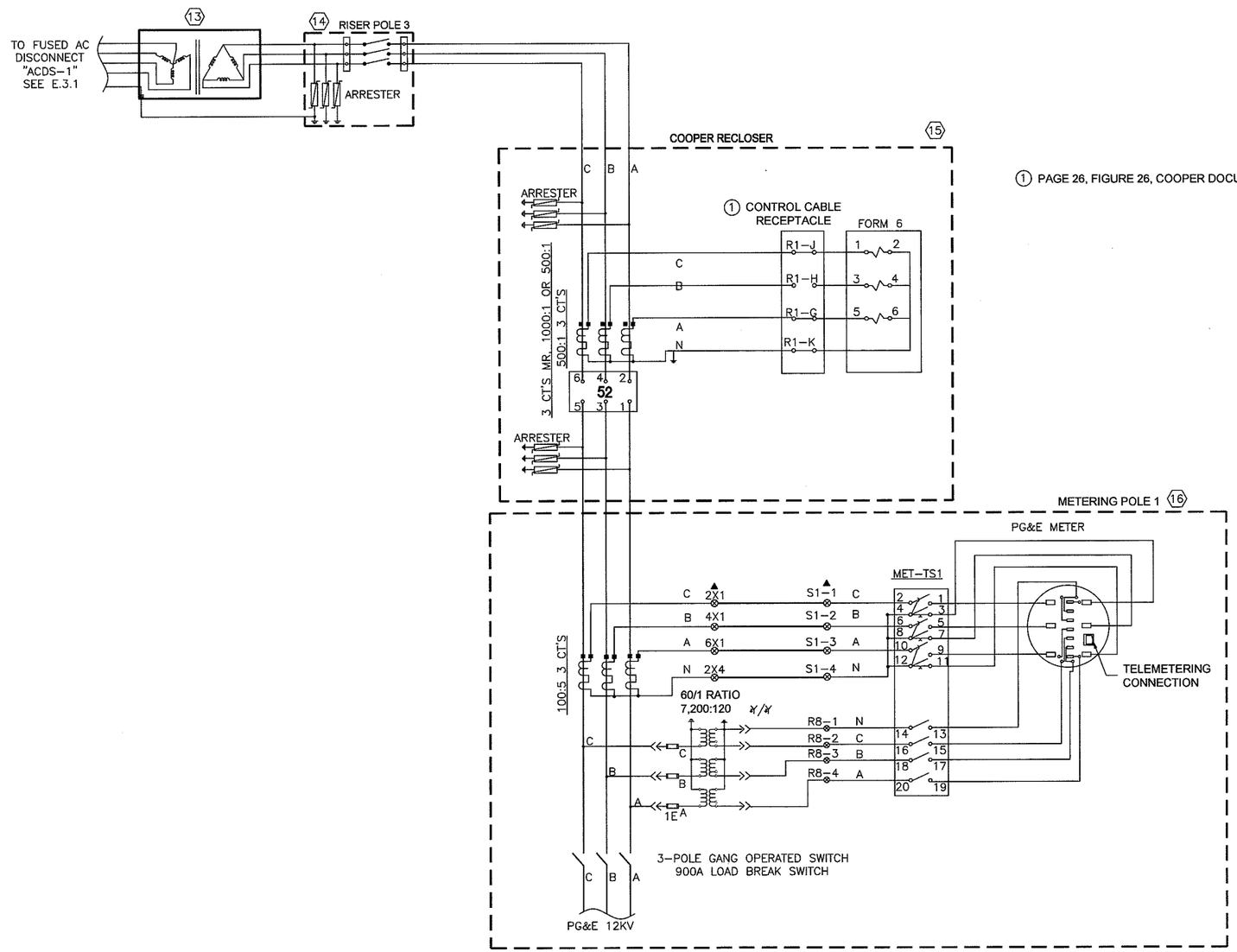

1 PAGE 26, FIGURE 26, COOPER DOCUMENT S280-42-1

PROJECT TITLE:

2103-HILL
5475 JACK CREEK RD.
TEMPLETON, CA 93465
APN: 039-191-03-5

ENGINEER'S STAMP

REGISTERED PROFESSIONAL ENGINEER
JEFFREY H. ARNOLD
Lic. No. 19488
Exp. 06/30/2015
Electrical Engineer
STATE OF CALIFORNIA

Pristine Sun
PRISTINE SUN, LLC
649 Mission Street, 5th Floor,
San Francisco, CA 94105
JOB NUMBER: 10210

REVISIONS

#	DATE	ISSUE
A	22-MAY-13	FOR SUBMITTAL
B	27-JUN-13	AHJ COMMENTS
C	02-AUG-13	FOR RESUBMITTAL
D	21-OCT-13	PHASE 2- UPDATE

DRAWN BY:	NATRON
CHECKED BY:	JHA
APPROVED BY:	JHA
DOCUMENT DATE:	10/17/2013

SCALE: NTS

SHEET TITLE: THREE LINE DIAGRAM -3

SHEET #: E.3.3

TABLE A1: SOURCE CIRCUIT CONDUCTOR AND CONDUIT IDENTIFICATION

CONDUCTOR LOCATION	NUMBER OF MODULES IN SERIES	Isc (A)	Imp (A)	Voc (VDC)	Vmp (VDC)	ONE WAY LENGTH (FT)	VOLTAGE DROP %	CURRENT CARRYING CONDUCTOR	BONDING CONDUCTOR SIZE (AWG)	CONDUIT	NOTES
MODULE TO CB1.1P THROUGH CB1.3N	12	8.69	8.2	537.6	439.2	150	0.69%	10 AWG, USE-2	10	FREE-AIR OR 1/2" EMT MIN	
MODULE TO CB2.1P THROUGH CB2.6P	12	8.69	8.2	537.6	439.2	150	0.69%	10 AWG, USE-2	10	FREE-AIR OR 1/2" EMT MIN	

TABLE A2: SOURCE CIRCUIT CONDUCTOR AND CONDUIT IDENTIFICATION

CONDUCTOR LOCATION	NUMBER OF MODULES IN SERIES	Isc (A)	Imp (A)	Voc (VDC)	Vmp (VDC)	ONE WAY LENGTH (FT)	VOLTAGE DROP %	CURRENT CARRYING CONDUCTOR	BONDING CONDUCTOR SIZE (AWG)	CONDUIT	NOTES
MODULE TO CB2.1N THROUGH CB2.6N	12	8.5	7.99	536.4	435.6	150	0.68%	10 AWG, USE-2	10	FREE-AIR OR 1/2" EMT MIN	

TABLE B1: DC OUTPUT CIRCUIT CONDUCTOR AND CONDUIT IDENTIFICATION

INITIAL CONDUCTOR LOCATION	FINAL CONDUCTOR LOCATION	# STRINGS IN COMBINER BOX IN PARALLEL	CONDUIT NAME	CIRCUIT ID	CONDUIT SIZE	#CONDUIT	# COND IN CONDUIT	% OF MAX CONDUIT FILL	310.15(B)(2)(c) and 310.16 Temp Correction Factor	310.15(B)(2)(a) Fill Adjustment Factor	690.8 (A)(1) and (B)(1) Adjustment Factors	Isc	DESIGN LINE CURRENT	WIRE AMPACITY 30C AMBIENT	OCPD	MINIMUM CORRECTED AMPACITY	CONDUCTOR CORRECTED AMPACITY	ONE WAY LENGTH (FT)	VOLTAGE DROP %	CURRENT CARRYING CONDUCTOR TYPE AND SIZE (AWG)	EQUIPMENT GROUNDING CONDUCTOR SIZE (AWG)	NOTES
CB1.1P	RCB1.1	16	DC1.1	DC1.1-1	DIRECT BURIAL	1	3	N/A	0.91	1.00	1.56	139	217	230	225	174	209	120	0.52%	250 MCM, AL-DIR BUR	2 AWG, AL-DIR BUR	
CB1.2P	RCB1.1	16	DC1.2	DC1.2-1	DIRECT BURIAL	1	3	N/A	0.91	1.00	1.56	139	217	230	225	174	209	180	0.79%	250 MCM, AL-DIR BUR	2 AWG, AL-DIR BUR	
CB1.3P	RCB1.1	16	DC1.3	DC1.3-1	DIRECT BURIAL	1	3	N/A	0.91	1.00	1.56	139	217	230	225	174	209	240	1.05%	250 MCM, AL-DIR BUR	2 AWG, AL-DIR BUR	
CB1.1N	RCB1.1	16	DC1.4	DC1.4-1	DIRECT BURIAL	1	3	N/A	0.91	1.00	1.56	139	217	230	225	174	209	120	0.52%	250 MCM, AL-DIR BUR	2 AWG, AL-DIR BUR	
CB1.2N	RCB1.1	16	DC1.5	DC1.5-1	DIRECT BURIAL	1	3	N/A	0.91	1.00	1.56	139	217	230	225	174	209	155	0.68%	250 MCM, AL-DIR BUR	2 AWG, AL-DIR BUR	
CB1.3N	RCB1.1	16	DC1.6	DC1.6-1	DIRECT BURIAL	1	3	N/A	0.91	1.00	1.56	139	217	230	225	174	209	200	0.87%	250 MCM, AL-DIR BUR	2 AWG, AL-DIR BUR	
RCB1.1	INV-1	48	DC1.7	DC1.7-1	2" PVC	3	3	N/A	0.91	1.00	1.56	417	652	855	N/A	521	874	20	0.05%	300 MCM, CU-THWN-2	1/0 AWG, CU-THWN-2	
RCB1.1	INV-1	48	DC1.8	DC1.8-1	2" PVC	3	3	N/A	0.91	1.00	1.56	417	652	855	N/A	521	874	20	0.05%	300 MCM, CU-THWN-2	1/0 AWG, CU-THWN-2	
CB2.1P	INV-2	17	DC2.1	DC2.1-1	DIRECT BURIAL	1	3	N/A	0.91	1.00	1.56	148	231	280	250	185	255	250	0.84%	350 MCM, AL-DIR BUR	2 AWG, AL-DIR BUR	
CB2.2P	INV-2	17	DC2.2	DC2.2-1	DIRECT BURIAL	1	3	N/A	0.91	1.00	1.56	148	231	280	250	185	255	170	0.57%	350 MCM, AL-DIR BUR	2 AWG, AL-DIR BUR	
CB2.3P	INV-2	17	DC2.3	DC2.3-1	DIRECT BURIAL	1	3	N/A	0.91	1.00	1.56	148	231	280	250	185	255	230	0.77%	350 MCM, AL-DIR BUR	2 AWG, AL-DIR BUR	
CB2.4P	INV-2	17	DC2.4	DC2.4-1	DIRECT BURIAL	1	3	N/A	0.91	1.00	1.56	148	231	280	250	185	255	170	0.57%	350 MCM, AL-DIR BUR	2 AWG, AL-DIR BUR	
CB2.5P	INV-2	15	DC2.5	DC2.5-1	DIRECT BURIAL	1	3	N/A	0.91	1.00	1.56	130	204	230	225	163	209	480	1.97%	250 MCM, AL-DIR BUR	2 AWG, AL-DIR BUR	
CB2.6P	INV-2	9	DC2.6	DC2.6-1	DIRECT BURIAL	1	3	N/A	0.91	1.00	1.56	78	122	150	125	98	137	200	0.93%	2/0 AWG, AL-DIR BUR	4 AWG, AL-DIR BUR	

PHASE 1

PHASE 2

TABLE B2: DC OUTPUT CIRCUIT CONDUCTOR AND CONDUIT IDENTIFICATION

INITIAL CONDUCTOR LOCATION	FINAL CONDUCTOR LOCATION	# STRINGS IN COMBINER BOX IN PARALLEL	CONDUIT NAME	CIRCUIT ID	CONDUIT SIZE	#CONDUIT	# COND IN CONDUIT	% OF MAX CONDUIT FILL	310.15(B)(2)(c) and 310.16 Temp Correction Factor	310.15(B)(2)(a) Fill Adjustment Factor	690.8 (A)(1) and (B)(1) Adjustment Factors	Isc	DESIGN LINE CURRENT	WIRE AMPACITY 30C AMBIENT	OCPD	MINIMUM CORRECTED AMPACITY	CONDUCTOR CORRECTED AMPACITY	ONE WAY LENGTH (FT)	VOLTAGE DROP %	CURRENT CARRYING CONDUCTOR TYPE AND SIZE (AWG)	EQUIPMENT GROUNDING CONDUCTOR SIZE (AWG)	NOTES
CB2.1N	INV-2	17	DC2.7	DC2.7-1	DIRECT BURIAL	1	3	N/A	0.91	1.00	1.56	145	226	250	250	181	255	350	1.16%	350 MCM, AL-DIR BUR	2 AWG, AL-DIR BUR	
CB2.2N	INV-2	17	DC2.8	DC2.8-1	DIRECT BURIAL	1	3	N/A	0.91	1.00	1.56	145	226	250	250	181	255	350	1.16%	350 MCM, AL-DIR BUR	2 AWG, AL-DIR BUR	
CB2.3N	INV-2	17	DC2.9	DC2.9-1	DIRECT BURIAL	1	3	N/A	0.91	1.00	1.56	145	226	250	250	181	255	350	1.16%	350 MCM, AL-DIR BUR	2 AWG, AL-DIR BUR	
CB2.4N	INV-2	17	DC2.10	DC2.10-1	DIRECT BURIAL	1	3	N/A	0.91	1.00	1.56	145	226	250	250	181	255	350	1.16%	350 MCM, AL-DIR BUR	2 AWG, AL-DIR BUR	
CB2.5N	INV-2	15	DC2.11	DC2.11-1	DIRECT BURIAL	1	3	N/A	0.91	1.00	1.56	128	199	230	225	159	232	350	1.19%	300 MCM, AL-DIR BUR	2 AWG, AL-DIR BUR	
CB2.6N	INV-2	9	DC2.12	DC2.12-1	DIRECT BURIAL	1	3	N/A	0.91	1.00	1.56	77	120	180	125	96	187	350	0.75%	4/0 AWG, CU-DIR BUR	4 AWG, AL-DIR BUR	

PHASE 2

TABLE C1: AC OUTPUT CIRCUIT CONDUCTOR AND CONDUIT IDENTIFICATION

INITIAL CONDUCTOR LOCATION	FINAL CONDUCTOR LOCATION	CONDUIT NAME	CIRCUIT ID	CONDUIT SIZE	#CONDUIT	# COND IN CONDUIT	% OF MAX CONDUIT FILL	310.15(B)(2)(c) and 310.16 Temp Correction Factor	310.15(B)(2)(a) Fill Adjustment Factor	690.8 (A)(3) Adjustment Factor	OPERATING LINE CURRENT	DESIGN LINE CURRENT	WIRE AMPACITY 30C AMBIENT	OCPD	MINIMUM CORRECTED AMPACITY	CONDUCTOR CORRECTED AMPACITY	ONE WAY LENGTH (FT)	VOLTAGE DROP %	CURRENT CARRYING CONDUCTOR TYPE AND SIZE (AWG)	EQUIPMENT GROUNDING CONDUCTOR SIZE (AWG)	NOTES
INV-1	SWBD-PV1	AC1.1	AC1.1-1	3" PVC	1	4	76%	0.91	1.00	1.25	300	375	380	400	375	391	20	0.06%	500 MCM, CU-THWN-2	3 AWG, CU-THWN-2	
INV-2	SWBD-PV1	AC1.2	AC1.2-1	4" PVC	1	7	88%	0.91	0.80	1.25	600	750	760	800	750	626	20	0.06%	500 MCM, CU-THWN-2	1/0 AWG, CU-THWN-2	
SWBD-PV1	ACDS-1	AC1.3	AC1.3-1	3-1/2" PVC	4	5	80%	0.91	0.80	1.25	900	1125	1520	1200	1125	1252	20	0.04%	500 MCM, CU-THWN-2	3/0 AWG, CU-THWN-2	
ACDS-1	T-PVI	AC1.4	AC1.4-1	3-1/2" PVC	4	5	80%	0.91	0.80	1.25	900	1125	1520	N/A	1125	1252	20	0.04%	500 MCM, CU-THWN-2	3/0 AWG, CU-THWN-2	
TR MTR	SWBD-PV1	AC1.5	AC1.5-1	1/2" PVC	1	5	58%	0.91	0.80	1.25	2	2	25	15	2	22	400	0.52%	12 AWG, CU-THWN-2	12 AWG, CU-THWN-2	

PHASE 1

PHASE 2

STRING VOC CALCULATION	
PER NEC 2008, Section 690.7	
PANEL VOC, 25C	44.7
NUMBER IN SERIES	12
STRING VOC STC	536.4
DESIGN LOW, (ASHRAE) C	-6
TEMP COEFFICIENT, %/C	-0.32%
PANEL VOC * NUMBER IN SERIES * (1 - (25 - DESIGN LOW TEMP)* VOC TEMP COEFFICIENT) = MAX VOC AT DESIGN LOW	
(44.7 * 12 * (1-(25-(-6)* (-0.0032)) = 589.61	

DC CONDUITS	DC VOLTAGE DROP	DESIGN LINE CURRENT	MINIMUM CORRECTED AMPACITY	CONDUIT FILL	CONDUCTOR CORRECTED AMPACITY
CONDUIT NAME	(2*ONE WAY LENGTH*RESISTANCE PER 1000FT*PHASE CURRENT/1000 FT/STRING VOLTAGE*2 WIRES/# WIRES PER PHASE)= VOLTAGE DROP IN CONDUIT	ISC*1.56	ISC*1.25	100*(TOTAL CONDUCTOR AREA)/((CONDUIT AREA)*(PERCENT ALLOWED FILL)) = PERCENT MAXIMUM FILL	CONDUCTOR AMPACITY AT 30C * CONDUCTOR PER PHASE * TEMP. CORRECTION FACTOR * FILL ADJUSTMENT FACTOR = CONDUCTOR CORRECTED AMPACITY
DC1.1-1	#N/A	(144.5 * 1.56) = 225.78	(144.5 * 1.25) = 180.63	#N/A	(230*1*0.91*1) = 232.05

AC CONDUITS (For 3-Phase system)	3 PHASE AC VOLTAGE DROP	DESIGN LINE CURRENT	MINIMUM CORRECTED AMPACITY	CONDUIT FILL	CONDUCTOR CORRECTED AMPACITY
CONDUIT NAME	1.732*ONE WAY LENGTH*RESISTANCE PER 1000FT*PHASE CURRENT/1000 FT/OPERATING VOLTAGE/# WIRES PER PHASE) = VOLTAGE DROP IN CONDUIT	OPERATING CURRENT*1.25	OPERATING CURRENT*1.25	100*(TOTAL CONDUCTOR AREA)/((CONDUIT AREA)*(PERCENT ALLOWED FILL)) = PERCENT MAXIMUM FILL	CONDUCTOR AMPACITY AT 30C * CONDUCTOR PER PHASE * TEMP. CORRECTION FACTOR * FILL ADJUSTMENT FACTOR = CONDUCTOR CORRECTED AMPACITY
AC1.1-1	(1.732*20 * 0.0258 * 600 / 1000FT / 480 / 3)=0.06%	(600 * 1.25) = 750	(600 * 1.25) = 750	#N/A	(760*2*0.91*1) = 782.6

Circuit Voltage Drop

		DC1.1	DC1.2	DC1.3	DC1.4	DC1.5	DC1.6
Total DC drop		1.27%	1.54%	1.80%	1.27%	1.43%	1.62%
Total AC drop		0.14%	0.14%	0.14%	0.14%	0.14%	0.14%
Total voltage drop		1.41%	1.67%	1.94%	1.41%	1.57%	1.76%

Circuit Voltage Drop

		DC2.1	DC2.2	DC2.3	DC2.4	DC2.5	DC2.6	DC2.7	DC2.8	DC2.9	DC2.10	DC2.11	DC2.12
Total DC drop		1.54%	1.27%	1.47%	1.27%	2.66%	1.62%	1.84%	1.84%	1.84%	1.84%	1.87%	1.43%
Total AC drop		0.14%	0.14%	0.14%	0.14%	0.14%	0.14%	0.14%	0.14%	0.14%	0.14%	0.14%	0.14%
Total voltage drop		1.67%	1.41%	1.61%	1.41%	2.80%	1.76%	1.98%	1.98%	1.98%	1.98%	2.01%	1.57%

PROJECT TITLE:

2103-HILL
5475 JACK CREEK RD.
TEMPLETON, CA 93465
APN: 039-191-03-5

ENGINEER'S STAMP

REGISTERED PROFESSIONAL ENGINEER
JEFFREY H. ANDERSON
Exp. 06/30/2015
Electrical Engineer
STATE OF CALIFORNIA

Pristine Sun
PRISTINE SUN, LLC
649 Mission Street, 5th Floor,
San Francisco, CA 94105
JOB NUMBER: 10210

REVISIONS

#	DATE	ISSUE
A	22-MAY-13	FOR SUBMITTAL
B	27-JUN-13	AHJ COMMENTS
C	02-AUG-13	FOR RESUBMITTAL
D	21-OCT-13	PHASE 2- UPDATE

DRAWN BY: NATRON
CHECKED BY: JHA
APPROVED BY: JHA
DOCUMENT DATE: 10/17/2013

SCALE: NTS

SHEET TITLE: WIRING SCHEDULE

SHEET #: E.4.1

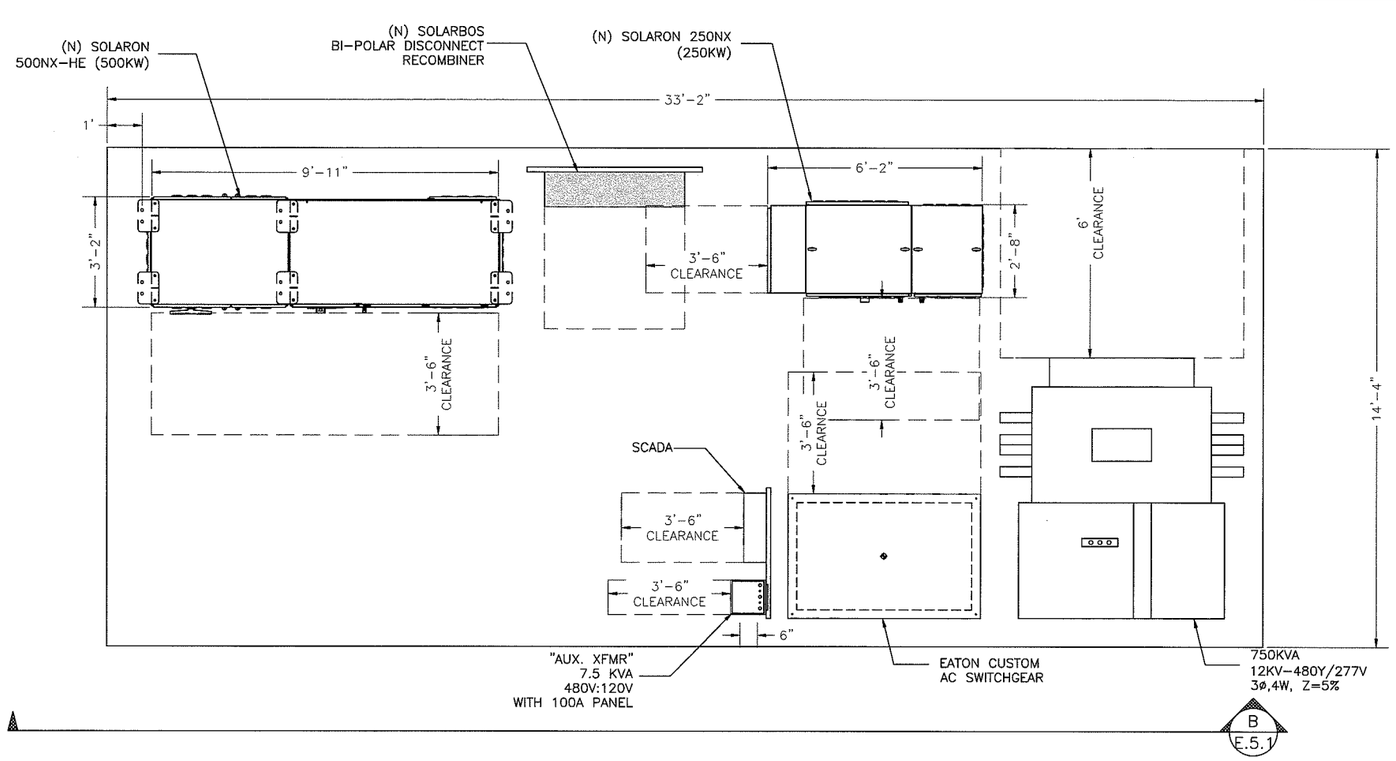

A EQUIPMENT LAYOUT PLAN
SCALE: 1/2"=1'-0"

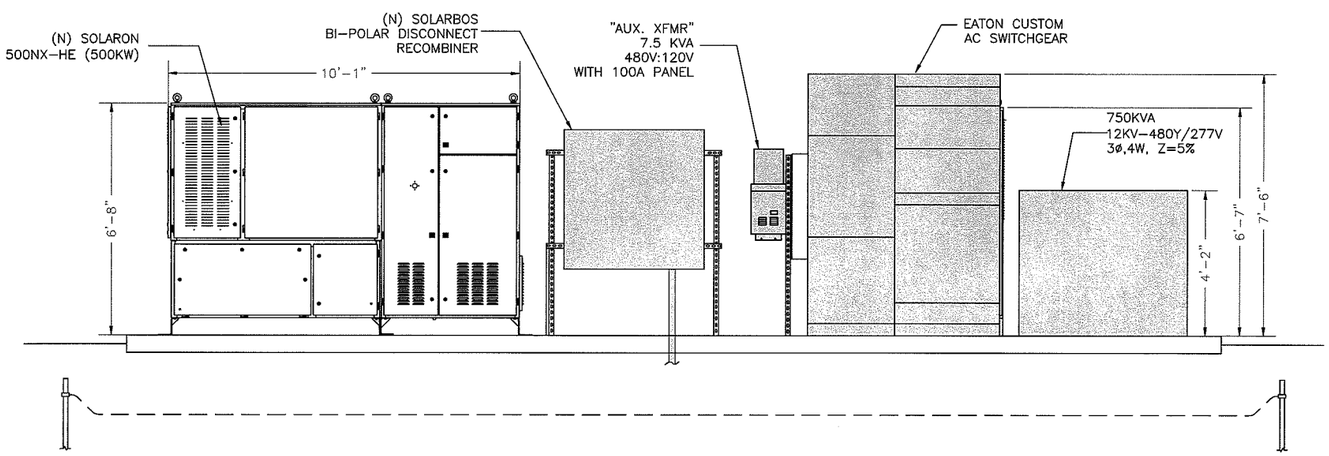

B EQUIPMENT FRONT ELEVATION
SCALE: 1/2"=1'-0"

PAD DESIGN:
3000 PSI CONCRETE 12" THICK
#4 REBAR 12" O.C. 3" MIN FROM PAD EDGE
PAD LAID ON 95% COMPACTED SOIL WITH 3" CRUSHED ROCK

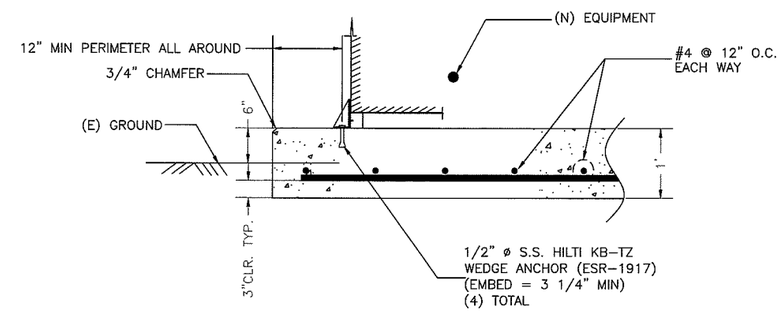

C EQUIPMENT PAD DETAIL
SCALE: 1"=1'-0"

PROJECT TITLE:
2103-HILL
5475 JACK CREEK RD.
TEMPLETON, CA 93465
APN: 039-191-03-5

ENGINEER'S STAMP
REGISTERED PROFESSIONAL ENGINEER
JEFFREY H. HARRIS
No. 15688
Exp. 06/30/2015
Electrical
STATE OF CALIFORNIA

Pristine Sun
PRISTINE SUN, LLC
649 Mission Street, 5th Floor,
San Francisco, CA 94105
JOB NUMBER: 10210

REVISIONS

#	DATE	ISSUE
A	22-MAY-13	FOR SUBMITTAL
B	27-JUN-13	AHJ COMMENTS
C	02-AUG-13	FOR RESUBMITTAL
D	21-OCT-13	PHASE 2- UPDATE

DRAWN BY:	NATRON
CHECKED BY:	JHA
APPROVED BY:	JHA
DOCUMENT DATE:	10/17/2013

SCALE:
VARIOUS

SHEET TITLE:
EQUIPMENT LAYOUT PLAN

SHEET #:
E.5.1

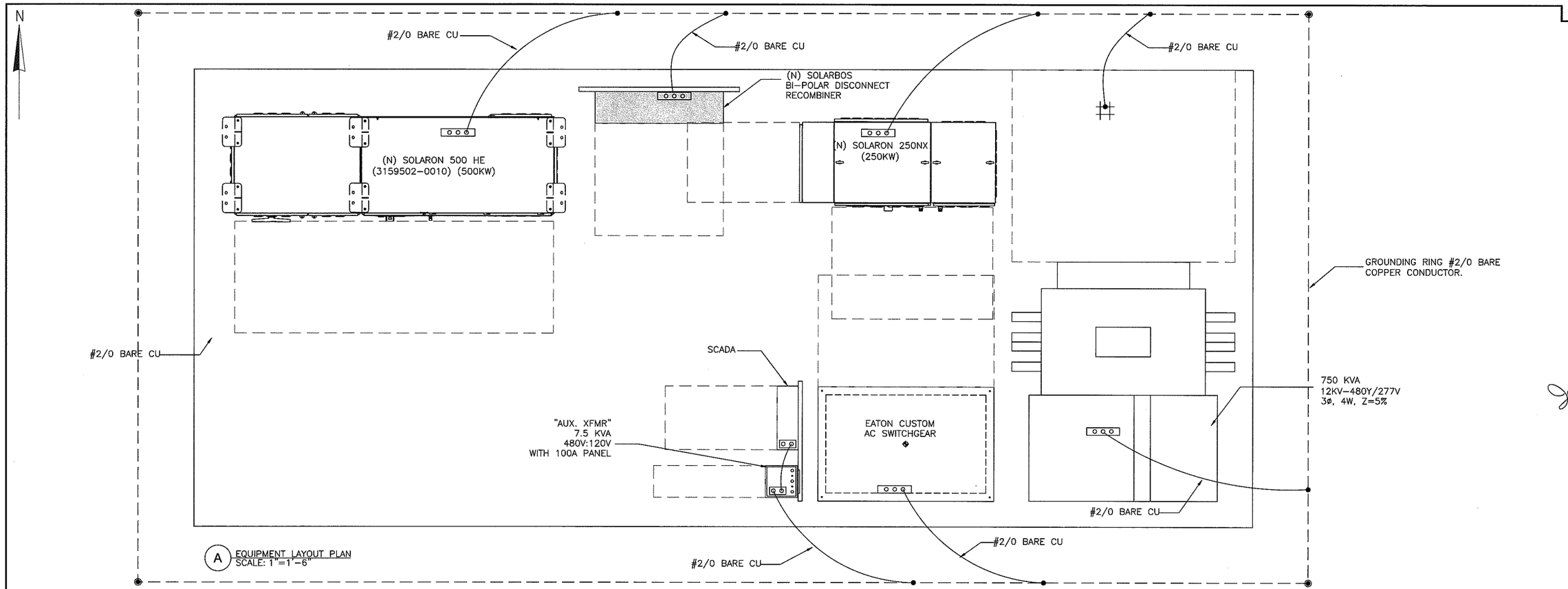

A EQUIPMENT LAYOUT PLAN
SCALE: 1"=1'-6"

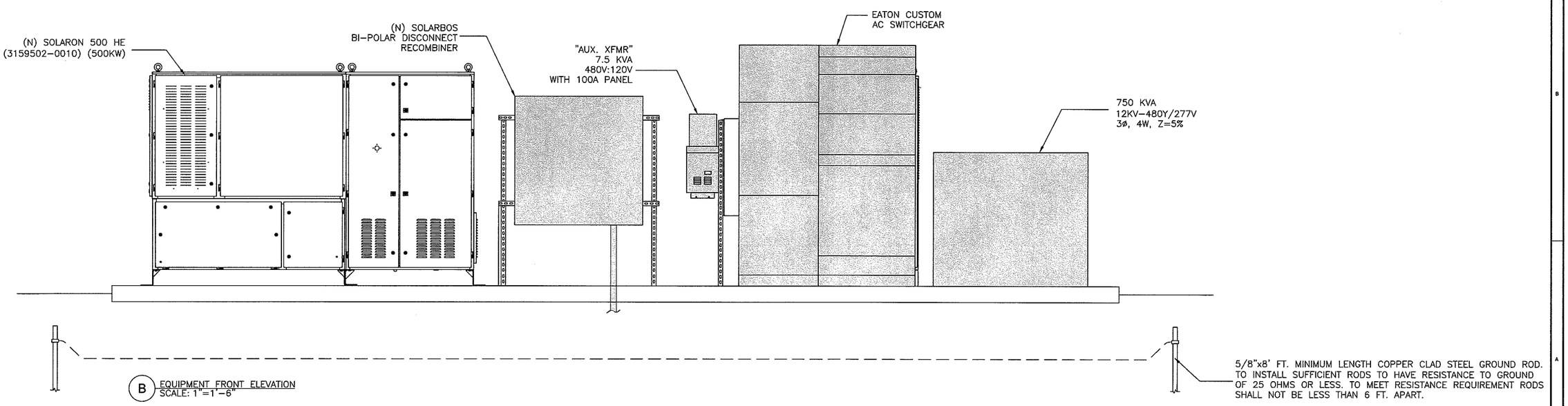

B EQUIPMENT FRONT ELEVATION
SCALE: 1"=1'-6"

PROJECT TITLE:

2103-HILL
5475 JACK CREEK RD.
TEMPLETON, CA 93465
APN: 039-191-03-5

ENGINEER'S STAMP

Pristine Sun
PRISTINE SUN, LLC
649 Mission Street, 5th Floor,
San Francisco, CA 94105

JOB NUMBER: 10210

REVISIONS

#	DATE	ISSUE
A	22-MAY-13	FOR SUBMITTAL
B	27-JUN-13	AHJ COMMENTS
C	02-AUG-13	FOR RESUBMITTAL
D	21-OCT-13	PHASE 2- UPDATE

DRAWN BY:	NATRON
CHECKED BY:	JHA
APPROVED BY:	JHA
DOCUMENT DATE:	10/17/2013

SCALE:
1"=1'-6"

SHEET TITLE:
EQUIPMENT LAYOUT PLAN (GROUNDING DETAIL)

SHEET #:
E.5.2

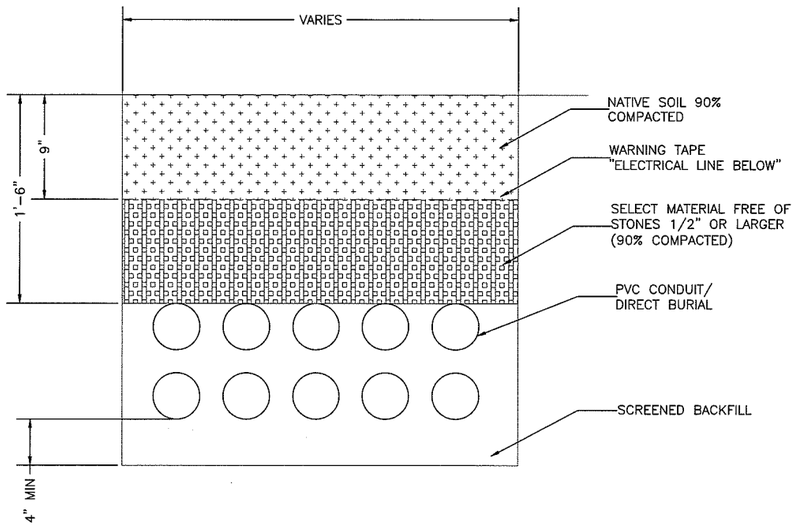

A TRENCH DETAIL DC/AC DIRECT BURIAL
SCALE: 2"=1'-0"

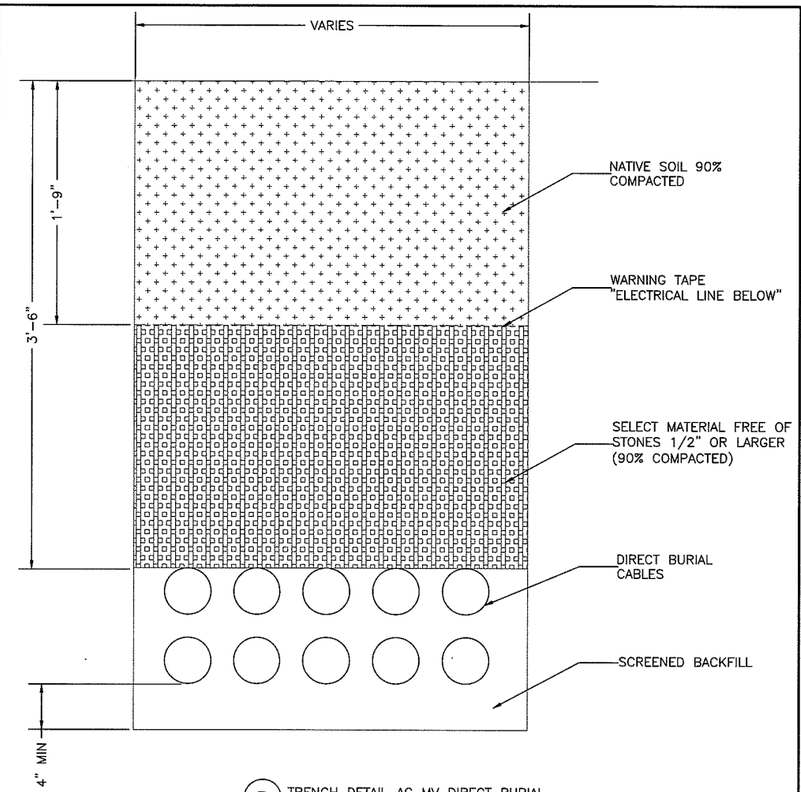

B TRENCH DETAIL AC MV DIRECT BURIAL
SCALE: 2"=1'-0"

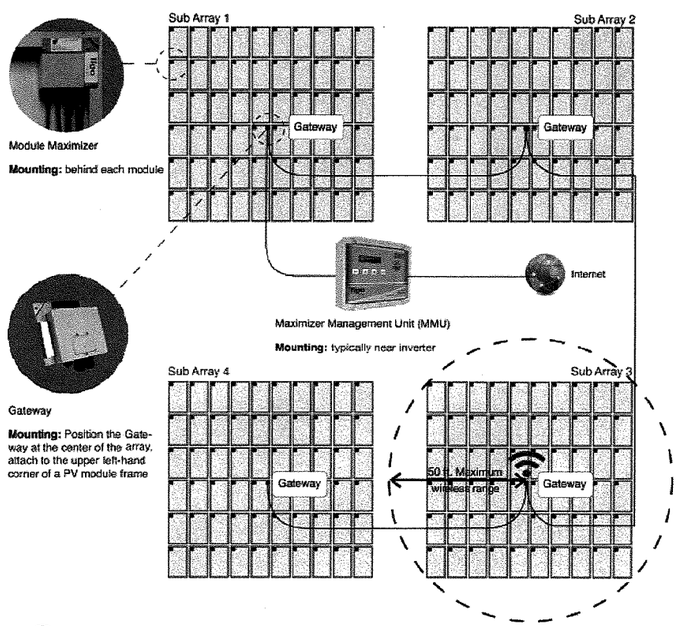

C TIGO INSTALLATION DETAIL
SCALE: NTS

PROJECT TITLE:

2103-HILL
5475 JACK CREEK RD.
TEMPLETON, CA 93465
APN: 039-191-03-5

ENGINEER'S STAMP

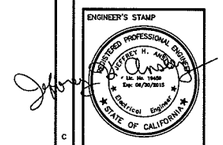

Pristine Sun
PRISTINE SUN, LLC
649 Mission Street, 5th Floor,
San Francisco, CA 94105
JOB NUMBER: 10210

#	DATE	ISSUE
A	22-MAY-13	FOR SUBMITTAL
B	27-JUN-13	JHA COMMENTS
C	02-AUG-13	FOR RESUBMITTAL
D	21-OCT-13	PHASE 2- UPDATE

REVISIONS

DRAWN BY:	NATRON
CHECKED BY:	JHA
APPROVED BY:	JHA
DOCUMENT DATE:	10/17/2013

SCALE: NTS

SHEET TITLE: ELECTRICAL DETAILS-1

SHEET #: E.6.1

SYSTEM OVERVIEW

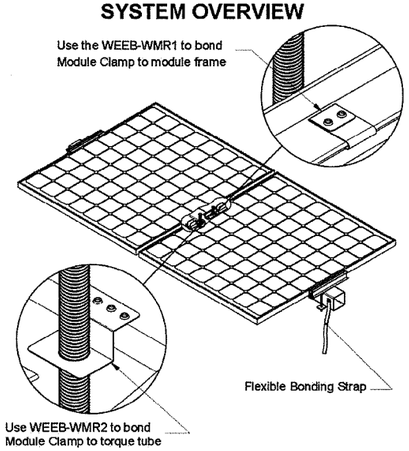

Important notes

1. **Use general purpose anti-seize compound on fastener threads when installing WEEBs.**
2. **The NEC section 690.43 states, "Exposed non-current carrying metal parts of module frames, equipment, and conductor enclosures shall be grounded in accordance with 250.134 or 250.136(A) regardless of voltage."**
3. **WEEBs are intended for SINGLE USE ONLY. Functionality will not be guaranteed if reused.**

(A) GROUNDING DETAIL
SCALE: NTS

PANEL GROUNDING:

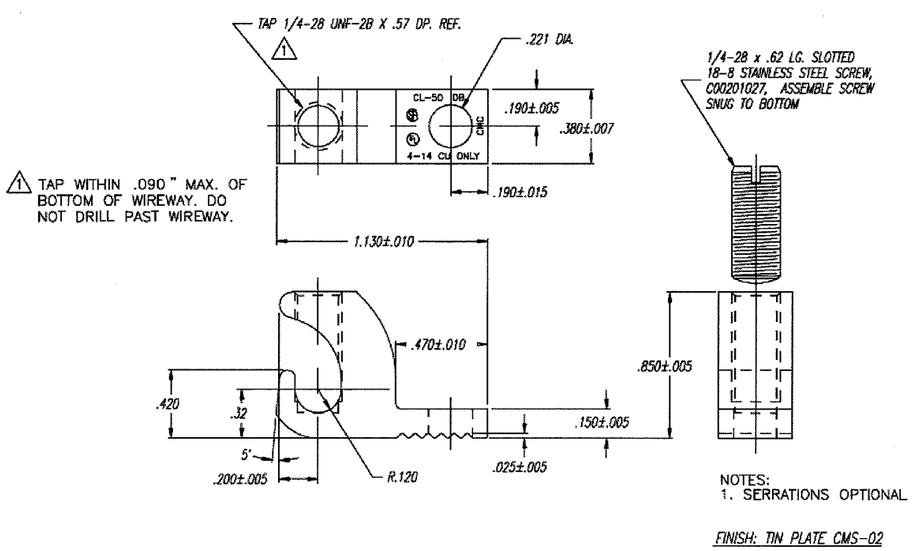

(C) ATI PANEL GROUNDING DETAIL
SCALE: NTS

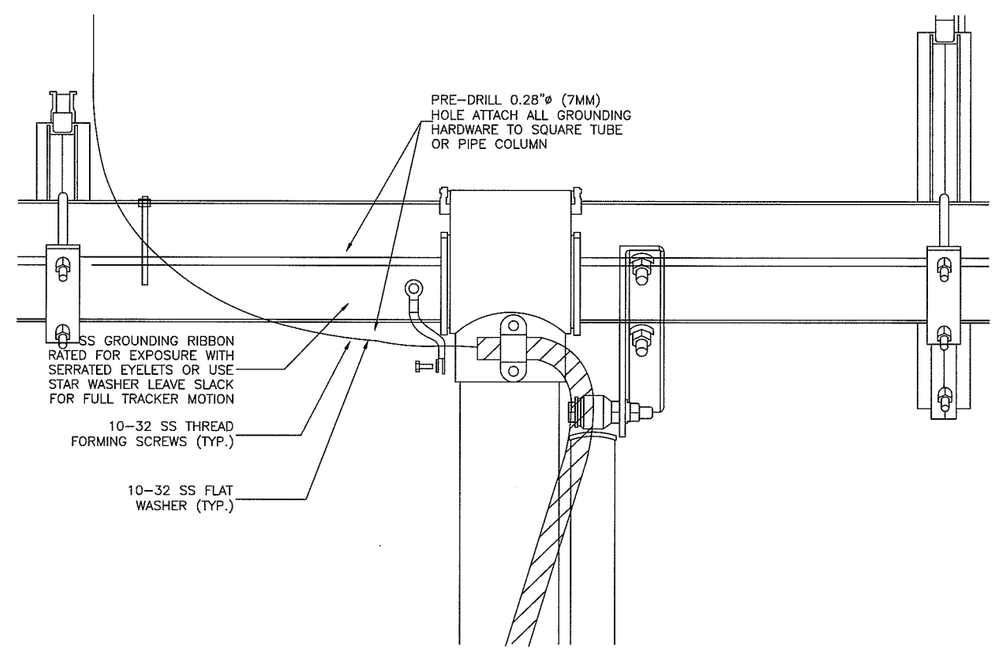

(B) GROUNDING RIBBON
SCALE: NTS

PROJECT TITLE:

2103-HILL
5475 JACK CREEK RD.
TEMPLETON, CA 93465
APN: 039-191-03-5

ENGINEER'S STAMP

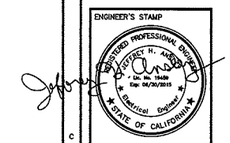

Pristine Sun
PRISTINE SUN, LLC
649 Mission Street, 5th Floor,
San Francisco, CA 94105
JOB NUMBER: 10210

REVISIONS

#	DATE	ISSUE
A	22-MAY-13	FOR SUBMITTAL
B	27-JUN-13	AHJ COMMENTS
C	02-AUG-13	FOR RESUBMITTAL
D	21-OCT-13	PHASE 2- UPDATE

DRAWN BY:	NATRON
CHECKED BY:	JHA
APPROVED BY:	JHA
DOCUMENT DATE:	10/17/2013

SCALE: NTS

SHEET TITLE: ELECTRICAL DETAILS-2

SHEET #: E.6.2

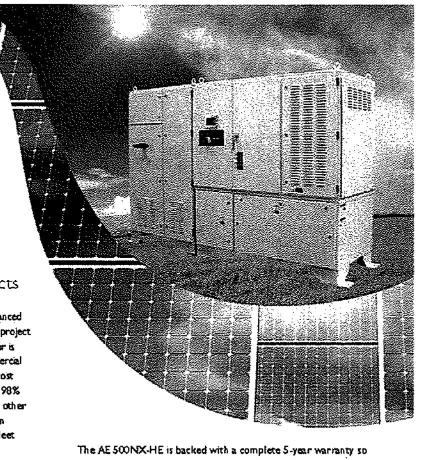

ADVANCED ENERGY

AE 500NX-HE

(Formerly known as Solaron 500 HE)

Reliable inverter solution with record-breaking effiency for large commercial and utility-scale projects

With the best in power-class 98% CEC efficiency rating, Advanced Energy's AE 500NX-HE generates more power and value for project developers, owners and financiers. This highly efficient inverter is specifically designed to meet the requirements of large commercial and utility-scale solar power plants with the lowest levelized cost of energy (LCOE) investors demand and expect. With a true 98% weighted efficiency without carve-outs for auxiliary power or other adjustments, the AE 500NX-HE drives higher, faster return on investment (ROI). Energy harvest is further maximized with fleet availability in excess of 99%.

The smallest footprint per kW and its robust, outdoor ready design eliminates the need for inverter enclosures even in harsh environments. Installation is simplified with an optional integrated DC master combiner and fusing area that saves time and materials. Plus, being the lightest inverter per kW as well as having the smallest footprint per kW means the AE 500NX-HE is simple to maneuver and put in place ensuring your project stays on schedule. The stable, high-voltage, tranformerless engine allows several units to be connected in parallel to a single medium-voltage transformer further reducing the upfront balance of system (BoS) costs and improving LCOE. No step-up transformer and fewer medium-voltage transformers are required when you select AE.

AE's product development process ensures the Service and Reliability departments are involved to simplify ongoing operations and maintenance (O&M). The robust, outdoor-ready design is used in a variety of environments – from the high desert mountains to the Pacific tropics. The AE 500NX-HE runs reliably day in and day out with a NEMA 3R construction and a completely sealed electronics cabinet that is designed to NEMA 4 standards and is continuously cooled by a self-contained, liquid-to-air system.

SCADA connectivity, collecting and storing a wide range of inverter real-time data, and connecting to many third-party data services is achieved with the integrated data monitoring solution – included at no additional charge.

AE Solar Energy is a US based company.

The AE 500NX-HE is backed with a complete 5-year warranty so there are no surprises during the warranty period. An extended 20-year warranty is available as an option. The AE warranty options provide peace of mind and are backed by the best service and support team in the business.

Lower Operational LCOE

- Increased energy harvest with with 98% weighted efficiency
- Increased availability with >99% monitored fleet availability
- Legendary service and response

Reduce BoS Component of LCOE

- Lightest weight per kW reduces shipping costs to the site
- Smallest footprint per kW reduces site preparation costs
- Integrated DC master combiner and fusing area
- Parallel connections to a single, medium-voltage transformer

Minimize Ongoing O&M Component of LCOE

- Robust, outdoor-ready construction
- High, field-proven fleet availability of >99% for monitored units
- Simplify site maintenance with SiteGuard® (available option)

Take Control and Support the Grid

- Integrated data monitoring solution transmits inverter data for secure collection
- Integrated data monitoring solution receives and acts upon a host of utility level commands

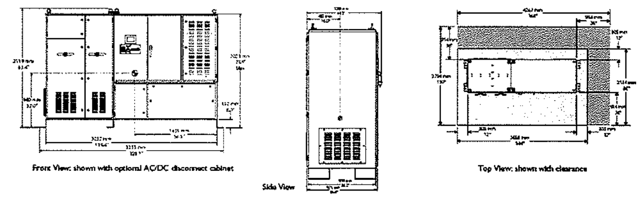

AE 500NX-HE Summary Specifications*

Physical	
Weight	3760 lb (1705.5 kg) unit weight, 4100 lb (1859.7 kg) shipping weight
Construction	Outdoor-ready cabinet design with electrostatically applied paint
Environmental Rating	NEMA 3R with sealed electronics cabinet
DC Input Power Connectors	Compression type terminal block with up to (4) 500 MCM wires (Cu or Al)
AC Output Power Connectors	Compression type terminal block with up to (4) 500 MCM wires (Cu or Al)
User Interface	Front panel LCD, keypad, shutdown button, and web interface
Electrical	
Array Configuration	Separable dual arrays with 600 VDC strings
Maximum Operating Input Current	750 ADC Imp maximum, self-limiting in operation
MPPT Voltage Range	± 600 Voc maximum, ± 330 to ± 550 Vmp
Open-Circuit Turn-On Voltage	± 425 VDC default
Continuous Output Power	500 kW at 480 VAC
Operating Voltage Range	480 VAC ± 10%
Electrical Service Compatibility	3 phase, 3 wire, grounded Wye connection
Maximum Continuous Current	667 Arms (configurable)
Short Circuit Fault Current	667 Arms, 16 ms at 432 VAC
Nominal Frequency	60 Hz
Total Harmonic Distortion	<2% at full power, 480 VAC
Peak Efficiency	98.7% (includes brown power such as all standby, controls, and housekeeping losses)
Weighted Efficiency	98% (CEC method)
Standby Losses	< 100 W
Inverter Controls and Monitoring	
Inverter On/Off	Remotely controllable
Turn-On Ramp Rate	100 kW/sec maximum; adjustable at 0.1% increments
Reconnection Delay	5 to 300 sec, adjustable
Active Power Range	500 kW to 1 kW; remotely adjustable set point at 1 kW increments
Power Factor & Reactive Power**	>.99 at rated power; ±0.95 PF range, ±164 kVAr maximum
Over-Voltage Response	110% ≤ VAC < 120%: 0.16 to 5.0 sec configurable, 2.0 seconds default
Frequency Ride-Through Limits	Configurable to regional requirements
Communication Interfaces and Protocols	RS-232, RS-422, and RS-485, Ethernet, PCMCIA expansion slot Modbus/TCP and Modbus/RTU
Inverter Monitoring Options	Integrated inverter data monitoring solution, compatible with third-party services
Data Storage	10 years at 1 minute invervals with SD card
Environmental	
Operating Ambient Temp. Range	-4 °F to 122 °F (-20 °C to 50 °C) -31 °F to 122 °F (-35 °C to 50 °C) cold weather option
Standby / Storage Temp. Range	-22 °F to 158 °F (-30 °C to 70 °C)
Cooling	Self-contained, closed-loop, liquid to air
Relative Humidity	0% to 95% non-condensing
Elevation	6562' (2000 m) maximum
Regulatory	
Agency Approvals / Regulatory Compliance	NRTL certified to UL 1741-2010 by CSA International IEEE 519, 929, 1547/1547.1 NEC Article 690 (compatible)

Subject to change without notice. Refer to user manual for detailed specification.
*Note: Not all performance window specifications can be achieved simultaneously. Performance varies per site. Consult your AE sales or service representatives for specific PV system design questions at sales.support@aei.com.
**Reactive Power control modes pending inclusion in UL 1741-2010 certification

Utility Interactive Controls

- Power Factor
- Controlled ramp rate
- Remote enable/disable
- Power curtailment

Options

- 2, 3 or 4-unit PowerStation
- AC disconnect switch
- Remote PV Tie
- Cold-weather option
- Low frequency ride-through
- 16 and 20 channel subarray monitoring
- 20-year extended warranty
- Preventative maintenance programs (refer to SafeGuard®, SafeGuard Plus℠ and SiteGuard® data sheets for more information)

ADVANCED ENERGY
AE Solar Energy • 20720 Brinson Blvd • Bend, OR 97701 U.S.A.
www.advanced-energy.com/solarenergy
877 312 3832 • sales.support@aei.com • invertersupport@aei.com
Please see www.advanced-energy.com for worldwide contact information

© Advanced Energy Industries, Inc. 2012
All rights reserved. Printed in U.S.A.
SafeGuard Plus is a U.S. service mark of Advanced Energy Industries, Inc. Advanced Energy®, SafeGuard®, and SiteGuard® are U.S. trademarks of Advanced Energy Industries, Inc.

SF260 | Poly

Hanwha Solar

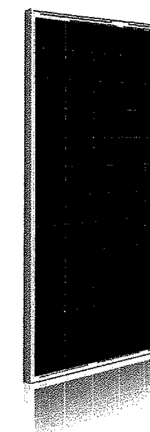

Five Key Features

1. Guaranteed quality: 12 year product warranty, 25 year performance warranty *
2. Predictable output: Positive power sorting of 0 to + 5 W
3. Innovative solutions: Anti-reflecting coating for high sunlight absorption
4. Robust design: Module certified to withstand high snow loads, up to 5.4 kN/m² **
5. Long term responsibility: Free module recycling in PV Cycle member countries

* Please refer to Hanwha SolarOne Co., Ltd. Product Warranty for details.
** Please refer to Hanwha SolarOne Co., Ltd. module installation Guide.

Quality and Environmental Certificates

- ISO 9001 quality standards and ISO 14001 environmental standards
- OHSAS 18001 occupational health and safety standards
- IEC 61215 and IEC 61730 Class A certifications
- Conformity to CE

About Hanwha SolarOne Co., Ltd.

Hanwha SolarOne Co., Ltd. is a vertically integrated manufacturer of photovoltaic modules designed to meet the needs of the global energy consumer.

- High reliability, guaranteed quality, and excellent cost-efficiency due to vertically integrated production and control of the supply chain;
- Optimization of product performance and manufacturing processes through a strong commitment to research and development;
- Global presence throughout Europe, North America, and Asia, offering regional technical and sales support.

Hanwha Solar

SF260 | Poly

Electrical Characteristics

Electrical Characteristics at Standard Test Conditions (STC)

Power Class	270 W	275 W	280 W	285 W	290 W	295 W
Maximum Power (P_{max})	270 W	275 W	280 W	285 W	290 W	295 W
Open Circuit Voltage (V_{oc})	44.0 V	44.1 V	44.3 V	44.5 V	44.7 V	44.9 V
Short Circuit Current (I_{sc})	8.20 A	8.35 A	8.40 A	8.45 A	8.50 A	8.55 A
Voltage at Maximum Power (V_{mpp})	36.0 V	36.1 V	36.1 V	36.2 V	36.3 V	36.4 V
Current at Maximum Power (I_{mpp})	7.50 A	7.62 A	7.76 A	7.87 A	7.99 A	8.11 A
Module Efficiency (%)	13.7%	14.0%	14.3%	14.5%	14.7%	15.0%
Cell Efficiency (%)	15.5%	15.8%	16.0%	16.2%	16.5%	16.8%

P_{max}, V_{oc}, I_{sc}, V_{mpp} and I_{mpp} tested at STC defined as irradiance of 1000 W/m² at AM 1.5 solar spectrum and temperature 25 ± 2 °C. Electrical Characteristics measurement tolerance of ± 3%.

Electrical Characteristics at Normal Operating Cell Temperature (NOCT)

Power Class	270 W	275 W	280 W	285 W	290 W	295 W
Maximum Power (P_{max})	197 W	200 W	204 W	208 W	211 W	215 W
Open Circuit Voltage (V_{oc})	40.5 V	40.6 V	40.8 V	40.9 V	41.1 V	41.3 V
Short Circuit Current (I_{sc})	6.63 A	6.76 A	6.80 A	6.84 A	6.88 A	6.92 A
Voltage at Maximum Power (V_{mpp})	32.7 V	32.8 V	32.9 V	33.0 V	33.1 V	33.2 V
Current at Maximum Power (I_{mpp})	6.00 A	6.10 A	6.21 A	6.30 A	6.39 A	6.49 A
Module Efficiency (%)	12.5%	12.7%	13.0%	13.2%	13.4%	13.7%
Cell Efficiency (%)	15.5%	15.8%	16.0%	16.2%	16.5%	16.8%

P_{max}, V_{oc}, I_{sc}, V_{mpp} and I_{mpp} tested at NOCT defined as irradiance of 800 W/m², wind speed 1 m/s. Electrical Characteristics measurement tolerance of ± 3%.

Temperature Characteristics

Normal Operating Cell Temperature (NOCT)	45 °C ± 3 °C
Temperature Coefficients of P	- 0.45 %/°C
Temperature Coefficients of V	- 0.32 %/°C
Temperature Coefficients of I	+ 0.04 %/°C

Maximum Ratings

Maximum System Voltage	1000 V (IEC)
Series Fuse Rating	15 A
Maximum Reverse Current	Series fuse rating multiplied by 1.35

Mechanical Characteristics

Dimensions	1966 mm × 1000 mm × 50 mm
Weight	26 kg
Frame	Aluminum alloy
Front	Tempered glass
Encapsulant	EVA
Back Cover	Composite sheet
Cell Technology	Polycrystalline
Cell Size	156 mm × 156 mm
Number of Cells (Pieces)	72 (6 × 12)
Junction Box	Protection class IP65 with bypass-diode
Output Cables	Solar cable: 4 mm²; length 1200 mm
Connector	Linyang LY0706-2

System Design

Operating Temperature	- 40 °C to 85 °C
Hail Safety Impact Velocity	25 mm at 23 m/s
Fire Safety Classification (IEC 61730)	Class C
Static Load Wind/Snow	2400 Pa/5400 Pa

Packaging and Storage

Storage Temperature	- 40 °C to 85 °C
Packaging Configuration	20 pieces per pallet
Loading Capacity (40 ft. HQ Container)	440 pieces

Nomenclature
Full product name:
SF260-36-1Pxxx
xxx represents the power class

Performance at Low Irradiance:
The typical relative change in module efficiency at an irradiance of 200 W/m² in relation to 1000 W/m² (both at 25 °C and AM 1.5 spectrum) is less than 5%.

Various Irradiance Levels

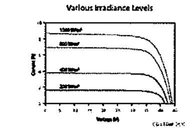

Basic Design

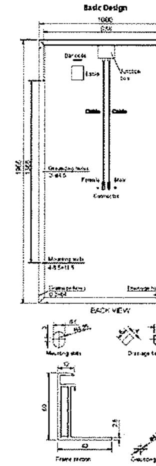

Hanwha Solar

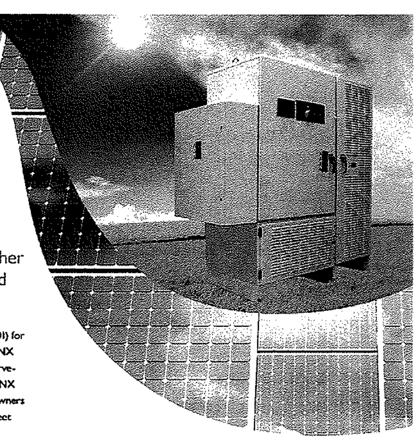

ADVANCED ENERGY

AE 250NX

(Formerly known as Solaron 250)

Reliable inverter solution with higher efficiency for large commercial and utility-scale projects

Achieve higher, faster PV system return on investment (ROI) for large commercial projects with Advanced Energy's AE 250NX inverter. With a true 97.5% weighted efficiency without carve-outs for auxiliary power or other adjustments, the AE 250NX generates more power and value for project developers, owners and financiers. Energy harvest is maximized further with fleet availability in excess of 99%.

Eliminate the need for enclosures even in harsh environments with its robust, outdoor ready design that reduces upfront balance of system (BoS) costs. Plus, being the lightest inverter per kW as well as having the smallest footprint per kW means the AE 250NX is simple to maneuver and put in place ensuring your project stays on schedule. The stable, high-voltage, tranformerless engine allows several units to be connected in parallel to a single medium-voltage transformer reducing the upfront balance of system (BoS) and improving LCOE. No step-up transformer and fewer medium-voltage transformers are required when you select AE inverters.

AE's product development process ensures the Service and Reliability departments are involved to simplify ongoing operations and maintenance (O&M). The AE 250NX design is used in a variety of environments from the high desert mountains to the Pacific tropics. It runs reliably day in and day out with a NEMA 3R construction and a completely sealed electronics cabinet that is designed to NEMA 4 standards and is continuously cooled by a self-contained, liquid-to-air system.

SCADA connectivity, collecting and storing a wide range of inverter real-time data, and connecting to many third-party data services is achieved with an integrated data monitoring solution included at no additional charge.

The AE 250NX is backed with a complete 5-year warranty so there are no surprises during the warranty period. An extended 20-year warranty is available as an option. The AE warranty options provide peace of mind and are backed by the best service and support team in the business.

Lower Operational LCOE

- Increased energy harvest with with 97.5% weighted efficiency
- Increased availability with >99% monitored fleet availability
- Legendary service and response

Reduce BoS Component of LCOE

- Lightest weight per kW reduces shipping costs to the site
- Smallest footprint per kW reduces site preparation costs
- Integrated DC master combiner and fusing area
- Parallel connections to a single, medium-voltage transformer

Minimize Ongoing O&M Component of LCOE

- Robust, outdoor-ready construction
- High, field-proven fleet availability of >99% for monitored units
- Simplify site maintenance with SiteGuard® (available option)

Take Control and Support the Grid

- Integrated data monitoring solution transmits inverter data for secure collection
- Integrated data monitoring solution receives and acts upon a host of utility level commands

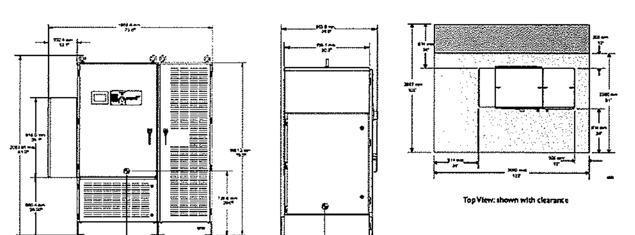

AE 250NX Summary Specifications

Physical	
Weight	2045 lb (927.5 kg) unit weight, 2344 lb (1063.2 kg) shipping weight
Construction	Outdoor-ready cabinet design with electrostatically applied paint
Environmental Rating	NEMA 3R with sealed electronics cabinet
DC Input Power Connectors	Compression type terminal block with up to (16) 2/0 wires (Cu or Al)
AC Output Power Connectors	Compression type terminal block with up to (2) 500 MCM wires (Cu or Al)
User Interface	Front panel LCD, keypad, and shut-down button, and web interface
Electrical	
Array Configuration	Separable dual arrays with 600 VDC strings
Maximum Operating Input Current	375 ADC Imp maximum, self-limiting in operation
MPPT Voltage Range	± 600 Voc maximum, ± 330 to ± 550 Vmp
Open-Circuit Turn-On Voltage	± 425 VDC default
Continuous Output Power	250 kW at 480 VAC
Operating Voltage Range	480 VAC ± 10%
Electrical Service Compatibility	3 phase, 3 wire, grounded Wye connection
Maximum Continuous Current	334 Arms (field adjustable)
Nominal Frequency	60 Hz
Total Harmonic Distortion	< 5% at 250 kW, 480 VAC
Peak Efficiency	98.1% (includes brown power such as all standby, controls, and housekeeping losses)
Weighted Efficiency	97.5% (CEC method)
Standby Losses	< 100 W
Inverter Controls and Monitoring	
Active Power Range	250 kW to 1 kW, remotely adjustable set point at 1kW increments
Reactive Power	0.99 typical, + 100 to -125 kVAr maximum
Communication Interfaces and Protocols	RS-232, RS-422, and RS-485, Ethernet, PCMCIA expansion slot Modbus/TCP and Modbus/RTU
Inverter Monitoring Options	Integrated inverter data monitoring solution, compatible with third-party services
Data Storage	10 years at 1 minute invervals with SD card
Environmental	
Operating Ambient Temp. Range	-4 °F to 122 °F (-20 °C to 50 °C)
Standby / Storage Temp. Range	-22 °F to 158 °F (-30 °C to 70 °C)
Cooling	Self-contained, closed-loop, liquid to air
Relative Humidity	0% to 95% non-condensing
Elevation	6562' (2000 m) maximum
Regulatory	
Agency Approvals / Regulatory Compliance	NRTL certified to UL 1741-2010 by CSA International IEEE 519, 929, 1547/1547.1 NEC Article 690 (compatible)
Inverter Warranty	5 years

Subject to change without notice. Refer to user manual for detailed specification.

Options

- 2, 3 or 4-unit PowerStation
- Remote PV Tie
- 20-year extended warranty
- Inverter installation verification
- SafeGuard® PM program
- SafeGuard Plus℠ availability program
- SiteGuard O&M services

ADVANCED ENERGY
Advanced Energy Industries, Inc. • 20720 Brinson Blvd • Bend, OR 97701 U.S.A.
AE Solar Energy: www.advanced-energy.com/solarenergy
877 312 3832 • sales.support@aei.com • invertersupport@aei.com
Please see www.advanced-energy.com for worldwide contact information

© Advanced Energy Industries, Inc. 2012
All rights reserved. Printed in U.S.A.
Advanced Energy®, SafeGuard®, SiteGuard®, and Solaron® are U.S. trademarks of Advanced Energy Industries, Inc. SafeGuard Plus℠ is a U.S. service mark of Advanced Energy Industries, Inc.

Tigo energy

Tigo Energy® Module Maximizer™-ES (MM-ES)

Data Sheet

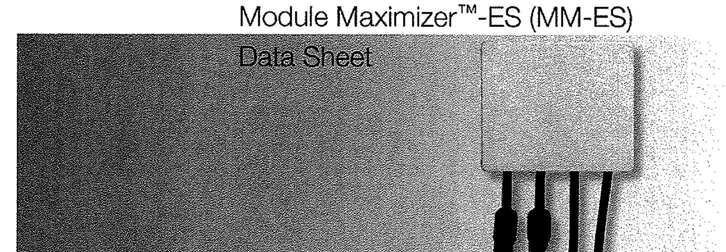

For residential, commercial and utility scale photovoltaic solar arrays, the Tigo Energy® Maximizer™ system optimizes the power output of each module (solar panel); delivers module-level data for operational management and performance monitoring; and provides the ability to deactivate the high voltage DC bus for safer installation, maintenance or fire fighting. Tigo Energy Module Maximizers are key components of the system which reside at each module (one per solar module). The Module Maximizer provides data acquisition, communication to the Tigo Energy® Maximizer™ Management Unit, and energy harvesting control. The very small electronics footprint has been designed to minimize cost and maximize reliability. Tigo Energy Maximizer MM-ES is ideal for the European market and retrofit around the world.

The Tigo Energy output optimization starts with dynamic module balancing – a Module Maximizer (patented) attached to each module manages the energy harvest and sends information to the Maximizer Management Unit for reporting and control. The Tigo Energy Serial Module Maximizer (MM-ES) connects in a series topology. MM-ES maintains best-in-class system conversion efficiencies.

The Tigo Energy Module Maximizer includes a unique technology (patented) which greatly enhances the safety of a PV solar installation. As part of the Tigo Energy Maximizer system, this function can be activated with a safety button or via a remote management console. The system can be installed, maintained or approached by fire personnel without the exposure to voltage levels typically in excess of 400 volts.

The Tigo Energy Module Maximizer is packaged in a NEMA3R enclosure (water and weather resistant), conforms to UL and IEEE safety standards. There are Module Maximizer options to fit any PV module, crystalline silicon or thin-film, regardless of output voltage or nominal power rating.

GREEN BUSINESS BAY AREA

Ask your PV Solar distribution partner for the Tigo Energy Module Maximizer pre-installed on many of their most popular framed solar panels for simple on-site system installation for your new or existing PV system. Also watch for modules that include the Tigo Energy technology fully integrated into the junction-box – available soon from leading PV module manufacturers.

Module Maximizer-ES Technical Specifications

Input data	MM-ES50	MM-ES75	MM-ES110	MM-ES170
Maximum power	350W	350W	350W	350W
Maximum input DC voltage (Voc)	52V	75V	110V	170V
Vmp range *	16-48V	30-65V	30-89V	30-140V
Maximum continuous current (Imp)	9.5A	6.5A	4.7A	2.6A
Maximum input current (Isc)	10A	7.5A	5A	3A
Output Data (DC)				
Maximum output power	350W	350W	350W	350W
Maximum continuous current	9.5A	6.5A	4.7 A	2.6A
Nominal Voltage/range	0 - Voc	0 - Voc	0 - Voc	0 - Voc

Mechanical Data	
Operating temperature range	-30°C +70°C
Cooling	Natural Convection
Enclosure environmental rating	IP-65, NEMA3R
Features	
Compliance	CE per UL1741 FCC part 15, class B EN 61000
Panel connector	NEC 2008 compliant MC4 compatible (for retrofit) MC3 connectors
Bus connector	NEC 2008 compliant 40AMP

Optimize the energy harvest of your PV system using the Tigo Energy Maximizer to:

- accelerate system payback
- maximize the power output of individual modules
- reconsider previously rejected projects because of unfavorable shade or orientation
- maintain best-in-class conversion efficiency
- manage the system with module-level data to minimize operational costs and keep the system at peak performance throughout its lifetime
- introduce an unprecedented level of safety for new and existing PV solar installations (patented)
- simplify the balance-of-system design, especially for high Voc or thin-film modules

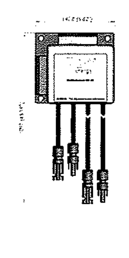

Tigo energy
Tigo Energy, Inc.
P +1.408.402.0802 | F +1.408.358.6279
420 Blossom Hill Road, Los Gatos, CA 95032 U.S.A.
www.tigoenergy.com
contact@tigoenergy.com

Printed on recycled paper

PROJECT TITLE:
2103-HILL
5475 JACK CREEK RD.
TEMPLETON, CA 93465
APN: 039-191-03-5

ENGINEER'S STAMP
REGISTERED PROFESSIONAL ENGINEER
JEFFREY H. ANSON
Lic. No. 19468
Exp: 06/30/2015
Electrical Engineer
STATE OF CALIFORNIA

Pristine Sun
PRISTINE SUN, LLC
649 Mission Street, 5th Floor,
San Francisco, CA 94105
JOB NUMBER: 10210

REVISIONS

#	DATE	ISSUE
A	22-MAY-13	FOR SUBMITTAL
B	27-JUN-13	AHJ COMMENTS
C	02-AUG-13	FOR RESUBMITTAL
D	21-OCT-13	PHASE 2- UPDATE

DRAWN BY:	NATRON
CHECKED BY:	JHA
APPROVED BY:	JHA
DOCUMENT DATE:	10/17/2013

SCALE: NTS

SHEET TITLE: SPEC SHEETS-1

SHEET #: E.7.1

SOLAR BOS

310 Stealth Court, Livermore, CA 94551
925.456.7744 | www.solarbos.com

Disconnect Combiners

SolarBOS now offers combiners with integrated load-break 600 VDC and 1000 VDC disconnects. This allows installers to further reduce system costs by merging the combiner box with the disconnect switch into one product.

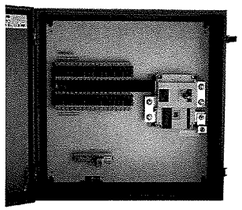

SolarBOS Disconnect Combiner
CS400-36-15-N3

PRODUCT FEATURES:

- ETL listed to UL-1741
- 6 to 36 input circuits
- 100, 200, 250 and 400 amp integrated disconnects
- 90C output terminals
- NEMA-3R, 4 & 4X rated enclosure options
- Steel or fiberglass enclosures
- Rated for 600 VDC or 1000 VDC and continuous duty
- Touch-safe fuse holders
- Cover doors with poured-in-place seamless gaskets
- Configured for both positive and negative grounded arrays
- Clean design for ample wiring room

A New Standard in Safety

SolarBOS disconnect combiners can be specified with up to 36 input circuits with a variety of switch sizes up to 400 amps and NEMA-3R, 4, or 4X enclosures. All combiner enclosures come with complete gasketed seals for better protection from the elements as well as plenty of wiring room for ease of installation.

Made in California

SolarBOS products are designed and manufactured with the system integrator in mind, using the highest quality components to ensure long-term field reliability. All products are assembled in our ETL certified facility in Livermore, California, and we guarantee customer satisfaction.

Configure your BOS Solutions Online:
www.solarbos.com

BALANCE OF SYSTEM PRODUCTS FOR THE SOLAR INDUSTRY

SOLAR BOS

310 Stealth Court, Livermore, CA 94551
925.456.7744 | www.solarbos.com

Disconnect Combiner Specifications

SolarBOS combiners offer many configuration options, including number of input circuits, number of output terminals and enclosure type.

Due to the flexibility of SolarBOS products, part numbers reflect the specific construction of the combiners. Please contact SolarBOS directly for help specifying a combiner for your application.

Disconnect Ampacity	100 Amps			200 Amps			250 Amps			400 Amps	
Number of Input Circuits	6 to 24			6 to 36			8 to 36			8 to 36	
Input Conductor Size (Cu AWG)	#14 to 4			#14 to 4			#14 to 4			#14 to 4	
Max Fuse Size (Amps)	30			30			30			30	
Max Rated Current (ADC Continuous)	100			200			250			400	
Number of Output Conductors	1			1			1			1	
Output Conductor Size Range (Cu or Al AWG)	#6 to 350			#6 to 350			#6 to 350			#2 to 600	
Steel Enclosure Dimensions (Inches)	20x20x6	24x24x6		20x20x6	24x24x6		20x20x6	24x24x6		24x24x6	30x30x8
Approx. Weight (Powder Coated or Stainless Steel)	50 lbs			55 lbs			55 lbs			95 lbs	
Fiberglass Enclosure Internal Dimensions (Inches)	18x16x8	24x20x8	24x24x8	18x16x8	24x20x8	24x24x8	18x16x8	24x20x8	24x24x8	24x24x8	36x30x8
Enclosure NEMA Ratings	3R / 4 / 4X			3R / 4 / 4X			3R / 4 / 4X			3R / 4 / 4X	

SolarBOS Part Numbers

A common part number for a disconnect combiner is a **CS200-12-15-N3.** This reads as a combiner, single output, 200 amp disconnect, 12 input circuits with 15-amp fuses and NEMA-3/3R enclosure. Two example part numbers are explained below:

CS100-04-08-4XF
Combiner, Single output, 100 amp disconnect, 4 circuit, with 8-amp fuses and NEMA-4X fiberglass enclosure

CS400-12-15-N3
Combiner, Single output, 400 amp disconnect, 12 circuit, with 15-amp fuses and NEMA-3/3R steel enclosure

Configure your BOS Solutions Online: www.solarbos.com

ReneSola

Virtus II

156 Series Polycrystalline
Solar Module
300W, 305W, 310W

- High Module Conversion Efficiencies
- Easy Installation and Handling for Various Applications
- Mechanical Load Capability of up to 5400 Pa
- Conforms with IEC 61215:2005, IEC 61730: 2004, UL 1703 PV Standards
- ISO9001, OHSAS18001, ISO14001 Certified
- Application Class A, Safety Class II, Fire Rating C

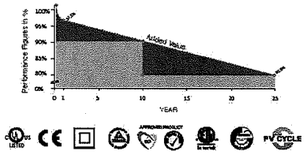

10-year
material & workmanship

25-year
linear power output

ReneSola.com

ReneSola

156 Series Polycrystalline
Solar Module
300W, 305W, 310W

Dimensions

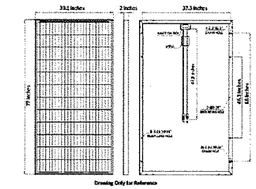

I-V Curves

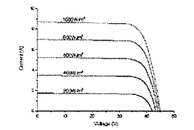

Varied Irradiation Efficiencies

Irradiance	200W/m²	400W/m²	600W/m²	800W/m²	1000W/m²
Efficiency	15.8%	18.3%	18.3%	18.1%	18.0%

Electrical Characteristics STC	JC300M-24/Ab	JC305M-24/Ab	JC310M-24/Ab
Maximum Power (Pmax)	300 W	305 W	310 W
Power Tolerance	0 ~ +5W	0 ~ +5W	0 ~ +5W
Module Efficiency	15.3%	15.7%	16.0%
Maximum Power Current (Imp)	8.20 A	8.33 A	8.33 A
Maximum Power Voltage (Vmp)	36.6 V	36.6 V	37.0 V
Short Circuit Current (Isc)	8.58 A	8.72 A	8.80 A
Open Circuit Voltage (Voc)	44.8 V	44.9 V	45.0 V

Values at Standard Test Conditions STC (Air Mass AM1.5, Irradiance 1000W/m², Cell Temperature 25°C)

Electrical Characteristics NOCT	JC300M-24/Ab	JC305M-24/Ab	JC310M-24/Ab
Maximum Power (Pmax)	223 W	226 W	230 W
Maximum Power Current (Imp)	6.67 A	6.72 A	6.80 A
Maximum Power Voltage (Vmp)	33.4 V	33.6 V	33.8 V
Short Circuit Current (Isc)	7.03 A	7.04 A	7.10 A
Open Circuit Voltage (Voc)	41.9 V	42.0 V	42.1 V

Values at Normal Operating Cell Temperature, Irradiance of 800 W/m², spectrum AM 1.5, ambient temperature 20°C, wind speed 1 m/s

Mechanical Characteristics

Cell type	156 x156 mm Polycrystalline, 72 (6x12) pcs in series
Glass	High Transmission, Low Iron, Tempered Glass
Frame	Anodized Aluminum Alloy
Junction Box	IP65/IP67 rated, with bypass diodes
Dimension	*77 x 39.1 x 2 inches
Output Cable	12 AWG, 47.2 inches
Weight	43.8 lbs
Installation Hole Location	See Drawing Above

Characteristics

Temperature Coefficient of Voc	-0.30%/°C
Temperature Coefficient of Isc	0.04%/°C
Temperature Coefficient of Pmax	-0.40%/°C
Normal Operating Cell Temperature (NOCT)	47°C±2°C

Packing Information

Container	20' GP	40' GP	40' HQ
Pallets per Container	20	24	24
Pieces per Container	360	480	528

Maximum Ratings

Operating Temperature	-40°F ~ + 185°F
Maximum System Voltage	1000VDC (EU) / 600VDC (US)
Maximum Series Fuse Rating	20A (EU) / 25A (US)

No Part of ETL's STC IV Curves Software Is Made Public or Proprietary
COPYRIGHT: All rights reserved. Design and specifications subject to change without prior notice.

ReneSola.com

PROJECT TITLE:

2103-HILL
5475 JACK CREEK RD.
TEMPLETON, CA 93465
APN: 039-191-03-5

ENGINEER'S STAMP

REGISTERED PROFESSIONAL ENGINEER
JEFFREY H. ANDERSON
No. 61 Exp. 06/30/2015
Electrical
STATE OF CALIFORNIA

Pristine Sun
PRISTINE SUN, LLC
649 Mission Street, 5th Floor,
San Francisco, CA 94105
JOB NUMBER: 10210

#	DATE	ISSUE
A	22-MAY-13	FOR SUBMITTAL
B	27-JUN-13	AHJ COMMENTS
C	02-AUG-13	FOR RESUBMITTAL
D	21-OCT-13	PHASE 2- UPDATE

REVISIONS

DRAWN BY:	NATIRON
CHECKED BY:	JHA
APPROVED BY:	JHA
DOCUMENT DATE:	10/17/2013

SCALE: NTS

SHEET TITLE: SPEC SHEETS-2

SHEET #: E.7.2

LABELS AND MARKINGS LEGEND:

(A)

CAUTION

POWER TO THIS SERVICE IS ALSO SUPPLIED FROM THE FOLLOWING SOURCES WITH DISCONNECTS LOCATED AS SHOWN

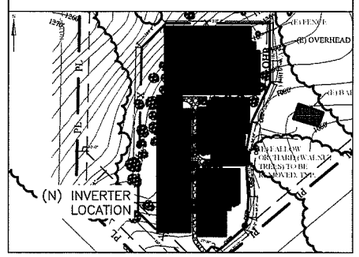

(B) 3/8" TYP

UTILITY AC DISCONNECT

(A) PROVIDES THE LOCATION OF THE SERVICE DISCONNECTING MEANS AND THE PHOTOVOLTAIC DISCONNECTING MEANS. THIS PLACE SHALL BE APPLIED TO THE MAIN SERVICE DISCONNECTING MEANS AND THE PHOTOVOLTAIC DISCONNECTING MEANS.

(B) LABEL FOR UTILITY AC DISCONNECT

(C) ARRAY SUB COMBINER BOX.OPERATING SPECIFICATIONS LABEL APPLIED TO EACH.

(D1) (D6) PHOTOVOLTAIC DC COMBINER WITH DISCONNECT SWITCH. OPERATING SPECIFICATIONS LABEL APPLIED TO EACH.

(E) PHOTOVOLTAIC AC DISCONNECT WARNING LABEL WITH SYSTEM SPECIFICATIONS.

(F) MARKING CONTENT : "CAUTION: SOLAR ELECTRIC SYSTEM CONNECTED".
RED BACKGROUND
WHITE LETTERING
MINIMUM 3/8" LETTER HEIGHT
ALL CAPITAL LETTERS
ARIAL OR SIMILAR FONT, NON BOLD
REFLECTIVE, WEATHER RESISTANT MATERIAL SUITABLE FOR THE ENVIRONMENT (DURABLE ADHESIVE MATERIALS MEET THIS REQUIREMENT)

(G) MARKING CONTENT : "CAUTION: SOLAR CIRCUIT".
RED BACKGROUND
WHITE LETTERING
MINIMUM 3/8" LETTER HEIGHT
ALL CAPITAL LETTERS
ARIAL OR SIMILAR FONT, NON BOLD
REFLECTIVE, WEATHER RESISTANT MATERIAL SUITABLE FOR THE ENVIRONMENT (DURABLE ADHESIVE MATERIALS MEET THIS REQUIREMENT)

GENERAL NOTES FOR LABELS AND MARKINGS:

1. LABELS AND MARKINGS SHALL BE APPLIED TO THE APPROPRIATE COMPONENTS IN ACCORDANCE WITH THE NEC.

2. SOLAR MODULES ARE SUPPLIED FROM THE MANUFACTURER WITH MARKINGS PRE-APPLIED TO MEET THE REQUIREMENTS OF THE NEC.

3. THE INVERTER IS SUPPLIED FROM THE MANUFACTURER WITH THE APPROPRIATE LABELS AND MARKINGS TO MEET THE REQUIREMENTS OF NEC.

4. TEXT LABELS WILL BE ETCHED WITH WHITE GRAPHICS ONTO 1/16" RED PLASTIC PLACARDS. THE LABEL WILL BE EFFECTIVELY BONDED TO THE APPROPRIATE COMPONENT ENCLOSURES IN CONSPICUOUS PLACES.

5. LABEL "A" WILL BE ETCHED WITH WHITE GRAPHICS ONTO 1/16" RED PLASTIC PLACARD. THE LABEL WILL BE EFFECTIVELY BONDED TO THE EXISTING FACILITY SWITCHBOARD AND THE NEW PHOTOVOLTAIC SYSTEM DISCONNECT.

6. MARKING FOR DC CONDUIT, RACEWAYS, ENCLOSURES, CABLE ASSEMBLIES AND JUNCTION BOXES TO ALERT THE FIRE SERVICE TO AVOID CUTTING THEM. MARKING SHOULD BE PLACED ON ALL INTERIOR & EXTERIOR DC CONDUIT, RACEWAYS, ENCLOSURES AND CABLE ASSEMBLIES, EVERY 10 FEET, AT TURNS AND ABOVE AND/OR BELOW PENETRATIONS AND ALL DC COMBINER AND JUNCTION BOXES.

(D1)

Pristine Sun **WARNING**
PHOTOVOLTAIC COMBINER BOX
"CB1.1P"

TERMINALS ON BOTH LINE AND LOAD SIDE MAY BE ENERGIZED WHEN PHOTOVOLTAIC MODULES ARE EXPOSED TO SUNLIGHT.
MAXIMUM VOLTAGE: 600VDC
MAXIMUM CURRENT: 15A/POLE
MAXIMUM OPERATING VOLTAGE: 587.6VDC
OPERATING CURRENT: <10A/POLE
DC DISCONNECT RATINGS:
OPERATING CURRENT: 139 AMPS
CURRENT RATING: 250 AMPS

4 1/2" TYP

(D2)

Pristine Sun **WARNING**
PHOTOVOLTAIC COMBINER BOX
"CB1.2P"

TERMINALS ON BOTH LINE AND LOAD SIDE MAY BE ENERGIZED WHEN PHOTOVOLTAIC MODULES ARE EXPOSED TO SUNLIGHT.
MAXIMUM VOLTAGE: 600VDC
MAXIMUM CURRENT: 15A/POLE
MAXIMUM OPERATING VOLTAGE: 587.6VDC
OPERATING CURRENT: <10A/POLE
DC DISCONNECT RATINGS:
OPERATING CURRENT: 139 AMPS
CURRENT RATING: 250 AMPS

4 1/2" TYP

(D3)

Pristine Sun **WARNING**
PHOTOVOLTAIC COMBINER BOX
"CB1.3P"

TERMINALS ON BOTH LINE AND LOAD SIDE MAY BE ENERGIZED WHEN PHOTOVOLTAIC MODULES ARE EXPOSED TO SUNLIGHT.
MAXIMUM VOLTAGE: 600VDC
MAXIMUM CURRENT: 15A/POLE
MAXIMUM OPERATING VOLTAGE: 587.6VDC
OPERATING CURRENT: <10A/POLE
DC DISCONNECT RATINGS:
OPERATING CURRENT: 139 AMPS
CURRENT RATING: 250 AMPS

4 1/2" TYP

(D4)

Pristine Sun **WARNING**
PHOTOVOLTAIC COMBINER BOX
"CB1.1N"

TERMINALS ON BOTH LINE AND LOAD SIDE MAY BE ENERGIZED WHEN PHOTOVOLTAIC MODULES ARE EXPOSED TO SUNLIGHT.
MAXIMUM VOLTAGE: 600VDC
MAXIMUM CURRENT: 15A/POLE
MAXIMUM OPERATING VOLTAGE: 587.6VDC
OPERATING CURRENT: <10A/POLE
DC DISCONNECT RATINGS:
OPERATING CURRENT: 139 AMPS
CURRENT RATING: 250 AMPS

4 1/2" TYP

(D5)

Pristine Sun **WARNING**
PHOTOVOLTAIC COMBINER BOX
"CB1.2N"

TERMINALS ON BOTH LINE AND LOAD SIDE MAY BE ENERGIZED WHEN PHOTOVOLTAIC MODULES ARE EXPOSED TO SUNLIGHT.
MAXIMUM VOLTAGE: 600VDC
MAXIMUM CURRENT: 15A/POLE
MAXIMUM OPERATING VOLTAGE: 587.6VDC
OPERATING CURRENT: <10A/POLE
DC DISCONNECT RATINGS:
OPERATING CURRENT: 139 AMPS
CURRENT RATING: 250 AMPS

4 1/2" TYP

(D6)

Pristine Sun **WARNING**
PHOTOVOLTAIC COMBINER BOX
"CB1.3N"

TERMINALS ON BOTH LINE AND LOAD SIDE MAY BE ENERGIZED WHEN PHOTOVOLTAIC MODULES ARE EXPOSED TO SUNLIGHT.
MAXIMUM VOLTAGE: 600VDC
MAXIMUM CURRENT: 15A/POLE
MAXIMUM OPERATING VOLTAGE: 587.6VDC
OPERATING CURRENT: <10A/POLE
DC DISCONNECT RATINGS:
OPERATING CURRENT: 139 AMPS
CURRENT RATING: 250 AMPS

4 1/2" TYP

(C)

Pristine Sun **WARNING**

RECOMBINER "RCB1.1P"

TERMINALS ON BOTH LINE AND LOAD SIDE MAY BE ENERGIZED WHEN PHOTOVOLTAIC MODULES ARE EXPOSED TO SUNLIGHT.

MAXIMUM VOLTAGE: 600VDC
MAXIMUM CURRENT: 225A/POLE
MAXIMUM OPERATING VOLTAGE: 589.6VDC
OPERATING CURRENT: <210A/POLE
OPERATING CURRENT: 384 AMPS
CURRENT RATING:600 AMPS

RECOMBINER "RCB1.1N"

TERMINALS ON BOTH LINE AND LOAD SIDE MAY BE ENERGIZED WHEN PHOTOVOLTAIC MODULES ARE EXPOSED TO SUNLIGHT.

MAXIMUM VOLTAGE: 600VDC
MAXIMUM CURRENT: 225A/POLE
MAXIMUM OPERATING VOLTAGE: 589.6VDC
OPERATING CURRENT: <210A/POLE
OPERATING CURRENT:384 AMPS
CURRENT RATING: 600 AMPS

8" TYP

(E)

UTILITY AC DISCONNECT 1/4". TYP
"ACDS-1"

1/2"

Pristine Sun
WARNING:
ELECTRIC SHOCK HAZARD. DO NOT TOUCH TERMINALS. TERMINALS ON BOTH THE LINE AND LOAD SIDES MAY BE ENERGIZED IN THE OPEN POSITION.

AC DISCONNECT RATINGS:
OPERATING CURRENT:902.31 AMPS
OPERATING VOLTAGE: 480 VOLTS AC
CURRENT RATING: 1200 AMPS
VOLTAGE RATING: 600 VOLTS AC

(F) 3/8" TYP

CAUTION: SOLAR ELECTRIC SYSTEM CONNECTED

(G) 3/8" TYP

CAUTION: SOLAR CIRCUIT

PROJECT TITLE:

2103-HILL
5475 JACK CREEK RD.
TEMPLETON, CA 93465
APN: 039-191-03-5

ENGINEER'S STAMP

REGISTERED PROFESSIONAL ENGINEER
JUSTIN R. HAND
No. 81188
Exp. 06/30/2015
Electrical
STATE OF CALIFORNIA

Pristine Sun
PRISTINE SUN, LLC
649 Mission Street, 5th Floor,
San Francisco, CA 94105
JOB NUMBER: 10210

REVISIONS			
#	DATE	ISSUE	
A	22-MAY-13	FOR SUBMITTAL	
B	27-JUN-13	HAJ COMMENTS	
C	02-AUG-13	FOR RESUBMITTAL	
D	21-OCT-13	PHASE 2- UPDATE	

DRAWN BY:	NATRON
CHECKED BY:	JHA
APPROVED BY:	JHA
DOCUMENT DATE:	10/17/2013

SCALE: NTS

SHEET TITLE: LABELS & MARKINGS -1

SHEET #: E.8.1

D7

WARNING

ARRAY SUB COMBINER BOX
"CB 2.1P"

TERMINALS ON BOTH LINE AND LOAD SIDE
MAY BE ENERGIZED WHEN PHOTOVOLTAIC
MODULES ARE EXPOSED TO SUNLIGHT.
MAXIMUM VOLTAGE: 600VDC
MAXIMUM CURRENT: 15A/POLE
MAXIMUM OPERATING VOLTAGE: 587.6VDC
OPERATING CURRENT: <10A/POLE
DC DISCONNECT RATINGS:
OPERATING CURRENT: 148 AMPS
CURRENT RATING: 250 AMPS

4½" TYP

D8

WARNING

PHOTOVOLTAIC COMBINER BOX
"CB2.2P"

TERMINALS ON BOTH LINE AND LOAD SIDE
MAY BE ENERGIZED WHEN PHOTOVOLTAIC
MODULES ARE EXPOSED TO SUNLIGHT.
MAXIMUM VOLTAGE: 600VDC
MAXIMUM CURRENT: 15A/POLE
MAXIMUM OPERATING VOLTAGE: 587.6VDC
OPERATING CURRENT: <10A/POLE
DC DISCONNECT RATINGS:
OPERATING CURRENT: 148 AMPS
CURRENT RATING: 250 AMPS

4½" TYP

D9

WARNING

PHOTOVOLTAIC COMBINER BOX
"CB2.3P"

TERMINALS ON BOTH LINE AND LOAD SIDE
MAY BE ENERGIZED WHEN PHOTOVOLTAIC
MODULES ARE EXPOSED TO SUNLIGHT.
MAXIMUM VOLTAGE: 600VDC
MAXIMUM CURRENT: 15A/POLE
MAXIMUM OPERATING VOLTAGE: 587.6VDC
OPERATING CURRENT: <10A/POLE
DC DISCONNECT RATINGS:
OPERATING CURRENT: 148 AMPS
CURRENT RATING: 250 AMPS

4½" TYP

D10

WARNING

PHOTOVOLTAIC COMBINER BOX
"CB2.4P"

TERMINALS ON BOTH LINE AND LOAD SIDE
MAY BE ENERGIZED WHEN PHOTOVOLTAIC
MODULES ARE EXPOSED TO SUNLIGHT.
MAXIMUM VOLTAGE: 600VDC
MAXIMUM CURRENT: 15A/POLE
MAXIMUM OPERATING VOLTAGE: 587.6VDC
OPERATING CURRENT: <10A/POLE
DC DISCONNECT RATINGS:
OPERATING CURRENT: 148 AMPS
CURRENT RATING: 250 AMPS

4½" TYP

D11

WARNING

PHOTOVOLTAIC COMBINER BOX
"CB2.5P"

TERMINALS ON BOTH LINE AND LOAD SIDE
MAY BE ENERGIZED WHEN PHOTOVOLTAIC
MODULES ARE EXPOSED TO SUNLIGHT.
MAXIMUM VOLTAGE: 600VDC
MAXIMUM CURRENT: 15A/POLE
MAXIMUM OPERATING VOLTAGE: 587.6VDC
OPERATING CURRENT: <10A/POLE
DC DISCONNECT RATINGS:
OPERATING CURRENT: 130 AMPS
CURRENT RATING: 250 AMPS

4½" TYP

D12

WARNING

PHOTOVOLTAIC COMBINER BOX
"CB2.6P"

TERMINALS ON BOTH LINE AND LOAD SIDE
MAY BE ENERGIZED WHEN PHOTOVOLTAIC
MODULES ARE EXPOSED TO SUNLIGHT.
MAXIMUM VOLTAGE: 600VDC
MAXIMUM CURRENT: 15A/POLE
MAXIMUM OPERATING VOLTAGE: 587.6VDC
OPERATING CURRENT: <10A/POLE
DC DISCONNECT RATINGS:
OPERATING CURRENT: 78 AMPS
CURRENT RATING: 200 AMPS

4½" TYP

D13

WARNING

PHOTOVOLTAIC COMBINER BOX
"CB2.1N"

TERMINALS ON BOTH LINE AND LOAD SIDE
MAY BE ENERGIZED WHEN PHOTOVOLTAIC
MODULES ARE EXPOSED TO SUNLIGHT.
MAXIMUM VOLTAGE: 600VDC
MAXIMUM CURRENT: 15A/POLE
MAXIMUM OPERATING VOLTAGE: 589.6VDC
OPERATING CURRENT: <10A/POLE
DC DISCONNECT RATINGS:
OPERATING CURRENT: 145 AMPS
CURRENT RATING: 250 AMPS

4½" TYP

D14

WARNING

PHOTOVOLTAIC COMBINER BOX
"CB2.2N"

TERMINALS ON BOTH LINE AND LOAD SIDE
MAY BE ENERGIZED WHEN PHOTOVOLTAIC
MODULES ARE EXPOSED TO SUNLIGHT.
MAXIMUM VOLTAGE: 600VDC
MAXIMUM CURRENT: 15A/POLE
MAXIMUM OPERATING VOLTAGE: 589.6VDC
OPERATING CURRENT: <10A/POLE
DC DISCONNECT RATINGS:
OPERATING CURRENT: 145 AMPS
CURRENT RATING: 250 AMPS

4½" TYP

D15

WARNING

PHOTOVOLTAIC COMBINER BOX
"CB2.3N"

TERMINALS ON BOTH LINE AND LOAD SIDE
MAY BE ENERGIZED WHEN PHOTOVOLTAIC
MODULES ARE EXPOSED TO SUNLIGHT.
MAXIMUM VOLTAGE: 600VDC
MAXIMUM CURRENT: 15A/POLE
MAXIMUM OPERATING VOLTAGE: 589.6VDC
OPERATING CURRENT: <10A/POLE
DC DISCONNECT RATINGS:
OPERATING CURRENT: 145 AMPS
CURRENT RATING: 250 AMPS

4½" TYP

D16

WARNING

PHOTOVOLTAIC COMBINER BOX
"CB2.4N"

TERMINALS ON BOTH LINE AND LOAD SIDE
MAY BE ENERGIZED WHEN PHOTOVOLTAIC
MODULES ARE EXPOSED TO SUNLIGHT.
MAXIMUM VOLTAGE: 600VDC
MAXIMUM CURRENT: 15A/POLE
MAXIMUM OPERATING VOLTAGE: 589.6VDC
OPERATING CURRENT: <10A/POLE
DC DISCONNECT RATINGS:
OPERATING CURRENT: 145 AMPS
CURRENT RATING: 250 AMPS

4½" TYP

D17

WARNING

PHOTOVOLTAIC COMBINER BOX
"CB2.5N"

TERMINALS ON BOTH LINE AND LOAD SIDE
MAY BE ENERGIZED WHEN PHOTOVOLTAIC
MODULES ARE EXPOSED TO SUNLIGHT.
MAXIMUM VOLTAGE: 600VDC
MAXIMUM CURRENT: 15A/POLE
MAXIMUM OPERATING VOLTAGE: 589.6VDC
OPERATING CURRENT: <10A/POLE
DC DISCONNECT RATINGS:
OPERATING CURRENT: 128 AMPS
CURRENT RATING: 250 AMPS

4½" TYP

D18

WARNING

PHOTOVOLTAIC COMBINER BOX
"CB2.6N"

TERMINALS ON BOTH LINE AND LOAD SIDE
MAY BE ENERGIZED WHEN PHOTOVOLTAIC
MODULES ARE EXPOSED TO SUNLIGHT.
MAXIMUM VOLTAGE: 600VDC
MAXIMUM CURRENT: 15A/POLE
MAXIMUM OPERATING VOLTAGE: 589.6VDC
OPERATING CURRENT: <10A/POLE
DC DISCONNECT RATINGS:
OPERATING CURRENT: 77 AMPS
CURRENT RATING: 200 AMPS

4½" TYP

PROJECT TITLE:

2103-HILL
5475 JACK CREEK RD.
TEMPLETON, CA 93465
APN: 039-191-03-5

ENGINEER'S STAMP

REGISTERED PROFESSIONAL ENGINEER
JEFFREY H. ARNOLD
Lic. No. 19488
Exp. 06/30/2015
Electrical
STATE OF CALIFORNIA

Pristine Sun
PRISTINE SUN, LLC
649 Mission Street, 5th Floor,
San Francisco, CA 94105

JOB NUMBER: 10210

REVISIONS

#	DATE	ISSUE
A	22-MAY-13	FOR SUBMITTAL
B	27-JUN-13	AHJ COMMENTS
C	02-AUG-13	FOR RESUBMITTAL
D	21-OCT-13	PHASE 2- UPDATE

DRAWN BY:	NATRON
CHECKED BY:	JHA
APPROVED BY:	JHA
DOCUMENT DATE:	10/17/2013

SCALE:
NTS

SHEET TITLE:
LABELS & MARKINGS -2

SHEET #:
E.8.2

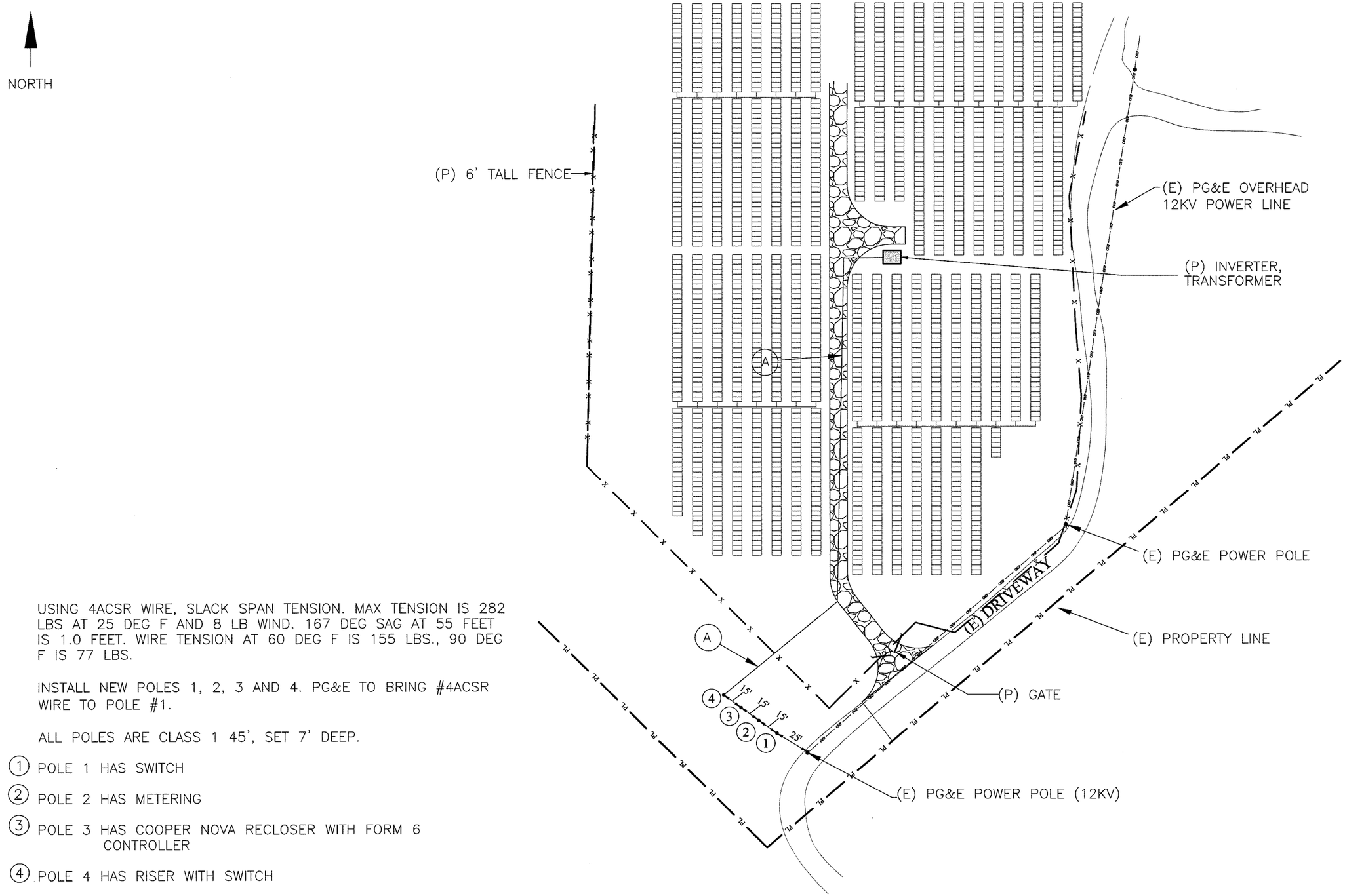

USING 4ACSR WIRE, SLACK SPAN TENSION. MAX TENSION IS 282 LBS AT 25 DEG F AND 8 LB WIND. 167 DEG SAG AT 55 FEET IS 1.0 FEET. WIRE TENSION AT 60 DEG F IS 155 LBS., 90 DEG F IS 77 LBS.

INSTALL NEW POLES 1, 2, 3 AND 4. PG&E TO BRING #4ACSR WIRE TO POLE #1.

ALL POLES ARE CLASS 1 45', SET 7' DEEP.

1. POLE 1 HAS SWITCH
2. POLE 2 HAS METERING
3. POLE 3 HAS COOPER NOVA RECLOSER WITH FORM 6 CONTROLLER
4. POLE 4 HAS RISER WITH SWITCH

UNDERGROUND LINE IS A 1/0 AL 220 MIL, 15KV RATED EPR OR XLP CABLE IN 4" PVC CONDUIT. NOTE THAT CABLE IS RATED 15KV, BUT THE LINE VOLTAGE IS 12KV.

PROJECT TITLE:

2103-HILL
5475 JACK CREEK RD.
TEMPLETON, CA 93465
APN: 039-191-03-5

ENGINEER'S STAMP

REGISTERED PROFESSIONAL ENGINEER
Charles W. Cunha
No. 12478
Exp.6-30-13
ELECTRICAL
STATE OF CALIFORNIA

Pristine Sun
PRISTINE SUN, LLC
649 Mission Street, 5th Floor,
San Francisco, CA 94105
JOB NUMBER: 10210

REVISIONS

#	DATE	ISSUE
A	22-MAY-13	FOR SUBMITTAL
B	27-JUN-13	AHJ COMMENTS
C	02-AUG-13	FOR RESUBMITTAL
D	21-OCT-13	PHASE 2- UPDATE

DRAWN BY:	NATRON
CHECKED BY:	JHA
APPROVED BY:	JHA
DOCUMENT DATE:	10/17/2013

SCALE: NTS

SHEET TITLE: POLE LINE PLAN VIEW

SHEET #: E.9.1

USING 4ACSR WIRE, SLACK SPAN TENSION. MAX TENSION IS 282 LBS AT 25 DEG F AND 8 LB WIND. 167 DEG SAG AT 55 FEET IS 1.0 FEET.
WIRE TENSION AT 60 DEG F IS 155 LBS., 90 DEG F IS 77 LBS.

INSTALL NEW POLES 1, 2, 3 AND 4. PG&E TO BRING #4ACSR WIRE TO POLE #1.

LINE VOLTAGE IS 12KV
POLE 1 – CLASS 1, SET 7" DEEP, SWITCH POLE (PER PG&E STANDARDS)
POLE 2 – CLASS 1, SET 7' DEEP, METERING POLE (PG&E INSTALLS METERING, EXCEPT FOR METERING CAN/SOCKET)
POLE 3 – CLASS 1, SET 7' DEEP, RECLOSER POLE
POLE 4 – CLASS 1, SET 7' DEEP, RISER POLE WITH SWITCH (SWITCH PER PG&E STANDARDS)

UNDERGROUND LINE IS 12KV, 1/0 AL 220 MIL, WITH 80 MIL JACKET, 15KV RATED EPR OR XLPE–CONC–PE CABLE IN 4" PVC CONDUIT.

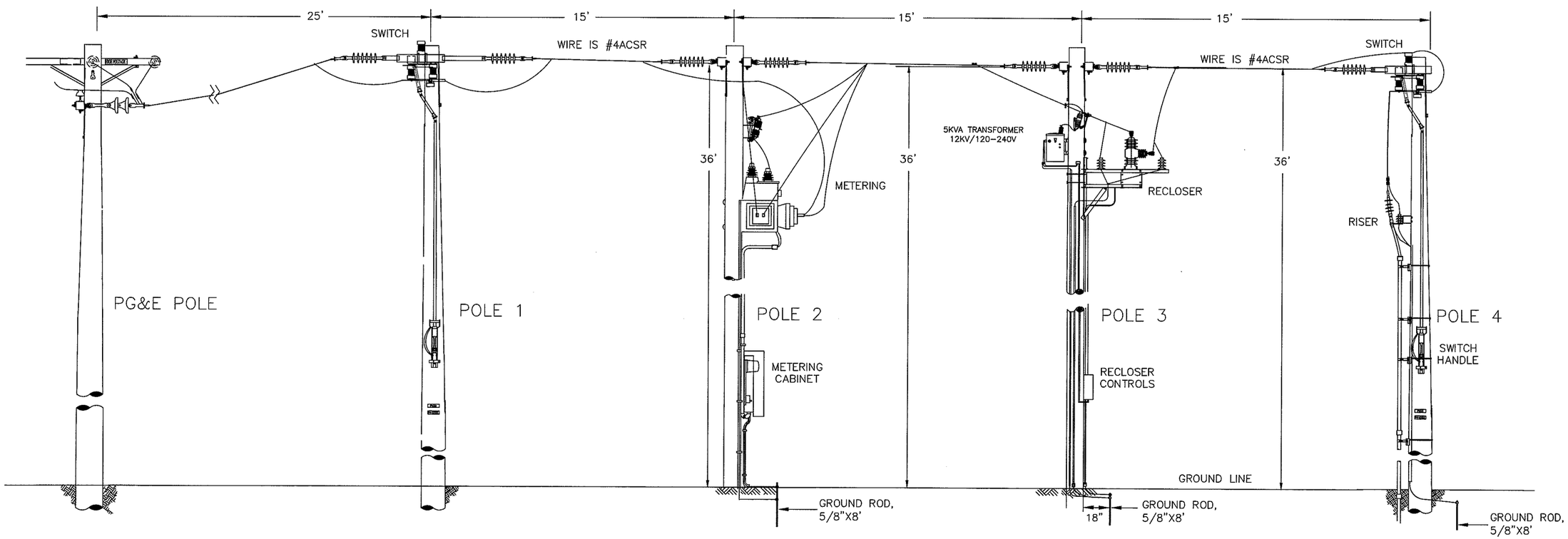

PROJECT TITLE:

2103-HILL
5475 JACK CREEK RD.
TEMPLETON, CA 93465
APN: 039-191-03-5

ENGINEER'S STAMP

REGISTERED PROFESSIONAL ENGINEER
Charles W. Cunha
No. 12478
Exp.9–30–13
CIVIL
STATE OF CALIFORNIA

Pristine Sun
PRISTINE SUN, LLC
649 Mission Street, 5th Floor,
San Francisco, CA 94105
JOB NUMBER: 10210

REVISIONS

#	DATE	ISSUE
A	22–MAY–13	FOR SUBMITTAL
B	27–JUN–13	AHJ COMMENTS
C	02–AUG–13	FOR RESUBMITTAL
D	21–OCT–13	PHASE 2– UPDATE

DRAWN BY:	NATRON
CHECKED BY:	JHA
APPROVED BY:	JHA
DOCUMENT DATE: 10/17/2013	

SCALE: NTS

SHEET TITLE: POLE LINE PROFILE VIEW

SHEET #: E.9.2

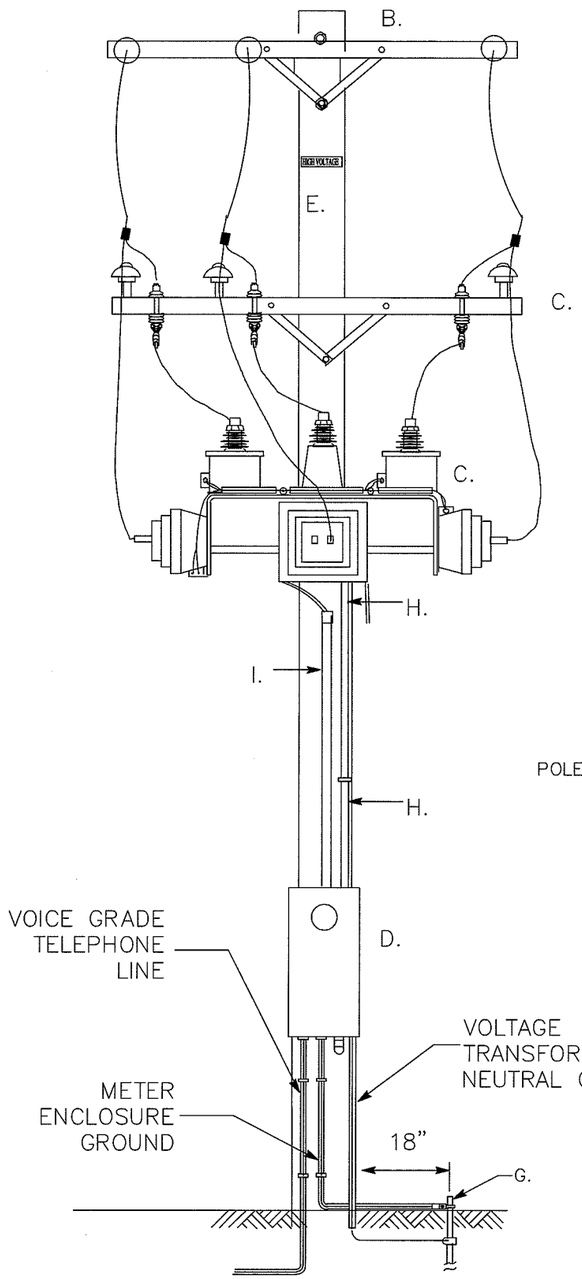

SOLAR

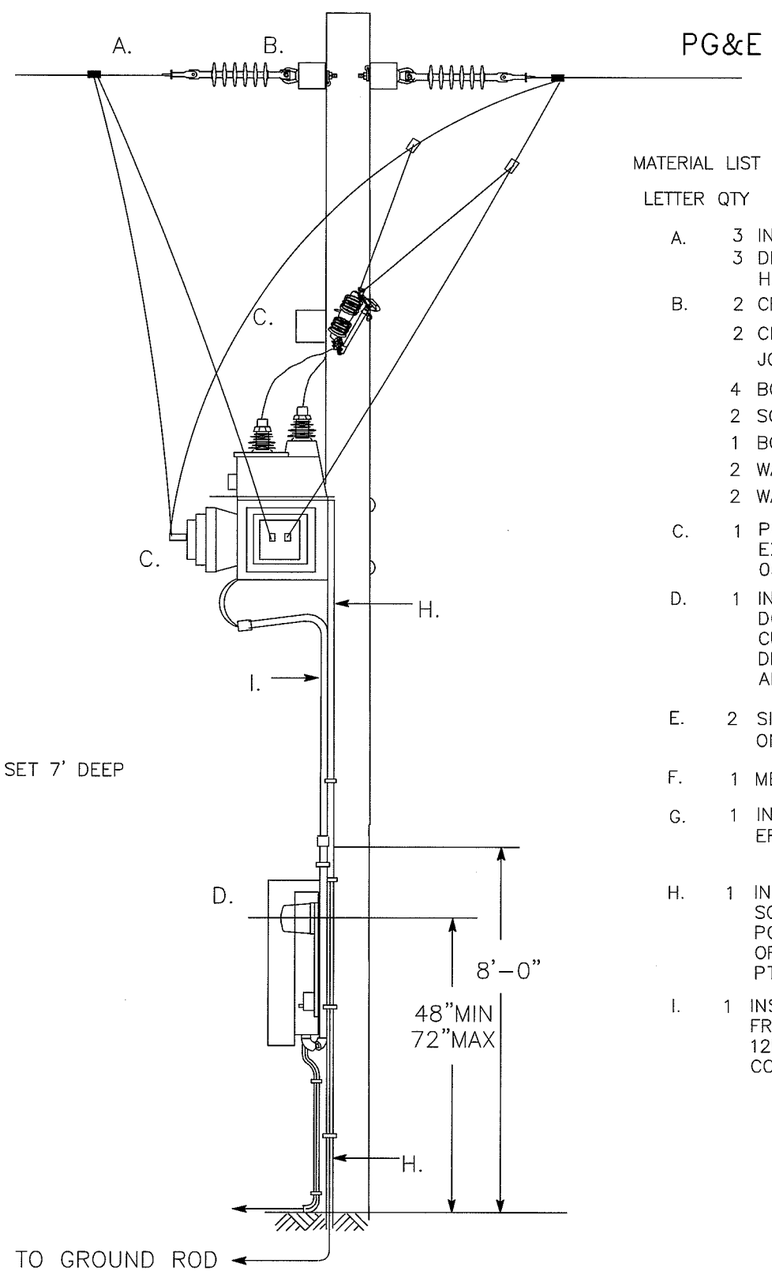

PG&E

POLE 2

POLE IS CLASS 1, 45', SET 7' DEEP

INSTALL GROUNDING PER PG&E 058779

MATERIAL LIST FOR SAN BENITO SMART PARK, LLC.

LETTER	QTY	ITEM
A.	3	INSULATOR, SUSPENSION TYPE, 12KV
	3	DEAD-END CLAMP FOR 4ACSR HUBBLE CLEVIS BAIL, CD442A OR EQUIVALENT
B.	2	CROSSARMS, 8' X 3-3/4" X 4-3/4"
	2	CROSSARM BRACE, ANGLE, 6 FT., SNOW, JOSLYN CAT. NO. J1512
	4	BOLT, CARRIAGE, 3/8" x 5 1/2"
	2	SCREW, LAG, 1/2" x 4 1/2"
	1	BOLT, CROSSARM, 5/8" x 22"
	2	WASHER, SPRING, 5/8"
	2	WASHER, SQUARE, 2 1/4", 5/8" HOLE
C.	1	PG&E TO INSTALL METERING EQUIPMENT, EXCEPT FOR METERING ENCLOSURE, PER PG&E 058779
D.	1	INSTALL METERING ENCLOSURE PER PG&E DOCUMENT 058779. SEE DRAWING C1.4A. CUSTOMER TO PROVIDE PG&E WITH SHOP DRAWINGS OR CUT SHEET AND RECEIVE APPROVAL PRIOR TO PURCHASE.
E.	2	SIGN, HIGH VOLTAGE, YELLOW PLASTIC ONE EACH SIDE OF POLE
F.	1	METERING PER PG&E 058779
G.	1	INSTALL GROUND ROD, 5/8"X8', COPPER CLAD ERITECH CAT#615880, OR GALVAN CAT#6258
H.	1	INSTALL 27'-6" OF 1/2" PVC WITH #4AWG SOLID BARE COPPER AND ATTACH TO GROUND. PG&E 058779 ITEM 42 (PAGE 4). LEAVE 5' OF WIRE AT TOP FOR PG&E ATTACHMENT TO PTS.
I.	1	INSTALL 21'-6" OF 1-1/2" SCHED 40 PVC FROM METERING CABINET TO JUST BELOW 12KV METERING LOCATION AND TERMINATE CONDUIT INTO A DOWNWARD FACING ELBOW.

PROJECT TITLE:

2103-HILL
5475 JACK CREEK RD.
TEMPLETON, CA 93465
APN: 039-191-03-5

ENGINEER'S STAMP

REGISTERED PROFESSIONAL ENGINEER
Charles W. Cunha
No. 12470
Exp.9-30-13
ELECTRICAL
STATE OF CALIFORNIA

Pristine Sun
PRISTINE SUN, LLC
649 Mission Street, 5th Floor,
San Francisco, CA 94105
JOB NUMBER: 10210

REVISIONS

#	DATE	ISSUE
A	22-MAY-13	FOR SUBMITTAL
B	27-JUN-13	AHJ COMMENTS
C	02-AUG-13	FOR RESUBMITTAL
D	21-OCT-13	PHASE 2- UPDATE

DRAWN BY:	NATRON
CHECKED BY:	JHA
APPROVED BY:	JHA
DOCUMENT DATE:	10/17/2013

SCALE: NTS

SHEET TITLE: POLE 2 METERING DETAILS- SHEET 1

SHEET #: E.9.3

Prepared by: EOB1/JZB1

PG&E **POLE-TOP PRIMARY METERING INSTALLATION, CLUSTER MOUNTED (12 OR 21 KV LINE)** **058779**

Asset Type: Electric Metering **Function:** Design

Approved by: Quoc Hoang (QxH1) **Date:** 04-15-10

Rev. #01: This document replaces PG&E Document 058779, Rev. #00. For a description of the changes, see Page 7.

This document is also included in the following manual:

- *PG&E Distribution Interconnection Handbook*

Purpose and Scope

This document specifies pole-top metering installations using outdoor-type instrument transformers mounted on a prefabricated aluminum bracket. Pole-top primary metering is permitted only where indoor metering is not practical. PG&E will construct all pole-top primary metering installations and will furnish and install the outdoor-type instrument transformers and aluminum mounting brackets, all necessary meters, test switches, and wiring between the instrument transformers and meters, provided the customer pays the excess costs over an indoor metering installation of equivalent capacity.

General Information

1. Metering transformers will be located on a PG&E-approved pole or structure. This pole or structure shall be provided and maintained by the customer.
2. The customer shall furnish a suitable location, either indoors or outdoors for the PG&E meters. When meters are to be installed in outdoor locations, the customer shall furnish and install an outdoor meter enclosure in accordance with Document 033584A.
3. If the load to be metered requires a kilowatt demand recorder, the meter enclosure shall be of the walk-in type illustrated in Document 033584A. (Provision should be made for a walk-in enclosure when there is a probability that a kilowatt demand recorder may be required in the future.)
4. The meter enclosure shall be installed in a suitable, approved location. It may be installed on the metering pole located on the customer's property. It should be located so that the secondary wires from the instrument transformers to the meter will be as short as practical. Under no circumstances should the secondary wires be longer than 50 feet in order to avoid impairment of meter accuracy.
5. The customer shall furnish and install a meter enclosure ground in accordance with the state building standards electrical code and with city and county ordinances.
6. The minimum size ground wire for the meter enclosure shall be #6 AWG copper and shall be fastened securely to an approved grounding electrode. Where installed on a pole, the meter enclosure ground wire shall be protected against mechanical injury by rigid steel conduit or armor cladding connected to the ground electrode by means of an approved conduit-grounding hub and clamp or an approved armor-grounding hub and clamp.
7. The connection of the meter enclosure ground wire to the grounding electrode must be above ground or otherwise readily accessible for inspection.
8. The customer shall furnish and install a 1-1/4 inch rigid steel galvanized conduit for meter wiring from the meter enclosure to the 8-foot level on the metering pole. The customer shall furnish and PG&E will install the necessary materials to cover the meter wiring above the 8-foot level on the metering pole.
9. Fusing of the potential transformers for outdoor primary metering shall be in accordance with the following:
   A. Service from distribution feeder – Fuse potential transformers when tap is not fused (fuse tap if load is not too large for standard fuses).
   B. Service from substation buses – Fuse potential transformers.
   C. Service from PG&E transformers which supply an individual customer - Fuse potential transformers when load is supplied by transformer bank larger than 1,500 kVA (when transformer bank is 1,500 kVA or less, fuse the primary of supply transformers only).
10. Placement of the PTs and CTs on the cluster bracket can be interchanged to suit the job application.

References	Location	Document
3-Wire Crossarm Construction 12, 17, and 21 kV Circuits	OH: Framing	015116
Installation of Grounds on Wood Pole Transmission and Distribution Lines	OH: Transformers	021904
Clearance Tables CPUC General Order 95	OH: Clearances	022158
Marking, Numbering, and Identification of Line Structures	OH: Marking	022168
Installation of Cable Risers on Wood Poles	OH: Risers/UG-1 Terminations	027742
Diagram of Connections for Metering Polyphase Loads Using Transformer-Rated Meters	OH: Meters/UG-1: Services	028163
Pole-Top Primary Metering Installations, 2.4 to 17 kV Lines	FRO: Meters	033584A
Slack Span Construction for Distribution Lines	OH: Framing	061112
25 kV Underarm Side-Break Switch, Manual and Automated	OH: Switches	066195
Engineering Material Specification #57 "Preservative Treated Wood Poles, Stubs, and Anchor Logs for Overhead Lines"	TIL	EMS57

Material

Table 1 List of Materials to Be Furnished and Installed by PG&E

Item	Description	Code	Document Number
1	Transformer, Current, Outdoor-Type (rating as required)	–	054340
2	Transformer, Potential, Outdoor-Type (rating as required)	–	
3	Insulator, Pin (as required)	–	022088
4	Pin, Insulator Steel	–	022473
5	Fuse, Cutout (as required)	–	015225
6	Insulator, Composite, Dead-End Type (as required)	–	022088
7	Washer, Spring Clip, Galvanized, for 5/8" Bolt	033320	058778
8	Wire, Overhead (size as required)	–	059626
9	Wire, Coded, Meter, #10, 600 V	–	EMS26
10	Lead Wire, Connectors (as required)	–	–
11	High-Voltage Signs	373038	022168
12	Crossarm Assembly, 8' 0" or 9' 0", Single or Double-Arm (as required)	–	015116
13	Meter (watthour, watthour demand, etc.) (as required)	–	–
14	Test Switch, Reactiformer (as required)	–	026237
15	Dead-End Attachment, for Al, See Document 028851, for Cu, See Document 015218	–	–
16	Guy Material (as required)	–	022178
17	Insulator Clearance Bracket, 1" Pin Thread [1]	181215	015190
18	Insulator Clearance Bracket, 1-3/8" Pin Thread [1]	181216	015190
19	Bracket, for Instrument Transformers (Aluma-Form Catalog Number GPMM-6 or Barfield Manufacturing Catalog Number BAPMMG)	181268	–
20	Air Switch, Install Per Document 033131 (switch-type, as required)	–	022635
21	Bolt, Machine, 5/8" x Length (as required)	–	058778

[1] Items 17 and 18 may be used if additional jumper clearance is required.

Material (continued)

Table 2 List of Materials to Be Furnished by Customer

Item	Description	Code	Document Number
22	Pole, Wood, Fully Treated and PG&E Inspected (as required)	–	EMS57
23	Washer, Curved, 3", for 3/4" Bolt	195293	058778
24	Meter Enclosure, Weatherproof (see Document 033584A)	–	–
25	Coupling, PVC, 1-1/4", Slip Fit, Sloane Catalog Number CG405 or Equivalent	360410	–
26	Elbow, Type LR, PVC, 1-1/4", Female, Slip Fit, Sloane Catalog Number LR40S or Equivalent	360508	–
27	Bend, PVC, 1-1/4", 90°, R=5-3/4", Slip Fit, Schedule 80, Gray	360509	–
28	Strap, Pipe, Galvanized, Two-Hole (as required)	–	057577
29	Conduit, Rigid Steel, 1-1/4", Galvanized	390121	–
30	Conduit Fitting, Threaded (for armor wire or steel conduit, Item 33)	–	–
31	Conduit Fitting, Threaded, (for Item 29)	–	–
32	Wire, Ground, #6 Minimum Copper, Bare [1]	–	–
33	Conduit, Rigid Steel, 1/2", Galvanized (for meter enclosure ground wire) [1]	390118	–
34	Conduit, Rigid PVC, 1/2", Schedule 40 With/Coupling 10' Lengths	360366	021924
35	Conduit Grounding Hub and Clamp, (for conduit, Thomas & Betts catalog number 3932 or equivalent; for armor, Thomas & Betts catalog number 3963, or equivalent)	–	–
36	Rod, Ground, 5/8" x 8' 0" Copper Covered Steel Rod	187013	013109
37	Clamp, Ground Rod	187012	
38	Wire, Ground, PT Neutral, #6 Minimum Bare Copper	290033	–
39	Conduit, Rigid PVC, 1-1/4" Schedule 80, Gray	360408	–
40	Adapter, Female, PVC, 1-1/4", Thread to Slip Fit, Sloane Catalog Number FA1303 (or equivalent)	360511	–
41	Bolt Cover, Insulating	149042	058778
42	Grounding Assembly GR-5 With PVC Conduit	160080	021904
43	Riser Assembly (as required)	–	027742

[1] Armor clad ground wire may be used for meter enclosure ground. Omit rigid steel conduit (Item 33) when armor cladding is used.

Service to Customer's Riser–12 kV Shown (see Note 3)

Notes

1. High-voltage sign, Item 11 (see Table 1 on Page 2). When high-voltage supply equipment is installed on the pole, the high-voltage sign may be located on the climbing side of the pole no more than 6 inches below the bottom of the equipment. Refer to Document 022168.
2. Orient the current and voltage transformers on the bracket so that the polarized primary terminal leads are connected to the incoming line without interference as shown.
3. Connect the voltage transformer ground point to the 21 kV common neutral if one is provided on the pole. Refer to Document 027742 for common neutral grounding and other grounding and clearance requirements for riser construction.
4. The minimum radial clearance between the primary wire and instrument transformer secondary wires is 17-1/2 inches for 12 kV and 24 inches for 21 kV line.
5. The primary conductor open point may be constructed using flying bells (Figure 1 on Page 4), slack span dead-end construction (Figure 2 on Page 6), tension dead-end construction (Document 015116), or air switch (Document 066195).

Service to Customer's Riser–12 kV Shown (see Note 3 on Page 5)(continued)

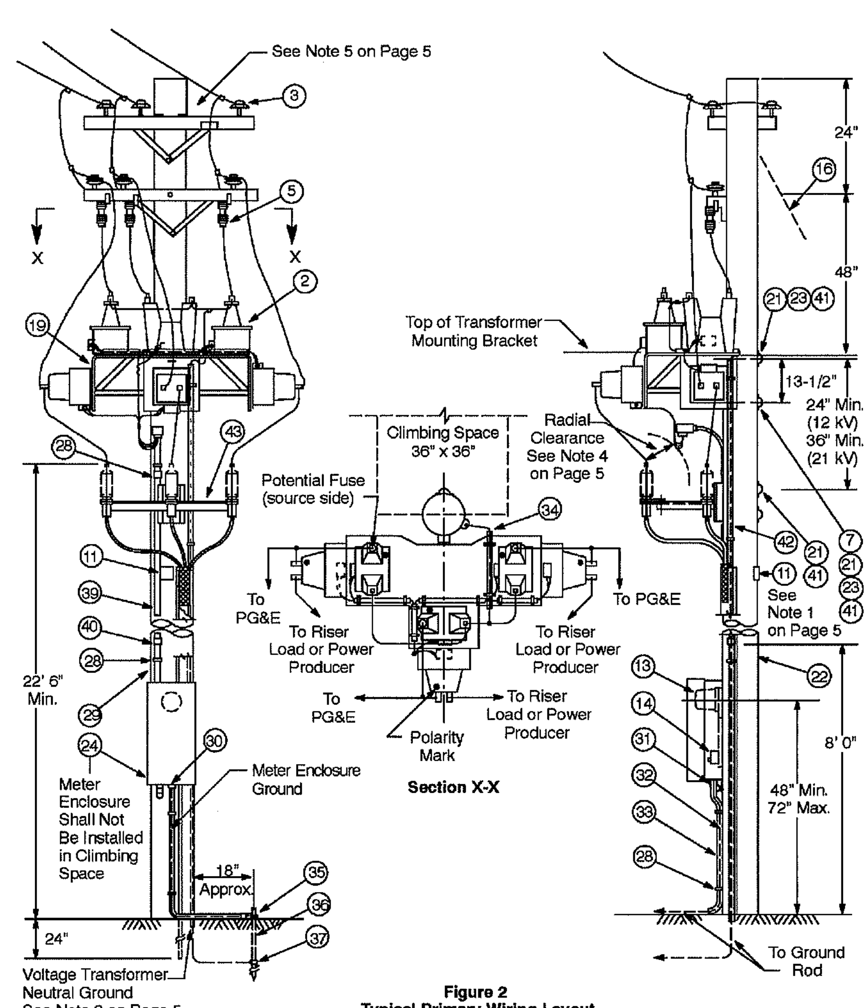

Figure 2
Typical Primary Wiring Layout and Meter Wiring

#	DATE	ISSUE
A	22–MAY–13	FOR SUBMITTAL
B	27–JUN–13	AHJ COMMENTS
C	02–AUG–13	FOR RESUBMITTAL
D	21–OCT–13	PHASE 2– UPDATE

SHEET #: E.9.4

SHEET TITLE: POLE 2 METERING DETAILS– SHEET 2

SCALE: NTS

DRAWN BY: NATRON
CHECKED BY: JHA
APPROVED BY: JHA
DOCUMENT DATE: 10/17/2013

Pristine Sun
PRISTINE SUN, LLC
649 Mission Street, 5th Floor,
San Francisco, CA 94105
JOB NUMBER: 10210

ENGINEER'S STAMP: REGISTERED PROFESSIONAL ENGINEER, Charles W. Cunha, No. 12478, Exp. 9-30-13, ELECTRICAL, STATE OF CALIFORNIA

PROJECT TITLE:
2103-HILL
5475 JACK CREEK RD.
TEMPLETON, CA 93465
APN: 039-191-03-5

Prepared by: JTMZ

PG&E	25 KV UNDERARM SIDE-BREAK SWITCH, MANUAL AND AUTOMATED	066195

Asset Type:	Electric Distribution	**Function:**	Construction, Maintenance, and Operation
Issued by:	Sam Chang (SKC5)	**Date:**	10-15-10

Rev. #18: This document replaces Document 066195, Rev. #17. For a description of the changes, see Page 29.

Purpose and Scope

This document specifies the requirements and preferred installation of manual and automated 25 kV underarm side-break switches (U.S. Switch).

General Information, Both Manual and Automated Switches

1. The U.S. Switch is required to be designed, manufactured, and tested to meet all applicable ANSI (American National Standards Institute) standards, IEEE (Institute of Electrical and Electronic Engineers) standards, and all requirements shown and described in this document. In addition, the U.S. Switch is required to be tested to meet the CDF (California Department of Forestry) requirements and qualified as exempt electrical equipment.
2. Switch Code 341575 (manual) or switch Code 341497 (automated) are for use in all switch applications and districts, except for 21 kV in AA insulation districts. For 21 kV in AA insulation districts, use switch Code 341576 (manual) or switch Code 341488 (automated). The Cooper/Kearney and the S&C U.S. Switch both use epoxy insulators, and Inertia uses station post silicone rubber insulators.
3. The switch codes shown in this document are for the U.S. Switch. These switches are shipped as tangent 3-wire, and are adaptable to all line configurations; e.g., tangent 4-wire, angle, tangent riser, dead-end riser, alley arm, etc.
4. **Caution:** The U.S. Switch is designed and manufactured to be installed in the underarm position only. **Do not** install this switch in the upright position. The bell crank operation will be reversed causing the switch to operate opposite of the normal open/close positions.
5. DE type composite insulators and extension links are not included by the manufacturer of the switch and must be ordered separately. Extension links are required for all installations where dead-ending occurs on the switch arm dead-end bracket. **Important:**
   A. Three extension links are required per phase for the automated switches; i.e., two extension links on the sensor insulator side and one extension link on the opposite side.
   B. Inertia switches no longer come with hardware long enough to support line current/voltage sensor insulators. Line sensor bracket will need to be ordered separately. This item is yet to be coded.
6. The U.S. Switch is furnished with terminal paddles for use with fired wedge connectors. Select the appropriate fired wedge connector from Document 066194 by using 397.5 AAC (terminal paddle size) for one groove size, and the line conductor size for the other groove size. The terminal paddle has a normal ampacity rating of 900 amperes. Do **not** unbolt and reuse paddle assemblies. New assemblies **must** be used (see Table 9 on Page 9, Code 340361).
7. In order to maintain the 36-inch climbing space for below pole-top installations, the U.S. Switch is manufactured with approximately 24 inches of phase spacing. Limit span lengths to approximately 400 feet with the 24-inch phase spacing. When the switch is mounted at pole top, additional phase spacing can be achieved by moving the center dead-end bracket next to the pole mounting bracket. Moving this center dead-end bracket will allow for span lengths greater than 400 feet and will provide increased raptor protection.
8. Switches are permitted in the working space, but switches, or any part of the switch, must not be installed in the climbing space.
9. Install the switch handle (bottom when opened) or MSO controller (bottom of cabinet) at a minimum of 15 feet above the ground line.

10. Attach the operating numbers to the pole in a vertical configuration below the switch handle or MSO controller. If the numbers cannot be readily seen from the road, install an additional set of numbers at the 9-foot level on the traffic side of the pole.

Installation Instructions

Manual Switch and Switch Portion of Automated Switch

11. The U.S. Switch is unitized and fully adjusted at the factory. The following are the manufacturer's installation instructions:
   A. The U.S. Switch manufacturers apply switch contact lubrication at the factory. During installation, **do not** apply additional contact lubrication. After a few years, a switch may become stiff and difficult to operate. If that occurs, sparingly apply Mobile 28 (Code 500027) to the overhead switch contacts. Note that the switch contact lubricant "Conducto Lube" should no longer be used.
   B. All Cooper U.S. Switches are furnished with three galvanized steel channels for mounting larger diameter post-type insulators to the steel crossarm. **Note:** Tighten the bottom nut and lock washer to the bottom of the steel crossarm. The phase unit has a large hole for inserting a socket.
   C. Mount unitized switch to pole with 3/4-inch bolts at the desired location, using TECO shear plates as shown in "Mounting Detail" on Page 10.
   D. Attach eye bolt guides to pole as required and thread 1-inch fiberglass through guides and attach to clamp on bell crank.
   E. Use only the switch handle that comes with that switch. The manufacturers use different throws, so mixing handles will not work.
   F. Attach control rod to control handle with the control handle and adjusting clevis in position and mount handle to pole with 5/8-inch bolts. Adjust the control rod to have a slight compression load against the switch bell crank when the switch is in the fully closed position; i.e., there must be a slight bow in the fiberglass control rod when the switch is in the fully closed position. Use approximately 1-1/4 inches of compression for 30 feet of rod.
   G. Remove factory-installed contact blade shipping ties.
   H. Check interrupters individually for proper operation. Operate each interrupter by hand. A "slamming action" should occur when testing each one by moving the rod/rocker through its complete arc. A defective load interrupter will have a consistent spring tension without the "slamming action." Simply testing the switch after it has been installed will not detect this problem.
      After testing the interrupters, make sure that each interrupter is **cocked** (in the correct position for the next switch operation). If an interrupter is not properly **cocked** and **latched**, a load-break switch operation will most likely result in a flashover and a switch failure.
   I. Operate the switch several times and check for any difficulties. A compression load should be felt on the control at the end of the closing stroke. Adjustment of load can be made by adjusting clevis as needed.
   J. For Cooper Switch
      (1) Check to be sure that all phases are fully closed. Ensure that the reliabreak trip arm is passed through the catch arm in the latched position; if not, adjustment should be made at adjusting clevis. If for some reason only one or two phases are not fully closed, adjustment should be made at the interphase clamp of that unit.
   K. For S&C Switch
      (1) Check to be sure that all phases are fully closed by visually inspecting that the blades are parallel to the pole-unit bases. If for some reason only one or two phases are not fully closed, adjustment should be made at the interphase clamp of that unit. The switch is properly closed when all blades are parallel to the pole-unit base, the operating linkage is in the over-toggle position, and the yellow flag on the top of the interrupter is not visible.
      (2) When reconfiguring a factory-assembled switch to an alley arm switch, follow S&C installation Drawing Number ED-8038 which is shipped with all S&C switches.
   L. For Inertia Switch
      (1) Verify the switch operation by closing the switch with the minimum force required to fully close at the switch. If for some reason all phases do not close, loosen the phase crank clamp of the phase that is not closed, manually close the switchblade, and tighten the clamp. Note that the load interrupter flag (LIF) is no longer coming installed on new switch. If the LIF is present, it should be retrofitted with interrupter shunt, Code 343085.

Note: Do not lift switch by main contact during installation.

Installation Instructions (continued)

12. Operation: The U.S. Switch should be opened or closed with one swift operation. Caution: **Do not** tease the switch while opening or closing. After closing the switch, look up to make sure all phases are fully closed. The switch blade must be parallel with the phase unit channel. The following are the instructions for making sure that each of the phase unit interrupters are latched:
   A. On the Cooper switch, the worker must look up at the rods on the interrupter to make sure that they are latched before opening the switch.
   B. On the S&C switch, there is a yellow flag on the top of the interrupter to warn the worker if the interrupter is open or closed. The yellow flag is present when the switch is open. In other words, the worker must look up at the interrupter to verify that a yellow flag is not present and that the blade assembly is parallel to the pole-unit base when the switch is closed.
   C. On pre-2010 Inertia switches, there is a reflective yellow flag on the rotating switchblade that is visible when the switch is open or the interrupter is not latched. The worker must look up at the interrupter when closing the switch to verify that the yellow flag is not present. Properly latched interrupter flags can be seen when viewing the switch on the crossarm pole face from a distance of at least 30 feet.
   D. On post-2010 Inertia switches, the reflective yellow flags described in C have been replaced by interrupter shunts. The worker must be sure that the interrupter trip arm has passed by the catch arm before opening the switch.

Automated Switch Only – Inertia Switch and Motor Switch Operator (MSO)

13. Remove the control rods, MSO, and rod splices from the crate. Remove the top boards of the shipping crate and attach hoisting slings to the 5/8" holes in the two outermost phase base channels.
   Note: The automated switch is completely unitized on a common steel crossarm at the factory and requires no field adjustment. The switch is always mounted in the underarm position. Maintain all required clearances when installing this equipment.
14. Install the switch portion of the automated switch as indicated in the "Manual Switch" section. **Exception:** See Note 5 on Page 1 for automated extension link requirement and line sensor bracket.
15. Drill two MSO mounting holes at 33-1/2" center-to-center distance in line with the switch control rod. Install the MSO, using two 5/8" pole bolts Verify the MSO operating mechanism is in line with the control rod (see Figure 15 on Page 24).
16. Install the eyenuts and bolts through the pole and make alignment adjustments so that the control rod makes a smooth transition from the switch bell crank to the MSO output shaft. Tighten the eyenuts and space bolt nuts on the pole and cut off any excess.
17. Verify that the switch and the MSO are in the **closed** position. Attach the MSO adjusting screw and control rod clamp to the MSO output shaft and cut the fiberglass control rod as shown in Figure 15 on Page 24.
18. Connect the control rod to the control rod clamp. Adjust the control rod to have a slight compression load (use approximately 1-1/4 inches of compression for 30 feet of rod) against the switch bell crank when in the fully closed (up) position by using the MSO adjusting screw, and/or adjusting the adjusting screw control rod clamp position. Remove the factory-installed shipping ties from the rotating blade/female clips.
19. Check all control rod clamps and mounting hardware for proper torque. Operate the switch slowly several times to verify that the moving switch contact blades fully seat in the female contact clips. The automated switch moving contact blade is in line with the insulators when the switch is fully closed. Adjust the MSO control rod by adjusting the nut screw as required, to establish full seating of the contacts. The control rod should be adjusted so that the switch fully closes with the interrupters latched, when the switch is operated slowly. **Note:** During manual switching operations, the automated switch should be operated with rapid and continuous motion from start to finish. Return the handle and operating motor interlock pin to their storage positions inside the MSO when adjustments are completed.
20. A control power source of 120 Vac is required as follows.
   A. Common Neutral Systems: The supply voltage transformer can be installed on the SCADA switch pole or an adjacent pole. The control, switch arm, and transformer neutral shall all be connected to the pole ground. The pole ground shall be connected to the common neutral conductor.

Table 4 Bill of Material for Installing 25 kV Underarm Side-Break Switches [1] (continued)

Item	Description	Code	Document
37	Connector, Compression-Type (for use with Items 35 and 36)	To Be Coded	041010
38	Grip, Preformed, for #6-6/1 Bare ACSR Neutral and #6 Insulation Aluminum	184239	–
39	Conduit, Rigid, PVC, 1-1/2" Schedule 80 (supplied in 10 or 20 feet lengths)	360433	–
40	Nipple, Conduit, PVC, 1-1/2" (length as required)	To Be Coded	–
41	Bend, 90°, R=5-3/4", PVC, 1-1/2", Slip Fit	To Be Coded	–
42	LR-Fitting, PVC, 1-1/2", Slip Fit, Kralet or Equivalent	To Be Coded	–
43	Molding, U-Shaped, Rigid PVC, 2"	360672	021924
44	Line Sensor Bracket (applicable only to Inertia MSO switch)	To Be Coded	–

[1] See Table 9 on Page 9 for codes of replacement parts for the U.S. Switch.

Table 5 Accessory Equipment

Description	Code
Lever Extension for S&C Underarm Switches (see Detail C on Page 25)	375049
G.O. 95 PVC Control Rod Shroud (10 foot)	341504

SHEET #	SHEET TITLE:	SCALE:		REVISIONS			ENGINEER'S STAMP	PROJECT TITLE:
E.9.5	POLE 1&4 SWITCH DETAILS SHEET-1	NTS	DRAWN BY: NATRON CHECKED BY: JHA APPROVED BY: JHA DOCUMENT DATE: 10/17/2013	# / DATE / ISSUE A 22-MAY-13 FOR SUBMITTAL B 27-JUN-13 AHJ COMMENTS C 02-AUG-13 FOR RESUBMITTAL D 21-OCT-13 PHASE 2- UPDATE	Pristine Sun PRISTINE SUN, LLC 649 Mission Street, 5th Floor, San Francisco, CA 94105 JOB NUMBER: 10210		REGISTERED PROFESSIONAL ENGINEER Charles W. Cunha No. 12478 Exp. 9-30-13 ELECTRICAL STATE OF CALIFORNIA	2103-HILL 5475 JACK CREEK RD. TEMPLETON, CA 93465 APN: 039-191-03-5

Table 4 Bill of Material for Installing 25 kV Underarm Side-Break Switches [1] (continued)

Item	Description	Code	Document
37	Connector, Compression-Type (for use with Items 35 and 36)	To Be Coded	041010
38	Grip, Preformed, for #6-6/1 Bare ACSR Neutral and #6 Insulation Aluminum	184239	–
39	Conduit, Rigid, PVC, 1-1/2" Schedule 80 (supplied in 10 or 20 feet lengths)	360433	–
40	Nipple, Conduit, PVC, 1-1/2" (length as required)	To Be Coded	–
41	Bend, 90°, R=5-3/4", PVC, 1-1/2", Slip Fit	To Be Coded	–
42	LR-Fitting, PVC, 1-1/2", Slip Fit, Kralet or Equivalent	To Be Coded	–
43	Molding, U-Shaped, Rigid PVC, 2"	360672	021924
44	Line Sensor Bracket (applicable only to Inertia MSO switch)	To Be Coded	–

[1] See Table 9 on Page 9 for codes of replacement parts for the U.S. Switch.

Table 5 Accessory Equipment

Description	Code
Lever Extension for S&C Underarm Switches (see Detail C on Page 25)	375049
G.O. 95 PVC Control Rod Shroud (10 foot)	341504

Generic Switch Requirements

Notes

1. Bill of material items shown in this figure are common for the various switch configurations that follow in this document.
2. The U.S. Switch is furnished with 30 feet of fiberglass control rod and the splices for the fiberglass.
3. Install control rod guides at 5-foot (maximum) intervals. Control rod guides may be spaced 5 to 6 feet between the operating handle to the first eyenut and between the last eyenut to the bell crank connection.
4. The U.S. Switch is furnished with a steel arm and three dead-end brackets.

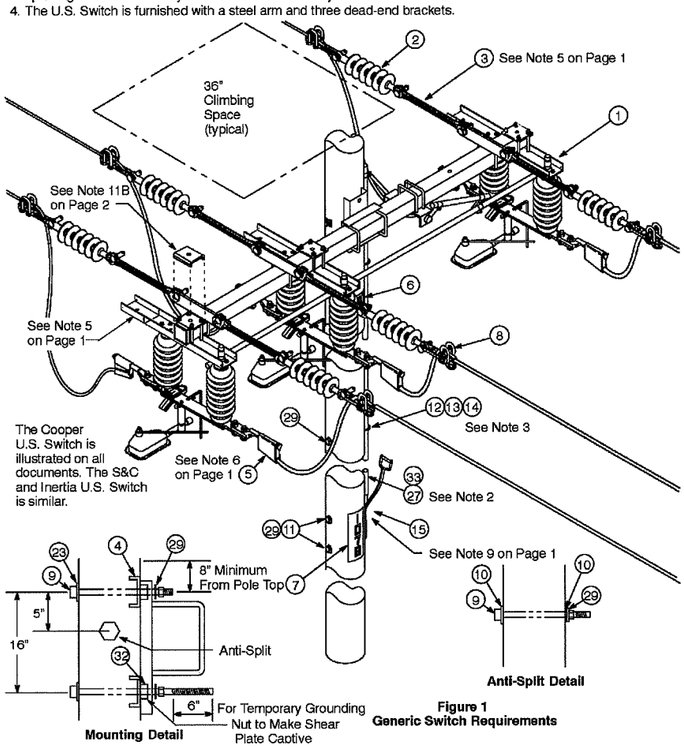

Figure 1
Generic Switch Requirements

3-Wire, Dead-End Riser Construction

Notes

1. Regarding dead-end riser installations, the preferred construction is to install the U.S. Switch in a normal tangent configuration one span before the riser. This is to eliminate pole "clutter" on the riser pole. If field conditions do not allow for a switch to be installed one span before the riser, the U.S. Switch may be installed as a riser switch.
2. For details on the riser installation, see the "Risers" section of the *Electric Overhead Construction Manual*.
3. The U.S. Switch is capable of handling 3,500 pounds per conductor of three-wire dead-end tension.
4. See Page 10 for common bill of material requirements.
5. See the "Guys" section of the *Electric Overhead Construction Manual* for down guy requirements.
6. Where the switch is a SCADA switch and the arm is grounded, use Part 3 insulators and cover all three phases with insulator/line covers.

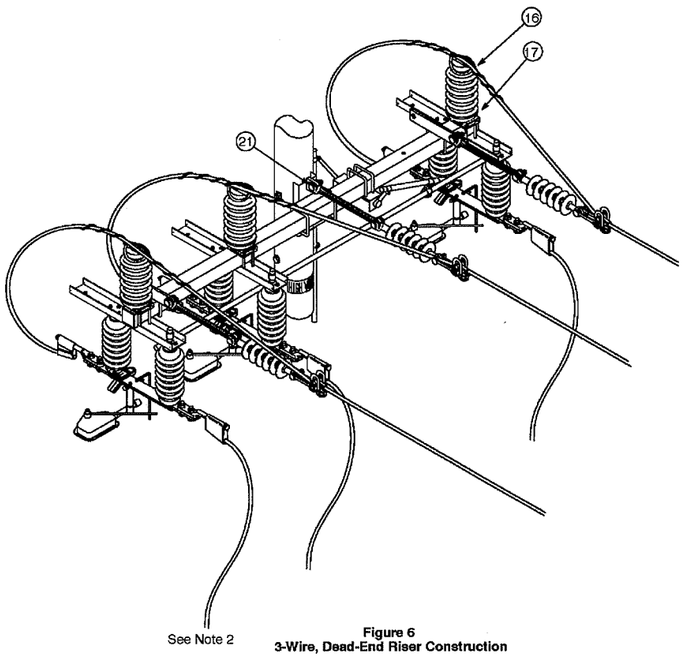

Figure 6
3-Wire, Dead-End Riser Construction

SHEET # E.9.6

SHEET TITLE: POLE 1&4 SWITCH DETAILS SHEET-2

SCALE: NTS

DRAWN BY: NATHAN
CHECKED BY: JHA
APPROVED BY: JHA
DOCUMENT DATE: 10/17/2013

#	DATE	ISSUE
A	22-MAY-13	FOR SUBMITTAL
B	27-JUN-13	AHJ COMMENTS
C	02-AUG-13	FOR RESUBMITTAL
D	21-OCT-13	PHASE 2- UPDATE

Pristine Sun
PRISTINE SUN, LLC
649 Mission Street, 5th Floor,
San Francisco, CA 94105
JOB NUMBER: 10210

ENGINEER'S STAMP

PROJECT TITLE:
2103-HILL
5475 JACK CREEK RD.
TEMPLETON, CA 93465
APN: 039-191-03-5

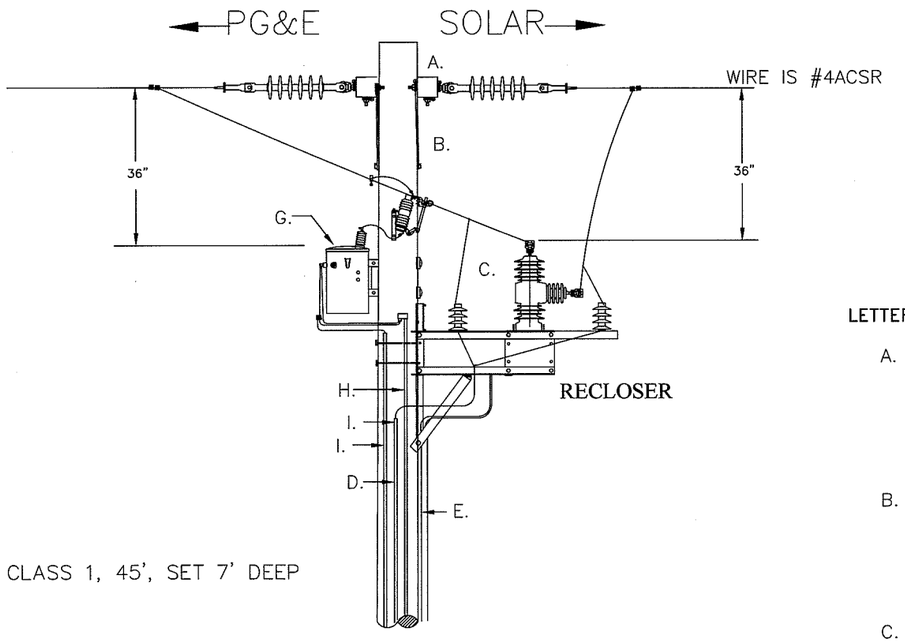

POLE IS CLASS 1, 45', SET 7' DEEP

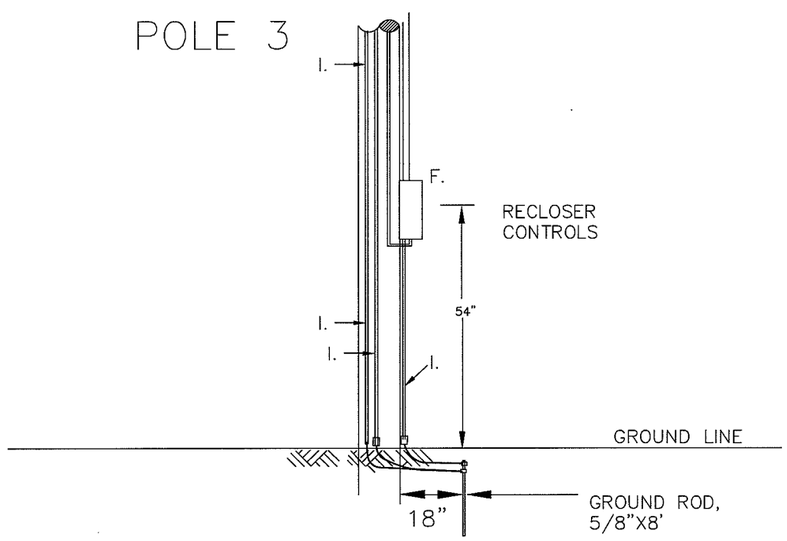

NOTE: RECLOSER MUST FACE SOLAR FIELD, VOLTAGE SENSORS ARE INSIDE HORIZONTAL BUSHINGS AND MUST SENSE GENERATOR SIDE. INSTALL RECLOSER PER COOPER POWER SYSTEMS (MANUFACTURER'S) INSTRUCTIONS.

LETTER	QTY	ITEM
A.	1	CROSSARM, 8' STD., 3-3/4"x4-3/4"
	3	BOLT, CROSSARM, 3/4" x 26"
	3	WASHER, SQUARE, 13/16"
	6	INSULATOR, SUSPENSION TYPE, 12kV
	2	SIGN, HIGH VOLTAGE, YELLOW PLASTIC (ON X-ARM)
	3	DEAD END CLAMP, HUBBLE CLEVIS BAIL, CD442A OR EQUIVALENT
B.	2	CROSSARM BRACE, FLAT, 1/4" x 36"
	2	WASHER, ROUND, 9/16"
	1	WASHER, DOUBLE COIL SPRING LOCK STEEL 1/2"
	1	SCREW, LAG, 1/2" x 4 1/2"
	2	BOLT, CROSSARM, 1/2" x 8"
C.	1	COOPER NOVA27 RECLOSER (27KV) WITH 6 ARRESTERS
	2	BOLT, CROSSARM, 3/4" x 12"
	2	WASHER, SQUARE, 13/16"
	2	COVER, BOLT
	20'	5kV INSULATED #4 AL WIRE
	6	SALSBARY WILDLIFE COVERS (5KV INSULATED BOOTS)
D.	30'	1" PVC CONDUIT
	40'	#4 CU GROUND WIRE
E.	25'	1" PVC CONDUIT
	30'	CONTROL WIRE FOR FORM 6 RECLOSER CONTROLLER
F.	1	COOPER FORM 6 CONTROLLER
	2	SCREW, LAG, 1/2" x 4 1/2"
G.	1	5KVA 12KV/120-240V TRANSFORMER
	2	CUTOUT, FUSED, 100-AMP, 27-KV DROPOUT NON-LOADBREAK
	2	1 AMP FUSES
	2	BIRD GUARD (W.H. SALISBURY & CO. CAT#21116)
	2	CUTOUT, BRACKET, 27KV (AB CHANCE/HUBBELL CAT#C710112PD)
	15'	5KV INSULATED #4 CU
	2	BOLT, CROSSARM, 3/4" x SIZE AS REQUIRED
	2	BOLT COVER
	2	WASHER, SPRING 3/4"
H.	30'	1" PVC CONDUIT
	35'	3X#10 CU 600V, USE-2 AND #6 CU GROUND
	1	1" PVC CONDUIT BODY, TYPE LL (CARLON CAT#E984F-CAR)
I.	10'	1" PVC CONDUIT AND #6 CU BARE GROUND

SEPARATE GROUND LEADS FOR RECLOSER(WITH ARRESTERS), CONTROLS & TRANSFORMER

PROJECT TITLE:
2103-HILL
5475 JACK CREEK RD.
TEMPLETON, CA 93465
APN: 039-191-03-5

ENGINEER'S STAMP
REGISTERED PROFESSIONAL ENGINEER
Charles W. Cushing
No. 12478
Exp.9-30-13
ELECTRICAL
STATE OF CALIFORNIA

Pristine Sun
PRISTINE SUN, LLC
649 Mission Street, 5th Floor,
San Francisco, CA 94105
JOB NUMBER: 10210

REVISIONS

#	DATE	ISSUE
A	22-MAY-13	FOR SUBMITTAL
B	27-JUN-13	AHJ COMMENTS
C	02-AUG-13	FOR RESUBMITTAL
D	21-OCT-13	PHASE 2- UPDATE

DRAWN BY:	NATRON
CHECKED BY:	JHA
APPROVED BY:	JHA
DOCUMENT DATE:	10/17/2013

SCALE: NTS

SHEET TITLE: POLE 3 RECLOSER DETAILS

SHEET #: E.9.7

RISER POLE

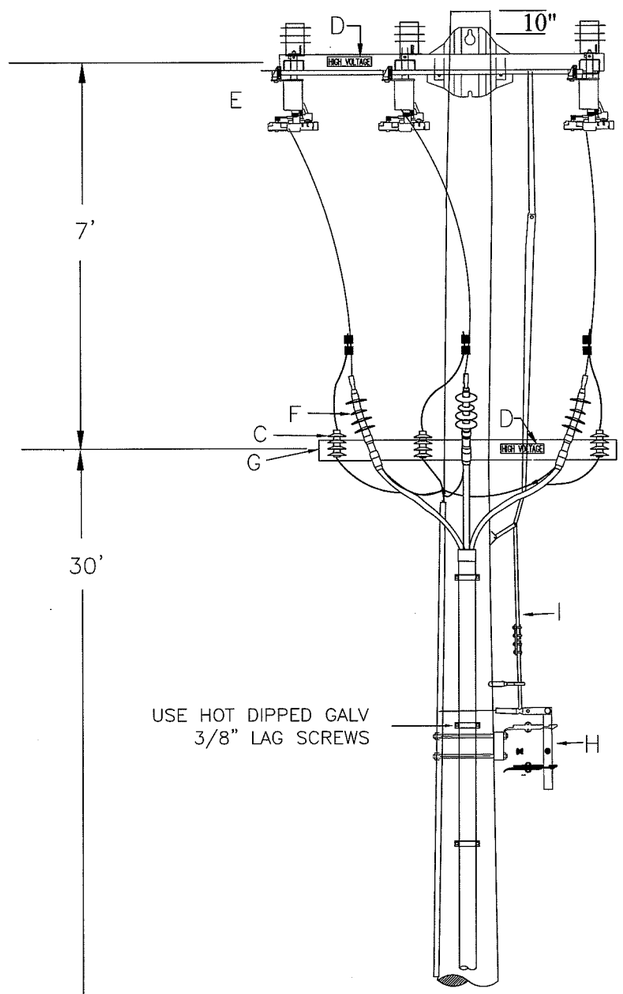

NOTES:

1. PVC IS NOT ALLOWED IN CLIMBING SPACE.
2. SEE PG&E 066195 FOR ADDITIONAL SWITCH INSTALLATION INFORMATION.

POLE 4

POLE IS CLASS 1, 45', SET 7' DEEP

MATERIALS

A – 12KV SUSPENSION INSULATOR, DEAD END CLAMP, HUBBLE CLEVIS BAIL, CD442A OR EQUIVALENT.
B – NOT USED
C – 12KV LIGHTNING ARRESTER, DISTRIBUTION CLASS
D – HIGH VOLTAGE SIGN (4, 1 EACH SIDE OF X–ARM)
E – 25KV LINE BOSS SIDE BREAK SWITCH
F – 12KV TERMINAL
G – 8' WOOD CROSSARM
H – RECIPROCATING HANDLE
I – CONNECTING ROD FOR SWITCH MUST HAVE FIBERGLASS LINK.

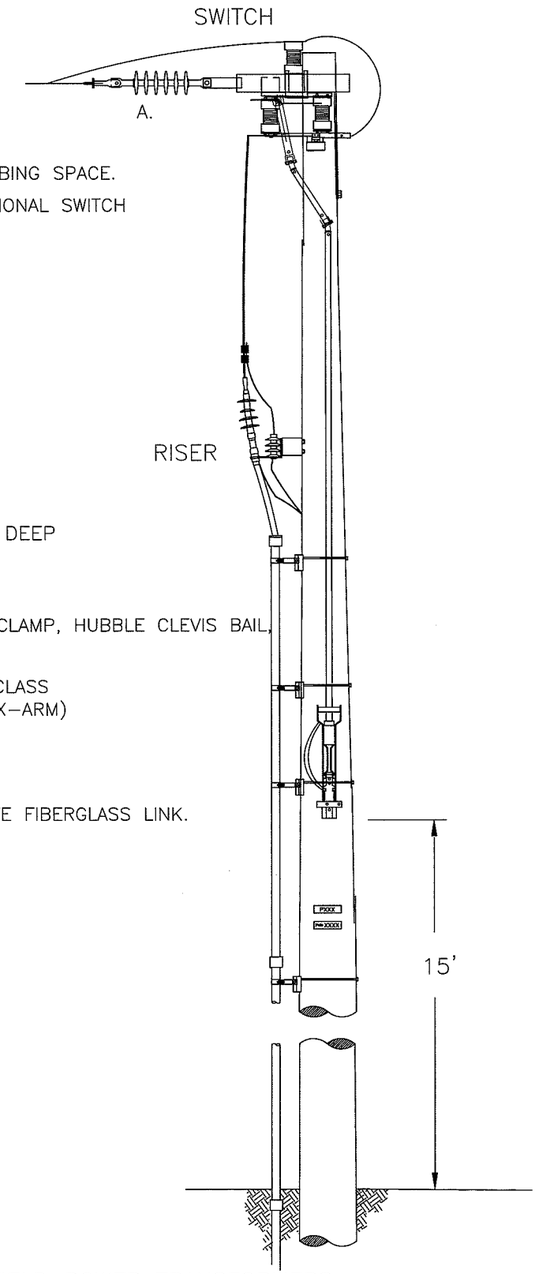

#4 CU CU BARE
GROUND IN 1" SCHD
40 PVC

UL LISTED GROUND
CONNECTOR

COPPER CLAD STEEL
GROUND ROD, 5/8"X8'

18"

15KV CABLE (IN CONDUIT) FROM SOLAR FIELD POWER TRANSFORMERS

PROJECT TITLE:

2103-HILL
5475 JACK CREEK RD.
TEMPLETON, CA 93465
APN: 039-191-03-5

ENGINEER'S STAMP

REGISTERED PROFESSIONAL ENGINEER
Charles W. Cushman
No. 12478
Exp.9-30-13
ELECTRICAL
STATE OF CALIFORNIA

Pristine Sun
PRISTINE SUN, LLC
649 Mission Street, 5th Floor,
San Francisco, CA 94105
JOB NUMBER: 10210

REVISIONS

#	DATE	ISSUE
A	22-MAY-13	FOR SUBMITTAL
B	27-JUN-13	AHJ COMMENTS
C	02-AUG-13	FOR RESUBMITTAL
D	21-OCT-13	PHASE 2– UPDATE

DRAWN BY:	NATRON
CHECKED BY:	JHA
APPROVED BY:	JHA
DOCUMENT DATE:	10/17/2013

SCALE: NTS

SHEET TITLE: POLE 4 RISER DETAILS

SHEET #: E.9.8

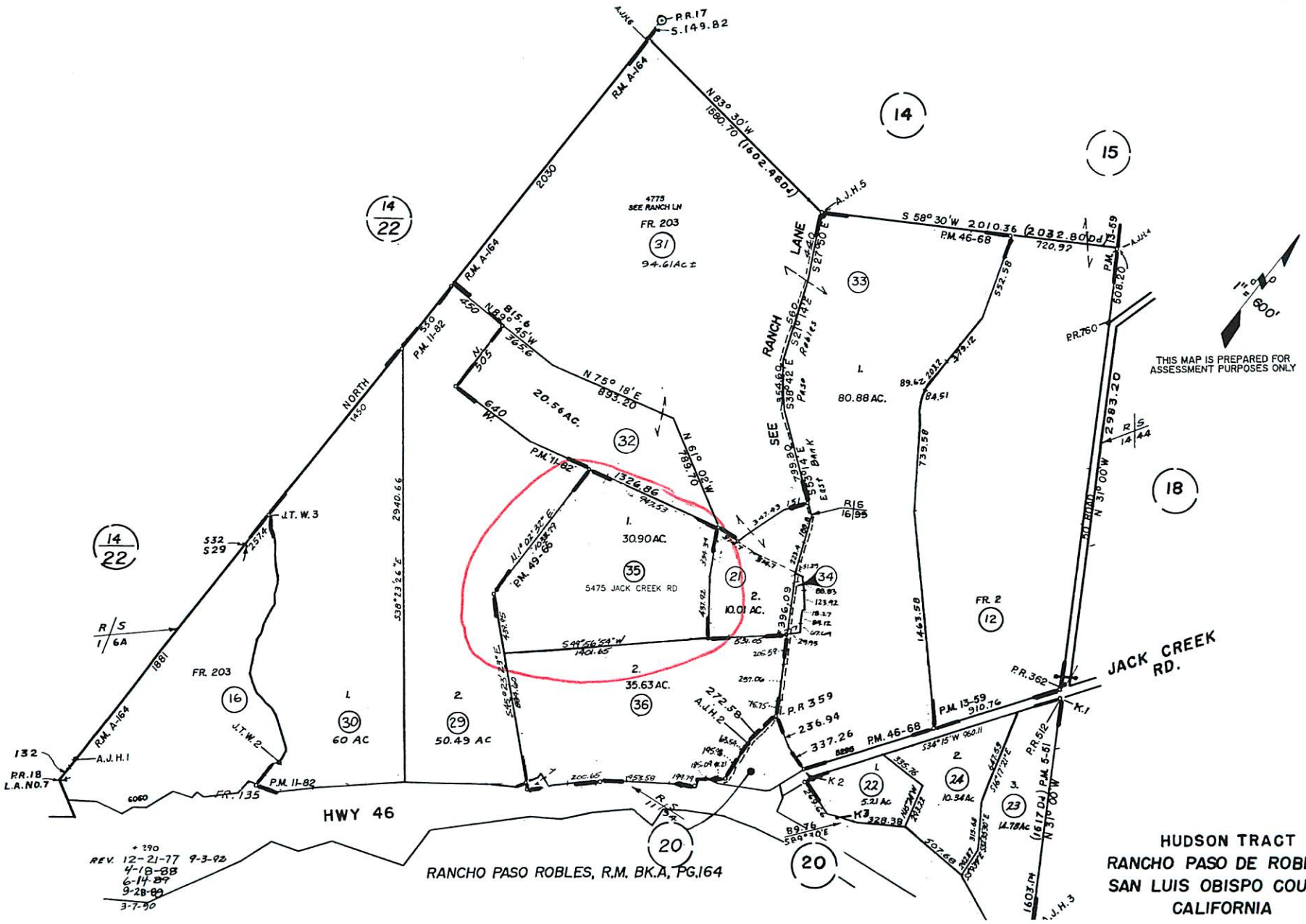
HUDSON TRACT
RANCHO PASO DE ROBLES
SAN LUIS OBISPO COUNTY
CALIFORNIA
RANCHO PASO ROBLES, R.M. BK.A, PG.164
HWY 46
JACK CREEK RD.
SEE RANCH LANE
NORTH
5475 JACK CREEK RD
4775 SEE RANCH LN
FR. 203
FR. 135
FR. 2
30.90 AC.
35.63 AC.
10.01 AC.
20.56 AC.
80.88 AC.
60 AC
50.49 AC
94.61 Ac ±
5.21 Ac
10.34 Ac
14.78 Ac
THIS MAP IS PREPARED FOR ASSESSMENT PURPOSES ONLY
1" = 600'
REV. 12-21-77 9-3-92
4-18-88
6-14-89
9-28-89
3-7-90

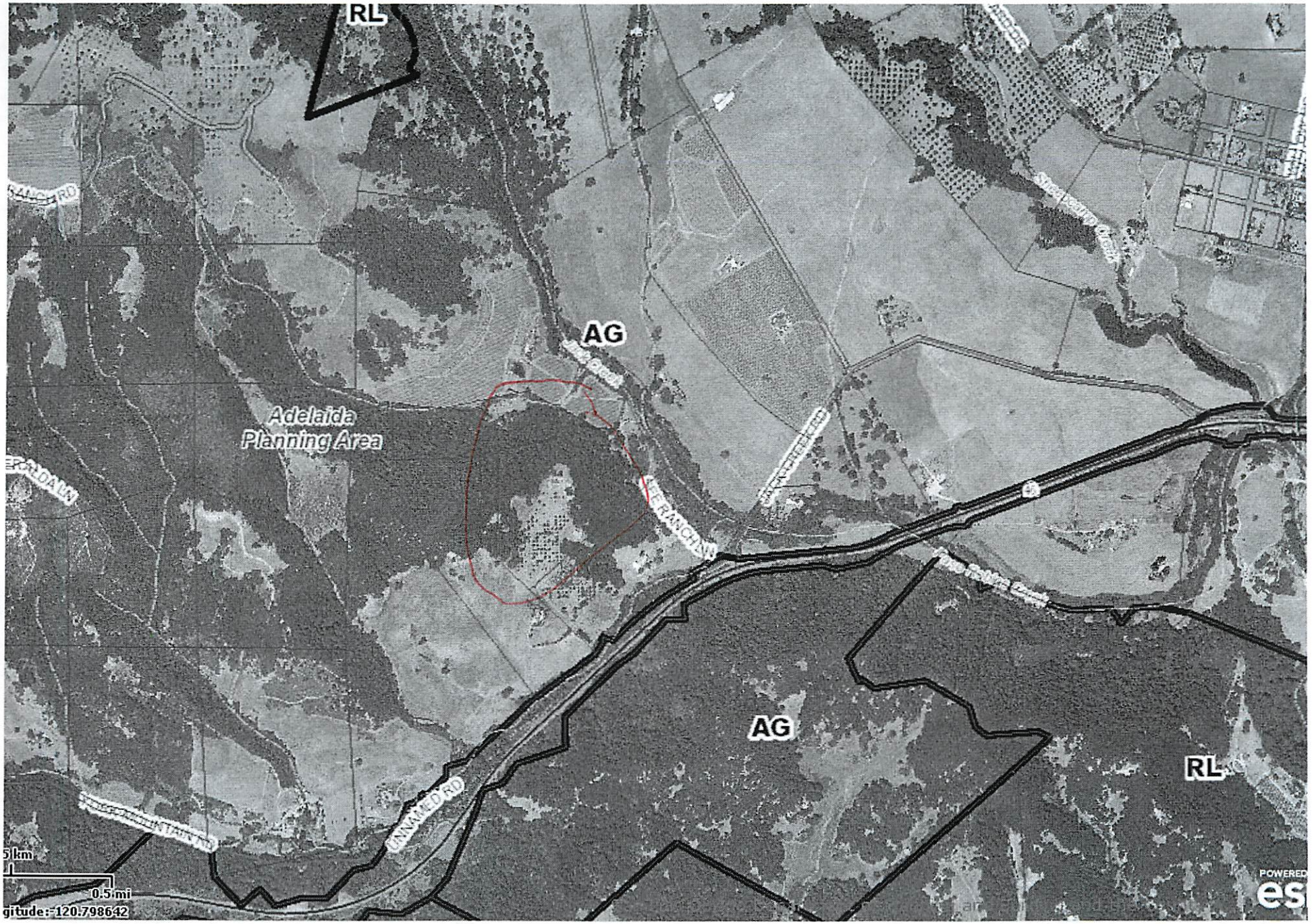
RL
AG
Adelaida
Planning Area
AG
RL
UNNAMED RD
0.5 mi
gitude: -120.798642

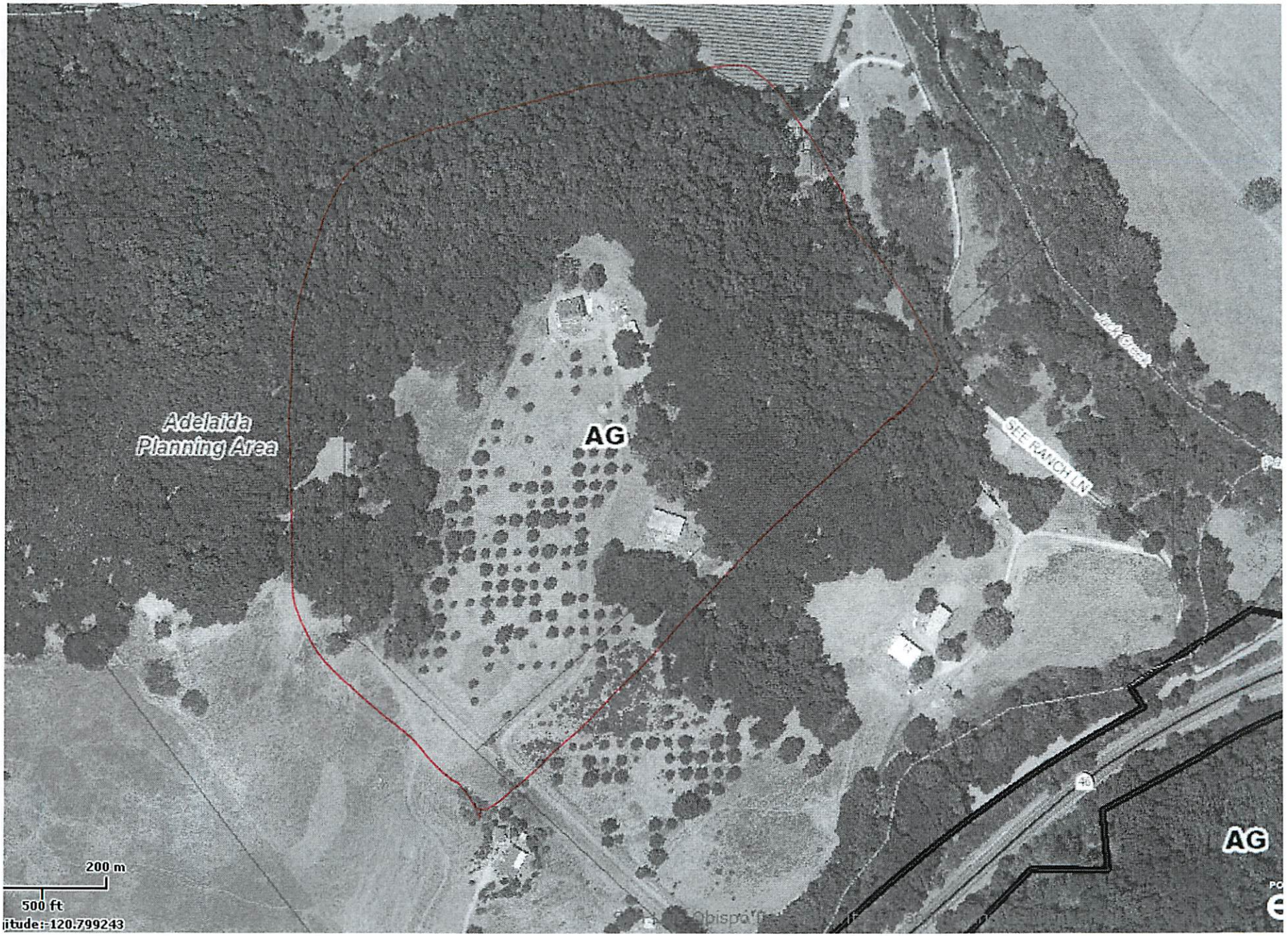
Adelaida
Planning Area
AG
SEE RANCH LN
AG
200 m
500 ft
itude: -120.799243

Parcel Summary Report For Parcel # 039-191-035

10/25/2013
12:01:27PM

San Luis Obispo County Department of Planning and Building
County Government Center San Luis Obispo, California 93408 Telephone: (805) 781-5600

People Information

Role	Name and Address
OWN	HILL CHARLES W 5475 JACK CREEK RD TEMPLETON CA 93465-5802
OWN	HILL CHARLES W & DONNA M TRUST
OWN	HILL DONNA M

Address Information

Status	Address
P	05475 JACK CREEK RD RADEL

Lot Information:

Tract / Twnshp	Block / Range	Section	Community:	Plan/Area:	Lue 1:	Lue 2:	Lue 3:	Lot:	Flags:	Misc
COAL89-	302	0001	Rural Adelaida	Adelaida	AG			Y		

Parcel Information

Status	Description
Active	PM 49-66 PAR 1

Notes

Tax Districts

TEMPLETON
SAN LUIS OBISPO JT(27,40)
TEMPLETON PUBLIC
NO. 05
AREA NO. 21

Parcel Summary Report For Parcel # 039-191-035

San Luis Obispo County Department of Planning and Building
County Government Center San Luis Obispo, California 93408 Telephone: (805) 781-5600

Case Information

Case Number:	Case Status:	
98742	FNL	Primary Parcel

Description:
ELECT. FOR WELL

98743	FNL	Primary Parcel

Description:
ELECT. FOR EXIST. AG. BARN/SHOP

C6132	FNL	Primary Parcel

Description:
SFD W/ATT GARAGE & TEMPORARY TRAILER ENGR TAYLOR&SYFAN/ DROPPED FRONT PORCH & EXTENDED LIVING SPACE 280 SQFT 8/20/07

C6133	FNL	Primary Parcel

Description:
REGULAR GRADING FOR DRIVE & PAD EMK-R.GRIDER,RCE/BLDG ALL ON CUT/HAS SOILS RPT

DRC2011-00074	APV	Primary Parcel

Description:
1008 SOLAR MODULES, INCLUDING ACCESS ROADS, APPROXIMATELY 3 ACRES OF SITE DISTURBANCE

DRC2013-00032	REC	Primary Parcel

Description:
MUP FOR 1008 SOLAR MODULES USING(INCLUDING ACCESS ROADS) APPROX. 3 ACRES; 17'-19' BETWEEN ROWS OF PANELS.

PMT2002-12252	EXP	Primary Parcel

Description:
GRADING

PMT2007-02042	FNL	Primary Parcel

Description:
CONVERT TEMPORARY TRAILER (C6132) TO STORAGE

PMT2007-02460	FNL	Primary Parcel

Description:
PHOTOVOLTAIC - ROOF MOUNTED

PMT2012-02140	ISS	Primary Parcel

Description:

Parcel Summary Report For Parcel # 039-191-035

San Luis Obispo County Department of Planning and Building
County Government Center San Luis Obispo, California 93408 Telephone: (805) 781-5600

PHOTOVOLTAIC SOLAR FARM (PHASE ONE) 250 KW AC (WHOLESALE) WITH ATI SINGLE AXIS TRACKERS WITH ONE INVERTER PAD FOR LOCAL DISTRIBUTION POWER CONSUMPTION (1.75 ACRE OF DISTURBANCE) AND GRADING (5,640 CY) INCLUDING IMPROVEMENT OF A PORTION OF THE EXISTING DRIVEWAY (INSTALL DECOMPOSED GRANITE) AND REPAIRS TO EXISTING BRIDGE. A SEPARATE PERMIT SHALL BE SUBMITTED FOR PHASE TWO.
DRC2011-00074) QSP: JASON VINE, P.E. PHONE:530.526.7493, TRIGONENGINEERS.COM

S890191L RDD Primary Parcel

Description:

LOT LINE ADJUSTMENT FOR 2 PARCELS