SAN LUIS OBISPO COUNTY

DEPARTMENT OF PLANNING AND BUILDING

THIS IS A NEW PROJECT REFERRAL

DATE: 7/29/2014

TO: _____

FROM: Airlin Singewald (805-781-5198 or asingewald@co.slo.ca.us)
North County Team / Development Review

PROJECT DESCRIPTION: DRC2014-00006 PORTNOFF – Proposed minor use permit for one 100-foot tall telecommunications tower, two whip antennas, six dishes (9.0, 28.27, 50.27[3], 78.54 sf each), 15x15 foundation (total area within lease enclosure is 2,500 sf). Existing 170 sf shelter to be modified and used for facility. Site location is 1945 Adelaida Rd, Paso Robles. APN: 026-233-029

Return this letter with your comments attached no later than: 14 days from receipt of this referral. CACs please respond within 60 days. Thank you.

PART 1 - IS THE ATTACHED INFORMATION ADEQUATE TO COMPLETE YOUR REVIEW?

- ❑ YES (Please go on to PART II.)
- ❑ NO (Call me ASAP to discuss what else you need. We have only 10 days in which we must obtain comments from outside agencies.)

PART II - ARE THERE SIGNIFICANT CONCERNS, PROBLEMS OR IMPACTS IN YOUR AREA OF REVIEW?

- ❑ YES (Please describe impacts, along with recommended mitigation measures to reduce the impacts to less-than-significant levels, and attach to this letter)
- ❑ NO (Please go on to PART III)

PART III - INDICATE YOUR RECOMMENDATION FOR FINAL ACTION.

Please attach any conditions of approval you recommend to be incorporated into the project's approval, or state reasons for recommending denial.

IF YOU HAVE "NO COMMENT," PLEASE SO INDICATE, OR CALL.

_____

_____

_____

Date	Name	Phone

DRC2014-00006 PORTNOFF WP & .

MINOR USE PERMIT

ONE 100-FOOT TALL TELECOMMUNICATIONS TOWER, TWO NCADEL/ NCADEL

RL

GENERAL APPLICATION FORM

San Luis Obispo County Department of Planning and Building

APPLICATION TYPE - CHECK ALL THAT APPLY

- ☐ Emergency Permit
- ☐ Tree Permit
- ☐ Plot Plan
- ☐ Zoning Clearance
- ☐ Site Plan
- ☑ Minor Use Permit
- ☐ Variance
- ☐ Other
- ☐ Conditional Use Permit/Development Plan
- ☐ Surface Mining/Reclamation Plan
- ☐ Curb, Gutter & Sidewalk Waiver
- ☐ Modification to approved land use permit

APPLICANT INFORMATION Check box for contact person assigned to this project

☑ Landowner Name W.P. and J.C. Portnoff Revocable Trust c/o Suzanne Valoff Daytime Phone _____
Mailing Address 179 Niblick Road, Paso Robles, California Zip Code 93446
Email Address: _____

☑ Applicant Name Pacific Gas and Electric Company (PG&E), Kris Vardas, Senior Land Planner Daytime Phone 805-543-2096
Mailing Address 142 Cross Street, Suite 130, San Luis Obispo, California Zip Code 93401
Email Address: KAV6@pge.com

☑ Agent Name Kris Vardas (see above, Applicant) Daytime Phone _____
Mailing Address _____ Zip Code _____
Email Address: _____

PROPERTY INFORMATION

Total Size of Site: 90.41 acres Assessor Parcel Number(s): 026-233-029
Legal Description: 35 degrees 38'49.64"N 120 degrees 44'14.39"W MDBM
Address of the project (if known): 1945 Adelaida Road, Paso Robles, California
Directions to the site (including gate codes) - describe first with name of road providing primary access to the site, then nearest roads, landmarks, etc.: Head west on 24th Street for 0.88 mile, turn onto Nacimiento Lake Drive (1.43 miles), turn left onto Adelaida Road and go 0.4 mile. Site is accessed by a gated private access driveway (approach is on left side of Adelaida Road).
Describe current uses, existing structures, and other improvements and vegetation on the property: Mult. telecommunications facilities, equipment shelter, residential/accessory structures, access, oak woodland, grasses, shrubs

PROPOSED PROJECT

Describe the proposed project (inc. sq. ft. of all buildings): One 100-foot tall telecommunications tower, two whip antennas, six dishes (9.0, 28.27, 50.27[3], 78.54 sf each) 15x15 foundation (total area within lease enclosure is 2,500 sf). Existing 170 sf shelter to be modified and used for facility.

LEGAL DECLARATION

I, the owner of record of this property, have completed this form accurately and declare that all statements here are true. I do hereby grant official representatives of the county authorization to inspect the subject property.

Property owner signature _____ Date 6/13/14

FOR STAFF USE ONLY

Reason for Land Use Permit: _____

LAND USE PERMIT APPLICATION

San Luis Obispo County Department of Planning and Building File No _____

Type of project: ☐ Commercial ☐ Industrial ☐ Residential ☐ Recreational ☑ Other

Describe any modifications/adjustments from ordinance needed and the reason for the request (if applicable): None requested

Describe existing and future access to the proposed project site: Site is accessed by existing paved/unpaved road serving the property, including existing telecommunications facilities. No new access improvements are proposed.

Surrounding parcel ownership: Do you own adjacent property? ☐ Yes ☑ No
If yes, what is the acreage of all property you own that surrounds the project site? N/A

Surrounding land use: What are the uses of the land surrounding your property (when applicable, please specify all agricultural uses):
North: Residential Rural South: Rural Lands
East: Residential Rural West: Rural Lands

For all projects, answer the following:
Square footage and percentage of the total site (approximately) that will be used for the following:
Buildings: _____ sq. feet _____ % Landscaping: _____ sq. feet _____ %
Paving: 225 sq. feet <.01% % Other (specify) _____
Total area of all paving and structures: 225 sf proposed ☑ sq. feet ☐ acres
Total area of grading or removal of ground cover: 2,500 sf lease area ☑ sq. feet ☐ acres
Number of parking spaces proposed: 0 Height of tallest structure: 100 ft tower (110 feet with whips)
Number of trees to be removed: 1 Type: Small scrub oak (less than 6" in diameter)
Setbacks: Front 1,662 ft Right 2,120 ft Left 490 ft Back 382 ft

Proposed water source: ☐ On-site well ☐ Shared well ☐ Other N/A
☐ Community System - List the agency or company responsible for provision: N/A
Do you have a valid will-serve letter? ☐ Yes ☐ No (If yes, please submit copy)

Proposed sewage disposal: ☐ Individual on-site system ☐ Other N/A
☐ Community System - List the agency or company responsible for sewage disposal: N/A
Do you have a valid will-serve letter? ☐ Yes ☐ No (If yes, please submit copy)

Fire Agency: List the agency responsible for fire protection: CalFire

For commercial/industrial projects answer the following:
Total outdoor use area: N/A ☐ sq. feet ☐ acres
Total floor area of all structures including upper stories: N/A sq. feet

For residential projects, answer the following:
Number of residential units: N/A Number of bedrooms per unit: N/A
Total floor area of all structures including upper stories, but not garages and carports: N/A
Total of area of the lot(s) minus building footprint and parking spaces: N/A

ENVIRONMENTAL DESCRIPTION FORM

San Luis Obispo County Department of Planning and Building File No _____

The California Environmental Quality Act (CEQA) requires all state and local agencies to consider and mitigate environmental impacts for their own actions and when permitting private projects. The Act also requires that an environmental impact report (EIR) be prepared for all actions that may significantly affect the quality of the environment. The information you provide on this form will help the Department of Planning and Building determine whether or not your project will significantly affect the quality of the environment.

To ensure that your environmental review is completed as quickly as possible, please remember to:

a. Answer **ALL** of the questions as accurately and completely as possible.
b. Include any additional information or explanations where you believe it would be helpful or where required. Include additional pages if needed.
c. If you are requesting a land division or a re-zoning, be sure to include complete information about future development that may result from the proposed land division or rezoning.
d. Include references to any reports or studies you are aware of that might be relevant to the questions asked or the answers you provide.

Should a determination be made that the information is inaccurate or insufficient, you will be required to submit additional information upon request.

Physical Site Characteristic Information

Your site plan will also need to show the information requested here:

1. Describe the topography of the site:
   Level to gently rolling, 0-10% slopes: 0.057 acres
   Moderate slopes of 10-30%: _____ acres
   Steep slopes over 30%: _____ acres
2. Are there any springs, streams, lakes or marshes on or near the site? ☑ Yes ☐ No
   If yes, please describe: Un-named drainage along Adelaida Road, approximately 0.32 mile downslope from the site.
3. Are there any flooding problems on the site or in the surrounding area? ☐ Yes ☑ No
   If yes, please describe: _____
4. Has a drainage plan been prepared? ☐ Yes ☑ No
   If yes, please include with application.
5. Has there been any grading or earthwork on the project site? ☑ Yes ☐ No
   If yes, please explain: Site was previously graded for equipment facility (now abandoned); existing access and telecommunications facilities.
6. Has a grading plan been prepared? ☐ Yes ☐ No
   If yes, please include with application.
7. Are there any sewer ponds/waste disposal sites on/adjacent to the project? ☐ Yes ☐ No
8. Is a railroad or highway within 300 feet of your project site? ☐ Yes ☑ No
9. Can the proposed project be seen from surrounding public roads? ☑ Yes ☐ No
   If yes, please list: Adelaida Road, Nacimiento Lake Drive (visual analysis currently underway)

Water Supply Information

1. What type of water supply is proposed?
   ❑ Individual well ❑ Shared well ❑ Community water system
2. What is the proposed use of the water?
   ❑ Residential ❑ Agricultural - Explain N/A
   ❑ Commercial/Office - Explain _____
   ❑ Industrial – Explain _____
3. What is the expected daily water demand associated with the project? N/A
4. How many service connections will be required? N/A
5. Do operable water facilities exist on the site?
   ❑ Yes ❑ No If yes, please describe: N/A
6. Has there been a sustained yield test on proposed or existing wells?
   ❑ Yes ❑ No If yes, please attach.
7. Does water meet the Health Agency's quality requirements?
   Bacteriological? ❑ Yes ❑ No
   Chemical? ❑ Yes ❑ No
   Physical ❑ Yes ❑ No
   Water analysis report submitted? ❑ Yes ❑ No
8. Please check if any of the following have been completed on the subject property and/or submitted to County Environmental Health.
   ❑ Well Driller's Letter ❑ Water Quality Analysis ❑ OK or ❑ Problems
   ❑ Will Serve Letter ❑ Pump Test N/A Hours N/A G.P.M.
   ❑ Surrounding Well Logs ❑ Hydrologic Study ❑ Other N/A

Please attach any letters or documents to verify that water is available for the proposed project.

Sewage Disposal Information

If an on-site (individual) subsurface sewage disposal system will be used:

1. Has an engineered percolation test been accomplished?
   ❑ Yes ❑ No If yes, please attach a copy.
2. What is the distance from proposed leach field to any neighboring water wells? N/A feet
3. Will subsurface drainage result in the possibility of effluent reappearing in surface water or on adjacent lands, due to steep slopes, impervious soil layers or other existing conditions?
   ❑ Yes ❑ No
4. Has a piezometer test been completed?
   ❑ Yes ❑ No
5. Will a Waste Discharge Permit from the Regional Water Quality Control Board be required?
   ❑ Yes ❑ No *(a waste discharge permit is typically needed when you exceed 2,500 gallons per day)*

If a community sewage disposal system is to be used:

1. Is this project to be connected to an existing sewer line? ❑ Yes ❑ No
   Distance to nearest sewer line: N/A Location of connection: N/A
2. What is the amount of proposed flow? N/A G.P.D.
3. Does the existing collection treatment and disposal system have adequate additional capacity to accept the proposed flow? ❑ Yes ❑ No

Solid Waste Information

1. What type of solid waste will be generated by the project?
   ☐ Domestic ☐ Industrial ☐ Agricultural ☑ Other, please explain? Construction waste
2. Name of Solid Waste Disposal Company: Waste will be transferred to Chicago Grade or Paso Robles Landfill by contractor
3. Where is the waste disposal storage in relation to buildings? Adjacent, during construction
4. Does your project design include an area for collecting recyclable materials and/or composting materials? ☐ Yes ☑ No

Community Service Information

1. Name of School District: Paso Robles Joint Unified School District
2. Location of nearest police station: City of Paso Robles Police Department, 900 Park Street, Paso Robles
3. Location of nearest fire station: Paso Robles Fire Department, 900 Park Street
4. Location of nearest public transit stop: N/A
5. Are services (grocery/other shopping) within walking distance of the project? ☐ Yes ☐ No
   If yes, what is the distance? N/A feet/miles

Historic and Archeological Information

1. Please describe the historic use of the property:
   Telcommunications facilities, residential uses, agricultural uses
2. Are you aware of the presence of any historic, cultural or archaeological materials on the project site or in the vicinity? ☐ Yes ☑ No
   If yes, please describe:
3. Has an archaeological surface survey been done for the project site? ☐ Yes ☑ No
   If yes, please include two copies of the report with the application.

Commercial/Industrial Project Information

Only complete this section if you are proposing a commercial or industrial project or zoning change.

1. Days of Operation: 24/7 (unmanned) Hours of Operation: 24/7 (unmanned)
2. How many people will this project employ? Occasionally 1-3 maintenance personnel; otherwise unmanned.
3. Will employees work in shifts? ☐ Yes ☐ No
   If yes, please identify the shift times and number of employees for each shift N/A
4. Will this project produce any emissions (i.e., gasses, smoke, dust, odors, fumes, vapors)?
   ☐ Yes ☑ No If yes, please explain:
5. Will this project increase the noise level in the immediate vicinity? ☐ Yes ☑ No
   If yes, please explain:
   (If loud equipment is proposed, please submit manufacturers estimate on noise output.)
6. What type of industrial waste materials will result from the project? Explain in detail: Potentially construction waste/debris.
7. Will hazardous products be used or stored on-site? ☐ Yes ☑ No
   If yes, please describe in detail:
8. Has a traffic study been prepared? ☐ Yes ☑ No If yes, please attach a copy.

9. Please estimate the number of employees, customers and other project-related traffic trips to or from the project: Between 7:00 - 9:00 a.m. N/A Between 4:00 to 6:00 p.m. N/A
10. Are you proposing any special measures (carpooling, public transit, telecommuting) to reduce automobile trips by employees ☐ Yes ☐ No
    If yes, please specify what you are proposing: N/A
11. Are you aware of any potentially problematic roadway conditions that may exist or result from the proposed project, such as poor sight distance at access points, connecting with the public road?
    ☐ Yes ☐ No If yes, please describe: N/A

Agricultural Information

Only complete this section if your site is: 1) Within the Agricultural land use category, or 2) currently in agricultural production.

1. Is the site currently in Agricultural Preserve (Williamson Act)? ☐ Yes ☐ No
2. If yes, is the site currently under land conservation contract? ☐ Yes ☑ No
3. If your land is currently vacant or in agricultural production, are there any restrictions on the crop productivity of the land? That is, are there any reasons (i.e., poor soil, steep slopes) the land cannot support a profitable agricultural crop? Please explain in detail: No agricultural uses within the telecommunications area or immediate vicinity.

Special Project Information

1. Describe any amenities included in the project, such as park areas, open spaces, common recreation facilities, etc.(these also need to be shown on your site plan): N/A
2. Will the development occur in phases? ☐ Yes ☑ No
   If yes describe:
3. Do you have any plans for future additions, expansion or further activity related to or connected with this proposal? ☐ Yes ☑ No If yes, explain:
4. Are there any proposed or existing deed restrictions? ☐ Yes ☑ No
   If yes, please describe:

Energy Conservation Information

1. Describe any special energy conservation measures or building materials that will be incorporated into your project *: N/A

   *The county's Building Energy Efficient Structures (BEES) program can reduce your construction permit fees. Your building must exceed the California State Energy Standards (Title 24) in order to qualify for this program. If you are interested in more information, please contact the Building Services Division of the Department of Planning and Building at (805) 781-5600.

Environmental Information

1. List any mitigation measures that you propose to lessen the impacts associated with your project:
   Visual mitigation, protection of surrounding oak woodland, implementation of best management practices to avoid erosion and down-gradient sedimentation, avoidance of nesting birds in the vicinity, proper storage, transfer, testing for hazardous materials (existing structure), and legal disposal of construction waste.

2. Are you aware of any unique, rare or endangered species (vegetation or wildlife) associated with the project site? ☐ Yes ☑ No
   If yes, please list: _____
3. Are you aware of any previous environmental determinations for all or portions of this property?
   ☑ Yes ☐ No
   If yes, please describe and provide "ED" number(s): Categorical Exemptions for telecommunications facilities

Other Related Permits

1. List all permits, licenses or government approvals that will be required for your project (federal, state and local): Federal Communications Commission mandate compliance

   (If you are unsure if additional permits are required from other agencies, please ask a member of the Planning Department staff currently assigned in either Current Planning or the Environmental Division.)

PACIFIC GAS AND ELECTRIC CO.
PLANS FOR THE CONSTRUCTION OF
COMMUNICATIONS TOWER IMPROVEMENTS

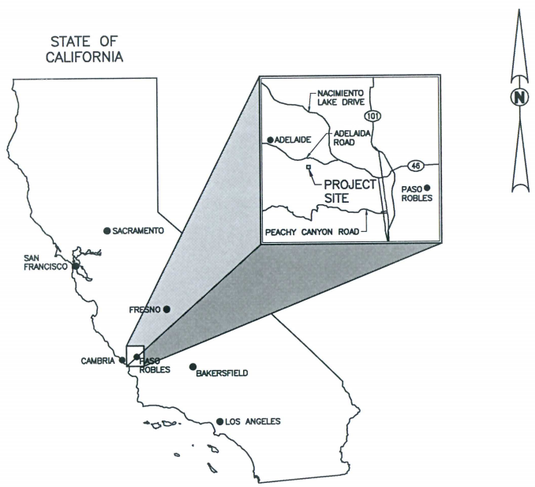

LOCATION MAP
NOT TO SCALE

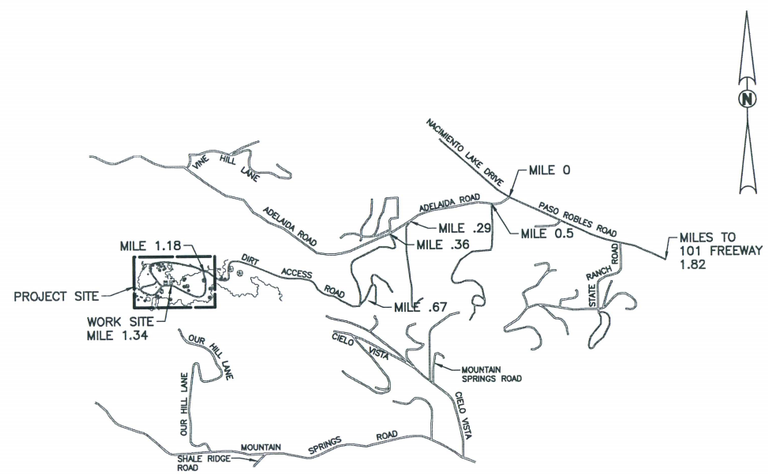

VICINITY MAP
NOT TO SCALE

PROJECT DESCRIPTION

PG&E PLANS TO ERECT A 100' TALL STEEL COMMUNICATIONS TOWER ON AN EXISTING SITE. THE SITE CONSISTS OF AN EXISTING CMU BUILDING (OVERALL DIMENSIONS 16'-0"L X 10'-8"W) AND 6' CHAINLINK FENCE (OVERALL DIMENSIONS 50'-0"W X 50'-0"L).

BUILDING INFORMATION

BUILDING DETAILS: MASONRY BLOCK / CONCRETE ROOF
BUILDING USE: GROUP U
BUILDING TYPE: TYPE IIA

OWNER'S INFORMATION

W.P. AND J.C. PORTNOFF REVOCABLE TRUST
C/O SUZANNE VALOFF
179 NIBLICK ROAD #173
PASO ROBLES, CA 93446

PARCEL DESCRIPTION

THAT PORTION OF GOVERNMENT LOT 4 IN SECTION 10, TOWNSHIP 26 SOUTH, RANGE 12 EAST, AND OF THE SOUTHEAST QUARTER OF SECTION 24, IN TOWNSHIP 26 SOUTH, RANGE 11 EAST, MOUNT DIABLO BASE AND MERIDIAN, IN THE COUNTY OF SAN LUIS OBISPO, STATE OF CALIFORNIA, ACCORDING TO THE OFFICIAL PLAT OF THE SURVEY OF SAID LANDS, APPROVED BY THE SURVEYOR GENERAL, DESCRIBED AS FOLLOWS:

BEGINNING AT THE SOUTHEAST CORNER OF SAID LOT 4; THENCE NORTH ALONG THE EAST LINE OF SAID LOT, 1256 FEET, MORE OR LESS, TO A POINT IN THE CENTER LINE OF THE COUNTY ROAD BETWEEN PASO ROBLES AND ADELAIDE; THENCE FOLLOWING ALONG THE CENTER LINE OF SAID COUNTY ROAD THE FOLLOWING COURSES AND DISTANCES, SOUTH 59°21' WEST, 256.7 FEET; SOUTH 64°56' WEST, 428.3 FEET; SOUTH 84°34' WEST, 591.3 FEET; AND NORTH 64°10' WEST, 89.0 FEET TO A POINT ON THE SECTION LINE BETWEEN SECTION 19, TOWNSHIP 26 SOUTH, RANGE 12 EAST, AND SECTION 24, TOWNSHIP 26 SOUTH, RANGE 11 EAST; THENCE NORTHWESTERLY CONTINUING ALONG THE CENTER LINE OF SAID COUNTY ROAD BETWEEN PASO ROBLES AND ADELAIDE, AS THE SAME EXISTED FEBRUARY 1, 1946, TO THE POINT OF INTERSECTION OF SAID CENTER LINE WITH THE WEST LINE OF THE SOUTHEAST QUARTER OF SAID SECTION 24, TOWNSHIP 26 SOUTH, RANGE 11 EAST; THENCE SOUTH ALONG THE SAID WEST LINE OF SAID SOUTHEAST QUARTER TO THE SOUTHWEST CORNER THEREOF; THENCE EAST ALONG THE SOUTH LINE OF SAID SOUTHEAST QUARTER AND THE SOUTH LINE OF SAID LOT 4, 3960 FEET, MORE OR LESS, TO THE POINT OF BEGINNING.

INSPECTION

NOTIFY SUPERVISING INSPECTOR FOR SAN LUIS OBISPO COUNTY, BOB RUDIO, A MINIMUM OF 48 HOURS PRIOR TO START OF INSTALLATION.

LIST OF CONSULTANTS

CIVIL:

DAVID A. MOWRY
BLAIR CHURCH & FLYNN
451 CLOVIS AVE. STE 200
CLOVIS, CA 93612
(559) 326-1400

EFREN BANUELOS
BLAIR CHURCH & FLYNN
451 CLOVIS AVE. STE 200
CLOVIS, CA 93612
(559) 326-1400

APPLICABLE CODES

2008 CALIFORNIA ENERGY CODE
2010 CALIFORNIA BUILDING CODE, VOLUMES 1 & 2 (2009 IBC)
2010 CALIFORNIA ELECTRICAL CODE (2008 NEC)
2010 CALIFORNIA FIRE CODE (2009 IFC)
2010 CALIFORNIA GREEN BUILDING CODE (NEW)
2010 CALIFORNIA MECHANICAL CODE (2009 UMC)
2010 CALIFORNIA PLUMBING CODE (2009 UPC)
2010 CALIFORNIA REFERENCE STANDARDS CODE
2010 CALIFORNIA RESIDENTIAL CODE (NEW)(2009 IRC)
COUNTY BUILDING AND CONSTRUCTION ORDINANCE – TITLE 19
COUNTY COASTAL ZONE LAND USE ORDINANCE – TITLE 23
COUNTY FIRE CODE ORDINANCE – TITLE 16
COUNTY LAND USE ORDINANCE – TITLE 22

SHEET INDEX

TITLE	SHEET NO.
COVER SHEET	1
OVERALL SITE PLAN	2
DETAILED SITE PLAN	3
TOWER DETAILS	4
TOWER DETAILS	5
TOWER DETAILS	6
NOTES	7

811 Know what's below. Call before you dig.

PRELIMINARY
NOT FOR CONSTRUCTION

Blair, Church & Flynn
CONSULTING ENGINEERS
451 Clovis Avenue, Suite 200
Clovis, California 93612
Tel (559) 326-1400
Fax (559) 326-1500

REGISTERED PROFESSIONAL ENGINEER
EFREN BANUELOS
No. 68,505
CIVIL
STATE OF CALIFORNIA

REV	DATE	DESCRIPTION	JOB NO	DSG/DWN	CHKD	SUPV	APVD	REV	DATE	DESCRIPTION	JOB NO	DSG/DWN	CHKD	SUPV	APVD

REVISION 1
DSG EB
DWN DH
CHKD DAM
SUPV
APVD
APVD
DATE 4-25-14

COMMUNICATIONS TOWER
INSTALLATION
PORTNOFF PEAK
COVER SHEET
PACIFIC GAS AND ELECTRIC COMPANY
SAN FRANCISCO, CALIFORNIA

MICROFILM	
BILL OF MATL	
DWG LIST	
SUPSDS	
SUPSD BY	
SHEET NO 1 OF 7 SHEETS	
	REV

DRAWING NUMBER

Drawing: P:\214-0145\Site Production\Drawings\214145cv01.dwg 1 COVER SHEET - MOF.dwg
Plot by: dmcmowry for ALL 2011 - 24.0pm

Loaded Vrets

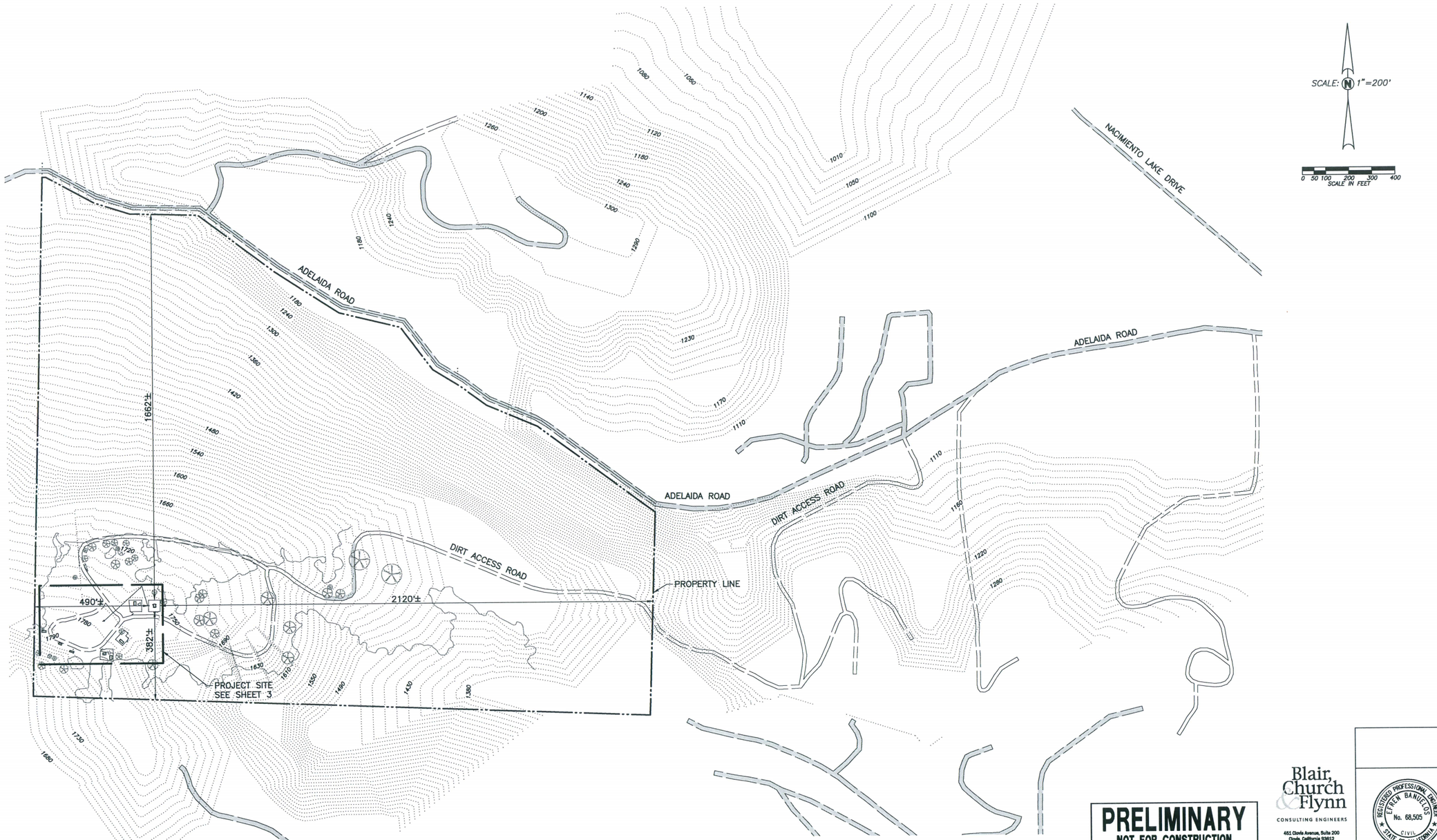

PRELIMINARY
NOT FOR CONSTRUCTION

Blair, Church & Flynn
CONSULTING ENGINEERS
451 Clovis Avenue, Suite 200
Clovis, California 93612
Tel (559) 326-1400
Fax (559) 326-1500

REGISTERED PROFESSIONAL ENGINEER
EFREN BANUELOS
No. 68,505
CIVIL
STATE OF CALIFORNIA

811
Know what's below.
Call before you dig.

REV	DATE	DESCRIPTION	JOB NO	DSG/DWN	CHKD	SUPV	APVD	REV	DATE	DESCRIPTION	JOB NO	DSG/DWN	CHKD	SUPV	APVD

REVISION 1
DSG EB
DWN DH
CHKD DAM
SUPV
APVD
APVD
DATE 4-25-14

COMMUNICATIONS TOWER
INSTALLATION
PORTNOFF PEAK
OVERALL SITE PLAN
PACIFIC GAS AND ELECTRIC COMPANY
SAN FRANCISCO, CALIFORNIA

MICROFILM
BILL OF MATL
DWG LIST
SUPSDS
SUPSD BY
SHEET NO 2 OF 7 SHEETS
REV

DRAWING NUMBER

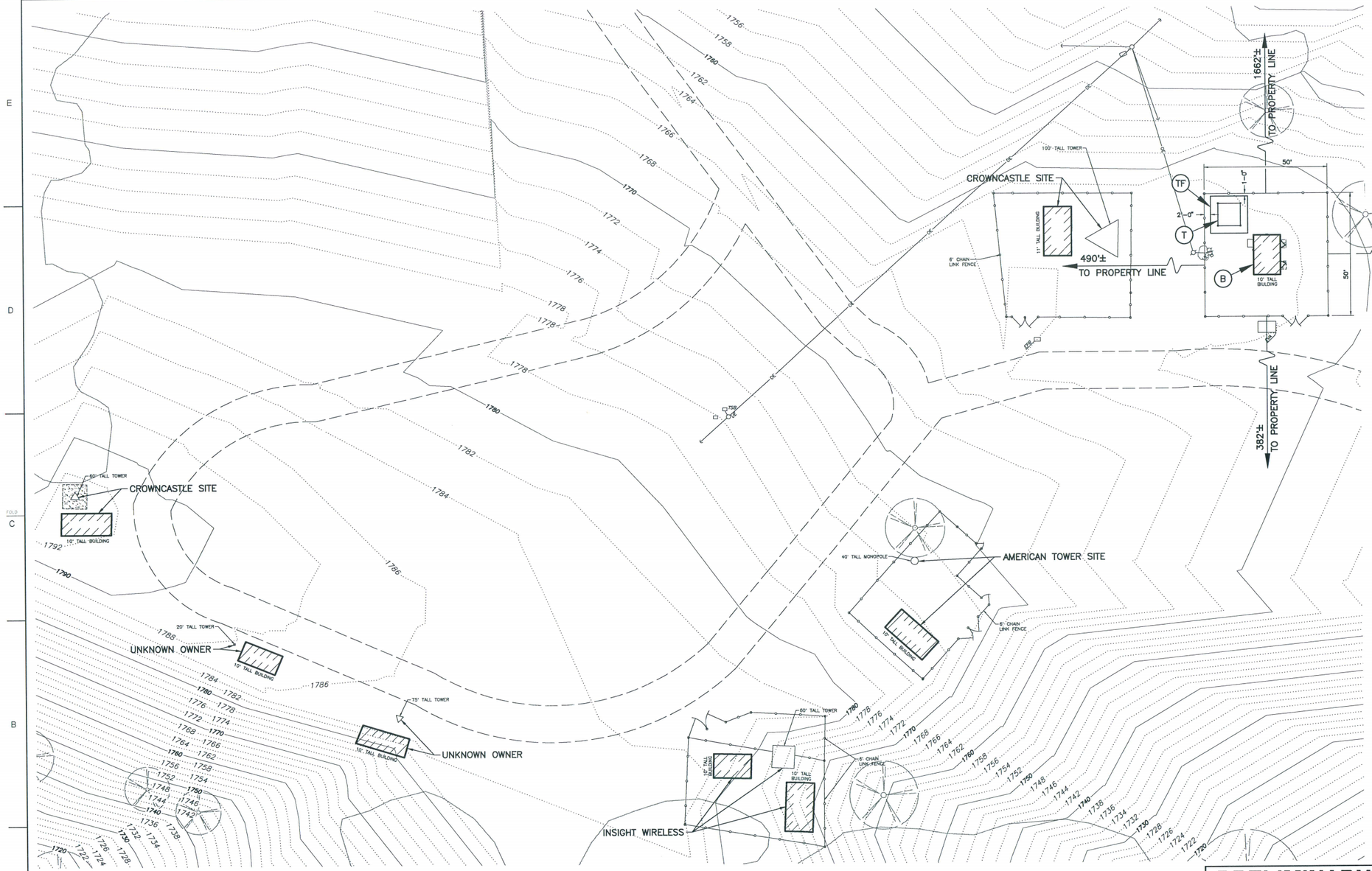

CONSTRUCTION LEGEND

- (B) EXISTING (16'-0" x 10'-8") CMU BUILDING
- (T) CONSTRUCT 100' TALL STEEL COMMUNICATIONS TOWER, SEE SHEET 4, 5, AND 6. FINISH COLOR TO BE APPROVED BY PG&E
- (TF) CONSTRUCT CONCRETE TOWER FOUNDATION, SEE SHEET 4.

TOPOGRAPHIC LEGEND:

- EVA — ELECTRIC VAULT
- UE — UNDERGROUND ELECTRIC
- ELECTRICAL CONDUIT
- ELECTRICAL PULLBOX
- POWER POLE
- TREE; SPREAD SHOWN GRAPHICALLY AND TRUNK DIAMETER AS SHOWN
- TSB — TELEPHONE SPLICE BOX
- UTILITY POLE
- E — UNDERGROUND ELECTRIC
- OE — OVERHEAD ELECTRIC
- CHAIN LINK FENCE
- DIRT
- BUILDING
- CONCRETE IMPROVEMENTS

PRELIMINARY
NOT FOR CONSTRUCTION

Blair, Church & Flynn
CONSULTING ENGINEERS
461 Clovis Avenue, Suite 200
Clovis, California 93612
Tel (559) 326-1400
Fax (559) 326-1500

REGISTERED PROFESSIONAL ENGINEER
EFREM BANUELOS
No. 68,505
CIVIL
STATE OF CALIFORNIA

Know what's below. Call before you dig.

REV	DATE	DESCRIPTION	JOB NO	DSG/DWN	CHKD	SUPV	APVD	REV	DATE	DESCRIPTION	JOB NO	DSG/DWN	CHKD	SUPV	APVD

REVISION 1
DSG EB
DWN DH
CHKD DAM
SUPV
APVD
APVD
DATE 4-25-14

COMMUNICATIONS TOWER
INSTALLATION
PORTNOFF PEAK
DETAILED SITE PLAN
PACIFIC GAS AND ELECTRIC COMPANY
SAN FRANCISCO, CALIFORNIA

MICROFILM	
BILL OF MATL	
DWG LIST	
SUPSDS	
SUPSD BY	
SHEET NO 3 OF 7 SHEETS	
	REV

DRAWING NUMBER

Looked Vrets

Drawing: A:\214-01585 Site Plan\Construction\sheet 3 214-01585.dwg; 3 Detailed Site Plan — BCF.dwg
Plot By: efrembanuelos, Apr 25, 2014 - 10:52am

NOTES:
UNLESS OTHERWISE SPECIFIED

1. THE GENERAL CONTRACTOR MUST VERIFY ALL DIMENSIONS, CONDITIONS AND ELEVATIONS BEFORE STARTING WORK. ALL DISCREPANCIES SHALL BE CALLED TO THE ATTENTION OF THE ENGINEER AND SHALL BE RESOLVED BEFORE PROCEEDING WITH THE WORK. ALL WORK SHALL BE PERFORMED IN A WORKMANLIKE MANNER IN ACCORDANCE WITH ACCEPTED CONSTRUCTION PRACTICES.
2. NOTES AND DETAILS ON THESE DRAWINGS SHALL TAKE PRECEDENCE OVER THESE GENERAL NOTES.
3. THE DETAILS ON THESE DRAWINGS SHALL APPLY IN ALL CASES UNLESS SPECIFICALLY SHOWN OTHERWISE. WHERE NO DETAIL IS SHOWN, CONSTRUCTION SHALL BE AS SHOWN FOR SIMILAR WORK.
4. IT IS THE INTENTION OF THESE DRAWINGS TO SHOW THE COMPLETED INSTALLATION. THE CONTRACTOR SHALL BE RESPONSIBLE FOR ALL TEMPORARY BRACING, SHORING, TIES, FORMWORK, ETC. IN ACCORDANCE WITH ALL NATIONAL, STATE, AND LOCAL ORDINANCES, TO SAFELY EXECUTE ALL WORK AND SHALL BE RESPONSIBLE FOR SAME. ALL WORK SHALL BE IN ACCORDANCE WITH LOCAL CODES.
5. THE CONTRACTOR SHALL USE ADEQUATE NUMBERS OF SKILLED WORKMEN WHO ARE THOROUGHLY TRAINED AND EXPERIENCED IN THE NECESSARY CRAFTS, AND WHO ARE COMPLETELY FAMILIAR WITH THE SPECIFIED REQUIREMENTS AND METHODS NEEDED FOR PROPER PERFORMANCE OF THE WORK.
6. CONSTRUCTION CONTRACTOR AGREES THAT IN ACCORDANCE WITH GENERALLY ACCEPTED CONSTRUCTION PRACTICES, CONSTRUCTION CONTRACTOR WILL BE REQUIRED TO ASSUME SOLE AND COMPLETE RESPONSIBILITY FOR JOB SITE CONDITIONS DURING THE COURSE OF CONSTRUCTION OF THE PROJECT, INCLUDING SAFETY OF ALL PERSONS AND PROPERTY, THAT THIS REQUIREMENT SHALL BE MADE TO APPLY CONTINUOUSLY AND NOT BE LIMITED TO NORMAL WORKING HOURS, AND CONSTRUCTION CONTRACTOR FURTHER AGREES TO INDEMNIFY AND HOLD DESIGN PROFESSIONAL HARMLESS FROM ANY AND ALL LIABILITY, REAL OR ALLEGED, IN CONNECTION WITH THE PERFORMANCE OF WORK ON THIS PROJECT.
7. THE TOWER DESIGN DOES NOT INCLUDE STRESSES DUE TO ERECTION AND/OR TRANSPORTATION SINCE ERECTION EQUIPMENT AND METHODS ARE UNKNOWN.
8. TOWER GROUNDING SHALL COMPLY WITH ALL LOCAL AND NATIONAL CODES. GROUNDING TO BE DONE BEFORE ERRECTION.
9. THE TOWER IS DESIGNED TO SUPPORT ONLY THE ANTENNAS AS SHOWN ON THE DRAWINGS. THE ENGINEER WILL NOT BE RESPONSIBLE FOR OVERSTRESS CONDITIONS WHICH MAY OCCUR DUE TO DEVIATIONS IN ANTENNA SIZES AND/OR LOCATIONS FROM THOSE SHOWN ON THE DRAWINGS.
10. ALL WORK SHALL COMPLY WITH OSHA SAFETY REQUIREMENTS. PROCEDURES FOR THE PROTECTION OF EXCAVATIONS, EXISTING CONSTRUCTION AND UTILITIES SHALL BE ESTABLISHED PRIOR TO FOUNDATION INSTALLATION.
11. ALL FACE WIDTHS ARE FROM CENTER LINE OF PIPE.
12. STEEL HSS CONFORMS TO ASTM A500. PLATES, BAR, AND ANGLE CONFORMS TO ASTM A36. STRUCTURAL TUBING CONFORMS TO ASTM A-513 C1020 DOM TYPE 5. ALL WELDING CONFORMS TO A.W.S. D1.1 LATEST REVISION. ALL GALVANIZING CONFORMS TO ASTM A-123 AND A-153 FOR HARDWARE.
13. THIS PROJECT CONSIST OF INSTALLING 100' SELF SUPPORT TOWER COMPLETE WITH PAD FOUNDATION.

MATERIAL SPECIFICATION:

Steel HSS Tube Seamless and Welded ASTM A500 Grade B (2" OD. and Larger) FY = 42 KSI

Structural Steel ASTM A-36 (Plates, Bars, Angles, and Channels)

Welding E70 Electrode AWS D1.1 Rev. Latest

Hot Dip Galvanize All Metal ASTM A123

Hardware ASTM A153

Bolts: Tower and Accessories ASTM A 325 GALVANIZED

Reinforced Concrete 2500 PSI Strength at 28 days

Reinforcing Steel ASTM A615-76A

Grade 60 #6 and Larger.

BECKMAN TOWER SERVICE
TKD-100'-403SW
100' SELF SUPPORT TOWER

TOWER DESIGN LOADING
WIND LOAD: 2013 CBC 1609A.1.1, ASCE7-10 ULTIMATE WIND SPEED 110 MPH TIA/EIA-222 REV G 85 MPH W/ 3 SECOND GUST, EXPOSURE C, NO ICE

ADDRESS: PORTNOFF PEAK, 1945 ADELAIDA ROAD, PASO ROBLES, CA

OWNER: PG&E

CONTRACTOR: BECKMAN TOWER SERVICE, 4861 N. GRANTLAND AVE., FRESNO, CA 93722

INSPECTOR: SALEM ENGINEERING GROUP, INC., 4729 W. JACQUELYN AVE., FRESNO, CA 9 3722

INDEX	
SHEET NO.	DESCRIPTION
SHEET S-1	INDEX AND GENERAL NOTES
SHEET S-2	TKD-100'-403SW TOWER ELEVATION
SHEET S-3	TKD-100'-403SW TOWER PAD FOUNDATION
SHEET S-4	TKD-403SW-4XL 20' SECTION ASSEMBLY
SHEET S-5	TKD-403SW-4XL LEG WELDMENT
SHEET S-6	TKD-403SW-3XL 20' SECTION ASSEMBLY
SHEET S-7	TKD-403SW-3XL LEG WELDMENT
SHEET S-8	TKD-403SW-3L 20' SECTION ASSEMBLY
SHEET S-9	TKD-403SW-3L LEG WELDMENT
SHEET S-10	TKD-403SW-3L TOP CAP ASSEMBLY
SHEET S-11	100' CLIMB LADDER ASSEMBLY
SHEET S-12	100' WAVEGUIDE LADDER ASSEMBLY
SHEET S-13	MAST FLANGE ASSEMBLY
SHEET S-14	DISH MOUNT ASSEMBLY
SHEET S-15	BGK-3 BASE GROUNDING ASSEMBLY

BECKMAN TOWER SERVICE, 4861 N. GRANTLAND, FRESNO, CALIF. 93723
TITLE: TKD-100'-403SW, 100' SELF SUPPORT TOWER, PG&E PORTNOFF PEAK, PASO ROBLES
DRAWN TAM 02/12/14 — SIZE D — DRAWING NO. S-1 — REV. - — SCALE NONE — SHEET 1 OF
DO NOT SCALE DRAWING

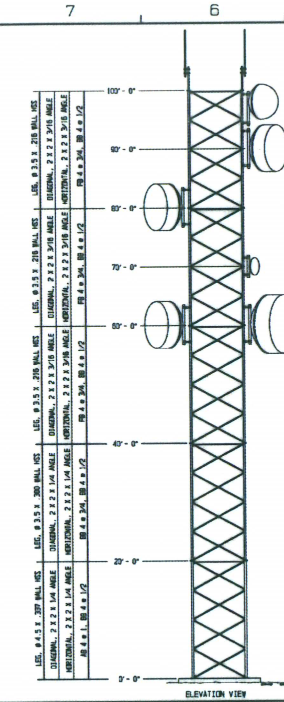

TOWER DESIGN LOADING
WIND LOAD: 2013 CBC 1609A.1.1, ASCE7-10 ULTIMATE WIND SPEED 110 MPH TIA/EIA-222 REV G 85 MPH W/ 3 SECOND GUST, EXPOSURE C, NO ICE

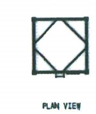

PLAN VIEW

BILL OF MATERIALS					
ITEM	QTY	UNIT	PART NO.	DESCRIPTION	DWG. NO
1	1	EA.		TKD-403-4XL 20' SECTION ASSEMBLY	-
2	1	EA.		TKD-403-3XL 20' SECTION ASSEMBLY	-
3	3	EA.		TKD-403-3L 20' SECTION ASSEMBLY	-
4	1	EA.		PAD FOUNDATION	-
5	4	EA.		TOP CAP ASSEMBLY	-
6	1	EA.		CLIMB LADDER ASSEMBLY -100'	-
7	1	EA.		SAFETY CLIMB ASSEMBLY -100'	
8	1	EA.		WAVEGUIDE LADDER ASSEMBLY -100'	-
9	2	EA.		MAST FLANGE ASSEMBLY	
10	6	EA.		DISH MOUNT ASSEMBLY	-
11	1	EA.		BGK-3 GROUNDING ASSEMBLY	-
12	-	EA.		-	-
13	-	EA.		-	-

ANTENNA INFORMATION						
ITEM (#)	ELEVATION	QUANTITY	ANT. TYPE	AZIM	PROJ'D AREA	LINE SIZE
1	100'	1 EA.	OMNI WHIP ANTENNA	N / A	4.0 SQ FT	1 ø 1 5/8"
2	100'	1 EA.	OMNI WHIP ANTENNA	N / A	4.0 SQ FT	1 ø 1 5/8"
3	100'	1 EA.	6' ANDREW #PAR6-107W DISH	N / A	28.27 SQ FT	1 ø EW52
4	90'	1 EA.	8' ANDREW #UHX8-65 DISH	N / A	50.27 SQ FT	1 ø EW52
5	80'	1 EA.	8' ANDREW #UHX8-65 DISH	N / A	50.27 SQ FT	1 ø EW52
6	70'	1 EA.	3' ANDREW #PXF-52 DISH	N / A	9.0 SQ FT	1 ø EW52
7	60'	1 EA.	10' ANDREW #P10F-9 DISH	N / A	78.54 SQ FT	1 ø EW52
8	60'	1 EA.	8' ANDREW #PAR8-65 DISH	N / A	50.27 SQ FT	1 ø EW52

*** PROPOSED ANTENNAS

LADDER INFORMATION			
ELEVATION	LOCATION	TYPE	MOUNTING
0 TO 100'	FACE	18" LADDER	-

BECKMAN TOWER SERVICE, 4861 N. GRANTLAND, FRESNO, CALIF. 93723
TITLE: TKD-100'-403SW, 100' SS TOWER ELEVATION, PG&E PORTNOFF PEAK, PASO ROBLES
DRAWN TAM 02/10/14 — SIZE D — DRAWING NO. S-2 — SCALE NONE — SHEET 2 OF
DO NOT SCALE DRAWING

GENERAL CONCRETE AND FOUNDATION NOTES:

1. THE CONCRETE SHALL CONSIST OF 6 SACKS OF CEMENT PER CUBIC YARD, 1" AGGREGATE MAXIMUM, AND 6.0 GALLONS OF WATER PER 94 LB SACK OF TYPE 2 CEMENT, FOR A MINIMUM COMPRESSIVE STRENGTH OF 2500 PSI AT 28 DAYS. THE SLUMP SHALL NOT EXCEED 4.0" PLUS OR MINUS .25 INCHES.
2. FABRICATIONS DETAILS SHALL CONFORM TO THE A.C.I. MANUALS OF STANDARD PRACTICE.
3. SPLICES IN REINFORCING STEEL SHALL BE LAPPED 40 DIAMETERS MINIMUM UNLESS OTHERWISE NOTED.
4. ALL REBAR, ANCHOR BOLTS, BEARING PLATES AND OTHER MEMBERS OF THE FOUNDATIONS SHALL BE WELL SECURED PRIOR TO POURING CONCRETE.
5. ALL CONCRETE SHALL HAVE STEEL TROWEL FINISH.
6. ANCHOR BOLTS TO BE ASTM A-449.
7. ALL REINFORCING STEEL SHALL HAVE A MINIMUM CONCRETE COVER OF 3" FOR SURFACES POURED AGAINST EARTH AND 2" OF FORMED SURFACES EXPOSED TO GROUND OR WEATHER.
8. ALL WORK SHALL CONFORM TO THE 2013 CALIFORNIA BUILDING CODE OR LASTEST VERSION.
9. THE SOIL SHALL MEET OR EXCEED THE SOILS AS DESCRIBED IN THE SOILS REPORT PREPARED BY SALEM ENGINEERING GROUP, INC. DATED, JANUARY 31, 2014. JOB NUMBER 2-214-0057.
10. NO WELDING OF REBAR IN REQUIRED WITH THE EXCEPTION OF TACKING THE REBAR CAGE. NO SPECIAL INSPECTION IS REQUIRED.
11. THE BOTTOM OF THE EXCAVATION SHALL BE CLEAR AND FREE OF LOOSE SOIL. SAFETY PRECAUTIONS SHALL BE USED TO INSURE THE EXCAVATION PRESENTS NO HAZARDS TO OTHERS IF LEFT UNATTENDED.
12. THE FOOTING SHALL PENETRATE AND BEAR UPON UNDISTURBED SOIL OR BACK FILL SOIL HAVING A MINIMUM IN PLACE DENSITY OF 95% OF THE MAXIMUM DENSITY AT OPTIMUM MOISTURE CONTENT ESTABLISHED BY ASTM-D1557-70.
13. REINFORCING STEEL SHALL MEET ASTM A615-76A GRADE GRADE 60 FOR #6 AND LARGER NO GRADE 40 ALLOWED.

41.67 CU. YARDS CONCRETE REQUIRED

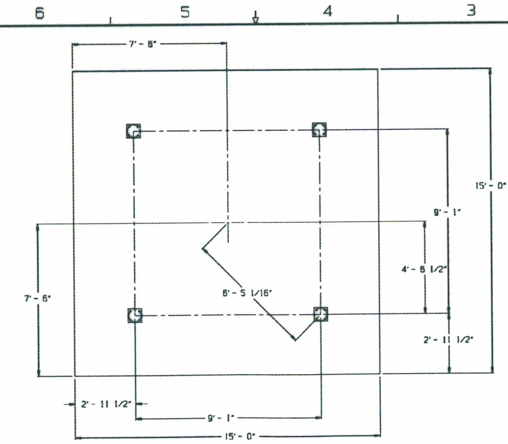

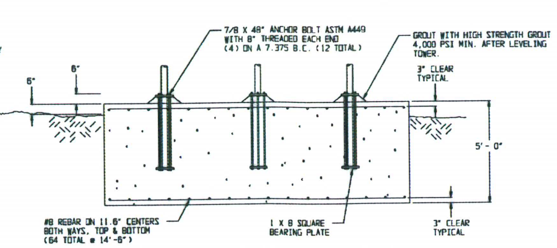

BECKMAN TOWER SERVICE, 4861 N. GRANTLAND, FRESNO, CALIF. 93723
TITLE: TKD-100'-403SW, 100' SELF SUPPORT TOWER, PG&E PORTNOFF PEAK, PASO ROBLES
DRAWN 02/12/14 — SIZE D — DRAWING NO. S-3 — SCALE NONE — SHEET 3 OF
DO NOT SCALE DRAWING

Know what's below. Call before you dig.

PRELIMINARY
NOT FOR CONSTRUCTION

Blair, Church & Flynn
CONSULTING ENGINEERS
451 Clovis Avenue, Suite 200
Clovis, California 93612
Tel (559) 326-1400
Fax (559) 326-1500

REGISTERED PROFESSIONAL ENGINEER — EFREN BANUELOS — No. 68,505 — CIVIL — STATE OF CALIFORNIA

REV	DATE	DESCRIPTION	JOB NO	DSG/DWN	CHKD	SUPV	APVD	REV	DATE	DESCRIPTION	JOB NO	DSG/DWN	CHKD	SUPV	APVD

REVISION 1
DSG EB
DWN DH
CHKD DAM
SUPV
APVD
APVD
DATE 4-25-14

COMMUNICATIONS TOWER
INSTALLATION
PORTNOFF PEAK
TOWER DETAILS
PACIFIC GAS AND ELECTRIC COMPANY
SAN FRANCISCO, CALIFORNIA

MICROFILM
BILL OF MATL
DWG LIST
SUPSDS
SUPSD BY
SHEET NO 4 OF 7 SHEETS
REV

DRAWING NUMBER

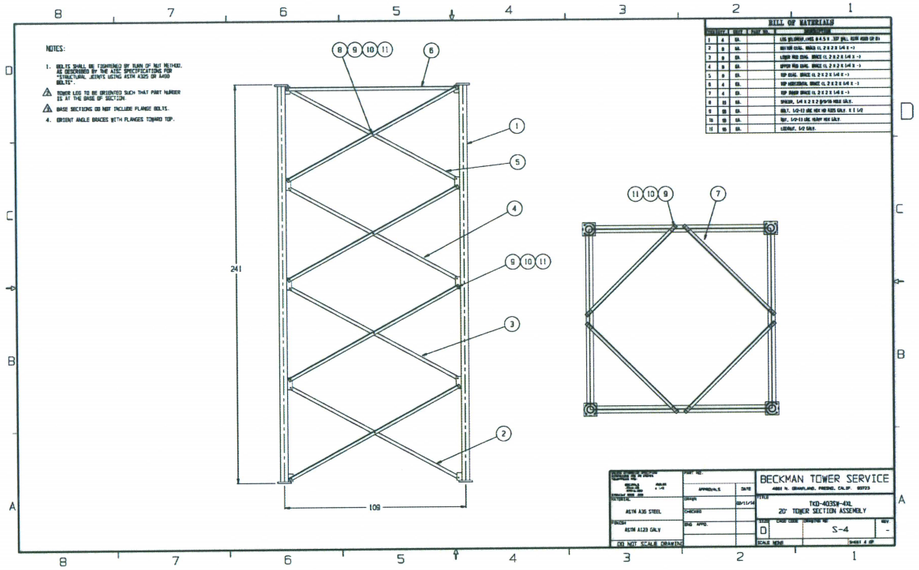

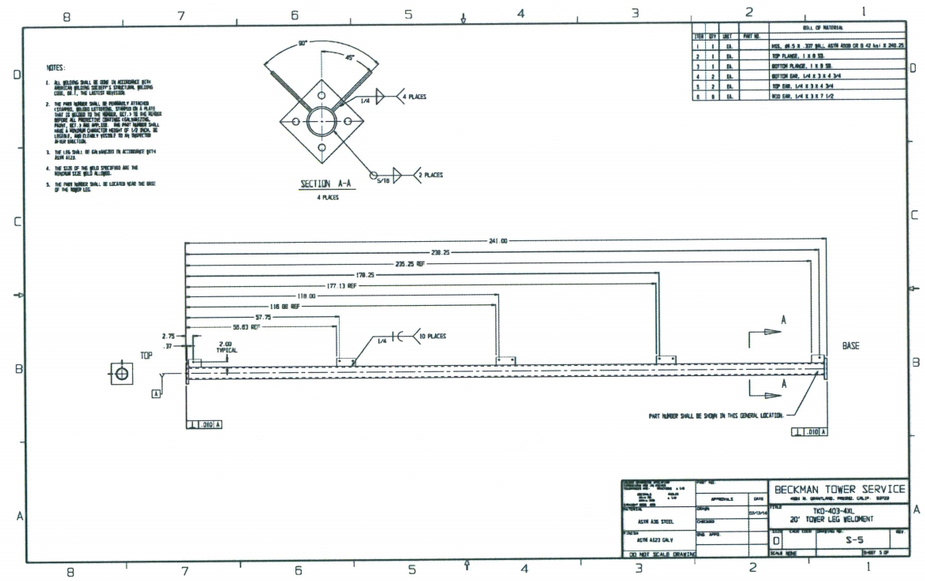

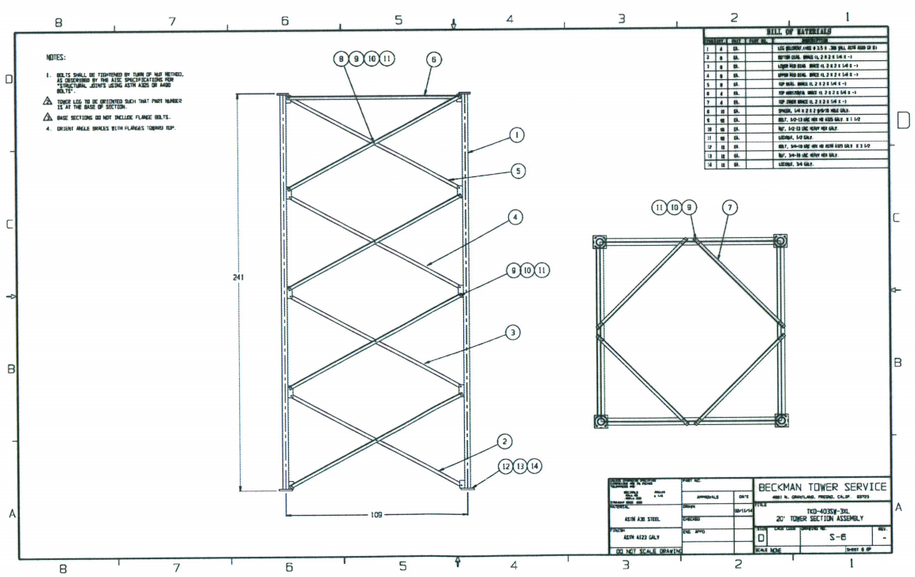

Know what's below. Call before you dig.

PRELIMINARY
NOT FOR CONSTRUCTION

Blair, Church & Flynn
CONSULTING ENGINEERS
465 Clovis Avenue, Suite 200
Clovis, California 93612
Tel (559) 326-1400
Fax (559) 326-1500

REGISTERED PROFESSIONAL ENGINEER
EFREN BANUELOS
No. 68,505
CIVIL
STATE OF CALIFORNIA

REV	DATE	DESCRIPTION	JOB NO	DSG/DWN	CHKD	SUPV	APVD	REV	DATE	DESCRIPTION	JOB NO	DSG/DWN	CHKD	SUPV	APVD

REVISION 1	
DSG	EB
DWN	DH
CHKD	DAM
SUPV	
APVD	
APVD	
DATE	4-25-14

COMMUNICATIONS TOWER
INSTALLATION
PORTNOFF PEAK
TOWER DETAILS
PACIFIC GAS AND ELECTRIC COMPANY
SAN FRANCISCO, CALIFORNIA

MICROFILM	
BILL OF MATL	
DWG LIST	
SUPSDS	
SUPSD BY	
SHEET NO 5 OF 7 SHEETS	
	REV

DRAWING NUMBER

Drawing: A1274-d1455.Dsn Production/Drawings/A1274-d1455d01.dwg; 3 Tower Details - BCF.ctb
Plot By: dianmedy Apr 25, 2014 - 2:36pm

Loaded Vrets

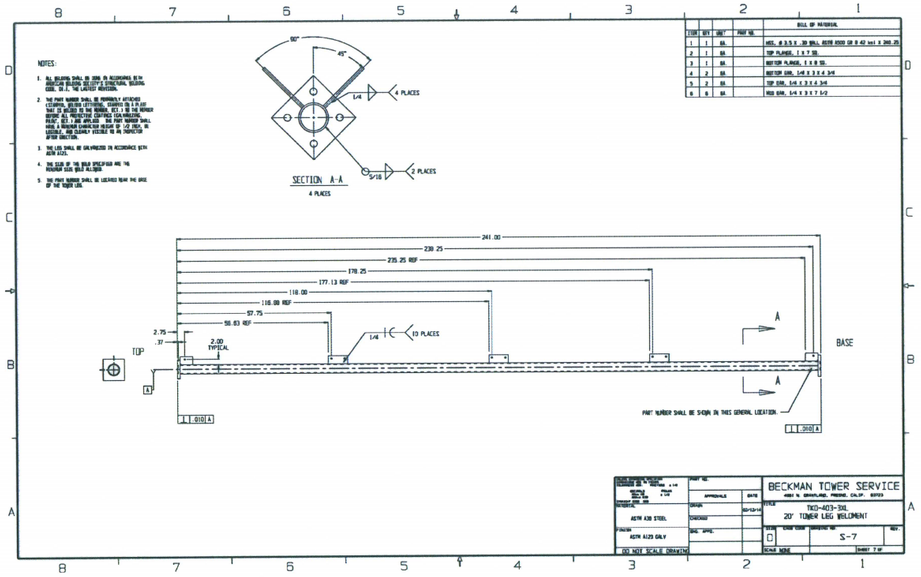

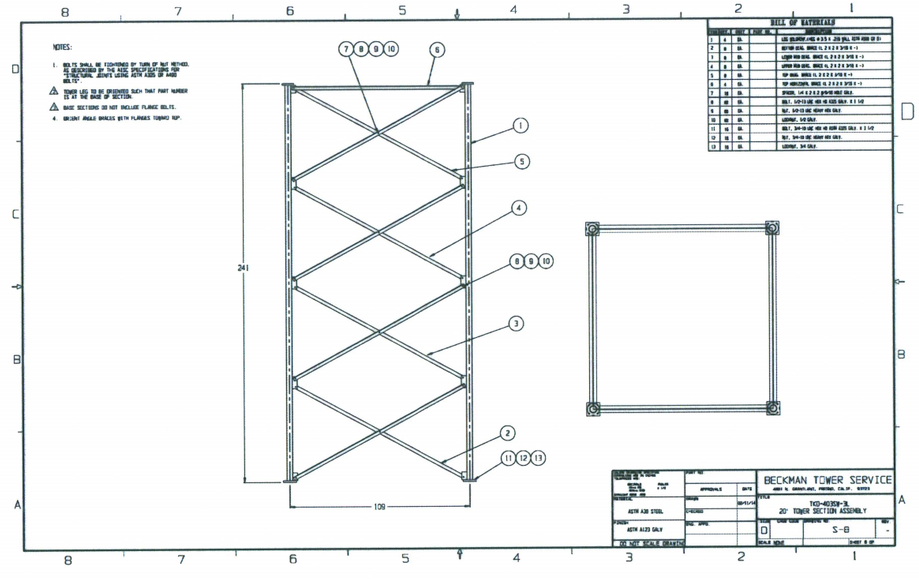

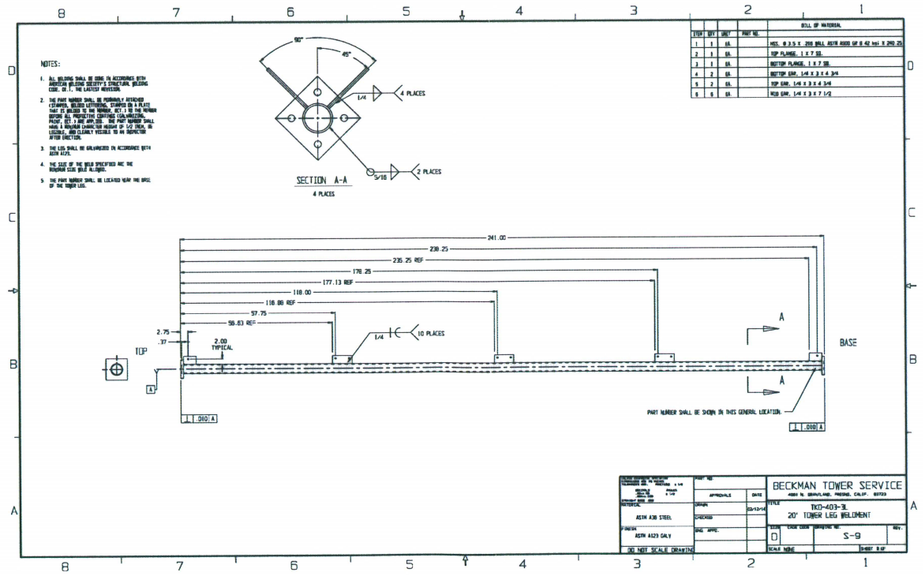

PRELIMINARY
NOT FOR CONSTRUCTION

Blair, Church & Flynn
CONSULTING ENGINEERS
461 Clovis Avenue, Suite 200
Clovis, California 93612
Tel (559) 326-5400
Fax (559) 326-5500

REGISTERED PROFESSIONAL ENGINEER
EFREM BANUELOS
No. 68,505
CIVIL
STATE OF CALIFORNIA

Know what's below. Call before you dig.

REV	DATE	DESCRIPTION	JOB NO	DSG/DWN	CHKD	SUPV	APVD	REV	DATE	DESCRIPTION	JOB NO	DSG/DWN	CHKD	SUPV	APVD

	REVISION 1
DSG	EB
DWN	DH
CHKD	DAM
SUPV	
APVD	
APVD	
DATE	4-25-14

COMMUNICATIONS TOWER
INSTALLATION
PORTNOFF PEAK
TOWER DETAILS
PACIFIC GAS AND ELECTRIC COMPANY
SAN FRANCISCO, CALIFORNIA

MICROFILM	
BILL OF MATL	
DWG LIST	
SUPSDS	
SUPSD BY	
SHEET NO 6 OF 7 SHEETS	
	REV

DRAWING NUMBER

Drawing: P1214-0145 Qbt Production\Drawings\1214145001 dwg 6 Tower Details - 001.dwg
Plot by: ebenavidez , Apr 25, 2014 - 2:42pm

Loaded Weight

REQUIREMENTS FOR SITE GEOTECHNICAL CONSTRUCTION AND TESTING

REQUIREMENTS FOR SITE GEOTECHNICAL CONSTRUCTION AND TESTING

1. UNLESS OTHERWISE STATED, THE TERMS "COMPACTED" AND "RECOMPACTED" REFER TO SOILS PLACED IN LEVEL LIFTS NOT EXCEEDING 8 INCHES IN LOOSE THICKNESS AND COMPACTED TO A MINIMUM OF 90 PERCENT OF MAXIMUM DRY DENSITY.

2. UNLESS OTHERWISE STATED, "MOISTURE CONDITIONING" REFERS TO THE MOISTENING OR DRYING OF OILS TO OPTIMUM MOISTURE CONTENT OR SLIGHTLY ABOVE, PRIOR TO APPLICATION OF COMPACTIVE EFFORT.

3. THE STANDARD TESTS USED TO DEFINE MAXIMUM DRY DENSITY AND FIELD DENSITY WILL BE ASTMD 1557-12 AND ASTM D 6938-10, RESPECTIVELY, OR OTHER METHODS ACCEPTABLE TO THE SOILS ENGINEER AND JURISDICTION.

4. THE FOLLOWING OPERATIONS ARE CONSIDERED TO BE WORK OF A MINOR NATURE AS IT RELATES TO SPECIAL INSPECTION IN SECTION 1704 OF THE CBC. THEREFORE, WITH THE APPROVAL OF THE BUILDING OFFICIAL, PERIODIC SPECIAL INSPECTION SHOULD BE PERFORMED IN LIEU OF CONTINUOUS SPECIAL INSPECTION:
   - STRIPPING AND CLEARING OF STRUCTURES AND IMPROVEMENTS
   - OVER EXCAVATION TO THE RECOMMENDED DEPTHS
   - MOISTURE CONDITIONING AND COMPACTION OF THE BEDROCK AND AB
   - FILL QUALITY, PLACEMENT, AND COMPACTION

5. A PROGRAM OF QUALITY CONTROL SHOULD BE DEVELOPED PRIOR TO BEGINNING GRADING. THE CONTRACTOR OR PROJECT MANAGER SHOULD DETERMINE ANY ADDITIONAL INSPECTION ITEMS REQUIRED BY THE ARCHITECT/ENGINEER OR THE GOVERNING JURISDICTION.

6. LOCATIONS AND FREQUENCY OF COMPACTION TESTS SHOULD BE AS PER THE RECOMMENDATION OF THE SOILS ENGINEER AT THE TIME OF CONSTRUCTION. THE RECOMMENDED TEST LOCATION AND FREQUENCY MAY BE SUBJECT TO MODIFICATION BY THE SOILS ENGINEER, BASED UPON SOIL AND MOISTURE CONDITIONS ENCOUNTERED, SIZE AND TYPE OF EQUIPMENT USED BY THE CONTRACTOR, THE GENERAL TREND OF THE RESULTS OF COMPACTION TESTS, OR OTHER FACTORS.

7. A PRECONSTRUCTION CONFERENCE AMONG THE COUNTY OF SAN LUIS OBISPO, THE OWNER, THE SOILS ENGINEER, THE SPECIAL INSPECTOR, THE ARCHITECT/ENGINEER, AND CONTRACTORS IS RECOMMENDED TO DISCUSS PLANNED CONSTRUCTION PROCEDURES AND QUALITY CONTROL REQUIREMENTS.

8. THE SOILS ENGINEER SHOULD BE NOTIFIED AT LEAST 48 HOURS PRIOR TO BEGINNING CONSTRUCTION OPERATIONS. IF EARTH SYSTEMS PACIFIC IS NOT RETAINED TO PROVIDE CONSTRUCTION OBSERVATION AND TESTING SERVICES, IT SHALL NOT BE RESPONSIBLE FOR THE INTERPRETATION OF THE INFORMATION BY OTHERS OR ANY CONSEQUENCES ARISING THEREFROM.

SCHEDULE OF SPECIAL INSPECTIONS

INSPECTION	INSPECTOR	FREQUENCY
MOISTURE CONDITIONING AND COMPACTION TESTING	DOUG BURNHAM / COUNTY INSPECTOR	AS NEEDED
SITE STRIPPING AND CLEARING	DOUG BURNHAM / COUNTY INSPECTOR	AS NEEDED
FILL QUALITY, PLACEMENT, AND COMPACTION	DOUG BURNHAM / COUNTY INSPECTOR	AS NEEDED
COMPRESSIVE STRENGTH OF CONCRETE	DOUG BURNHAM / COUNTY INSPECTOR	AS NEEDED
UTILITY BUILDING ELECTRICAL	COUNTY BUILDING INSPECTOR	ON REQUEST FROM CONTRACTOR
FUEL CELL INSTALLATION	DOUG BURNHAM / COUNTY INSPECTOR	ON REQUEST FROM CONTRACTOR
UTILITY BUILDING FIRE SUPPRESSION	CAL FIRE	ON REQUEST FROM CONTRACTOR
TORQUE ON ANTENNA MEMBERS	DOUG BURNHAM / COUNTY INSPECTOR	ON REQUEST FROM CONTRACTOR

PRELIMINARY
NOT FOR CONSTRUCTION

Blair, Church & Flynn
CONSULTING ENGINEERS
461 Clovis Avenue, Suite 200
Clovis, California 93612
Tel (559) 326-1400
Fax (559) 326-1500

REGISTERED PROFESSIONAL ENGINEER
EFREM BANUELOS
No. 68,505
CIVIL
STATE OF CALIFORNIA

811
Know what's below.
Call before you dig.

REV	DATE	DESCRIPTION	JOB NO	DSG/ DWN	CHKD	SUPV	APVD	REV	DATE	DESCRIPTION	JOB NO	DSG/ DWN	CHKD	SUPV	APVD

REVISION 1
DSG EB
DWN DH
CHKD DAM
SUPV
APVD
APVD
DATE 4-25-14

COMMUNICATIONS TOWER
INSTALLATION
PORTNOFF PEAK
NOTES
PACIFIC GAS AND ELECTRIC COMPANY
SAN FRANCISCO, CALIFORNIA

MICROFILM
BILL OF MATL
DWG LIST
SUPSDS
SUPSD BY
SHEET NO 7 OF 7 SHEETS
REV

DRAWING NUMBER

Drawing: A1214-01BS Site Development Drawings\1214-01BsDwg\1 Notes - BCF.dwg
Plot By: Banuelos, Efrem Apr 25, 2014 - 7:00am

PACIFIC GAS AND ELECTRIC CO.
PLANS FOR THE CONSTRUCTION OF
COMMUNICATIONS TOWER IMPROVEMENTS
FIRE SAFETY PLAN

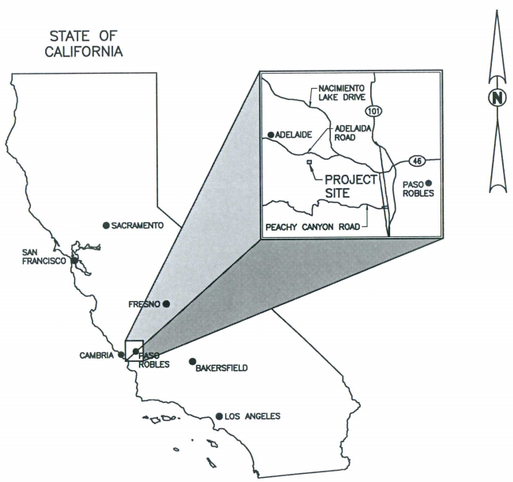

LOCATION MAP

NOT TO SCALE

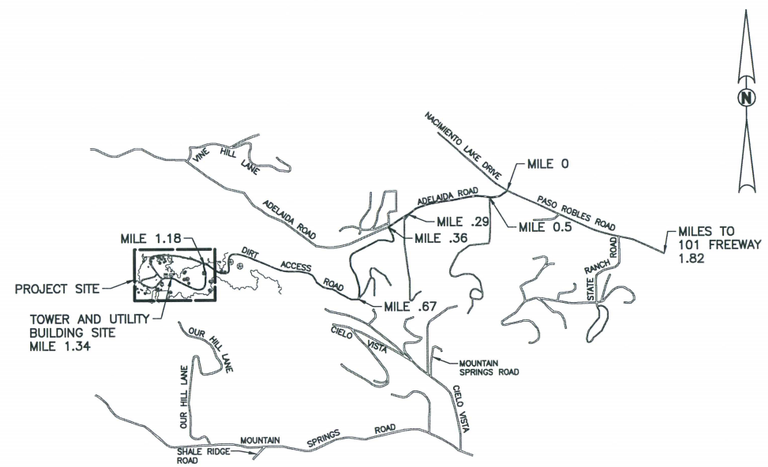

VICINITY MAP

NOT TO SCALE

SITE ADDRESS

1945 ADELAIDA RD.
PASO ROBLES, CA 93446

LATITUDE: 35°38'47.40" NORTH
LONGITUDE: 120°44'14.50" WEST

PROJECT DESCRIPTION

PG&E PLANS TO ERECT A 100' TALL STEEL COMMUNICATIONS TOWER ON AN EXISTING SITE. THE SITE CONSISTS OF AN EXISTING CMU BUILDING (OVERALL DIMENSIONS 16'-0"L X 10'-8"W) AND 6' CHAINLINK FENCE (OVERALL DIMENSIONS 50'-0"W X 50'-0"L).

BUILDING INFORMATION

BUILDING DETAILS: MASONRY BLOCK / CONCRETE ROOF
BUILDING USE: GROUP U
BUILDING TYPE: TYPE IIA

OWNER'S INFORMATION

W.P. AND J.C. PORTNOFF REVOCABLE TRUST
C/O SUZANNE VALOFF
179 NIBLICK ROAD #173
PASO ROBLES, CA 93446

PARCEL DESCRIPTION

THAT PORTION OF GOVERNMENT LOT 4 IN SECTION 10, TOWNSHIP 26 SOUTH, RANGE 12 EAST, AND OF THE SOUTHEAST QUARTER OF SECTION 24, IN TOWNSHIP 26 SOUTH, RANGE 11 EAST, MOUNT DIABLO BASE AND MERIDIAN, IN THE COUNTY OF SAN LUIS OBISPO, STATE OF CALIFORNIA, ACCORDING TO THE OFFICIAL PLAT OF THE SURVEY OF SAID LANDS, APPROVED BY THE SURVEYOR GENERAL, DESCRIBED AS FOLLOWS:

BEGINNING AT THE SOUTHEAST CORNER OF SAID LOT 4; THENCE NORTH ALONG THE EAST LINE OF SAID LOT, 1256 FEET, MORE OR LESS, TO A POINT IN THE CENTER LINE OF THE COUNTY ROAD BETWEEN PASO ROBLES AND ADELAIDE; THENCE FOLLOWING ALONG THE CENTER LINE OF SAID COUNTY ROAD THE FOLLOWING COURSES AND DISTANCES, SOUTH 56°21' WEST, 256.7 FEET; SOUTH 64°56' WEST, 428.3 FEET; SOUTH 84°34' WEST, 591.3 FEET; AND NORTH 64°10' WEST, 89.0 FEET TO A POINT ON THE SECTION LINE BETWEEN SECTION 19, TOWNSHIP 26 SOUTH, RANGE 12 EAST, AND SECTION 24, TOWNSHIP 26 SOUTH, RANGE 11 EAST; THENCE NORTHWESTERLY CONTINUING ALONG THE CENTER LINE OF SAID COUNTY ROAD BETWEEN PASO ROBLES AND ADELAIDE, AS THE SAME EXISTED FEBRUARY 1, 1946, TO THE POINT OF INTERSECTION OF SAID CENTER LINE WITH THE WEST LINE OF THE SOUTHEAST QUARTER OF SAID SECTION 24, TOWNSHIP 26 SOUTH, RANGE 11 EAST; THENCE SOUTH ALONG THE SAID WEST LINE OF SAID SOUTHEAST QUARTER TO THE SOUTHWEST CORNER THEREOF; THENCE EAST ALONG THE SOUTH LINE OF SAID SOUTHEAST QUARTER AND THE SOUTH LINE OF SAID LOT 4, 3960 FEET, MORE OR LESS, TO THE POINT OF BEGINNING.

INSPECTION

NOTIFY SUPERVISING INSPECTOR FOR SAN LUIS OBISPO COUNTY, BOB RUDIO, A MINIMUM OF 48 HOURS PRIOR TO START OF INSTALLATION.

LIST OF CONSULTANTS

CIVIL:

DAVID A. MOWRY
BLAIR CHURCH & FLYNN
451 CLOVIS AVE. STE 200
CLOVIS, CA 93612
(559) 326-1400

EFREN BANUELOS
BLAIR CHURCH & FLYNN
451 CLOVIS AVE. STE 200
CLOVIS, CA 93612
(559) 326-1400

APPLICABLE CODES

2008 CALIFORNIA ENERGY CODE
2010 CALIFORNIA BUILDING CODE, VOLUMES 1 & 2 (2009 IBC)
2010 CALIFORNIA ELECTRICAL CODE (2008 NEC)
2010 CALIFORNIA FIRE CODE (2009 IFC)
2010 CALIFORNIA GREEN BUILDING CODE (NEW)
2010 CALIFORNIA MECHANICAL CODE (2009 UMC)
2010 CALIFORNIA PLUMBING CODE (2009 UPC)
2010 CALIFORNIA REFERENCE STANDARDS CODE
2010 CALIFORNIA RESIDENTIAL CODE (NEW)(2009 IRC)
COUNTY BUILDING AND CONSTRUCTION ORDINANCE – TITLE 19
COUNTY COASTAL ZONE LAND USE ORDINANCE – TITLE 23
COUNTY FIRE CODE ORDINANCE – TITLE 16
COUNTY LAND USE ORDINANCE – TITLE 22

PRELIMINARY
NOT FOR CONSTRUCTION

Blair, Church & Flynn
CONSULTING ENGINEERS
451 Clovis Avenue, Suite 200
Clovis, California 93612
Tel (559) 326-1400
Fax (559) 326-1500

REGISTERED PROFESSIONAL ENGINEER
EFREN BANUELOS
No. 68,505
CIVIL
STATE OF CALIFORNIA

Know what's below. Call before you dig.

REV	DATE	DESCRIPTION	JOB NO	DSG/DWN	CHKD	SUPV	APVD	REV	DATE	DESCRIPTION	JOB NO	DSG/DWN	CHKD	SUPV	APVD

REVISION 1
DSG EB
DWN DH
CHKD DAM
SUPV
APVD
APVD
DATE 4-25-14

COMMUNICATIONS TOWER
INSTALLATION
PORTNOFF PEAK
FIRE SAFETY PLAN
PACIFIC GAS AND ELECTRIC COMPANY
SAN FRANCISCO, CALIFORNIA

MICROFILM
BILL OF MATL
DWG LIST
SUPSDS
SUPSD BY
SHEET NO 1 OF 4 SHEETS
REV

DRAWING NUMBER

Drawing: P:\21xx-2165\Site Production\Drawings\21-2165_fire_safety_map_1 Fire Safety Plan - 8D1.dwg
Plot By: Gonzalez, Jose Date: Jul 01, 2014 - 2:42pm

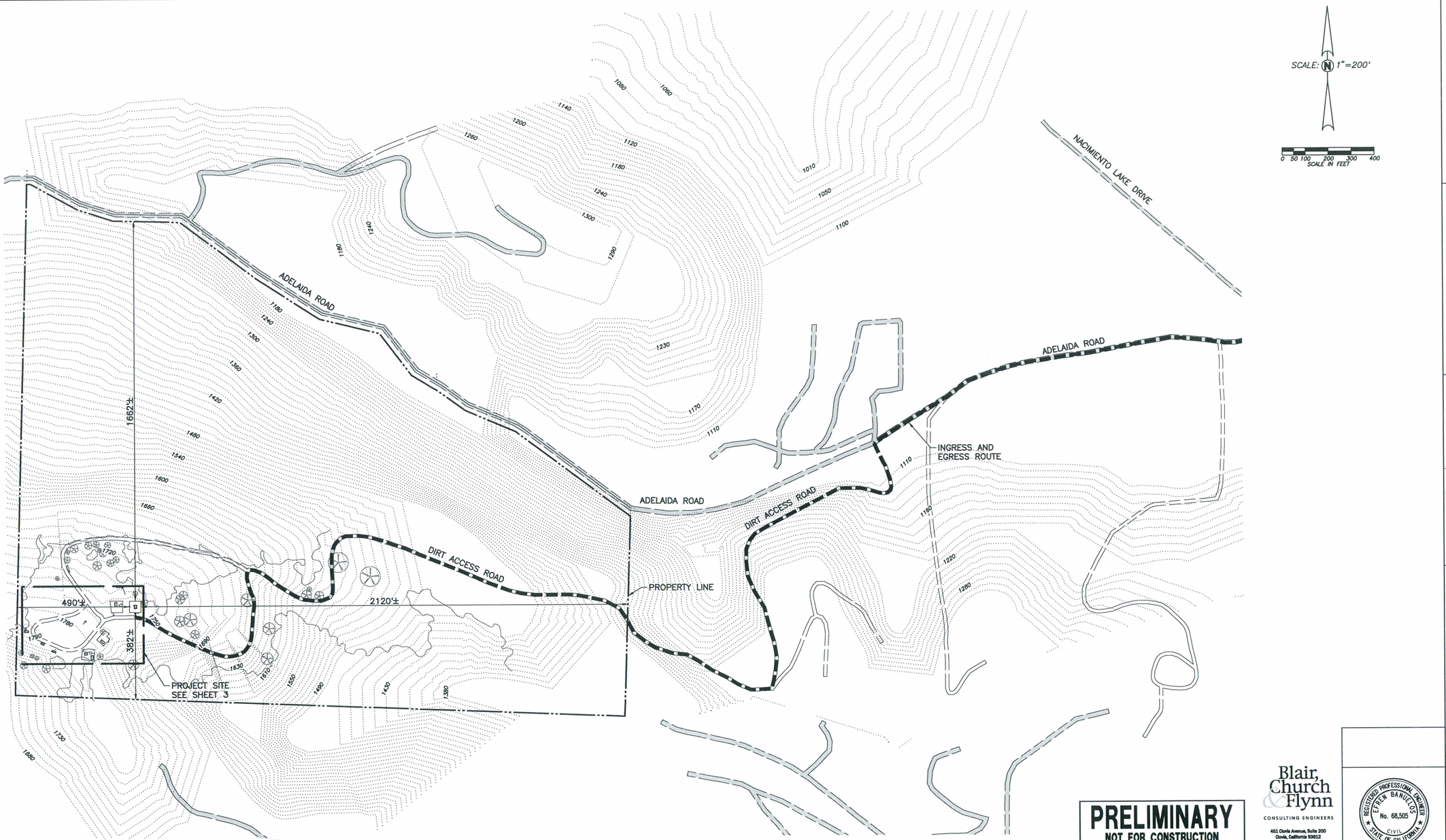

PRELIMINARY
NOT FOR CONSTRUCTION

Blair, Church & Flynn
CONSULTING ENGINEERS
451 Clovis Avenue, Suite 200
Clovis, California 93612
Tel (559) 326-1400
Fax (559) 326-1500

REGISTERED PROFESSIONAL ENGINEER
EFREN BANUELOS
No. 68,505
CIVIL
STATE OF CALIFORNIA

811
Know what's below.
Call before you dig.

REV	DATE	DESCRIPTION	JOB NO	DSG/DWN	CHKD	SUPV	APVD	REV	DATE	DESCRIPTION	JOB NO	DSG/DWN	CHKD	SUPV	APVD

REVISION 1
DSG EB
DWN DH
CHKD DAM
SUPV
APVD
APVD
DATE 4-25-14

COMMUNICATIONS TOWER
INSTALLATION
PORTNOFF PEAK
FIRE SAFETY OVERALL PLAN
PACIFIC GAS AND ELECTRIC COMPANY
SAN FRANCISCO, CALIFORNIA

MICROFILM
BILL OF MATL
DWG LIST
SUPSDS
SUPSD BY
SHEET NO 2 OF 4 SHEETS
REV

DRAWING NUMBER

Drawing: P:\214-0165\Site\ProductionDrawings\214165_fs_s01.dwg; 3 Fire Safety Detailed Plan - BCF.ctb
Plot by: dhernandez Apr 25, 2014 - 2:43pm

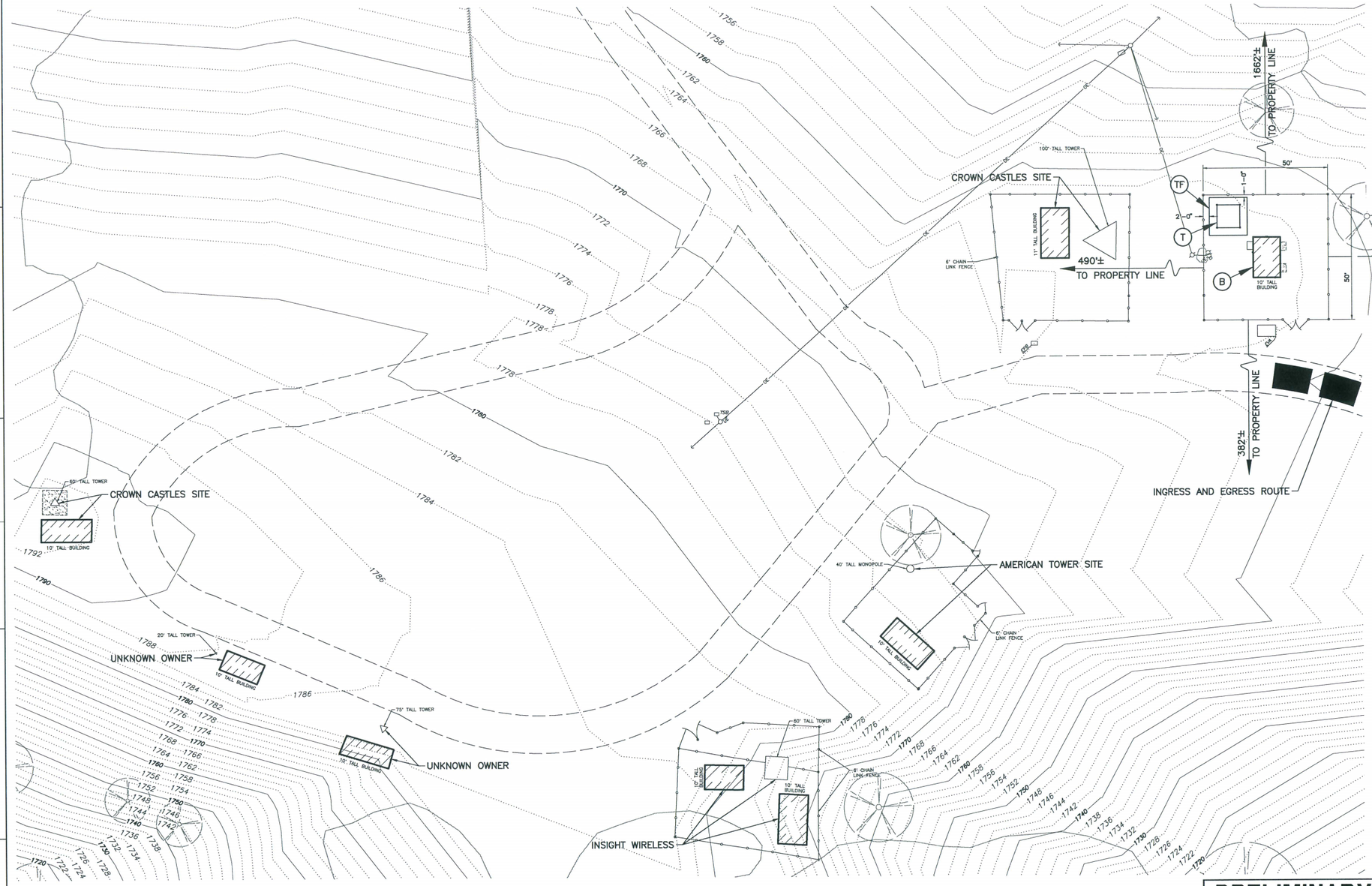

CONSTRUCTION LEGEND

- (B) EXISTING (16'–0" x 10'–8") CMU BUILDING
- (T) CONSTRUCT 100' TALL STEEL COMMUNICATIONS TOWER. FINISH COLOR TO BE APPROVED BY PG&E
- (TF) CONSTRUCT CONCRETE TOWER FOUNDATION.

TOPOGRAPHIC LEGEND:

- EVA — ELECTRIC VAULT
- UE — UNDERGROUND ELECTRIC
- ELECTRICAL CONDUIT
- ELECTRICAL PULLBOX
- POWER POLE
- TREE; SPREAD SHOWN GRAPHICALLY AND TRUNK DIAMETER AS SHOWN
- TSB — TELEPHONE SPLICE BOX
- UTILITY POLE
- E — UNDERGROUND ELECTRIC
- OE — OVERHEAD ELECTRIC
- CHAIN LINK FENCE
- DIRT
- BUILDING
- CONCRETE IMPROVEMENTS

PRELIMINARY
NOT FOR CONSTRUCTION

Blair, Church & Flynn
CONSULTING ENGINEERS
461 Clovis Avenue, Suite 200
Clovis, California 93612
Tel (559) 326-1400
Fax (559) 326-1500

REGISTERED PROFESSIONAL ENGINEER
ERICK BANUELOS
No. 68,505
CIVIL
STATE OF CALIFORNIA

Know what's below. Call before you dig.

REV	DATE	DESCRIPTION	JOB NO	DSG/DWN	CHKD	SUPV	APVD	REV	DATE	DESCRIPTION	JOB NO	DSG/DWN	CHKD	SUPV	APVD

REVISION 1
DSG EB
DWN DH
CHKD DAM
SUPV
APVD
APVD
DATE 4-25-14

COMMUNICATIONS TOWER
INSTALLATION
PORTNOFF PEAK
FIRE SAFETY DETAILED PLAN
PACIFIC GAS AND ELECTRIC COMPANY
SAN FRANCISCO, CALIFORNIA

MICROFILM	
BILL OF MATL	
DWG LIST	
SUPSDS	
SUPSD BY	
SHEET NO 3 OF 4 SHEETS	
	REV

DRAWING NUMBER B

Looked Vrets

Drawing: P:\714-2165 SN Portnoff\Original 2714165_fire_add.dwg, 3 Fire Safety Detailed Plan – BCF.ctb
Plot By: Gustavo Ruiz, Jun 25, 2014 - 2:42pm

SOUTH AND EAST ELEVATION

WEST AND SOUTH ELEVATION

NORTH AND WEST ELEVATION

BUILDING ELEVATIONS

NOT TO SCALE

AT NORTH END LOOKING SOUTH

AT SOUTH END LOOKING NORTHWEST

AT SOUTH END LOOKING NORTHEAST

BUILDING INTERIOR

NOT TO SCALE

FIRE SAFETY PLAN NOTES

PG&E PORTNOFF PEAK COMMUNICATIONS TOWER

1945 ADELAIDA ROAD, RURAL SOUTH COAST, SAN LUIS OBISPO COUNTY, CA

PREPARED: 4/25/2014

LAST UPDATED: 4/25/2014

FIRE REPORTING PROCEDURE:
DIAL 911 ON CELL TELEPHONE AND REPORT FIRE

YOUR ADDRESS IS: 1945 ADELAIDA ROAD, RURAL NORTH COAST, SAN LUIS OBISPO COUNTY, CA

YOUR LATITUDE IS: 35°38'47.40"N

OUR LONGITUDE IS: 120°44'14.50"

LIFE SAFETY STRATEGY:
1. THIS IS A CMU BUILDING IN A REMOTE AREA AND IS NOT OCCUPIED EXCEPT DURING MAINTENANCE VISITS.
2. PERSONNEL WHO ACCESS THE SITE ARE AMBULATORY AND WILL HAVE VEHICLES WHEN AT THE SITE.
3. EVACUATION OF THE SITE WILL BE BY VEHICLE FROM THE SITE ALONG THE PLANNED ESCAPE ROUTE THAT IS POSTED IN THE BUILDING.

MAJOR FIRE HAZARDS AT THIS SITE:
1. ELECTRICAL EQUIPMENT

PERSONS RESPONSIBLE FOR MAINTENANCE OF THE SITE FIRE SUPPRESSION EQUIPMENT
1. XXXXXXXXXXXXXXXXXX, PG&E EMPLOYEE – MAINTENANCE AND REPLACEMENT OF FIRE EXTINGUISHERS

PERSON RESPONSIBLE FOR MAINTENANCE OF THE SITE AND CONTROLLING FIRE FUEL HAZARD SOURCES
1. XXXXXXXXXXXXXXXXXX, PG&E EMPLOYEE – MAINTENANCE OF THE SITE, MAINTENANCE OF THE ELECTRICAL EQUIPMENT, AND REPLACEMENT OF HYDROGEN BOTTLES

811 Know what's below. Call before you dig.

PRELIMINARY
NOT FOR CONSTRUCTION

Blair, Church & Flynn
CONSULTING ENGINEERS
461 Clovis Avenue, Suite 200
Clovis, California 93612
Tel (559) 326-1400
Fax (559) 326-1500

REGISTERED PROFESSIONAL ENGINEER
EFREN BANUELOS
No. 68,505
CIVIL
STATE OF CALIFORNIA

REV	DATE	DESCRIPTION	JOB NO	DSG/DWN	CHKD	SUPV	APVD	REV	DATE	DESCRIPTION	JOB NO	DSG/DWN	CHKD	SUPV	APVD

REVISION 1
DSG EB
DWN DH
CHKD DAM
SUPV
APVD
APVD
DATE 4-25-14

COMMUNICATIONS TOWER
INSTALLATION
PORTNOFF PEAK
FIRE SAFETY PLAN NOTES
PACIFIC GAS AND ELECTRIC COMPANY
SAN FRANCISCO, CALIFORNIA

MICROFILM
BILL OF MATL
DWG LIST
SUPSDS
SUPSD BY
SHEET NO 4 OF 4 SHEETS
REV

DRAWING NUMBER

Drawing: A1214-0165.Sht 4Production\Drawings\1214165_BL.1067.dwg: 4 Fire Safety Plan Notes — BCF.ctb
Plot by: Banuelos, Efren Apr 25, 2014 7:42AM

026-233

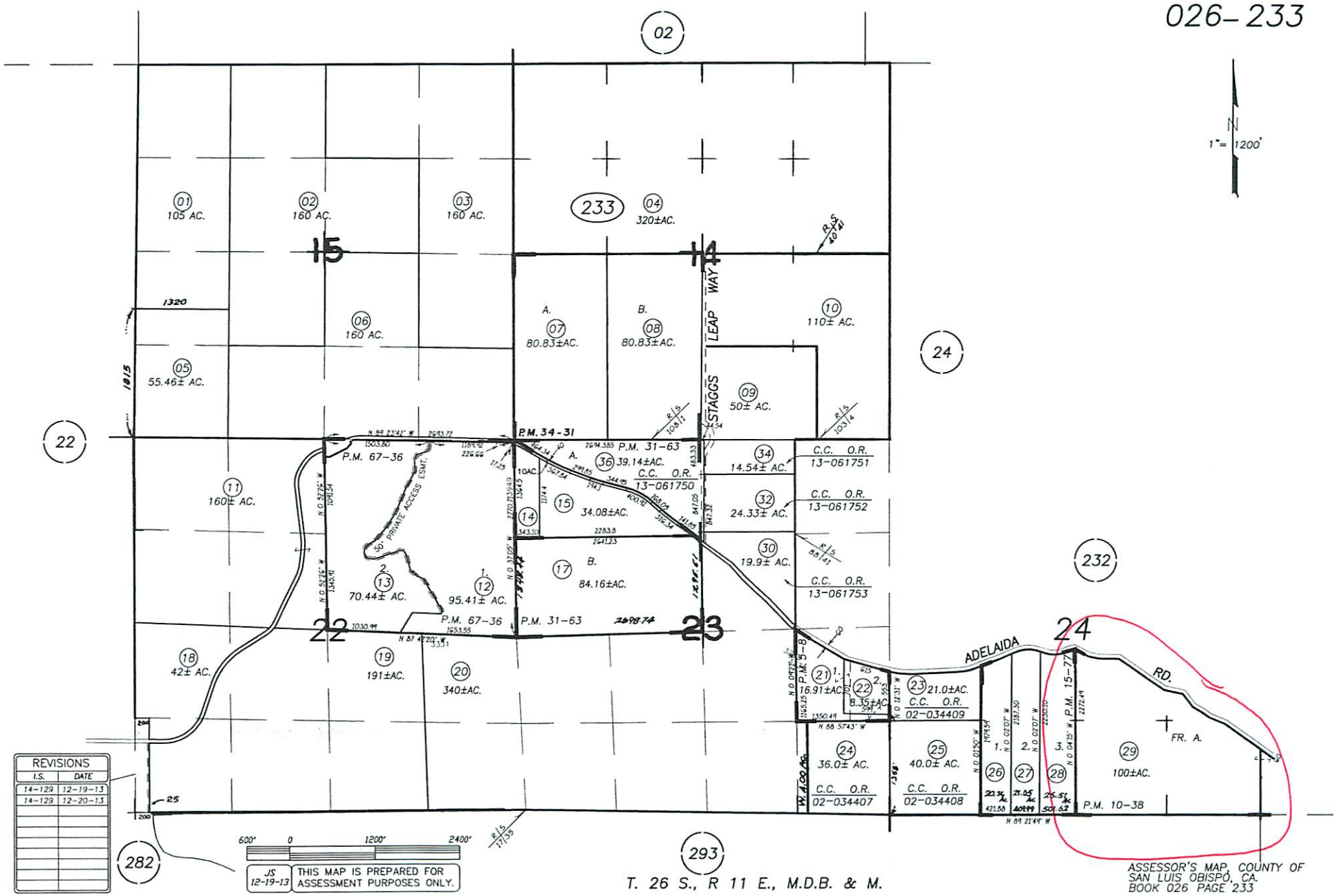

REVISIONS	
I.S.	DATE
14-129	12-19-13
14-129	12-20-13

JS 12-19-13 THIS MAP IS PREPARED FOR ASSESSMENT PURPOSES ONLY.

T. 26 S., R 11 E., M.D.B. & M.

ASSESSOR'S MAP, COUNTY OF SAN LUIS OBISPO, CA.
BOOK 026 PAGE 233

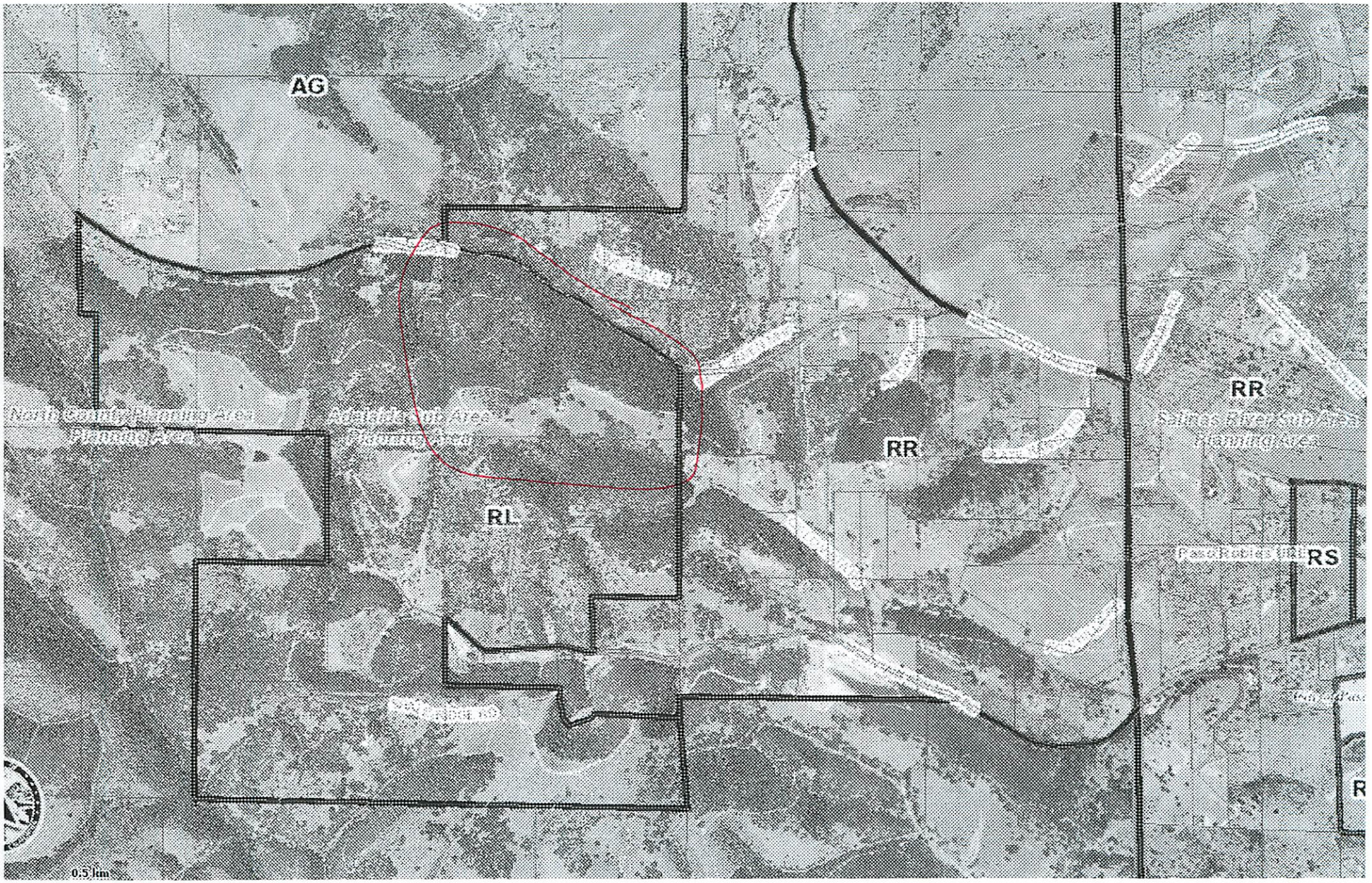
AG
North County Planning Area
Planning Area
Adelaide Sub Area
Planning Area
RL
RR
RR
Salinas River Sub Area
Planning Area
RS
0.5 km

Parcel Summary Report For Parcel # 026-233-029

7/22/2014
11:41:36AM

San Luis Obispo County Department of Planning and Building
County Government Center San Luis Obispo, California 93408 Telephone: (805) 781-5600

People Information

Role	Name and Address
OWN	PORTNOFF JUNE C 179 NIBLICK RD #173 PASO ROBLES CA 93446-4845
OWN	PORTNOFF WILLIAM P
OWN	PORTNOFF WP & JC REVOCABLE TRUST

Address Information

Status	Address
P	01945 ADELAIDA RD NCADEL
P	01935 ADELAIDA RD NCADEL

Lot Information:

Tract / Twnshp	Block / Range	Section	Community:	Plan/Area:	Lue 1:	Lue 2:	Lue 3:	Lot:	Flags:	Misc
CO72-	238	A-PT	North Cty. Plan	North County I	RL			Y	L2 / VP	D940098D / D940158D

Parcel Information

Status	Description
Active	PM 10/38 PTN PAR A

Notes

CO72-238, PARCEL A CONSISTS OF APNS: 026-233-029 AND 026-261-031 TOGETHER AS ONE LEGAL PARCEL. JSM 3/3/14

Tax Districts

PASO ROBLES JT(27,40) (SB1537)
SAN LUIS OBISPO JT(27,40)
PASO ROBLES PUBLIC
NO. 01
AREA NO. 21

Parcel Summary Report For Parcel # 026-233-029

San Luis Obispo County Department of Planning and Building
County Government Center San Luis Obispo, California 93408 Telephone: (805) 781-5600

PASO ROBLES UNION (SB1537 BLO)

Case Information

Case Number:	Case Status:	
70994	FNL	Primary Parcel

Description:
CONSTRUCT NEW TOWER

70997	FNL	Primary Parcel

Description:
CONSTRUCT NEW COMMUNICATIONS BLDG

A2827	FNL	Primary Parcel

Description:
UNMANNED COMMUNICATION FACILITY & TOWER

C2421	FNL	Primary Parcel

Description:
REPLACE 2 3TON AC UNITS W/5TON UNITS AT CELL SITE (TO REDUCE NOISE)

C6104	FNL	Primary Parcel

Description:
ELECTRIC UPGRADE CHANGE OUT ELECT GENERATOR NOT TO EXCEED 50 HP

C7828	FNL	Primary Parcel

Description:
REMOVE WHIP ANTENNNAS & REPLACE WITH 12 PANEL ANTENNAS 70' UP ON EXIST 100' TOWER

C8327	EXP	Primary Parcel

Description:
CELL SITE - VERIZON

COD2003-00379	CLD	Primary Parcel

Description:
CONDITION COMPLIANCE VIOLATION

COD2010-00524	CLD	Primary Parcel

Description:
SUB STANDARD

D000132P	APP	Primary Parcel

Description:
CELLULAR FACILITY- REPLACED BY VERIZON -D010227P/B012208-001

D010223P	CMP	Primary Parcel

Description:
CELL SITE FOR CELLULAR ONE - MODIFICATION

D010227P APP Primary Parcel

Description:

CELL SITE-VERIZON

D010263P CMP Primary Parcel

Description:

CELL SITE

D940098D CMP Primary Parcel

Description:

RADIO STATION & TOWER

D940158D CMP Primary Parcel

Description:

COMMERCIAL SITES FOR COMMUNICATIONS

D980036D APP Primary Parcel

Description:

CELLSITE/UNMANNED PERSONAL COMM. SERVICE

D980305D WIT Primary Parcel

Description:

ADD ANTENNA TO EXISTING FACILITY

DRC2004-00232 EX1 Primary Parcel

Description:

MUP - CINGULAR-CELL SITE/12 ATTENNAS, 11 1/2 X 28 EQUIPMENT SHELTER, 1 MICROWAVE DISH AND COAXIAL CABLES FROM EQUIPMENT SHELTER TO ANTENNA POWER AND TELCO SERVICE TO EQUIPMENT AREA

DRC2012-00043 APL Primary Parcel

Description:

1. THIS APPROVAL AUTHORIZES THE CONSTRUCTION AND OPERATION OF ONE UNMANNED WIRELESS COMMUNICATIONS FACILITY, CONSISTING OF THE FOLLOWING IMPROVEMENTS:

A. INSTALLATION OF SIX (6) 26-INCH, TWO (2) 39-INCH, AND ONE (1) 51-INCH MICROWAVE ANTENNAS ONTO AN EXISTING 100-FOOT TOWER. NO PORTIONS OF THE MICROWAVES WOULD EXTEND PAST THE LARGER EXISTING MICROWAVES,

B. INSTALLATION OF ONE (1) 60 SQUARE FOOT CONCRETE SLAB AND IN ORDER TO MOUNT ONE MICROWAVE CABINET AND ONE POWER CABINET,

C. UNDERGROUND INSTALLATION (FOR A 3-INCH CONDUIT) OF TELECOMMUNICATIONS SERVICE UTILITY LINES (APPROXIMATELY 30 FEET) A FROM EXISTING CONNECTION POINTS TO THE PROPOSED EQUIPMENT AREA,

2. ALL DEVELOPMENT SHALL BE CONSISTENT WITH THE APPROVED SITE PLAN, EQUIPMENT LAYOUT PLAN, AND ARCHITECTURAL ELEVATIONS.

3. THE SITE IS ACCESSED FROM AN EXISTING ON-SITE ROAD. NO ACCESS ROAD IMPROVEMENTS ARE NECESSARY.

DRC2014-00006 REC Primary Parcel

Description:

ONE 100-FOOT TALL TELECOMMUNICATIONS TOWER, TWO WHIP ANTENNAS, SIX DISHES(9.0,28.27, 50.27(3),78.54 SF EACH)15X15 FOUNDATION(TOTAL AREA WITHIN LEASE ENCLOSURE IS 2,500 SF). EXISTING 170 SF SHELTER TO BE MODIFIED AND USED FOR FACILITY.

E020523 CLD Primary Parcel

Description:

UNPERMITTED CELL SITE ADDITION / NOISE

PMT2002-12948 EXP Primary Parcel

Description:

CHANGE OUT EXISTING ANTENNA

PMT2003-01393 FNL Primary Parcel

Description:

4 PANEL STYLE ANTENNAS ATTACHED TO PREVIOUSLY PERMITTED TOWER (PERMIT NOS. 95316, 95317)) FOR CAMINO REAL BROADCASTING

PMT2004-00955 FNL Primary Parcel

Description:

CELL SITE AND TOWER - VERIZON/CROWN CASTLE

PMT2005-02398 FNL Primary Parcel

Description:

REMOVE AND REPLACE 100 AMP SERVICE

PMT2006-01891 FNL Primary Parcel

Description:

SPRINT/NEXTEL - REPLACE 3 WHIP WITH PANEL ANTENNAS & ADD EQUIPMENT CABINET IN EXISTING SHELTER (DRC2004-00232)

PMT2008-01984 FNL Primary Parcel

Description:

AT& T - REMOVE EXISTING TOWER, INSTALL 103' MONOPINE, 6 ANTENNAS, 3 OUTDOOR CABINETS ON CONCRETE SLAB, NEW ELECTRICAL AND TELCO SERVICE, ONE 15' POLE AND CAISSON FOR DISH ANTENNA (DRC2004-00232)

PMT2008-02178 FNL Primary Parcel

Description:

VERIZON - REMOVE 150 GALLON ABOVE GROUND FUEL TANK & REPLACE WITH A 210 GALLON BELLY TANK UL142 FOR EXISTING GENERATOR

PMT2012-00635 REC Primary Parcel

Description:

AT&T -REPLACE 6 ANTENNAS ON EXISTING MONOPINE, ADD RELATED EQUIPMENT TO EXISTING CONCRETE PAD WITHIN FENCED EQUIPMENT AREA, #VN0008

PMT2013-00296 FNL Primary Parcel

Description:

AT&T - INSTALL EQUIPMENT CABINETS & OTHER WIRELESS EQUIPMENT IN EXISTING EQUIPMENT AREA - (NO NEW ANTENNAS) DRC2004--00232. (AT&T - VN0008)

Parcel Summary Report For Parcel # 026-233-029

San Luis Obispo County Department of Planning and Building
County Government Center San Luis Obispo, California 93408 Telephone: (805) 781-5600

PMT2013-02897 REC Primary Parcel

Description:

AT&T - INSTALL 12 PANEL ANTENNAS, 30 RRU'S, 5 SURGE SUPRESSORS, & 3 FIBER BOXES ON EXISTING MONOPINE. ADD 2 CABINETS TO EQUIPMENT AREA. STRUCTURAL UPGRADE OF MONOPINE (AT&T - VN0008)

PMT2014-00190 REC Primary Parcel

Description:

CELL TOWER - CONSTRUCT NEW 100-FOOT TALL TELECOMMUNICATIONS TOWER, ATTACH TWO WHIP ANTENNA, ATTACH SIX DISHES (9.0, 28.27, 50.27 [3], AND 78.54 SF EACH), MODIFY EXISTING EQUIPMENT SHELTER AND INSTAL EQUIPMENT, INSTALL FUEL CELL

94701 FNL Related Parcel

Description:

CONSTR CELLULAR FACILITY AT EXISTING SIT

95316 FNL Related Parcel

Description:

CONST RADIO TRANSMITTER HOUSING (CARGO CONTAINER)

95317 FNL Related Parcel

Description:

CONST ANTENNA FOR RADIO STAION

A0813 FNL Related Parcel

Description:

REPLACE EXISTING MICROWAVE ANTENNAS

A3321 FNL Related Parcel

Description:

EMERGENCY PROPANE GENERATOR FOR CELL SITE

A6358 FNL Related Parcel

Description:

ANTENNA ADDITION TO EXISTING TELECOM. SITE

D930287D CMP Related Parcel

Description:

TELECOMMUNICATION FACILITY

PMT2002-23319 WIT Related Parcel

Description:

TELECOMMUNICATION BUILDING

S000090P WIT Related Parcel

Description:

DIVIDE INTO 3 PARCELS

S890369P EXP Related Parcel

Description:

PROPOSED 3 LOT DIVISION

Parcel Summary Report For Parcel # 026-233-029

San Luis Obispo County Department of Planning and Building
County Government Center San Luis Obispo, California 93408 Telephone: (805) 781-5600

SUB2003-00324 WIT Related Parcel

Description:
PROP 3 LOTS