Dr
300
Joan
Pl
Gary
Pl
Marshall
Way
Peters
Pl
Dr
Charles
255

COUNTY OF SAN LUIS OBISPO

PLANS FOR CONSTRUCTION

COUNTY SERVICE AREA NO. 18
SANITARY SEWER PROJECT

EPA PROJECT NO. C-06-1671-110

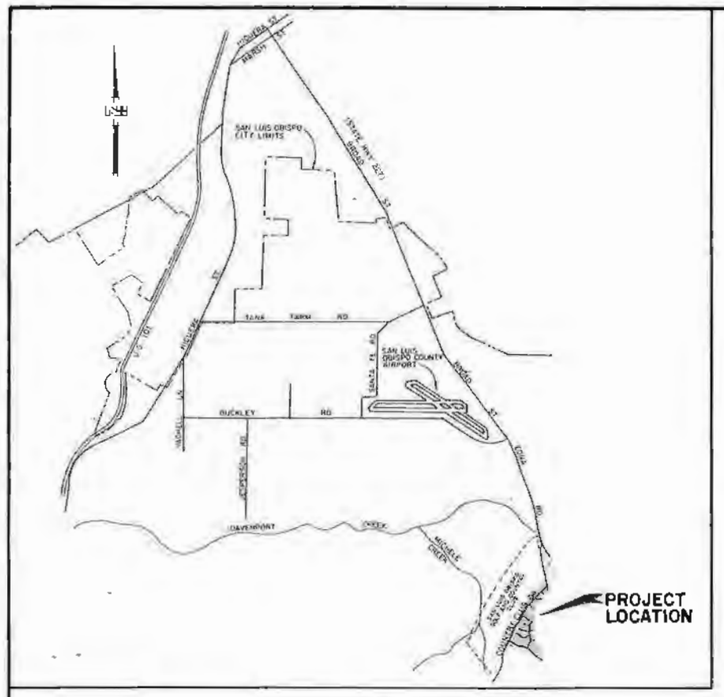

LOCATION MAP

0 0.5 1.0
SCALE (MILES)

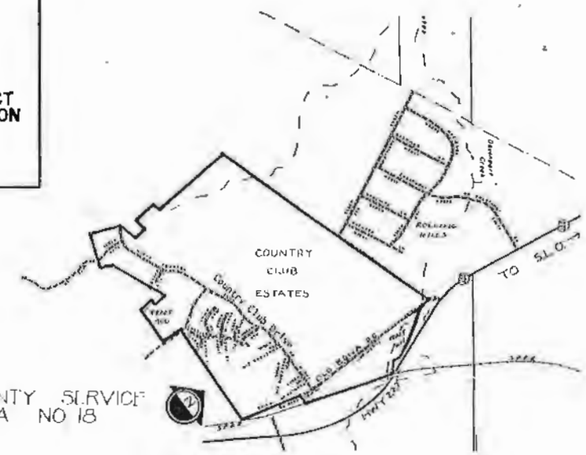

Microfiche starts 32797

GENERAL NOTES

1. THE CONTRACTOR SHALL BE SOLELY AND COMPLETELY RESPONSIBLE FOR CONDITION OF PREMISES ON WHICH THE WORK IS PERFORMED AND FOR SAFETY OF ALL PERSONS AND PROPERTY ON THE SITE, BOTH DURING AND OUTSIDE OF NORMAL WORKING HOURS, UNTIL SUCH WORK IS ACCEPTED BY THE COUNTY.

2. FOR ALL EXCAVATIONS 5 FEET OR MORE IN DEPTH THE CONTRACTOR SHALL OBTAIN A PERMIT FROM THE DIVISION OF INDUSTRIAL SAFETY (3704 STATE STREET, SUITE 307, SANTA BARBARA, CA 93105, PHONE (805) 682-2578) PRIOR TO BEGINNING THE EXCAVATION. A COPY OF THIS PERMIT SHALL BE AVAILABLE AT THE CONSTRUCTION SITE AT ALL TIMES DURING THE WORK.

3. THE CONTRACTOR OR ANY SUBCONTRACTORS SHALL NOTIFY MEMBERS OF THE UNDERGROUND SERVICE ALERT (U.S.A.) ONE-CALL PROGRAM 48 HOURS IN ADVANCE OF PERFORMING EXCAVATION. WORK BY CALLING THE TOLL FREE NUMBER 800-642-2444. EXCAVATION IS DEFINED AS BEING 18 OR MORE INCHES IN DEPTH BELOW THE EXISTING SURFACE.

4. THE TYPES, LOCATIONS, SIZES AND/OR DEPTHS OF EXISTING UNDERGROUND UTILITIES AS SHOWN ON THESE IMPROVEMENT PLANS WERE OBTAINED FROM SOURCES OF VARYING RELIABILITY. THE CONTRACTOR IS CAUTIONED THAT ONLY ACTUAL EXCAVATION WILL REVEAL THE TYPES, EXTENT, SIZES, LOCATIONS AND DEPTHS OF SUCH UNDERGROUND UTILITIES. A REASONABLE EFFORT HAS BEEN MADE TO LOCATE AND DELINEATE ALL KNOWN UNDERGROUND UTILITIES. HOWEVER, GEORGE S. NOLTE AND ASSOCIATES CAN ASSUME NO RESPONSIBILITY FOR THE COMPLETENESS OR ACCURACY OF ITS DELINEATION OF SUCH UNDERGROUND UTILITIES NOR FOR THE EXISTENCE OF OTHER BURIED OBJECTS OR UTILITIES WHICH MAY BE ENCOUNTERED BUT WHICH ARE NOT SHOWN ON THESE DRAWINGS. SEE CONSTRUCTION DOCUMENTS REGARDING UTILITY CONFLICTS.

5. WHENEVER THE WORK AREA IS ADJACENT TO A TRAFFIC LANE AND THERE IS A PAVEMENT CUT, DITCH OR TRENCH OVER 2 INCHES DEEP, THE CONTRACTOR SHALL MAINTAIN CONTROL, WARNING AND GUIDANCE DEVICES IN ACCORDANCE WITH WORK AREA TRAFFIC CONTROL HANDBOOK PUBLISHED BY BUILDING NEWS, INC., THIRD EDITION, AND THE CONTRACT DOCUMENTS.

6. THE CONTRACTOR SHALL BE RESPONSIBLE FOR LAYOUT OF THE WORK. SEE SPECIFICATIONS REGARDING CONSTRUCTION STAKING TO BE PROVIDED BY THE ENGINEER.

LICENSE REQUIREMENTS

The successful bidder shall possess a Class A general engineering contractor's license at the time this contract is awarded. In the alternative, the successful bidder shall possess a specialty contractor's license at the time this contract is awarded that permits the successful bidder to perform with his or her own organization contract work amounting to not less than 50% of the original total contract price and to subcontract the remaining work in accordance with Section 8-1.01, "Subcontracting," of the Standard Specifications.

PREPARED BY

GEORGE S. NOLTE AND ASSOCIATES
1700 L Street, Sacramento, California 95814 (916)446-5020

JENSEN - LENGER
LICENSED LAND SURVEYORS
P. O. BOX 1115
SAN LUIS OBISPO, CA. 93406
(805)544-6449

TERADA ENGINEERING
1570 THE ALAMEDA SUITE 221
SAN JOSE CA. 95126
(408) 294-1445

SUBMITTED BY: David E. Anderson
DAVID ANDERSON RCE 27659
PROJECT ENGINEER
GEORGE S. NOLTE AND ASSOCIATES

RECOMMENDED FOR APPROVAL: January 23, 1987
Clinton Milne
DEPUTY COUNTY ENGINEER R.C.E. 10585 (Exp. 12-31-88)

APPROVED: JAN. 26, 1987
G. C. Petrys
COUNTY ENGINEER R.C.E. 10197 (Exp. 12-31-88)

SHEET 1 of 14

Collection System
CSA 18 <EPA ETC

They don't say As Built but does show revisions

As Built (I think?)
Tony Boyd
May 1996

CSA-18 (2)

2 copies
STP CSA-18
WTP
Old County Courthouse
- Extras for Sewer Project

GEORGE S. NOLTE AND ASSOCIATES
san jose · sacramento · san diego · walnut creek

REV	REVISED ALIGNMENT IN LOS RANCHOS RD TO AVOID TREES	4-23-87 KMF

DATE	JUNE 1985
SCALE	1"=200'
DESIGNED	D.J.A. /KMF
DRAWN	KMF
CHECKED	
PROJ ENGR	

SAN LUIS OBISPO COUNTY SERVICE AREA NO. 18
SANITARY SEWER PROJECT

INDEX SHEET

SHEET 2 OF 14 SHEETS
JOB NO. 2120-85-01

INDEX OF DRAWINGS

SHEET NO	DESCRIPTION
1	COVER SHEET
2	INDEX SHEET
3	COUNTRY CLUB DR STA 1+00 TO 15+00
4	COUNTRY CLUB DR 15+00 TO 29+05
5	COUNTRY CLUB DR STA 29+05 TO 32+40.43
	OFFSITE/MADBURY CT. STA. 7+23 19+46.19
6	LOS RANCHOS RD STA 3+00 TO 18+93.28
7	LOS RANCHOS RD STA 18+93.28 TO 28+16.25
8	LEWIS LANE
	LOS RANCHOS RD STA 1+00 TO 3+00
9	CHARLES DR /MARSHALL WAY
10	JOAN PLACE,GARY PLACE,GALLANT PLACE
11	KATHY CT,GLENHEIM CT,ANNEFORD CIRCLE
12	PUMP STATION NO. 1 SITE PLAN
	PUMP STATION NO. 2 SITE PLAN
	SEWAGE PUMPING STATION DETAIL
13	DETAIL SHEET
14	PUMP STATIONS 1 AND 2 ELECTRICAL

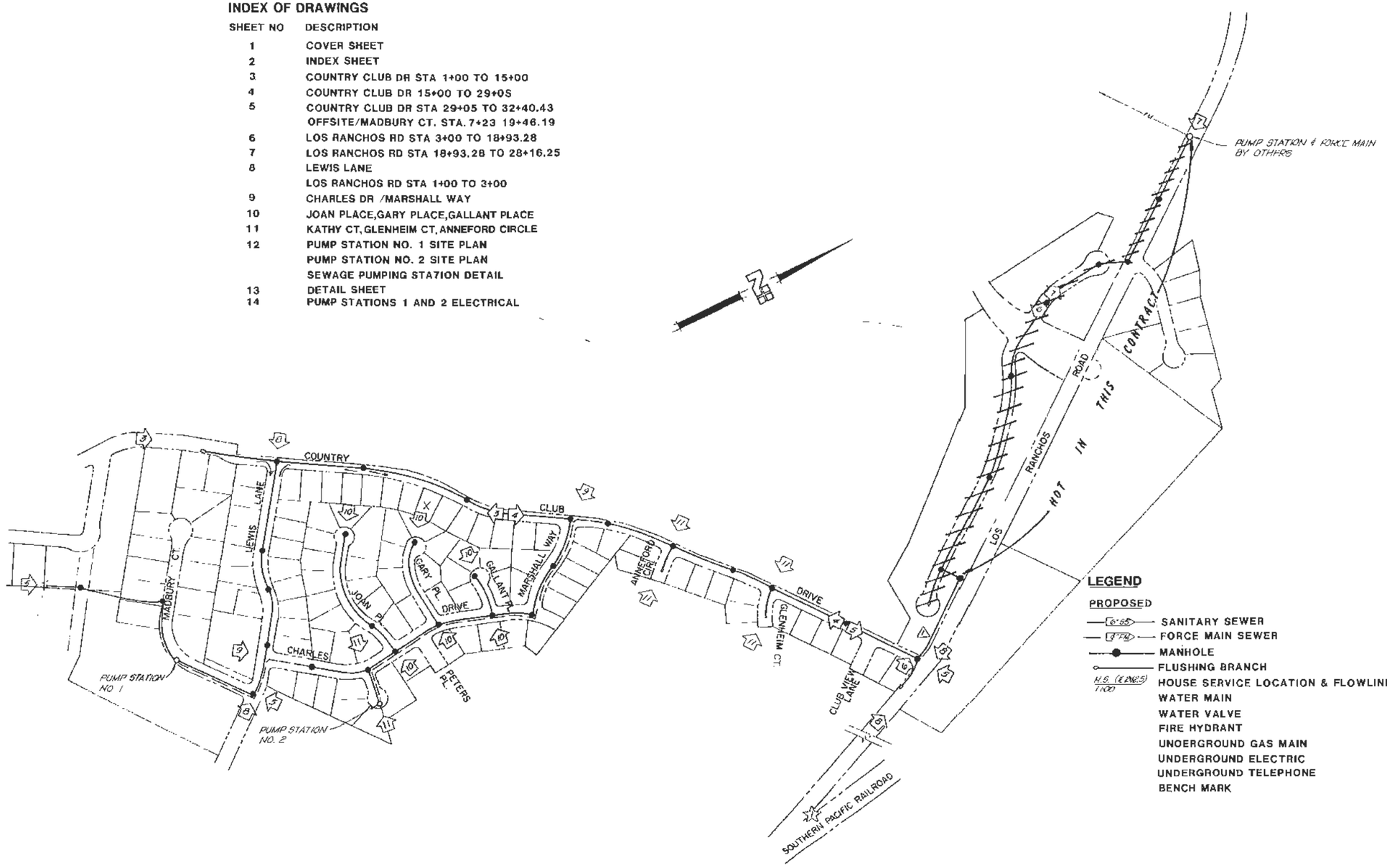

LEGEND

PROPOSED		EXISTING
6"SS	SANITARY SEWER	6"SS
3"FM	FORCE MAIN SEWER	
	MANHOLE	
	FLUSHING BRANCH	
H.S. (E 262.5) / 1:100	HOUSE SERVICE LOCATION & FLOWLINE ELEVATION	
	WATER MAIN	W 6"
	WATER VALVE	
	FIRE HYDRANT	
	UNDERGROUND GAS MAIN	G 2"
	UNDERGROUND ELECTRIC	E
	UNDERGROUND TELEPHONE	T
	BENCH MARK	

BENCH MARK ELEVATION = 250.62
U.S.C. & G.S. "K-533" LOCATED AT THE INTERSECTION OF THE NORTHEASTERLY RIGHT OF WAY OF LOS RANCHOS ROAD AND THE SOUTHWESTERLY RIGHT OF WAY OF SOUTHERN PACIFIC RAILROAD CO.

REGISTERED PROFESSIONAL ENGINEER
DAVID J. ANDERSON
No 27659
CIVIL
STATE OF CALIFORNIA

GEORGE S. NOLTE AND ASSOCIATES
san jose · sacramento · san diego · walnut creek

DATE	JUNE 1985
SCALE	HORIZ. 1" = 50' VERT. 1" = 10'
DESIGNED	D.J.A./KMF
DRAWN	KMF
CHECKED	
PROJ. ENGR.	

SAN LUIS OBISPO COUNTY SERVICE AREA NO. 18
SANITARY SEWER PROJECT

COUNTRY CLUB DR STA 1+00 TO 15+00

SHEET 3 OF 14 SHEETS
JOB NO. 2120-85-01

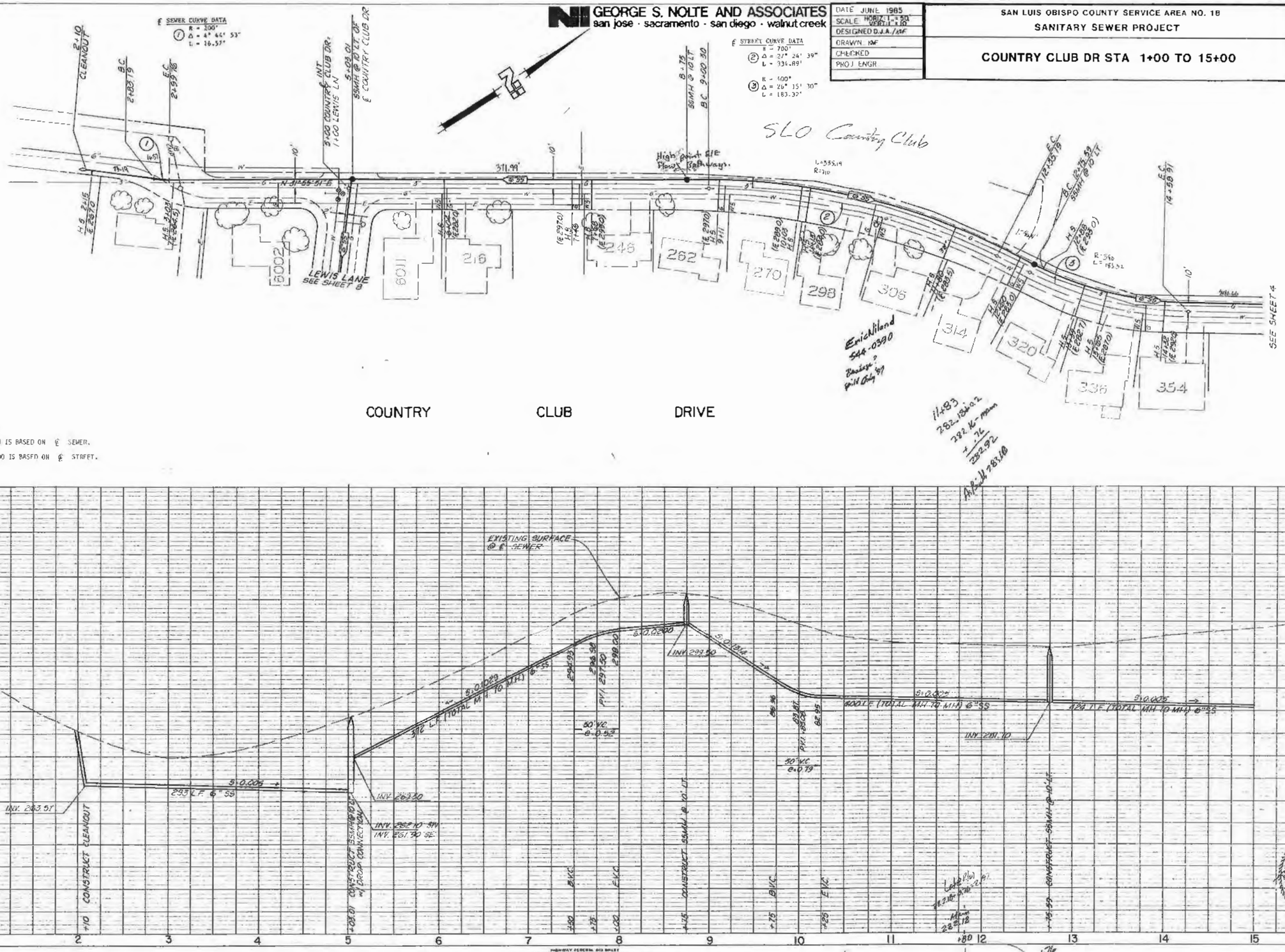

NOTE:

STATIONING FROM 1+00 TO 5+00 IS BASED ON ℄ SEWER.

STATIONING FROM 5+00 TO 15+00 IS BASED ON ℄ STREET.

PLATE 1-SINGLE PLAN AND PROFILE FULL LINE
WITELONE
PRINTED IN U.S.A.

PLAN
SUBMITTED
RECOMMENDED
NOTE SCALE CHANGES CHECKED
BY OR WAY CHECKED
INC

PROFILE
SUBMITTED
RECOMMENDED
NOTE SCALE CHANGES CHECKED
BY WAY NOTED
STRUCTURE DIMENSIONS CHECKED
NO.

GEORGE S. NOLTE AND ASSOCIATES
san jose · sacramento · san diego · walnut creek

REV.	REVISED SLOPE & INV.	3-11-87	KMF
REV. 2	REVISED SLOPE & INV.	4-27-87	KMF

DATE: JUNE 1985
SCALE: HORIZ. 1" = 50' VERT. 1" = 10'
DESIGNED: D.J.A. / KMF
DRAWN: KMF
CHECKED:
PROJ. ENGR.:

SAN LUIS OBISPO COUNTY SERVICE AREA NO. 18
SANITARY SEWER PROJECT

COUNTRY CLUB DR. STA 15+00 TO 29+05

SHEET 4 OF 14 SHEETS
JOB NO. 2120-85-01

℄ STREET CURVE DATA
(1) R = 700' Δ = 20° 52' 00" L = 254.93'
(2) R = 1,000' Δ = 6° 03' 30" L = 105.74'
(3) R = 1,000' Δ = 5° 43' 30" L = 99.92'

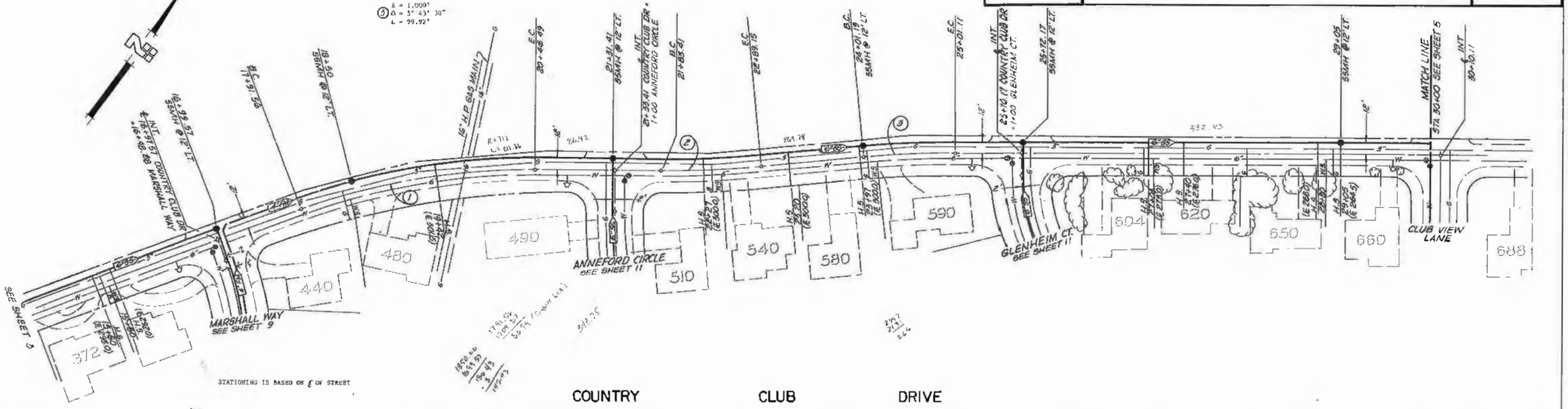

PLAN
NOTE BOOK No.
SURVEYED
PLOTTED
ALIGNMENT CHECKED
BY OR WAY CHECKED

PROFILE
NOTE BOOK No.
SURVEYED
PLOTTED
GRADES CHECKED
B.M.'s NOTED
STRUCTURE NOTATIONS CHECKED

HIGHWAY FEDERAL AID SHEET
PLATE 1-SINGLE PLAN AND PROFILE-FULL LINE
PRINTED IN U.S.A.

GEORGE S. NOLTE AND ASSOCIATES
san jose · sacramento · san diego · walnut creek

REV.		
1	REVISED ALIGNMENT IN LOS RANCHOS RD. (85/12)	3-11-87 KMF
2	REVISED ALIGNMENT IN LOS RANCHOS RD TO AVOID TREES	4-23-87 KMF

DATE: JUNE 1985
SCALE: HORIZ. 1"=20' VERT. 1"=10'
DESIGNED D.J.A./KMF
DRAWN KMF
CHECKED:
PROJ. ENGR.:

SAN LUIS OBISPO COUNTY SERVICE AREA NO. 18
SANITARY SEWER PROJECT
OFFSITE/MADBURY CT. STA. 7+23 TO 19+46.19
COUNTRY CLUB DR. STA 29+05 TO 32+40.43

SHEET 5 OF 14 SHEETS
JOB NO. 2120-85-01

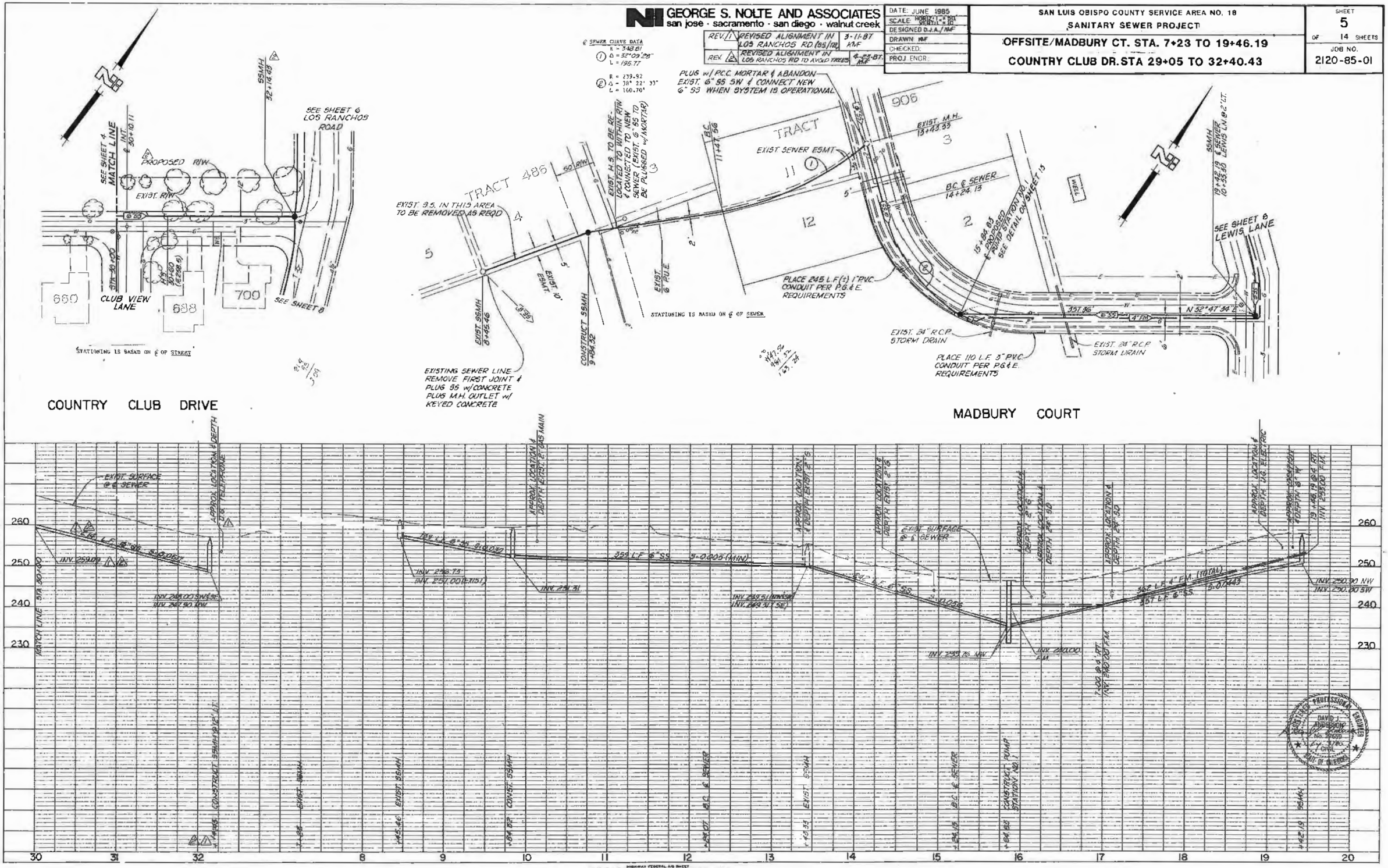

PLATE 1-SINGLE PLAN AND PROFILE-FULL LINE

GEORGE S. NOLTE AND ASSOCIATES
san jose · sacramento · san diego · walnut creek

REV 1	REVISED ALIGNMENT IN LOS RANCHOS RD	3-11-87 KMF
REV 2	REVISED ALIGNMENT IN LOS RANCHOS RD TO AVOID TREES	4-23-87 KMF

DATE JUNE 1985
SCALE HORIZ. 1" = 20' VERTIC. 1" = 10'
DESIGNED D.J.A./KMF
DRAWN: KMF
CHECKED:
PROJ. ENGR.:

SAN LUIS OBISPO COUNTY SERVICE AREA NO. 18
SANITARY SEWER PROJECT

LOS RANCHOS RD. STA 3+00 TO 18+93.28

SHEET 6 OF 14 SHEETS
JOB NO. 2120-85-01

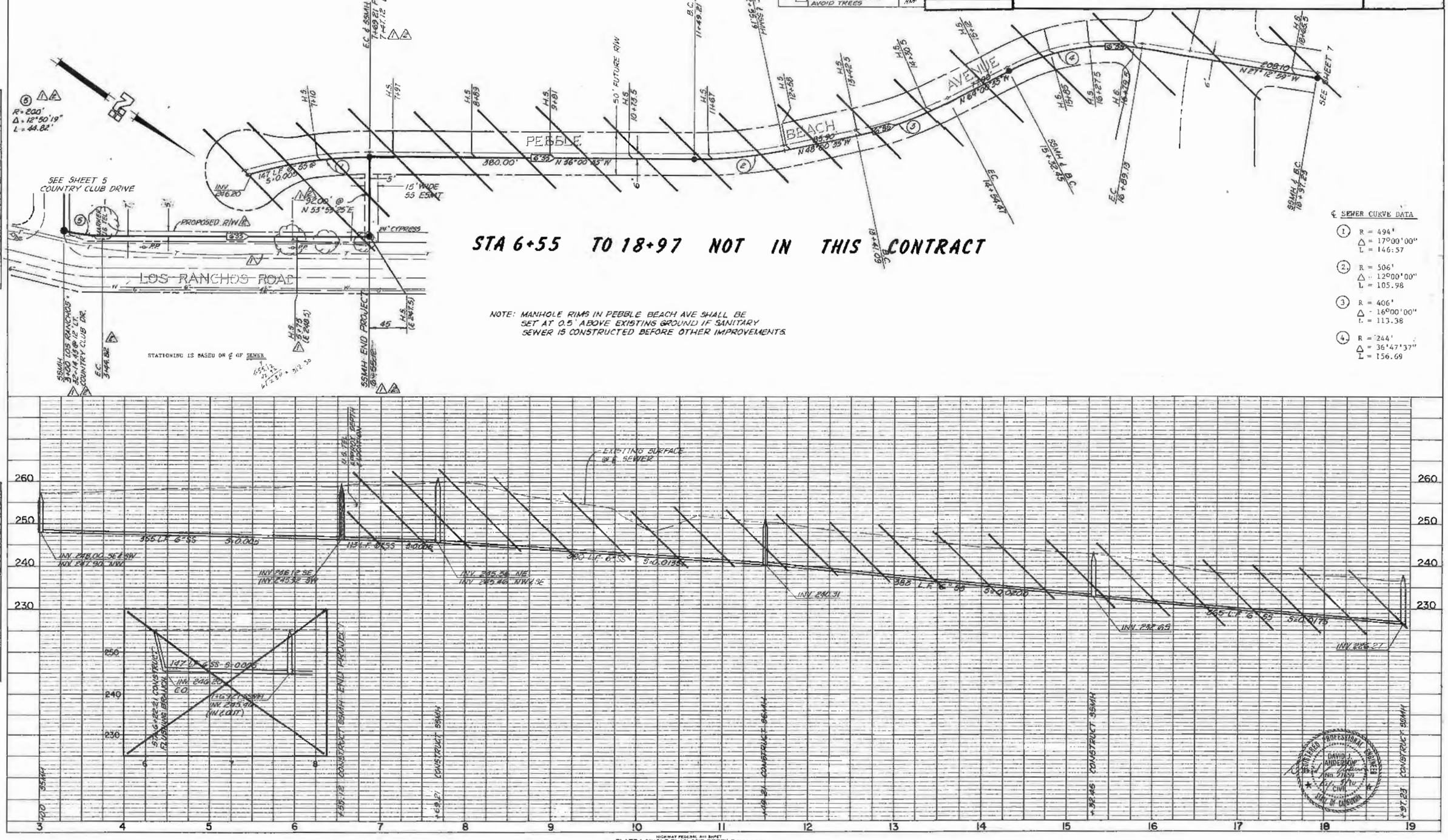

PLATE 1-SINGLE PLAN AND PROFILE-FULL LINE

GEORGE S. NOLTE AND ASSOCIATES
san jose · sacramento · san diego · walnut creek

DATE: JUNE 1985	
SCALE: HORIZ. 1" = 50' VERT. 1" = 10'	
DESIGNED D.J.A. /MF	
DRAWN MF	
CHECKED	
PROJ. ENGR.	

SAN LUIS OBISPO COUNTY SERVICE AREA NO. 18
SANITARY SEWER PROJECT

LOS RANCHOS RD STA 18+93.28 TO 28+16.25

SHEET 7 OF 14 SHEETS
JOB NO. 2120-85-01

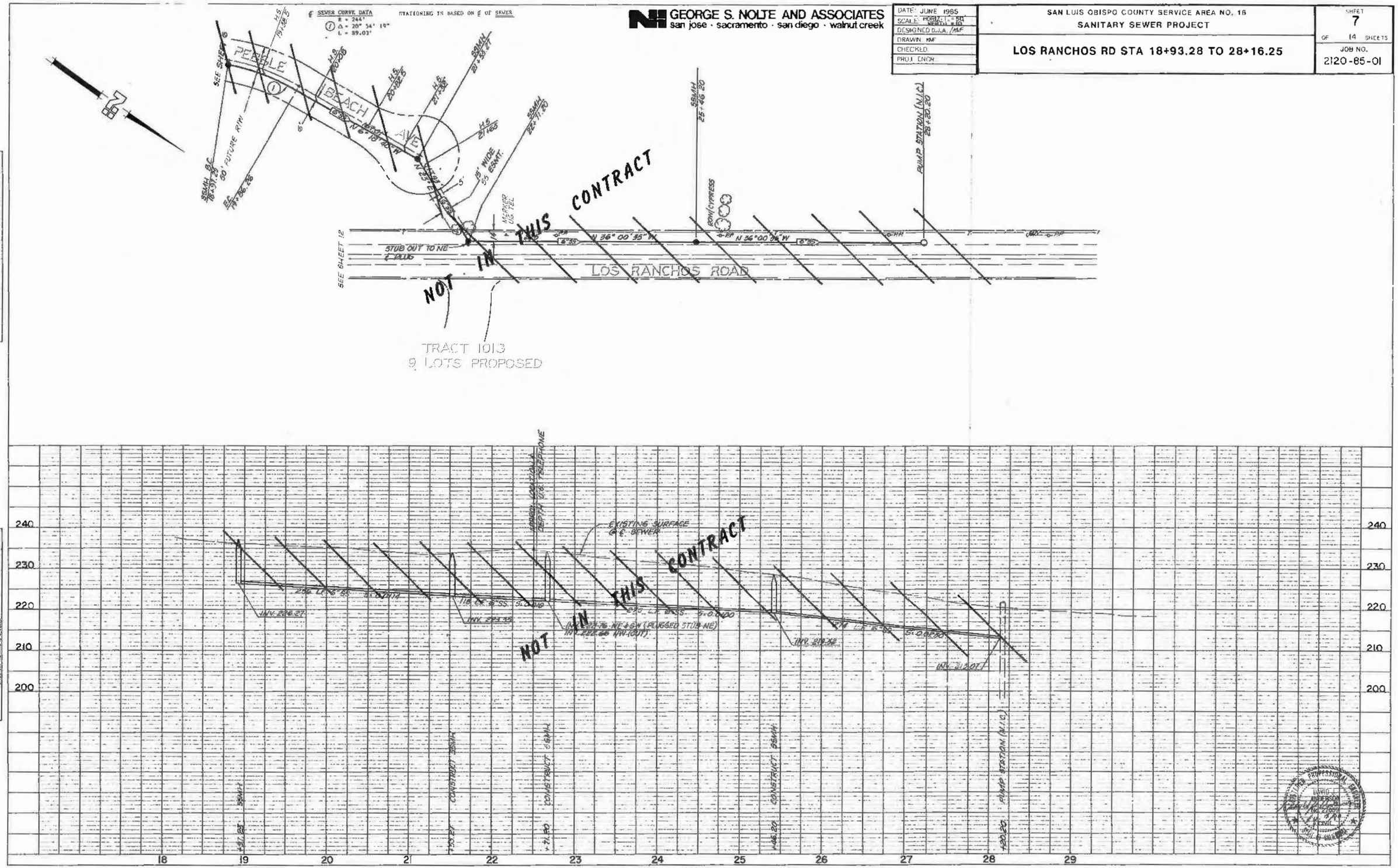

PLATE 1-SINGLE PLAN AND PROFILE-FULL LINE

STATIONING IS BASED ON ℄ OF STREET

℄ STREET CURVE DATA
(1) R = 300' Δ = 32° 51' 36" L = 172.05'
(2) R = 200' Δ = 32° 51' 36" L = 114.70'

GEORGE S. NOLTE AND ASSOCIATES
san jose · sacramento · san diego · walnut creek

REV.		
1	REVISED ALIGNMENT IN LOS RANCHOS RD	3-11-87 KMF
2	REVISED ALIGNMENT IN LOS RANCHOS RD TO AVOID TREES	4-29-87 KMF

℄ SEWER CURVE DATA
(3) R = 200' Δ = 15° 10' 03" L = 52.95'

DATE	JUNE 1985
SCALE	HORIZ. 1" = 20' VERT. 1" = 10'
DESIGNED D.J.A.	KMF
DRAWN	KMF
CHECKED:	
PROJ. ENGR.	

SAN LUIS OBISPO COUNTY SERVICE AREA NO. 18
SANITARY SEWER PROJECT

LEWIS LANE
LOS RANCHOS RD STA 1+00 TO 3+00

SHEET 8 OF 14 SHEETS
JOB NO. 2120-85-01

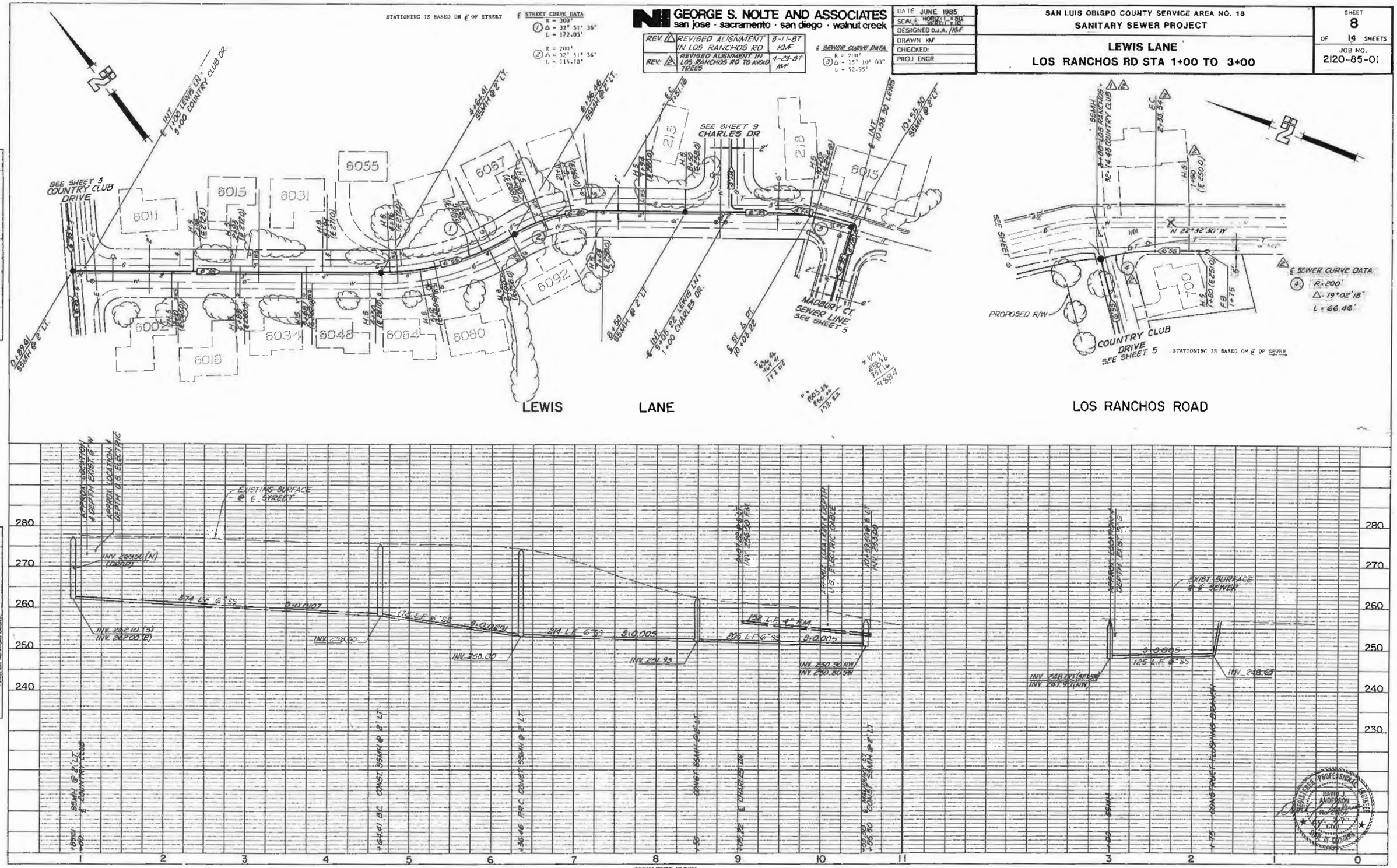

PLATE 1-SINGLE PLAN AND PROFILE-FULL LINE

GEORGE S. NOLTE AND ASSOCIATES
san jose · sacramento · san diego · walnut creek

DATE	JUNE 1985
SCALE	HORIZ: 1" = 50' VERT: 1" = 10'
DESIGNED	D.J.A. / KMF
DRAWN	KMF
CHECKED	
PROJ. ENGR	

SAN LUIS OBISPO COUNTY SERVICE AREA NO. 18

SANITARY SEWER PROJECT

CHARLES DR/ MARSHALL WAY

SHEET 9 OF 14 SHEETS

JOB NO. 2120-85-01

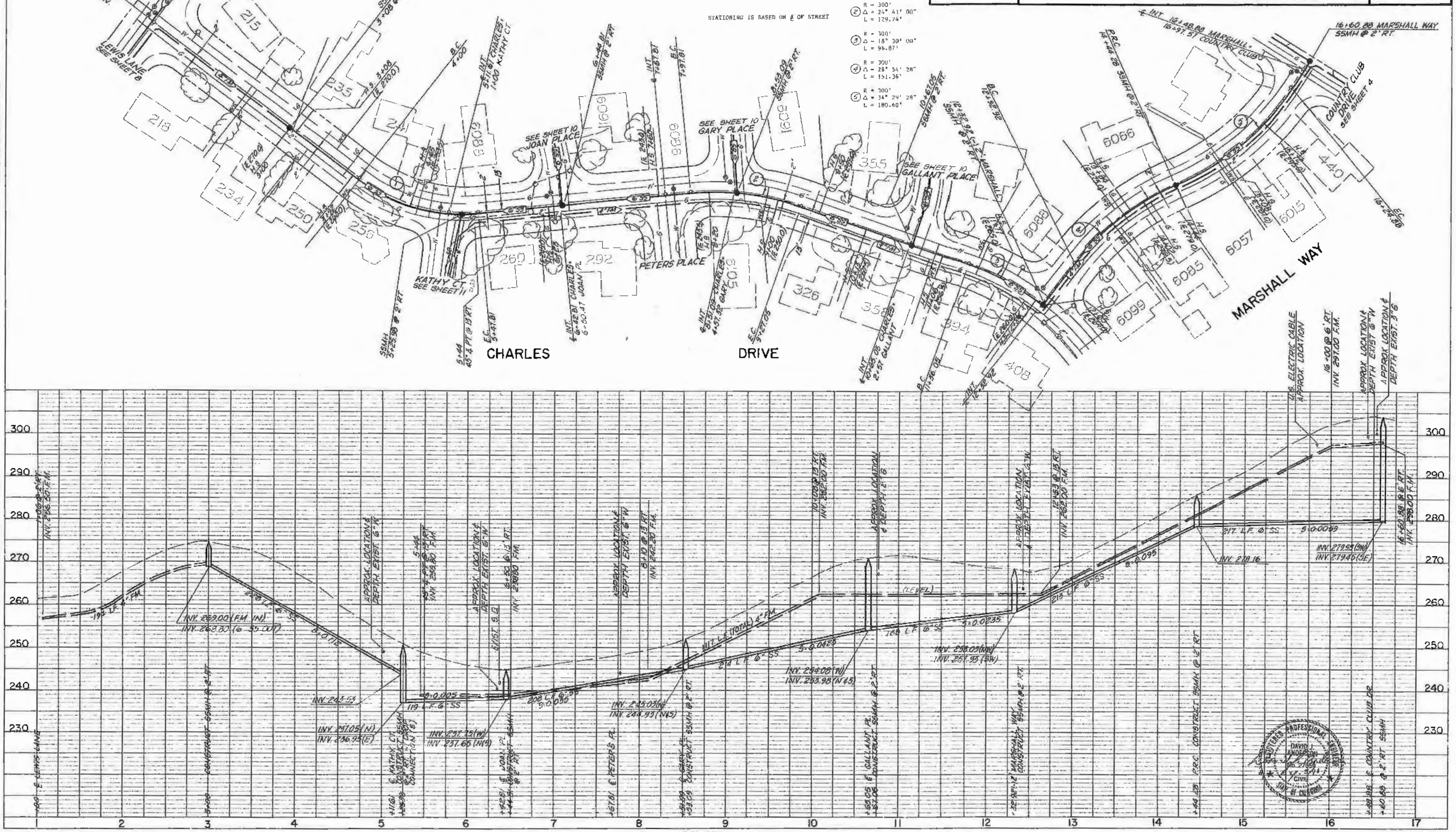

PLAN | NOTE BOOK | No. | SURVEYED | PLOTTED | ALIGNMENT CHECKED | R. OF WAY CHECKED

PROFILE | NOTE BOOK | No. | SURVEYED | PLOTTED | GRADES CHECKED | B.M.'s NOTED | STRUCTURE NOTATIONS CHECKED

HIGHWAY FEDERAL AID SHEET
PLATE 1-SINGLE PLAN AND PROFILE-FULL LINE
TELEDYNE
PRINTED IN U.S.A.

GEORGE S. NOLTE AND ASSOCIATES
san jose · sacramento · san diego · walnut creek

DATE	JUNE 1985
SCALE	HORIZ: 1" = 50' VERT: 1" = 10'
DESIGNED	D.J.A. / KMF
DRAWN	KMF
CHECKED	
PROJ. ENGR.	

SAN LUIS OBISPO COUNTY SERVICE AREA NO. 18
SANITARY SEWER PROJECT

JOAN PLACE
GARY PLACE
GALLANT PLACE

SHEET 10 OF 14 SHEETS

JOB NO. 2120-85-01

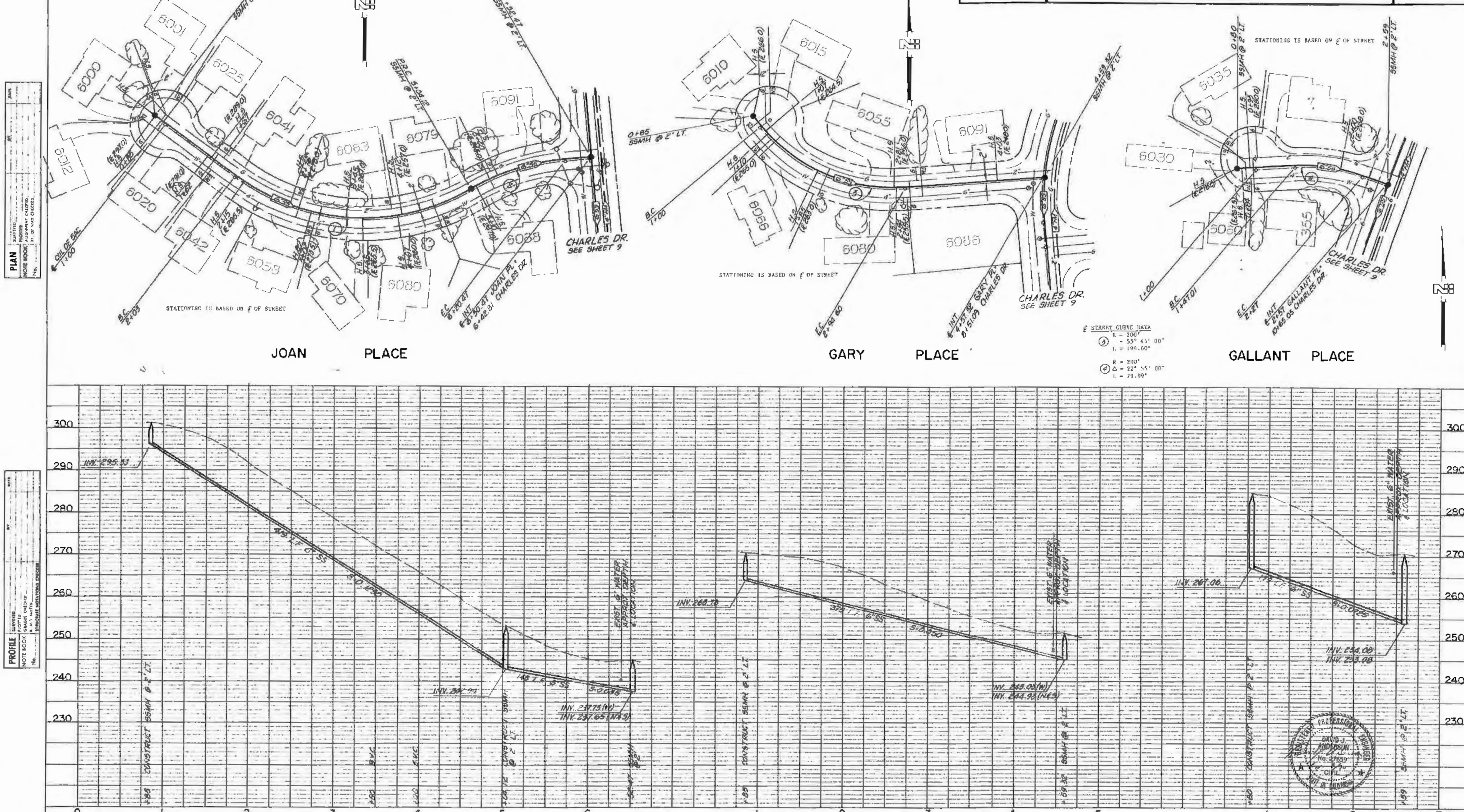

PLATE 1-SINGLE PLAN AND PROFILE-FULL LINE

GEORGE S. NOLTE AND ASSOCIATES
san jose · sacramento · san diego · walnut creek

DATE	JUNE 1985
SCALE	HORIZ. 1"=20' VERT. 1"=10'
DESIGNED	D.J.A. / RAF
DRAWN	RAF
CHECKED	
PROJ. ENGR.	

SAN LUIS OBISPO COUNTY SERVICE AREA NO. 18
SANITARY SEWER PROJECT

KATHY CT
GLENHEIM CT
ANNEFORD CIRCLE

SHEET 11 OF 14 SHEETS
JOB NO. 2120-85-01

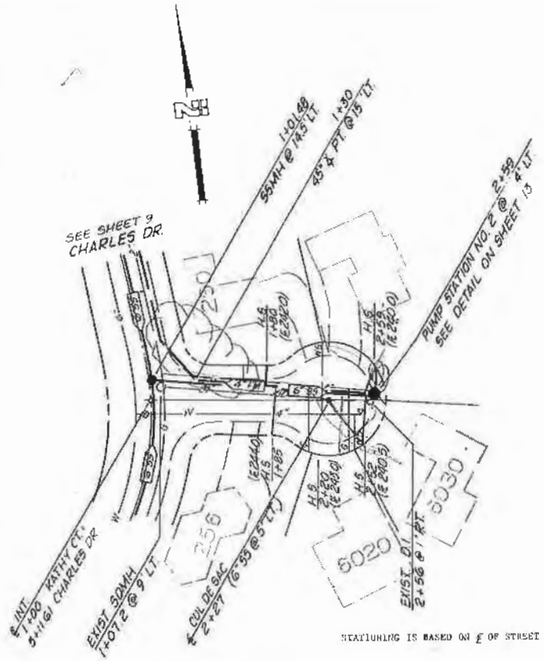

KATHY COURT

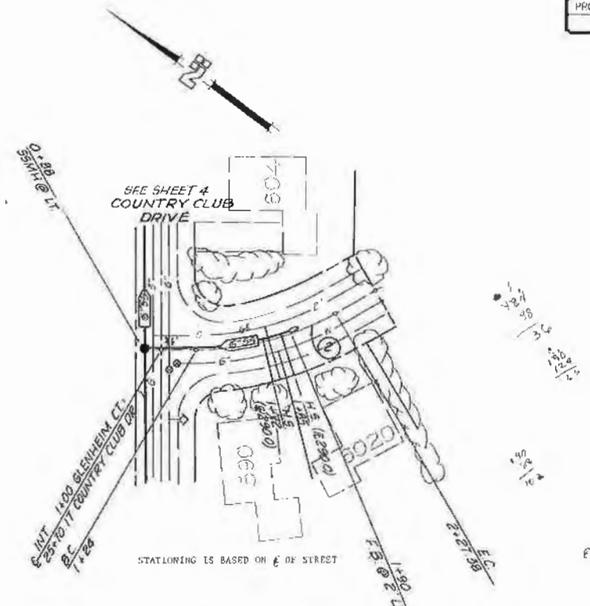

GLENHEIM COURT

℄ STREET CURVE DATA
R = 650'
(1) Δ = 9° 24' 07"
L = 105.01'
R = 200'
(2) Δ = 29° 37' 00"
L = 103.38'

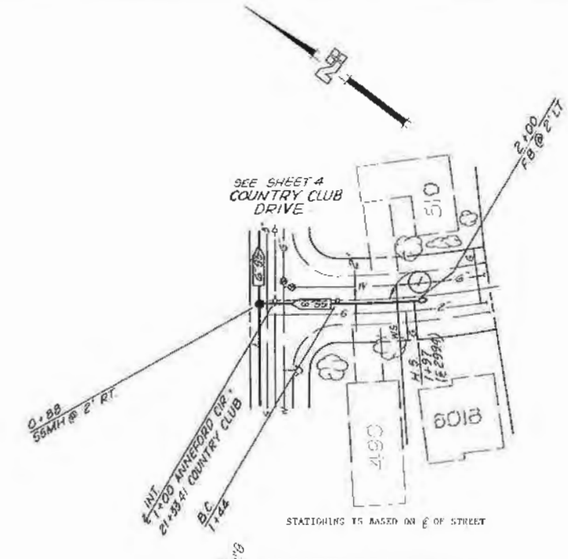

ANNEFORD CIRCLE

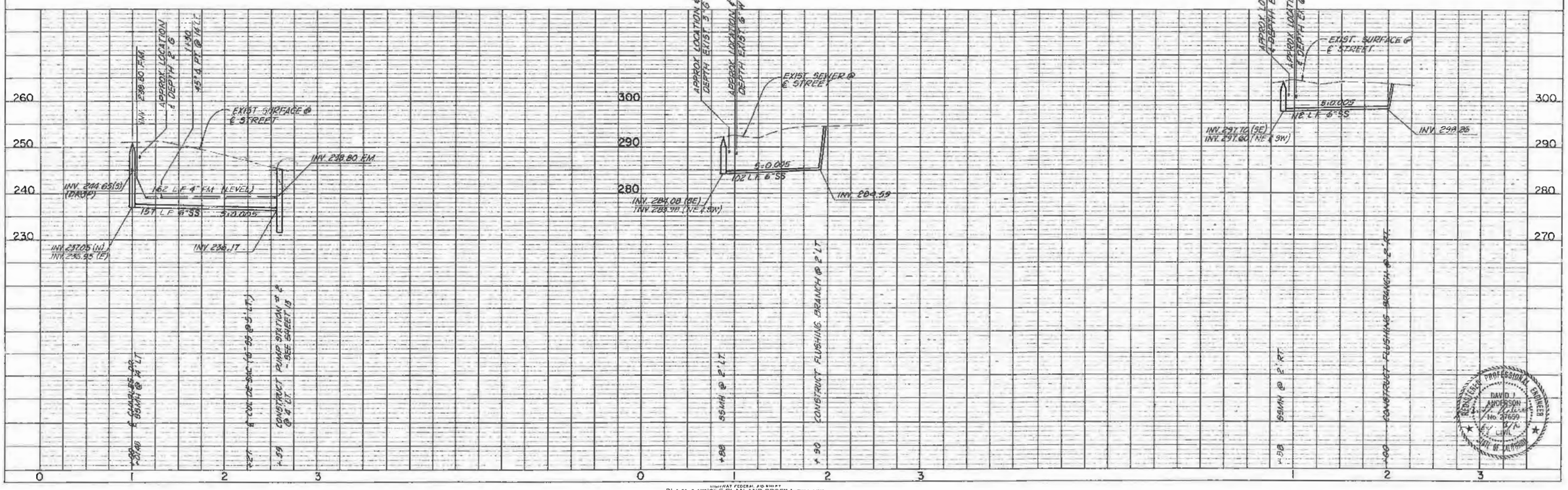

PLATE 1-SINGLE PLAN AND PROFILE-FULL LINE

GEORGE S. NOLTE AND ASSOCIATES
san jose · sacramento · san diego · walnut creek

DATE	JUNE 1985
SCALE	HORIZ: 1"=50' VERT: 1"=10'
DESIGNED	D.J.A. / MF
DRAWN	MF
CHECKED	
PROJ. ENGR.	

SAN LUIS OBISPO COUNTY SERVICE AREA NO. 18
SANITARY SEWER PROJECT

PUMP STATION NO. 1 SITE PLAN
PUMP STATION NO. 2 SITE PLAN
SEWAGE PUMPING STATION DETAIL

SHEET 12 OF 14 SHEETS
JOB NO. 2120-85-01

NOTE
CONCRETE STRENGTH TO BE 3000 P.S.I. @ 28 DAYS.
REINFORCING STEEL TO BE GRADE 60.

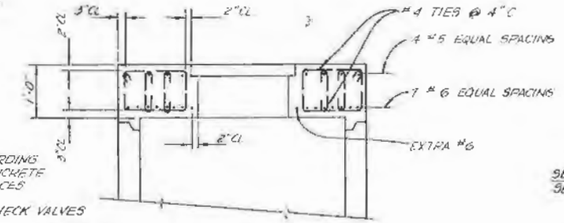

SECTION A
N.T.S.

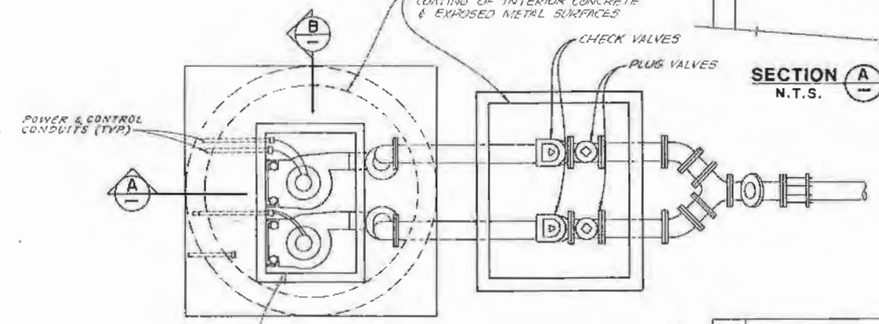

PLAN

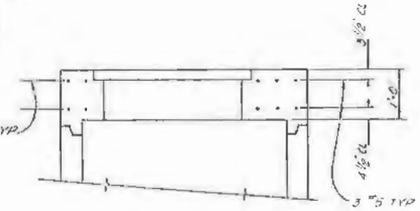

SECTION B
N.T.S.

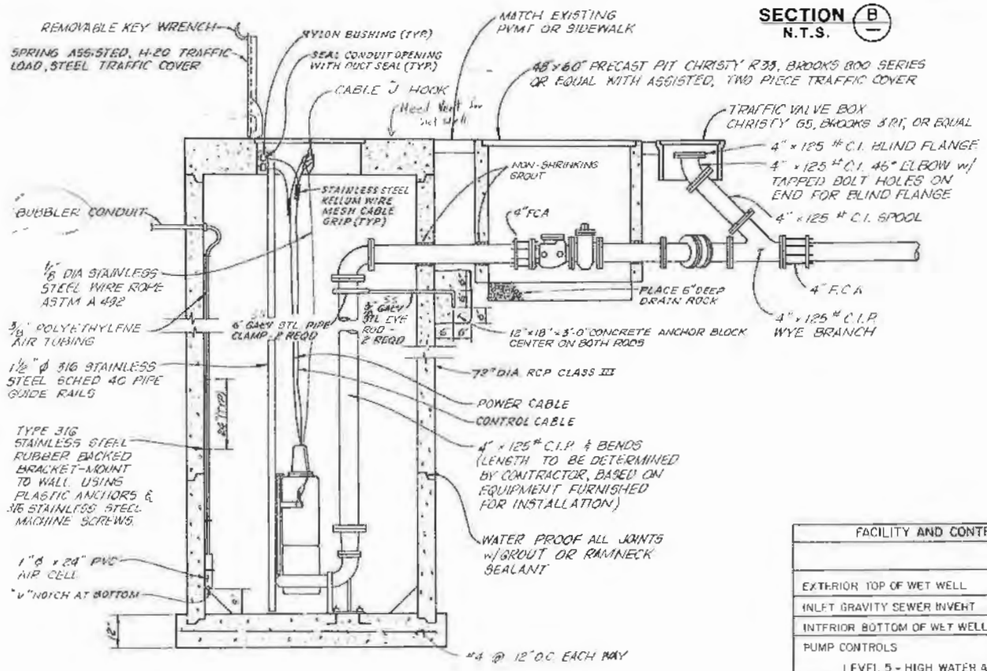

ELEVATION

SEWAGE PUMPING STATION
SCALE: 1/2"=1'-0"

FACILITY AND CONTROL ELEVATIONS (FT)		
	PUMP STATION NO. 1	PUMP STATION NO. 2
EXTERIOR TOP OF WET WELL	246.05	245.5
INLET GRAVITY SEWER INVERT	235.8	236.2
INTERIOR BOTTOM OF WET WELL	231.0	231.5
PUMP CONTROLS		
LEVEL 5 - HIGH WATER ALARM	235.5	236.0
LEVEL 4 - START LAG PUMP	235.0	235.5
LEVEL 3 - START LEAD PUMP	234.5	235.0
LEVEL 2 - STOP LAG PUMP	233.0	233.5
LEVEL 1 - STOP LEAD PUMP	232.5	233.0

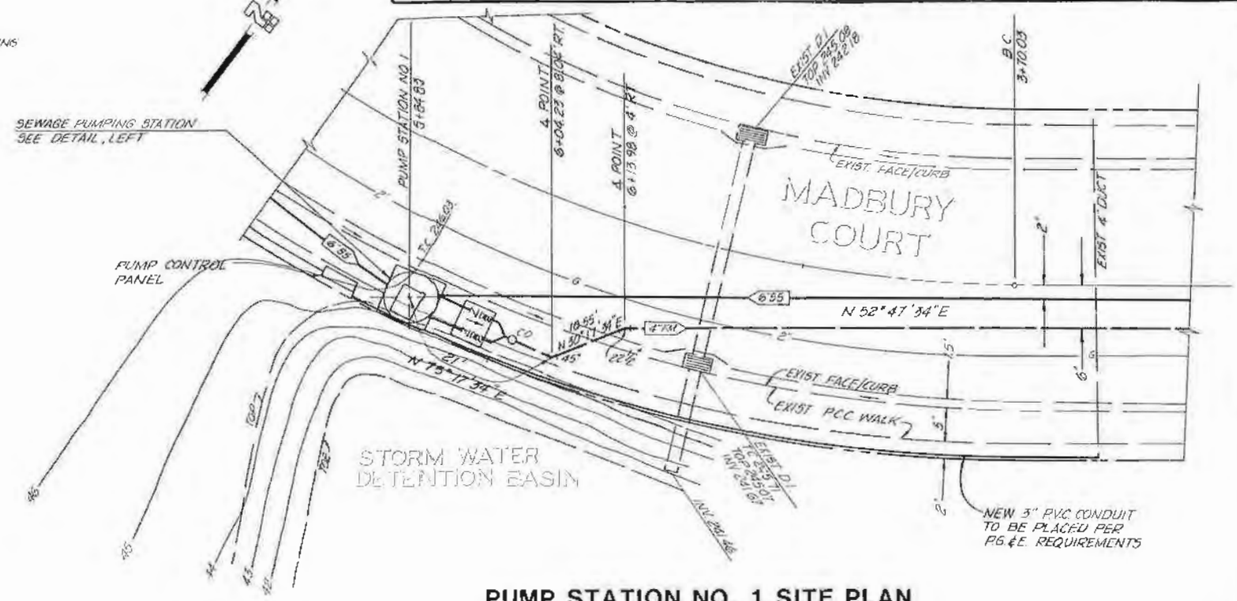

PUMP STATION NO. 1 SITE PLAN
SCALE: 1"=10'

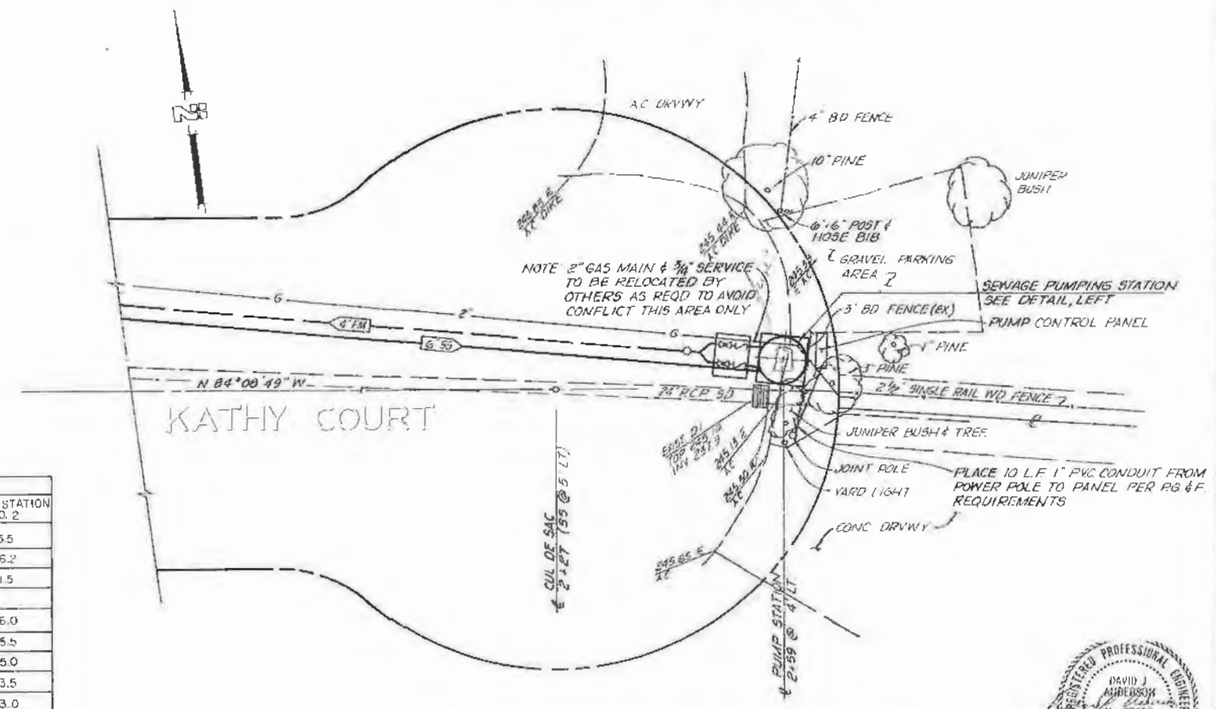

PUMP STATION NO. 2 SITE PLAN
SCALE: 1"=10'

REGISTERED PROFESSIONAL ENGINEER DAVID J. ANDERSON No 27659 CIVIL STATE OF CALIFORNIA

GEORGE S. NOLTE AND ASSOCIATES
san jose · sacramento · san diego · walnut creek

DATE: 9-12-85	SAN LUIS OBISPO COUNTY SERVICE AREA NO. 18	SHEET 13
SCALE: AS NOTED	SANITARY SEWER PROJECT	OF 14 SHEETS
DESIGNED: D.J./MF	DETAIL SHEET	JOB NO
DRAWN: J.R./MF		2120-85-01
CHECKED:		
PROJECT:		

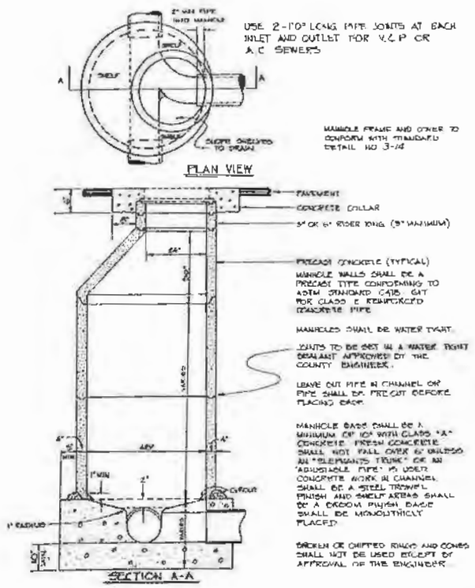

TYPICAL ECCENTRIC-CONE PRECAST CONCRETE MANHOLE (1/14)
NOT TO SCALE

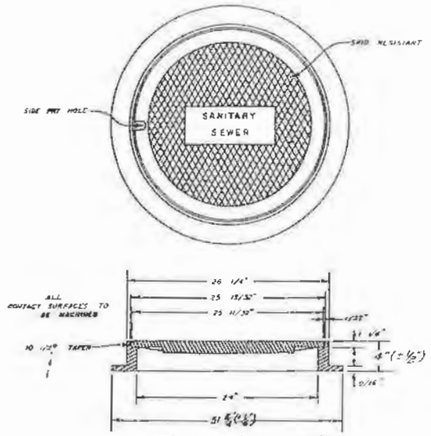

NOTE: Capacity shall be adequate for State HS-20 traffic loading

SEWER MANHOLE COVER (3/14)
NOT TO SCALE

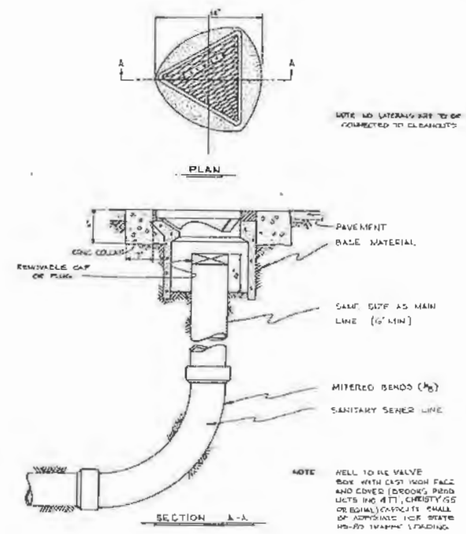

SEWER CLEANOUT (5/14)
NOT TO SCALE

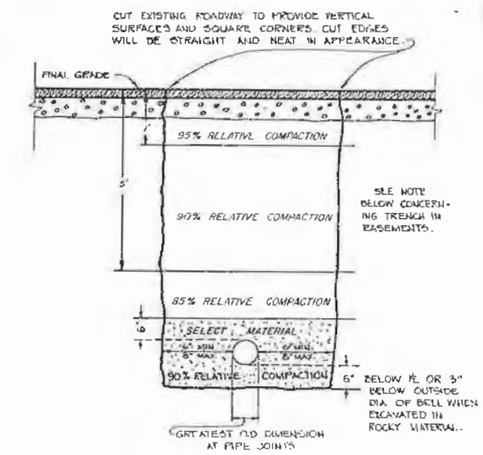

NOTE: A MINIMUM OF 85% RELATIVE COMPACTION PERMITTED IN NON-ROADWAY TRENCH WHEN NO STRUCTURES TO BE BUILT OVER TRENCH. IF STRUCTURES ARE TO BE BUILT OVER TRENCH, USE RELATIVE COMPACTIONS SHOWN ON TRENCH SECTION ABOVE.

BACKFILL REQUIREMENTS FOR M.T.S. SEWER LINES (2/14)
NOT TO SCALE

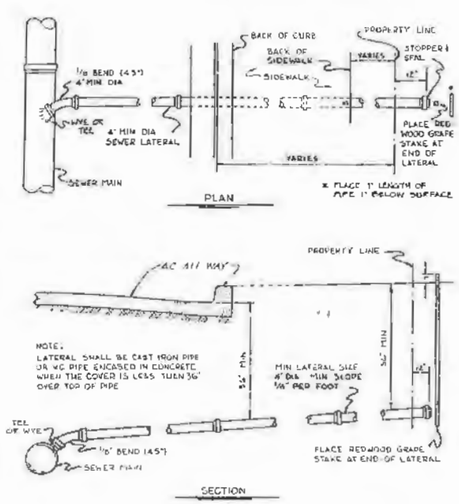

SEWER LATERAL LOCATION (4/14)
NOT TO SCALE

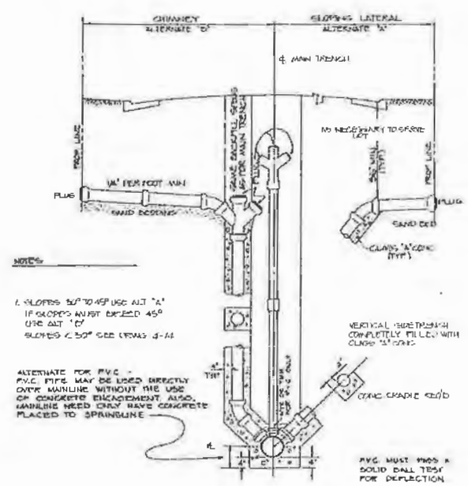

STEEP SEWER SERVICE LATERALS (6/14)
NOT TO SCALE

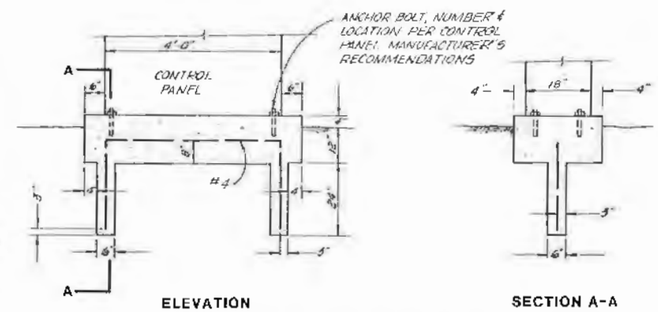

PUMP CONTROL PANEL FOUNDATION (8/14)
SCALE: 1/2" = 1'-0"

REQUIRED THRUST BLOCK BEARING AREAS (7/14)

BEND	BEARING AREA (FT^2)
11 1/4°	0.4
22 1/2°	0.7
45°	1.4

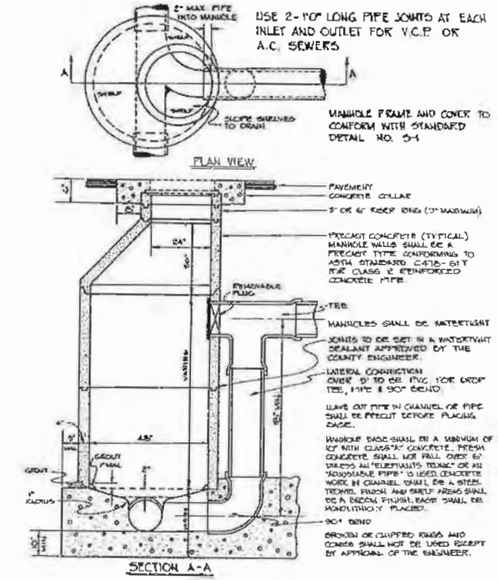

TYPICAL DROP MANHOLE (9/14)
NOT TO SCALE

REGISTERED PROFESSIONAL ENGINEER DAVID J. ANDERSON No. 37659 CIVIL STATE OF CALIFORNIA

GEORGE S. NOLTE AND ASSOCIATES
san jose · sacramento · san diego · walnut creek

DATE SEPT. 1985	SAN LUIS OBISPO COUNTY SERVICE AREA NO. 18	SHEET 14	
SCALE AS SHOWN	SANITARY SEWER PROJECT	OF 14 SHEETS	
DESIGNED R.T.			
DRAWN D.E. & R.T.	PUMP STATIONS NOS. 1 AND 2-ELECTRICAL	JOB NO. 2120-85-01	
CHECKED B.G.W.			
PROJ. ENGR. D.J.A.			

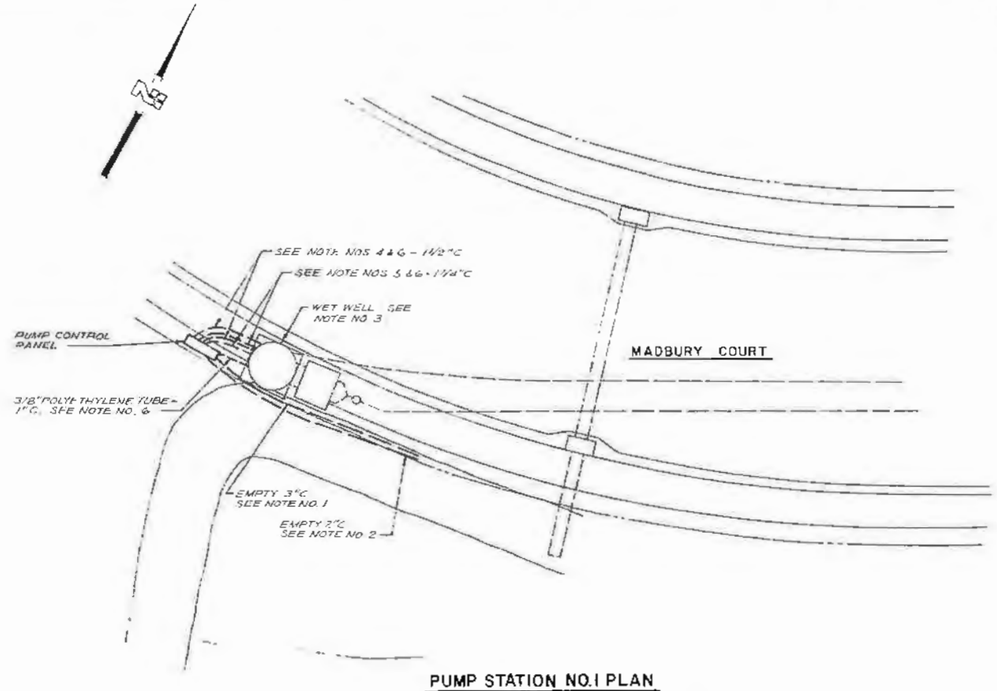

PUMP STATION NO.1 PLAN
SCALE 1"=10'

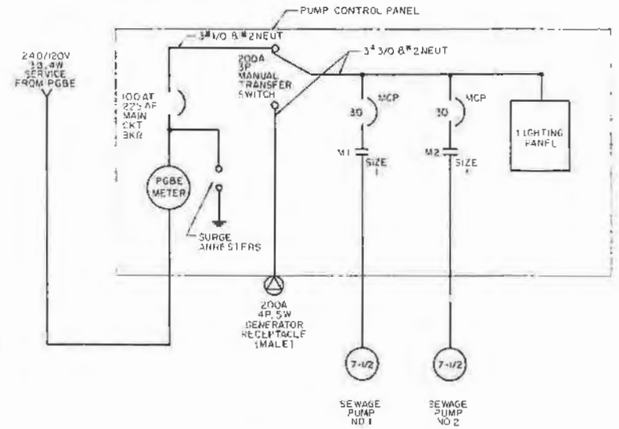

PUMP STATION NO.1

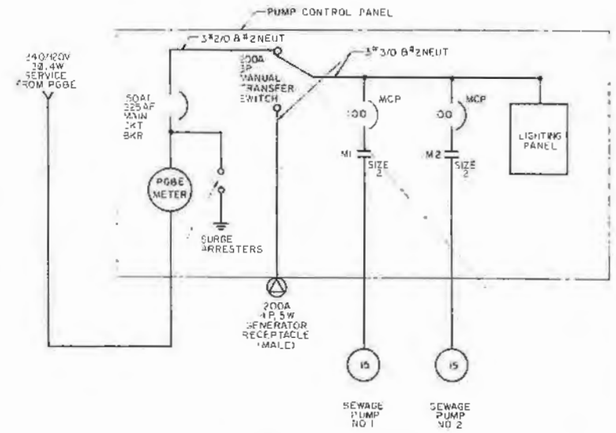

PUMP STATION NO.2

SINGLE LINE DIAGRAMS

NOTES

1. THE ELECTRICAL INSTALLATION SHALL BE IN CONFORMANCE WITH THE REQUIREMENTS OF PACIFIC GAS AND ELECTRIC COMPANY (PG&E).
2. THE ELECTRICAL INSTALLATION SHALL BE IN CONFORMANCE WITH THE REQUIREMENTS OF PACIFIC BELL.
3. THE ELECTRICAL INSTALLATION SHALL BE IN CONFORMANCE WITH THE REQUIREMENTS OF THE NATIONAL ELECTRICAL CODE FOR CLASS 1, DIVISION 1, GROUPS C AND D HAZARDOUS (CLASSIFIED) LOCATIONS.
4. INSTALL ONE SUBMERSIBLE PUMP MOTOR POWER CABLE IN THE CONDUIT FROM THE WET WELL TO THE PUMP CONTROL PANEL.
5. INSTALL A COMBINATION SUBMERSIBLE PUMP MOTOR WINDING DETECTOR AND MOISTURE DETECTOR CONTROL CABLE IN THE CONDUIT FROM THE WET WELL TO THE PUMP CONTROL.
6. INSTALL A CONDUIT SEAL FITTING AT THE CONDUIT STUB-UP IN THE PUMP CONTROL PANEL. SEAL WITH FIBER AND SEALING COMPOUND IN ACCORDANCE WITH THE MANUFACTURER'S RECOMMENDATIONS. SEE NOTE NO. 3. AT THE WET WELL CONDUIT OPENING INSTALL AN INSULATING BUSHING AND SEAL WITH DUCT SEAL.
7. UNLESS OTHERWISE INDICATED, ELECTRICAL EQUIPMENT SHOWN ON THE SINGLE LINE DIAGRAM SHALL BE OF THE 3 POLE TYPE.
8. THE PUMP CONTROL PANELS ARE FURNISHED IN SECTION 5.

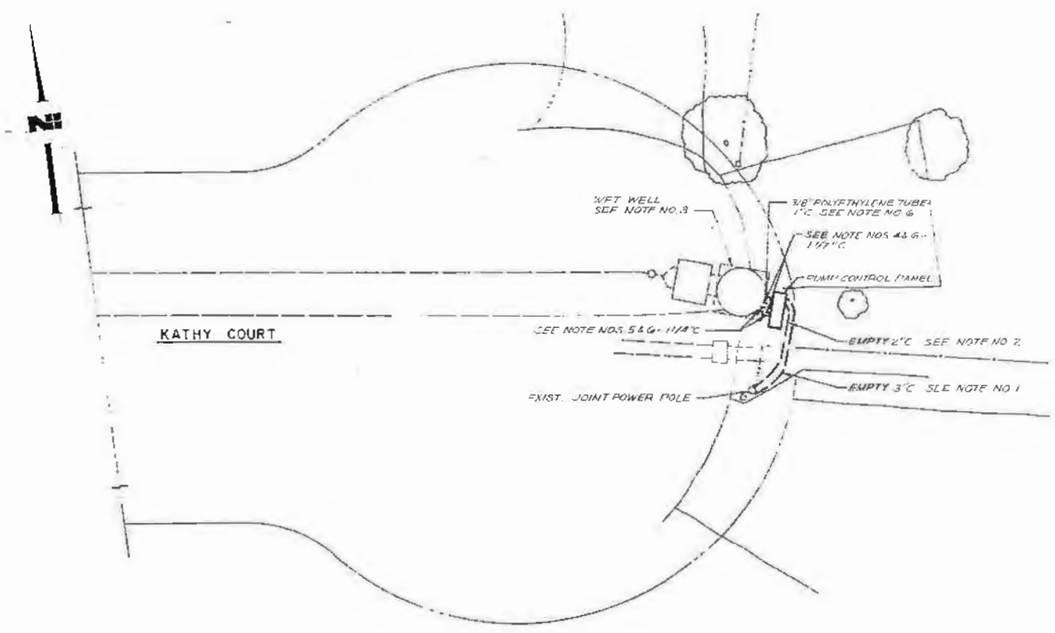

PUMP STATION NO.2 PLAN
SCALE 1"=10'

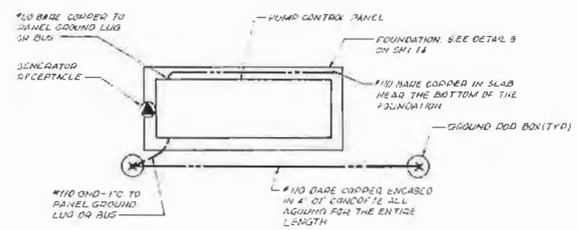

TYPICAL PUMP CONTROL PANEL GROUNDING DETAIL
NO SCALE

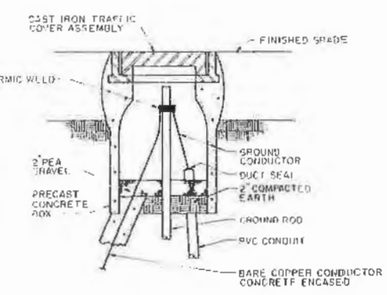

TYPICAL GROUND ROD BOX DETAIL
NO SCALE

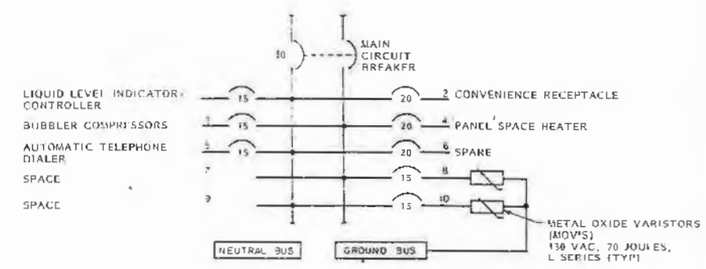

LIGHTING PANEL
240/120 VOLT, SINGLE PHASE, 3 WIRE
100 AMP COPPER BUSSING

Terada Engineering, Inc.
San Jose, California