BID SET 03-26-13
BID SET 03-26-13

ATASCADERO LIBRARY RENOVATION

6555 CAPISTRANO AVE
ATASCADERO, CA 93422

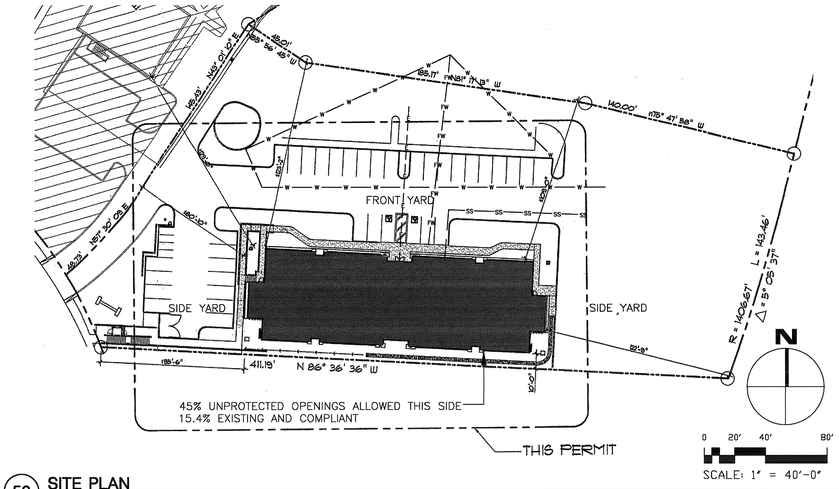

52 SITE PLAN

ALL PROPERTY LINES, EASEMENTS AND BUILDINGS, BOTH EXISTING AND PROPOSED, ARE SHOWN ON THIS SITE PLAN.

(E)/EXIST.	(E)/EXISTING	F.D.	FLOOR DRAIN	REF.	REFERENCE
@	AT	FIN. EL.	FINISHED ELEVATION	REQ.	REQUIRED
A.B.	ANCHOR BOLT	FIN. FLR.	FINISHED FLOOR	S.F.	SQUARE FEET
A.C.	ACOUSTIC	FLR.	FLOOR	S.S.	STAINLESS STEEL
A.F.F.	ABOVE FINISHED FLOOR	FT.	FEET	SCHED.	SCHEDULE
ADDT.	ADDITIVE	FTG.	FOOTING	SHT.	SHEET
ADJ.	ADJUSTABLE/ADJACENT	G.W.B.	GYPSUM WALL BOARD	SIM.	SIMILAR
ALUM.	ALUMINUM	GYP. BD.	GYPSUM BOARD	SL.	SLIDING
BD.	BOARD	HT.	HEIGHT	SOFF.	SOFFIT
BLK'G	BLOCKING			STL.	STEEL
		INFO.	INFORMATION	STRUCT.	STRUCTURAL
C.J.	CONTROL JOINT	INSUL.	INSULATION	SUSP.	SUSPENDED
C.M.U.	CONCRETE MASONRY UNIT	L	LONG	THK.	THICK
C.T.	CERAMIC TILE	M.R.	MOISTURE RESISTANCE	TOIL.	TOILET
C.T.FLR.	CERAMIC TILE FLOOR	MAX.	MAXIMUM	TYP.	TYPICAL
C.T.I.	CERAMIC TILE INSTITUTE	MFR.	MANUFACTURER	V.C.T.	VINYL COMPOSITION TILE
CAB.	CABINET	MIN.	MINIMUM	VFY.	VERIFY
CLG.	CEILING	MTL.	METAL		
CLR.	CLEAR			W/	WITH
COL.	COLOR	N/A	NOT APPLICABLE	W.C.	WATER CLOSET
CONC.	CONCRETE	N.I.C.	NOT IN CONTRACT	W.P.	WATER PROOF
CONT.	CONTINUOUS	NO./#	NUMBER	W.W.M.	WELDED WIRE MESH
CONT'D.	CONTINUED			WD.	WOOD
CT.	COAT	O/	OVER		
		O.C.	ON CENTER		
DET.	DETAIL	OPEN'G	OPENING		
DIA.	DIAMETER	P.T.D.F.	PRESSURE TREATED DOUGLAS FIR		
DIM.	DIMENSION	PART'NS	PARTITIONS		
DISP.	DISPENSER	PL.	PLATE		
DWG	DRAWING	PLAS. LAM.	PLASTIC LAMINATE		
		PLWD.	PLYWOOD		
E.J.	EXPANSION JOINT	PREP.	PREPARE		
ELEC.	ELECTRICAL	PT.	PAINT		
ENT	ENTRANCE				

53 ABBREVIATIONS

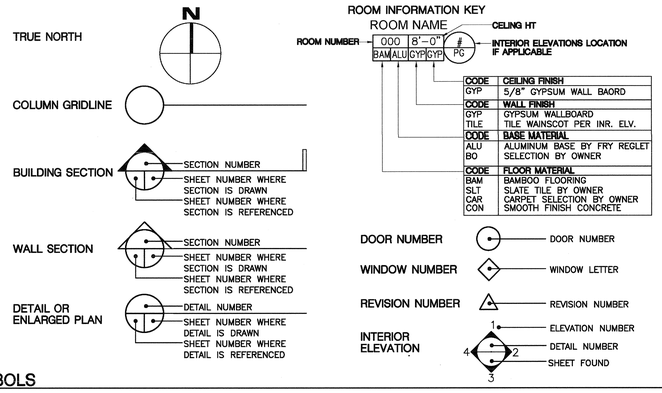

CODE	CEILING FINISH
GYP	5/8" GYPSUM WALL BAORD
CODE	**WALL FINISH**
GYP	GYPSUM WALLBOARD
TILE	TILE WAINSCOT PER INR. ELV.
CODE	**BASE MATERIAL**
ALU	ALUMINUM BASE BY FRY REGLET
BO	SELECTION BY OWNER
CODE	**FLOOR MATERIAL**
BAM	BAMBOO FLOORING
SLT	SLATE TILE BY OWNER
CAR	CARPET SELECTION BY OWNER
CON	SMOOTH FINISH CONCRETE

54 SYMBOLS

SCOPE OF WORK:

RENOVATION OF EXISTING TWO STORY WOOD FRAMED BUILDING WITH APPROVED AND PERMITTED ELEVATOR AND SERVICE UTILITES. BUILDING WAS DESIGNED AS AN OFFICE OCCUPANCY AND WILL BE RENOVATED AS A LIBRARY AND OFFICE. NO ADDITIONAL SQUARE FOOTAGE WILL BE ADDED. SPRINKLER SYSTEM IS REQUIRED AND SHALL BE A DEFERRED SUBMITTAL TO BE APPROVED BY THE BUILDING OFFICIAL.

ELEVATOR IS EXISTING PERMITTED AND OPERATIONAL.
CONTRACTOR TO VERIFY THE THAT THE ELEVATOR MEETS THE CURRENT CODE REQUIREMENTS AND PROVIDE WORK FOR COMPLIANCE.

CODE ANALYSIS 2010 CBC

OCCUPANCY:	A-3 LIBRARY, B OFFICE
STORIES	2
ELEVATOR	1 (1-HR RATED)
BUILDING CONSTRUCTION	CONVENTIONAL WOOD FRAMED
ALLOWABLE BUILDING HIEGHT:	35'-0"
BUILDING HIEGHT:	32'-0"
PARKING SPACES:	35 EXISTING
2 ACCESSIBLE PARKING SPACES REQUIRED:	3 PROVIDED WITH ONE AS A VAN ACCESSIBLE SPACE

FIRE SPRINKLERS REQ. PER CBC SECT. 439. [DEFERRED PERMIT SUBMITTAL]
SEPARATED OCCUPANCY PER CBC SECT. 508

BUILDING AREA

LOWER FLOOR:	10,950 SQ.FT. (TOTAL NEW AREA 120 SQ.FT.)	
UPPER FLOOR:	10,950 SQ.FT. (TOTAL NEW AREA 120 SQ.FT.)	
TOTAL AREA	21,900 SQ.FT.	

ALLOWABLE AREA CALCULATIONS:

	GROUP	TYPE CONSTRUCTION	STORIES	AREA
CBC TABLE 503	A-3 LIBRARY	V-A	1	11,500 PER STORY
TOTAL ALLOWABLE BUILDING AREA			2	23,000 SQ.FT. >21,900 SQ.FT.

OCCUPANCY SEPARATIONS
CBC TABLE 508.4 1-HR SEPARATION BETWEEN A-3 AND B OCCUPANCIES FOR A SPRINKLERED BUILDING

DEFERRED SUBMITTALS

THE FOLLOWING ITEMS SHALL BE SUBMITTED FOR APPROVAL TO THE ARCHITECT AND REVIEWING AGENCY FOR APPROVAL PRIOR TO FABRICATION AND CONSTRUCTION:

- FIRE SPRINKLER SYSTEM
- HIGH DENSITY STORAGE SYSTEM AND ANCHORAGE TO THE FLOOR
- BALCONY RAILINGS AND ANCHORAGE TO THE STRUCTURE

CONTRACTOR TO PROVIDE AND INSTALL PROJECT SIGN PER COUNTY STANDARDS 48X96.
ARCHITECT TO PROVIDE GRAPHICS AS APPROVED BY COUNTY.

32 PROJECT DATA

(Use wherever applicable, unless noted otherwise in the plans, California Buidling Code and specifications.)

1. Do not scale plans.
2. All construction shall conform with Title 24, 2010 CBC, 2010 Mech Code, CMC: C.P.C., CPC: C.E.C, 2010 CEC: 2010 Cal Energy Code, CEnC, and current California and Federal accessibility requirements.
3. All dimensions are to be verified in the field. Any discrepancies are to be immediately brought to the attention of the architect. Do not proceed with work without resolving discrepancies.
4. Dimensions shown shall take precedence over drawings scale or proportion. Larger scale drawings take precedence over smaller scale drawings.
5. Required sanitary facilities to be provided on the job.
6. Omissions and/or conflicts in the drawings shall not relieve the contractor from completing work which is necessary to carry out the intent of the drawing and/or complete work to standards required by code.
7. These notes indicate construction for BUILDING AND SITE unless otherwise noted or shown. Features of construction shown are typical and shall apply to all drawings unless otherwise noted or shown. Features of construction shown are typical and shall apply generally throughout to similar conditions. Unless noted otherwise all vestibules, closets, columns projections, recesses, or other adjacent areas within scheduled areas shall have finishes as scheduled for the respective spaces in which they occur. All omissions or conflicts between the various elements of the Working Drawings and/or General Notes shall be brought to the attention of the architect before proceeding with any work so involved.
8. All work, and all construction methods and materials shall comply with all provisions of the Building Codes and other rules, regulations and ordinances governing the place of the building. Building Code requirements in all cases take precedence over the drawing. It shall be the responsibility of anyone supplying labor or materials or both to bring to the attention of the architect any discrepancies or conflicts between the requirements of the code and the drawings.
9. Unless noted otherwise, all dimensions are to face of studs, concrete, or masonry.
10. Contractor shall arrange and pay for all temporary utility services and connections during construction.
11. Any changes in construction shall be accompanied by a Change Order issued by the General Contractor and approved by the owner and architect.
12. The contract drawings and specifications represent the finished improvements. Unless otherwise shown, they do not indicate method of construction. Contractor shall supervise and direct work and shall be solely responsible for all construction means, methods, techniques, sequences and procedures. Observation visits to the site shall not include inspections of the protective measures or the construction procedures required for same, which are the sole responsibility of the contractor.
13. Contractor hereby guarantees to the owner that all materials, fixtures, and equipment furnished to the project are new unless otherwise specified. Contractor also warrants that all work will be of good quality and free from any faults and defects for a period of one year after the date of substantial completion, unless a greater warranty or guarantee is required by the project specifications.
14. Anyone supplying labor and/or materials to the project shall carefully examine all subsurfaces to receive work. Any conditions detrimental to work shall be reported to the architect. Commencement of work shall imply acceptance of all subsurfaces.
15. Any material stored at the site shall be completely supported free of the ground, covered and otherwise protected to avoid damage.
16. Building contractor shall submit shop drawings for all fabricated structural components to the architect for review and approval
17. No hazardous materials will be stored/used which exceed quantities listed in CBC tables 3d, 3e.
18 Approved numbers/addresses should be provided so as to be plainly visible from the street
19 This project is not within a noise critical area (CNEL contour of 60dB) as shown on general plan.

34 GENERAL NOTES

CLIENT:	COUNTY OF SAN LUIS OBISPO – GENERAL SERVICES 1087 SANTA ROSA STREET SAN LUIS OBISPO, CA 93408 PH(805)781-4154 FAX(805)781-5215 CONTACT: CREED BRUCE cbruce@co.slo.ca.us
ARCHITECT:	RAVATT ALBRECHT & ASSOCIATES 1371 PACIFIC STREET SAN LUIS OBISPO, CA 93401 PH(805-786-4391) FAX(805-786-4792) CONTACT: MICHAEL DEMARTINI mdemartini@ravatt-albrecht.com
MECHANICAL ENGINEER:	RAVATT ALBRECHT & ASSOCIATES 3203 LIGHTNING STREET, SUITE 201 PO BOX 528 SANTA MARIA, CA 93456 PH(805-786-4391) FAX(805-786-4792) CONTACT: JIM ALBRECHT JALBRECHT@RAVATT-ALBRECHT.COM
ELECTRICAL ENGINEER:	JMPE 156 WEST ALAMAR AVENUE, SUITE B SANTA BARBARA, CA 93105 PH(805) 569-9216 FAX(805) 569-2405 CONTACT: JOHN MALONEY maloney@jmpe.net
STRUCTURAL ENGINEER:	ASHLEY & VANCE ENGINEERING 860 WALNUT ST., SUITE C SAN LUIS OBISPO, CA 93401 PH(805) 545-0010 EXT 112 CONTACT: TRUITT VANCE truitt@ashleyvance.com
CIVIL ENGINEER:	GROUND UP DESIGN & CM P.O. BOX 1583 PASO ROBLES, CA 93447 PH(805) 227-4159 CONTACT: STACIE GLEIM staciegleim@earthlink.net
COST ESTIMATOR:	AC&E COST ESTIMATING SERVICES 3203 LIGHTNING STREET, SUITE 114 SANTA MARIA, CA 93455 PH(805) 349-0049 FAX(805) 349-0089 CONTACT: MIKE LEWIS acesupp@verizon.net

23 PROJECT TEAM

STRUCTURAL
STRUCTURAL STEEL:
Continuous special inspection of structural welding is required by an inspector pre-qualified by the Building Department. The following exceptions are permitted for welds not in special moment-resisting frames:
(a) Welding performed in an approved fabricator's shop in accordance with 2010 CBC Section 1704.2. To be verified by County.
(b) The inspector need not be continuously present during welding of the following items, provided the materials, welding procedures, and welders qualifications are verified prior to the start of work; Periodic inspections are made of work in progress; and visual inspection of all completed welds is made prior to shipment:
i. Single-pass fillet welds not exceeding 5/16"
ii. Floor and roof steel deck welding
iii. Welding studs (for nailers, diaphragms or composite deck systems)
iv. Welding light gauge cold-formed framing members (studs, joists, etc.)
v. Welding of stairs and railing systems.

SPECIAL INSPECTION IS REQ. FOR SUSPENDED CEILING AND ANCHORAGE FOR SEISMIC DESIGN CAT. D.

ANCHORAGE OF STORAGE RACKS

WOOD SHEARWALLS

24 SPECIAL INSPECTIONS AND TESTING

REFER TO PROJECT MANUAL WHICH INCLUDES:
1. INSTRUCTIONS TO BIDDERS
2. TECHNICAL SPECIFICATIONS
3. SOILS REPORTS
4. EXISTING RECORD DRAWINGS OF SHELL BUILDING

BID ALT #1: PREPARE AND PAINT BUILDING EXTERIOR. 2 COATS, 25 YEAR WARRANTY MIN.

11 BIDDING INFORMATION

SHEET	DESCRIPTION
T1	TITLE SHEET
T2	ADA COMPLIANCE
C1.0	LEGEND AND GENERAL NOTES
C2.0	DEMOLITION AND REMOVAL PLAN
C3.0	SITE, GRADING, AND DRAINAGE PLAN
C4.0	CONSTRUCTION DETAILS
C5.0	EROSION CONTROL PLAN
C6.0	EROSION CONTROL, NOTES AND DETAILS
C7.0	EROSION CONTROL DETAILS
A1.1	SITE PLAN, FIRE PROTECTION, FIRST STORY
A1.1.5	PARTIAL SITE PLAN, PATH OF TRAVEL
A1.2	FIRE PROTECTION, EXITING/SIGNAGE PLAN, SECOND STORY
A1.3	DEMOLITION PLAN, FIRST STORY
A1.4	DEMOLITION PLAN, SECOND STORY
A1.5	DEMOLITION PLAN, ROOF
A2.1	FLOOR PLAN, FIRST STORY
A2.2	FLOOR PLAN, SECOND STORY
A3.1	REFLECTED CEILING PLAN, FIRST STORY
A3.2	REFLECTED CEILING PLAN, SECOND STORY
A3.3	ROOF PLAN
A4.1	EXTERIOR ELEVATIONS
A5.1	BUILDING SECTIONS
A6.1	FINISH PLAN, FIRST STORY
A6.2	RESTROOM FINISH PLAN AND SCHEDULE, FIRST STORY
A6.3	FINISH PLAN, SECOND STORY
A6.4	RESTROOM FINISH PLAN AND SCHEDULE, SECOND STORY
A6.5	INTERIOR ELEVATION, FIRST STORY
A6.6	INTERIOR ELEVATION, FIRST STORY
A6.7	INTERIOR ELEVATION, FIRST STORY
A6.8	INTERIOR ELEVATION, SECOND STORY, COMMUNITY
A6.9	INTERIOR ELEVATION, SECOND STORY, COMMUNITY/ONESTOP
A7.0	INTERIOR ELEVATION, SECOND STORY, ONESTOP
A7.1	FURNITURE PLAN, FIRST STORY
A7.2	FURNITURE PLAN, SECOND STORY
A7.3	DOOR AND WINDOW SCHEDULE AND DETAILS
A8.1	ARCHITECTURAL DETAILS
A8.2	ARCHITECTURAL DETAILS
A8.3	ARCHITECTURAL DETAILS
A8.4	CGBSC COMPLIANCE DOCUMENTATION
S-1.0	STRUCTURAL TITLE SHEET
S-1.1	STRUCTURAL SPECIFICATIONS
S-2	FOUNDATION PLAN
S-3	FLOOR FRAMING PLAN
S-4	ROOF FRAMING PLAN
S-5	STRUCTURAL DETAILS
S-6	STRUCTURAL DETAILS
S-7	STRUCTURAL DETAILS
M1-0	MECHANICAL NOTES, SYMBOLS, AND ABBREVIATIONS
M1-1	MECHANICAL SCHEDULES
M2-0	MECHANICAL FLOOR PLANS
M2-1	MECHANICAL ROOF PLAN
M2-2	MECHANICAL SECTIONS
M3-0	MECHANICAL ZONE PLANS
M3-1	MECHANICAL CONTROLS
M4-0	MECHANICAL DETAILS
T-24-1	TITLE 24 DOCUMENTATION
T-24-2	TITLE 24 DOCUMENTATION
T-24-3	TITLE 24 DOCUMENTATION
T-24-4	TITLE 24 DOCUMENTATION
P1-0	PLUMBING NOTES, LEGENDS, SCHEDULES, & ABBREVIATIONS
P2-0	PLUMBING FLOOR PLANS
P2-1	ENLARGED PLUMBING FLOOR PLANS
P3-0	PLUMBING DIAGRAMS
P4-0	PLUMBING DETAILS
E-1	GENERAL NOTES, SYMBOLS, SCHEDULES, & DETAILS
E-2	FIRST STORY POWER PLAN
E-3	FIRST STORY LIGHTING PLAN
E-4	SECOND STORY POWER PLAN
E-5	SECOND STORY LIGHTING PLAN
E-6	LIGHTING COMPLIANCE FORMS
E-7	PANEL SCHEDULES
EL-1	SITE LIGHTING PLAN
EL-2	EXISTING SITE LIGHTING PHOTOMETRIC PLAN

14 SHEET INDEX

California Code Check Approval
Plan Review Code Compliance
These plans have been reviewed per the 2010 CBC. Approval of these plans and specifications shall not be held to permit the violation of any provisions of city or county ordinances, federal or state laws.
Reviewed by: [illegible]
Date: 11 Dec 12

COUNTY OF SAN LUIS OBISPO
DEPARTMENT OF GENERAL SERVICES
1087 SANTA ROSA STREET
SAN LUIS OBISPO, CA 93408
PHONE 8057815200

RAVATT ALBRECHT & ASSOCIATES, INC.
ARCHITECTURE: INTERIORS
GREG RAVATT, AIA
MECHANICAL, ELECTRICAL
JIM ALBRECHT, PE
1371 PACIFIC STREET
SAN LUIS OBISPO, CA 93401
PHONE: 805/786-4391 SLO
805/928-3202 SM
FAX: 805/786-4792 SLO
805/928-0990 SM
EMAIL: OFFICE@RAVATT-ALBRECHT.COM

REGISTERED ARCHITECT
GREGORY ALLEN RAVATT
C-15,000
08/30/13
STATE OF CALIFORNIA

No.	Revision	Date
	PLANCHECK REV1	9.26.12
	PLANCHECK REV2	10.24.12
	PLANCHECK REV3	11.19.12

County Facility:
ATASCADERO LIBRARY RENOVATION
6555 CAPISTRANO AVE.
ATASCADERO CA 93422

Project Manager: M. DEMARTINI
Checked By: MID
Client Approval:
Date: 08/20/2012

CONTRACTOR SHALL VERIFY ALL DIMENSIONS AND EXISTING CONDITIONS PRIOR TO COMMENCING WORK. REPORT ANY DISCREPANCIES TO COUNTY PROJECT COORDINATOR OR TO THE PROJECT ARCHITECT.

Project Title : ATASCADERO LIBRARY RENOVATION
6555 CAPISTRANO AVE
ATASCADERO, CA 93422

Sheet Title : TITLE SHEET

Sheet Number
T1
of Sheets

PROJECT No. 417

FILE No.

BIDDING SET 11-19-12

BID SET 03-26-13
BIDDING SET 11-19-12
BID SET 03-26-13

BID SET 03-26-13
BID SET 03-26-13

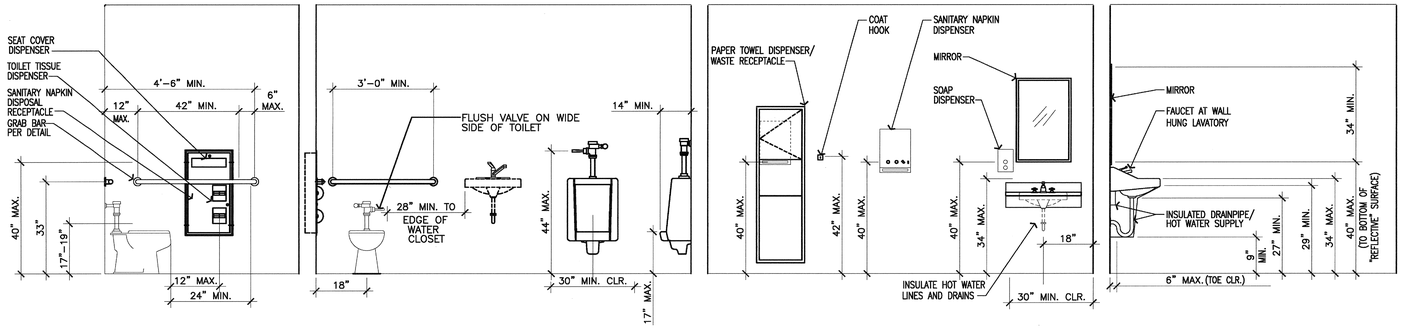

TYPICAL RESTROOM ACCESSORY M OUNTING HEIGHTS

SCALE: N.T.S. (21 / T-2)

NOTES:

1. REGARDLESS OF STALL CONFIGURATION, A 48" LONG MINIMUM CLEARANCE FLOOR SPACE SHALL BE PROVIDED IN FRONT OF THE WATER CLOSET.
2. INTERIOR DIMENSIONS OF SINGLE ACCOMMODATION TOILET ROOMS SHALL INCLUDE A CLEAR FLOOR SPACE OF AT LEAST 60" IN DIAMETER OR A T-SHAPED CLEAR SPACE. NO DOOR MAY ENCROACH INTO THIS REQUIRED CLEAR SPACE BY MORE THAN 12".
3. SIDE GRAB BARS IN SINGLE ACCOMMODATION TOILET ROOMS MUST BE INSTALLED SUCH THAT THE FRONT END OF THE BAR IS LOCATED A MINIMUM OF 54" FROM THE BACK WALL.

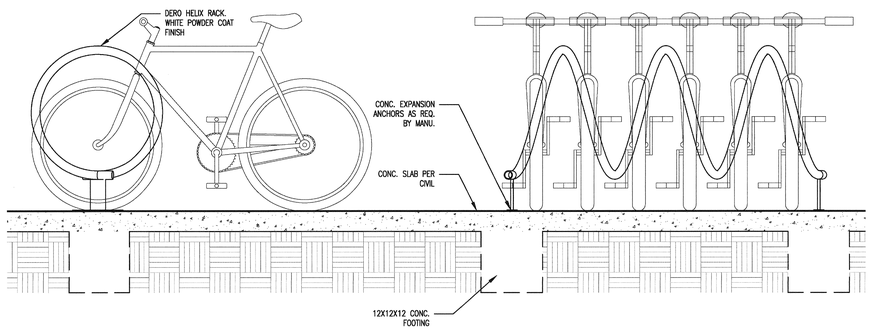

BICYCLE PARKING RACK

SCALE: 1"=1'-0" (42 / T-2)

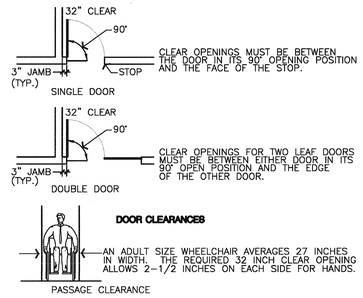

DOOR CLEARANCE

SCALE: N.T.S. (32 / T-2)

DOOR MOUNTED SIGNAGE:

1. THE COLOR AND CONTRAST OF THE SIGN DISTINCTIVELY CONTRASTS WITH THE COLOR & CONTRAST OF THE DOOR.
2. IMAGE AND LETTERS SHALL BE ENGRAVED A MINIMUM OF 1/32" INTO THE PLAQUE.
3. SIGNS ARE CENTERED ON THE DOOR 60" FROM THE FINISHED FLOOR.

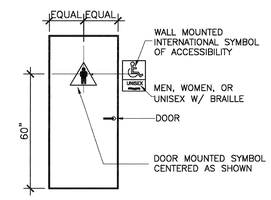

WALL MOUNTED SIGNAGE:

1. THE INTERNATIONAL SYMBOL OF ACCESSIBILITY IS INSTALLED ON THE WALL ADJACENT TO THE LATCH SIDE OF THE DOOR. THE BORDER DIMENSION OF THIS PICTOGRAM SHALL BE A MINIMUM OF 6" IN HEIGHT. NOTE: WHERE THERE IS NO WALL SPACE ON THE LATCH SIDE, INCLUDING AT DOUBLE LEAF DOORS, SIGNS SHALL BE PLACED ON THE NEAREST ADJACENT WALL, PREFERABLY ON THE RIGHT. DO NOT INSTALL TYPE 'A' ON AMBULATORY ACCESSIBLE ONLY RESTROOMS.
2. VERBAL DESCRIPTION AS TO REST ROOM USAGE ("MEN", "WOMEN", OR "UNISEX"), IS PLACED DIRECTLY BELOW THE SYMBOL OF ACCESSIBILITY.
3. THE CHARACTERS AND BACKGROUND OF THE SIGN ARE EGGSHELL, MATTE, OR OTHER NON-GLARE FINISH AND THE COLOR AND CONTRAST OF THE SIGN DISTINCTIVELY CONTRAST W/ THE COLOR & CONTRAST OF THE WALL. NOTE: THE REQUIRED COLOR OF THE SYMBOL OF ACCESSIBILITY CONSIST OF A WHITE FIGURE ON A BLUE BACKGROUND. HOWEVER THE APPROPRIATE ENFORCEMENT AGENCY MAY APPROVE SPECIAL SIGNS TO COMPLIMENT DÉCOR WHEN SUCH SIGNS PROVIDE ADEQUATE DIRECTION TO INDIVIDUALS WITH DISABILITIES.
4. SIGNS ARE CENTERED ON THE WALL 60" FROM THE FINISHED FLOOR.
5. LETTERS AND NUMBERS ARE RAISED 1/32", ARE SANS-SERIF UPPERCASE CHARACTERS AND ARE ACCOMPANIED BY GRADE 2 BRAILLE. CHARACTERS ARE A MINIMUM 5/8" HIGH AND A MAXIMUM OF 2" HIGH. BY GRADE 2 BRAILLE.
6. MOUNTING LOCATION ALLOWS A PERSON TO APPROACH WITHIN 3" OF THE SIGNAGE WITHOUT ENCOUNTERING PROTRUDING OBJECTS OR STANDING WITHIN THE SWING OF A DOOR.

INTERNATIONAL SYMBOLS/CHARACTERS

24. THE "INTERNATIONAL SYMBOL OF ACCESSIBILITY" SHALL BE SPECIFIED AS THE STANDARD USED TO IDENTIFY FACILITIES THAT ARE ACCESSIBLE TO AND USABLE BY PHYSICALLY DISABLED PERSONS. THE SYMBOL SHALL CONSIST OF A WHITE FIGURE ON A BLUE BACKGROUND.
25. THE CONTRACTED BRAILLE 2 SHALL BE SPECIFIED. DOTS TO BE 1/10" ON CENTER IN EACH CELL WITH 2/10" SPACE BETWEEN CELLS. DOTS SHALL BE RAISED A MINIMUM OF 1/40" ABOVE BACKGROUND. NUMBERS & LETTERS SHALL HAVE A WIDTH-TO-HEIGHT RATIO OF BETWEEN 3:5 AND 1:1 AND A STROKE WIDTH TO HGT. RATIO BETWEEN 1:5 AND 1:10.
26. CHARACTERS, NUMBERS AND SYMBOLS SHALL CONTRAST WITH THEIR BACKGROUND, EITHER LIGHT COLORS ON A DARK BACKGROUND OR DARK ON LIGHT. THEY SHALL BE SIZED ACCORDING TO THE VIEWING DISTANCE FROM WHICH THEY ARE TO BE READ. THE MINIMUM HEIGHT IS MEASURED USING AN UPPER CASE "X". (LOWER CASE CHARACTERS ARE PERMITTED.) LETTERS AND NUMBERS SHALL BE RAISED 1/32" MIN. AND SHALL BE SANS-SERIF. UPPERCASE CHARACTERS ACCOMPANIED BY GRADE 2 BRAILLE. RAISED CHARACTERS OR SYMBOLS SHALL BE A MINIMUM OF 5/8" HIGH. PICTO- GRAMS SHALL BE ACCOMPANIED BY THE EQUIV. VERBAL DESCRIPTION PLACED DIRECTLY BELOW THE PICTOGRAM TO BE A MINIMUM OF 6" HIGH.
27. ALL ACCESSIBLE ENTRANCES SHALL BE IDENTIFIED BY A SIGN AND WITH ADDITIONAL SIGNS AS REQUIRED, TO BE VISIBLE TO PERSONS ALONG APPROACHING PEDESTRIAN WAYS. WHERE PERMANENT IDENTIFICATION IS PROVIDED FOR ROOMS AND SPACES, RAISED LETTERS SHALL BE PROVIDED AND ACCOMPANIED BY APPROVED BRAILLE. MOUNTING HEIGHT SHALL BE 60" ABOVE FINISH FLOOR TO THE CENTER OF THE SIGN. LOCATION SHALL BE DETERMINED SO THAT A PERSON MAY APPROACH WITHIN 3" OF SINGE WITHOUT ENCOUNTERING PROTRUDING OBJECTS OR STANDING WITHIN DOOR SWING. INSTALL ON WALL ADJ. TO OUTSIDE LATCH SIDE OF DOOR.

ADA SIGNAGE

SCALE: N.T.S. (11 / T-2)

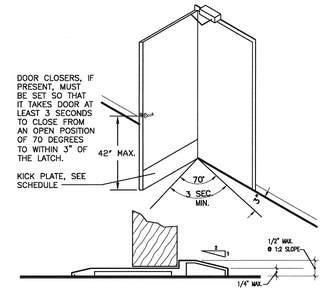

ACCESSIBLE ENTRY DOOR AND THRESHOLD

SCALE: 1"=3'-0" (12 / T-2)

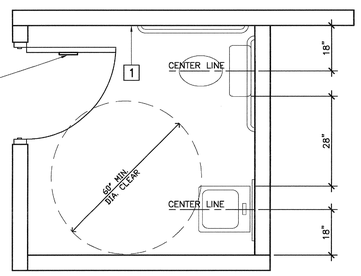

NOTES:

1. REFER TO ENLARGED RESTROOM PLAN FOR SPECIFIC DETAILS AND FIXTURE SELECTION
2. REFER TO PLUMBING SHEETS FOR PLUMBING FIXTURE SELECTION.
3. SEE DETAIL 32/T2 FOR TYPICAL RESTROOM ACCESSORY MOUNTING HEIGHTS.
4. KEYNOTES ARE TYPICAL.
5. DOOR AND WALL SIGNAGE PER DETAIL 42 AND 34/T2
6. CONTROLS FOR WATER CLOSET FLUSH VALVES SHALL BE MOUNTED ON THE WIDE SIDE OF TOILET AREAS. NOTE 29, 24/T2

SYMBOL KEYNOTES

1. SEE FINISH PLAN FOR FINISHES
2. DOOR MOUNTED SIGNAGE

TYPICAL ADA SINGLE USE RESTROOM

SCALE: 1/2"=1'-0" (53 / T-2)

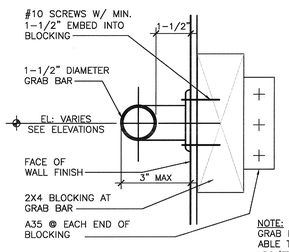

NOTE: STAINLESS STEEL GRAB BARS, SHALL BE ABLE TO WITHSTAND 250 LBS/FT IN BENDING, SHEAR, AND TENSION.

TYPICAL GRAB BAR ANCHORING

SCALE: 3"=1'-0" (43 / T-2)

TOILET FACILITIES

28. PROVIDE SUFFICIENT SPACE WITHIN THE TOILET ROOM FOR WHEELCHAIR MEASURING 30"X48" TO ENTER THE ROOM AND PERMIT THE DOOR TO CLOSE. PROVIDE 60" DIAMETER CLR. FLOOR SPACE. PROVIDE A MIN. 28" WIDE CLR. SPACE FROM A FIXTURE OR A MIN. 32" SPACE FROM A WALL TO ONE SIDE OF THE WATER CLOSET AND 18" FROM WATER CLOSET CENTER LINE TO A WALL ON THE OTHER SIDE OF THE WATER CLOSET. PROVIDE 48" CLR. IN FRONT OF WATER CLOSET. MAINTAIN 18" FROM A WALL TO LAV. CENTERLINE, AND FROM A WALL TO DOOR LATCH. MIN. CLR. WIDTH OF ACCESSIBLE ROUTE SHALL BE 36".
29. DETAIL GRAB BARS, MIRRORS, TOWEL, SANITARY NAPKIN, WASTE DISPOSAL, WATER CLOSET SEATS, URINALS, LAVS, HOT WATER PIPING, ETC. FIXTURES IN CONFORMANCE WITH TITLE 24 ACCESSIBILITY STANDARDS. DETAIL APPROVED GRAB BARS ON BOTH SIDES OR ONE SIDE AND BACK OF WATER CLOSET SECURELY ATTACHED AND MAX. 33" ABOVE FINISH FLOOR. 1-1/4" MIN. TO 1-1/2" MAX. OUTSIDE DIA. W/ 1-1/2" SPACE BETWEEN WALL AND BAR. DETAIL MIRRORS TO BE SET WITH BOTTOM EDGE NO MORE THAN 40" ABOVE FINISH FLOOR. DETAIL TOWEL, SANITARY NAPKIN, WASTE DISPENSING, COIN OPENINGS, ETC. W/ OPENINGS MAX. 40" ABOVE FIN. FLR. DETAIL TOILET TISSUE DISPENSERS TO BE LOCATED ON THE WALL WITHIN 12" OF TOILET SEAT FRONT EDGE. DETAIL WATER CLOSET SEAT TO BE MIN. 17" TO MAX. 19" ABOVE FIN. FLR. DETAIL ELONGATED RIM URINAL TO BE 17" MAX. ABOVE FIN. FLR. DETAIL 29" H X 30"W X 8" DEEP CLR. SPACE UNDER LAV. DETAIL 9" H X 17" DEEP TOE SPACE. INSULATE HOT WATER & DRAIN PIPING UNDER LAV. FAUCET CONTROLS AND OPERATION MECHANISMS SHALL BE OPERABLE WITH ONE HAND AND SHALL NOT REQUIRE TIGHT GRASPING, PINCHING OR TWISTING OF THE WRIST. CONTROLS FOR THE FLUSH VALVE SHALL BE MOUNTED ON THE WIDE SIDE OF TOILIET AREAS, NO MORE THAN 44 INCHES ABOVE THE FLOOR. THE FORCE REQUIRED TO ACTIVATE CONTROLS SHALL BE MAX. 5 lbf. LEVER-OPERATED, PUSH-TYPE AND ELECTRONICALLY-CONTROLLED MECHANISMS ARE ACCEPTABLE DESIGNS. SELF-CLOSING VALVES AE ALLOWED IF THE FAUCET REMAINS OPEN AT LEAST 10 SECONDS.

ADA TOILET FACILITY NOTES

SCALE: N.T.S. (33 / T-2)

TYPICAL GRAB BAR ANCHORING

SCALE: NTS (23 / T-2)

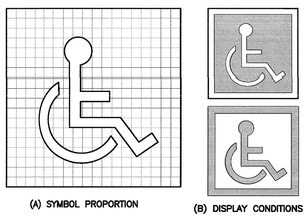

(A) SYMBOL PROPORTION

(B) DISPLAY CONDITIONS

THE INTERNATIONAL SYMBOL OF ACCESSIBILITY IS REQUIRED ON:

1. PARKING SPACES DESIGNATED AS RESERVED FOR INDIVIDUALS WITH DISABILITIES.
3. ACCESSIBLE PASSENGER LOADING ZONE.
ACCESSIBLE ENTRANCES (INACCESSIBLE ENTRANCES SHALL HAVE DIRECTIONAL
4. SIGNAGE TO INDICATE THE ROUTE TO THE NEAREST ACCESSIBLE ENTRANCE).
MOUNT 60" FROM FINISH GRADE.
ACCESSIBLE TOILET AND BATHING FACILITIES.

INTERNATIONAL SYMBOL OF ACCESSIBLITY

SCALE: 1"=1'-0" (54 / T-2)

NOTES:

1. SIGN TO BE CENTERED AT THE INTERIOR END OF PARKING SPACE.
2. AREA OF SIGN TO BE A MIN. OF 70 SQ. IN.
3. DESIGNATE FOR "VAN ACCESSIBLE" WHERE APPROPRIATE.

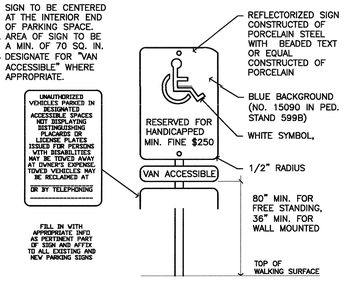

PARKING SPACE SIGNAGE

SCALE: 1"=1'-0" (44 / T-2)

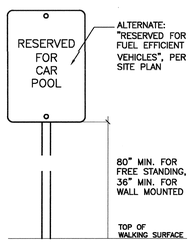

CARPOOL/FUEL EFF. VEHICLE SIGNAGE

SCALE: 3/16"=1'-0" (34 / T-2)

KITCHEN FACILITIES

31. KITCHEN SINK FAUCET CONTROLS AND OPERATING MECHANISM SHALL BE OPERABLE WITH ONE HAND AND SHALL NOT REQUIRE TIGHT GRASPING, PINCHING OR TWISTING OF THE WRIST. THE FORCE REQUIRED TO ACTIVATE CONTROLS SHALL BE NO GREATER THAN 5 lbf. LOWER SHELVING AND/OR DRAWER SPACE SHALL BE PROVIDED IN THE KITCHEN AT A HEIGHT OF NO MORE THAN 48 INCHES A.F.F. BASE CABINETS DIRECTLY UNDER KITCHEN SINK COUNTER AREA, INCLUDING TOE-BOARD AND SHELVING, SHALL BE REMOVABLE. FINISHED FLOORING SHALL BE PROVIDED ON THE FLOOR BENEATH THE COUNTERTOP.
32. A MIN. OF 30 LINEAR INCHES OF COUNTERTHP SHALL BE PROVIDED FOR THE KITCHEN SINK, AND A MIN OF 30 LINEAR INCHES OF COUNTER SHALL BE PROVIDED FOR A WORK SURFACE. THE SINK AND WORK SURFACE MAY BE A SINGLE INTEGRAL UNIT, OR BE SEPARATE COMPONETS. THE WORK SURFACE SHALL BE STONE, CULTURED STONE OR TILED COUNTERTOPS.
33. LOWER SHELVING AND/OR DRAWER SPACE SHALL BE PROVIDED IN THE KITCHEN W/ MAX. HEIGHT OF 48 INCHES.
34. BASE CABINETS DIRECTLY UNDER KITCHEN SINK COUNTER AREA, INCLUDING TOEBOARD AND SHELVING SHALL BE REMOVABLE WITHOUT THE USE OF SPECIALIZED TOOLS OR SPECIALIZED KNOWLEDGE TO PROVIDE CLEARANCE FOR A WHEELCHAIR. FINISHED FLOORING SHALL BE PROVIDED ON THE FLOOR BENEATH THE COUNTERTOP.

ADA KITCHEN NOTES

SCALE: N.T.S. (24 / T-2)

ACCESSIBLE EXIT DOORS/CORRIDORS/STAIRS

15. RAMP, ELEVATOR OR OTHER APPROVED ACCESS SHALL BE PROV. TO ALL ACCESS. ENTRANCES, EXITS AND OTHER AREAS.
16. ALL REQ'D ENTRANCE/EXIT/INT. DOORS SHALL BE ACCESSIBLE AND COMPLY AS FOLLOWS: PROVIDE A MIN. 32" CLR. OPENING WHEN DOOR IS IN FULLY OPEN POSITION (90° TO OPENING). SPECIFY APPROVED ACCESS. DOOR LATCH (LEVER/PUSH/PULL TYPE). DOOR HARDWR. SHALL BE MOUNTED MIN. OF 30" AND A MAX. OF 44" ABOVE THE FINISH PATH SURFACE. SPECIFY THAT EXTERIOR DOORS SHALL OPEN W/ MAX. EFFORT OF 5 POUNDS PRESSURE. PROVIDE A 10"X DOOR WIDTH KICK PLATE AT THE DOOR BASE.
17. EVERY PRIMARY ENTRANCE TO A DWELLING UNIT IN BUILDINGS CONTAINING THREE OR MORE DWELLING UNITS SHALL BE PROVIDED WITH A DOOR BUZZER, CHIME OR EQUIVALENT INSTALLATION, MOUNTED A MAXIMUM OF 48 INCHES ABOVE THE FLOOR, CONNECTED TO PERMANENT WIRING.
18. WHEN BUILDINGS AND/OR SPECIFIC FLOORS OF A BLDG. ARE REQUIRED TO BE ACCESSIBLE THE FACILITIES W/IN THESE SPACES SHALL BE ACCESSIBLE. TYPICAL FACILITIES ARE AS FOLLOWS: ENTRIES, EXITS, BATHING, TOILETS, LAVATORIES, MIRRORS, TOWEL & NAPKIN DISPENSERS, ELEVATORS, FOUNTAINS, TELEPHONES, KITCHENS, SWIMMING POOLS, COUNTERS, PATH OF TRAVEL WITHIN THE BLDG. AND ROOMS, DINING, BANQUET & BAR AREAS, AND OTHER AREAS. IN MULTIFAMILY DWELLING UNITS, EXCEPT FOR REQUIRED EXITS, DOORS WITHIN THE UNITS SHALL PROVIDE A MIN. 32 INCHES NOMINAL CLEAR SPACE, MEASURED BETWEEN THE FACE OF THE DOOR AND THE STOP. WHEN THE DOOR IS IN THE 90° OPEN POSITION TO PERMIT THE PASSAGE OF A DISABLE PERSON IN A WHEEL CHAIR. A 34 INCH DOOR IS ACCEPTABLE. THE NOMINAL CLEAR OPENING PROVIDED BY A STANDARD 6 FOOT SLIDING PATIO DOOR ASSEMBLY IS ACCEPTABLE.
19. EGRESS AND AREAS FOR EVACUATION ASSISTANCE SHALL BE PROVIDED IN THE SAME NUMBER AS REQUIRED FOR EXITS. (SEE UBC SECTION 3104) LOCATE THESE AREAS BY EACH EXIT. MIN. STAIRWAY WIDTH ADJACENT TO THESE AREAS SHALL BE 48". MIN. SIZE SHALL BE 30"X48" AND CLEAR OF THE EXIT WAY. IDENTIFY AREAS AS "AREA FOR EVACUATION ASSISTANCE". PROVIDE TWO WAY COMMUNICATION.
20. CORRIDORS SERVING AN OCCUPANT LOAD OF LESS THAN 10 SHALL BE 36" MIN. WIDTH. CORRIDORS SERVING AN OCCUP. LOAD 10 OR MORE SHALL BE 44" MIN. WIDTH. CORRIDORS THAT ARE OVER 200' LONG OR PROVIDE A CENTRAL POINT WITHIN THE CORRIDOR FOR TURNING OR PASSING SHALL BE 60" MIN. WIDTH (REFER TO TITLE 24, CHAPTER 33) STANDARDS ALSO APPLY TO EXTERIOR EXIT WAY BALCONIES. PARTITIONS, RAILS, COUNTERS, AND SIMILAR DIVIDERS NOT OVER 5'-9" IN HGT. ABOVE FLOOR SHALL NOT BE CONSTRUED TO FORM CORRIDORS.
21. LOCATE AND DETAIL ALL ACCESSIBLE STAIRS ON PLANS. ALL EDGES OF TREADS SHALL BE FREE OF SHARP OBJECTS AND HAVE SMOOTH ROUNDED EDGES. NOSING SHALL NOT PROJECT MORE THAN 1-1/2" PAST THE FACE OF THE RISER BELOW. OPEN RISERS ARE NOT PERMITTED. PROVIDE A 2" WIDE SLIP-RESISTANT COLOR CONTRASTING WARNING STRIP PARALLEL TO AND NOT MORE THAN 1" FROM THE STEP NOSE OR (STRIP TO BE PLACED AT THE UPPER APPROACH AND LOWER TREAD OF INTERIOR STAIRWAYS AND AT THE UPPER APPROACH AND ALL TREADS OF EXTERIOR STAIRWAYS.) PROVIDE HANDRAILS EACH SIDE OF STAIRWAY, SHOWING APPROVED HAND GRIP, MOUNTING, HEIGHT, AND RAIL RETURN.

ADA EGRESS NOTES

SCALE: N.T.S. (13 / T-2)

ELECTRICAL/APPLIANCE HEIGHTS

22. ELECTRICAL RECEPTACLES SHALL BE CENTERED NOT LESS THAN 15" ABOVE THE FINISH FLOOR OR WORKING PLATFORM. ELECTRICAL SWITCHES/CONTROLS AND ALARM INITIATING DEVICES (BOXES) SHALL BE LOCATED NOT MORE THAN 48" ABOVE THE FINISH FLOOR OR WORKING PLATFORM. PROVIDE A CLR. FLOOR/GROUND SPACE TO ACCOMMODATE A SINGLE STATIONARY WHEELCHAIR (30"X48"). THIS SPACE MAY BE A PART OF THE KNEE SPACE REQUIRED FOR SOME OBJECTS.
23. APPROVED NOTIFICATION APPLIANCES FOR THE HEARING IMPAIRED SHALL BE INSTALLED IN ACCORDANCE WITH NFPA REQUIREMENTS IN THE FOLLOWING AREAS: RESTROOMS, CORRIDORS, MUSIC PRACTICE ROOMS, BAND ROOMS, GYMS, MULTIPURPOSE ROOMS, OCCUPATIONAL SHOPS, OCCUPIED ROOMS WHERE AMBIENT NOISE IMPAIRS HEARING OF THE FIRE ALARM, LOBBIES, MEETING ROOMS, AND ANY OTHER AREA FOR COMMON USE.

ADA ELECTRICAL NOTES

SCALE: N.T.S. (14 / T-2)

COUNTY OF SAN LUIS OBISPO
DEPARTMENT OF GENERAL SERVICES
1087 SANTA ROSA STREET
SAN LUIS OBISPO, CA 93406
PHONE 8057815200

RAVATT ALBRECHT & ASSOCIATES, INC.
ARCHITECTURE • INTERIORS
GREG RAVATT, AIA
MECHANICAL • ELECTRICAL
JIM ALBRECHT, PE
1051 PACIFIC STREET
SAN LUIS OBISPO, CA 93401
PHONE: 8057543400 (LC)
8059382002 (M)
FAX: 8057543402 (LC)
8059382695 (M)
EMAIL: STEFFI@RAVATTALBRECHT.COM

REGISTERED ARCHITECT GREGORY ALLEN RAVATT LIC. NO. C-20608 STATE OF CALIFORNIA

No.	Revision	Date
	PLANCHECK REV1	9.26.12
	PLANCHECK REV2	10.24.12
	PLANCHECK REV3	11.19.12

County Facility:

ATASCADERO LIBRARY RENOVATION
6555 CAPISTRANO AVE.
ATASCADERO CA 93422

Project Manager: M. DEMARTINI
Checked By: MD
Client Approval:
Date: 08/20/2012

CONTRACTOR SHALL VERIFY ALL DIMENSIONS AND EXISTING CONDITIONS PRIOR TO COMMENCING WORK. REPORT ANY DISCREPANCIES TO COUNTY PROJECT COORDINATOR OR TO THE PROJECT ARCHITECT.

Project Title : ATASCADERO LIBRARY RENOVATION
6555 CAPISTRANO AVE. ATASCADERO CA 93422

Sheet Title : ADA COMPLIANCE

Sheet Number
T2
of Sheets

PROJECT No. 417

FILE No.

BIDDING SET 11-19-12

BID SET 03-26-13
BIDDING SET 11-19-12
BID SET 03-26-13

GENERAL NOTES

GRADING AND DRAINAGE NOTES:

1. CONTRACTOR SHALL BE RESPONSIBLE FOR ALL ITEMS SHOWN ON THE PLANS.

2. NO CONSTRUCTION SHALL BE STARTED WITHOUT PLANS APPROVED BY THE COUNTY. THE COUNTY SHALL BE NOTIFIED AT LEAST 24 HOURS PRIOR TO STARTING CONSTRUCTION. ANY CONSTRUCTION DONE WITHOUT APPROVED PLANS OR PRIOR NOTIFICATION TO THE COUNTY WILL BE REJECTED AND WILL BE DONE AT THE CONTRACTOR'S AND/OR OWNER'S RISK AND EXPENSE.

3. THE INSPECTOR, ACTING ON BEHALF OF THE COUNTY MAY REQUIRE REVISIONS IN THE PLANS TO SOLVE UNFORESEEN PROBLEMS THAT MAY ARISE IN THE FIELD. ALL REVISIONS SHALL BE SUBJECT TO THE APPROVAL OF THE OWNER'S ENGINEER.

4. NOT USED

5. THE CONTRACTOR SHALL BE FULLY RESPONSIBLE FOR PLACEMENT OF SAFETY DEVICES SUCH AS FENCING, BARRICADES, SAFETY TAPE, ETC., AND SHALL FOLLOW ALL APPLICABLE INDUSTRIAL SAFETY REGULATIONS. THE COUNTY AND ITS OFFICIALS, THE ENGINEER, AND THE OWNER SHALL NOT BE RESPONSIBLE FOR ENFORCING SAFETY REGULATIONS.

6. THE CONTRACTOR IS RESPONSIBLE FOR THE PROTECTION OR PROPER RESETTING OF ALL EXISTING MONUMENTS AND OTHER SURVEY MARKERS. ANY SURVEY MONUMENTS DESTROYED BY THE CONTRACTOR SHALL BE REPLACED IN ACCORDANCE WITH THE STATE LAND SURVEYOR'S ACT AT THE CONTRACTOR'S OWN EXPENSE.

7. IT SHALL BE THE RESPONSIBILITY OF THE CONTRACTOR TO CONTACT "UNDERGROUND SERVICE ALERT" AT 1-800-642-2444 FOR LOCATION OF POWER, GAS, OIL, AND TELEPHONE UNDERGROUND FACILITIES. CONTRACTOR WILL ALSO BE RESPONSIBLE FOR CONTACTING THE APPROPRIATE AGENCY FOR THE LOCATION OF ALL UNDERGROUND FACILITIES.

8. THESE PLANS DO NOT AUTHORIZE SITE DISTURBANCE BEYOND THE LIMITS OF GRADING SHOWN. THE CONTRACTOR SHALL BE RESPONSIBLE FOR OBTAINING PERMISSION TO ENTER UPON ADJOINING PROPERTY IF NECESSARY TO GRADE PRIOR TO CONSTRUCTION.

9. ANY DEVIATION FROM THESE PLANS WITHOUT PRIOR APPROVAL FROM THE DESIGN ENGINEER SHALL BE AT THE CONTRACTOR'S OWN RISK AND EXPENSE.

10. NO GRADING SHALL OCCUR WITHIN 2 FEET OF THE PROPERTY LINES EXCEPT AS NECESSARY TO IMPROVE EXISTING CONDITIONS.

11. IT IS THE RESPONSIBILITY OF THE CONTRACTOR TO VERIFY ACTUAL EARTHWORK QUANTITIES FOR BIDDING PURPOSES. THE ENGINEER DOES NOT, EXPRESSLY OR BY IMPLICATION EXTEND ANY WARRANTY FOR EARTHWORK QUANTITIES. IT IS THE INTENT OF THE OWNER TO HAVE A BALANCED CUT AND FILL. EXCESS EARTHWORK TO BE DISTRIBUTED APPROPRIATELY AND IN ACCORDANCE WITH THE SOILS REPORT ONSITE.

12. THE CONTRACTOR SHALL PROVIDE DUST CONTROL DURING ALL PHASES OF THE WORK IN ACCORDANCE WITH CITY ORDINANCES AND APCD.

13. ALL GRADING SHALL BE CONDUCTED IN ACCORDANCE WITH APPENDIX J OF THE 2010 CBC AND THE CITY GRADING ORDINANCE.

15. MATERIAL TO BE USED AS BACK FILL OR EMBANKMENT SHALL BE APPROVED BY THE SOILS ENGINEER AND BE FREE OF OBJECTIONABLE MATERIAL SUCH AS TREES, STUMPS, ROOTS, LOGS OR OTHERWISE DELETERIOUS MATERIAL. THE CONTRACTOR SHALL FOLLOW THE SITE DEVELOPMENT RECOMMENDATIONS AS NOTED IN THE PROJECT SOILS REPORT.

16. COMPACTION TEST SHALL BE MADE ON SUB-GRADE MATERIAL AND MATERIAL PLACED AS SPECIFIED BY THE ENGINEER. SOIL TESTS SHALL BE MADE PRIOR TO THE PLACING OF STRUCTURAL MATERIAL.

18. A REGISTERED CIVIL ENGINEER MUST CERTIFY THAT THE IMPROVEMENTS, WHEN COMPLETED, ARE IN ACCORDANCE WITH THE APPROVED PLANS. PRIOR TO THE REQUEST FOR FINAL INSPECTION, AS-BUILT PLANS ARE TO BE PREPARED AFTER CONSTRUCTION IS COMPLETE. THE CIVIL ENGINEER CERTIFYING THE IMPROVEMENTS AND PREPARING AS-BUILT PLANS SHALL BE PRESENT WHEN THE FINAL INSPECTION IS MADE.

19. CONTRACTOR SHALL PROVIDE EROSION CONTROL PLANTING FOR ALL FRESH CUT AND FILL SLOPES AND ON ALL DISTURBED SURFACES OTHER THAN PAVED OR GRAVEL SURFACES. PERMANENT VEGETATION SHALL BE ESTABLISHED PRIOR TO FINAL INSPECTION.

20. IN THE EVENT THAT DURING GRADING, CONSTRUCTION OR DEVELOPMENT OF THE PROJECT, AN ARCHAEOLOGICAL RESOURCES ARE UNCOVERED, ALL WORK SHALL BE HALTED UNTIL THE COUNTY HAS REVIEWED THE RESOURCES FOR THEIR SIGNIFICANCE. IF HUMAN BURIALS ARE ENCOUNTERED, THE COUNTY CORONER (781-4513) SHALL BE CONTACTED IMMEDIATELY. THE APPLICANT MAY BE REQUIRED TO PROVIDE ARCHAEOLOGICAL STUDIES AND/OR MITIGATION MEASURES.

21. EROSION AND SEDIMENT CONTROL BEST MANAGEMENT PRACTICES MUST BE IN PLACE AND FUNCTIONAL PRIOR TO THE FIRST INSPECTION. NO INSPECTIONS CAN BE PERFORMED IF THEY ARE NOT IN PLACE OR HAVE FAILED TO PROVIDE EROSION CONTROL. FAILURE TO MAINTAIN EROSION CONTROL WILL CAUSE INSPECTION TO BE DELAYED UNTIL EROSION CONTROL MEASURES ARE FUNCTIONAL. SEE EROSION CONTROL NOTES THIS SHEET AND EROSION CONTROL PLANS FOR ADDITIONAL INFO.

GEOTECHNICAL REPORT

THE SOILS REPORT WAS PREPARED BY BUENA GEOTECHNICAL SERVICES, REPORT #B-043662, DATED FEBRUARY 11, 2004 FOR 5855 CAPISTRANO AVENUE, ATASCADERO, CA.

EROSION CONTROL & DUST CONTROL NOTES:

1. THE CONTRACTOR SHALL BE RESPONSIBLE FOR THE PLACEMENT AND MAINTENANCE OF ALL EROSION CONTROL DEVICES AS SPECIFIED BY THE ENGINEER OF WORK OR THE COUNTY OF SAN LUIS OBISPO UNTIL SUCH TIME THAT THE PROJECT ACCEPTED AS COMPLETED BY THE GOVERNING JURISDICTION. THESE DEVICES SHALL BE IN PLACE OR BE READY TO PLACE FOR THE DURATION OF THE CONSTRUCTION PERIOD. IN THE EVENT THAT THE DEVICES ARE NOT PERMANENTLY IN PLACE, THEY SHALL BE PLACED FOR A FORCASTED QUALIFYING RAIN EVENT THAT PRODUCES 0.6 INCHES OR MORE PRECIPITATION WITH A 48 HOUR OR GREATER PERIOD BETWEEN RAIN EVENTS. AN EMERGENCY CREW SHALL BE AVAILABLE 24 HOURS PER DAY IN THE EVENT AN EROSION PROBLEM SHOULD OCCUR. A RESPONSIBLE PERSON AND THEIR PHONE NUMBER SHALL BE NAMED HERE UPON:

NAME: TO BE PROVIDED
PHONE NUMBER:

2. THE CONTRACTOR SHALL PROVIDE DUST CONTROL DURING ALL PHASES OF THE WORK.

3. **DURING CONSTRUCTION/GROUND DISTURBING ACTIVITIES.** THE CONTRACTORE SHALL IMPLEMENT THE FOLLOWING PARTICULATE (DUST) AND OZONE CONTROL MEASURES. THESE MEASURES SHALL BE SHOWN ON THE TRACT IMPROVEMENT PLANS. IN ADDITION, THE CONTRACTOR OR BUILDER SHALL DESIGNATE A PERSON OR PERSONS TO MONITOR THE DUST CONTROL PROGRAM AND TO ORDER INCREASED WATERING, AS NECESSARY, TO PREVENT TRANSPORT OF DUST OFF SITE. THEIR DUTIES SHALL INCLUDE HOLIDAY AND WEEKEND PERIODS WHEN WORK MAY NOT BE IN PROGRESS. THE NAME AND TELEPHONE NUMBER OF SUCH PERSONS SHALL BE PROVIDED TO THE APCD PRIOR TO COMMENCEMENT OF CONSTRUCTION.

A. REDUCE THE AMOUNT OF DISTURBED AREA WHERE POSSIBLE;
B. USE WATER TRUCKS OR SPRINKLER SYSTEMS IN SUFFICIENT QUANTITIES TO PREVENT AIRBORNE DUST FROM LEAVING THE SITE. INCREASED WATERING FREQUENCY WILL BE REQUIRED WHENEVER WIND SPEEDS EXCEED 15 MPH. RECLAIMED (NON-POTABLE) WATER SHOULD BE USED WHENEVER POSSIBLE;
C. ALL DIRT STOCK PILE AREAS SHOULD BE SPRAYED DAILY AS NEEDED;
D. PERMANENT DUST CONTROL MEASURES, SUCH AS IMPLEMENTATION OF APPROVED LANDSCAPE PLANS, SHALL BE IMPLEMENTED AS SOON AS POSSIBLE FOLLOWING COMPLETION OF ANY SOIL DISTURBING ACTIVITIES;
E. EXPOSED GROUND AREAS THAT ARE PLANNED TO BE REWORKED AT DATES GREATER THEN ONE MONTH AFTER INITIAL GRADING SHOULD BE SOWN WITH A FAST GERMINATING NON-AGGRESSIVE GRASS SEED (E.G., NATIVE, BARLEY) AND WATERED UNTIL VEGETATION IS ESTABLISHED;
F. ALL DISTURBED SOIL AREAS NOT SUBJECT TO REVEGETATION MUST BE STABILIZED USING APPROVED CHEMICAL SOIL BINDERS, JUTE NETTING, OR OTHER METHODS APPROVED IN ADVANCE BY APCD THAT WILL NOT HAVE A NEGATIVE IMPACT TO DOWNSTREAM CREEKS;
G. ALL ROADWAYS, DRIVEWAYS, SIDEWALKS, ETC. TO BE PAVED SHOULD BE COMPLETED AS SOON AS POSSIBLE;
H. ALL TRUCKS HAULING DIRT, SAND, SOIL, OR OTHER LOOSE MATERIALS ARE TO BE COVERED OR SHOULD MAINTAIN AT LEAST TWO FEET OF FREEBOARD (MINIMUM VERTICAL DISTANCE BETWEEN TOP OF LOAD AND TOP OF TRAILER) IN ACCORDANCE WITH CALIFORNIA VEHICLE CODE SECTION 23114 (THIS MEASURE HAS THE POTENTIAL TO REDUCE PM10 (PARTICULATE MATER) EMISSIONS FROM THIS SOURCE BY 7 TO 14%);
I. INSTALL WHEEL WASHERS WHERE VEHICLES ENTER AND EXIT UNPAVED ROADS ONTO STREETS, OR WASH OFF TRUCKS AND EQUIPMENT LEAVING THE SITE (THIS MEASURE HAS THE POTENTIAL TO REDUCE PM10 EMISSIONS FROM THIS SOURCE 40 TO 70%);
J. SWEEP STREETS AT THE END OF EACH DAY IF VISIBLE SOIL MATERIAL IS CARRIED ONTO ADJACENT PAVED ROADS. WATER SWEEPERS WITH RECLAIMED WATER SHOULD BE USED WHERE FEASIBLE (THIS MEASURE HAS THE POTENTIAL TO REDUCE PM10 EMISSIONS FROM THIS SOURCE 25 TO 40%);
K. MAINTAIN EQUIPMENT IN TUNE PER MANUFACTURER'S SPECIFICATIONS;
L. LIMIT THE CUT AND FILL PROCESS TO LESS THAN 2,000 CUBIC YARDS PER DAY.

APPLICABLE CODES 2010:
California Building Code, Vols 1 & 2 [2009 IBC]
California Plumbing Code (2009 UPC)
California Mechanical Code (2009 UMC)
California Electrical Code (2008 NEC)
California Energy Code (v.2008 since 1/1/2010)
California Green Building Code (New)
California Fire Code (2009 IFC)
California Reference Standards Code
American Disabilities Act
2 City of Atascadero Construction and Demolition Recycling Ordinance

BENCH MARK:

THE BENCH MARK FOR THIS PROJECT IS THE FINISH FLOOR OF (E) BUILDING PER GRADING AND DRAINAGE PLANS FOR TRACT 1858-HOTEL PARK COMMERCIAL CENTER BY NORTH COAST ENGINERING DATED 10-12-2005.

ELEVATION=879.00'

BASIS OF BEARINGS

THE BASIS OF BEARINGS FOR THIS PROJECT IS BASED ON FOUND MONUMENTS ALONG THE NORTHRLY LINE OF LOT 1
BEARING N 75° 47' 58" W.

SURVEYOR'S NOTES

1. NO TITLE SEARCH (TITLE REPORT) WAS PROVIDED TO THE SURVEYOR (MBS LAND SURVEYS). EASEMENTS WHICH MAY AFFECT THE SUBJECT PROPERTY HAVE NOT BEEN PLOTTED. LEGAL DESCRIPTION AND TITLE REPORT AVAILABLE FROM THE COUNTY OF SLO. 2

2. ONLY THE SURFACE EVIDENCE OF UNDERGROUND UTILITIES HAVE BEEN MEASURED IN THE FIELD ON THIS SURVEY. IF APPROXIMATE UNDERGROUND ALIGNMENTS ARE SHOWN, I MAKE NO WARRANTEE AS TO THE ACTUAL LOCATION, TYPE OR DEPTH OF THOSE UNDERGROUND UTILITIES. CALL UNDERGROUND SERVICE ALERT (USA) AT 1-800-642-2444 TO VERIFY THE ACTUAL LOCATION OF UTILITIES PRIOR TO ANY EXCAVATION. THE SURVEYOR ALSO HAS MADE NO INVESTIGATION AS TO SUBSURFACE ENVIRONMENTAL CONDITIONS THAT WOULD AFFECT THE USE OR DEVELOPMENT OF THIS PROPERTY.

3. IT WILL BE THE ARCHITECT'S RESPONSIBILITY TO VERIFY SETBACK AND HEIGHT RESTRICTIONS WITH THE LOCAL GOVERNING AGENCY.

4. THE SIGNED AND SEALED ORIGINAL DRAWING OF THIS MAP CONSTITUTES THE FINAL WORK PRODUCT. MBS LAND SURVEYS WILL NOT BE LIABLE FOR ELECTRONIC VERSIONS OF THIS MAP PROVIDED TO OTHER PARTIES.

5. THE BOUNDARY LINES SHOWN HEREON WERE COMPILED FROM RECORD INFORMATION (I.E. RECORDED MAPS OR DEEDS) AND ARE NOT INTENDED TO REPRESENT THE TRUE OR ACTUAL BOUNDARY LINES OF THE SUBJECT PROPERTY. TO DETERMINE THE ACTUAL BOUNDARIES OF THE PARCEL WILL REQUIRE A COMPLETE BOUNDARY SURVEY, THE SETTING OF PROPERTY MONUMENTS AND THE FILING OF A CORNER RECORD OR RECORD OF SURVEY IN CONFORMANCE WITH STATE LAW (LS ACT SEC. 8762). APPROXIMATE DIMENSIONAL TIES FROM THE BOUNDARY LINES SHOWN TO PHYSICAL FEATURES (E.G. BUILDINGS, FENCES, WALLS OR TREES, ETC.) SHOWN ON THIS MAP CAN BE DERIVED BY SCALING THE FINISHED WORK PRODUCT WHICH IS PLOTTED AT THE SCALE INDICATED. HOWEVER, DIMENSIONAL TIES DERIVED DIRECTLY FROM THE DIGITAL PRODUCT (AUTOCAD DRAWING) ARE NOT ACCURATE AND CANNOT BE RELIED UPON FOR DETERMINING BUILDING SETBACKS OR THE PLACEMENT OF ANY PROPOSED NEW CONSTRUCTION. THE LOCATION OF NEW CONSTRUCTION CAN ONLY BE PROPERTY DESIGNED WHEN IT IS BASED ON AN ACTUAL BOUNDARY SURVEY OF THE PARCEL. OTHERWISE, MODIFICATIONS TO THE STRUCTURE MAY BE NECESSARY DURING CONSTRUCTION TO COMPLY WITH AGENCY SETBACK REQUIREMENTS.

LEGEND

ABBREVIATIONS:

AB - AGGREGATE BASE
AC - ASPHALT CONCRETE
BLDG - BUILDING
BM - BENCHMARK
CL - CENTERLINE
CO - CLEANOUT
CONC - CONCRETE
CMP - CORRGATED METAL PIPE
CJ- CONTROL JOINT
D/W - DRIVEWAY
ELEC - ELECTRICAL
ELEV - ELEVATION
EP - EDGE OF PAVEMENT
(E) - EXISTING
EG - EXISTING GARADE
FDC - FIRE DEPARTMENT CONNECTION
FG - FINISHED GRADE
FL - FLOWLINE
FNC - FENCE
FS - FINISHED SURFACE (PAVEMENT)
GB - GRADE BREAK
GP - GRADING PLAN
HDPE - HIGH DENSITY POLYETHELINE
HP - HIGH POINT
LF - LINEAR FEET
LP - LOW POINT
MAX - MAXIMUM
MIN - MINIMUM
OHE - OVERHEAD ELEC
UG - UNDERGROUND
PA - PLANTER
PL - PROPERTY LINE
POC - POINT OF CONNECTION
PP - POWER POLE
PVC - POLYVINYL CHLORIDE
PVMT - PAVEMENT
R - RADIUS
RD-ROOF DRAIN
REQ - REQUIRED
SHT - SHEET
SLOCO - SAN LUIS OBISPO COUNTY
SS - SANITARY SEWER
STA - STATION
STD - STANDARD
TB - THRUST BLOCK
TBA - TO BE ABANDONED IN PLACE
TBR - TO BE REMOVED
TBP - TO BE PROTECTED
TC - TOP OF CURB
TEL - TELEPHONE
TEMP - TEMPORARY
TF - TOP OF FOOTING
TG - TOP OF GRATE
TYP - TYPICAL
TW - TOP OF WALL
UP - UTILITY POLE
VERT - VERTICAL
WL - WATER LINE
WV - WATER VALVE
WWM - WELDED WIRE MESH
(XXX FG) - EXISTING FINISH GRADE OR SURFACE

PROPERTY / ROW LINE
EXISTING CONCRETE CURB
EXISTING EDGE OF CONCRETE WALK
EXISTING STORM DRAIN LINE
FLOWLINE SWALE
EXISTING CONTOURS (1' INTERVAL)
PROPOSED CONTOURS (1' INTERVAL)
OHE — OVERHEAD ELECTRIC
O — NEW FENCE/RAILING
X — EX. FENCE
PGE — PG&E BOX
TEL — TELEPHONE BOX/PED.
CATV — CABLE T.V. BOX
ELEC — ELECTRIC BOX
STREET LIGHT
JP — JOINT POLE
PP — POWER POLE
GUY WIRE
FIRE HYDRANT
WATER VALVE
THRUST BLOCK
DROP INLET
STORM DRAIN MANHOLE
FIRE HYDRANT
WATER WELL
WATER VALVE
WM — WATER METER
SEWER MANHOLE
SEWER CLEANOUT
PGE — PG&E BOX
GM — GAS METER
TEL — TELEPHONE BOX
SIG — SIGNAL BOX
CATV — CABLE T.V. BOX
ELEC — ELECTRIC BOX
1 — TELEPHONE MANHOLE
STREET LIGHT
JP — JOINT POLE
PP — POWER POLE
GUY WIRE

SHEET INDEX

SHEET No.	SHEET TITLE
C1.0	LEGEND AND GENERAL NOTES
C2.0	DEMOLITION AND PROTECTION PLAN
C3.0	SITE, GRADING & DRAINAGE PLAN
C4.0	CONSTRUCTION DETAILS
C5.0	EROSION CONTROL PLAN
C6.0	EROSION CONTROL NOTES AND DETAILS
C7.0	EROSION CONTROL DETAILS

COUNTY OF SAN LUIS OBISPO
DEPARTMENT OF GENERAL SERVICES
1087 SANTA ROSA STREET
SAN LUIS OBISPO, CA 93408
PHONE 8057781S200

RA KAVATT ALBRIGHT & ASSOCIATES INC. ARCHITECTURE ENGINEERING
ARCHITECTURE INTERIORS
GREG KAVATT, AIA
MECHANICAL, ELECTRICAL
JIM ALBRIGHT, PE
1570 PACIFIC STREET
SAN LUIS OBISPO CA 93401
PHONE 8057541681 (LC)
8059282002 (M)
FAX: 8059281966 (LC)
8059281965 (M)
EMAIL:INFO@KAVATT-ALBRIGHT.COM

kvc CIVIL ENGINEERING & HYDROLOGY
Keith V. Crowe, P.E.
P.O. Box 832, Atascadero, CA 93423-0832
Phone & Fax: (805) 464-0975
KVCrowe@Charter.net

REGISTERED PROFESSIONAL ENGINEER KEITH V. CROWE Lic. No. 31,581 Expires 12/12 STATE OF CALIFORNIA

No.	Revision	Date
1	PLANCHECK REV1	09.26.12
2	PLANCHECK REV2	10.24.12

County Facility

ATASCADERO LIBRARY RENOVATION

5855 CAPISTRANO AVE.
ATASCADERO CA 93422

Project Manager: M. DEMARTINI
Checked By:
Client Approval:
Date:

CONTRACTOR SHALL VERIFY ALL DIMENSIONS AND (E) CONDITIONS PRIOR TO COMMENCING WORK. REPORT ANY DISCREPANCIES TO COUNTY PROJECT COORDINATOR OR TO THE PROJECT ARCHITECT.

Project Title : ATASCADERO LIBRARY RENOVATION
5855 CAPISTRANO AVE. ATASCADERO CA 93422

Sheet Title : LEGEND AND GENERAL NOTES

Sheet Number
C1.0
of Sheets

PROJECT No. 417

FILE No.

BID SET 11.19.12

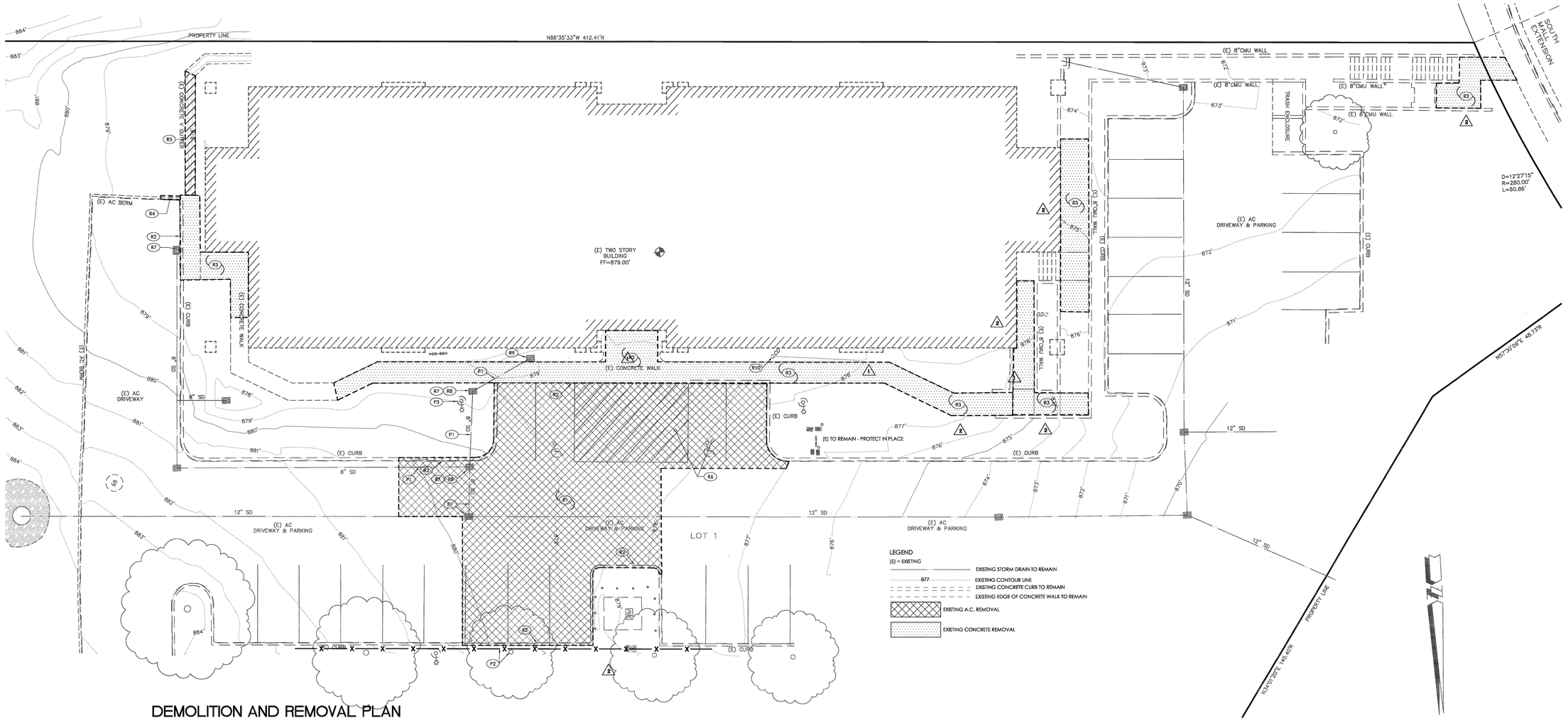

LEGEND
(E) = EXISTING

- EXISTING STORM DRAIN TO REMAIN
- 877 EXISTING CONTOUR LINE
- EXISTING CONCRETE CURB TO REMAIN
- EXISTING EDGE OF CONCRETE WALK TO REMAIN
- EXISTING A.C. REMOVAL
- EXISTING CONCRETE REMOVAL

DEMOLITION AND REMOVAL PLAN

DEMOLITION AND PROTECTION PLAN

- P1 PROTECT IN PLACE EXISTING STORM DRAIN LINE / CATCH BASIN.
- P2 PROTECT IN PLACE EXISTING TREES. PROVIDE TREE PROTECTION FENCING PER DETAIL THIS SHEET.
- P3 PROTECT EXISTING LIGHT POLE AND BASE IN PLACE.

- R1 SAWCUT AND REMOVE EXISTING A.C. PAVEMENT AND BASE AS REQUIRED TO ESTABLISH NEW FINISH SURFACE PER SHT C3 AND SPECIFICATIONS.
- R2 SAWCUT AND REMOVE EXISTING CONCRETE CURB PER SPECIFICATION AND TO LIMITS SHOWN .
- R3 SAWCUT AND REMOVE EXISTING CONCRETE PAVING PER SPECIFICATIONS AND TO LIMITS SHOWN.
- R4 SAWCUT AND REMOVE EXISTING A.C. DIKE PER SPECIFICATION AND TO LIMITS SHOWN.
- R5 SAWCUT AND REMOVE EXISTING CONCRETE SWALE PER SPECIFICATIONS AND TO LIMITS SHOWN.
- R6 REMOVE EXISTING PAVEMENT MARKING BY GRINDING.
- R7 REMOVE AND SALVAGE "NO DUMPING" WARNING DISK AND RELOCATE TO NEW TOP OF CURB PER C3.
- R8 ADJUST EXISTING STORM DRAIN CATCH BASIN RIM TO NEW FINISH SURFACE ON SHT C3. REPLACE GRATE WITH ADA / TITLE 24 GRATE.
- 1 R9 REMOVE CATCH BASIN - SALVAGE "NO DUMPING" WARNING DISK AND RELOCATE TO NEW GRATE PER C3.
- 1 R10 SEWER CLEANOUT CAP TO BE LOWERED PER SHT C3.

NOTES:

1. SEE ARCHITECTURAL, STRUCTURAL, MECHANICAL AND PLUMBING FOR ADDITIONAL ITEMS OF CONSTRUCTION, DEMOLITION, PROTECTION AND DIMENSIONS.
2. SEE SITE, GRADING AND DRAINAGE PLAN SHEET C3 FOR ADDITIONAL INFORMATION.
3. POTHOLE AND VERIFY MATERIAL, LOCATION AND SIZE OF ALL EXISTING WET AND DRY UTILITIES PRIOR TO COMMENCEMENT OF CONSTRUCTION.
4. EXISTING IRRIGATION SYSTEM TO BE RETROFITED AS REQUIRED.
5. 2 PROVIDE COVERS / PROTECTION FOR DUMPSTERS AND WASTE CONTAINERS.

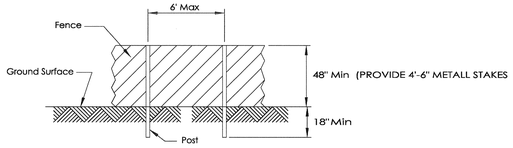

POST AND FENCE DETAIL

NOTES:

1. Provide fencing at drip line where possible to avoid ground compaction from vehicles and materials during construction.
2. Fence posts shall be standard steel T-posts or equal.
3. The fence may be either 48" high orange plastic web fencing, chainlink, or snow fencing. If using orange plastic web, a minimum of (4) zip ties shall be used per stake to secure fence.

A TREE PROTECTION FENCING
NO SCALE

SCALE IN FEET
10 0 10 20

COUNTY OF SAN LUIS OBISPO
DEPARTMENT OF GENERAL SERVICES
1087 SANTA ROSA STREET
SAN LUIS OBISPO, CA 93408
PHONE 805.781.5200

ARCHITECTURE, INTERIORS, GRIGG/AVATT, NA
MECHANICAL, ELECTRICAL, JM ALBIGETTE
AVATT ALBIGETTE & ASSOCIATES, INC. ARCHITECTURE/ENGINEERING
1151 PACIFIC STREET SAN LUIS OBISPO CA 93401
PHONE 805.786.4158 ELC 805.928.5002 SM. FAX 805.928.5003 ELC 805.928.5190 JM
1 MAIL@AVATTALBIGETTE.COM

kvc
CIVIL ENGINEERING & HYDROLOGY
Keith V. Crowe, P.E.
P.O. Box 832, Atascadero, CA 93423-0832
Phone & Fax: (805) 464-0975
KVCrowe@Charter.net

REGISTERED PROFESSIONAL ENGINEER KEITH V. CROWE Lic. No. 31,581 Expires 12/12 STATE OF CALIFORNIA

No.	Revision	Date
1	PLANCHECK REV1	09.26.12
2	PLANCHECK REV2	10.24.12

County Facility

ATASCADERO LIBRARY RENOVATION
5855 CAPISTRANO AVE.
ATASCADERO CA 93422

Project Manager M. DEMARTINI
Checked By
Client Approval
Date

CONTRACTOR SHALL VERIFY ALL DIMENSIONS AND (E) CONDITIONS PRIOR TO COMMENCING WORK. REPORT ANY DISCREPANCIES TO COUNTY PROJECT COORDINATOR OR TO THE PROJECT ARCHITECT.

Project Title : ATASCADERO LIBRARY RENOVATION
5855 CAPISTRANO AVE
ATASCADERO CA 93422

Sheet Title : DEMOLITION AND REMOVAL PLAN

Sheet Number C2.0
of Sheets

PROJECT No. 417

FILE No.

BID SET 11.19.12

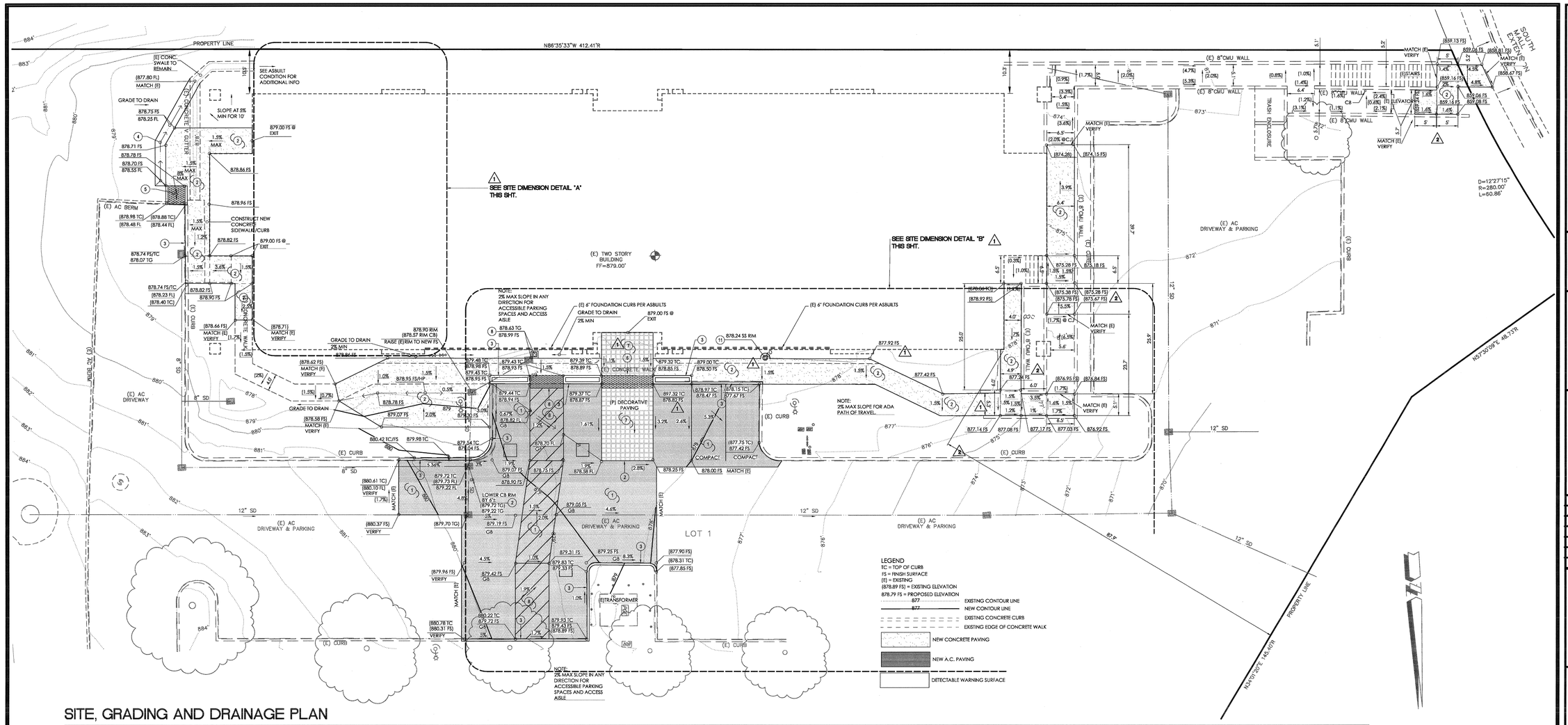

SITE, GRADING AND DRAINAGE PLAN

CONSTRUCTION NOTES:

1. CONSTRUCT A.C. PAVEMENT STRUCTURAL SECTION BASED ON A T.I. OF 5.0 AND R-VALUE TO BE DETERMINED AT THE TIME OF CONSTRUCTION.
2. CONSTRUCT CONCRETE FLATWORK PER DETAIL "B" SHT C4.0.
3. CONSTRUCT CONCRETE CURB PER DETAIL "A" SHT C4.0.
4. CONSTRUCT CONCRETE SWALE PER DETAIL "C" SHT C4.0.
5. CONSTRUCT NEW DISABLE RAMP PER DETAIL "D" SHT C4.0 AND ADA/TITLE 24 REQUIREMENTS.
6. INSTALL 36" WIDE MASCO CASTinTACT DETECTABLE WARNING SURFACE PER DETAIL "E" SHT C4.0", MANUFACTURERS RECOMENDATIONS AND SPECIFICATIONS.
7. CONSTRUCT SPECIAL PAVING PER ARCHITECTURAL PLANS.
8. PROVIDE NEW PAVEMENT STRIPPING AND DISABLED PARKING SIGNAGE AND STRIPPING PER ARCHITECTURAL PLANS.
9. ADJUST (E) STORM DRAIN GRATE TO NEW FINISH SURFACE .
10. REINSTALL "NO DUMPING" WARNING DISK @ STORM DRAIN CATCH BASIN. SEE DEMOLITION PLANS.
11. PROVIDE NEW CHRISTY G5 BOX COVER FOR (E) SEWER CLEANOUT PER DETAIL "F" SHT C4.0.
12. INSTALL NEW 12X12 MIDSTATE CONC. CATCH BASIN W/ NON -TRAFFIC RATED GRATE AND EXTEND EXISTING 8" SD PIPE. REINSTALL "NO DUMPING" WARNING DISK ON GRATE.

NOTES:

1. SEE ARCHITECTURAL, STRUCTURAL, MECHANICAL AND PLUMBING FOR ADDITIONAL ITEMS OF CONSTRUCTION, DEMOLITION, PROTECTION AND DIMENSIONS.
2. DEMOLITION AND PROTECTION PLAN SHEET C2.0 FOR ADDITIONAL INFORMATION.
3. POTHOLE AND VERIFY MATERIAL, LOCATION AND SIZE OF ALL EXISTING WET AND DRY UTILITIES PRIOR TO COMMENCEMENT OF CONSTRUCTION.
4. EXISTING IRRIGATION SYSTEM TO BE RETROFITTED AS REQUIRED.
5. FIELD VERIFY ALL DIMENSIONS AND GRADES PRIOR TO COMMENCEMENT OF CONSTRUCTION. REPORT ANY DISCREPANCIES TO ENGINEER OF RECORD.
6. PROVIDE SECURITY FENCING AND SIGNAGE AROUND AREA OF WORK TO PRECLUDE PARKING AND ACCESS BY TENANTS WITHIN COMPLEX DURING CONSTRUCTION.

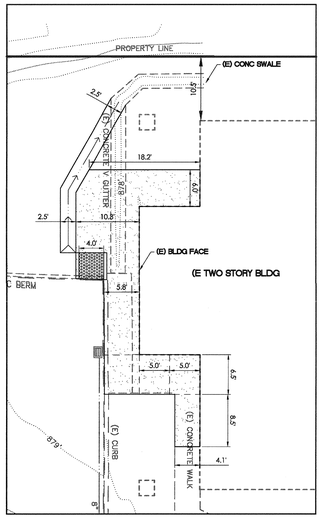

SITE DIMENSION DETAIL "A"

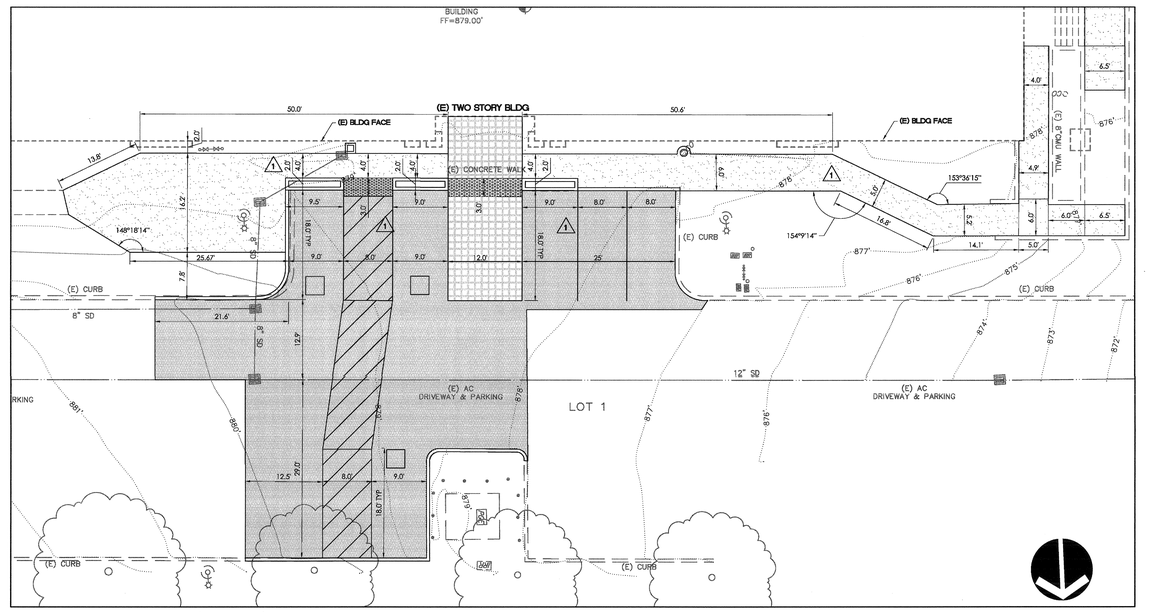

SITE DIMENSION DETAIL "B"

COUNTY OF SAN LUIS OBISPO DEPARTMENT OF GENERAL SERVICES
1087 SANTA ROSA STREET
SAN LUIS OBISPO, CA 93408
PHONE: 805.781.5200

RAVATT ALBRECHT & ASSOCIATES, INC. ARCHITECTURE, ENGINEERING
ARCHITECTURE: INTERIORS GREG RAVATT, AIA MECHANICAL, ELECTRICAL JIM ALBRECHT, PE
1215 PACIFIC STREET SAN LUIS OBISPO, CA 93401 PHONE: (805) 786-4300 (L.C) (805) 928-3002 (M) FAX: (805) 786-0993 (L.C) (805) 928-2993 (M) EMAIL: OFFICE@RAVATTALBRECHT.COM

kvc CIVIL ENGINEERING & HYDROLOGY
Keith V. Crowe, P.E.
P.O. Box 830, Atascadero, CA 93423-0832
Phone & Fax: (805) 464-0075
KVCrowe@Charter.net

REGISTERED PROFESSIONAL ENGINEER KEITH V. CROWE Lic. No. 31,581 Expires 12/13 STATE OF CALIFORNIA

No.	Revision	Date
1	PLANCHECK REV1	09.26.12
2	PLANCHECK REV2	10.24.12

County Facility

ATASCADERO LIBRARY RENOVATION

5855 CAPISTRANO AVE.
ATASCADERO CA 93422

Project Manager: M. DEMARTINI
Checked By:
Client Approval:
Date:

CONTRACTOR SHALL VERIFY ALL DIMENSIONS AND (E) CONDITIONS PRIOR TO COMMENCING WORK. REPORT ANY DISCREPANCIES TO COUNTY PROJECT COORDINATOR OR TO THE PROJECT ARCHITECT.

Project Title: ATASCADERO LIBRARY RENOVATION
5555 CAPISTRANO AVE.
ATASCADERO CA 93422

Sheet Title: SITE, GRADING AND DRAINAGE PLAN

Sheet Number C3.0 of Sheets

PROJECT No. 417

FILE No.

BID SET 11.19.12

BID SET 03-26-13
BID SET 03-26-13

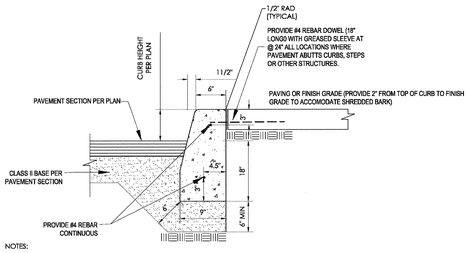

NOTES:

1. CONCRETE CONCRETE SHALL BE A 5.5 SACK MIX WITH A 4" MIN. SLUMP BY CALIF. TEST METHOD 519A. AFTER FORMS ARE STRIPPED.
2. 6" MINIMUM CLASS II AGGREGATE BASE TO 95% RELATIVE COMPACTION OR MATCH BASE THICKNESS REQUIREMENT FOR NEW OR EXISTING ROAD/DRIVEWAY SECTION, WHICHEVER IS GREATEST.
3. 12" MINIMUM SUBGRADE TO 95% RELATIVE COMPACTION.
4. SUBGRADE AND AGGREGATE BASE COMPACTION REQUIREMENTS SHALL EXTEND TO THE BACK OF CURB OR TO THE BACK OF ATTACHED SIDEWALK (WHICHEVER CONDITION IS APPLICABLE).
5. UNDER NO CIRCUMSTANCES SHALL UTILITY LIDS AND CONCRETE COLLARS BE LOCATED WITHIN THE TOP OF CURB.
6. EXPANSION JOINT AND DOWELING CAN BE ELIMINATED IF CONCRETE CURB AND PAVEMENT ARE POURED MONOLITHICLY.

A CONCRETE CURB

SCALE: NTS

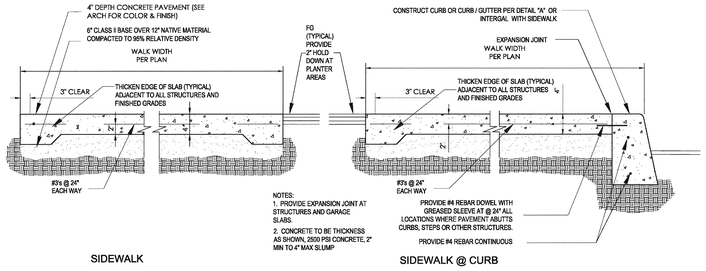

B CONCRETE FLATWORK SECTION

SCALE: NTS

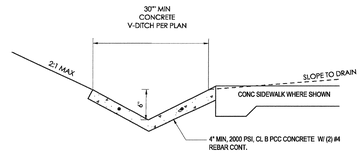

C CONCRETE SWALE

SCALE: NTS

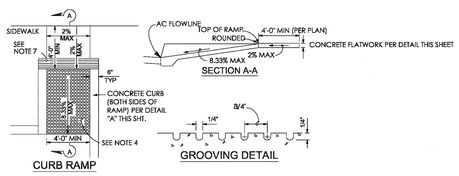

NOTES:

1. THE CURB RAMP SHALL BE OUTLINED, AS SHOWN, WITH A 1'-0" WIDE BORDER WITH 1/4" GROOVES APPROXIMATELY 1/2" ON CENTER. SEE GROOVING DETAIL.
2. TRANSITIONS FROM RAMPS AND LANDING TO WALKS, GUTTERS OR STREETS SHALL BE FLUSH AND FREE OF ABRUPT CHANGES.
3. MAXIMUM SLOPES OF ADJOINING GUTTERS, THE ROAD SURFACE IMMEDIATELY ADJACENT TO THE CURB RAMP OR ACCESSIBLE ROUTE SHALL NOT EXCEED 5 PERCENT WITHIN 4'-0" OF THE TOP AND BOTTOM OF THE CURB RAMP.
4. CURB RAMPS SHALL HAVE A DETECTABLE WARNING SURFACE THAT EXTENDS THE FULL WIDTH AND DEPTH OF THE RAMP. SEE DETECTABLE WARNING DETAIL THIS SHEET.

D CONCRETE RAMP

SCALE: NTS

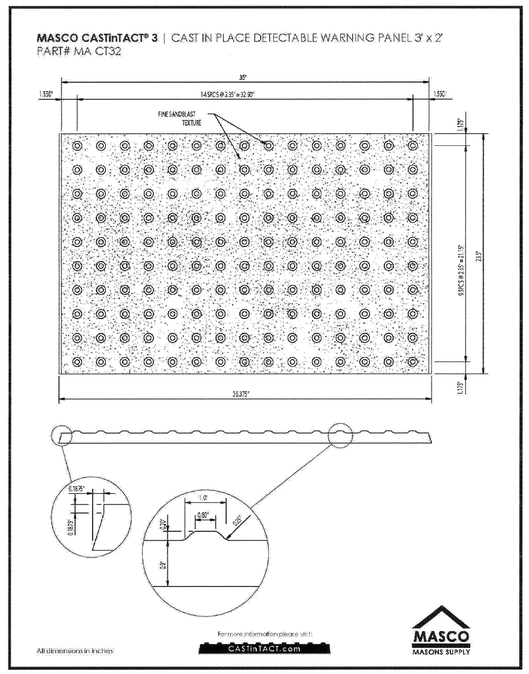

E DETECTABLE WARNING DETAIL

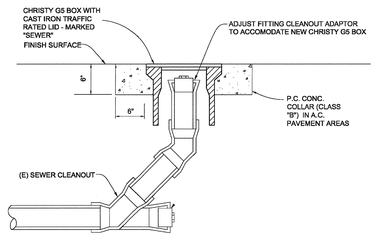

1 F SEWER CLEANOUT

SCALE: NTS

COUNTY OF SAN LUIS OBISPO DEPARTMENT OF GENERAL SERVICES
1087 SANTA ROSA STREET
SAN LUIS OBISPO, CA 93408
PHONE 805.781.5200

RAVATT ALBRECHT & ASSOCIATES, INC.
ARCHITECTURE ENGINEERING
ARCHITECTURE / INTERIORS
GREG RAVATT, AIA
MECHANICAL, ELECTRICAL
JIM ALBRECHT, PE
1051 PACIFIC STREET
SAN LUIS OBISPO CA 93401
PHONE 805.786.8381 (L.C.)
805.928.5002 (M.)
FAX 805.786.0792 (L.C.)
805.928.0969 (M.)
EMAIL RAVATTORCHARVATT@ALBRECHT.COM

kvc
CIVIL ENGINEERING & HYDROLOGY
Keith V. Crowe, P.E.
P.O. Box 832, Atascadero, CA 93423-0832
Phone & Fax: (805) 464-0975
KVCrowe@Charter.net

REGISTERED PROFESSIONAL ENGINEER
KEITH V. CROWE
Lic. No. 31,581
Expires 12/12
STATE OF CALIFORNIA

No.	Revision	Date
1	PLANCHECK REV1	09.26.12
2	PLANCHECK REV2	10.24.12

County Facility

ATASCADERO LIBRARY RENOVATION

5855 CAPISTRANO AVE.
ATASCADERO CA 93422

Project Manager M. DEMARTINI
Checked By
Client Approval
Date

CONTRACTOR SHALL VERIFY ALL DIMENSIONS AND (E) CONDITIONS PRIOR TO COMMENCING WORK. REPORT ANY DISCREPANCIES TO COUNTY PROJECT COORDINATOR OR TO THE PROJECT ARCHITECT.

Project Title : ATASCADERO LIBRARY RENOVATION
6555 CAPISTRANO AVE
ATASCADERO, CA 93422

Sheet Title : CONSTRUCTION DETAILS

Sheet Number
C4.0
of Sheets

PROJECT No. 417

FILE No.

BID SET 11.19.12

BID SET 03-26-13
BID SET 03-26-13

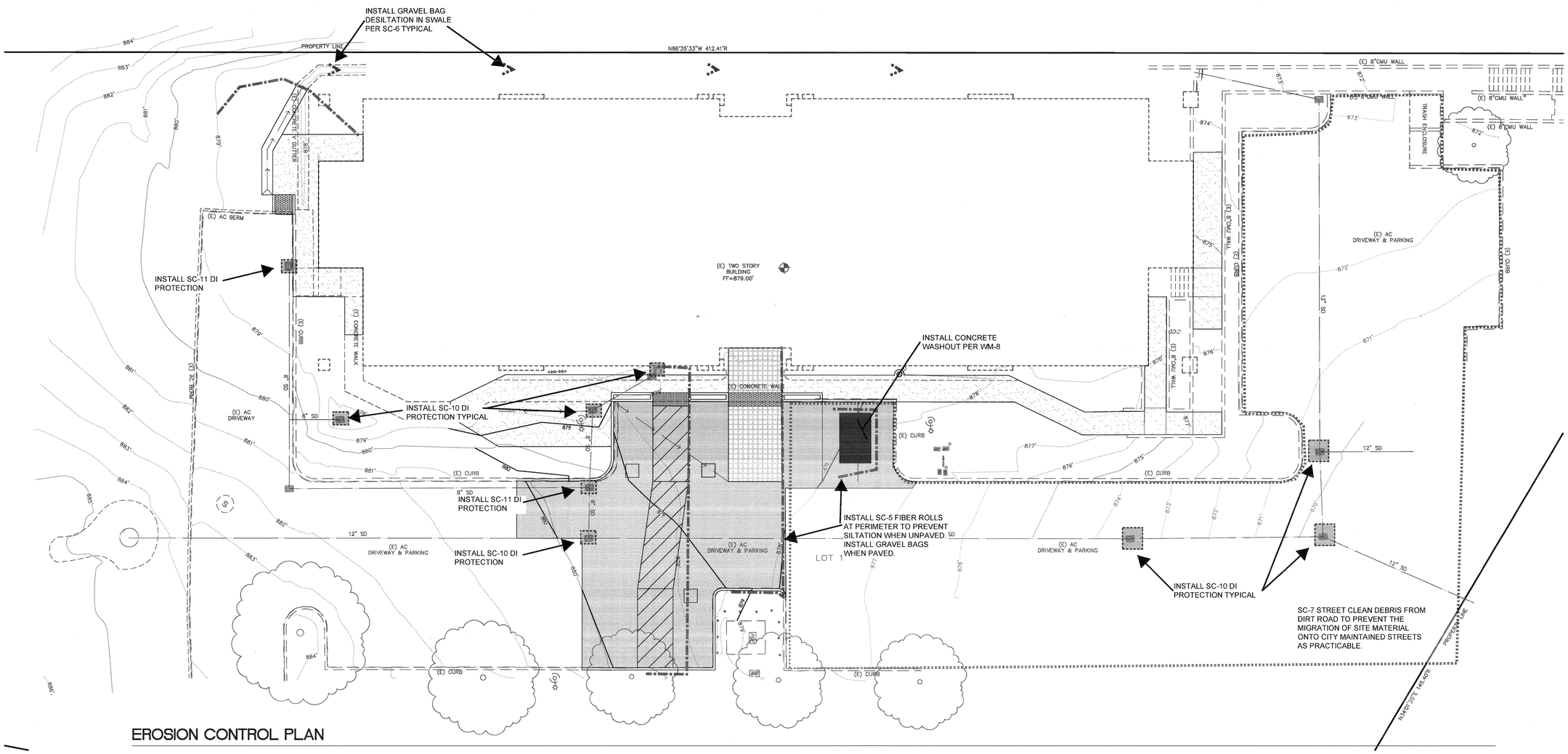

EROSION CONTROL PLAN

LEGEND

- SC-10 OR SC -11 STORM DRAIN INLET PROTECTION
- SC-6 GRAVEL BAG SILT TRAP
- SC-5 FIBER ROLLS OR GRAVEL BAGS - SEE PLAN
- SC-7 STREET SWEEPING AND VACCUMING
- WM-8 CONCRETE WASH OUT
- LANDSCAPING TO BE INSTALLED OR SS-4 HYDRAULIC MULCH / STRAW, BONDED FIBER MATRIX OR COCO MATS AS REQUIRED.

EROSION CONTROL NOTES:

1. ALL EROSION CONTROL NOTES ON DETAIL SHEETS SHALL APPLY TO THIS PLAN.
2. ALL PERIMETER PROTECTIONS I.E. SILT FENCING AND FIBER ROLLS ARE CONSIDERED PHASE ONE CONTROLS AND SHALL BE INSTALLED PRIOR TO THE BEGINNING OF WORK ON THE SITE AS PRACTICABLE.
3. GRAVEL BAGS AND FIBER ROLLS IN GRADED AREAS SHALL BE INSTALLED AS PRACTICABLE AND IN CONFORMANCE WITH RAIN CONDITIONS.
4. HYDROSEED, MULCH AND WIND PROTECTION MEASURES SHALL BE APPLIED IF AREAS ARE NOT TO RECEIVE FURTHER WORK WITH IN 14 DAYS.
5. PERMANENT HYDROSEED OR LANDSCAPING SHALL BE PLACED AFTER ALL GRADING WORK IS PERFORMED AND DEEMED COMPLETE. FIBER ROLLS MAY REMAIN IN PLACE AFTER WORK COMPLETION.
6. THE CONTRACTOR OF RECORD SHALL BE RESPONSIBLE CHARGE FOR THE INSTALLATION OF ALL EROSION CONTROL DEVICES.
7. ALL DETAILS FOR EROSION DEVICES ARE SHOWN ON DETAIL SHEETS.
8. HYDROMULCH, HYDROSEED AND OR WIND EROSION PREVENTION MEASURES PER BMP'S SC-3, 4 , 6 OR SC-1 SHALL BE PUT IN PLACE AS SOON AS PRACTICABLE. ALL STOCKPILES SHALL BE COVERED IN THE EVENT OF RAIN.
9. THE OWNER SHALL CONTRACT WITH THE EROSION CONTROL PLAN DEVELOPER GUDCMI TO TRAIN THE INSTALLERS AND PROVIDE INITIAL INSTALLATION INSPECTION OF THE EROSION CONTROL DEVICES.
10. THE ECP DEVELOPER IS NOT RESPONSIBLE FOR THE INSTALLATION OR PERFORMANCE OF THE EC DEVICES. THIS PLAN IS A LIVING DOCUMENT AND SHALL BE UPDATED BY THE INSTALLER AS TO WHEN DEVICES ARE INSTALLED AND MODIFICATION TO THE PLAN AS NECESSARY.

SCALE IN FEET
10 0 10 20

COUNTY OF SAN LUIS OBISPO
DEPARTMENT OF GENERAL SERVICES
1087 SANTA ROSA STREET
SAN LUIS OBISPO, CA 93408
PHONE: 805.781.5200

RAMATT ALBRIGHT & ASSOCIATES, INC.
ARCHITECTURE INTERIORS
ARCHITECTURE INTERIORS
GREG RAMATT, AIA
MECHANICAL, ELECTRICAL
JIM ALBRIGHT, PE
070 PACIFIC STREET
SAN LUIS OBISPO CA 93401
PHONE: 805.786.4358 (L.C.)
805.928.5002 (M.)
805.786.4792 (L.C.)
805.928.2095 (C.)
FAX:
EMAIL@OFFICE@RAMATTALBRIGHT.COM

kvc
CIVIL ENGINEERING & HYDROLOGY
Keith V. Crowe, P.E.
P.O. Box 830, Atascadero, CA 93423-0832
Phone & Fax: (805) 466-0875
KVCrowe@Charter.net

REGISTERED PROFESSIONAL ENGINEER KEITH V. CROWE Lic. No. 31,581 Expires 12/12 CIVIL STATE OF CALIFORNIA

No.	Revision	Date
1	PLANCHECK REV1	09.26.12
2	PLANCHECK REV2	10.24.12

County Facility

ATASCADERO LIBRARY RENOVATION

5855 CAPISTRANO AVE.
ATASCADERO CA 93422

Project Manager: M. DEMARTINI
Checked By:
Client Approval:
Date:

CONTRACTOR SHALL VERIFY ALL DIMENSIONS AND (E) CONDITIONS PRIOR TO COMMENCING WORK. REPORT ANY DISCREPANCIES TO COUNTY PROJECT COORDINATOR OR TO THE PROJECT ARCHITECT.

Project Title : ATASCADERO LIBRARY RENOVATION
5855 CAPISTRANO AVE.
ATASCADERO CA 93422

Sheet Title : EROSION CONTROL PLAN

Sheet Number
C5.0
of Sheets

PROJECT No. 417

FILE No.

BID SET 11.19.12

GENERAL EROSION NOTES:

1. PROHIBITION OF MOST NON-STORM WATER DISCHARGES

ONLY STORM WATER FROM THE PROJECT SITE SHALL BE ALLOWED TO FLOW INTO THE PUBLIC STREET SYSTEM. CLEAN, NON-CHLORINATED WATER FROM THE FLUSHING OF FIRE HYDRANTS, WATER MAINS, AND STORM DRAINS MAY BE DISCHARGED TO THE STREET IF IT IS NOT ALLOWED TO COLLECT DIRT, DEBRIS AND TRASH WHILE FLOWING TO THE STREET.

2. SOURCES OF STORM WATER POLLUTANTS

STORM WATER POLLUTANTS INCLUDE SOIL SEDIMENT AND NUTRIENTS, OIL, GREASE, TOXIC POLLUTANTS, HEAVY METALS, PAINT, AND STUCCO. SOURCES OF STORM WATER POLLUTANTS INCLUDE SOIL EROSION BY WATER AND/OR WIND; CLEARING OF VEGETATION; GRADING; VEHICLE AND EQUIPMENT REFUELING AND MAINTENANCE; WASHING OF CONCRETE TRUCKS, MIXERS AND HANDLING REQUIREMENT; PAINTS. SOLVENTS, ADHESIVES; LANDSCAPING WORK; ROOFING AND BUILDING MATERIALS; AND PETROLEUM PRODUCTS.

3. EROSION AND SEDIMENT CONTROLS

A. COVER EXPOSED STOCKPILES OF SOILS, CONSTRUCTION MATERIALS, AND LANDSCAPING MATERIALS WITH HEAVY PLASTIC SHEETING.

B. IN LANDSCAPING AREAS WHERE THE VEGETATION HAS NOT ESTABLISHED GROWTH AND TAKEN HOLD, CONSTRUCT SANDBAG OR DIRT BERM'S OR SILT FENCES AROUND THEIR PERIMETER TO INSURE THAT WATER WILL BE CONTAINED INSIDE THE LANDSCAPING AREA AND THAT IT WILL NOT BE CONVEYED TO A STORM DRAIN INLET.

C. RE-VEGETATE AREAS WHERE LANDSCAPING HAS DIED OR NOT TAKEN HOLD.

D. DIVERT STORM WATER RUNOFF AROUND DISTURBED SOILS WITH BERM'S OR DIRT SWALES.

4. OTHER CONTROLS

A. WASTE DISPOSAL

1. KEEP SOLID WASTE DISPOSAL CONTAINERS COVERED TO PREVENT ENTRY OF STORM WATER.

2. PROVIDE FOR THE WEEKLY (OR MORE FREQUENT, AS NECESSARY) DISPOSAL OF WASTE CONTAINERS.

3. PROVIDE CONTAINERS AT CONVENIENT LOCATIONS AROUND THE SITE.

B. SWEEPING OF SITE

1. PROVIDE WEEKLY (OR MORE FREQUENT, AS NECESSARY) SWEEPING BY HAND OR MECHANICAL MEANS TO KEEP THE PAVED AREAS OF THE SITE FREE OF DUST, DIRT, AND DEBRIS.

2. DISPOSE OF ACCUMULATED DIRT IN WASTE CONTAINERS, OR HAUL IT OFF THE SITE TO A LANDFILL.

C. SANITARY SEPTIC DISPOSAL

PORTABLE TOILETS AND OTHER SANITARY FACILITIES SHALL BE SERVICED WEEKLY (OR MORE FREQUENT, AS NECESSARY) AND PUMPED CLEAN BY A WASTE DISPOSAL COMPANY. NO TOXIC OR HAZARDOUS WASTES SHALL BE DISPOSED OF IN A PORTABLE TOILET OR IN THE ON-SITE SANITARY SEWER.

D. SPILLS

1. STORE ADEQUATE ABSORBENT MATERIAL, RAGS, BROOMS, SHOVELS, AND WASTE CONTAINERS ON THE SITE TO CLEAN-UP SPILLS OR MATERIALS SUCH AS FUEL, PAINT SOLVENTS, OR CLEANERS. CLEAN UP MINOR SPILLS IMMEDIATELY.

2. FOR REPORTABLE QUANTITIES OF A HAZARDOUS OR TOXIC SUBSTANCES, SECURE THE SERVICES OF QUALIFIED PERSONNEL FOR CLEAN-UP AND DISPOSAL.

E. CONTROL OF ALLOWABLE NON-STORM WATER DISCHARGES

LANDSCAPING IRRIGATION, EROSION CONTROL MEASURES, PIPE FLUSHING AND TESTING PAVEMENT WASHING, AND DE-WATERING ARE ALLOWED IF THEY CANNOT FEASIBLY BE ELIMINATED, COMPLY WITH THIS PLAN, DO NOT CAUSE OR CONTRIBUTE TO A VIOLATION OF WATER QUALITY STANDARDS, AND ARE NOT REQUIRED TO BE PERMITTED BY THE LOCAL REGIONAL WATER QUALITY CONTROL BOARD.

F. VEHICLES AND EQUIPMENT

1. FIX LEAKS OF FUEL, OIL, AND OTHER SUBSTANCES IMMEDIATELY.

2. PERFORM REFUELING AND SERVICE OF VEHICLES OR EQUIPMENT OFF-SITE WHEN POSSIBLE. IF REFUELING OR SERVICE OF EQUIPMENT IS PERFORMED ON-SITE, THEN PROVIDE AN IMPERVIOUS, CONTAINED AREA WHERE ANY SPILLS CAN BE CONTAINED WITHOUT FLOWING TO A STORM WATER INLET OR INTO THE GROUND.

3. USE DRIP PANS TO CATCH LEAKS AND SMALL SPILLS.

G. CONCRETE TRUCKS, MIXERS, AND HAULING EQUIPMENT

1. DISPOSE OF WASHOUT FROM THE WASHING OF CONCRETE TRUCKS AT ASSIGNED WASHOUT AREAS.

2. PROVIDE A HOLDING TANK TO RECEIVE ANY WASHOUT FROM CONCRETE EQUIPMENT. DISPOSAL OF TANK CONTENTS SHOULD BE CONDUCTED BY A WASTE HAULING FIRM.

3. PROVIDE A DESIGNATED AREA FOR WASHING ANY VEHICLES OR EQUIPMENT; DRAINAGE FROM THIS AREA SHOULD FLOW TO THE HOLDING TANK.

H. LANDSCAPING OPERATIONS

1. USE ONLY THE MINIMUM AMOUNT OF LANDSCAPING FERTILIZERS, NUTRIENTS, AND OTHER CHEMICALS THAT ARE NEEDED.

2. DO NO OVER WATER FERTILIZED OR TREATED LANDSCAPE AREAS, MINIMIZE RUNOFF OF IRRIGATION WATER FROM LANDSCAPING.

I. STORM WATER INLETS

KEEP ALL ON-SITE STORM WATER INLETS CLEAN AND FREE OF DIRT, SILT, AND DEBRIS, ETC. IN THE EVENT THAT SEDIMENT AND DEBRIS MAY FLOW TO AN INLET, PROVIDE A 6-INCH (MINIMUM) SANDBAG BERM AROUND THE INLET TO TRAP THE DIRT AND DEBRIS AND ALLOW ONLY CLEAN STORM WATER TO ENTER THE INLET (EROSION CONTROL PLAN).

5. INSPECTION BY CONTRACTOR & ENGINEER OF RECORD

A. REGULAR INTERVAL INSPECTION AND INSPECTION BEFORE AND AFTER STORM

1. VISUALLY INSPECT THE SITE WEEKLY TO INSURE THAT STORM WATER INLETS ARE FREE OF DIRT AND DEBRIS.

2. BEFORE A STORM, INSPECT THE SITE TO INSURE THAT STORM WATER POLLUTION CONTROL MEASURES ARE IN PLACE.

3. AFTER A STORM, INSPECT ALL STORM WATER INLETS TO INSURE THAT THEY ARE CLEAR OF DIRT AND DEBRIS. CLEAN THOSE STORM WATER INLETS THAT ARE NOT CLEAR AND FREE OF DEBRIS.

4. THE REGIONAL WATER BOARD MAY REQUIRE THE DISCHARGER TO CONDUCT ADDITIONAL SITE INSPECTIONS, SUBMIT REPORTS AND CERTIFICATIONS, OR TO PERFORM SAMPLING AND ANALYSIS.

5. THE DISCHARGER (PERMITTEE) IS REQUIRED TO CONDUCT INSPECTION OF THE CONSTRUCTION SITE PRIOR TO ANTICIPATED STORM EVENTS AND AFTER ACTUAL STORM EVENTS TO IDENTIFY AREAS CONTRIBUTING TO A STORM WATER DISCHARGE AND TO EVALUATE WHETHER MEASURES TO REDUCE POLLUTANT LOADINGS IDENTIFIED IN THE SWPPP ARE ADEQUATE AND PROPERLY IMPLEMENTED IN ACCORDANCE WITH THE TERMS OF THE GENERAL PERMIT AND WHETHER ADDITIONAL CONTROL PRACTICES ARE NEEDED.

GENERAL EROSION NOTES: (CONTINUED)

6. MAINTENANCE OF CONTROLS

A. MAINTENANCE AND REPAIR

ALL CONTROLS AND MEASURES INDICATED ON THIS PLAN SHOULD BE MAINTAINED IN GOOD AND EFFECTIVE CONDITION BY THE CONTRACTOR. IF ANY CONTROL OF MEASURES ARE DAMAGED OR REMOVED, THEY SHOULD BE PROMPTLY REPAIRED OR RESTORED.

B. PLAN REVISIONS

IF CONSTRUCTION ACTIVITY OR CONDITIONS CHANGE FROM THOSE SHOWN IN THIS PLAN THEN THIS PLAN SHOULD BE REVISED TO REFLECT THE CURRENT CONDITIONS.

7. FINAL STABILIZATION AND POST-CONSTRUCTION CONTROLS

A. AFTER CONSTRUCTION HAS BEEN COMPLETED, THE SITE SHALL BE SWEPT CLEAN, STORM WATER INLETS (GRATES AND BASIN) SHALL BE CLEANED, AND ALL WASTE AND LEFTOVER MATERIALS SHALL BE REMOVED FROM THE SITE.

B. ALL LANDSCAPING AND PLANTING AREAS SHOULD BE WELL MAINTAINED TO PREVENT EROSION. AVOID OVER-WATERING OF LANDSCAPING.

C. ALL PAVED AREAS SHOULD BE SWEPT WEEKLY EITHER BY HAND OR BY MECHANICAL MEANS TO KEEP THE SITE CLEAR OF DIRT, DUST, AND DEBRIS.

D. WASTE MATERIALS ON-SITE SHOULD BE STORED IN COVERED CONTAINERS WHICH ARE CLEANED OUT REGULARLY.

E. TESTING OF FIRE HYDRANTS ON-SITE SHALL NOT BE CONDUCTED UNTIL THE AREA WHERE THE WATER DISCHARGES HAS BEEN SWEPT CLEAN OF DIRT AND DEBRIS.

F. STORM DRAIN LINES SHOULD BE CHECKED AND CLEANED ANNUALLY TO KEEP THEM CLEAN AND CLEAR OF DEBRIS.

G. ALL ON-SITE STORM WATER INLETS SHOULD BE CLEARLY MARKED WITH 4" BLUE LETTERS ON WHITE FIELD "STORM WATER ONLY, THIS DRAINS TO THE OCEAN".

8. ALL CONSTRUCTION ACTIVITIES INCLUDING GRADING, VEGETATION REMOVAL, STOCKPILING, EQUIPMENT STORAGE ETC. SHALL REMAIN OUTSIDE OF THE 20-FOOT CREEK SETBACK LINE AT ALL TIMES UNLESS AN EXCEPTION FOR SUCH CONSTRUCTION HAS BEEN APPROVED BY THE COMMUNITY DEVELOPMENT DEPARTMENT. THE CREEK SETBACK LINE SHALL BE ESTABLISHED BY THE CITY'S NATURAL RESOURCE MANAGER AND MARKED IN THE FIELD. THE SETBACK AREA SHALL BE FENCED WITH ORANGE CONSTRUCTION FENCING, AND SHALL BE IN PLACE PRIOR TO THE BEGINNING OF CONSTRUCTION AND THROUGHOUT THE DURATION OF CONSTRUCTION.

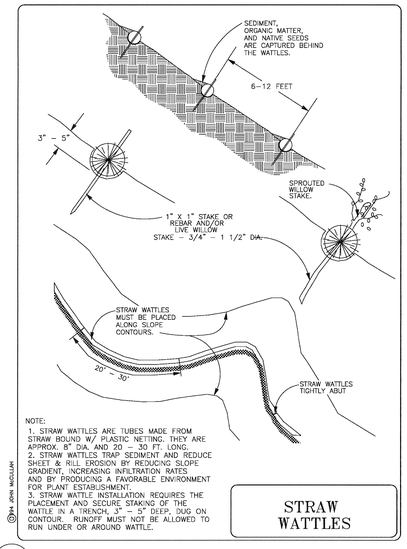

SC-5 FIBER ROLL INSTALLATION

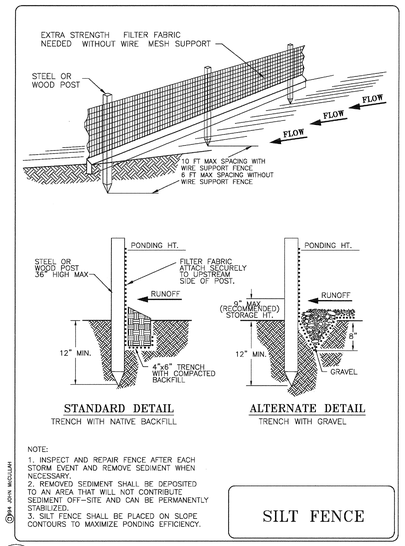

SC-1 SILT FENCE INSTALLATION - IF REQUIRED 2

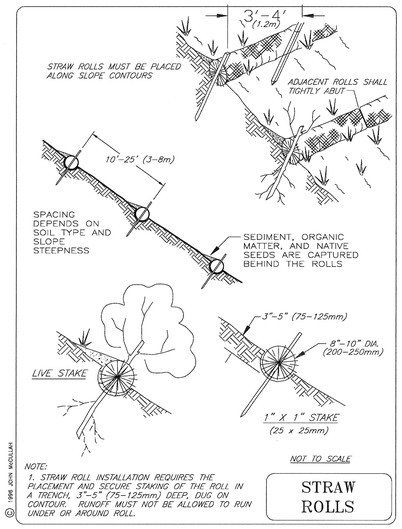

SC-5 FIBER ROLL INSTALLATION

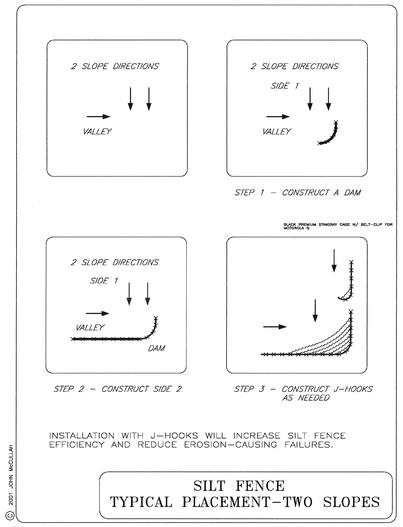

SC-1 SILT FENCE INSTALLATIO - IF REQUIRED 2

COUNTY OF SAN LUIS OBISPO
DEPARTMENT OF GENERAL SERVICES
1087 SANTA ROSA STREET
SAN LUIS OBISPO, CA 93408
PHONE 805.781.5200

RAVATT ALBRECHT & ASSOCIATES, INC. ARCHITECTURE/ENGINEERING
ARCHITECTURE INTERIORS
GEORGE RAVATT, AIA
MECHANICAL ELECTRICAL
JIM ALBRECHT, PE
1171 PACIFIC STREET
SAN LUIS OBISPO, CA 93401
PHONE 805.786.8191 (L.C.)
805.928.5302 (SM.)
FAX: 805.786.8792 (L.C.)
805.928.0395 (SM.)
EMAIL: RAVATT@CHARTER.NET, JIM@RAVATTALBRECHT.COM

kvc
CIVIL ENGINEERING & HYDROLOGY
Keith V. Crowe, P.E.
P.O. Box 832, Atascadero, CA 93423-0832
Phone & Fax: (805) 464-0975
KVCrowe@Charter.net

REGISTERED PROFESSIONAL ENGINEER
KEITH V. CROWE
Lic. No. 31,581
Expires 12/12
STATE OF CALIFORNIA

No.	Revision	Date
1	PLANCHECK REV1	09.26.12
2	PLANCHECK REV2	10.24.12

County Facility

ATASCADERO LIBRARY RENOVATION

5855 CAPISTRANO AVE.
ATASCADERO CA 93422

Project Manager M. DEMARTINI
Checked By
Client Approval
Date

CONTRACTOR SHALL VERIFY ALL DIMENSIONS AND (E) CONDITIONS PRIOR TO COMMENCING WORK. REPORT ANY DISCREPANCIES TO COUNTY PROJECT COORDINATOR OR TO THE PROJECT ARCHITECT.

Project Title : ATASCADERO LIBRARY RENOVATION
5855 CAPISTRANO AVE.
ATASCADERO CA 93422

Sheet Title : EROSION CONTROL NOTES AND DETAILS

Sheet Number
C6.0
of Sheets

PROJECT No. 417

FILE No.

BID SET 11.19.12

Concrete Waste Management WM-8

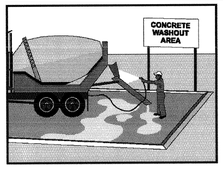

Objectives

- EC Erosion Control
- SE Sediment Control
- TC Tracking Control
- WE Wind Erosion Control
- NS Non-Stormwater Management Control
- WM Waste Management and Materials Pollution Control ☑

Legend:
☑ Primary Objective
☒ Secondary Objective

Targeted Constituents

- Sediment ☑
- Nutrients
- Trash
- Metals ☑
- Bacteria
- Oil and Grease
- Organics

Potential Alternatives

None

Description and Purpose
Prevent or reduce the discharge of pollutants to stormwater from concrete waste by conducting washout offsite, performing onsite washout in a designated area, and training employee and subcontractors.

Suitable Applications
Concrete waste management procedures and practices are implemented on construction projects where:

- Concrete is used as a construction material or where concrete dust and debris result form demolition activities
- Slurries containing portland cement concrete (PCC) or asphalt concrete (AC) are generated, such as from saw cutting, coring, grinding, grooving, and hydro-concrete demolition
- Concrete trucks and other concrete-coated equipment are washed onsite
- Mortar-mixing stations exist
- See also NS-8, Vehicle and Equipment Cleaning

Limitations
- Offsite washout of concrete wastes may not always be possible.

WM-8 CONCRETE WASTE MANAGEMENT

Gravel Bag Berm SE-6

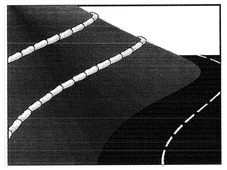

Objectives

- EC Erosion Control ☒
- SE Sediment Control ☑
- TR Tracking Control
- WE Wind Erosion Control
- NS Non-Stormwater Management Control
- WM Waste Management and Materials Pollution Control

Legend:
☑ Primary Objective
☒ Secondary Objective

Targeted Constituents

- Sediment ☑
- Nutrients
- Trash
- Metals
- Bacteria
- Oil and Grease
- Organics

Potential Alternatives

- SE-1 Silt Fence
- SE-5 Fiber Roll
- SE-8 Sandbag Barrier
- SE-9 Straw Bale Barrier

Description and Purpose
A gravel bag berm is a series of gravel-filled bags placed on a level contour to intercept sheet flows. Gravel bags pond sheet flow runoff, allowing sediment to settle out, and release runoff slowly as sheet flows, preventing erosion.

Suitable Applications
Gravel bag berms may be suitable:

- As a linear sediment control measure:
  - Below the toe of slopes and erodible slopes
  - As sediment traps at culvert/pipe outlets
  - Below other small cleared areas
  - Along the perimeter of a site
  - Down slope of exposed soil areas
  - Around temporary stockpiles and spoil areas
  - Parallel to a roadway to keep sediment off paved areas
  - Along streams and channels
- As linear erosion control measure:

SC-6 GRAVEL BAG INSTALLATION

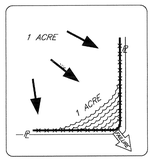

Incorrect – Do Not layout "perimeter control" silt fences along property lines. All sediment laden runoff will concentrate and overwhelm the system.

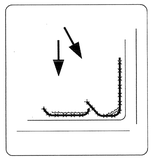

Correct – Install J-hooks

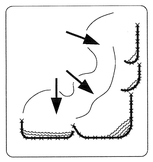

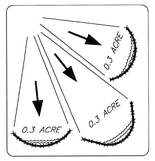

Discreet segments of silt fence, installed with J-hooks or 'smiles' will be much more effective.

SILT FENCE PLACEMENT FOR PERIMETER CONTROL

FILE: SF-PERIMETER CONTROL

SC-1 SILT FENCE INSTALLATION - IF REQUIRED

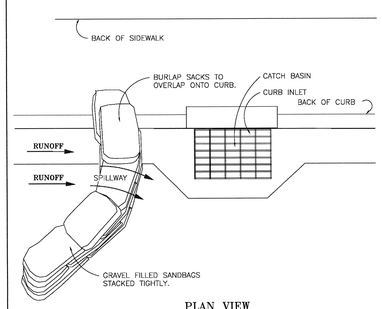

PLAN VIEW

NOTES:
1. PLACE CURB TYPE SEDIMENT BARRIERS ON GENTLY SLOPING STREET SEGMENTS, WHERE WATER CAN POND AND ALLOW SEDIMENT TO SEPARATE FROM RUNOFF.
2. SANDBAGS OF EITHER BURLAP OR WOVEN 'GEOTEXTILE' FABRIC, ARE FILLED WITH GRAVEL LAYERED AND PACKED TIGHTLY.
3. LEAVE A ONE SANDBAG GAP IN THE TOP ROW TO PROVIDE A SPILLWAY FOR OVERFLOW.
4. INSPECT BARRIERS AND REMOVE SEDIMENT AFTER EACH STORM EVENT. SEDIMENT AND GRAVEL MUST BE REMOVED FROM THE TRAVELLED WAY IMMEDIATELY.

CURB AND GUTTER SEDIMENT BARRIER

FILE: SEDM11

SC-6 GRAVEL BAG BARRIER DETAIL

Stockpile Management WM-3

Objectives

- EC Erosion Control
- SE Sediment Control
- TC Tracking Control
- WE Wind Erosion Control
- NS Non-Stormwater Management Control
- WM Waste Management and Materials Pollution Control ☑

Legend:
☑ Primary Objective
☒ Secondary Objective

Targeted Constituents

- Sediment ☑
- Nutrients ☑
- Trash ☑
- Metals ☑
- Bacteria
- Oil and Grease ☑
- Organics ☑

Potential Alternatives

None

Description and Purpose
Stockpile Management procedures and practices are designed to reduce or eliminate air and stormwater pollution from stockpiles of soil, paving materials such as portland cement concrete (PCC) rubble, asphalt concrete (AC), asphalt concrete rubble, aggregate base, aggregate sub base or pre-mixed aggregate, asphalt minder (so called "cold mix" asphalt), and pressure treated wood.

Suitable Applications
Implement in all projects that stockpile soil and other materials.

Limitations
None identified.

Implementation
Protection of stockpiles is a year-round requirement. To properly manage stockpiles:

- Locate stockpiles a minimum of 50 ft away from concentrated flows of stormwater, drainage courses, and inlets.
- Protect all stockpiles from stormwater runon using a temporary perimeter sediment barrier such as berms, dikes, fiber rolls, silt fences, sandbag, gravel bags, or straw bale barriers.

WM-3 STOCKPILE MANAGEMENT

Street Sweeping and Vacuuming SE-7

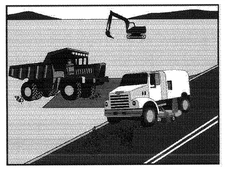

Objectives

- EC Erosion Control
- SE Sediment Control ☒
- TR Tracking Control ☑
- WE Wind Erosion Control
- NS Non-Stormwater Management Control
- WM Waste Management and Materials Pollution Control

Legend:
☑ Primary Objective
☒ Secondary Objective

Targeted Constituents

- Sediment ☑
- Nutrients
- Trash ☑
- Metals
- Bacteria
- Oil and Grease ☑
- Organics

Potential Alternatives

None

Description and Purpose
Street sweeping and vacuuming includes use of self-propelled and walk-behind equipment to remove sediment from streets and roadways, and to clean paved surfaces in preparation for final paving. Sweeping and vacuuming prevents sediment from the project site from entering storm drains or receiving waters.

Suitable Applications
Sweeping and vacuuming are suitable anywhere sediment is tracked from the project site onto public or private paved streets and roads, typically at points of egress. Sweeping and vacuuming are also applicable during preparation of paved surfaces for final paving.

Limitations
Sweeping and vacuuming may not be effective when sediment is wet or when tracked soil is caked (caked soil may need to be scraped loose).

Implementation

- Controlling the number of points where vehicles can leave the site will allow sweeping and vacuuming efforts to be focused, and perhaps save money.
- Inspect potential sediment tracking locations daily.
- Visible sediment tracking should be swept or vacuumed on a daily basis.

SC-7 STREET SWEEPING AND VACUUMING

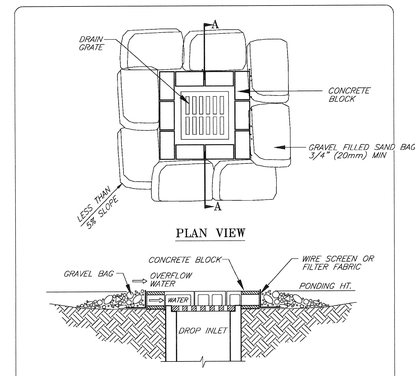

PLAN VIEW

SECTION A – A

NOTES:
1. DROP INLET SEDIMENT BARRIERS ARE TO BE USED FOR SMALL, NEARLY LEVEL DRAINAGE AREAS. (LESS THAN 5%)
2. EXCAVATE A BASIN OF SUFFICIENT SIZE ADJACENT TO THE DROP INLET.
3. THE TOP OF THE STRUCTURE (PONDING HEIGHT) MUST BE WELL BELOW THE GROUND ELEVATION DOWNSLOPE TO PREVENT RUNOFF FROM BYPASSING THE INLET. A TEMPORARY DIKE MAY BE NECESSARY ON THE DOWNSLOPE SIDE OF THE STRUCTURE.

BLOCK AND GRAVEL BAG DROP INLET SEDIMENT BARRIER

FILE: BOSEDBAR

SC-10 STORM DRAIN PROTECTION

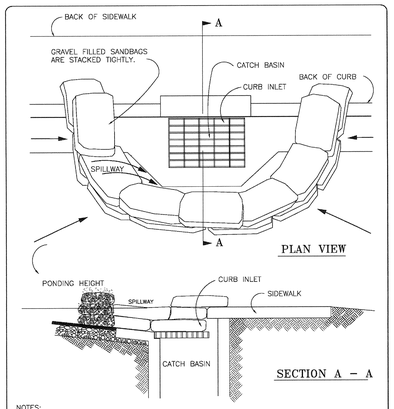

PLAN VIEW

SECTION A – A

NOTES:
1. PLACE CURB TYPE SEDIMENT BARRIERS ON GENTLY SLOPING STREET SEGMENTS, WHERE WATER CAN POND AND ALLOW SEDIMENT TO SEPARATE FROM RUNOFF.
2. SANDBAGS, OF EITHER BURLAP OR WOVEN GEOTEXTILE FABRIC, ARE FILLED WITH GRAVEL, LAYERED AND PACKED TIGHTLY.
3. LEAVE ONE SANDBAG GAP IN THE TOP ROW TO PROVIDE A SPILLWAY FOR OVERFLOW.
4. INSPECT BARRIERS AND REMOVE SEDIMENT AFTER EACH STORM EVENT. SEDIMENT AND GRAVEL MUST BE REMOVED FROM THE TRAVELED WAY IMMEDIATELY.

CURB INLET SEDIMENT BARRIER

FILE: SEDM10

SC-11 STORM DRAIN PROTECTION

COUNTY OF SAN LUIS OBISPO
DEPARTMENT OF GENERAL SERVICES
1087 SANTA ROSA STREET
SAN LUIS OBISPO, CA 93408
PHONE 805.781.5200

Atascadero Library

RAA RAVATT ALBRECHT & ASSOCIATES, INC. ARCHITECTURE ENGINEERING
ARCHITECTURE, INTERIORS
CIVIL/SURVEY, HA
MECHANICAL, ELECTRICAL
FIRE ALARM, SECURITY
1570 PACIFIC STREET
SAN LUIS OBISPO, CA 93401
PHONE: 805.786.4300 X.0
805.786.4302 X.0
FAX: 805.786.4302 X.0
805.786.4303 X.0
EMAIL: OFFICE@RAVATT-ALBRECHT.COM

kvc
CIVIL ENGINEERING & HYDROLOGY
Keith V. Crowe, P.E.
P.O. Box 832, Atascadero, CA 93423-0832
Phone & Fax: (805) 464-0275
KVCrowe@Charter.net

REGISTERED PROFESSIONAL ENGINEER KEITH V. CROWE Lic. No. 31,581 Expires 12/13 CIVIL STATE OF CALIFORNIA

No.	Revision	Date
1	PLANCHECK REV1	09.26.12
2	PLANCHECK REV2	10.24.12

County Facility

ATASCADERO LIBRARY RENOVATION
5855 CAPISTRANO AVE.
ATASCADERO CA 93422

Project Manager: M. DEMARTINI
Checked By:
Client Approval:
Date:

CONTRACTOR SHALL VERIFY ALL DIMENSIONS AND (E) CONDITIONS PRIOR TO COMMENCING WORK. REPORT ANY DISCREPANCIES TO COUNTY PROJECT COORDINATOR OR TO THE PROJECT ARCHITECT.

Project Title: ATASCADERO LIBRARY RENOVATION
5855 CAPISTRANO AVE.
ATASCADERO CA 93422

Sheet Title: EROSION CONTROL DETAILS

Sheet Number
C7.0
of Sheets

PROJECT No. 417

FILE No.

BID SET 11.19.12

BID SET 03-26-13
BID SET 03-26-13

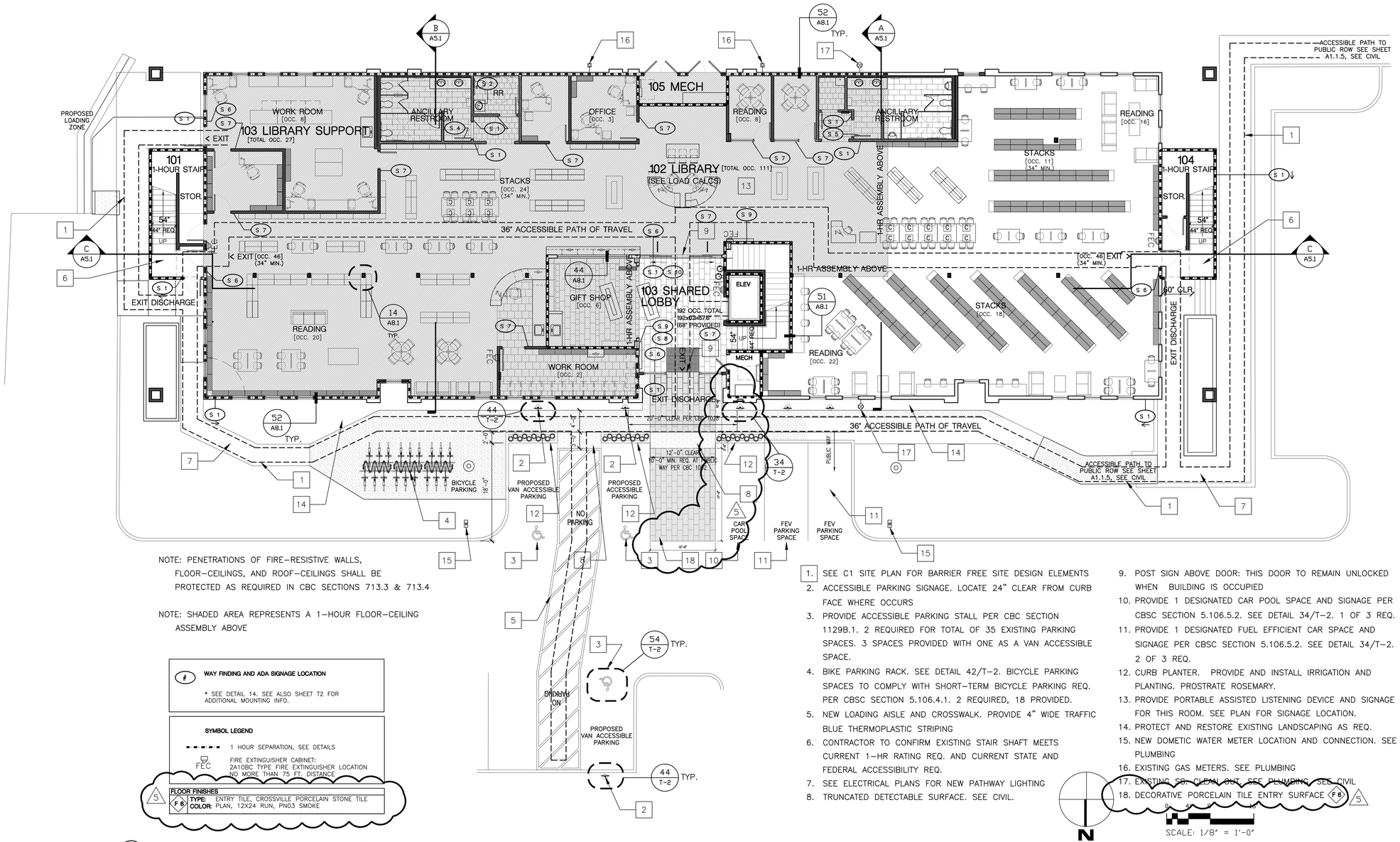

NOTE: PENETRATIONS OF FIRE-RESISTIVE WALLS, FLOOR-CEILINGS, AND ROOF-CEILINGS SHALL BE PROTECTED AS REQUIRED IN CBC SECTIONS 713.3 & 713.4

NOTE: SHADED AREA REPRESENTS A 1-HOUR FLOOR-CEILING ASSEMBLY ABOVE

(#) WAY FINDING AND ADA SIGNAGE LOCATION

* SEE DETAIL 14, SEE ALSO SHEET T2 FOR ADDITIONAL MOUNTING INFO.

SYMBOL LEGEND

1 HOUR SEPARATION, SEE DETAILS

FEC — FIRE EXTINGUISHER CABINET: 2A10BC TYPE FIRE EXTINGUISHER LOCATION NO MORE THAN 75 FT. DISTANCE

5 — FLOOR FINISHES — F6 — TYPE: ENTRY TILE, CROSSVILLE PORCELAIN STONE TILE; COLOR: PLAN, 12X24 RUN, PN03 SMOKE

1. SEE C1 SITE PLAN FOR BARRIER FREE SITE DESIGN ELEMENTS
2. ACCESSIBLE PARKING SIGNAGE. LOCATE 24" CLEAR FROM CURB FACE WHERE OCCURS
3. PROVIDE ACCESSIBLE PARKING STALL PER CBC SECTION 1129B.1. 2 REQUIRED FOR TOTAL OF 35 EXISTING PARKING SPACES. 3 SPACES PROVIDED WITH ONE AS A VAN ACCESSIBLE SPACE.
4. BIKE PARKING RACK. SEE DETAIL 42/T-2. BICYCLE PARKING SPACES TO COMPLY WITH SHORT-TERM BICYCLE PARKING REQ. PER CBSC SECTION 5.106.4.1. 2 REQUIRED, 18 PROVIDED.
5. NEW LOADING AISLE AND CROSSWALK. PROVIDE 4" WIDE TRAFFIC BLUE THERMOPLASTIC STRIPING
6. CONTRACTOR TO CONFIRM EXISTING STAIR SHAFT MEETS CURRENT 1-HR RATING REQ. AND CURRENT STATE AND FEDERAL ACCESSIBILITY REQ.
7. SEE ELECTRICAL PLANS FOR NEW PATHWAY LIGHTING
8. TRUNCATED DETECTABLE SURFACE. SEE CIVIL.
9. POST SIGN ABOVE DOOR: THIS DOOR TO REMAIN UNLOCKED WHEN BUILDING IS OCCUPIED
10. PROVIDE 1 DESIGNATED CAR POOL SPACE AND SIGNAGE PER CBSC SECTION 5.106.5.2. SEE DETAIL 34/T-2. 1 OF 3 REQ.
11. PROVIDE 1 DESIGNATED FUEL EFFICIENT CAR SPACE AND SIGNAGE PER CBSC SECTION 5.106.5.2. SEE DETAIL 34/T-2. 2 OF 3 REQ.
12. CURB PLANTER. PROVIDE AND INSTALL IRRIGATION AND PLANTING. PROSTRATE ROSEMARY.
13. PROVIDE PORTABLE ASSISTED LISTENING DEVICE AND SIGNAGE FOR THIS ROOM. SEE PLAN FOR SIGNAGE LOCATION.
14. PROTECT AND RESTORE EXISTING LANDSCAPING AS REQ.
15. NEW DOMETIC WATER METER LOCATION AND CONNECTION. SEE PLUMBING
16. EXISTING GAS METERS. SEE PLUMBING
17. EXISTING SS. CLEAN OUT. SEE PLUMBING, SEE CIVIL
18. DECORATIVE PORCELAIN TILE ENTRY SURFACE (F6) 5

SCALE: 1/8" = 1'-0"

1 SITE PLAN, FIRE PROTECTION, FIRST STORY

CODE ANALYSIS 2010 CBC

OCCUPANCY:	A-3 LIBRARY, B OFFICE
STORIES:	2
ELEVATOR:	1 (1-HR RATED)
BUILDING CONSTRUCTION:	CONVENTIONAL WOOD FRAMED
ALLOWABLE BUILDING HIEGHT:	55'-0"
BUILDING HIEGHT:	32'-0"
PARKING SPACES:	35 EXISTING
2 ACCESSIBLE PARKING SPACES REQUIRED:	3 PROVIDED WITH ONE AS A VAN ACCESSIBLE SPACE

BUILDING AREA

LOWER FLOOR:	10,950 SQ.FT.
UPPER FLOOR:	10,950 SQ.FT.
TOTAL AREA	21,900 SQ.FT.

ALLOWABLE AREA CALCULATIONS

	GROUP	TYPE CONSTRUCTION	STORIES	AREA	SPRINKLERED
CBC TABLE 503	A-3 LIBRARY	V-A	1	11,500 PER STORY	YES
TOTAL ALLOWABLE BUILDING AREA			2	23,000 SQ.FT.	> 21,900 SQ.FT.

OCCUPANCY SEPARATIONS

CBC TABLE 508.4 1-HR SEPARATION BETWEEN A-3 AND B OCCUPANCIES FOR A SPRINKLERED BUILDING

OCCUPANCY LOAD CALCULATIONS

AREA #		LIBRARY SQ.FT.	COUNTY SQ.FT.	ANCILLARY	USE	FUNCTION	FAPO	OCC. LOAD	#EXITS REQ	#EXITS PROV.	SEPARATION
	FIRST STORY										
101	COUNTY STAIR	58	182		B						1-HR
102	LIBRARY	6,936		(646)	A-3	LIBRARY	100 STACKS/ 50 READING	111	2	3	–
103	LIBRARY SUPPORT	2,476			A-3	BUSINESS	100	25			
104	SHARED LOBBY	231	108		A-3			ANCILLARY			
105	LIBRARY STAIR	240			A-3			ANCILLARY			1-HR
106	MECHANICAL	50	23		B			ANCILLARY			
	SECOND STORY										
201	COUNTY STAIR	84			B						1-HR
202	COUNTY OFFICE		3,400	(509)	B	BUSINESS	100	34	2	2	1-HR
203	COUNTY SUPPORT		690	(509)	B	BUSINESS	15	34	1	2	1-HR
204	COUNTY LOBBY		293		B		15	20	1	1	
205	SHARED LOBBY	1,030	484		A-3			ANCILLARY			
206	LIBRARY SUPPORT	690		(560)	A-3	ASSEMBLY	15	46	1	1	–
207	COMMUNITY ROOM	1,300			A-3	ASSEMBLY	7	186	2	2	–
208	LIBRARY STAIR	N/A			A-3			ANCILLARY			1-HR

RESTROOM FIXTURE COUNT PER 2010 CPC TITLE 24 PART 5 TABLE 4.1

TYPE	LOCATION	SIZE	FAPO	M/F	#WC	#U	#LAV	#DF
GROUP A, LIBRARY	1ST FLOOR	6,936 SQ.FT.						
GROUP A, COMMUNITY ROOM	2ND FLOOR	1,300 SQ.FT.						
(NO FIXED SEATING)	TOTAL	8,236 SQ.FT.	30	138/138	2/8	2	2/2	1
GROUP B, EMPLOYEE USE	2ND FLOOR	4,090 SQ.FT.	200	11/11	1/1	1	1/1	1

CODE ANALYSIS

SCALE: N.T.S.

34 A1.1

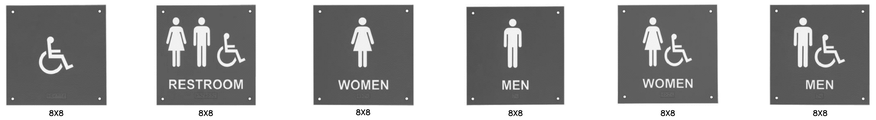

8X8 S 1 PART#: BF683 | 8X8 S 2 PART#: BF689 | 8X8 S 3 PART#: BF685 | 8X8 S 3 PART#: BF684 | 8X8 S 4 PART#: BF688 | 8X8 S 5 PART#: BF687

THE INTERNATIONAL SYMBOL OF ACCESSIBILITY IS REQUIRED ON:

1. ACCESSIBLE ENTRANCES (INACCESSIBLE ENTRANCES SHALL HAVE DIRECTIONAL SIGNAGE TO INDICATE THE ROUTE TO THE NEAREST ACCESSIBLE ENTRANCE).
2. ACCESSIBLE TOILET AND BATHING FACILITIES.
3. SIGNS SHALL BE ROCKWOOD, BF SERIES, METAL, DARK BRONZE D3, WITH WHITE TACTILE LETTERING AND BRAILLE SUBTITLING. MOUNT SIGN AT 60" CL FROM FF/ TYPICAL
4. DIRECTORY SIGN SHALL BE PRINTED CLEAR ACRYLIC ON STAND OFFS. CLEARPATH SIGNAGE SYSTEMS, MIX ALU, SATIN ALUMINUM FINISH.
5. PROVIDE ASSISTED LISTENING SIGNAGE AS REQUIRED PER DETAIL 34/A1.2. SEE PLAN FOR LOCATIONS. (S10)

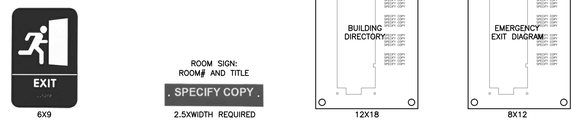

6X9 S 6 PART#: BFM682

ROOM SIGN: ROOM# AND TITLE — SPECIFY COPY — 2.5XWIDTH REQUIRED S 7 PART#: BF680

12X18 S 8 PART#: MIX ALU | 8X12 S 9 PART#: MIX ALU

ROOM AND WAY FINDING SIGNAGE

SCALE: N.T.S.

14 A1.1

COUNTY OF SAN LUIS OBISPO DEPARTMENT OF GENERAL SERVICES
1087 SANTA ROSA STREET
SAN LUIS OBISPO, CA 93408
PHONE 805.781.5200

RAVART SCHECHT & ASSOCIATES, INC. ARCHITECTURE ENGINEERING
MECHANICAL/ELECTRICAL/PLUMBING: GREG RAVART, MA; MECHANICAL: K. ELL, TEE, M; JIM ALBRECHT, PE
1570 PACIFIC STREET SAN LUIS OBISPO, CA 93401
PHONE: 805.786.4300 805.543.5300
FAX: 805.786.4792 805.543.5301
EMAIL: INFO@RAVARTSCHECHT.COM

REGISTERED ARCHITECT GREGORY ALLEN RAVART C.S. NO. C20808 09/30/13 STATE OF CALIFORNIA

No.	Revision	Date
	ADDEND #1 REV4	12.21.12
	ADDEND #2 REV5	1.10.13

County Facility:

ATASCADERO LIBRARY RENOVATION
6555 CAPISTRANO AVE.
ATASCADERO CA 93422

Project Manager: M. DEMARTINI
Checked By: MD
Client Approval:
Date: 08/20/2012

CONTRACTOR SHALL VERIFY ALL DIMENSIONS AND EXISTING CONDITIONS PRIOR TO COMMENCING WORK. REPORT ANY DISCREPANCIES TO COUNTY PROJECT COORDINATOR OR TO THE PROJECT ARCHITECT.

Project Title : ATASCADERO LIBRARY RENOVATION
6555 CAPISTRANO AVE. ATASCADERO CA 93422

Sheet Title : SITE PLAN FIRE PROTECTION FIRST STORY

Sheet Number A1.1 of Sheets

PROJECT No. 417

FILE No.

BIDDING ADDENDUM #2 1-10-13

BID SET 03-26-13
BIDDING ADDENDUM #2 1-10-13
BID SET 03-26-13

BID SET 03-26-13
BID SET 03-26-13

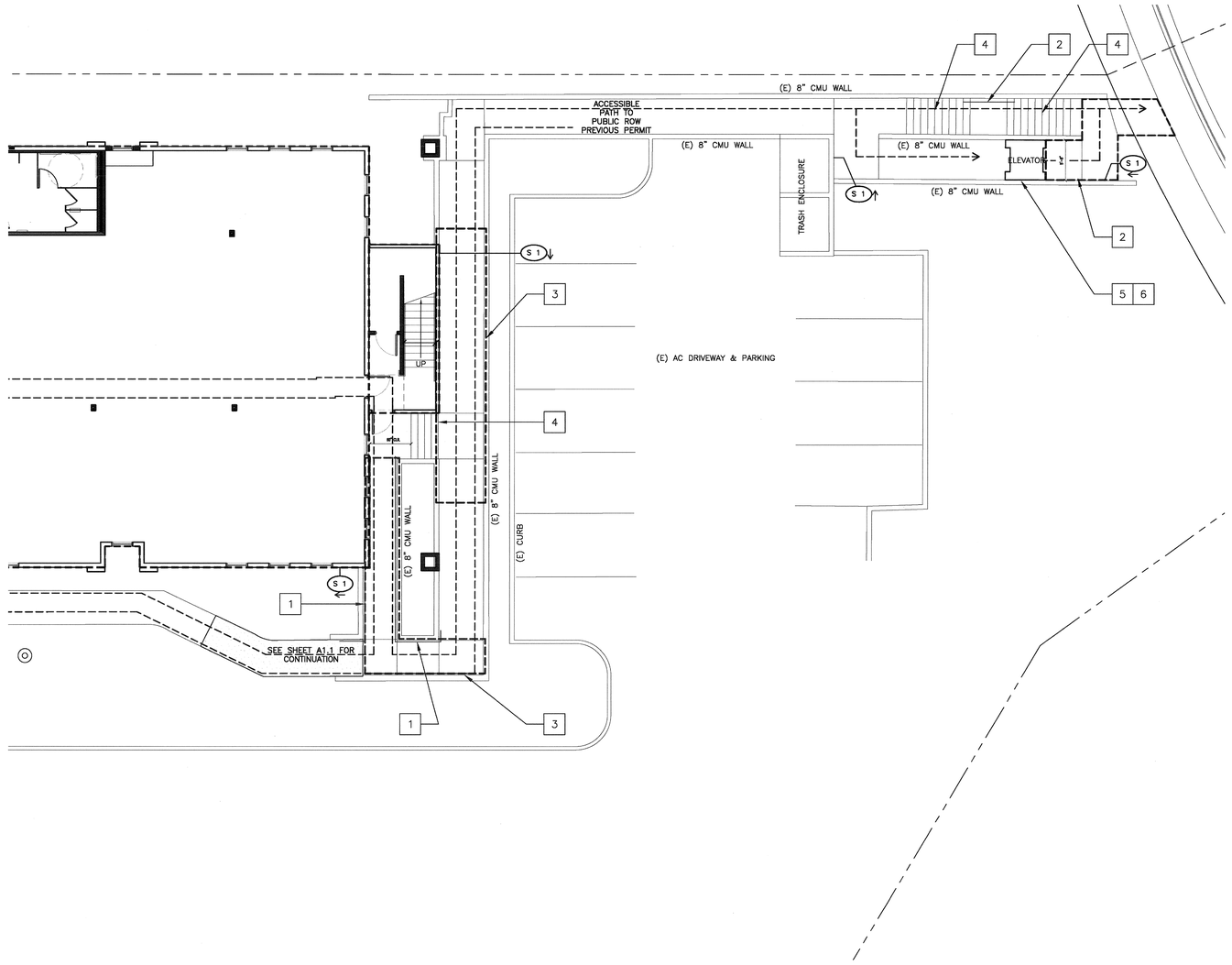

1 EXISTING SITE PLAN

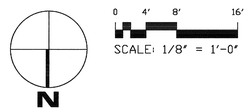

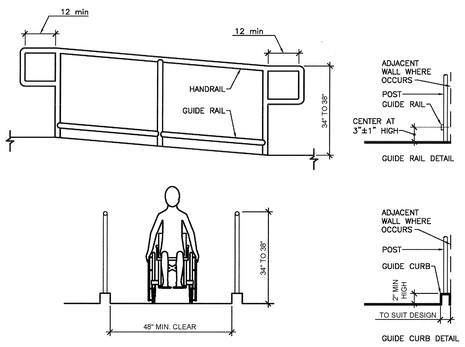

RAMPS AND SIDEWALKS
SCALE: 1/2" = 1'-0"
54 A1.1.5

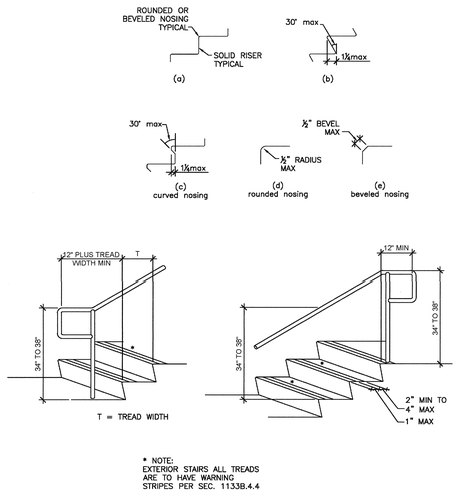

* NOTE:
EXTERIOR STAIRS ALL TREADS ARE TO HAVE WARNING STRIPES PER SEC. 1133B.4.4

WARNING STRIPING AND HANDRAIL EXTENSIONS
SCALE: 1/2" = 1'-0"
44 A1.1.5

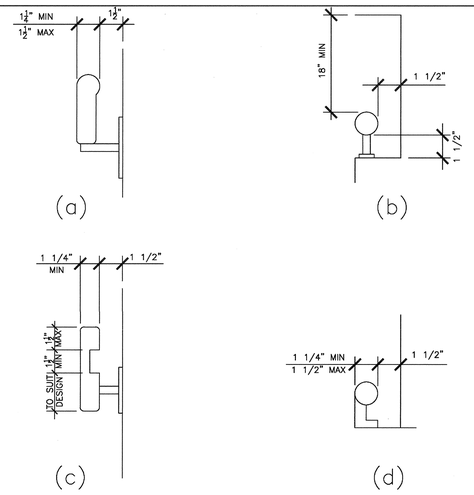

NOTE: HANDRAIL WHEN REQUIRED SHALL BE ADJACENT TO A SMOOTH SURFACE IT ATTACHES TO.

STAIR HANDRAILS
SCALE: 3" = 1'-0"
34 A1.1.5

1. RECONSTRUCT EXISTING RAIL TO COMPLY WITH NEW GRADED SURFACE PER ADA HEIGHT AND CLEARANCE REQUIREMENTS PER DETAILS 34, 44, 54/A1.1.5
2. REPAIR EXISTING RAILING TO COMPLY WITH ADA HEIGHT AND CLEARANCE REQUIREMENTS PER DETAILS 34, 44, 54/A1.1.5
3. AREA OF NEW GRADE SURFACE ADJUSTMENT, SEE CIVIL.
4. PROVIDE NEW 2" WIDE CONTRASTING WARNING STRIP AT EACH INTERMEDIATE STAIR TREAD PER DETAIL 44/A1.1.5. ADHESIVE, EXTERIOR GRADE
5. VERIFY EXISTING CHAIR LIFT MEETS CURRENT ADA STANDARDS PER CBC SECTION 1116B.2. IDENTIFY DEFICIENCIES AND PROVIDE AND INSTALL REQUIRED ITEMS TO MEET CBC SECTION 1116B.2. SEE DETAIL 44/A8.3
6. VERIFY AND CONNECT CALL BOX TO NCSC AND LIBRARY. CONFIRM LOCATION AND OPERATION WITH CLIENT.

KEYNOTES
SCALE: N.T.S.
14 A1.1.5

COUNTY OF SAN LUIS OBISPO
DEPARTMENT OF GENERAL SERVICES
1087 SANTA ROSA STREET
SAN LUIS OBISPO, CA 93408
PHONE 8057815200

RAVATT ALBRIGHT & ASSOCIATES, INC.
ARCHITECTURE INTERIORS GREEN RAVATT, AIA MECHANICAL ELECTRICAL JIM ALBRIGHT, PE
1070 PACIFIC STREET SAN LUIS OBISPO CA 93401
PHONE: 805/786-8381 SLO
805/928.3032 SM
FAX: 805/786-0750 SLO
805/928.0695 SM
EMAIL: OFFICE@RAVATT-ALBRIGHT.COM

REGISTERED ARCHITECT GREGORY ALLEN RAVATT LIC. NO. C-20008 04/30/13 STATE OF CALIFORNIA

No.	Revision	Date
	PLANCHECK REV1	9.26.12
	PLANCHECK REV2	10.24.12
	PLANCHECK REV3	11.19.12

County Facility:

ATASCADERO LIBRARY RENOVATION
6555 CAPISTRANO AVE.
ATASCADERO CA 93422

Project Manager: M. DEMARTINI
Checked By: MD
Client Approval:
Date: 08/20/2012

CONTRACTOR SHALL VERIFY ALL DIMENSIONS AND EXISTING CONDITIONS PRIOR TO COMMENCING WORK. REPORT ANY DISCREPANCIES TO COUNTY PROJECT COORDINATOR OR TO THE PROJECT ARCHITECT.

Project Title : ATASCADERO LIBRARY RENOVATION
6555 CAPISTRANO AVE. ATASCADERO CA 93422

Sheet Title : PARTIAL SITE PLAN, PATH OF TRAVEL

Sheet Number
A1.1.5
of Sheets

PROJECT No. 417

FILE No.

BIDDING SET 11-19-12

BIDDING SET 11-19-12
BID SET 03-26-13
BID SET 03-26-13
BID SET 03-26-13

BID SET 03-26-13
BID SET 03-26-13

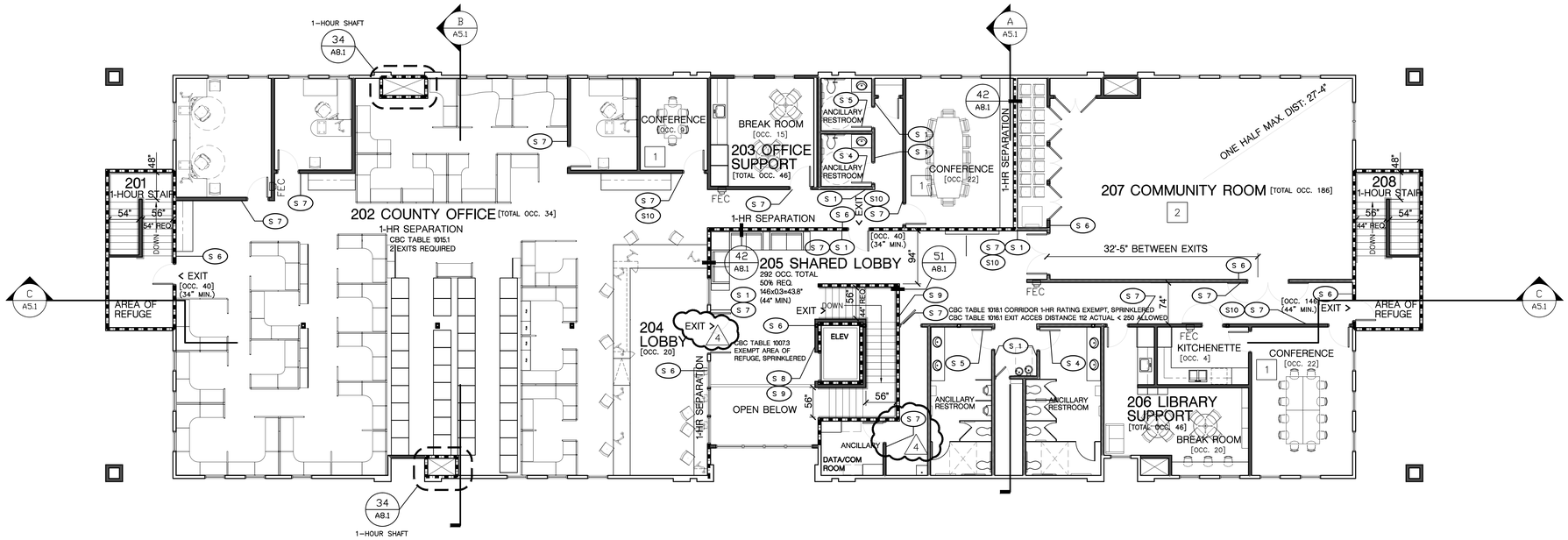

NOTE: PENETRATIONS OF FIRE-RESISTIVE WALLS, FLOOR-CEILINGS, AND ROOF-CEILINGS SHALL BE PROTECTED AS REQUIRED IN CBC SECTIONS 713.3 & 713.4

WAY FINDING AND ADA SIGNAGE LOCATION

* SEE DETAIL 14. SEE ALSO SHEET T2 FOR ADDITIONAL MOUNTING INFO.

SYMBOL LEGEND

1 HOUR SEPARATION, SEE DETAILS

FEC — FIRE EXTINGUISHER CABINET: 2A10BC TYPE FIRE EXTINGUISHER LOCATION NO MORE THAN 75 FT. DISTANCE

1. PROVIDE PORTABLE ASSISTED LISTENING DEVICE AND SIGNAGE FOR THIS ROOM. SEE PLAN FOR SIGNAGE LOCATION.
2. PROVIDE PERMANENT ASSISTED LISTENING DEVICE WITH MIN. TWO HEADPHONES AND SIGNAGE FOR THIS ROOM. SEE PLAN FOR SIGNAGE LOCATION.

N

0 4' 8' 16'
SCALE: 1/8" = 1'-0"

1 FIRE PROTECTION, EXITING AND SIGNAGE, SECOND STORY

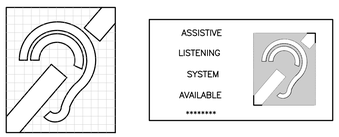

(A) SYMBOL PROPORTIONS

S10 (B) PICTOGRAM

NOTES:

1. SIGNAGE SHALL BE POSTED IN A PROMINENT PLACE.
2. THE SIGN WILL INDICATE THE AVAILABILITY OF
3. ASSISTIVE-LISTENING DEVICES. THE SIGN SHALL CONTAIN THE INTERNATIONAL SYMBOL OF ACCESS FOR HEARING LOSS & CONTAIN THE WORDS, "ASSISTIVE-LISTENING SYSTEM AVAILABLE".

ASSISTIVE LISTENING SIGNAGE

34 A1.2

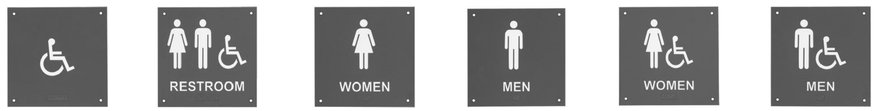

8X8 — S 1 PART#: BF683
8X8 — S 2 PART#: BF689
8X8 — S 3 PART#: BF685
8X8 — S 3 PART#: BF684
8X8 — S 4 PART#: BF688
8X8 — S 5 PART#: BF687

THE INTERNATIONAL SYMBOL OF ACCESSIBILITY IS REQUIRED ON:

1. ACCESSIBLE ENTRANCES (INACCESSIBLE ENTRANCES SHALL HAVE DIRECTIONAL SIGNAGE TO INDICATE THE ROUTE TO THE NEAREST ACCESSIBLE ENTRANCE).
2. ACCESSIBLE TOILET AND BATHING FACILITIES.
3. SIGNS SHALL BE ROCKWOOD, BF SERIES, METAL, DARK BRONZE D3, WITH WHITE TACTILE LETTERING AND BRAILLE SUBTITLING. MOUNT SIGN AT 60" CL FROM FF/ TYPICAL
4. DIRECTORY SIGN SHALL BE PRINTED CLEAR ACRYLIC ON STAND OFFS. CLEARPATH SIGNAGE SYSTEMS, MIX ALU, SATIN ALUMINUM FINISH.
5. PROVIDE ASSISTED LISTENING SIGNAGE AS REQUIRED PER DETAIL 34/A1.2. SEE PLAN FOR LOCATIONS. S10

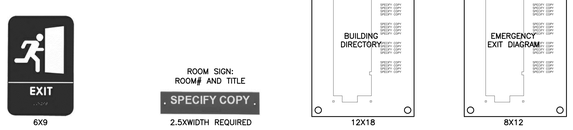

6X9 — S 6 PART#: BFM682
2.5XWIDTH REQUIRED — S 7 PART#: BF680
12X18 — S 8 PART#: MIX ALU
8X12 — S 9 PART#: MIX ALU

ROOM AND WAY FINDING SIGNAGE

14 A1.2

COUNTY OF SAN LUIS OBISPO
DEPARTMENT OF GENERAL SERVICES
1087 SANTA ROSA STREET
SAN LUIS OBISPO, CA 93408
PHONE 8057815200

Friends of the Atascadero Library

ARCHITECTURE • INTERIORS
GREEN, ENERGY, AIR
MECHANICAL • ELECTRICAL
PLUMBING, FIRE, LIFE
1070 PACIFIC STREET
SAN LUIS OBISPO, CA 93401
PHONE (805) 781-0382 (V)
(805) 528-5002 (M)
FAX (805) 786-0792 (G)
(805) 528-8998 (M)
E-MAIL: OFFICE@RAARCHITECTS.COM

RAYMOND ARCHITECTS
A. RAYMOND, CEO, PRES.
MAURITIUS, CHIEF ENGINEER

REGISTERED ARCHITECT
GREGORY ALLEN TARPEY
LIC. NO. C20808
09/30/13
STATE OF CALIFORNIA

No.	Revision	Date
	ADDEND #1 REV4	12.21.12

County Facility:

ATASCADERO LIBRARY RENOVATION
6555 CAPISTRANO AVE.
ATASCADERO CA 93422

Project Manager: M. DEMARTINI
Checked By: MD
Client Approval:
Date: 08/20/2012

CONTRACTOR SHALL VERIFY ALL DIMENSIONS AND EXISTING CONDITIONS PRIOR TO COMMENCING WORK. REPORT ANY DISCREPANCIES TO COUNTY PROJECT COORDINATOR OR TO THE PROJECT ARCHITECT.

Project Title : ATASCADERO LIBRARY RENOVATION
6555 CAPISTRANO AVE
ATASCADERO CA 93422

Sheet Title : FIRE PROTECTION EXITING AND SIGNAGE PLAN SECOND STORY

Sheet Number
A1.2
of Sheets

PROJECT No. 417

FILE No.

BIDDING ADDENDUM #1 12-21-12

BID SET 03-26-13
BIDDING ADDENDUM #1 12-21-12
BID SET 03-26-13

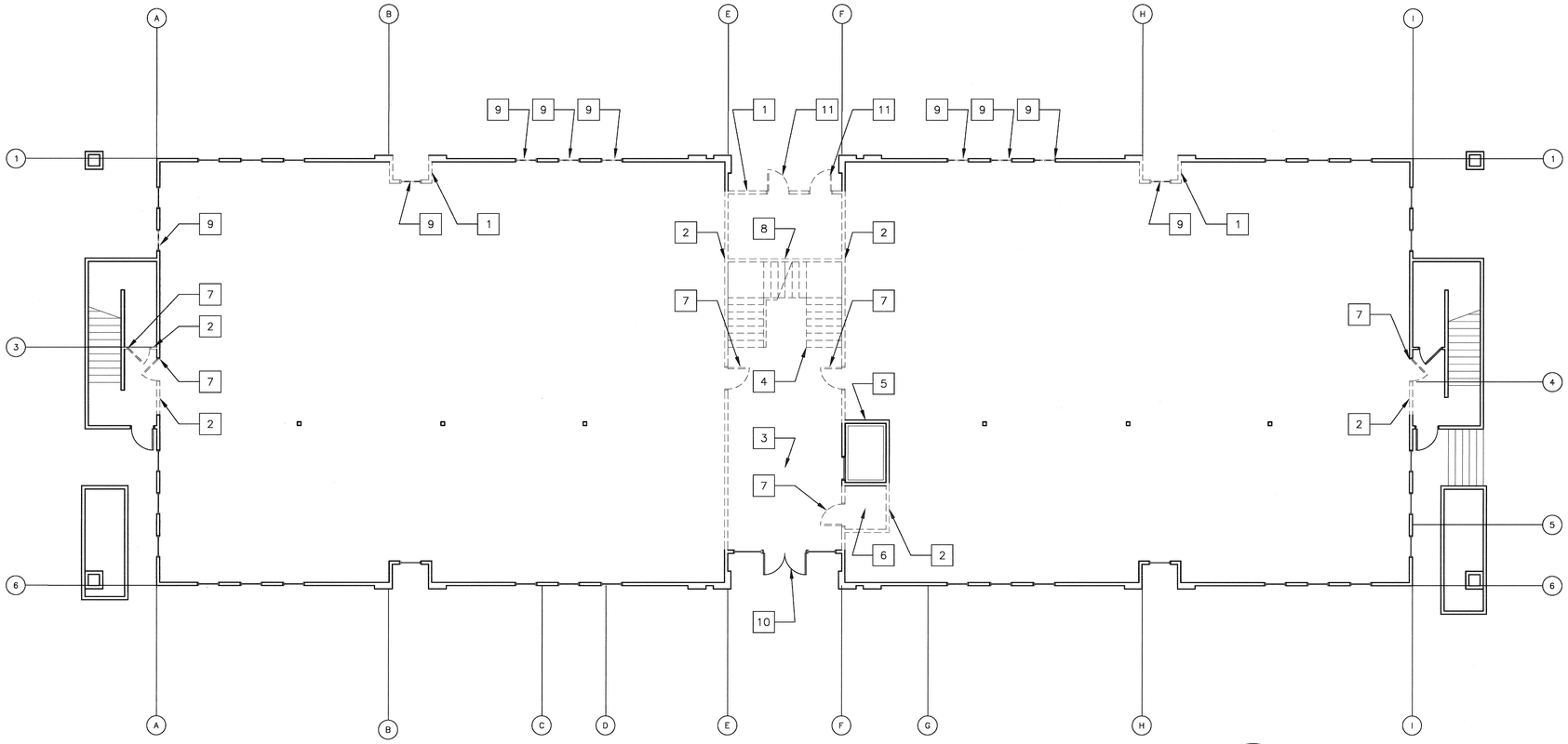

0 4' 8' 16'
SCALE: 1/8" = 1'-0"

1 DEMOLITION PLAN, FIRST STORY

1. DEMO EXISTING EXTERIOR WALL. RECYCLE AS REQUIRED PER SPECIFICATIONS
2. DEMO EXISTING INTERIOR WALL. RECYCLE AS REQUIRED PER SPECIFICATIONS
3. DEMO EXISTING ENTIRE FLOOR FINISH AND SLAB AS REQUIRED FOR NEW STEEL FRAMES. RECYCLE AS REQUIRED PER SPECIFICATIONS
4. DEMO EXISTING STAIR. PRESERVE AND REUSE STAIR LIGHTS. SEE ELECTRICAL. SEE INTERIOR ELEVATIONS.
5. EXISTING ELEVATOR SHAFT TO REMAIN. PRESERVE AND PROTECT EXISTING ELEVATOR COMPONENTS AND CONTROLS.
6. DEMO EXISTING ELEVATOR EQUIPMENT ROOM AND RELOCATE HYDRAULIC EQUIPMENT, ELECTRICAL PANEL, AND CONNECTIONS
7. REMOVE EXISTING DOOR AND FRAME FOR RELOCATION. SEE FLOOR PLAN A2.1 FOR NEW LOCATION.
8. REMOVE AND RELOCATE EXISTING ELECTRICAL EQUIPMENT AS REQUIRED, SEE ELECTRICAL PLANS
9. DEMO EXISTING WINDOW. RECYCLE AS REQUIRED PER SPECIFICATIONS
10. REMOVE EXISTING ENTRANCE AS REQUIRED AND SHORE SUPPORT ABOVE GLASS WALL. PRESERVE AND PROTECT ENTRANCE FOR REINSTALLATION
11. REMOVE EXISTING DOOR AND FRAME. RECYCLE AS REQUIRED PER SPECIFICATIONS

24 KEY NOTES

54 GENERAL NOTES

44 LEGEND

COUNTY OF SAN LUIS OBISPO
DEPARTMENT OF GENERAL SERVICES
1087 SANTA ROSA STREET
SAN LUIS OBISPO, CA 93406
PHONE 8057815200

RAVATT ALBRECHT & ASSOCIATES, INC.
ARCHITECTURE ENGINEERING
ARCHITECTURE, INTERIORS, GREG RAVATT, AIA
MECHANICAL, ELECTRICAL, JIM ALBRECHT, PE
1870 PACIFIC STREET
SAN LUIS OBISPO CA 93401
PHONE 805/781-6100 SLO
805/928-3002 SM
FAX: 805/786-0792 SLO
805/928-3095 SM
EMAIL: INFO@RAVATT-ALBRECHT.COM

REGISTERED ARCHITECT GREGORY ALLEN RAVATT UC/ MS-TRIMOS 10/24/2012 STATE OF CALIFORNIA

No.	Revision	Date
	PLANCHECK REV1	9.26.12
	PLANCHECK REV2	10.24.12
	PLANCHECK REV3	11.19.12

County Facility:

ATASCADERO LIBRARY RENOVATION

6555 CAPISTRANO AVE.
ATASCADERO CA 93422

Project Manager: M. DEMARTINI
Checked By: MD
Client Approval:
Date: 08/20/2012

CONTRACTOR SHALL VERIFY ALL DIMENSIONS AND EXISTING CONDITIONS PRIOR TO COMMENCING WORK. REPORT ANY DISCREPANCIES TO COUNTY PROJECT COORDINATOR OR TO THE PROJECT ARCHITECT.

Project Title : ATASCADERO LIBRARY RENOVATION
6555 CAPISTRANO AVE. ATASCADERO CA 93422

Sheet Title : DEMOLITION PLAN FIRST STORY

Sheet Number
A1.3
of Sheets

PROJECT No. 417

FILE No.

BIDDING SET 11-19-12

BID SET 03-26-13
BID SET 03-26-13

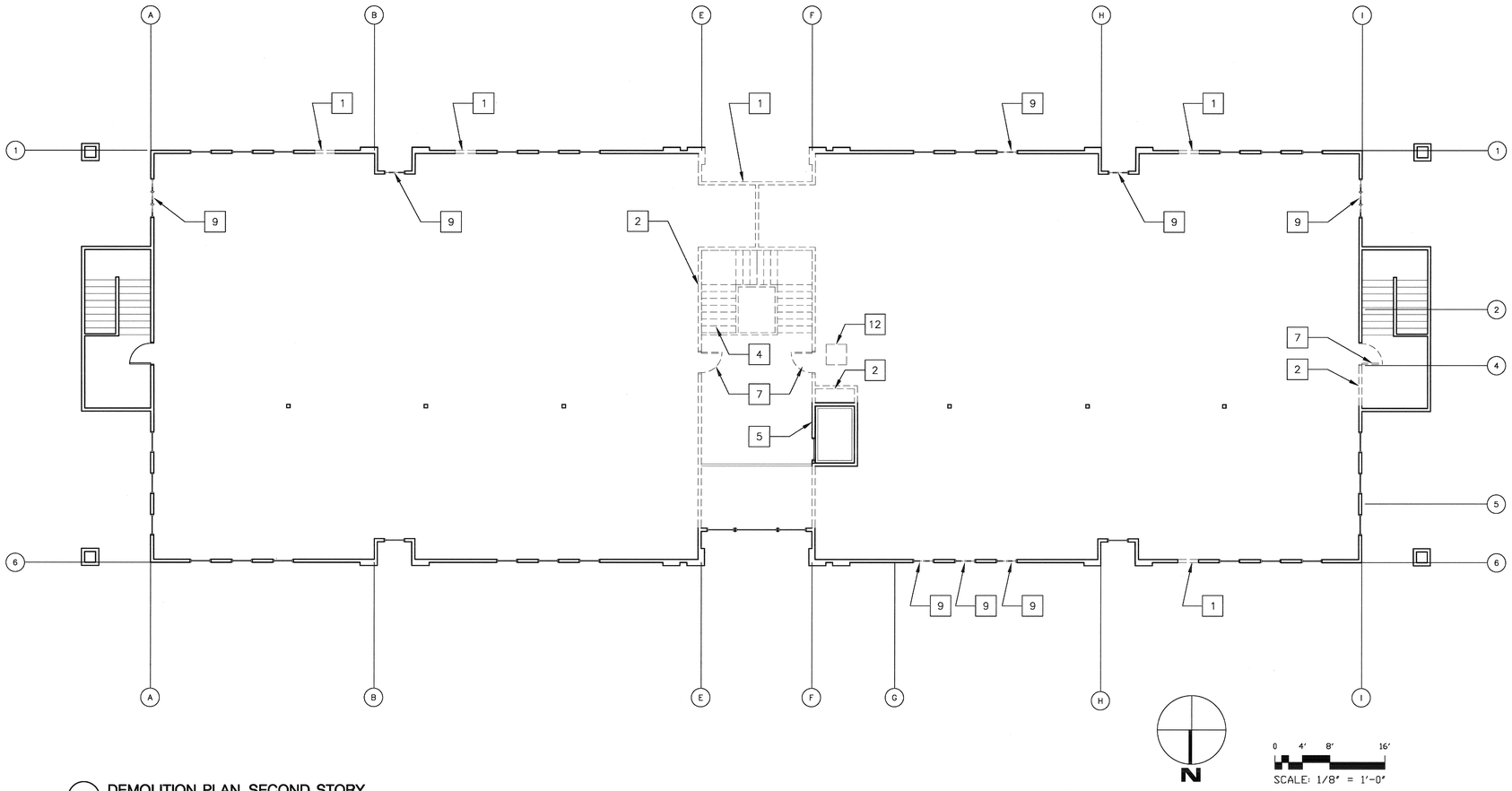

1 DEMOLITION PLAN, SECOND STORY

1. DEMO EXISTING EXTERIOR WALL. RECYCLE AS REQUIRED PER SPECIFICATIONS
2. DEMO EXISTING INTERIOR WALL. RECYCLE AS REQUIRED PER SPECIFICATIONS
3. DEMO EXISTING ENTIRE FLOOR FINISH AND SLAB AS REQUIRED FOR NEW STEEL FRAMES. RECYCLE AS REQUIRED PER SPECIFICATIONS
4. DEMO EXISTING STAIR. PRESERVE AND REUSE STAIR LIGHTS. SEE ELECTRICAL. SEE INTERIOR ELEVATIONS.
5. EXISTING ELEVATOR SHAFT TO REMAIN. PRESERVE AND PROTECT EXISTING ELEVATOR COMPONENTS AND CONTROLS.
6. NOT USED
7. REMOVE EXISTING DOOR AND FRAME FOR RELOCATION. SEE FLOOR PLAN A2.1 FOR NEW LOCATION.
8. NOT USED
9. DEMO EXISTING WINDOW. RECYCLE AS REQUIRED PER SPECIFICATIONS
10. REMOVE EXISTING ENTRANCE AS REQUIRED AND SHORE SUPPORT ABOVE GLASS WALL. PRESERVE AND PROTECT ENTRANCE FOR REINSTALLATION
11. NOT USED
12. DEMO EXISTING ROOF HATCH

54 GENERAL NOTES

44 LEGEND

24 KEY NOTES

COUNTY OF SAN LUIS OBISPO
DEPARTMENT OF GENERAL SERVICES
1087 SANTA ROSA STREET
SAN LUIS OBISPO, CA 93408
PHONE 8057815200

RAVATT ALBRIGHT & ASSOCIATES, INC.
ARCHITECTURE ENGINEERING
ARCHITECTURE •INTERIORS
GREG RAVATT, AIA
MECHANICAL •ELECTRICAL
JIM ALBRIGHT, PE
1151 PACIFIC STREET
SAN LUIS OBISPO CA 93401
PHONE: 805.786.0190 (LC)
805.928.5002 (M)
FAX: 805.786.0792 (LC)
805.928.2095 (M)
EMAIL:JIM@RAVATTALBRIGHT.COM

REGISTERED ARCHITECT
GREGORY ALLEN RAVATT
LIC. NO. C-18808
09/20/12
STATE OF CALIFORNIA

No.	Revision	Date
	PLANCHECK REV1	9.26.12
	PLANCHECK REV2	10.24.12
	PLANCHECK REV3	11.19.12

County Facility:

ATASCADERO LIBRARY RENOVATION

6555 CAPISTRANO AVE.
ATASCADERO CA 93422

Project Manager: M. DEMARTINI
Checked By: MD
Client Approval:
Date: 08/20/2012

CONTRACTOR SHALL VERIFY ALL DIMENSIONS AND EXISTING CONDITIONS PRIOR TO COMMENCING WORK. REPORT ANY DISCREPANCIES TO COUNTY PROJECT COORDINATOR OR TO THE PROJECT ARCHITECT.

Project Title : ATASCADERO LIBRARY RENOVATION
6555 CAPISTRANO AVE. ATASCADERO CA 93422

Sheet Title : DEMOLITION PLAN SECOND STORY

Sheet Number
A1.4
of Sheets

PROJECT No. 417

FILE No.

BIDDING SET 11-19-12

BIDDING SET 11-19-12
BID SET 03-26-13
BID SET 03-26-13
BID SET 03-26-13

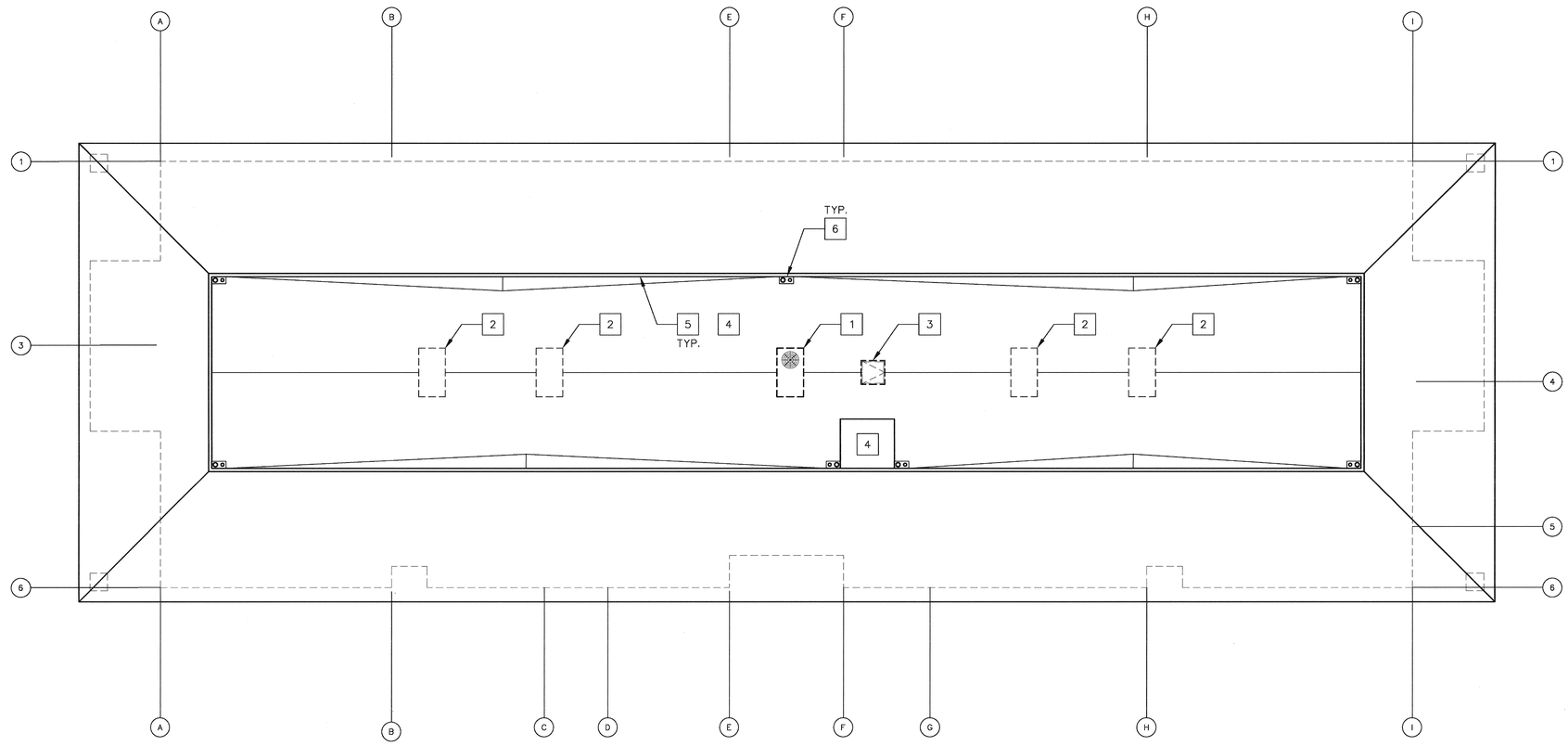

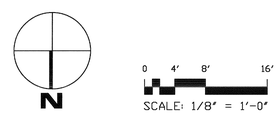

1 DEMOLITION PLAN, ROOF

1. DEMO EXISTING MECHANICAL HVAC UNIT AND CURB
2. DEMO EXISTING MECHANICAL CURB
3. DEMO EXISTING ROOF HATCH
4. DEMO EXISTING ROOF MEMBRANE
5. DEMO EXISTING BASE FLASHING, PARAPET WALL FINISH AND PLYWOOD SUBSTRATE, AND CAP FLASHING
6. REMOVE AND REUSE EXISTING HI-LOW ROOF DRAINS

24 KEY NOTES

COUNTY OF SAN LUIS OBISPO
DEPARTMENT OF GENERAL SERVICES
1087 SANTA ROSA STREET
SAN LUIS OBISPO, CA 93408
PHONE 805.781.5200

RAVATT ALBRIGHT & ASSOCIATES, INC.
ARCHITECTURE INTERIORS
GREG RAVATT, AIA
MECHANICAL, ELECTRICAL
JIM ALBRIGHT, PE
1070 PACIFIC STREET
SAN LUIS OBISPO CA 93401
PHONE 805.786.8108 X.23
805.928.3002 SM
FAX 805.786.8702 X.23
805.928.2905 SM
EMAIL@RICHARDRAVATTARCHITECT.COM

REGISTERED ARCHITECT
GREGORY ALLEN RAVATT
LIC NO. C-20806
04/30/13
STATE OF CALIFORNIA

No.	Revision	Date
	PLANCHECK REV1	9.26.12
	PLANCHECK REV2	10.24.12
	PLANCHECK REV3	11.19.12

County Facility:

ATASCADERO LIBRARY RENOVATION

6555 CAPISTRANO AVE.
ATASCADERO CA 93422

Project Manager: M. DEMARTINI
Checked By: MD
Client Approval:
Date: 08/20/2012

CONTRACTOR SHALL VERIFY ALL DIMENSIONS AND EXISTING CONDITIONS PRIOR TO COMMENCING WORK. REPORT ANY DISCREPANCIES TO COUNTY PROJECT COORDINATOR OR TO THE PROJECT ARCHITECT.

Project Title : ATASCADERO LIBRARY RENOVATION
6555 CAPISTRANO AVE.
ATASCADERO CA 93422

Sheet Title : DEMOLITION PLAN ROOF

Sheet Number
A1.5
of Sheets

PROJECT No. 417

FILE No.

BIDDING SET 11-19-12

BID SET 03-26-13
BID SET 03-26-13

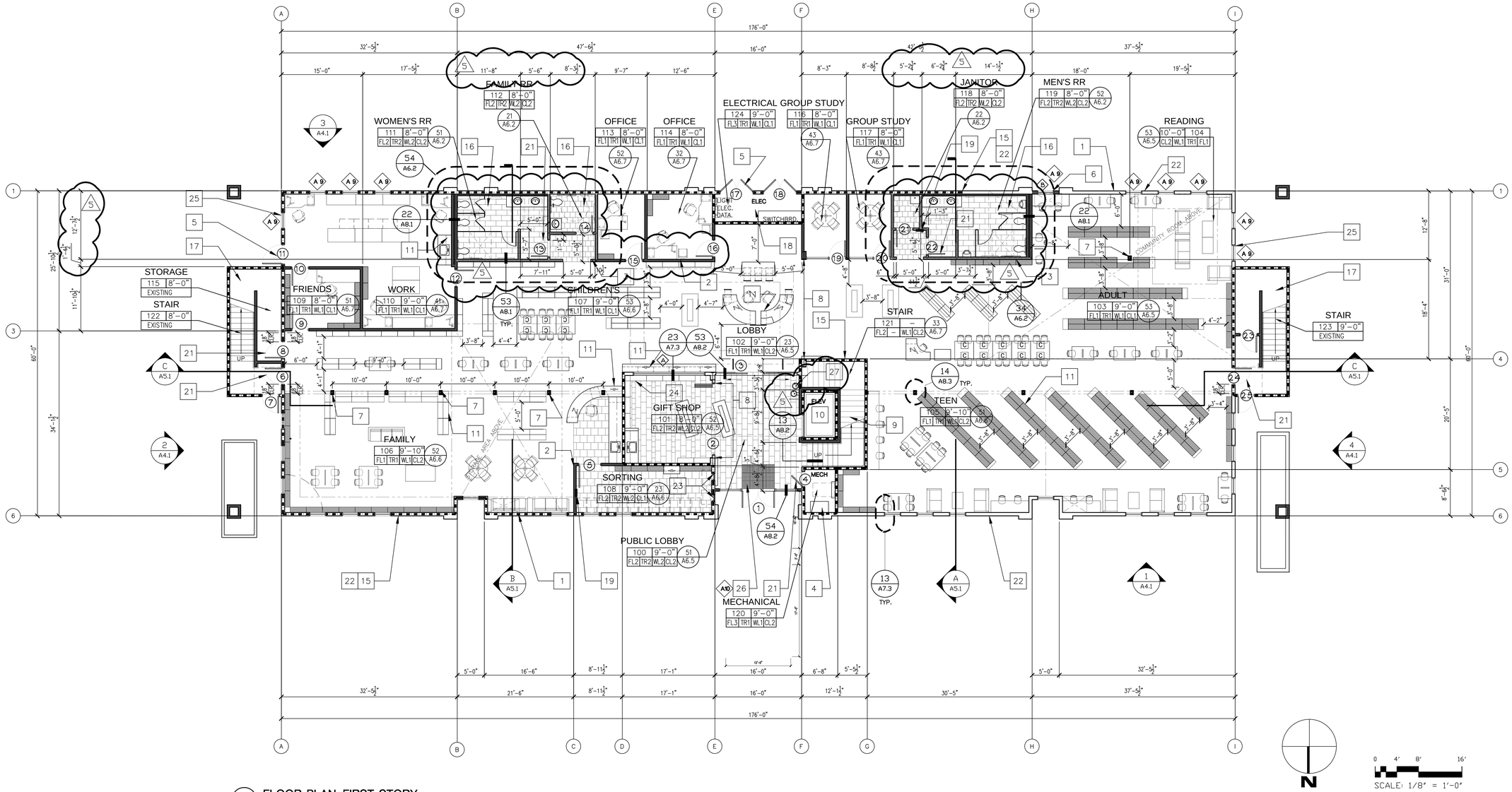

1 FLOOR PLAN, FIRST STORY

1. TEACHING FACILITY CUBICLES, STUDY CARRELS, ETC., SHALL HAVE 5% BUT ALWAYS AT LEAST ONE CUBICLE OR CARREL IN EACH GROUP MADE ACCESSIBLE AND USABLE IN COMPLIANCE WITH SECTIONS 1118B & 1122B. [1106B.3 CBC] SEE FURNITURE PLANS A7.1, A7.2
2. LIBRARY GENERAL USE AREAS SUCH AS THOSE HOUSING CARD FILES, BOOK STACKS, PERIODICALS, READING AND REFERENCE AREAS, INFORMATION DESKS, CIRCULATION COUNTERS, ETC., SHALL BE MADE ACCESSIBLE. [1106B.4.1 CBC] SEE FURNITURE PLANS A7.1, A7.2
3. OPEN BOOK STACKS AVAILABLE FOR CUSTOMER USE MAY BE OF NORMAL HEIGHT, AND SHALL HAVE MAIN AISLES NO LESS THAN 44" IN WIDTH AND SIDE, RANGE, AND END AISLES NO LESS THAN 36" IN WIDTH. [1106B.4.2 CBC]. SEE FURNITURE PLANS A7.L1 & A7.2
4. REACH HEIGHTS AT CARD CATALOGS AND MAGAZINE DISPLAYS, SHALL BE BETWEEN 15" AND 48" FOR FORWARD REACH AND BETWEEN 9" AND 54" FOR SIDE REACH WITH REACH OVER OBSTRUCTIONS IN ACCORDANCE WITH FIGURES 11B–5C & D. [1106B.4.4 CBC]. SEE FURNITURE PLANS A7.1 & A7.2
5. UNLESS AN ATTENDANT IS AVAILABLE TO ASSIST PERSONS WITH DISABILITIES, ALL BOOK SHELVING SHALL BE LOCATED NOT MORE THAN 54" ABOVE THE FLOOR. [1106B.4.3 CBC]. SEE FURNITURE PLANS A7.1 & A7.2

54 GENERAL NOTES

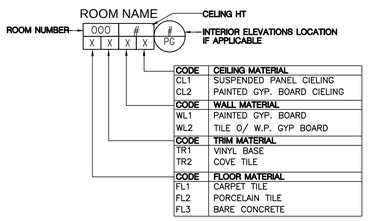

44 ROOM LEGEND

ACCESSORIES	
A 9	TYPE: HUNTER–DOUGLASS CONTRACT, ROLLER SHADES RB500 COLOR: E–SCREEN 7705, COCOA/COCOA
A10	TYPE: C/S GROUP ENTRY MAT COLOR: FLOOROMETRY, SS

33 FINISH NOTES

NEW 1 – HOUR PARTITION

NEW SOUNDWALL

NEW 2X6 STUDWALL

EXISTING 2X EXTERIOR WALL

ABOVE LINE

34 SYMBOLD LEGEND

1. EXISTING 2X8 EXTERIOR WALL
2. NEW 2X6 INTERIOR WALL ASSEMBLY
3. NEW INTERIOR SOUND WALL ASSEMBLY
4. RELOCATED ELEVATOR MECHANICAL ROOM, HYDRAULIC EQUIP., ELECT. PANEL, AND CONNECTIONS
5. NEW EXTERIOR DOOR ASSEMBLY
6. NEW EXTERIOR WINDOW
7. NEW STEEL COLUMN, SEE DETAILS FOR FIRE PROTECTION AND TRIM.
8. NEW MOMENT FRAME
9. NEW PREFAB METAL STAIR
10. EXISTING ELEVATOR AND 1–HR WALL TO REMAIN. CONTRACTOR TO VERIFY EXISTING ELEVATOR MEETS THE CURRENT CODE REQUIREMENTS. SEE DETAIL 54/A8.3.
11. NEW FIXED FURNITURE ELEMENT. PROVIDE STRUCTURAL SUPPORT PER CBC SEISMIC REQ. SEE FURNITURE PLAN.
12. FIRE EXTINGUISHER LOCATION
13. NOT USED
14. NOT USED
15. 1–HR WALL ASSEMBLY
16. NEW RESTROOM
17. EXISTING STAIR TO REMAIN. NO NEW WORK REQUIRED.
18. NEW ELECTRICAL SERVICE, PANEL, DATA, AND LIGHTING CONTROLS, SEE ELECTRICAL
19. NEW ELECTRICAL PANEL LOCATION, SEE ELECTRICAL
20. NOT USED
21. RELOCATED DOOR. CONFIRM ADA CLEARANCE REQ.–VERIFY DOOR RATING REQ. AND DOOR FINISH. SEE SCHEDULE.
22. EXISTING 2X PERIMETER STUD WALL. PROVIDE TYPE 'X' GYP. BOARD INTERIOR FINISH PER DETAIL. SEE STRUC. FOR SHEET PANEL REQ.
23. BOOK/MEDIA RETURN, TEKSTAR SINGLE RETURN SYSTEM. SEE MANU. SPEC.
24. 2X8 STUD WALL THIS LOCATION
25. PROVIDE ROLLER SHADES. INSTALL AT WINDOW HEAD JAMB INSET A 9
26. PROVIDE 54" X 54" SOLID GRATE ENTRY MAT. INSTALL FLUSH TO TILE FINISH SURFACE.
27. NEW HI–LOW DRINKING FOUNTAIN. SEE PLUMBING SHEETS

24 KEY NOTES

COUNTY OF SAN LUIS OBISPO
DEPARTMENT OF GENERAL SERVICES
1087 SANTA ROSA STREET
SAN LUIS OBISPO, CA 93408
PHONE 805.781.5200

RAVATT ALBRECHT & ASSOCIATES, INC.
ARCHITECTURE AND PLANNING

ARCHITECTURE ■ PLANNING
GREG RAVATT, AIA
VRG TUNAK, AIA ■ ERIC TIDE, AIA
JIM ALBRECHT, PE

1570 PACIFIC BLVD., SUITE E
SAN LUIS OBISPO, CA 93401
PHONE: 805.786.4300 (ALL)
805/928.5032 (AM)
FAX: 805.786.4792 (ALL)
805/928.0505 (AM)
EMAIL: INFO@RAVATT-ALBRECHT.COM

REGISTERED ARCHITECT
GREGORY ALLEN RAVATT
C.S.L. No. C20808
09/30/13
STATE OF CALIFORNIA

No.	Revision	Date
	ADDEND #1 REV4	12.21.12
	ADDEND #2 REV5	1.10.13

County Facility:

ATASCADERO LIBRARY RENOVATION

6555 CAPISTRANO AVE.
ATASCADERO CA 93422

Project Manager: M. DEMARTINI
Checked By: MD
Client Approval:
Date: 08/20/2012

CONTRACTOR SHALL VERIFY ALL DIMENSIONS AND EXISTING CONDITIONS PRIOR TO COMMENCING WORK. REPORT ANY DISCREPANCIES TO COUNTY PROJECT COORDINATOR OR TO THE PROJECT ARCHITECT.

Project Title : ATASCADERO LIBRARY RENOVATION
6555 CAPISTRANO AVE
ATASCADERO CA 93422

Sheet Title : FLOOR PLAN FIRST STORY

Sheet Number
A2.1
of Sheets

PROJECT No. 417

FILE No.

BIDDING ADDENDUM #2 1-10-13

BID SET 03-26-13
BIDDING ADDENDUM #2 1-10-13
BID SET 03-26-13

BID SET 03-26-13
BID SET 03-26-13

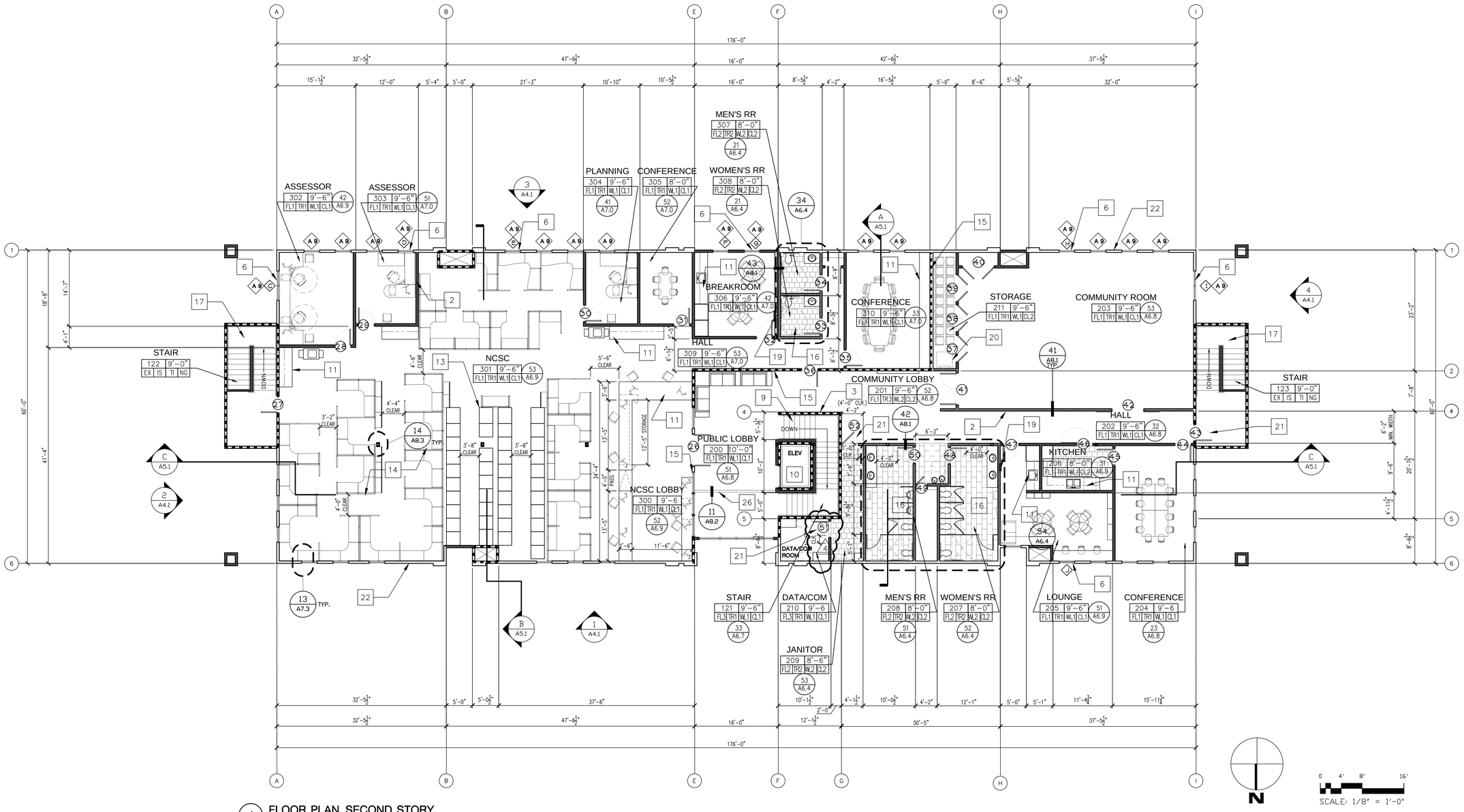

1 FLOOR PLAN, SECOND STORY

1. TEACHING FACILITY CUBICLES, STUDY CARRELS, ETC., SHALL HAVE 5% BUT ALWAYS AT LEAST ONE CUBICLE OR CARREL IN EACH GROUP MADE ACCESSIBLE AND USABLE IN COMPLIANCE WITH SECTIONS 1118B & 1122B. [1106B.3 CBC] SEE FURNITURE PLANS A7.1, A7.2
2. LIBRARY GENERAL USE AREAS SUCH AS THOSE HOUSING CARD FILES, BOOK STACKS, PERIODICALS, READING AND REFERENCE AREAS, INFORMATION DESKS, CIRCULATION COUNTERS, ETC., SHALL BE MADE ACCESSIBLE. [1106B.4.1 CBC] SEE FURNITURE PLANS A7.1, A7.2
3. OPEN BOOK STACKS AVAILABLE FOR CUSTOMER USE MAY BE OF NORMAL HEIGHT, AND SHALL HAVE MAIN AISLES NO LESS THAN 44" IN WIDTH AND SIDE, RANGE, AND END AISLES NO LESS THAN 36" IN WIDTH. [1106B.4.2 CBC]. SEE FURNITURE PLANS A7.L1 & A7.2
4. REACH HEIGHTS AT CARD CATALOGS AND MAGAZINE DISPLAYS, SHALL BE BETWEEN 15" AND 48" FOR FORWARD REACH AND BETWEEN 9" AND 54" FOR SIDE REACH WITH REACH OVER OBSTRUCTIONS IN ACCORDANCE WITH FIGURES 11B-5C & D. [1106B.4.4 CBC]. SEE FURNITURE PLANS A7.1 & A7.2
5. UNLESS AN ATTENDANT IS AVAILABLE TO ASSIST PERSONS WITH DISABILITIES, ALL BOOK SHELVING SHALL BE LOCATED NOT MORE THAN 54" ABOVE THE FLOOR. [1106B.4.3 CBC]. SEE FURNITURE PLANS A7.1 & A7.2

54 GENERAL NOTES

ROOM NAME — CELING HT
ROOM NUMBER — 000 # — # PG — INTERIOR ELEVATIONS LOCATION IF APPLICABLE
X X X X

CODE	CEILING MATERIAL
CL1	SUSPENDED PANEL CIELING
CL2	PAINTED GYP. BOARD CIELING
CODE	**WALL MATERIAL**
WL1	PAINTED GYP. BOARD
WL2	TILE O/ W.P. GYP BOARD
CODE	**TRIM MATERIAL**
TR1	VINYL BASE
TR2	COVE TILE
CODE	**FLOOR MATERIAL**
FL1	CARPET TILE
FL2	PORCELAIN TILE
FL3	BARE CONCRETE

44 ROOM LEGEND

SURFACES
A 9 TYPE: HUNTER-DOUGLASS CONTRACT, ROLLER SHADES RB500
COLOR: E-SCREEN 7705, COCOA/COCOA

33 FINISH NOTES

NEW 1 – HOUR PARTITION
NEW SOUNDWALL
NEW 2X6 STUDWALL
EXISTING 2X EXTERIOR WALL
ABOVE LINE

34 SYMBOL LEGEND

1. NOT USED
2. NEW 2X6 INTERIOR WALL ASSEMBLY
3. NEW INTERIOR SOUND WALL ASSEMBLY
4. RELOCATED ELEVATOR MECHANICAL ROOM
5. NOT USED
6. NEW EXTERIOR WINDOW
7. NOT USED
8. NOT USED
9. NEW PREFAB METAL STAIR
10. EXISTING ELEVATOR AND 1-HR WALL TO REMAIN. CONTRACTOR TO VERIFY EXISTING ELEVATOR MEETS THE CURRENT CODE REQUIREMENTS. SEE DETAIL 54/A8.3.
11. NEW FIXED FURNITURE ELEMENT. PROVIDE STRUCTURAL SUPPORT PER CBC SEISMIC REQ. SEE FURNITURE PLAN.
12. FIRE EXTINGUISHER LOCATION
13. NEW HIGH DENSITY STORAGE UNIT, SEE FURN. PLAN
14. MODULAR FURNITURE BY COUNTY
15. NEW 1-HR WALL
16. NEW RESTROOM
17. EXISTING STAIR TO REMAIN. NO NEW WORK REQUIRED.
18. NEW ELECTRICAL SERVICE, PANEL, DATA, AND LIGHTING CONTROLS, SEE ELECTRICAL
19. NEW ELECTRICAL PANEL LOCATION, SEE ELECTRICAL
20. NEW ROOF ACCESS HATCH AND LADDER
21. RELOCATED DOOR. CONFIRM ADA CLEARANCE REQ.-VERIFY DOOR RATING REQ. AND DOOR FINISH. SEE SCHEDULE.
22. EXISTING 2X PERIMETER STUD WALL. PROVIDE GYP. BOARD INTERIOR FINISH.
23. NOT USED
24. NOT USED
25. PROVIDE ROLLER SHADES. INSTALL AT WINDOW HEAD JAMB INSET A 9
26. NEW GUARD RAIL

24 KEY NOTES

COUNTY OF SAN LUIS OBISPO DEPARTMENT OF GENERAL SERVICES
1087 SANTA ROSA STREET
SAN LUIS OBISPO, CA 93408
PHONE 805.781.5200

ARCHITECTURE • INTERIORS
GREG RASVATT, AIA
MECHANICAL • ELECTRICAL
JIM ALBRECHT, PE
1215 PACIFIC STREET
SAN LUIS OBISPO, CA 93401
PHONE: 805.786.4300 (A,C)
805.928.5282 (M)
FAX: 805.786.4792 (A,C)
805.928.2809 (M)
EMAIL: GREG@RASVATT.COM, JIM@RASVATT.COM
RASVATT ALBRECHT & ASSOCIATES, INC.
ARCHITECTURE ENGINEERING

REGISTERED ARCHITECT
GREGORY ALLEN RASVATT
LIC. NO. C20808
09/30/13
STATE OF CALIFORNIA

No.	Revision	Date
	ADDEND #1 REV4	12.21.12

County Facility:

ATASCADERO LIBRARY RENOVATION
6555 CAPISTRANO AVE.
ATASCADERO CA 93422

Project Manager: M. DEMARTINI
Checked By: MD
Client Approval:
Date: 08/20/2012

CONTRACTOR SHALL VERIFY ALL DIMENSIONS AND EXISTING CONDITIONS PRIOR TO COMMENCING WORK. REPORT ANY DISCREPANCIES TO COUNTY PROJECT COORDINATOR OR TO THE PROJECT ARCHITECT.

Project Title : ATASCADERO LIBRARY RENOVATION
6555 CAPISTRANO AVE
ATASCADERO CA 93422

Sheet Title : FLOOR PLAN SECOND STORY

Sheet Number
A2.2
of Sheets

PROJECT No. 417
FILE No.

BIDDING ADDENDUM #1 12-21-12

BIDDING ADDENDUM #1 12-21-12
BID SET 03-26-13
BID SET 03-26-13
BID SET 03-26-13

BID SET 03-26-13
BID SET 03-26-13

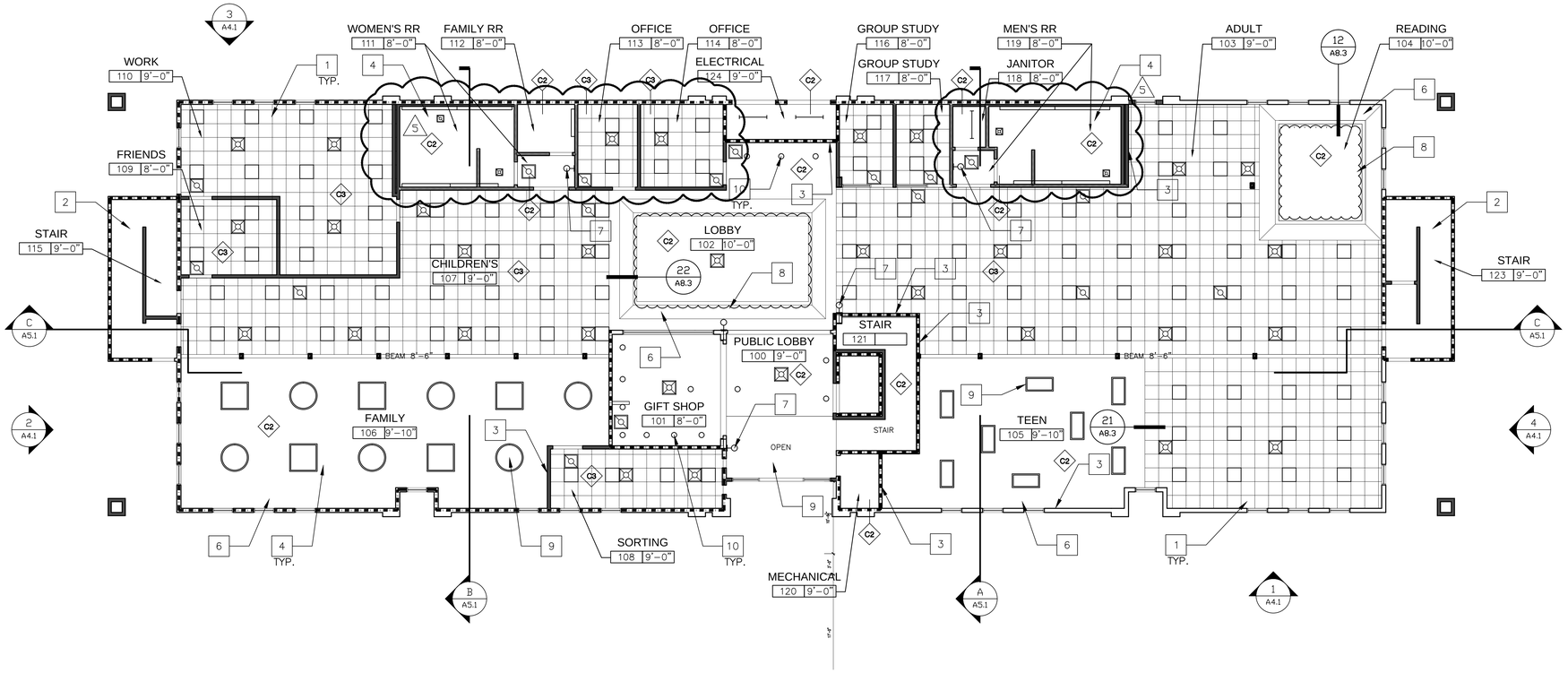

1 REFLECTED CEILING PLAN, FIRST STORY

ROOM NAME — CELING HT
ROOM NUMBER — 000 #

FINISH SCHEDULE	
CEILINGS	
C1	MANU: SUSPENDED PANEL CEILING, CLASS A, ASTM E84 COLOR: USG LOGIX, 30X60 GRID, IDENTITEE DXI, HALCYON PANEL, 1"TH
C2	MANU: 5/8" TYPE 'X' GYP. BOARD COLOR: SHERWIN WILLIAMS, SW 7009 PEARLY WHITE
C3	MANU: SUSPENDED PANEL CEILING, CLASS A, ASTM E84 COLOR: USG HALCYON, IDENTITEE DXI

- RECESSED LINEAR LIGHT FIXTURE. SEE ELECTRICAL
- 5'-0" LIGHT FIXTURE, SEE ELECTRICAL
- 5'-0" LIGHT FIXTURE WITH ADJ. SPOT LIGHT AT EACH END, SEE ELECTRICAL
- RETURN AIR REGISTER, SEE MECHANICAL
- SUPPLY AIR DIFFUSER, SEE MECHANICAL
- T-BAR CEILING LIGHT FIXTURE. SEE ELECTRICAL
- SUPPLY AIR DIFFUSER, SEE MECHANICAL
- RETURN AIR REGISTER, SEE MECHANICAL
- CEILING EXHAUST REGISTER AND TRANSFER GRILL. SEE MECHANICAL
- RECESSED CAN LIGHT, 1-HR HOUSING REQ.

54 FINISH AND SYMBOL LEGEND

1. NEW T-BAR CEILING WITH NEW LIGHTING, SEE ELECTRICAL
2. EXISTING GYP. BOARD CEILING WITH LIGHTS AND SWITCHING TO REMAIN
3. ARTWORK TO BE HUNG FROM CEILING. SEE DETAIL 34/A3.1. ALL ART EQUIPMENT TO BE PROVIDED BY COUNTY
4. NEW GYP BOARD CEILING. SEE DETAIL 14/A8.3
5. NEW HVAC REGISTERS. SEE MECHANICAL.
6. NEW GYP BOARD SOFFIT.
7. NEW WALL SCONCE LIGHT FIXTURE, SEE ELEC.
8. NEW COVE LIGHT FIXTURE, SEE ELEC.
9. NEW SUSPENDED LIGHT FIXTURE, SEE ELECT.
10. RECESSED 1-HR RATED CAN LIGHT

NOTE: SUSPENDED CEILINGS SHALL COMPLY WITH CBC SECTION 808.1 AND ASCE 7-05 SECTION 13.5.6.

NOTE: WALL AND CEILING MATERIALS SHALL NOT EXCEED THE FLAME SPREAD CLASSIFICATION IN CBC TABLE 803.5

NOTE: SPECIAL INSPECTION IS REQ. FOR SUSPENDED CEILING AND ANCHORAGE FOR SEISMIC DESIGN CAT. D.

44 KEY NOTES

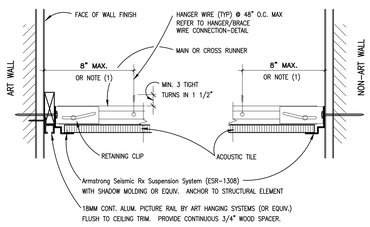

NOTES:
(1) 1/4 OF THE LENGTH OF THE END RUNNER WHICHEVER IS LESS.
(2) FOR HANGER WIRE ATTACHMENT SEE DETAIL 24/A3.1
(3) FOR BRACING SEE DETAIL 14/A3.1

NOTE:
INSTALL CEILING PER TITLE 24 AND ASCE 7-5

34 T-BAR CEILING EDGE
SCALE: 1"=1'-0"

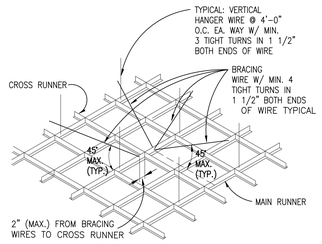

NOTE:
PROVIDE BRACING @ 12' O.C. MAX. EA. WAY & 6' FROM WALL.
INSTALL CEILING PER TITLE 24 AND ASCE 7-5

24 T-BAR CEILING FASTENING
SCALE: 1"=1'-0"

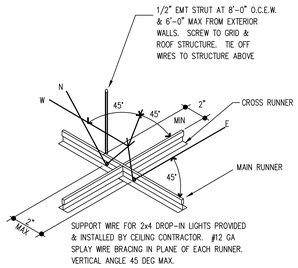

NOTE:
INSTALL CEILING PER TITLE 24 AND ASCE 7-5

14 CEILING COMPRESSION FASTENING
SCALE: 1"=1'-0"

COUNTY OF SAN LUIS OBISPO
DEPARTMENT OF GENERAL SERVICES
1087 SANTA ROSA STREET
SAN LUIS OBISPO, CA 93408
PHONE 805.781.5200

Atascadero Library

RAVARY ALBRECHT & ASSOCIATES, INC.
ARCHITECTURE ENGINEERING
MECHANICAL: GREGORY A. VELAVAS
ELECTRICAL: JIM ALBRECHT, PE
1370 PACIFIC STREET
SAN LUIS OBISPO, CA 93401
PHONE: 805.786.4300 (ALL)
805.543.XXXX (AV)
FAX: 805.786.4792 (ALL)
805.543.0595 (AV)
E-MAIL: INFO@RAVARY-ALBRECHT.COM

REGISTERED ARCHITECT GREGORY ALLEN RAVARY C.S. NO. 22808 09/30/13 STATE OF CALIFORNIA

No.	Revision	Date
1	ADDEND #1 REV4	12.21.12
2	ADDEND #2 REV5	1.10.13

County Facility:

ATASCADERO LIBRARY RENOVATION

6555 CAPISTRANO AVE.
ATASCADERO CA 93422

Project Manager: M. DEMARTINI
Checked By: MD
Client Approval:
Date: 08/20/2012

CONTRACTOR SHALL VERIFY ALL DIMENSIONS AND EXISTING CONDITIONS PRIOR TO COMMENCING WORK. REPORT ANY DISCREPANCIES TO COUNTY PROJECT COORDINATOR OR TO THE PROJECT ARCHITECT.

Project Title : ATASCADERO LIBRARY RENOVATION
6555 CAPISTRANO AVE.
ATASCADERO CA 93422

Sheet Title : REFLECTED CEILING PLAN FIRST STORY

Sheet Number
A3.1
of Sheets

PROJECT No. 417

FILE No.

BIDDING ADDENDUM #2 1-10-13

BID SET 03-26-13
BIDDING ADDENDUM #2 1-10-13
BID SET 03-26-13

BID SET 03-26-13
BID SET 03-26-13

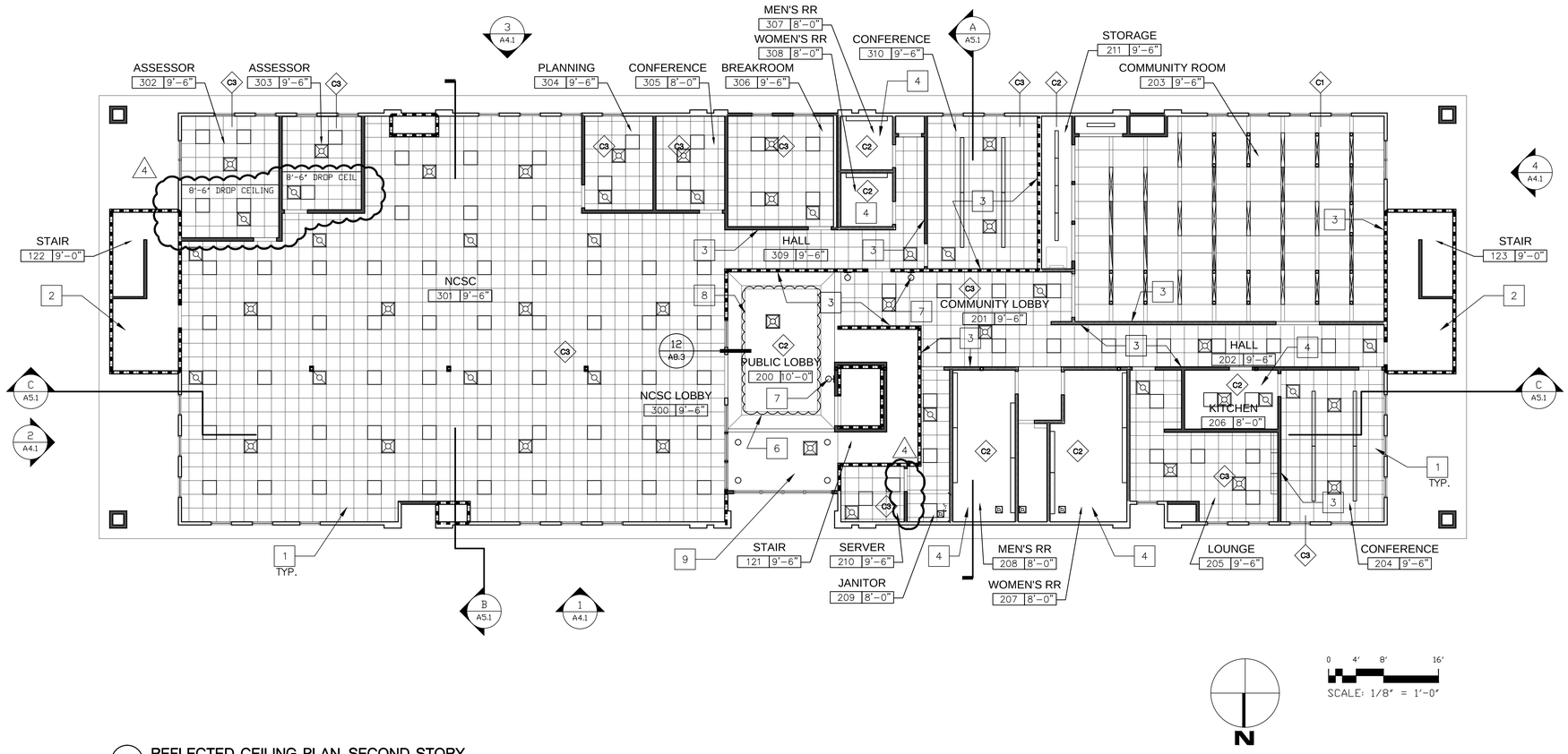

1 REFLECTED CEILING PLAN, SECOND STORY

ROOM NAME — CELING HT
ROOM NUMBER — 000 #

FINISH SCHEDULE	
CEILINGS	
C1	MANU: SUSPENDED PANEL CEILING, CLASS A, ASTM E84 COLOR: USG LOGIX, 30X60 GRID, IDENTITEE DXI, HALCYON PANEL, 1"TH
C2	MANU: 5/8" TYPE 'X' GYP. BOARD COLOR: SHERWIN WILLIAMS, SW 7009 PEARLY WHITE
C3	MANU: SUSPENDED PANEL CEILING, CLASS A, ASTM E84 COLOR: USG HALCYON, IDENTITEE DXI

- RECESSED LINEAR LIGHT FIXTURE. SEE ELECTRICAL
- 5'-0" LIGHT FIXTURE, SEE ELECTRICAL
- 5'-0" LIGHT FIXTURE WITH ADJ. SPOT LIGHT AT EACH END, SEE ELECTRICAL
- RETURN AIR REGISTER, SEE MECHANICAL
- SUPPLY AIR DIFFUSER, SEE MECHANICAL
- T-BAR CEILING LIGHT FIXTURE. SEE ELECTRICAL
- SUPPLY AIR DIFFUSER, SEE MECHANICAL
- RETURN AIR REGISTER, SEE MECHANICAL
- CEILING EXHAUST REGISTER AND TRANSFER GRILL. SEE MECHANICAL
- RECESSED CAN LIGHT, 1-HR HOUSING REQ.

54 FINISH AND SYMBOL LEGEND

SUSPENDED CEILINGS IN SEISMIC DESIGN CATEGORY D SHALL BE DESIGNED AND INSTALLED IN ACCORDANCE WITH ASTM C635, ASTM C636, AND THE CISCA FOR SEISMIC ZONES 3-4 AS MODIFIED BY THE FOLLOWING: [13.5.6.2.2 ASCE 7-05]

A. A HEAVY DUTY T-BAR GRID SYSTEM SHALL BE USED

B. THE WIDTH OF THE PERIMETER SUPPORTING CLOSURE ANGLE SHALL BE NOT LESS THAN 2 INCHES.

C. FOR CEILING AREAS EXCEEDING 2500 SQ. FT., A SEISMIC SEPARATION JOINT OR FULL HEIGHT PARTITION THAT BREAKS THE CEILING UP INTO AREAS NOT EXCEEDING 2500 SQ. FT. SHALL BE PROVIDED UNLESS STRUCTURAL ANALYSES ARE PERFORMED.

D. SPRINKLER HEADS AND OTHER PENETRATIONS SHALL HAVE A 2 INCH OVERSIZE RING, SLEEVE, OR ADAPTER THROUGH THE CEILING TILE TO ALLOW FOR FREE MOVEMENT OF AT LEAST 2 INCH IN ALL HORIZONTAL DIRECTIONS.

E. CHANGES IN CEILING PLAN ELEVATION SHALL BE PROVIDED WITH POSITIVE BRACING.

F. LIGHT FIXTRUES, CABLE TRAYS, AND ELECTRICAL CONDUITS SHALL BE SUPPORTED INDEPENDENTLY OF THE CEILING.

G. SUSPENSION WIRES SHALL NOT BE SMALLER THAN NO. 12 GAGE SPACED AT 4 FEET ON CENTER.

H. SUSPENSION WIRES SHALL NOT HANG MORE THAN 1 IN 6 OUR OF PLUMB.

I. THE PERIMETER ENDS OF EACH CROSS RUNNER AND MAIN RUNNER SHALL BE SUPPORTED A MAXIMUM OF 8" FROM WALL.

J. LATERAL FORCE BRACING MEMBERS SHALL BE SPACED A MINIMUM OF 6" FROM ALL HORIZONTAL PIPING OR DUCT WORK.

44 CEILING GENERAL NOTES

1. NEW T-BAR CEILING WITH NEW LIGHTING, SEE ELECTRICAL
2. EXISTING GYP. BOARD CEILING WITH LIGHTS AND SWITCHING TO REMAIN
3. ARTWORK TO BE HUNG FROM CEILING. SEE DETAIL 34/A3.1. ALL ART EQUIPMENT TO BE PROVIDED BY COUNTY
4. NEW GYP BOARD CEILING. SEE DETAIL 14/A8.3
5. NEW HVAC REGISTERS. SEE MECHANICAL.
6. NEW GYP BOARD SOFFIT
7. NEW WALL SCONCE LIGHT FIXTURE, SEE ELEC.
8. NEW COVE LIGHT FIXTURE, SEE ELEC.
9. NEW SCULPTURE FEATURE AS PROVIDED BY THE COUNTY. PROVIDE CEILING MOUNTED KEY LIGHTING. SEE ELECT. STRUCTURAL SUPPORT AND SEISMIC BRACING WILL BE REQUIRED. DEFERRED SUBMITTAL BY COUNTY FOR REVIEW AND APPROVAL BY ARCHITECT AND BUILDING OFFICIAL.
10. NOT USED

NOTE: SUSPENDED CEILINGS SHALL COMPLY WITH CBC SECTION 808.1 AND ASCE 7-05 SECTION 13.5.6.

NOTE: WALL AND CEILING MATERIALS SHALL NOT EXCEED THE FLAME SPREAD CLASSIFICATION IN CBC TABLE 803.5

NOTE: SPECIAL INSPECTION IS REQ. FOR SUSPENDED CEILING AND ANCHORAGE FOR SEISMIC DESIGN CAT. D.

24 KEY NOTES

COUNTY OF SAN LUIS OBISPO DEPARTMENT OF GENERAL SERVICES
1087 SANTA ROSA STREET
SAN LUIS OBISPO, CA 93408
PHONE 8057815200

RA
ARCHITECTURE • INTERIORS
GREG RAVATT, AIA
MECHANICAL • ELECTRICAL
JIM AURELI, IES, PE
1270 PACIFIC STREET
SAN LUIS OBISPO, CA 93401
PHONE: 805/786-4300 (G.C)
805/543-8342 (M)
FAX: 805/786-4792 (G.C)
805/543-8399 (M)
EMAIL: GREG@RAVATT-ARCHITECTS.COM
RAVATT SCHELLEN & ASSOCIATES, INC.
ARCHITECTURE ENGINEERING

REGISTERED ARCHITECT GREGORY ALLEN RAVATT LIC. NO. C20808 09/30/13 STATE OF CALIFORNIA

No.	Revision	Date
	ADDEND #1 REV4	12.21.12

County Facility:

ATASCADERO LIBRARY RENOVATION

6555 CAPISTRANO AVE.
ATASCADERO CA 93422

Project Manager: M. DEMARTINI
Checked By: MD
Client Approval:
Date: 08/20/2012

CONTRACTOR SHALL VERIFY ALL DIMENSIONS AND EXISTING CONDITIONS PRIOR TO COMMENCING WORK. REPORT ANY DISCREPANCIES TO COUNTY PROJECT COORDINATOR OR TO THE PROJECT ARCHITECT.

Project Title : ATASCADERO LIBRARY RENOVATION
6555 CAPISTRANO AVE
ATASCADERO CA 93422

Sheet Title : REFLECTED CEILING PLAN SECOND STORY

Sheet Number
A3.2
of Sheets

PROJECT No. 417

FILE No.

BIDDING ADDENDUM #1 12-21-12

BIDDING ADDENDUM #1 12-21-12

BID SET 03-26-13
BID SET 03-26-13

BID SET 03-26-13
BID SET 03-26-13

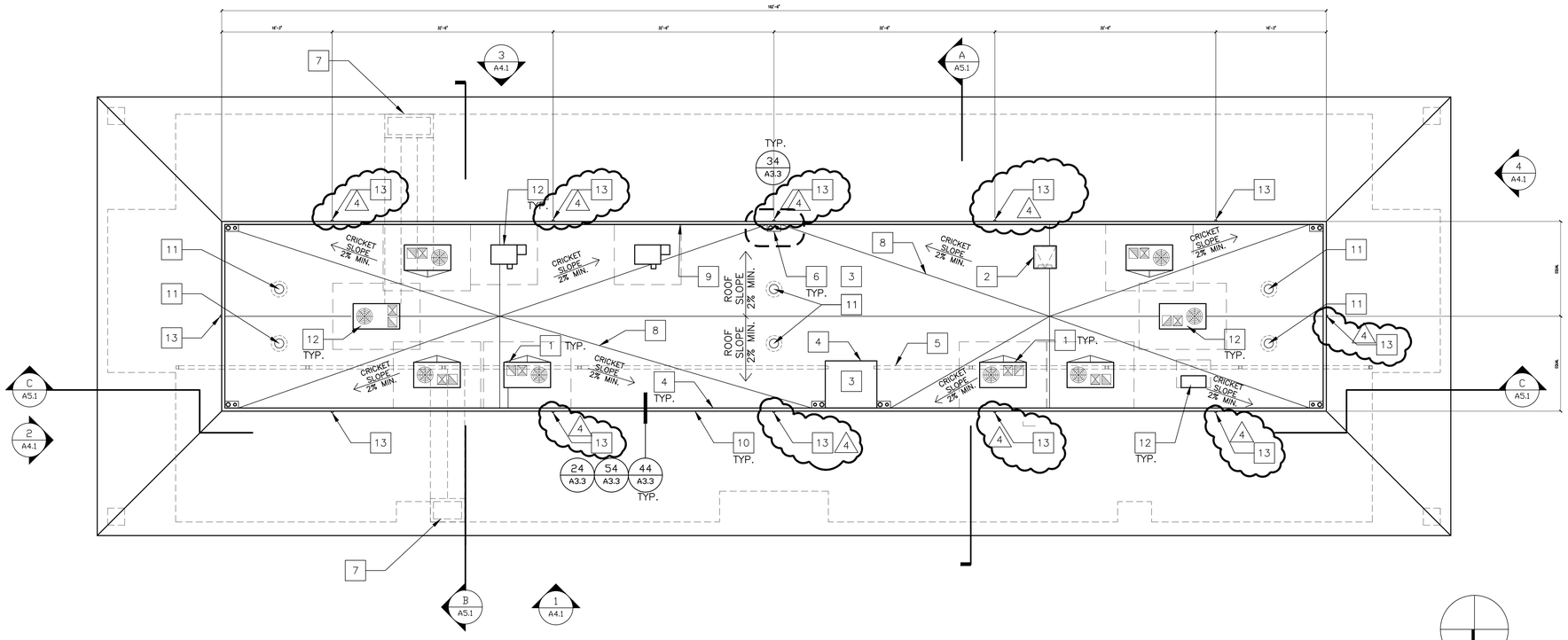

1 ROOF PLAN

SCALE: 1/8" = 1'-0"

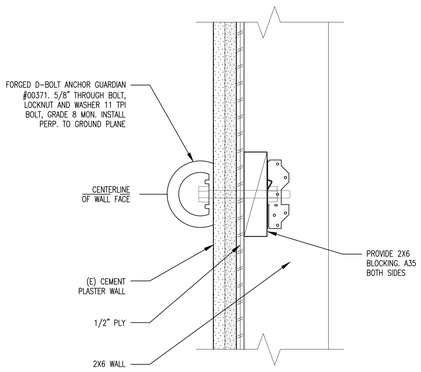

54 ANCHOR POINT DETAIL

SCALE: 3"=1'-0"

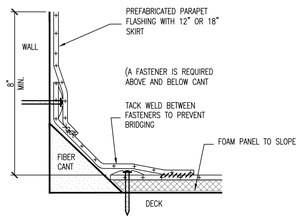

44 PARAPET WITH CANT

SCALE: N.T.S.

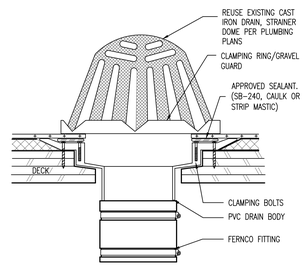

34 PVC ROOF DRAIN DETAIL

SCALE: N.T.S.

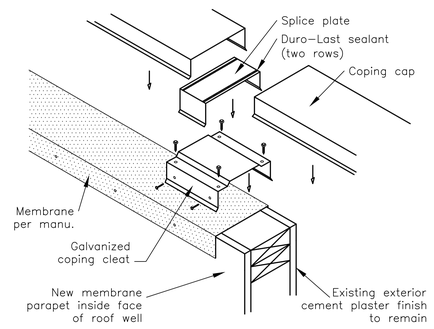

Note 1: Install the coping cleat using four hex head screws with neoprene washers. Face nail the cleat using two roofing nails.

Note 2: Install the splice plate by locating it onto the center of the coping cleat. Apply a bead of an approved Duro-Last sealant or equivalent on both sides of the top surface of the splice plate. Do not fasten.

Note 3: Install coping cap over top of the splice plate. Be sure to leave a ¼-inch gap between sections of coping to allow for expansion and contraction.

Note 4: All joining surfaces such as joints, splices, corners, and end caps must have an approved sealant applied to them.

SNAP COPING CAP

24 PARAPET CAP

SCALE: N.T.S.

1. NEW HVAC UNIT AND SUPPORT CURB, SEE STRUCTURAL AND MECHANICAL
2. NEW ROOF ACCESS HATCH. 48"X48" SELF FLASHING ACCESS HATCH. BILCO TYPE F W/ FALL PROTECTION GRATE OR EQUIV.
3. NEW THERMOPLASTIC REFLECTIVE MEMBRANE ROOF PER SPEC. DURO-LAST OR EQUIV. BUILD UP EXISTING SUBSTRATE AS RELOCATED TO SHED WATER.
4. NEW ½" PLYWOOD SUBSTRATE, MEMBRANE PARAPET WITH BASE FLASH AND CAP FLASH INSIDE FACE OF ROOF WELL ONLY.
5. LINE OF BEAM BELOW
6. EXISTING HI/LOW ROOF DRAIN TO CONNECT TO EXISTING RAIN WATER LEADER
7. 1-HR CHASE BELOW
8. NEW BUILT-UP CRICKET. 2% MAX. SLOPE TO DRAIN
9. PROVIDE AND INSTALL SURFACE MOUNT CONDUIT AND EXTERIOR GRADE RECEPTACLES TO REPLACE EXISTING
10. EXISTING EXTERIOR CEMENT PLASTER FINISH TO REMAIN
11. NEW SELF FLASHING ATTIC VENTILATORS
12. PREFAB STRUCTURAL CURB. SEE MECH. SEE STRUCT.
13. PROVIDE AND INSTALL FALL PROTECTION ANCHOR PER DETAIL 54/A3.3

14 KEY NOTES

COUNTY OF SAN LUIS OBISPO
DEPARTMENT OF GENERAL SERVICES
1087 SANTA ROSA STREET
SAN LUIS OBISPO, CA 93408
PHONE 8057615200

Atascadero Library

RA
RAVATT/ALBRECHT & ASSOCIATES, INC.
ARCHITECTURE ■ INTERIORS
GREEN ■ ADAPTIVE REUSE
MECHANICAL ■ ELECTRICAL
PLUMBING ■ FIRE
1570 PACIFIC STREET
SAN LUIS OBISPO, CA 93401
PHONE: (805)786-0300 SLO
(805)928-5002 SM
FAX: (805)786-0702 SLO
(805)928-0595 SM
E-MAIL: STEVE@RAALBRECHT.COM

REGISTERED ARCHITECT
GREGORY ALLEN RAVATT
C.S.L. NO. C20808
09/30/13
STATE OF CALIFORNIA

No.	Revision	Date
	ADDEND #1 REV4	12.21.12

County Facility:

ATASCADERO LIBRARY RENOVATION

6555 CAPISTRANO AVE.
ATASCADERO CA 93422

Project Manager: M. DEMARTINI
Checked By: MD
Client Approval:
Date: 08/20/2012

CONTRACTOR SHALL VERIFY ALL DIMENSIONS AND EXISTING CONDITIONS PRIOR TO COMMENCING WORK. REPORT ANY DISCREPANCIES TO COUNTY PROJECT COORDINATOR OR TO THE PROJECT ARCHITECT.

Project Title : ATASCADERO LIBRARY RENOVATION
6555 CAPISTRANO AVE.
ATASCADERO CA 93422

Sheet Title : ROOF PLAN

Sheet Number
A3.3
of Sheets

PROJECT No. 417

FILE No.

BIDDING ADDENDUM #1 12-21-12

BID SET 03-26-13
BIDDING ADDENDUM #1 12-21-12
BID SET 03-26-13

BID SET 03-26-13
BID SET 03-26-13

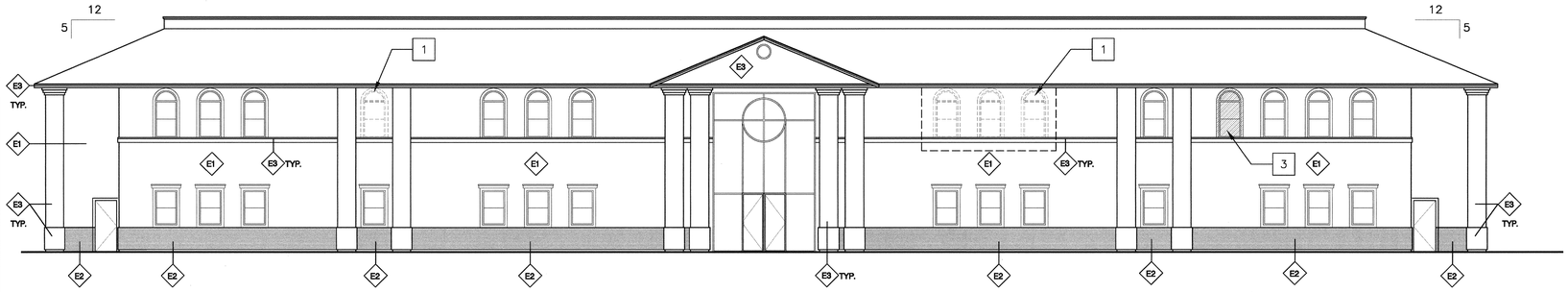

1 NORTH EXTERIOR ELEVATION

SCALE: 1/8" = 1'-0"

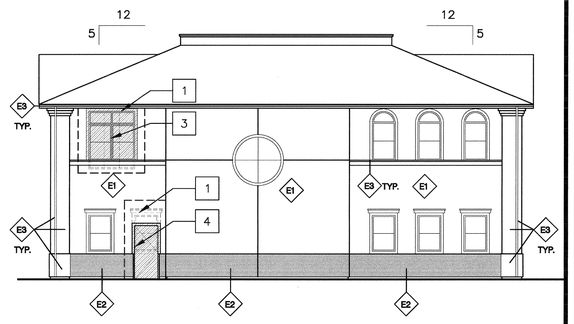

2 EAST EXTERIOR ELEVATION

SCALE: 1/8" = 1'-0"

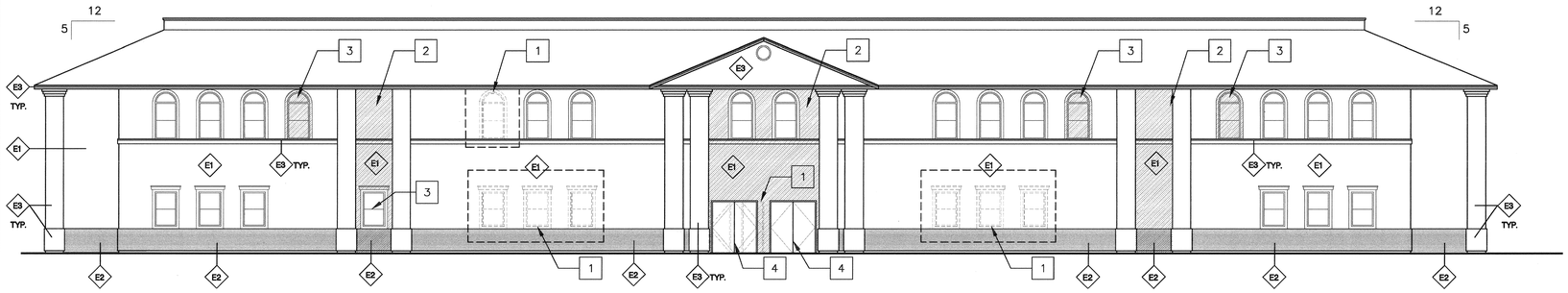

3 SOUTH EXTERIOR ELEVATION

SCALE: 1/8" = 1'-0"

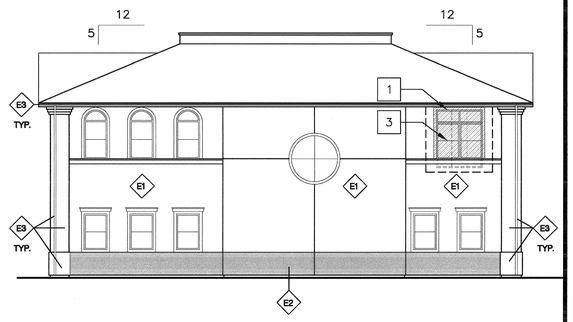

4 WEST EXTERIOR ELEVATION

SCALE: 1/8" = 1'-0"

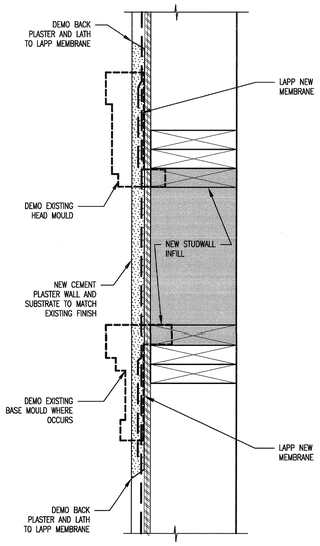

54 DEMO/FINISH DETAIL AT OPENING

SCALE: NTS

BID ALTERNATE #1: PREPARE AND PAINT BUILDING EXTERIOR.
2 COATS, 25 YEAR WARRANTY MIN.

44 LEGEND

- EXTENT OF DEMOLITION
  DEMO EXISTING WINDOW/DOOR
- BASE PAINT LOCATION
- NEW WALL LOCATION

43 FINISH NOTES

EXTERIOR FINISHES	
E1	TYPE: BODY – SHERWIN WILLIAMS COLOR: DUNN EDWARDS, INSIDE PASSAGE, DEC764
E2	TYPE: BASE – SHERWIN WILLIAMS COLOR: DUNN EDWARDS, EGYPTIAN SAND, DE6027
E3	TYPE: ACCENT – SHERWIN WILLIAMS COLOR: DUNN EDWARDS, PEARL NECKLACE, DEW343

24 KEY NOTES

1. DEMO EXISTING WINDOW AND DOOR. PATCH, REPAIR, AND PAINT AT REMOVED WINDOW LOCATION. MATCH EXISTING FINISH. SEE DETAIL 54/A4.1
2. NEW WALL WITH CEMENT PLASTER FINISH, MATCH EXISTING FINISH, PAINT. (SHOWN SHADED)
3. NEW WINDOW, SEE SCHEDULE
4. NEW DOOR, SEE SCHEDULE

COUNTY OF SAN LUIS OBISPO
DEPARTMENT OF GENERAL SERVICES
1087 SANTA ROSA STREET
SAN LUIS OBISPO, CA 93408
PHONE 8057812200

RAYATT ALBRECHT & ASSOCIATES, INC.
ARCHITECTURE INTERIORS CIVIL RAYATT, AIA MECHANICAL ELECTRICAL JPA ALBRECHT, PE
870 PACIFIC STREET
SAN LUIS OBISPO CA 93401
PHONE: 8057861458 SLO
8059282002 SM
FAX: 8057862702 SLO
8059282095 SM
EMAIL:INFO@RAYATTALBRECHT.COM

REGISTERED ARCHITECT GREGORY ALLEN RAYATT LIC. NO. C22806 09/30/13 STATE OF CALIFORNIA

No.	Revision	Date
	PLANCHECK REV1	9.26.12
	PLANCHECK REV2	10.24.12
	PLANCHECK REV3	11.19.12

County Facility:

ATASCADERO LIBRARY RENOVATION
6555 CAPISTRANO AVE.
ATASCADERO CA 93422

Project Manager: M. DEMARTINI
Checked By: MID
Client Approval:
Date: 08/20/2012

CONTRACTOR SHALL VERIFY ALL DIMENSIONS AND EXISTING CONDITIONS PRIOR TO COMMENCING WORK. REPORT ANY DISCREPANCIES TO COUNTY PROJECT COORDINATOR OR TO THE PROJECT ARCHITECT.

Project Title: ATASCADERO LIBRARY RENOVATION
6555 CAPISTRANO AVE.
ATASCADERO CA 93422

Sheet Title: EXTERIOR ELEVATIONS

Sheet Number
A4.1
of Sheets

PROJECT No. 417

FILE No.

BIDDING SET 11-19-12

BID SET 03-26-13
BIDDING SET 11-19-12
BID SET 03-26-13

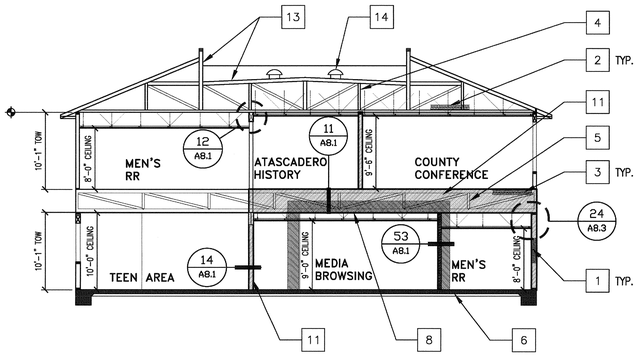

A BUILDING SECTION

SCALE: 1/8" = 1'-0"

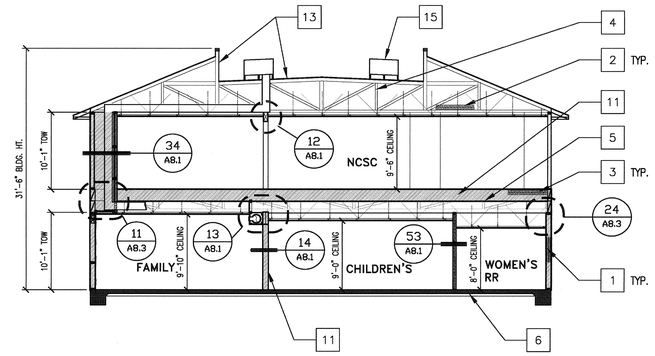

B BUILDING SECTION

SCALE: 1/8" = 1'-0"

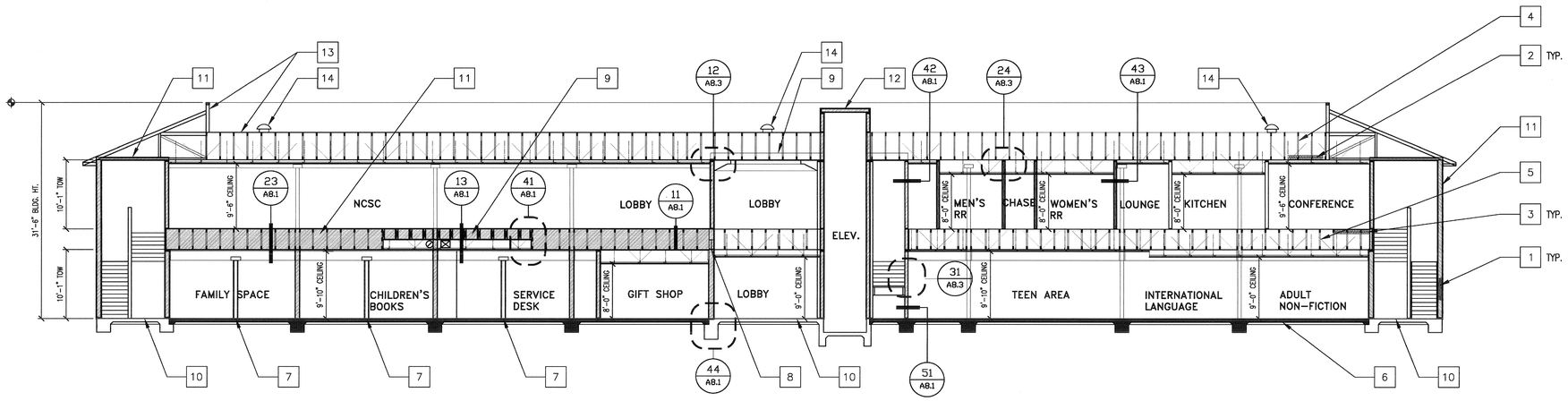

C BUILDING SECTION

SCALE: 1/8" = 1'-0"

SOUNDWALL PER DETAILS

1-HR ASSEMBLY PER DETAILS

34 SYMBOL LEGEND

1. WALL INSULATION R-19
2. CEILING INSULATION R-30
3. FLOOR INSULATION R-19
4. EXISTING ROOF TRUSSES
5. EXISTING FLOOR TRUSSES
6. NEW CONCRETE SLAB
7. NEW STEEL COLUMN
8. NEW MOMENT FRAME, SEE FLOOR PLAN
9. NEW BEAM JOIST
10. EXISTING CONCRETE FOUNDATION TO REMAIN
11. 1-HR ASSEMBLY, SHOWN AS GREY HATCH
12. 1-HR ASSEMBLY AT ELEVATOR SHAFT TO REMAIN
13. NEW ROOF ASSEMBLY. SEE ROOF PLAN
14. NEW ATTIC VENT. SEE ROOF PLAN
15. NEW MECH EQUIP. SEE MECH

14 KEY NOTES

COUNTY OF SAN LUIS OBISPO
DEPARTMENT OF GENERAL SERVICES
1087 SANTA ROSA STREET
SAN LUIS OBISPO, CA 93408
PHONE: 805.781.5200

RAVATT ALBRECHT & ASSOCIATES, INC.
ARCHITECTURE, INTERIORS
GREG RAVATT, AIA
MECHANICAL, ELECTRICAL
JIM ALBRECHT, PE
1215 PACIFIC STREET
SAN LUIS OBISPO CA 93401
PHONE: 805.786.4398 SLO
805.928.5002 SM
FAX: 805.786.4792 SLO
805.928.0095 SM
EMAIL: OFFICE@RAVATTALBRECHT.COM

REGISTERED ARCHITECT GREGORY ALLEN RAVATT LIC. NO. C-12808 STATE OF CALIFORNIA

No.	Revision	Date
	PLANCHECK REV1	9.26.12
	PLANCHECK REV2	10.24.12
	PLANCHECK REV3	11.19.12

County Facility:

ATASCADERO LIBRARY RENOVATION

6555 CAPISTRANO AVE.
ATASCADERO CA 93422

Project Manager: M. DEMARTINI
Checked By: MID
Client Approval:
Date: 08/20/2012

CONTRACTOR SHALL VERIFY ALL DIMENSIONS AND EXISTING CONDITIONS PRIOR TO COMMENCING WORK. REPORT ANY DISCREPANCIES TO COUNTY PROJECT COORDINATOR OR TO THE PROJECT ARCHITECT.

Project Title : ATASCADERO LIBRARY RENOVATION
6555 CAPISTRANO AVE
ATASCADERO CA 93422

Sheet Title : BUILDING SECTIONS

Sheet Number
A5.1
of Sheets

PROJECT No. 417

FILE No.

BIDDING SET 11-19-12

BID SET 03-26-13
BID SET 03-26-13

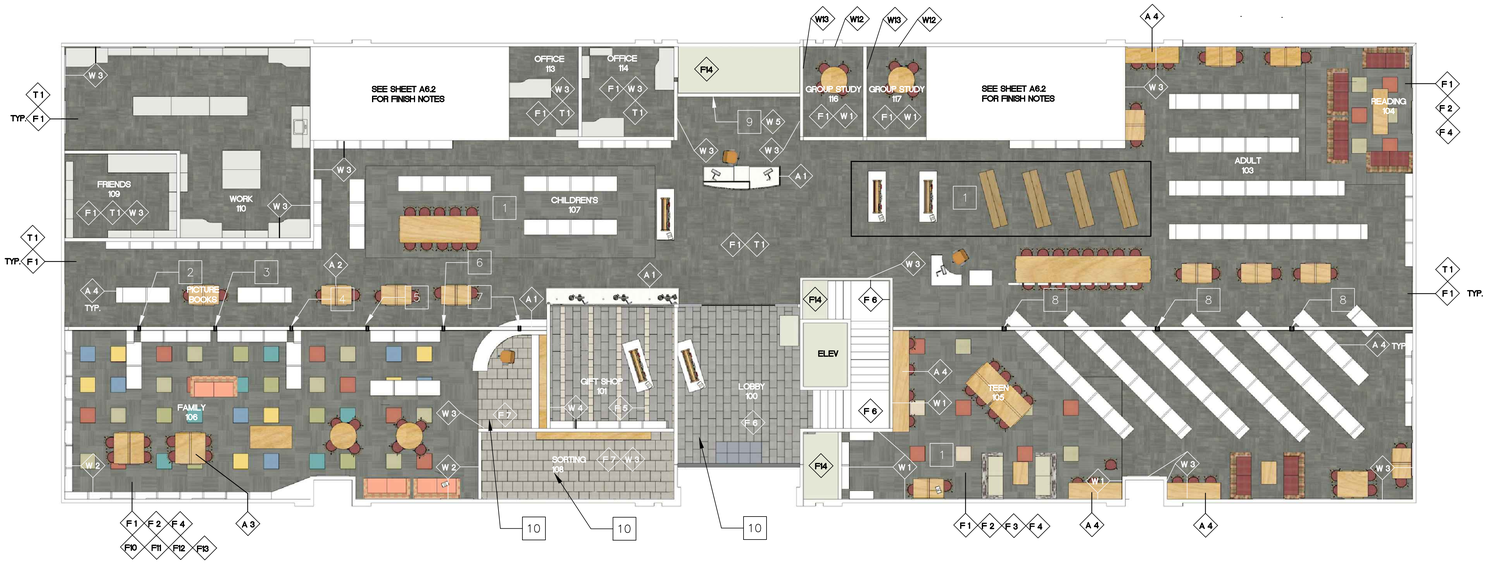

1 FINISH PLAN, FIRST STORY

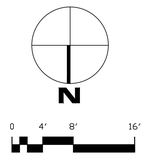

53 WOMEN'S RESTROOM

43 MEN'S RESTROOM

1. CRISS/CROSS PATTERN INSTALLATION IN CARPET, THIS LOCATION
2. PAINT COLUMN SHAFT, CAPE VERDE, SW6482, SEE DETAIL 14/A8.3
3. PAINT COLUMN SHAFT, CAJUN RED, SW0008, SEE DETAIL 14/A8.3
4. PAINT COLUMN SHAFT, LEMON TWIST, SW6909, SEE DETAIL 14/A8.3
5. PAINT COLUMN SHAFT, DOWN POUR, SW6516, SEE DETAIL 14/A8.3
6. PAINT COLUMN SHAFT, LEAPFROG, SW6431, SEE DETAIL 14/A8.3
7. PAINT COLUMN SHAFT, DAFFODIL, SW6901, SEE DETAIL 14/A8.3
8. PAINT COLUMN SHAFT, RUSKIN ROOM GREEN, SW0042, SEE DETAIL 14/A8.3
9. DONOR TREE WALL. WALL COLOR AND DESIGN BY LIBRARY
10. PROVIDE BASE REVEAL PER DETAIL 44/A8.1

23 KEY NOTES

WALL FINISHES	
W1	TYPE: WALL ACCENT COLOR COLOR: MARTHA STEWART LIVING, SHORTBREAD MSL077
W2	TYPE: WALL ACCENT COLOR COLOR: BENJAMIN MOORE, AFFINITY, AVAGE AF-420
W3	TYPE: WALL COLOR COLOR: BENJAMIN MOORE, AFFINITY, ETIQUETTE AF-50
W4	TYPE: WALL COLOR, BENJAMIN MOORE COLOR: HAZY SKIES, OC-48
W5	TYPE: MURAL WALL COLOR: AS SELECTED BY COUNTY
W6	TYPE: CROSSVILLE TILE COLOR: RETRO ACTIVE, 3X12 HORIZ, MAPLE SUGAR
W7	TYPE: CROSSVILLE TILE COLOR: COLOR BLOX TOO, 12X18 VERT., CHOPSTICKS
W8	TYPE: MARLITE COLOR: FRP WAINSCOT, S118G ALMOND
W9	TYPE: SHERWIN WILLIAMS COLOR: SW7009, PEARLY WHITE
W10	TYPE: CROSSVILLE TILE COLOR: RETRO ACTIVE, 3X12 HORIZ., SEA BREEZE
W11	TYPE: CROSSVILLE TILE COLOR: COLOR BLOX TOO, 12X18 VERT., PAJAMA PARTY
W12	TYPE: KOROSEAL WALL TALKERS COLOR: ERASE RITE, 09 LIGHT GRAY
W13	TYPE: KOROSEAL WALL TALKERS COLOR: TAC WALL, 04 STONE
W14	TYPE: CHAIR RAIL, KOROSEAL BW40 COLOR: MAPLE, RO STAIN, OVERCAST INSERT, ALUM. RETAINER
FLOOR FINISHES	
F1	TYPE: CARPET COLOR COLOR: SHAW CONTRACT GROUP, DIFFUSE 59575, MOVEMENT 75481
F2	TYPE: CARPET ACCENT COLOR COLOR: SHAW, TRU COLOURS TILE 59368, RUSSET 68665
F3	TYPE: CARPET ACCENT COLOR COLOR: SHAW, TRU COLOURS TILE 59368, TUMBLEWEED 68145
F4	TYPE: CARPET ACCENT COLOR COLOR: SHAW, TRU COLOURS TILE 59368, FESCUE 68545
F5	TYPE: LOBBY ACCENT TILE, CROSSVILLE PORCELAIN STONE TILE COLOR: PLAN, 12X24 RUN, PN01 SAND
F6	TYPE: LOBBY TILE, CROSSVILLE PORCELAIN STONE TILE COLOR: PLAN, 12X24 RUN, PN03 SMOKE
F7	TYPE: CROSSVILLE PORCELAIN STONE TILE COLOR: STRUCTURE, 12X12 RUN, AV223 SHALE
F8	TYPE: CROSSVILLE PORCELAIN STONE TILE COLOR: STRUCTURE, 12X24., AV221 GYPSUM
F9	TYPE: C&A CARPET COLOR: INFINITY, DAKOTA PLAINS
F10	TYPE: CARPET ACCENT COLOR COLOR: SHAW, TRU COLOURS TILE 59368, SAXONY BLUE 95405
F11	TYPE: CARPET ACCENT COLOR COLOR: SHAW, TRU COLOURS TILE 59368, MARINA 68415
F12	TYPE: CARPET ACCENT COLOR COLOR: SHAW, TRU COLOURS TILE 59368, CITRUS 68201
F13	TYPE: CARPET ACCENT COLOR COLOR: SHAW, TRU COLOURS TILE 59368, BRITE GREEN 68325
F14	TYPE: CONCRETE COLOR: SHERWIN WILLIAMS EPOXY SEALER
TRIM	
T1	TYPE: COLOR INTEGRATED WALL BASE COLOR: ARMSTRONG, 20 OYSTER
T2	TYPE: DOOR TRIM COLOR: BENJAMIN MOORE, AFFINITY, FUSION AF-675
T3	TYPE: CUSTOM BUILDING PRODUCTS, GROUT COLOR: CANVAS
T4	TYPE: CUSTOM BUILDING PRODUCTS, GROUT COLOR: CANVAS
T5	TYPE: CUSTOM BUILDING PRODUCTS, GROUT COLOR: CHAPARRAL
T6	TYPE: CUSTOM BUILDING PRODUCTS, GROUT COLOR: OCEAN BLUE
SURFACES	
A1	TYPE: HORIZONTAL SOLID SURFACE COLOR: AVONITE SURFACES, FOUNDATIONS, NORDIC F1-9119
A2	TYPE: HORIZONTAL SOLID SURFACE COLOR: FORMICA, FLAX GAUZE, 7708-58, MATTE COLLECTION
A3	TYPE: HORIZONTAL SOLID SURFACE COLOR: FORMICA, NEUTRAL WEFT, 5875-58, MATTE COLLECTION
A4	TYPE: HORIZONTAL AND VERTICAL LAMINATE SURFACE COLOR: FORMICA, GOLD SPECKLE MAPLE, 1531 VL
A5	TYPE: BOBRICK PARTITION COLOR: DURALINE 1182, S-463, ANTIQUE WHITE
A6	TYPE: AVONITE SOLID SURFACE LAVATORY COLOR: AZTEC BROWN K3-7700
A7	TYPE: BOBRICK PARTITION COLOR: DURALINE 1182, S-463, ANTIQUE WHITE
A8	TYPE: AVONITE SOLID SURFACE LAVATORY COLOR: CIRRUS D3-8603

14 FINISH NOTES

54 CHILDREN'S AREA

44 TEEN AREA

- WALL AND CEILING MATERIALS SHALL NOT EXCEED THE FLAME SPREAD CLASSIFICATION IN CBC TABLE 803.5
- IF CARPET OR CARPET TILE IS USED ON A GROUND OR FLOOR SURFACE, IT SHALL BE SECURELY ATTACHED; HAVE A FIRM CUSHION, PAD OR BACKING OR NO CUSHION OR PAD; AND HAVE A LEVEL LOOP, TEXTURED LOOP, LEVEL CUT PILE, OR LEVEL CUT/UNCUT PILE TEXTURE. THE MAXIMUM PILE HEIGHT SHALL BE ½". EXPOSED EDGES OF CARPET SHALL BE FASTENED TO FLOOR SURFACES AND HAVE TRIM ALONG THE ENTIRE LENGTH OF THE EXPOSED EDGE. CARPET EDGE TRIM SHALL COMPLY WITH SECTION 1124B.2. [1124B.3 CBC]
- INTERIOR SURFACES. IN OTHER THAN DWELLING UNITS, TOILET ROOMS FLOORS SHALL HAVE A SMOOTH, HARD NONABSORBENT SURFACE SUCH AS PORTLAND CEMENT, CONCRETE, CERAMIC TILE OR OTHER APPROVED MATERIAL WHICH EXTENDS UPWARD ONTO THE WALLS AT LEAST 5 INCHES. WALLS WITHIN WATER CLOSET COMPARTMENTS AND WALLS WITHIN 24 INCHES OF THE FRONT AND SIDES OF URINALS SHALL BE SIMILARLY FINISHED TO A HEIGHT OF 48 INCHES AND, EXCEPT FOR STRUCTURAL ELEMENTS; THE MATERIALS USED IN SUCH WALLS SHALL BE A TYPE WHICH IS NOT ADVERSELY AFFECTED BY MOISTURE. [1115B.3.2.5 CBC]

24 GENERAL NOTES

COUNTY OF SAN LUIS OBISPO
DEPARTMENT OF GENERAL SERVICES
1087 SANTA ROSA STREET
SAN LUIS OBISPO, CA 93408
PHONE 805.781.5200

RAVATT-ALBRECHT & ASSOCIATES, INC.
ARCHITECTURE AND INTERIOR DESIGN

REGISTERED ARCHITECT GREGORY ALLEN RAVATT LICENSE NO. C-20808 09/20/13 STATE OF CALIFORNIA

No.	Revision	Date
	PLANCHECK REV1	9.26.12
	PLANCHECK REV2	10.24.12
	PLANCHECK REV3	11.19.12

County Facility:

ATASCADERO LIBRARY RENOVATION

6555 CAPISTRANO AVE.
ATASCADERO CA 93422

Project Manager: M. DEMARTINI
Checked By: MDDR
Client Approval: Client Approval
Date: 08/20/2012

CONTRACTOR SHALL VERIFY ALL DIMENSIONS AND EXISTING CONDITIONS PRIOR TO COMMENCING WORK. REPORT ANY DISCREPANCIES TO COUNTY PROJECT COORDINATOR OR TO THE PROJECT ARCHITECT.

Project Title: ATASCADERO LIBRARY RENOVATION
6555 CAPISTRANO AVE
ATASCADERO CA 93422

Sheet Title: FINISH PLAN FIRST STORY

Sheet Number
A6.1
of Sheets

PROJECT No. 417

FILE No.

BIDDING SET 11-19-12

BIDDING SET 11-19-12
BID SET 03-26-13
BID SET 03-26-13
BID SET 03-26-13

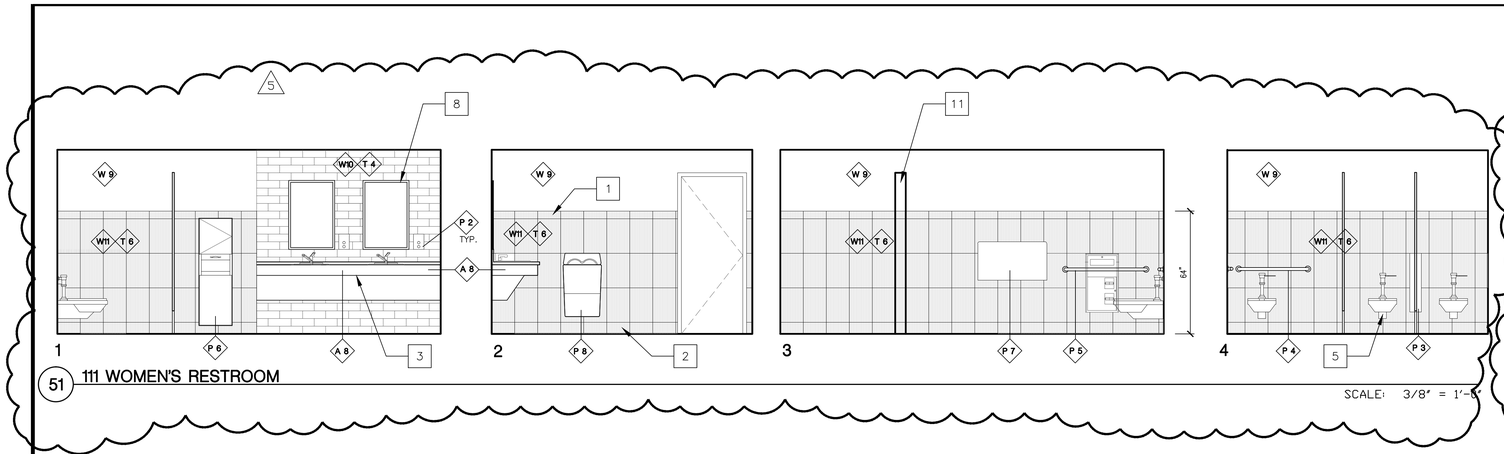

51 111 WOMEN'S RESTROOM

SCALE: 3/8" = 1'-0"

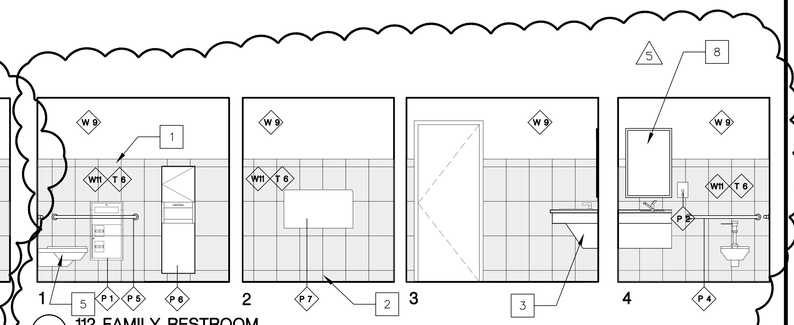

21 112 FAMILY RESTROOM

SCALE: 3/8" = 1'-0"

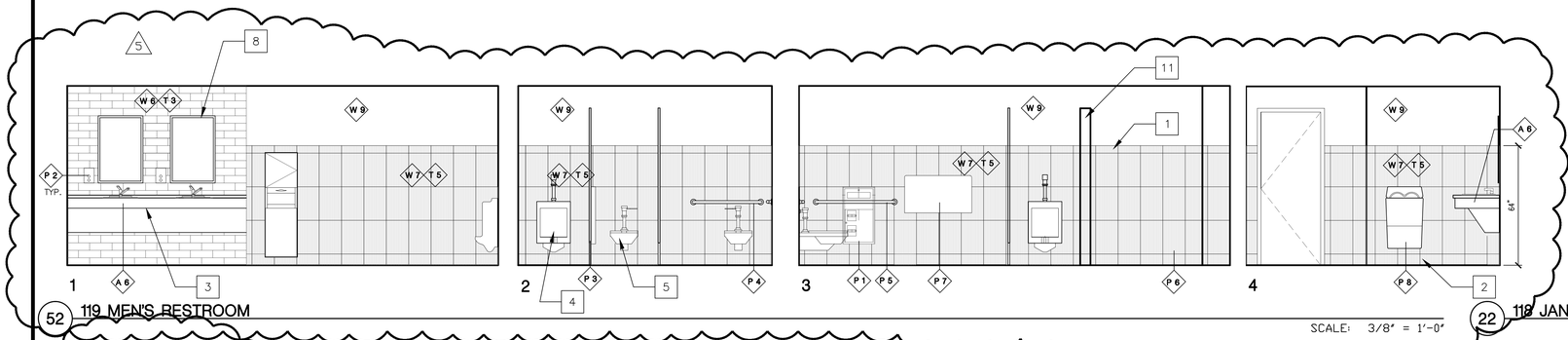

52 119 MEN'S RESTROOM

SCALE: 3/8" = 1'-0"

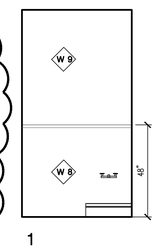

22 118 JANITOR'S CLOSET

SCALE: 3/8" = 1'-0"

1. 4 X 12 CERAMIC BULLNOSE TILE.
2. 6 X 12 CERAMIC COVE TILE.
3. ADA ACCESSIBLE LAVATORIES.
4. ADA ACCESSIBLE URINAL. SEE PLUMBING SHEETS
5. ADA ACCESSIBLE TOILET. SEE PLUMBING SHEETS
6. NOT USED
7. NEW FLOOR MOUNTED JANITOR'S SINK. SEE PLUMBING SHEETS
8. 24"X30" BEVELED EDGE MIRROR
9. WALL MOUNTED ADJUSTABLE SHELVING. RAKKS E-STANDARD (RECESSED). LAMINATE SHELVES
10. NOT USED
11. 7' PARTIAL HEIGHT WALL

12 KEY NOTES

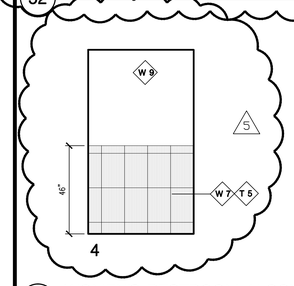

53 WOMEN'S RESTROOM ALCOVE

SCALE: 3/8" = 1'-0"

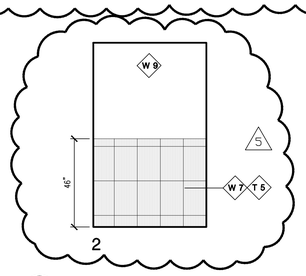

43 MEN'S RESTROOM ALCOVE

SCALE: 3/8" = 1'-0"

WALL FINISHES	
W 6	TYPE: CROSSVILLE TILE COLOR: RETRO ACTIVE, 3X12 HORIZ, MAPLE SUGAR
W 7	TYPE: CROSSVILLE TILE COLOR: COLOR BLOX TOO, 12X18 VERT., CHOPSTICKS
W 8	TYPE: MARLITE COLOR: FRP WAINSCOT, ARTIZAN 5408
W 9	TYPE: SHERWIN WILLIAMS COLOR: SW7009, PEARLY WHITE
W10	TYPE: CROSSVILLE TILE COLOR: RETRO ACTIVE, 3X12 HORIZ., SEA BREEZE
W11	TYPE: CROSSVILLE TILE COLOR: COLOR BLOX TOO, 12X18 VERT., PAJAMA PARTY
FLOOR FINISHES	
F 7	TYPE: CROSSVILLE PORCELAIN STONE TILE COLOR: STRUCTURE, 12X12 RUN, AV223 SHALE
F 8	TYPE: CROSSVILLE PORCELAIN STONE TILE COLOR: STRUCTURE, 12X24., AV221 GYPSUM
TRIM	
T 3	TYPE: CUSTOM BUILDING PRODUCTS, GROUT COLOR: CANVAS
T 4	TYPE: CUSTOM BUILDING PRODUCTS, GROUT COLOR: CANVAS
T 5	TYPE: CUSTOM BUILDING PRODUCTS, GROUT COLOR: CHAPARRAL
T 6	TYPE: CUSTOM BUILDING PRODUCTS, GROUT COLOR: OCEAN BLUE
SURFACES	
A 5	TYPE: BOBRICK PARTITION COLOR: DURALINE 1182, S-463, ANTIQUE WHITE
A 6	TYPE: AVONITE SOLID SURFACE LAVATORY COLOR: AZTEC BROWN K3-7700
A 7	TYPE: BOBRICK PARTITION COLOR: DURALINE 1182, S-463, ANTIQUE WHITE
A 8	TYPE: AVONITE SOLID SURFACE LAVATORY COLOR: CIRRUS D3-8603
ACCESSORIES	
P 1	MANU: BOBRICK UNITIZED SEAT COVER AND TOILET TISSUE DISPENSER, B-3474 COLOR: STAINLESS STEEL
P 2	MANU: SURFACE MOUNT AUTOMATIC SOAP DISPENSER. ASI #20364 COLOR: STAINLESS STEEL
P 3	MANU: BOBRICK UNITIZED SEAT COVER AND TOILET TISSUE DISPENSER, B-3471, PARTITION MOUNT COLOR: STAINLESS STEEL
P 4	MANU: 1-1/2"ø X 36" SURFACE MOUNT GRAB BAR. ASI #3200 COLOR: STAINLESS STEEL
P 5	MANU: 1-1/2"ø X 42" SURFACE MOUNT GRAB BAR. ASI #3200 COLOR: STAINLESS STEEL
P 6	MANU: PAPER TOWEL DISPENSER AND WASTE COLOR: STEEL ASI 20469
P 7	MANU: SURFACE MOUNTED BABY CHANGING STATION. ASI #9013-9 COLOR: STAINLESS STEEL
P 8	MANU: DYSON AIRBLADE. AB02 COLOR: ALUMINUM HOUSING

14 FINISH AND ACCESSORY SCHEDULE

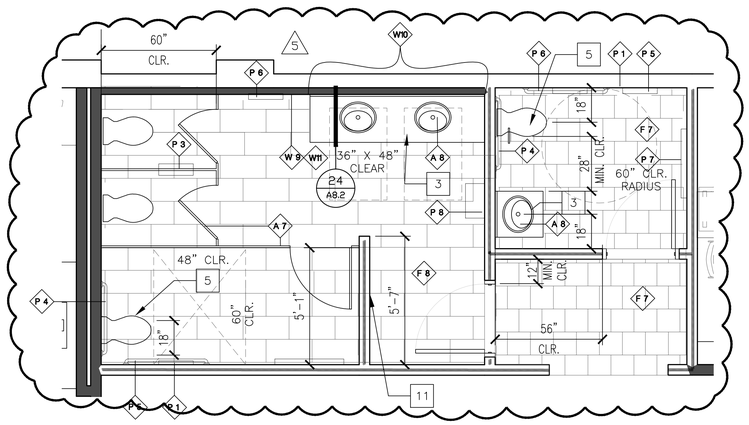

NOTE: SEE 53/T2 FOR SINGLE USE RESTROOM DETAILS

54 FIRST STORY WOMEN'S RESTROOM

SCALE: 3/8" = 1'-0"

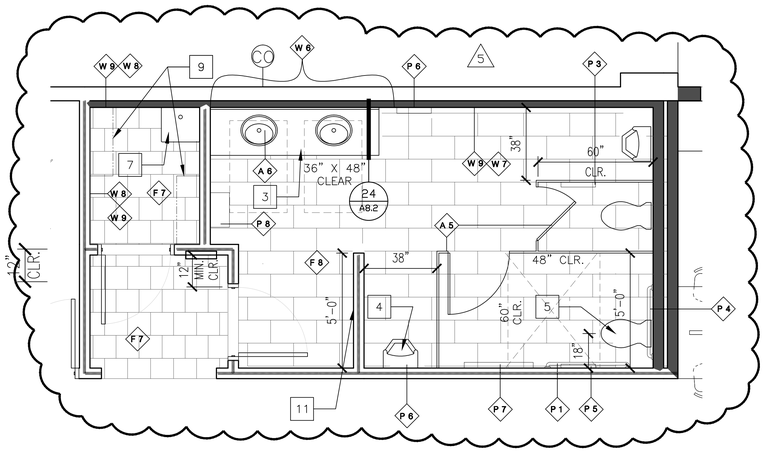

34 FIRST STORY MEN'S RESTROOM

SCALE: 3/8" = 1'-0"

COUNTY OF SAN LUIS OBISPO
DEPARTMENT OF GENERAL SERVICES
1087 SANTA ROSA STREET
SAN LUIS OBISPO, CA 93408
PHONE 8057815200

RAYMATT ROBERTS & ASSOCIATES, INC.
ARCHITECTURE ■ INTERIORS
CERTIFICATE OF AUTHORITY
MECHANICAL ■ ELECTRICAL
PLUMBING ■ FIRE LIFE SAFETY
1570 PACIFIC STREET
SAN LUIS OBISPO, CA 93401
PHONE 805.786.8399 X-25
805.928.5032 SM
FAX 805.786.8792 X-25
805.928.8995 SM
E-MAIL: RR@RAYMATTROBERTS.COM

REGISTERED ARCHITECT
GREGORY ALLEN RAYMATT
LIC. NO. C20808
09/30/13
STATE OF CALIFORNIA

No.	Revision	Date
	ADDEND #1 REV4	12.21.12
	ADDEND #2 REV5	1.10.13

County Facility:

ATASCADERO LIBRARY RENOVATION

6555 CAPISTRANO AVE.
ATASCADERO CA 93422

Project Manager: M. DEMARTINI
Checked By: MD
Client Approval:
Date: 08/20/2012

CONTRACTOR SHALL VERIFY ALL DIMENSIONS AND EXISTING CONDITIONS PRIOR TO COMMENCING WORK. REPORT ANY DISCREPANCIES TO COUNTY PROJECT COORDINATOR OR TO THE PROJECT ARCHITECT.

Project Title : ATASCADERO LIBRARY RENOVATION
6555 CAPISTRANO AVE
ATASCADERO CA 93422

Sheet Title : RESTROOM FINISH PLAN AND SCHEDULE
FIRST STORY

Sheet Number
A6.2
of Sheets

PROJECT No. 417

FILE No.

BIDDING ADDENDUM #2 1-10-13

BID SET 03-26-13
BID SET 03-26-13

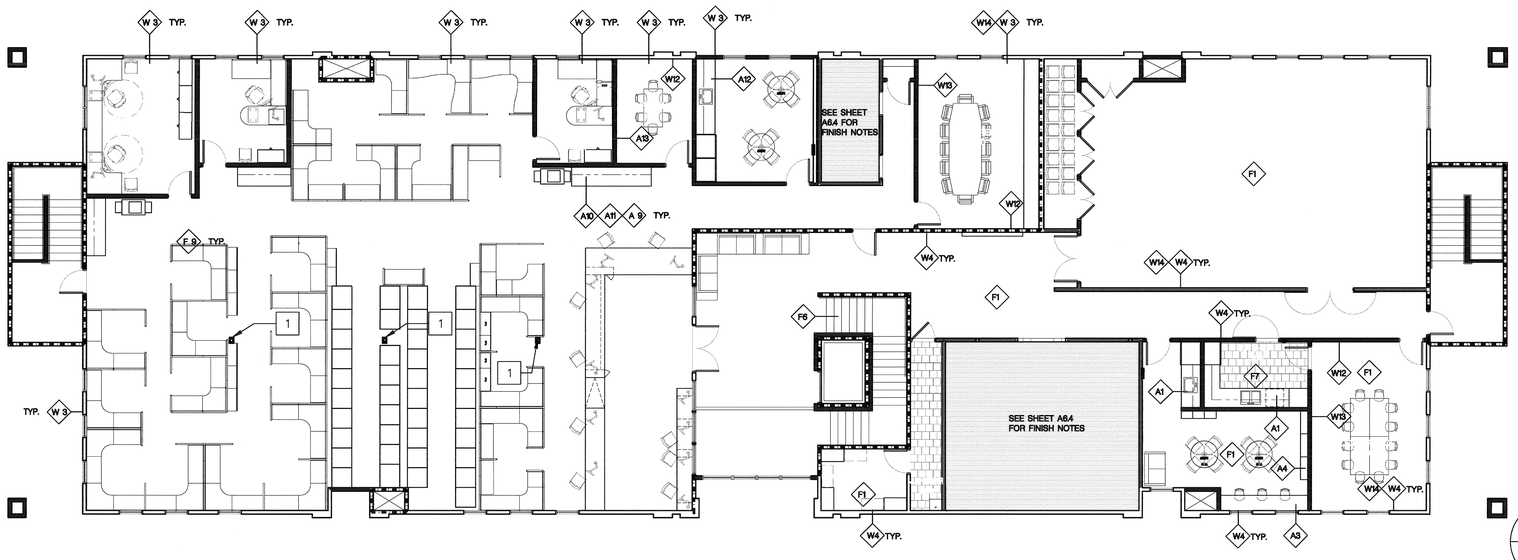

0 4' 8' 16'

SCALE: 1/8" = 1'-0"

1 FINISH PLAN, SECOND STORY

1. PAINT COLUMN SHAFT, RUSKIN ROOM GREEN, SW0042, SEE DETAIL 14/A8.3

23 KEY NOTES

- WALL AND CEILING MATERIALS SHALL NOT EXCEED THE FLAME SPREAD CLASSIFICATION IN CBC TABLE 803.5
- IF CARPET OR CARPET TILE IS USED ON A GROUND OR FLOOR SURFACE, IT SHALL BE SECURELY ATTACHED; HAVE A FIRM CUSHION, PAD OR BACKING OR NO CUSHION OR PAD; AND HAVE A LEVEL LOOP, TEXTURED LOOP, LEVEL CUT PILE, OR LEVEL CUT/UNCUT PILE TEXTURE. THE MAXIMUM PILE HEIGHT SHALL BE ½". EXPOSED EDGES OF CARPET SHALL BE FASTENED TO FLOOR SURFACES AND HAVE TRIM ALONG THE ENTIRE LENGTH OF THE EXPOSED EDGE. CARPET EDGE TRIM SHALL COMPLY WITH SECTION 1124B.2. [1124B.3 CBC]
- INTERIOR SURFACES. IN OTHER THAN DWELLING UNITS, TOILET ROOMS FLOORS SHALL HAVE A SMOOTH, HARD NONABSORBENT SURFACE SUCH AS PORTLAND CEMENT, CONCRETE, CERAMIC TILE OR OTHER APPROVED MATERIAL WHICH EXTENDS UPWARD ONTO THE WALLS AT LEAST 5 INCHES. WALLS WITHIN WATER CLOSET COMPARTMENTS AND WALLS WITHIN 24 INCHES OF THE FRONT AND SIDES OF URINALS SHALL BE SIMILARLY FINISHED TO A HEIGHT OF 48 INCHES AND, EXCEPT FOR STRUCTURAL ELEMENTS; THE MATERIALS USED IN SUCH WALLS SHALL BE A TYPE WHICH IS NOT ADVERSELY AFFECTED BY MOISTURE. [1115B.3.2.5 CBC]

24 GENERAL NOTES

WALL FINISHES	
W 3	TYPE: WALL COLOR COLOR: BENJAMIN MOORE, AFFINITY, ETIQUETTE AF-50
W 2	TYPE: WALL COLOR, BENJAMIN MOORE COLOR: HAZY SKIES, OC-48
W12	TYPE: KOROSEAL WALL TALKERS COLOR: ERASE RITE, 09 LIGHT GRAY
W13	TYPE: KOROSEAL WALL TALKERS COLOR: TAC WALL, 04 STONE
W14	TYPE: CHAIR RAIL, KOROSEAL BW40 COLOR: MAPLE, RO STAIN, OVERCAST INSERT, ALUM. RETAINER
FLOOR FINISHES	
F 9	TYPE: C&A CARPET COLOR: INFINITY, DAKOTA PLAINS
TRIM	
T 7	TYPE: DOOR TRIM COLOR: BENJAMIN MOORE, AF-660, GRANITE
SURFACES	
A 9	TYPE: VERTICAL LAMINATE SURFACE COLOR: FORMICA, AMBER MAPLE, 7012-58, MATTE FINISH
A10	TYPE: HORIZONTAL SURFACE COLOR: NEVAMAR, ARP SURFACE, CHARCOAL FUSION FN-6-1T
A11	TYPE: VERTICAL SURFACE COLOR: NEVARMAR, ARP SURFACE, UMBER TEMPERA, TM-2-2T
A12	TYPE: SINK SURFACE COLOR: AVONITE, FOUNDATIONS, CASABLANCA, F1-9137

12 FINISH NOTES NCSC

WALL FINISHES	
W 1	TYPE: WALL ACCENT COLOR COLOR: MARTHA STEWART LIVING, SHORTBREAD MSL077
W 2	TYPE: WALL ACCENT COLOR COLOR: BENJAMIN MOORE, AFFINITY, AVAGE AF-420
W 3	TYPE: WALL COLOR COLOR: BENJAMIN MOORE, AFFINITY, ETIQUETTE AF-50
W 4	TYPE: WALL COLOR, BENJAMIN MOORE COLOR: HAZY SKIES, OC-48
W 5	TYPE: MURAL WALL COLOR: AS SELECTED BY COUNTY
W 6	TYPE: CROSSVILLE TILE COLOR: RETRO ACTIVE, 3X12 HORIZ, MAPLE SUGAR
W 7	TYPE: CROSSVILLE TILE COLOR: COLOR BLOX TOO, 12X18 VERT., CHOPSTICKS
W 8	TYPE: MARLITE COLOR: FRP WAINSCOT, S118G ALMOND
W 9	TYPE: SHERWIN WILLIAMS COLOR: SW7009, PEARLY WHITE
W10	TYPE: CROSSVILLE TILE COLOR: RETRO ACTIVE, 3X12 HORIZ., SEA BREEZE
W11	TYPE: CROSSVILLE TILE COLOR: COLOR BLOX TOO, 12X18 VERT., PAJAMA PARTY
W12	TYPE: KOROSEAL WALL TALKERS COLOR: ERASE RITE, 09 LIGHT GRAY
W13	TYPE: KOROSEAL WALL TALKERS COLOR: TAC WALL, 04 STONE
W14	TYPE: CHAIR RAIL, KOROSEAL BW40 COLOR: MAPLE, RO STAIN, OVERCAST INSERT, ALUM. RETAINER
FLOOR FINISHES	
F 1	TYPE: CARPET COLOR COLOR: SHAW CONTRACT GROUP, DIFFUSE 59575, MOVEMENT 75481
F 2	TYPE: CARPET ACCENT COLOR COLOR: SHAW, TRU COLOURS TILE 59368, RUSSET 68665
F 3	TYPE: CARPET ACCENT COLOR COLOR: SHAW, TRU COLOURS TILE 59368, TUMBLEWEED 68145
F 4	TYPE: CARPET ACCENT COLOR COLOR: SHAW, TRU COLOURS TILE 59368, FESCUE 68545
F 5	TYPE: LOBBY ACCENT TILE, CROSSVILLE PORCELAIN STONE TILE COLOR: PLAN, 12X24 RUN, PN01 SAND
F 6	TYPE: LOBBY TILE, CROSSVILLE PORCELAIN STONE TILE COLOR: PLAN, 12X24 RUN, PN03 SMOKE
F 7	TYPE: CROSSVILLE PORCELAIN STONE TILE COLOR: STRUCTURE, 12X12 RUN, AV223 SHALE
F 8	TYPE: CROSSVILLE PORCELAIN STONE TILE COLOR: STRUCTURE, 12X24., AV221 GYPSUM
F 9	TYPE: C&A CARPET COLOR: INFINITY, DAKOTA PLAINS
F10	TYPE: CARPET ACCENT COLOR COLOR: SHAW, TRU COLOURS TILE 59368, SAXONY BLUE 95405
F11	TYPE: CARPET ACCENT COLOR COLOR: SHAW, TRU COLOURS TILE 59368, MARINA 68415
F12	TYPE: CARPET ACCENT COLOR COLOR: SHAW, TRU COLOURS TILE 59368, CITRUS 68201
F13	TYPE: CARPET ACCENT COLOR COLOR: SHAW, TRU COLOURS TILE 59368, BRITE GREEN 68325
F14	TYPE: CONCRETE COLOR: SHERWIN WILLIAMS EPOXY SEALER
TRIM	
T 1	TYPE: COLOR INTEGRATED WALL BASE COLOR: ARMSTRONG, 20 OYSTER
T 2	TYPE: DOOR TRIM COLOR: BENJAMIN MOORE, AFFINITY, FUSION AF-675
T 3	TYPE: CUSTOM BUILDING PRODUCTS, GROUT COLOR: CANVAS
T 4	TYPE: CUSTOM BUILDING PRODUCTS, GROUT COLOR: CANVAS
T 5	TYPE: CUSTOM BUILDING PRODUCTS, GROUT COLOR: CHAPARRAL
T 6	TYPE: CUSTOM BUILDING PRODUCTS, GROUT COLOR: OCEAN BLUE
SURFACES	
A 1	TYPE: HORIZONTAL SOLID SURFACE COLOR: AVONITE SURFACES, FOUNDATIONS, NORDIC F1-9119
A 2	TYPE: HORIZONTAL SOLID SURFACE COLOR: FORMICA, FLAX GAUZE, 7708-58, MATTE COLLECTION
A 3	TYPE: HORIZONTAL SOLID SURFACE COLOR: FORMICA, NEUTRAL WEFT, 5875-58, MATTE COLLECTION
A 4	TYPE: HORIZONTAL AND VERTICAL LAMINATE SURFACE COLOR: FORMICA, GOLD SPECKLE MAPLE, 1531 VL
A 5	TYPE: BOBRICK PARTITION COLOR: DURALINE 1182, S-463, ANTIQUE WHITE
A 6	TYPE: AVONITE SOLID SURFACE LAVATORY COLOR: AZTEC BROWN K3-7700
A 7	TYPE: BOBRICK PARTITION COLOR: DURALINE 1182, S-463, ANTIQUE WHITE
A 8	TYPE: AVONITE SOLID SURFACE LAVATORY COLOR: CIRRUS D3-8603

14 FINISH NOTES LIBRARY

COUNTY OF SAN LUIS OBISPO
DEPARTMENT OF GENERAL SERVICES
1087 SANTA ROSA STREET
SAN LUIS OBISPO, CA 93408
PHONE 8057815200

RA KAYATT/ALBRECHT & ASSOCIATES, INC.
ARCHITECTURE ENGINEERING
ARCHITECTURE INTERIORS
GREG KAYATT, AIA
MECHANICAL ELECTRICAL
JIM ALBRECHT, PE
1077 PACIFIC STREET
SAN LUIS OBISPO, CA 93401
PHONE: (805)781-0300 SLO
(805)528-5520 SM
FAX: (805)786-0702 SLO
(805)528-5519 SM
EMAIL:OFFICE@KAYATT-ALBRECHT.COM

REGISTERED ARCHITECT GREGORY ALLEN BRYANT LIC. NO. C-20808 10/25/13 STATE OF CALIFORNIA

No.	Revision	Date
	PLANCHECK REV1	9.26.12
	PLANCHECK REV2	10.24.12
	PLANCHECK REV3	11.19.12

County Facility:

ATASCADERO LIBRARY RENOVATION

6555 CAPISTRANO AVE.
ATASCADERO CA 93422

Project Manager: M. DEMARTINI
Checked By: MD
Client Approval:
Date: 08/20/2012

CONTRACTOR SHALL VERIFY ALL DIMENSIONS AND EXISTING CONDITIONS PRIOR TO COMMENCING WORK. REPORT ANY DISCREPANCIES TO COUNTY PROJECT COORDINATOR OR TO THE PROJECT ARCHITECT.

Project Title : ATASCADERO LIBRARY RENOVATION
6555 CAPISTRANO AVE
ATASCADERO CA 93422

Sheet Title : FINISH PLAN SECOND STORY

Sheet Number
A6.3
of Sheets

PROJECT No. 417

FILE No.

BIDDING SET 11-19-12

BIDDING SET 11-19-12
BID SET 03-26-13
BID SET 03-26-13
BID SET 03-26-13

BID SET 03-26-13
BID SET 03-26-13

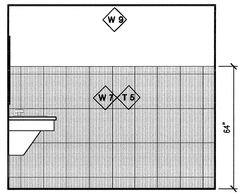

1

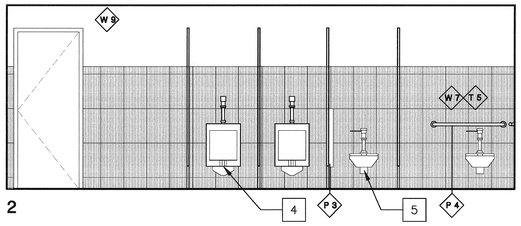

2

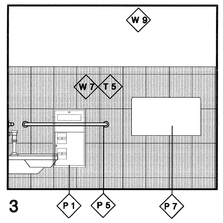

3

51 208 MEN'S RESTROOM

SCALE: 3/8" = 1'-0"

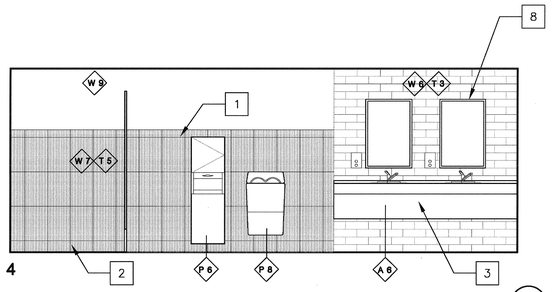

4

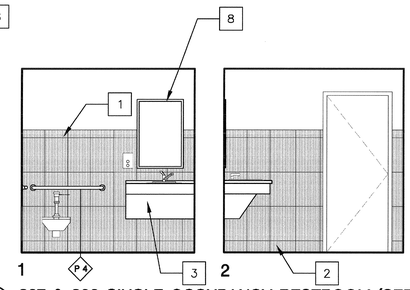

1 2

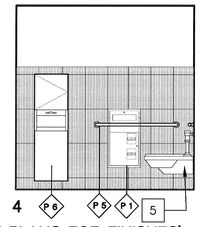

4

21 307 & 308 SINGLE OCCUPANCY RESTROOM (SEE PLANS FOR FINISHES)

SCALE: 3/8" = 1'-0"

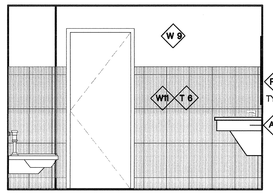

1

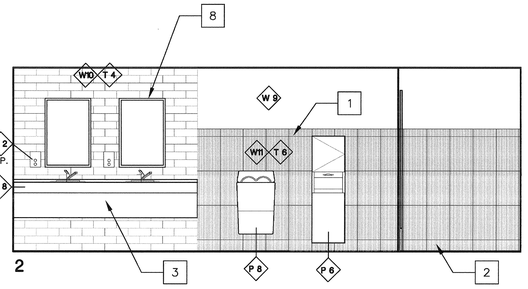

2

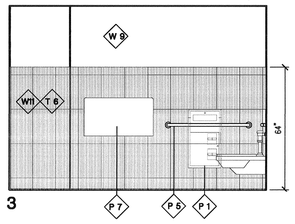

3

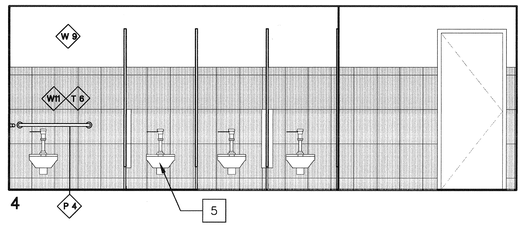

4

52 207 WOMEN'S RESTROOM

SCALE: 3/8" = 1'-0"

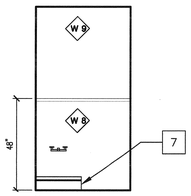

3

53 209 JANITOR'S CLOSET

SCALE: 3/8" = 1'-0"

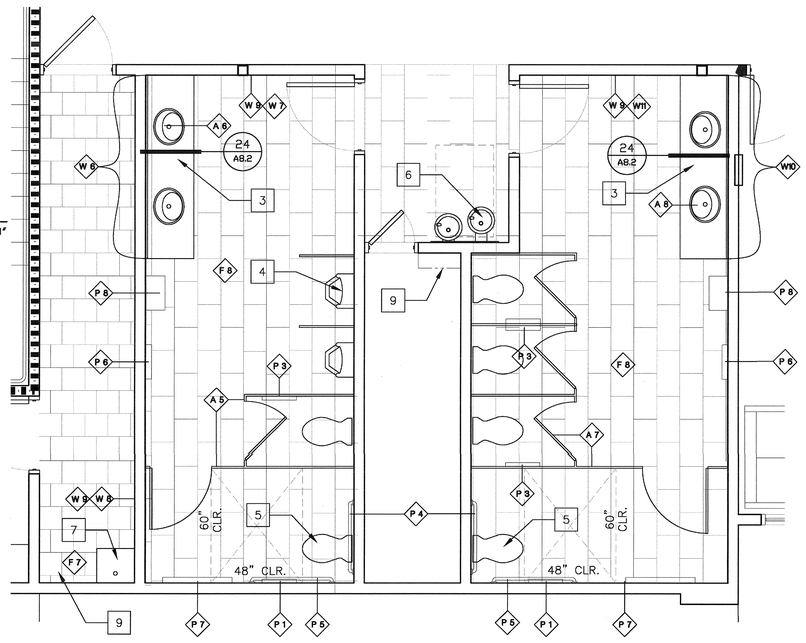

54 SECOND STORY PUBLIC RESTROOMS

SCALE: 3/8" = 1'-0"

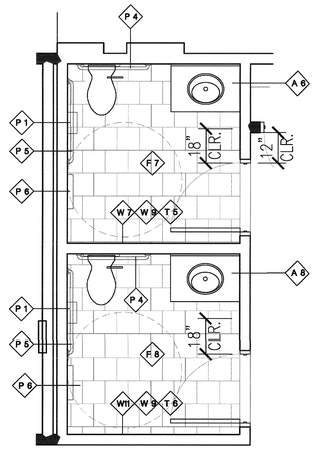

NOTE: SEE 53/T2 FOR SINGLE USE RESTROOM DETAILS

34 SECOND STORY OFFICE RESTROOMS

SCALE: 3/8" = 1'-0"

1. 4 X 12 CERAMIC BULLNOSE TILE.
2. 6 X 12 CERAMIC COVE TILE.
3. ADA ACCESSIBLE LAVATORIES.
4. ADA ACCESSIBLE URINAL. SEE PLUMBING SHEETS
5. ADA ACCESSIBLE TOILET. SEE PLUMBING SHEETS
6. NEW HI-LOW DRINKING FOUNTAIN. SEE PLUMBING SHEETS
7. NEW FLOOR MOUNTED JANITOR'S SINK. SEE PLUMBING SHEETS
8. 24"X30" BEVELED EDGE MIRROR
9. WALL MOUNTED ADJUSTABLE SHELVING. RAKKS E-STANDARD (RECESSED). LAMINATE SHELVES.

12 KEY NOTES

WALL FINISHES		
W 6	TYPE:	CROSSVILLE TILE
	COLOR:	RETRO ACTIVE, 3X12 HORIZ, MAPLE SUGAR
W 7	TYPE:	CROSSVILLE TILE
	COLOR:	COLOR BLOX TOO, 12X18 VERT., CHOPSTICKS
W 8	TYPE:	MARLITE
	COLOR:	FRP WAINSCOT, ARTIZAN 5408
W 9	TYPE:	SHERWIN WILLIAMS
	COLOR:	SW7009, PEARLY WHITE
W10	TYPE:	CROSSVILLE TILE
	COLOR:	RETRO ACTIVE, 3X12 HORIZ., SEA BREEZE
W11	TYPE:	CROSSVILLE TILE
	COLOR:	COLOR BLOX TOO, 12X18 VERT., PAJAMA PARTY
FLOOR FINISHES		
F 7	TYPE:	CROSSVILLE PORCELAIN STONE TILE
	COLOR:	STRUCTURE, 12X12 RUN, AV223 SHALE
F 8	TYPE:	CROSSVILLE PORCELAIN STONE TILE
	COLOR:	STRUCTURE, 12X24., AV221 GYPSUM
TRIM		
T 3	TYPE:	CUSTOM BUILDING PRODUCTS, GROUT
	COLOR:	CANVAS
T 4	TYPE:	CUSTOM BUILDING PRODUCTS, GROUT
	COLOR:	CANVAS
T 5	TYPE:	CUSTOM BUILDING PRODUCTS, GROUT
	COLOR:	CHAPARRAL
T 6	TYPE:	CUSTOM BUILDING PRODUCTS, GROUT
	COLOR:	OCEAN BLUE
SURFACES		
A 5	TYPE:	BOBRICK PARTITION
	COLOR:	DURALINE 1182, S-463, ANTIQUE WHITE
A 6	TYPE:	AVONITE SOLID SURFACE LAVATORY
	COLOR:	AZTEC BROWN K3-7700
A 7	TYPE:	BOBRICK PARTITION
	COLOR:	DURALINE 1182, S-463, ANTIQUE WHITE
A 8	TYPE:	AVONITE SOLID SURFACE LAVATORY
	COLOR:	CIRRUS D3-8603
ACCESSORIES		
P 1	MANU:	BOBRICK UNITIZED SEAT COVER AND TOILET TISSUE DISPENSER, B-3474
	COLOR:	STAINLESS STEEL
P 2	MANU:	SURFACE MOUNT AUTOMATIC SOAP DISPENSER. ASI #20364
	COLOR:	STAINLESS STEEL
P 3	MANU:	BOBRICK UNITIZED SEAT COVER AND TOILET TISSUE DISPENSER, B-3471, PARTITION MOUNT
	COLOR:	STAINLESS STEEL
P 4	MANU:	1-1/2"ø X 36" SURFACE MOUNT GRAB BAR. ASI #3200
	COLOR:	STAINLESS STEEL
P 5	MANU:	1-1/2"ø X 42" SURFACE MOUNT GRAB BAR. ASI #3200
	COLOR:	STAINLESS STEEL
P 6	MANU:	PAPER TOWEL DISPENSER AND WASTE
	COLOR:	STEEL ASI 20469
P 7	MANU:	SURFACE MOUNTED BABY CHANGING STATION. ASI #9013-9
	COLOR:	STAINLESS STEEL
P 8	MANU:	DYSON AIRBLADE. AB02
	COLOR:	ALUMINUM HOUSING

INTERIOR ELEVATION

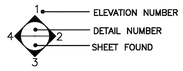

14 FINISH AND ACCESSORY SCHEDULE

COUNTY OF SAN LUIS OBISPO
DEPARTMENT OF GENERAL SERVICES
1087 SANTA ROSA STREET
SAN LUIS OBISPO, CA 93408
PHONE 8057815200

RAVATT ALBRECHT & ASSOCIATES, INC.
ARCHITECTURE INTERIORS
GREG RAVATT, AIA
MECHANICAL ELECTRICAL
JIM ALBRECHT, PE
1215 PACIFIC STREET
SAN LUIS OBISPO CA 93401
PH/TXT: 805/786-0300 (LC)
805/503-5000 (M)
FAX: 805/786-0792 (LC)
805/528-0895 (M)
EMAIL: GREG@RAVATTALBRECHT.COM

REGISTERED ARCHITECT GREGORY ALLEN RAVATT LIC. NO. C-19808 10/24/12 STATE OF CALIFORNIA

No.	Revision	Date
	PLANCHECK REV1	9.26.12
	PLANCHECK REV2	10.24.12
	PLANCHECK REV3	11.19.12

County Facility:

ATASCADERO LIBRARY RENOVATION

6555 CAPISTRANO AVE.
ATASCADERO CA 93422

Project Manager: M. DEMARTINI
Checked By: MD
Client Approval:
Date: 08/20/2012

CONTRACTOR SHALL VERIFY ALL DIMENSIONS AND EXISTING CONDITIONS PRIOR TO COMMENCING WORK. REPORT ANY DISCREPANCIES TO COUNTY PROJECT COORDINATOR OR TO THE PROJECT ARCHITECT.

Project Title : ATASCADERO LIBRARY RENOVATION
6555 CAPISTRANO AVE.
ATASCADERO CA. 93422

Sheet Title : RESTROOM FINISH PLAN AND SCHEDULE
SECOND STORY

Sheet Number
A6.4
of Sheets

PROJECT No. 417

FILE No.

BIDDING SET 11-19-12

BID SET 03-26-13
BID SET 03-26-13
BID SET 03-26-13

BID SET 03-26-13
BID SET 03-26-13

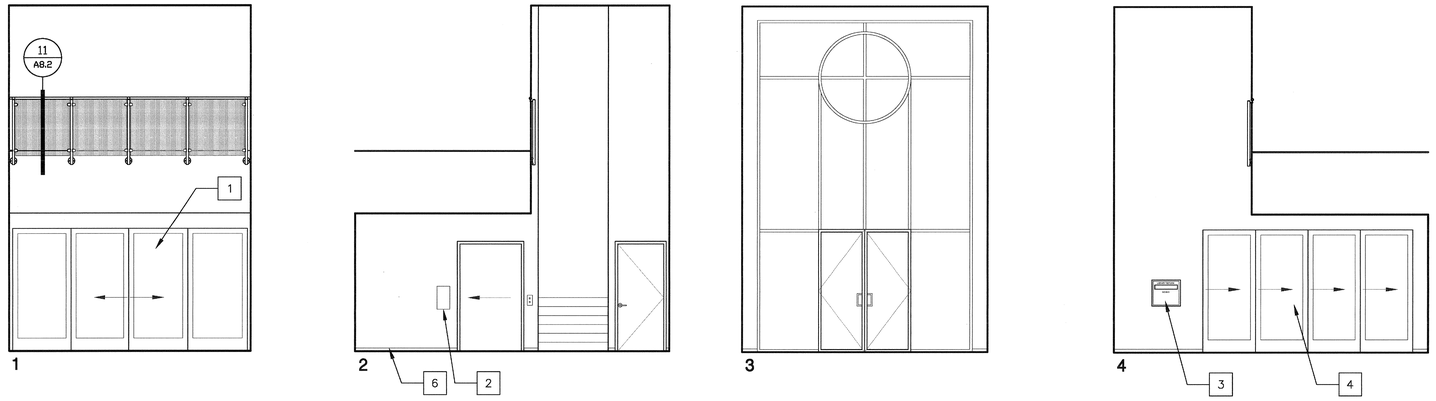

51 100 PUBLIC LOBBY

SCALE: 1/4" = 1'-0"

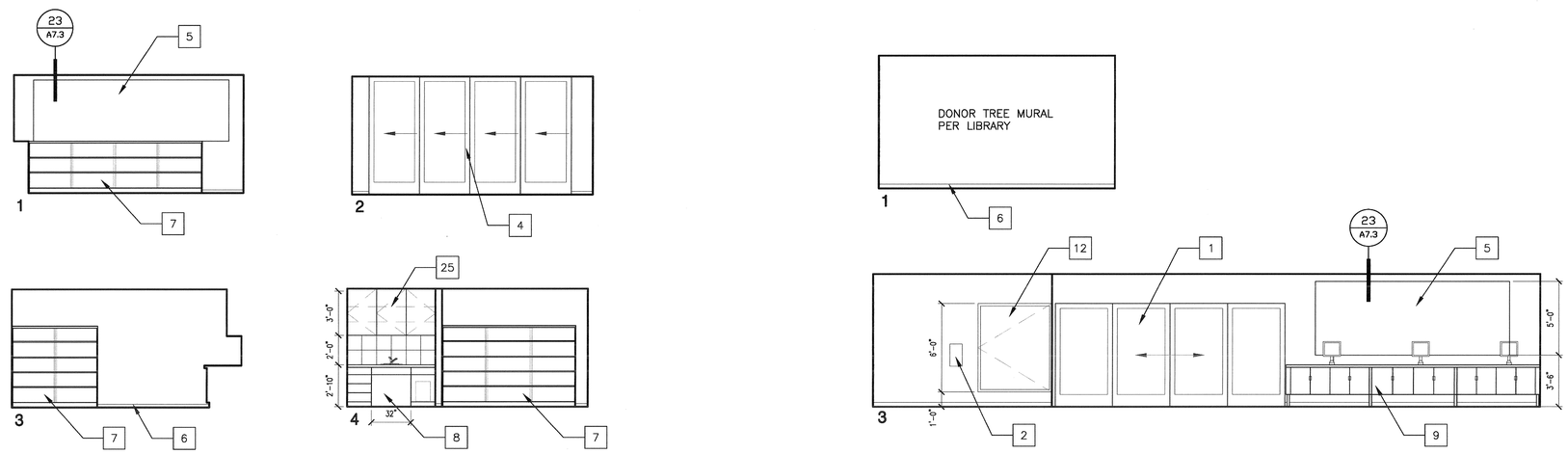

52 101 GIFT SHOP

SCALE: 1/4" = 1'-0"

23 102 LOBBY

SCALE: 1/4" = 1'-0"

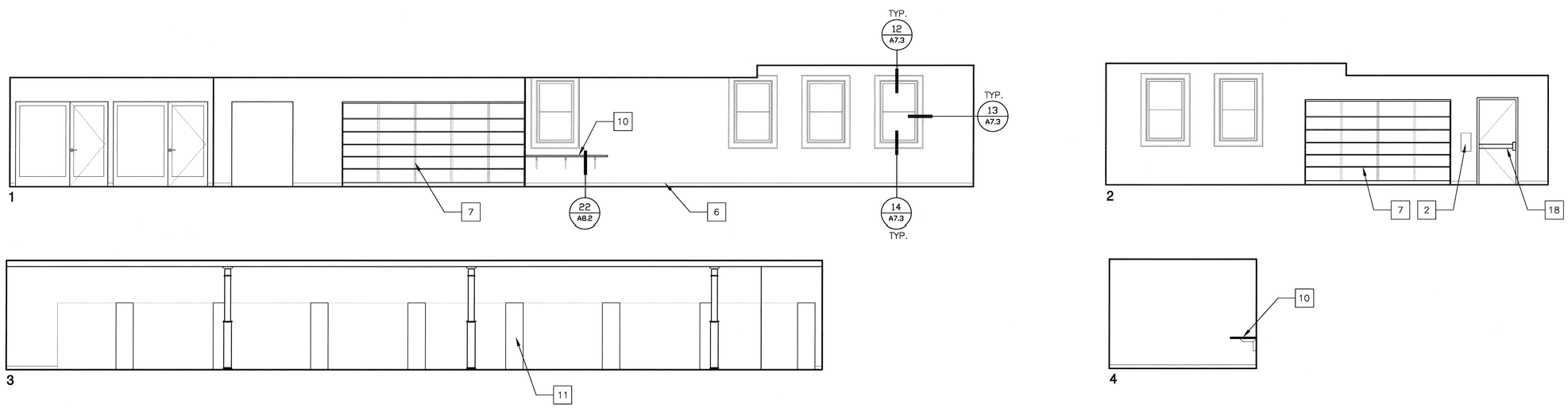

53 103 ADULT FICTION

SCALE: 1/4" = 1'-0"

1. AUTOMATIC SLIDING DOOR PER SCHEDULE
2. FIRE EXTINGUISHER LOCATION
3. BOOK DROP PER FLOOR PLAN
4. ACCORDION DOORS PER SCHEDULE
5. SPANDREL GLASS PER SCHEDULE
6. BASE TRIM PER FINISH PLAN
7. WALL MOUNTED STACKS PER FURNITURE PLAN
8. SINK CABINET AND UPPER STORAGE PER FURNITURE PLAN. PROVIDE 32" OPEN SPACE UNDER SINK TO COMPLY WITH ADA. SEE DETAIL 21/T2
9. SELF CHECK CABINETS PER FURNITURE PLAN
10. WALL MOUNTED WORK SURFACE PER FURNITURE PLAN
11. FREE STANDING STACKS PER FURNITURE PLAN
12. BULLETIN BOARD CABINET PER FURNITURE PLAN
13. GLASS DOOR AND SIDELITE PER SCHEDULE
14. PREFAB STEEL STAIR PER DETAIL 13/A8.2
15. WALL MOUNTED HAND RAIL PER DETAIL13/A8.2
16. RELOCATED WALL MOUNTED STEP LIGHTS LOCATE 18" FROM FF.
17. ARTWALL. SEE REFLECTED CEILING PLAN
18. EXIT DOOR PER SCHEDULE
19. CHAIR RAIL PER FINISH PLAN
20. WALL SCONCE SEE ELECTRICAL
21. PROVIDE FIRE RATED GLASS. SEE SCHEDULE.
22. LOCKERS PER FURNITURE PLAN
23. CUSTOM TRIM AT WINDOW HEAD. SEE DETAIL 33/A7.3.
24. APPLIANCES PER FURNITURE PLAN
25. ADJUSTABLE SHELF LOCATION
26. DRY ERASE WALL PER FINISH PLAN
27. TACKABLE WALL PER FINISH PLAN

INTERIOR ELEVATION

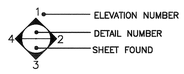

12 KEY NOTES

COUNTY OF SAN LUIS OBISPO
DEPARTMENT OF GENERAL SERVICES
1087 SANTA ROSA STREET
SAN LUIS OBISPO, CA 93408
PHONE 8057815200

RA KAVATT ALBRECHT & ASSOCIATES, INC.
ARCHITECTURE INTERIORS GREG KAVATT, AIA MECHANICAL ELECTRICAL JIM ALBRECHT, PE
1070 PACIFIC STREET SAN LUIS OBISPO CA 93401
PH/TXT: 8055786.698 SLO 8055028.5002 SM
FAX: 8055786.4792 SLO 8055028.5995 SM
EMAIL:GREG@KAVATT-ALBRECHT.COM

REGISTERED ARCHITECT GREGORY ALLEN KAVATT LIC. NO. C-17808 09/30/13 STATE OF CALIFORNIA

No.	Revision	Date
	PLANCHECK REV1	9.26.12
	PLANCHECK REV2	10.24.12
	PLANCHECK REV3	11.19.12

County Facility:

ATASCADERO LIBRARY RENOVATION

6555 CAPISTRANO AVE.
ATASCADERO CA 93422

Project Manager: M. DEMARTINI
Checked By: MD
Client Approval:
Date: 08/20/2012

CONTRACTOR SHALL VERIFY ALL DIMENSIONS AND EXISTING CONDITIONS PRIOR TO COMMENCING WORK. REPORT ANY DISCREPANCIES TO COUNTY PROJECT COORDINATOR OR TO THE PROJECT ARCHITECT.

Project Title : ATASCADERO LIBRARY RENOVATION
6555 CAPISTRANO AVE. ATASCADERO CA 93422

Sheet Title : INTERIOR ELEVATION FIRST STORY

Sheet Number
A6.5
of Sheets

PROJECT No. 417

FILE No.

BIDDING SET 11-19-12

BID SET 03-26-13
BIDDING SET 11-19-12
BID SET 03-26-13

BID SET 03-26-13
BID SET 03-26-13

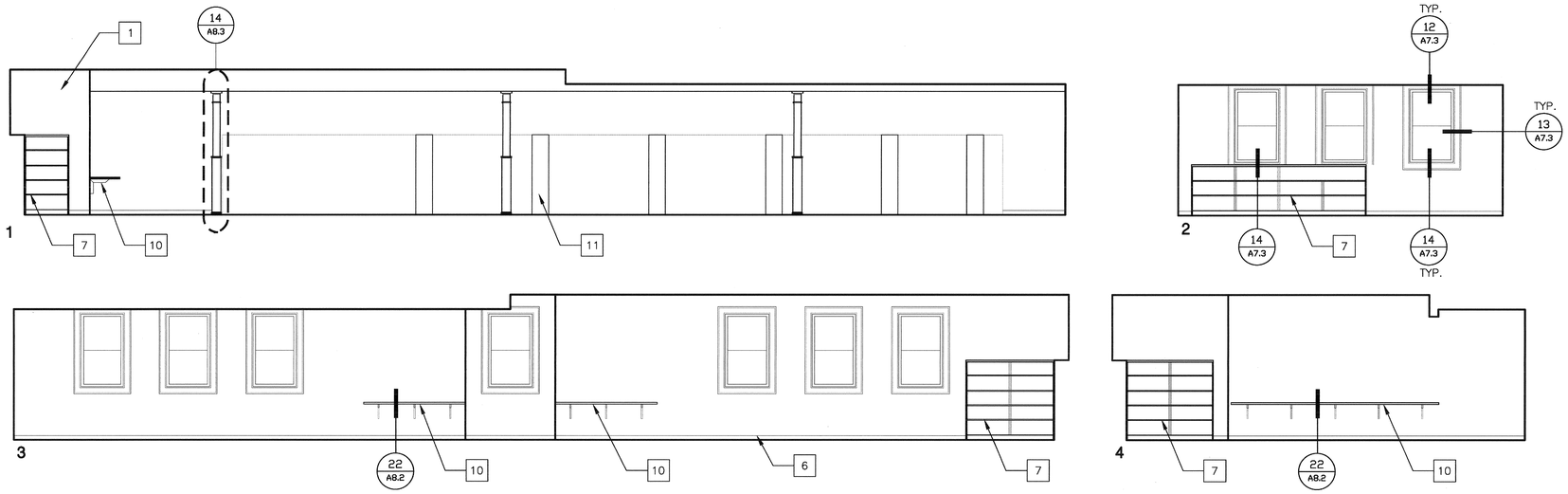

51 105 TEEN

SCALE: 1/4" = 1'-0"

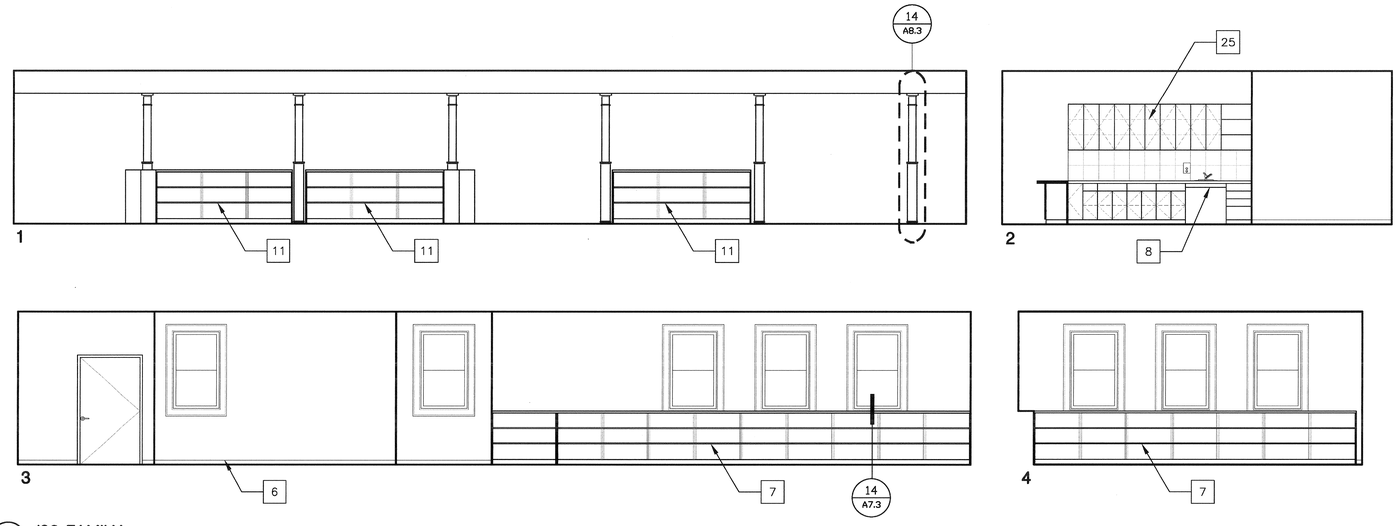

52 106 FAMILY

SCALE: 1/4" = 1'-0"

1. AUTOMATIC SLIDING DOOR PER SCHEDULE
2. FIRE EXTINGUISHER LOCATION
3. BOOK DROP PER FLOOR PLAN
4. ACCORDION DOORS PER SCHEDULE
5. SPANDREL GLASS PER SCHEDULE
6. BASE TRIM PER FINISH PLAN
7. WALL MOUNTED STACKS PER FURNITURE PLAN
8. SINK CABINET AND UPPER STORAGE PER FURNITURE PLAN. PROVIDE 32" OPEN SPACE UNDER SINK TO COMPLY WITH ADA. SEE DETAIL 21/T2
9. SELF CHECK CABINETS PER FURNITURE PLAN
10. WALL MOUNTED WORK SURFACE PER FURNITURE PLAN
11. FREE STANDING STACKS PER FURNITURE PLAN
12. BULLETIN BOARD CABINET PER FURNITURE PLAN
13. GLASS DOOR AND SIDELITE PER SCHEDULE
14. PREFAB STEEL STAIR PER DETAIL 13/A8.2
15. WALL MOUNTED HAND RAIL PER DETAIL13/A8.2
16. RELOCATED WALL MOUNTED STEP L.IGHTS LOCATE 18" FROM FF.
17. ARTWALL. SEE REFLECTED CEILING PLAN
18. EXIT DOOR PER SCHEDULE
19. CHAIR RAIL PER FINISH PLAN
20. WALL SCONCE SEE ELECTRICAL
21. PROVIDE FIRE RATED GLASS. SEE SCHEDULE.
22. LOCKERS PER FURNITURE PLAN
23. CUSTOM TRIM AT WINDOW HEAD. SEE DETAIL 33/A7.3.
24. APPLIANCES PER FURNITURE PLAN
25. ADJUSTABLE SHELF LOCATION
26. DRY ERASE WALL PER FINISH PLAN
27. TACKABLE WALL PER FINISH PLAN

INTERIOR ELEVATION

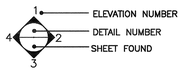

12 KEY NOTES

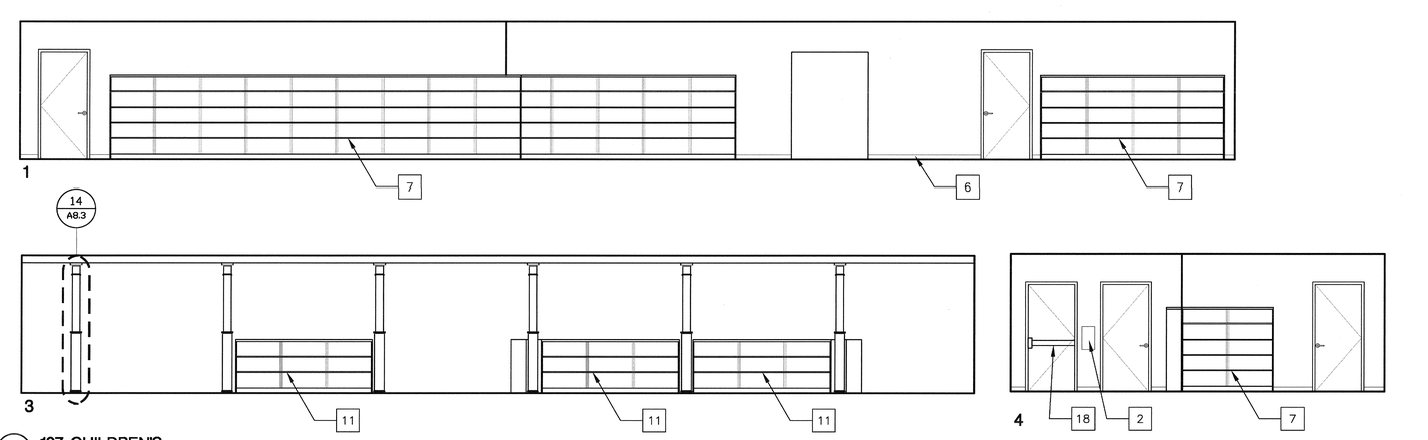

53 107 CHILDREN'S

SCALE: 1/4" = 1'-0"

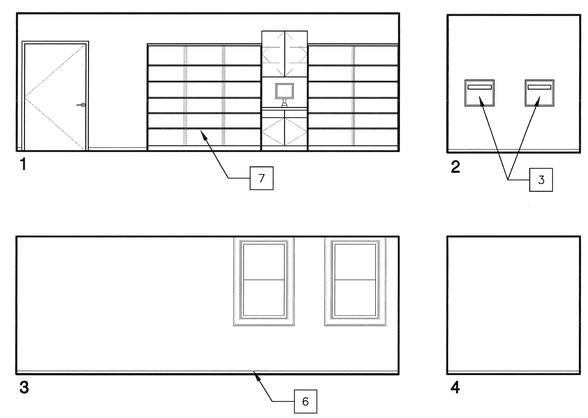

23 108 SORTING

SCALE: 1/4" = 1'-0"

COUNTY OF SAN LUIS OBISPO DEPARTMENT OF GENERAL SERVICES
1087 SANTA ROSA STREET
SAN LUIS OBISPO, CA 93408
PHONE 8057815200

RAYATT ALBRECHT & ASSOCIATES, INC. ARCHITECTURE ENGINEERING
ARCHITECTURE INTERIORS CIVIL/LANDSCAPE MA MECHANICAL ELECTRICAL JIM ALBRECHT, PE
1570 PACIFIC STREET SAN LUIS OBISPO CA 93401
PH.2 NO. 8057861858 SLO 8059283002 SM
FAX: 8057861570 SLO 8059282895 SM
EMAIL:INFO@RAYATTALBRECHT.COM

REGISTERED ARCHITECT GREGORY ALLEN RAYATT LIC. NO. C-20808 09/28/13 STATE OF CALIFORNIA

No.	Revision	Date
	PLANCHECK REV1	9.26.12
	PLANCHECK REV2	10.24.12
	PLANCHECK REV3	11.19.12

County Facility:

ATASCADERO LIBRARY RENOVATION

6555 CAPISTRANO AVE.
ATASCADERO CA 93422

Project Manager: M. DEMARTINI
Checked By: MD
Client Approval:
Date: 08/20/2012

CONTRACTOR SHALL VERIFY ALL DIMENSIONS AND EXISTING CONDITIONS PRIOR TO COMMENCING WORK. REPORT ANY DISCREPANCIES TO COUNTY PROJECT COORDINATOR OR TO THE PROJECT ARCHITECT.

Project Title : ATASCADERO LIBRARY RENOVATION
6555 CAPISTRANO AVE
ATASCADERO CA 93422

Sheet Title : INTERIOR ELEVATION FIRST STORY

Sheet Number
A6.6
of Sheets

PROJECT No. 417

FILE No.

BIDDING SET 11-19-12

BIDDING SET 11-19-12
BID SET 03-26-13
BID SET 03-26-13
BID SET 03-26-13

BID SET 03-26-13
BID SET 03-26-13

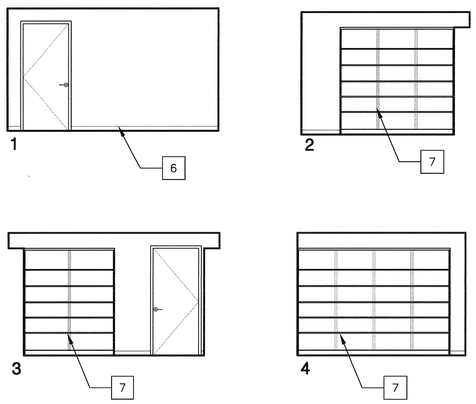

51 109 FRIENDS

SCALE: 1/4" = 1'-0"

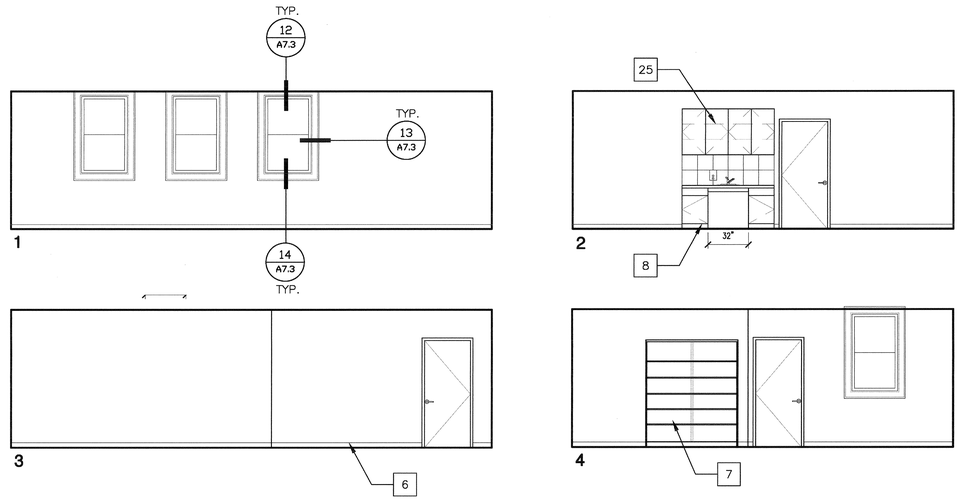

41 110 WORK

SCALE: 1/4" = 1'-0"

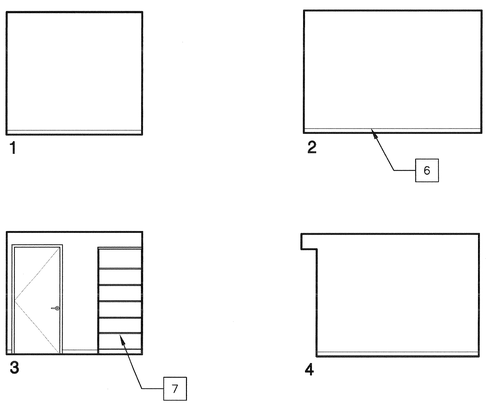

52 113 OFFICE

SCALE: 1/4" = 1'-0"

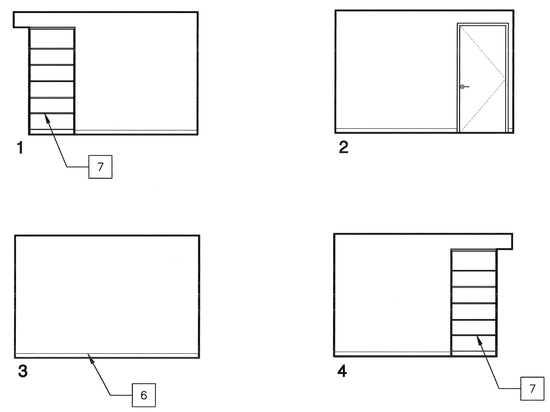

32 114 OFFICE

SCALE: 1/4" = 1'-0"

1. AUTOMATIC SLIDING DOOR PER SCHEDULE
2. FIRE EXTINGUISHER LOCATION
3. BOOK DROP PER FLOOR PLAN
4. ACCORDION DOORS PER SCHEDULE
5. SPANDREL GLASS PER SCHEDULE
6. BASE TRIM PER FINISH PLAN
7. WALL MOUNTED STACKS PER FURNITURE PLAN
8. SINK CABINET AND UPPER STORAGE PER FURNITURE PLAN. PROVIDE 32" OPEN SPACE UNDER SINK TO COMPLY WITH ADA. SEE DETAIL 21/T2
9. SELF CHECK CABINETS PER FURNITURE PLAN
10. WALL MOUNTED WORK SURFACE PER FURNITURE PLAN
11. FREE STANDING STACKS PER FURNITURE PLAN
12. BULLETIN BOARD CABINET PER FURNITURE PLAN
13. GLASS DOOR AND SIDELITE PER SCHEDULE
14. PREFAB STEEL STAIR PER DETAIL 13/A8.2
15. WALL MOUNTED HAND RAIL PER DETAIL13/A8.2
16. RELOCATED WALL MOUNTED STEP L.IGHTS LOCATE 18" FROM FF.
17. ARTWALL. SEE REFLECTED CEILING PLAN
18. EXIT DOOR PER SCHEDULE
19. CHAIR RAIL PER FINISH PLAN
20. WALL SCONCE SEE ELECTRICAL
21. PROVIDE FIRE RATED GLASS. SEE SCHEDULE.
22. LOCKERS PER FURNITURE PLAN
23. CUSTOM TRIM AT WINDOW HEAD. SEE DETAIL 33/A7.3.
24. APPLIANCES PER FURNITURE PLAN
25. ADJUSTABLE SHELF LOCATION
26. DRY ERASE WALL PER FINISH PLAN
27. TACKABLE WALL PER FINISH PLAN

INTERIOR ELEVATION

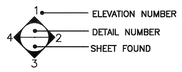

12 KEY NOTES

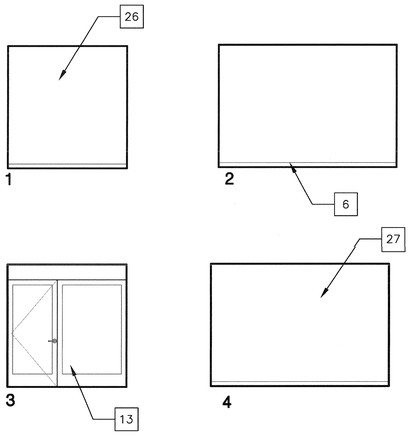

43 116/117 GROUP STUDY

SCALE: 1/4" = 1'-0"

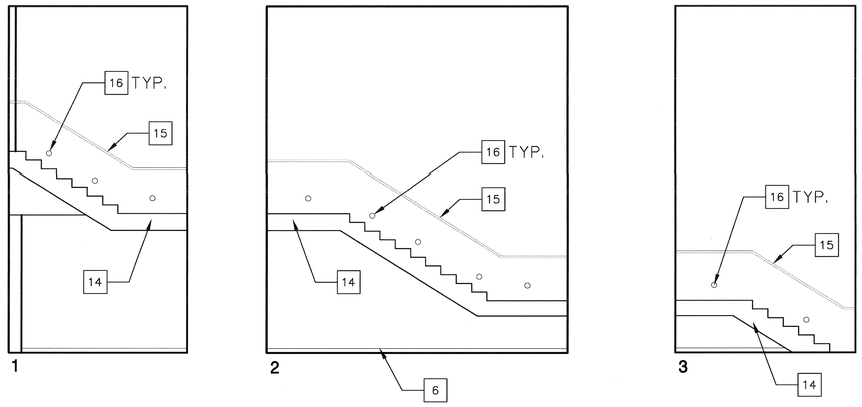

33 121 STAIRS

SCALE: 1/4" = 1'-0"

COUNTY OF SAN LUIS OBISPO
DEPARTMENT OF GENERAL SERVICES
1087 SANTA ROSA STREET
SAN LUIS OBISPO, CA 93408
PHONE 805.781.5200

RA
KAVATT ALBRECHT & ASSOCIATES, INC.
ARCHITECTURE ENGINEERING
ARCHITECTURE INTERIORS
GREG KAVATT, AIA
MECHANICAL ELECTRICAL
JIM ALBRECHT, PE
1070 PACIFIC STREET
SAN LUIS OBISPO, CA 93401
PH/TXT: 805.786.4300 ECT.
805.928.5002 SM.
FAX: 805.786.4792 ECT.
805.928.2895 SM.
EMAIL: OFFICE@KAVATT-ALBRECHT.COM

REGISTERED ARCHITECT
GREGORY ALLEN KAVATT
LIC. NO. C-20808
08/30/13
STATE OF CALIFORNIA

No.	Revision	Date
	PLANCHECK REV1	9.26.12
	PLANCHECK REV2	10.24.12
	PLANCHECK REV3	11.19.12

County Facility:

ATASCADERO LIBRARY RENOVATION

6555 CAPISTRANO AVE.
ATASCADERO CA 93422

Project Manager: M. DEMARTINI
Checked By: MD
Client Approval:
Date: 08/20/2012

CONTRACTOR SHALL VERIFY ALL DIMENSIONS AND EXISTING CONDITIONS PRIOR TO COMMENCING WORK. REPORT ANY DISCREPANCIES TO COUNTY PROJECT COORDINATOR OR TO THE PROJECT ARCHITECT.

Project Title : ATASCADERO LIBRARY RENOVATION
6555 CAPISTRANO AVE
ATASCADERO CA 93422

Sheet Title : INTERIOR ELEVATION FIRST STORY

Sheet Number
A6.7
of Sheets

PROJECT No. 417

FILE No.

BIDDING SET 11-19-12

BIDDING SET 11-19-12
BID SET 03-26-13
BID SET 03-26-13
BID SET 03-26-13

BID SET 03-26-13
BID SET 03-26-13

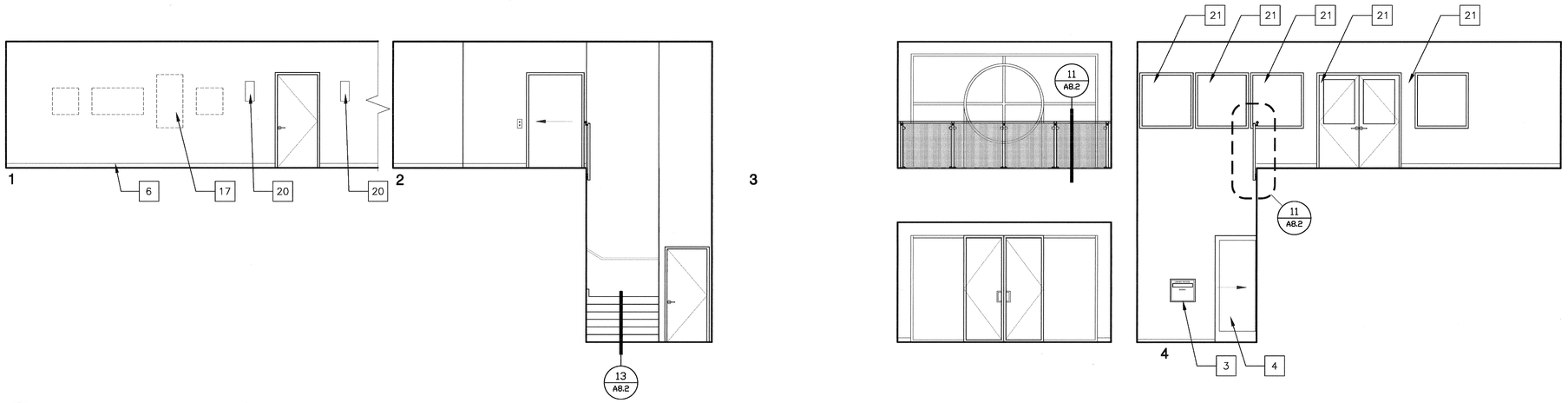

51 200 PUBLIC LOBBY

SCALE: 1/4" = 1'-0"

1. AUTOMATIC SLIDING DOOR PER SCHEDULE
2. FIRE EXTINGUISHER LOCATION
3. BOOK DROP PER FLOOR PLAN
4. ACCORDION DOORS PER SCHEDULE
5. SPANDREL GLASS PER SCHEDULE
6. BASE TRIM PER FINISH PLAN
7. WALL MOUNTED STACKS PER FURNITURE PLAN
8. SINK CABINET AND UPPER STORAGE PER FURNITURE PLAN. PROVIDE 32" OPEN SPACE UNDER SINK TO COMPLY WITH ADA. SEE DETAIL 21/T2
9. SELF CHECK CABINETS PER FURNITURE PLAN
10. WALL MOUNTED WORK SURFACE PER FURNITURE PLAN
11. FREE STANDING STACKS PER FURNITURE PLAN
12. BULLETIN BOARD CABINET PER FURNITURE PLAN
13. GLASS DOOR AND SIDELITE PER SCHEDULE
14. PREFAB STEEL STAIR PER DETAIL 13/A8.2
15. WALL MOUNTED HAND RAIL PER DETAIL13/A8.2
16. RELOCATED WALL MOUNTED STEP LIGHTS LOCATE 18" FROM FF.
17. ARTWALL. SEE REFLECTED CEILING PLAN
18. EXIT DOOR PER SCHEDULE
19. CHAIR RAIL PER FINISH PLAN
20. WALL SCONCE SEE ELECTRICAL
21. PROVIDE FIRE RATED GLASS. SEE SCHEDULE.
22. LOCKERS PER FURNITURE PLAN
23. CUSTOM TRIM AT WINDOW HEAD. SEE DETAIL 33/A7.3.
24. APPLIANCES PER FURNITURE PLAN
25. ADJUSTABLE SHELF LOCATION
26. DRY ERASE WALL PER FINISH PLAN
27. TACKABLE WALL PER FINISH PLAN

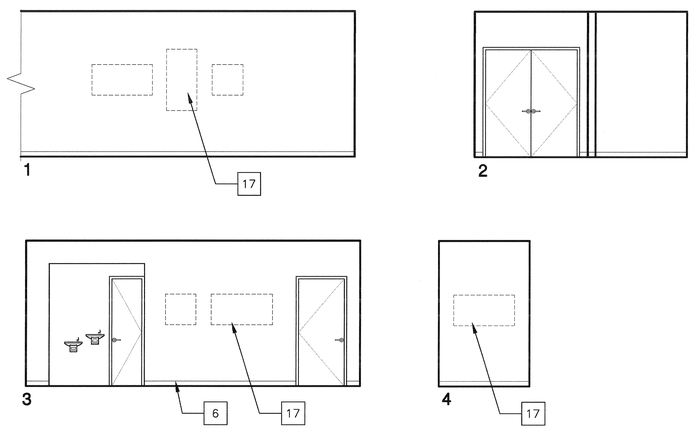

52 201 COMMUNITY LOBBY

SCALE: 1/4" = 1'-0"

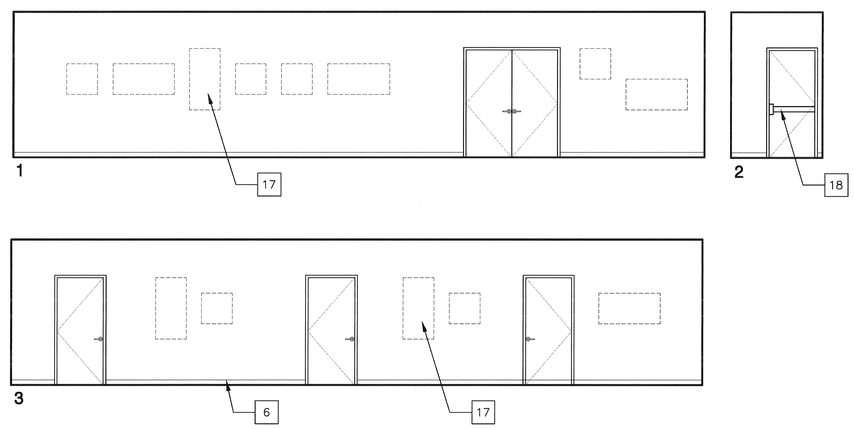

32 202 HALL

SCALE: 1/4" = 1'-0"

INTERIOR ELEVATION

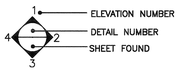

12 KEY NOTES

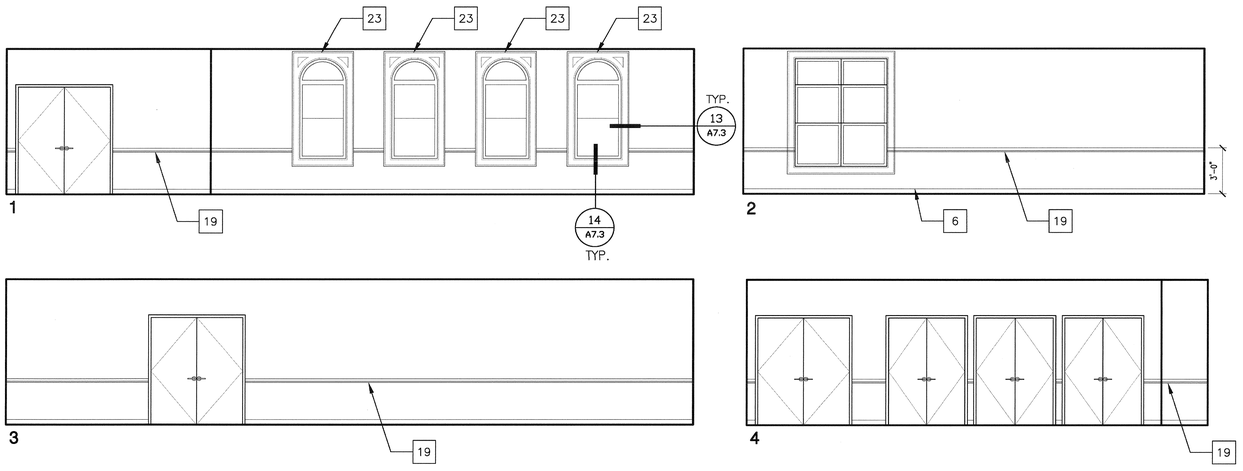

53 203 COMMUNITY ROOM

SCALE: 1/4" = 1'-0"

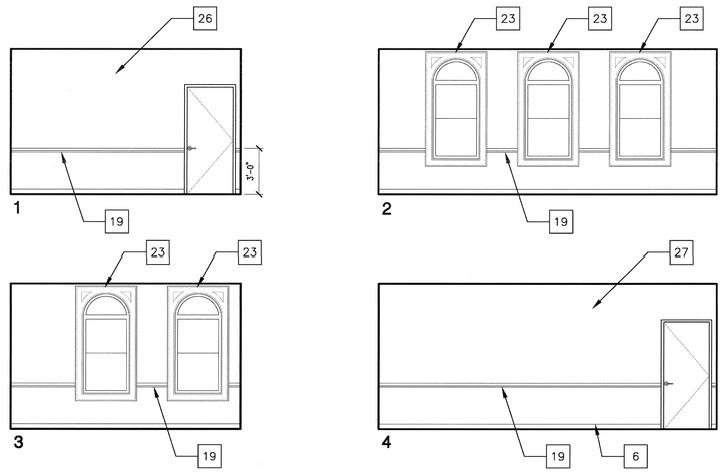

23 204 CONFERENCE

SCALE: 1/4" = 1'-0"

COUNTY OF SAN LUIS OBISPO
DEPARTMENT OF GENERAL SERVICES
1087 SANTA ROSA STREET
SAN LUIS OBISPO, CA 93408
PHONE 8057812200

RAVATT ALBRECHT & ASSOCIATES, INC.
ARCHITECTURE INTERIORS
GREG RAVATT, AIA
MECHANICAL, ELECTRICAL
JIM ALBRECHT, PE
1120 PACIFIC STREET
SAN LUIS OBISPO, CA 93401
PH/TXT: 805.786.4300 SLO
805.928.5002 SM
FAX: 805.786.4792 SLO
805.928.2895 SM
E-MAIL: OFFICE@RAVATT-ALBRECHT.COM

REGISTERED ARCHITECT
GREGORY ALLEN RAVATT
LIC. NO. C-18805
STATE OF CALIFORNIA

No.	Revision	Date
1	PLANCHECK REV1	9.26.12
	PLANCHECK REV2	10.24.12
	PLANCHECK REV3	11.19.12

County Facility:

ATASCADERO LIBRARY RENOVATION

6555 CAPISTRANO AVE.
ATASCADERO CA 93422

Project Manager: M. DEMARTINI
Checked By: MD
Client Approval:
Date: 08/20/2012

CONTRACTOR SHALL VERIFY ALL DIMENSIONS AND EXISTING CONDITIONS PRIOR TO COMMENCING WORK. REPORT ANY DISCREPANCIES TO COUNTY PROJECT COORDINATOR OR TO THE PROJECT ARCHITECT.

Project Title: ATASCADERO LIBRARY RENOVATION
6555 CAPISTRANO AVE
ATASCADERO CA 93422

Sheet Title: INTERIOR ELEVATION
SECOND STORY
COMMUNITY

Sheet Number
A6.8
of Sheets

PROJECT No. 417

FILE No.

BIDDING SET 11-19-12

BIDDING SET 11-19-12
BID SET 03-26-13
BID SET 03-26-13
BID SET 03-26-13

BID SET 03-26-13
BID SET 03-26-13

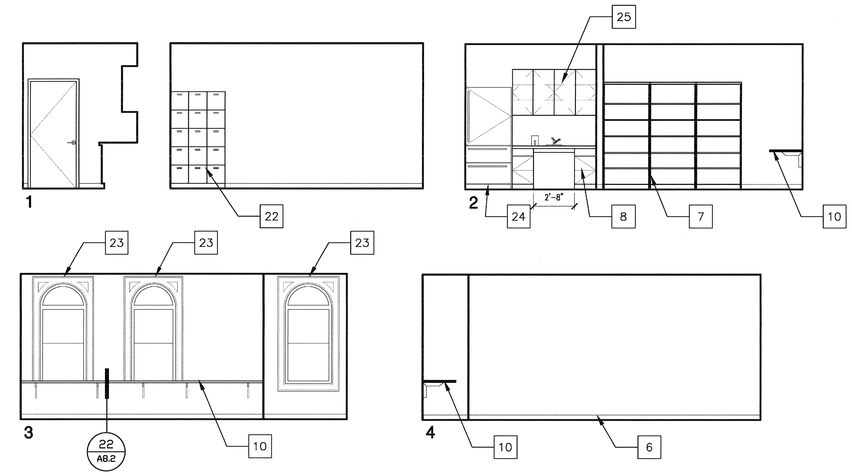

51 205 LOUNGE

SCALE: 1/4" = 1'-0"

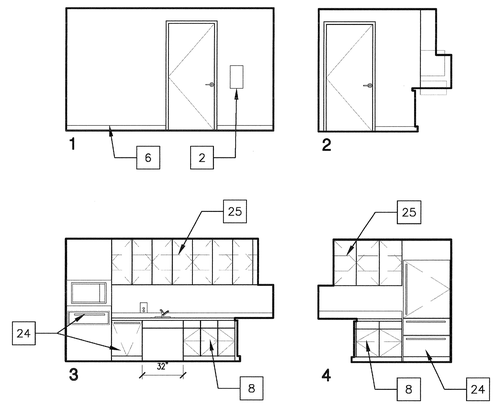

31 206 KITCHENETTE

SCALE: 1/4" = 1'-0"

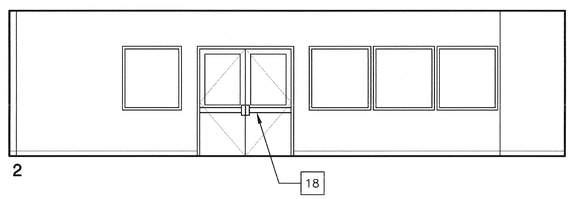

52 300 NCSC LOBBY

SCALE: 1/4" = 1'-0"

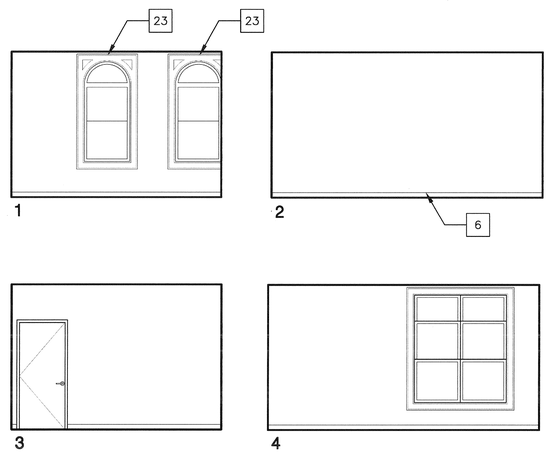

42 302 ASSESSORS OFFICE

SCALE: 1/4" = 1'-0"

1. AUTOMATIC SLIDING DOOR PER SCHEDULE
2. FIRE EXTINGUISHER LOCATION
3. BOOK DROP PER FLOOR PLAN
4. ACCORDION DOORS PER SCHEDULE
5. SPANDREL GLASS PER SCHEDULE
6. BASE TRIM PER FINISH PLAN
7. WALL MOUNTED STACKS PER FURNITURE PLAN
8. SINK CABINET AND UPPER STORAGE PER FURNITURE PLAN. PROVIDE 32" OPEN SPACE UNDER SINK TO COMPLY WITH ADA. SEE DETAIL 21/T2
9. SELF CHECK CABINETS PER FURNITURE PLAN
10. WALL MOUNTED WORK SURFACE PER FURNITURE PLAN
11. FREE STANDING STACKS PER FURNITURE PLAN
12. BULLETIN BOARD CABINET PER FURNITURE PLAN
13. GLASS DOOR AND SIDELITE PER SCHEDULE
14. PREFAB STEEL STAIR PER DETAIL 13/A8.2
15. WALL MOUNTED HAND RAIL PER DETAIL13/A8.2
16. RELOCATED WALL MOUNTED STEP L.IGHTS LOCATE 18" FROM FF.
17. ARTWALL. SEE REFLECTED CEILING PLAN
18. EXIT DOOR PER SCHEDULE
19. CHAIR RAIL PER FINISH PLAN
20. WALL SCONCE SEE ELECTRICAL
21. PROVIDE FIRE RATED GLASS. SEE SCHEDULE.
22. LOCKERS PER FURNITURE PLAN
23. CUSTOM TRIM AT WINDOW HEAD. SEE DETAIL 33/A7.3.
24. APPLIANCES PER FURNITURE PLAN
25. ADJUSTABLE SHELF LOCATION
26. DRY ERASE WALL PER FINISH PLAN
27. TACKABLE WALL PER FINISH PLAN

INTERIOR ELEVATION

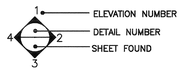

12 KEY NOTES

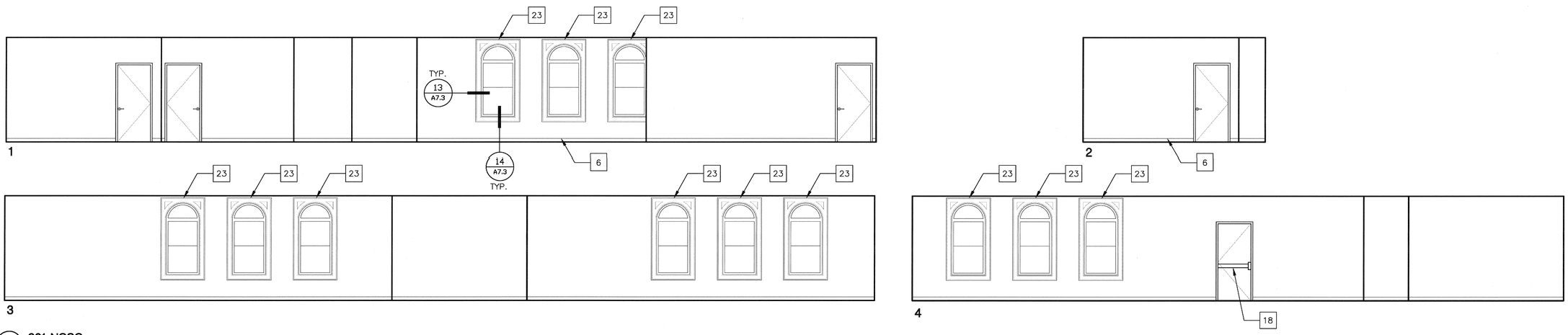

53 301 NCSC

SCALE: 1/4" = 1'-0"

COUNTY OF SAN LUIS OBISPO
DEPARTMENT OF GENERAL SERVICES
1087 SANTA ROSA STREET
SAN LUIS OBISPO, CA 93408
PHONE 805.781.5200

ARCHITECTURE INTERIORS
GREG KAVATT, AIA
MECHANICAL ELECTRICAL
JIM ALBRECHT, PE
1119 PACIFIC STREET
SAN LUIS OBISPO CA 93401
PH/TEL: 805.786.4300 SLO
805.928.5002 SM
FAX: 805.786.4302 SLO
805.928.0995 SM
E-MAIL: INFO@KAVATT-ALBRECHT.COM
KAVATT ALBRECHT & ASSOCIATES, INC.
ARCHITECTURAL ENGINEERING

REGISTERED ARCHITECT
GREGORY ALLEN KAVATT
LIC. NO. C-26608
09/28/12
STATE OF CALIFORNIA

No.	Revision	Date
	PLANCHECK REV1	9.26.12
	PLANCHECK REV2	10.24.12
	PLANCHECK REV3	11.19.12

County Facility:

ATASCADERO LIBRARY RENOVATION

6555 CAPISTRANO AVE.
ATASCADERO CA 93422

Project Manager: M. DEMARTINI
Checked By: MD
Client Approval:
Date: 08/20/2012

CONTRACTOR SHALL VERIFY ALL DIMENSIONS AND EXISTING CONDITIONS PRIOR TO COMMENCING WORK. REPORT ANY DISCREPANCIES TO COUNTY PROJECT COORDINATOR OR TO THE PROJECT ARCHITECT.

Project Title : ATASCADERO LIBRARY RENOVATION
6555 CAPISTRANO AVE
ATASCADERO CA 93422

Sheet Title : INTERIOR ELEVATION
SECOND STORY
COMMUNITY/ONESTOP

Sheet Number
A6.9
of Sheets

PROJECT No. 417

FILE No.

BIDDING SET 11-19-12

BID SET 03-26-13
BIDDING SET 11-19-12
BID SET 03-26-13

BID SET 03-26-13
BID SET 03-26-13

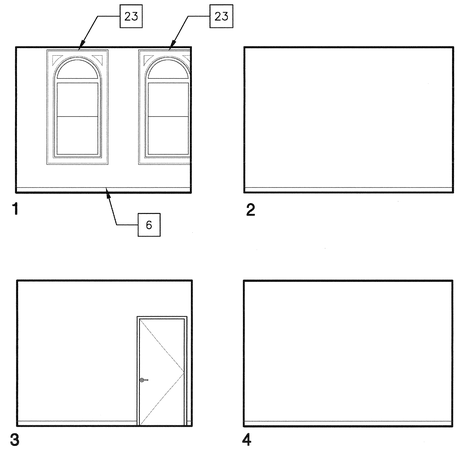

51 303 ASSESSORS OFFICE

SCALE: 1/4" = 1'-0"

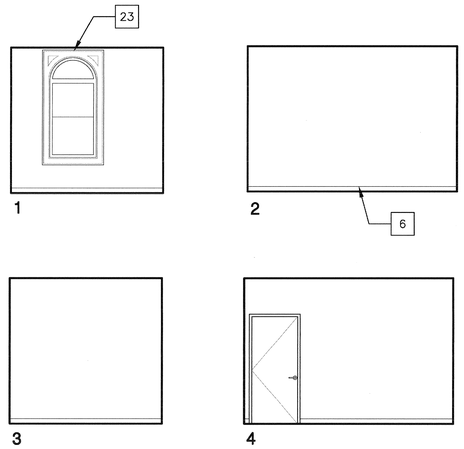

41 304 PLANNING OFFICE

SCALE: 1/4" = 1'-0"

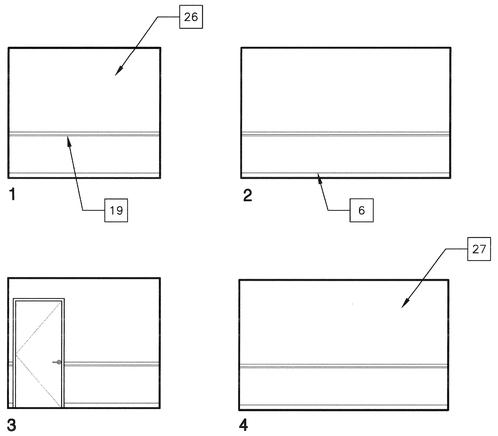

52 305 CONFERENCE

SCALE: 1/4" = 1'-0"

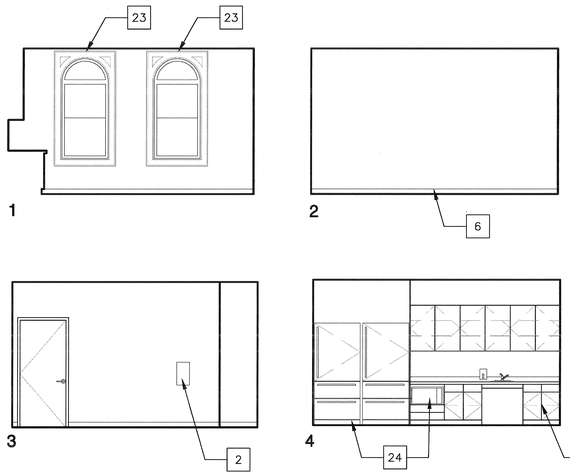

42 306 BREAKROOM

SCALE: 1/4" = 1'-0"

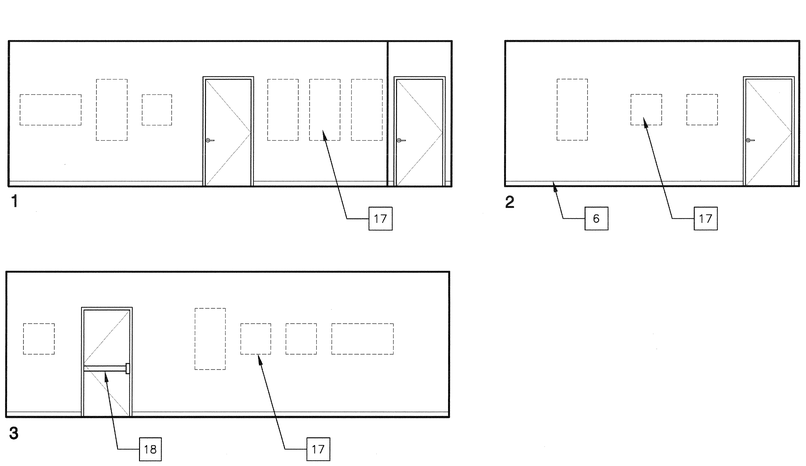

53 309 HALL

SCALE: 1/4" = 1'-0"

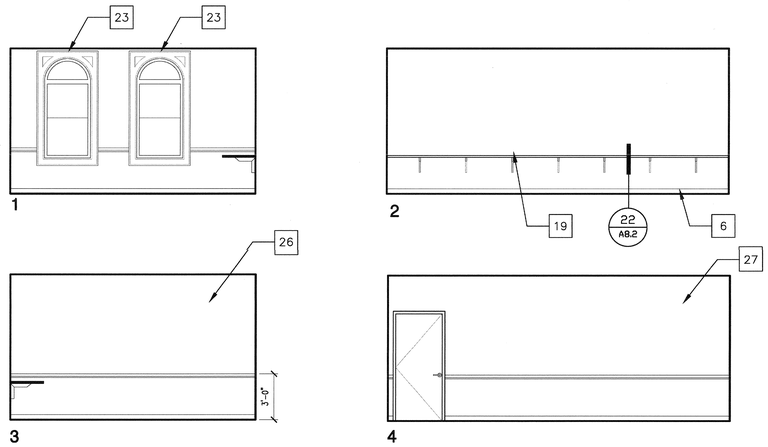

33 310 COUNTY CONFERENCE

SCALE: 1/4" = 1'-0"

1. AUTOMATIC SLIDING DOOR PER SCHEDULE
2. FIRE EXTINGUISHER LOCATION
3. BOOK DROP PER FLOOR PLAN
4. ACCORDION DOORS PER SCHEDULE
5. SPANDREL GLASS PER SCHEDULE
6. BASE TRIM PER FINISH PLAN
7. WALL MOUNTED STACKS PER FURNITURE PLAN
8. SINK CABINET AND UPPER STORAGE PER FURNITURE PLAN. PROVIDE 32" OPEN SPACE UNDER SINK TO COMPLY WITH ADA. SEE DETAIL 21/T2
9. SELF CHECK CABINETS PER FURNITURE PLAN
10. WALL MOUNTED WORK SURFACE PER FURNITURE PLAN
11. FREE STANDING STACKS PER FURNITURE PLAN
12. BULLETIN BOARD CABINET PER FURNITURE PLAN
13. GLASS DOOR AND SIDELITE PER SCHEDULE
14. PREFAB STEEL STAIR PER DETAIL 13/A8.2
15. WALL MOUNTED HAND RAIL PER DETAIL13/A8.2
16. RELOCATED WALL MOUNTED STEP L.IGHTS LOCATE 18" FROM FF.
17. ARTWALL. SEE REFLECTED CEILING PLAN
18. EXIT DOOR PER SCHEDULE
19. CHAIR RAIL PER FINISH PLAN
20. WALL SCONCE SEE ELECTRICAL
21. PROVIDE FIRE RATED GLASS. SEE SCHEDULE.
22. LOCKERS PER FURNITURE PLAN
23. CUSTOM TRIM AT WINDOW HEAD. SEE DETAIL 33/A7.3.
24. APPLIANCES PER FURNITURE PLAN
25. ADJUSTABLE SHELF LOCATION
26. DRY ERASE WALL PER FINISH PLAN
27. TACKABLE WALL PER FINISH PLAN

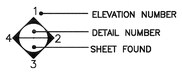

12 KEY NOTES

COUNTY OF SAN LUIS OBISPO
DEPARTMENT OF GENERAL SERVICES
1087 SANTA ROSA STREET
SAN LUIS OBISPO, CA 93408
PHONE 8057812200

RAVATT ALBRECHT & ASSOCIATES, INC.
ARCHITECTURE INTERIORS
ARCHITECTURE INTERIORS
GREG RAVATT, AIA
MECHANICAL, ELECTRICAL
JIM ALBRECHT, PE
820 PACIFIC STREET
SAN LUIS OBISPO CA 93401
PH/TXT: 805/786.4500 SLO
805/928.5002 SM
FAX: 805/786.4502 SLO
805/928.0095 SM
E-MAIL: OFFICE@RAVATTALBRECHT.COM

REGISTERED ARCHITECT
GREGORY ALLEN RAVATT
LIC. NO. C-18608
09/30/13
STATE OF CALIFORNIA

No.	Revision	Date
	PLANCHECK REV1	9.26.12
	PLANCHECK REV2	10.24.12
	PLANCHECK REV3	11.19.12

County Facility:

ATASCADERO LIBRARY RENOVATION

6555 CAPISTRANO AVE.
ATASCADERO CA 93422

Project Manager: M. DEMARTINI
Checked By: MD
Client Approval:
Date: 08/20/2012

CONTRACTOR SHALL VERIFY ALL DIMENSIONS AND EXISTING CONDITIONS PRIOR TO COMMENCING WORK. REPORT ANY DISCREPANCIES TO COUNTY PROJECT COORDINATOR OR TO THE PROJECT ARCHITECT.

Project Title : ATASCADERO LIBRARY RENOVATION
6555 CAPISTRANO AVE.
ATASCADERO CA 93422

Sheet Title : INTERIOR ELEVATION
SECOND STORY
ONESTOP

Sheet Number
A7.0
of Sheets

PROJECT No. 417

FILE No.

BIDDING SET 11-19-12

BID SET 03-26-13
BIDDING SET 11-19-12
BID SET 03-26-13

BID SET 03-26-13
BID SET 03-26-13

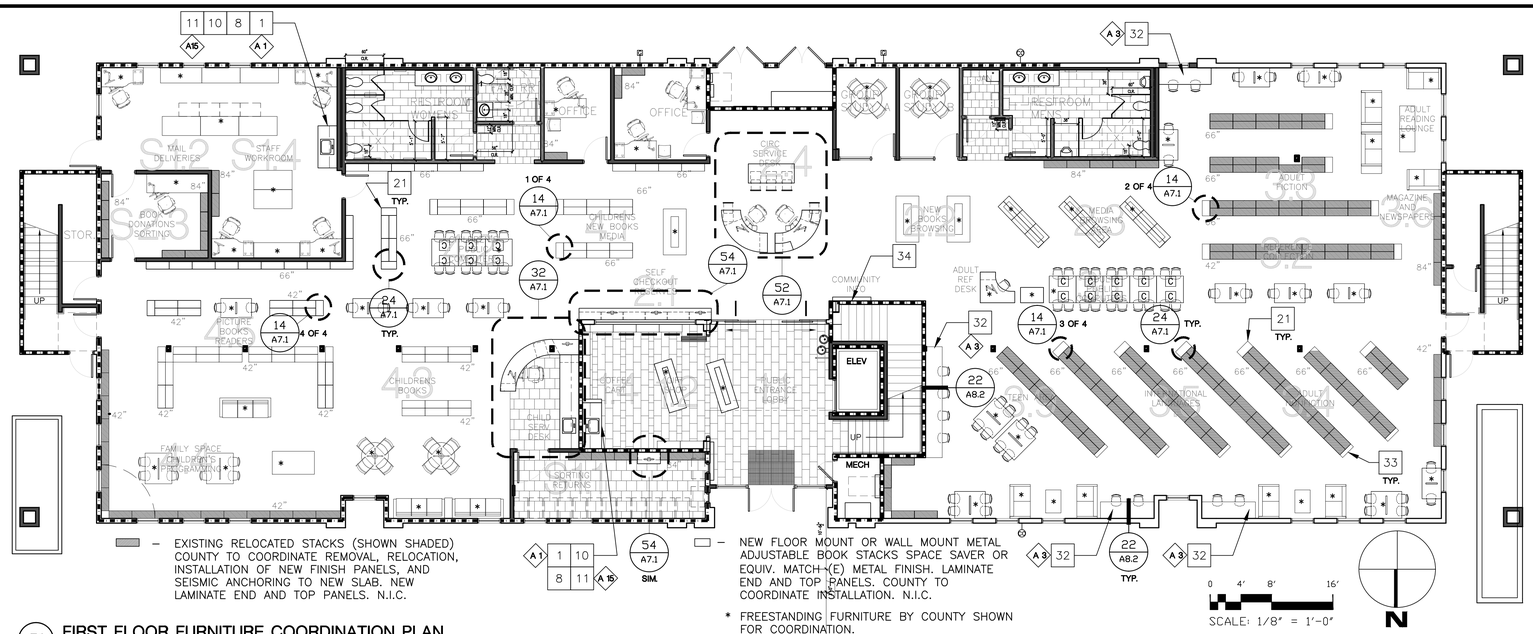

51 FIRST FLOOR FURNITURE COORDINATION PLAN

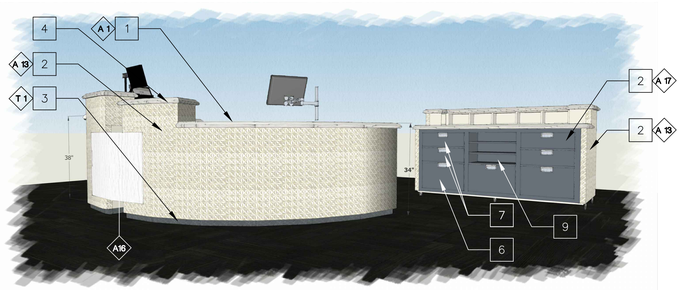

52 LOBBY DESK FRONT

32 CHILDREN'S DESK FRONT

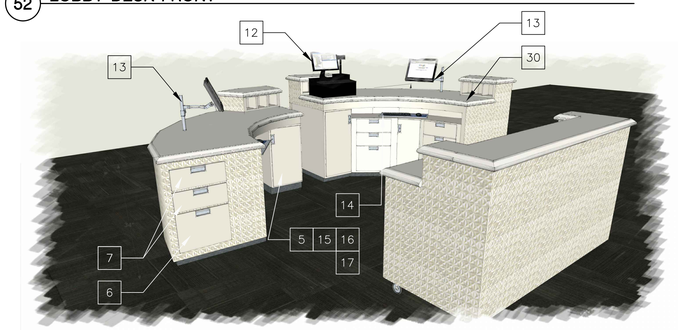

53 LOBBY DESK REAR

33 CHILDREN'S DESK BACK WALL

54 SELF CHECK COUNTER

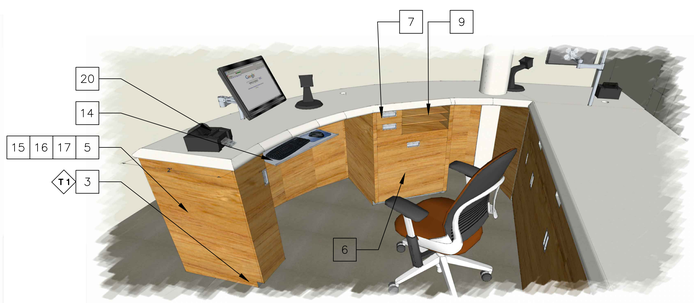

34 CHILDREN'S DESK DETAIL

24 STACK END PANEL

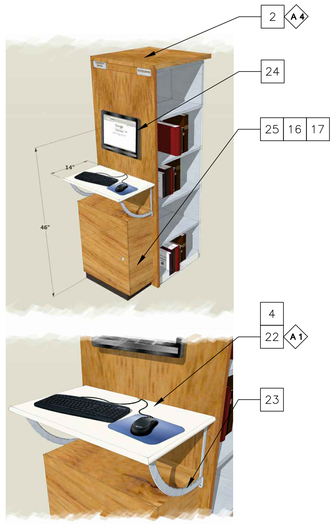

14 OPAC END PANEL

1. SOLID SURFACE COUNTER TOP O/ MEDIUM DENSITY FIBER BOARD SUBSTRATE. PROVIDE WIRE HOLES AS SHOWN
2. LAMINATE SURFACE O/ MEDIUM DENSITY FIBER BOARD SUBSTRATE.
3. VINYL TOE KICK
4. OGEE COUNTER EDGE, MINIMUM 1/2" RADIUS ALL CORNERS, NO SHARP EDGES.
5. 12"W CPU TOWER CABINET, CONCEALED HINGES, HAFELE PULL: 151.35.665, SS
6. VERTICAL FILE, RECESSED PULL, HAFELE PULL: 151.35.665, SS
7. BOX DRAWER, HAFELE PULL: 151.35.665, SS
8. CABINET W/ 2 ADJUSTABLE SHELVES AND DRAWERS, HAFELE PULL: 151.35.665, SS. UPPER CABINETS
9. 12"D OPEN FIXED SHELVES
10. UNDER MOUNT SINK AND FAUCET, SEE PLUMBING. OPEN SPACE UNDER, PER 21/T2
11. CERAMIC TILE BACKSPLASH WITH CUSTOM TILE INSERTS BY COMMISSIONED ARTIST
12. CASH REGISTER LEDGE. PROVIDE WIRE HOLE POWER AND DATA.
13. FLAT PANEL MONITOR ARM: WORKRITE, POISE
14. UNDER COUNTER KEYBOARD ARM: WORKRITE, PINNACLE AD
15. CABLE MANAGEMENT TRAY, TYPICAL ALL WORKSTATIONS: APC
16. 4" CPU CABINET FAN OUTLET, TYPICAL.
17. 2"D HORIZONTAL VENT INLET AT TOE KICK, TYPICAL.
18. 12"D LATERAL CPU CABINET. UNDERSIDE VENT.
19. 2.5"ø SUPPORT LEG: HAFELE, SS
20. BOOK SCANNER, RECEIPT PRINTER, MONITOR, AND CPU GEAR BY OWNER
21. 4"D X 22"W LAMINATE SHELF W/ HAFELE MOUNT 287.58.000.55. 18" SS STOP. X 1¼". MINIMUM 1/2" RADIUS ALL CORNERS, NO SHARP EDGES.
22. SOLID SURFACE W/ BULL NOSE EDGE. PROVIDE WIRE HOLE
23. SHELF BRACKET MOCKETT SW55 SS
24. PROVIDE MONITOR MOUNT AND WIRE HOLE SIIG CE-MT0012-S1
25. 12" DEEP X 20"W X 22" H CPU CABINET W/ TOE VENT
26. NOT USED
27. NOT USED
28. NOT USED
29. NOT USED
30. ADJUSTABLE CUBBIE SHELVES
31. NOT USED
32. WALL MOUNTED WORK SURFACE
33. SLAT WALL, MAGAZINE RACK
34. 60" X 72"H CASED BULLETIN BOARD WITH TACKABLE CARPET BACKING

GENERAL NOTES:

- BOOK SCANNER, RECEIPT PRINTER, MONITOR, AND CPU GEAR BY OWNER.
- COORDINATE AND ACCOMMODATE ALL EQUIPMENT REQUIREMENTS WITH OWNER PRIOR TO CABINET FABRICATION AND INSTALLATION
- SEE ELECTRICAL FLOOR PLANS FOR ELECTRICAL OUTLETS AND DATA LOCATIONS
- SEE PLUMBING PLANS FOR FIXTURE SPECIFICATION, PLUMBING, AND WATER HEATING

11 KEY NOTES

- SEE FINISH PLAN FOR MATERIALS DESCRIPTIONS
- BOOK STACKS FREESTANDING FURNITURE AND MODULAR FURNITURE BY COUNTY, N.I.C.

12 FINISH SCHEDULE

TRIM	
T1	TYPE: COLOR INTEGRATED WALL BASE COLOR: ARMSTRONG, 20 OYSTER
SURFACES	
A1	TYPE: HORIZONTAL SOLID SURFACE COLOR: AVONITE SURFACES, FOUNDATIONS, NORDIC F1-9119
A3	TYPE: HORIZONTAL LAMINATE SURFACE COLOR: FORMICA, NEUTRAL WEFT, 5875-58, MATTE COLLECTION
A4	TYPE: HORIZONTAL AND VERTICAL LAMINATE SURFACE COLOR: FORMICA, GOLD SPECKLE MAPLE, 1531 VL
A13	TYPE: MARLITE VOLTA FLEX, TANGLE. COLOR: FACTORY FINISH. BENJAMIN MOORE, BAKED TERRA COTTA 1202
A15	TYPE: VERTICAL GLAZED CERAMIC COLOR: CROSSVILLE 6X6 COLOR BLOX TOO, A1177 SATIN SHEETS, VERT
A16	TYPE: LUMICOR RESIN PANEL ON STAINLESS STANDOFFS COLOR: WOVEN SPEARMINT BASE WITH PAMPAS REED OVERLAY
A17	TYPE: VERTICAL LAMINATE SURFACE COLOR: FORMICA, BY COUNTY

COUNTY OF SAN LUIS OBISPO
DEPARTMENT OF GENERAL SERVICES
1087 SANTA ROSA STREET
SAN LUIS OBISPO, CA 93408
PHONE 8057812200

read · seek · grow
Atascadero Library

RAVATT SEIBITCHI & ASSOCIATES, INC.
ARCHITECTURE ENGINEERING
ARCHITECTURE: ©FRANK G. RAVATT, AIA
MECHANICAL: M. REZA SEIBITCHI, PE
ELECTRICAL: STEVE J. SANELLI III, CMBSTC, CA 93463
PHONE: 805.786.4.000 X&X2
805.928.X&X2.0.0M
FAX: 805.786.4.0902 X&X2
805.928.0895.0M
EMAIL: STEVE.SANELLI@RAVATT-SEIBITCHI.COM

REGISTERED ARCHITECT
GREGORY ALLEN RAVATT
LIC. NO. C-20808
09/30/13
STATE OF CALIFORNIA

No.	Revision	Date
	ADDEND #1 REV4	12.21.12
	ADDEND #2 REV5	1.10.13

County Facility:

ATASCADERO LIBRARY RENOVATION

6555 CAPISTRANO AVE.
ATASCADERO CA 93422

Project Manager: M. DEMARTINI
Checked By: MD
Client Approval:
Date: 08/20/2012

CONTRACTOR SHALL VERIFY ALL DIMENSIONS AND EXISTING CONDITIONS PRIOR TO COMMENCING WORK. REPORT ANY DISCREPANCIES TO COUNTY PROJECT COORDINATOR OR TO THE PROJECT ARCHITECT.

Project Title : ATASCADERO LIBRARY RENOVATION
6555 CAPISTRANO AVE. ATASCADERO CA 93422

Sheet Title : FURNITURE PLAN FIRST STORY

Sheet Number
A7.1
of Sheets

PROJECT No. 417

FILE No.

BIDDING ADDENDUM #2 1-10-13

BID SET 03-26-13
BIDDING ADDENDUM #2 1-10-13
BID SET 03-26-13

BID SET 03-26-13
BID SET 03-26-13

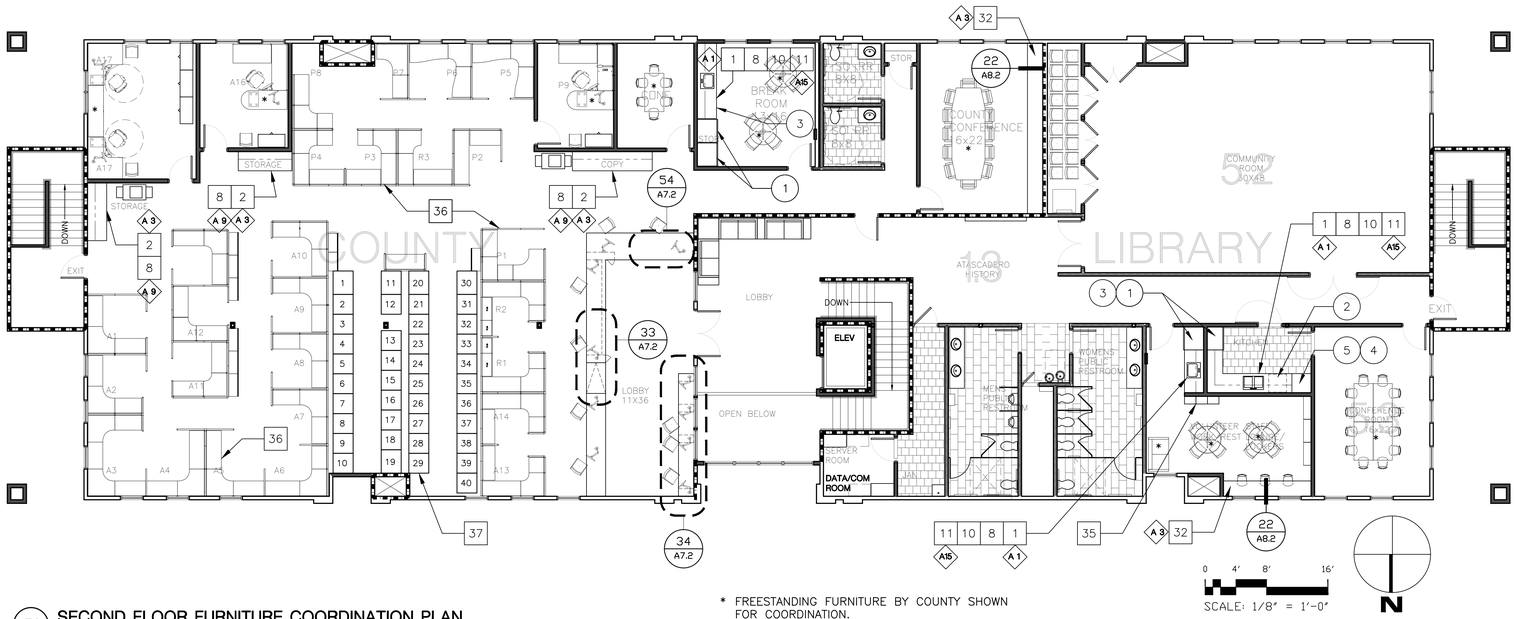

* FREESTANDING FURNITURE BY COUNTY SHOWN FOR COORDINATION.

51 SECOND FLOOR FURNITURE COORDINATION PLAN

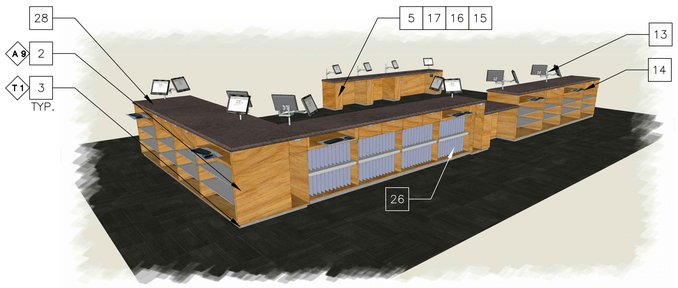

52 PERSPECTIVE BACK

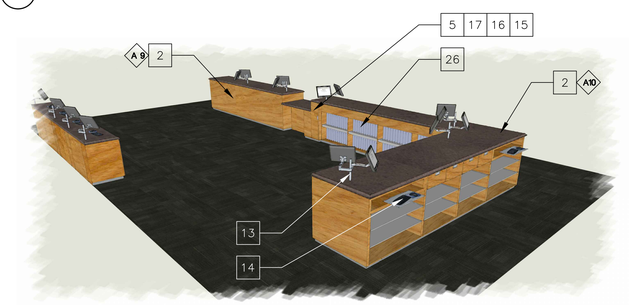

53 PERSPECTIVE FRONT

54 SHELVING DETAIL, PLANNING AND CLERK

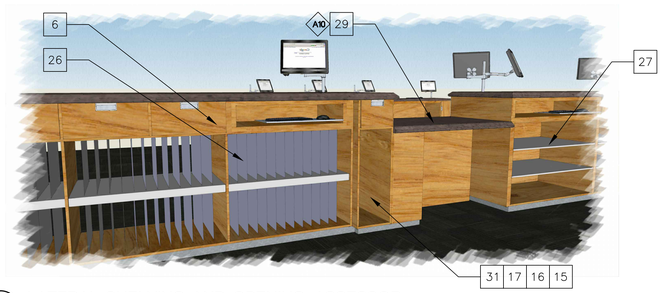

33 LATERAL SHELVING AND OPENING, ASSESSOR

34 PUBLIC SELF SERVE COUNTER

1. SOLID SURFACE COUNTER TOP O/ MEDIUM DENSITY FIBER BOARD SUBSTRATE. PROVIDE WIRE HOLES AS SHOWN.
2. LAMINATE SURFACE O/ MEDIUM DENSITY FIBER BOARD SUBSTRATE.
3. VINYL TOE KICK
4. OGEE COUNTER EDGE
5. 12"W CPU TOWER CABINET, CONCEALED HINGES, HAFELE PULL: 151.35.665, SS, VENTS IN SIDE AND FRONT DOOR
6. NOT USED
7. NOT USED
8. CABINET W/ 2 ADJUSTABLE SHELVES AND DRAWERS, HAFELE PULL: 151.35.665, SS. UPPER CABINETS.
9. NOT USED
10. UNDER MOUNT SINK AND FAUCET, SEE PLUMBING
11. CERAMIC TILE BACK SPLASH WITH CUSTOM TILE INSERTS BY COMMISSIONED ARTIST
12. NOT USED
13. FLAT PANEL MONITOR ARM: WORKRITE, POISE
14. UNDER COUNTER KEYBOARD ARM: WORKRITE, PINNACLE AD
15. CABLE MANAGEMENT TRAY, TYPICAL ALL WORKSTATIONS: APC
16. 4" CPU CABINET FAN OUTLET, TYPICAL.
17. 2"D HORIZONTAL VENT INLET AT TOE KICK, TYPICAL.
18. 12"D LATERAL CPU CABINET. UNDERSIDE VENT.
19. NOT USED
20. NOT USED
21. NOT USED
22. NOT USED
23. NOT USED
24. NOT USED
25. NOT USED
26. VERTICAL METAL DIVIDERS, MINIMUM 100
27. 30" DEEP ADJUSTABLE OPEN SHELVES
28. HORIZONTAL LAMINATE COUNTER TOP O/ MEDIUM DENSITY FIBER BOARD SUBSTRATE, PROVIDE WIRE HOLES WHERE NOTED
29. 36" WIDE COUNTER OPENING, SEE DETAIL 44/A8.2
30. NOT USED
31. OPEN CPU CABINET W/ TOE KICK
32. WALL MOUNTED WORK SURFACE
33. NOT USED
34. NOT USED
35. REUSED WALL MOUNTED FLOOR STANDING LOCKERS. PROVIDE A 4" TOE KICK PLATFORM WITH VINYL BASE.
36. MODULAR SYSTEMS FURNITURE PURCHASE, LAYOUT AND INSTALLATION BY COUNTY. PROVIDE POWER AND DATE PER ELEC. SEE DETAIL 23/A8.3 FOR WALL SUPPORT.
37. HIGH DENSITY STORAGE UNIT. AURORA STORAGE TIMES-2. CONFIGURATION BY COUNTY. PROVIDE AND INSTALL. SEE STRUCT. SHOP DRAWINGS ARE A DEFERRED SUBMITTAL.

GENERAL NOTES:

- BOOK SCANNER, RECEIPT PRINTER, MONITOR, AND CPU GEAR BY OWNER.
- COORDINATE AND ACCOMMODATE ALL EQUIPMENT REQUIREMENTS WITH OWNER PRIOR TO CABINET FABRICATION AND INSTALLATION
- SEE ELECTRICAL FLOOR PLANS FOR ELECTRICAL OUTLETS AND DATA LOCATIONS
- SEE PLUMBING PLANS FOR FIXTURE SPECIFICATION, PLUMBING, AND WATER HEATING

11 KEY NOTES

- SEE FINISH PLAN FOR MATERIALS DESCRIPTIONS
- BOOK STACKS FREESTANDING FURNITURE AND MODULAR FURNITURE COORDINATION PLAN BY COUNTY, N.I.C.

TRIM	
T1	TYPE: COLOR INTEGRATED WALL BASE COLOR: ARMSTRONG, 20 OYSTER
SURFACES	
A1	TYPE: HORIZONTAL SOLID SURFACE COLOR: AVONITE SURFACES, FOUNDATIONS, NORDIC F1-9119
A3	TYPE: HORIZONTAL LAMINATE SURFACE COLOR: FORMICA, NEUTRAL WEFT, 5875-58, MATTE COLLECTION
A4	TYPE: HORIZONTAL AND VERTICAL LAMINATE SURFACE COLOR: FORMICA, GOLD SPECKLE MAPLE, 1531 VL
A9	TYPE: VERTICAL LAMINATE SURFACE COLOR: FORMICA, AMBER MAPLE, 7012-58, MATTE FINISH
A10	TYPE: HORIZONTAL SURFACE COLOR: NEVAMAR, ARP SURFACE, CHARCOAL FUSION FN-6-1T
A15	TYPE: VERTICAL GLAZED CERAMIC COLOR: CROSSVILLE 6X6 COLOR BLOX TOO, A1177 SATIN SHEETS, VERT

12 FINISH SCHEDULE

1. REFRIGERATOR – WHIRLPOOL 21.1 CU. FT. TOP FREEZER REFRIGERATOR WITH CEE TIER 3 RATING.
2. DISHWASHER – WHIRLPOOL 24" BUILT-IN, ENERGY STAR.
3. MICROWAVE – KENMORE ELITE WHITE 2.0 CU. FT. COUNTERTOP MICROWAVE MODEL #79202
4. MICROWAVE/CONVECTION OVEN: SHARP 1.5 CU. FT. 900 WATT CONVECTION MICROWAVE, MODEL # T930 AW
5. WARMING DRAWER: SHARP 30" WARMING DRAWER, MODEL # KB-6100NW

13 APPLIANCE SCHEDULE

COUNTY OF SAN LUIS OBISPO
DEPARTMENT OF GENERAL SERVICES
1087 SANTA ROSA STREET
SAN LUIS OBISPO, CA 93408
PHONE 805.781.5200

RAVATT SCHECHT & ASSOCIATES, INC.
ARCHITECTURE AND ENGINEERING
ARCHITECTURE: GREG RAVATT, AIA
MECHANICAL: MIKE HUK, ME
JIM ALBRECHT, PE
1570 PACIFIC STREET
SAN LUIS OBISPO, CA 93401
PHONE: 805.786.4190 X&2
805.928.XXXX (AM)
FAX: 805.786.4792 X&5
805.928.0895 (M)
EMAIL: JIM@RAVATT-ARCHITECT.COM

REGISTERED ARCHITECT
GREGORY ALLEN RAVATT
C.S.L. No. C20808
09/30/13
STATE OF CALIFORNIA

No.	Revision	Date
	ADDEND #1 REV4	12.21.12
	ADDEND #2 REV5	1.10.13

County Facility:

ATASCADERO LIBRARY RENOVATION

6555 CAPISTRANO AVE.
ATASCADERO CA 93422

Project Manager: M. DEMARTINI
Checked By: MD
Client Approval:
Date: 08/20/2012

CONTRACTOR SHALL VERIFY ALL DIMENSIONS AND EXISTING CONDITIONS PRIOR TO COMMENCING WORK. REPORT ANY DISCREPANCIES TO COUNTY PROJECT COORDINATOR OR TO THE PROJECT ARCHITECT.

Project Title : ATASCADERO LIBRARY RENOVATION
6555 CAPISTRANO AVE.
ATASCADERO CA 93422

Sheet Title : FURNITURE PLAN SECOND STORY

Sheet Number
A7.2
of Sheets

PROJECT No. 417

FILE No.

BIDDING ADDENDUM #2 1-10-13

BID SET 03-26-13
BIDDING ADDENDUM #2 1-10-13
BID SET 03-26-13

BID SET 03-26-13
BID SET 03-26-13

DOOR AND FRAME SCHEDULE

MARK (#)	WD	HGT	THK	DOOR TYPE	FRAME TYPE	FIRE RATING	HW SET	MODE	OUTSIDE LOCATION	INSIDE LOCATION	DOOR ELEV.	NOTES
1	6'-0"	8'-0"	1¾"	A/G	ALF	NON-RATED	01R	SL	EXTERIOR	PUBLIC LOBBY	B	EXISTING, TEMPERED, PANIC, E LOCK
2	13'-0"	7'-0"		A/G	ALF	NON-RATED	23	RU	PUBLIC LOBBY	GIFT SHOP	F	TEMPERED
3	8'-0"	7'-0"	1¾"	A/G	ALF	NON-RATED	07	SL	PUBLIC LOBBY	LOBBY	D	TEMPERED
4	2'-8"	7'-0"	1¾"	HMD	HMF	60 PPS	04	SGL	PUBLIC LOBBY	MECHANICAL	A	EXISTING
5	4'-0"	7'-0"	1¾"	HMD	HMF	NON-RATED	08	SGL	FAMILY RECEPTION	SORTING	G	
6	3'-0"	7'-0"	1¾"	HMD	HMF	60 PPS	06A	SGL	STAIRWELL	LIBRARY	A	EXISTING, PANIC, E LOCK
7	3'-0"	7'-0"	1¾"	HMD	HMF	60 PPS	24	SGL	EXTERIOR	STAIR	A	
8	3'-0"	7'-0"	1¾"	HMD	HMF	60 PPS	25	SGL	LIBRARY	STORAGE	A	EXISTING, PANIC, E LOCK
9	3'-0"	7'-0"	1¾"	HMD	HMF	NON-RATED	13	SGL	LIBRARY	FRIENDS	G	
10	3'-0"	7'-0"	1¾"	HMD	HMF	NON-RATED	13	SGL	FRIENDS	WORKROOM	A	
11	3'-6"	7'-0"	1¾"	HMD	HMF	NON-RATED	02R	SGL	EXTERIOR	WORKROOM	H	DETAIL 41 & 52/A8.2, PANIC
12	3'-0"	7'-0"	1¾"	HMD	HMF	NON-RATED	17R	SGL	LIBRARY	WORKROOM	G	
13	3'-0"	7'-0"	1¾"	HMD	HMF	NON-RATED	14	SGL	LIBRARY	RESTROOM I/S	A	EXISTING DETAIL 41 & 52/A8.2 DETAIL 42/A8.2
14	3'-0"	7'-0"	1¾"	HMD	HMF	NON-RATED	15	SGL	LIBRARY	FAMILY RESTROOM	A	PRIVACY LOCK DETAIL 42/A8.2
15	3'-0"	7'-0"	1¾"	HMD	HMF	NON-RATED	13	SGL	LIBRARY	OFFICE	G	
16	3'-0"	7'-0"	1¾"	HMD	HMF	NON-RATED	13	SGL	LIBRARY	OFFICE	G	
17	6'-0"	7'-0"	1¾"	HMD	HMF	60 PPS	03	PR	EXTERIOR	ELECTRICAL	B	
18	6'-0"	7'-0"	1¾"	HMD	HMF	60 PPS	03	PR	EXTERIOR	ELECTRICAL	B	
19	3'-0"	7'-0"	1¾"	HMD	HMF	NON-RATED	13R	SGL	LIBRARY	GROUP STUDY	C	TEMPERED DETAIL 41 & 52/A8.2
20	3'-0"	7'-0"	1¾"	HMD	HMF	NON-RATED	13R	SGL	LIBRARY	GROUP STUDY	C	TEMPERED DETAIL 41 & 52/A8.2
21	3'-0"	7'-0"	1¾"	HMD	HMF	NON-RATED	10	SGL	VESTIBULE	JANITOR	A	
22	3'-0"	7'-0"	1¾"	HMD	HMF	NON-RATED	14	SGL	LIBRARY	RESTROOM I/S	A	EXISTING DETAIL 41 & 52/A8.2 DETAIL 42/A8.2
23	3'-0"	7'-0"	1¾"	HMD	HMF	NON-RATED	25	SGL	STAIR	STORAGE	A	
24	3'-0"	7'-0"	1¾"	HMD	HMF	60 PPS	06	SGL	STAIRWELL	ADULT	A	EXISTING, PANIC, E LOCK
25	3'-0"	7'-0"	1¾"	HMD	HMF	60 PPS	24	SGL	EXTERIOR	STAIR	A	PANIC, E LOCK
26	6'-0"	7'-0"	1¾"	HMD	HMF	60 PPS	18R	SL	PUBLIC LOBBY	NCSC LOBBY	E	FIRE RATED GLASS DETAIL 41 & 52/A8.2 PANIC
27	3'-0"	7'-0"	1¾"	HMD	HMF	60 PPS	16R	SGL	STAIRWELL	NCSC	A	EXISTING, PANIC
28	3'-0"	7'-0"	1¾"	HMD	HMF	NON-RATED	13	SGL	NCSC	ASSESSOR	G	DETAIL 41 & 52/A8.2
29	3'-0"	7'-0"	1¾"	HMD	HMF	NON-RATED	13	SGL	NCSC	ASSESSOR	G	
30	3'-0"	7'-0"	1¾"	HMD	HMF	NON-RATED	13	SGL	NCSC	PLANNING	G	
31	3'-0"	7'-0"	1¾"	HMD	HMF	NON-RATED	12R	SGL	HALL	CONFERENCE	G	
32	3'-0"	7'-0"	1¾"	HMD	HMF	NON-RATED	11R1	SGL	HALL	BREAKROOM	C	
33	3'-0"	7'-0"	1¾"	HMD	HMF	NON-RATED	15R	SGL	HALL	SINGLE OCCUPANCY TOILET	A	PRIVACY LOCK DETAIL 42/A8.2
34	3'-0"	7'-0"	1¾"	HMD	HMF	NON-RATED	15R	SGL	HALL	SINGLE OCCUPANCY TOILET	A	PRIVACY LOCK DETAIL 42/A8.2
35	3'-0"	7'-0"	1¾"	HMD	HMF	NON-RATED	12	SGL	HALL	CONFERENCE	G	
36	3'-0"	7'-0"	1¾"	HMD	HMF	60 PPS	05R	SGL	PUBLIC LOBBY	HALL	A	PANIC, E LOCK
37	5'-0"	7'-0"	1¾"	HMD	HMF	NON-RATED	19	PR	COMMUNITY ROOM	STORAGE	B	
38	5'-0"	7'-0"	1¾"	HMD	HMF	NON-RATED	19	PR	COMMUNITY ROOM	STORAGE	B	
39	5'-0"	7'-0"	1¾"	HMD	HMF	NON-RATED	19	PR	COMMUNITY ROOM	STORAGE	B	
40	6'-0"	7'-0"	1¾"	HMD	HMF	NON-RATED	20	PR	COMMUNITY ROOM	STORAGE	B	
41	6'-0"	7'-0"	1¾"	HMD	HMF	NON-RATED	22R	PR	COMMUNITY LOBBY	COMMUNITY ROOM	B	DETAIL 41 & 52/A8.2 PANIC, E LOCK
42	6'-0"	7'-0"	1¾"	HMD	HMF	NON-RATED	22	PR	HALL	COMMUNITY ROOM	B	DETAIL 41 & 52/A8.2 PANIC
43	3'-0"	7'-0"	1¾"	HMD	HMF	60 PPS	16R	SGL	STAIRWELL	HALL	A	EXISTING PANIC, E LOCK
44	3'-0"	7'-0"	1¾"	HMD	HMF	NON-RATED	13R1	SGL	HALL	CONFERENCE ROOM	C	DETAIL 41 & 52/A8.2 E LOCK
45	3'-0"	7'-0"	1¾"	HMD	HMF	NON-RATED	13	SGL	CONFERENCE	KITCHEN	A	DETAIL 41 & 52/A8.2
46	3'-0"	7'-0"	1¾"	HMD	HMF	NON-RATED	13R1	SGL	HALL	KITCHEN	G	E LOCK
47	3'-0"	7'-0"	1¾"	HMD	HMF	NON-RATED	11R	SGL	HALL	LOUNGE	G	
48	3'-0"	7'-0"	1¾"	HMD	HMF	NON-RATED	14R	SGL	COMMUNITY LOBBY	RESTROOM	A	DETAIL 41 & 52/A8.2 HOLD BACK DETAIL 42/A8.2
49	2'-0"	7'-0"	1¾"	HMD	HMF	NON-RATED	21	SGL	COMMUNITY LOBBY	PIPE CHASE	A	DETAIL 42/A8.2
50	3'-0"	7'-0"	1¾"	HMD	HMF	NON-RATED	14R	SGL	COMMUNITY LOBBY	RESTROOM	A	HOLD BACK DETAIL 42/A8.2
51	3'-0"	7'-0"	1¾"	HMD	HMF	NON-RATED	09	SGL	HALL	DATA/COM	A	EXISTING
52	3'-0"	7'-0"	1¾"	HMD	HMF	NON-RATED	25	SGL	COMMUNITY LOBBY	SERVER HALLWAY	A	EXISTING

4

DOOR STANDARDS

	ITEM	MANUFACTURER:	MODEL:	TYPE:	COLOR:
D1	SWING DOORS	CECO	TRIO	FIBERGLASS CORE	BENJAMIN MOORE, AFFINITY, FUSION AF-675 (FRAME AND DOOR)
D2	MAIN ENTRY DOORS	HORTON	HD SERIES 2500 ELEGANT	110 BIPARTING O-SX-SX-O	DARK ANODIZED BRONZE
D3	FOLDING DOORS	NANAWALL	SL35	ALUMINUM	DARK ANODIZED BRONZE

52 DOOR SCHEDULE

GENERAL REQUIREMENTS

A. LOCATE LATCHING HARDWARE BETWEEN 30" TO 44" ABOVE THE FINISHED FLOOR, PER CALIFORNIA BUILDING CODE, SECTION 1133B.2.5.1.
B. ADJUST DOORS TO OPEN WITH NOT MORE THAN 5.0 LBS PRESSURE TO OPEN AT EXTERIOR DOORS AND 5.0 LBS AT INTERIOR DOORS. AS ALLOWED PER CALIFORNIA BUILDING CODE, SECTION 1133B.2.5, LOCAL AUTHORITY MAY INCREASE THE ALLOWABLE PRESSURE FOR FIRE DOORS TO ACHIEVE POSITIVE LATCHING, BUT NOT TO EXCEED 15 LBS. DOOR CLOSER WHEN PROVIDED, THEN THE SWEEP PERIOD OF THE CLOSER SHALL BE ADJUSTED TO SO THAT FROM AN OPEN POSITION OF 70 DEGREES, THE DOOR WILL TAKE AT LEAST 3 SECONDS TO MOVE TO A POINT 3" FROM THE LATCH, MEASURED AT THE LANDING SIDE OF THE DOOR. 1133B 2.5.1.
C. ALL HARDWARE TO MEET CALIFORNIA BUILDING CODE SECTIONS 1133B.2.1, 1133B.2.5.1 AND 1003.3.1.8L.
D. THRESHOLDS: COMPLY WITH CALIFORNIA BUILDING CODE SECTION 1133B.2.4.1.
E. ALL EGRESS DOORS SHALL BE READILY OPENABLE FROM THE EGRESS SIDE WITHOUT THE USE OF A KEY OR SPECIAL KNOWLEDGE OR EFFORT. SEE SECTION 1008.1.8.

MULTIPLE-ACCOMODATION TOILET FACILITIES

A. WATER CLOSET COMPARTMENT SHALL BE EQUIPPED WITH A DOOR THAT HAS AN AUTOMATIC CLOSING DEVICE, AND SHALL HAVE A CLEAR OPENING WIDTH OF 34" WHEN LOCATED AT THE SIDE WITH THE DOOR POSITIONED AT AN ANGLE OF 90' FROM ITS CLOSED POSITION
B. THE INSIDE AND OUTSIDE OF THE COMPARTMENT DOOR SHALL BE EQUIPPED WITH A LOOP OR U-SHAPED HANDLE IMMEDIATELY BELOW THE LATCH. THE LATCH SHALL BE FLIP-OVER STYLE, SLIDING, OR OTHER HARDWARE THAT DOES NOT REQUIRE THE USER TO GRASP OR TWIST.
C. EXCEPT FOR DOOR-OPENING WIDTHS AND DOOR SWINGS, A CLEAR, UNOBSTRUCTED ACCESS OF NOT LESS THAN 44" SHALL BE PROVIDED TO ACCESSIBLE WATER CLOSET COMPARTMENTS
D. MANEUVERING SPACE AT THE COMPARTMENT DOOR SHALL COMPLY WITH CBC SEC. 1133B.2.4.2 AND 1133B.2.4.3 [ITEM 4.5]

DOOR SCHEDULE NOTES:

1. INSULATED STEEL DOORS W/ COMPRESSION SEALS AT HEAD, JAMB AND THRESHOLD
2. COMPRESSION SEALS AT HEAD, JAMB AND THRESHOLD.
3. TEMPERED GLASS (MARKED T)
4. VERIFY ALL DOOR STYLES WITH OWNER/ARCHITECT, SEE SPECS.
5. ALL EXTERIOR DOORS TO HAVE FULL PERIMETER WEATHER STRIPPING (MARKED W)
6. SEE PLANS FOR DOOR SWING DIRECTION AND OPERATION.
7. ALL DOOR SIZES ARE NOMINAL. VERIFY ROUGH OPENING WITH MANUFACTURER.
8. MAIN ENTRY DOOR SHALL BE AUTOMATIC SLIDING COMMERCIAL DOORS PER STANDARDS
9. THRESHOLDS SHALL BE ½" HIGH MAXIMUM AND SHALL COMPLY WITH ADA STANDARDS PER THE CBC. SEE DETAIL ON THIS PAGE. SMOOTH THRESHOLD PEMKO 271 OR EQUIV. PER DETAIL.
10. ALL SWING DOORS SHALL HAVE STEELCRAFT STEEL DOOR FRAMES OR EQUIV.
11. ALL SWING DOORS SHALL BE STEELCRAFT DOOR L-SERIES OR EQUAL.
12. PROVIDE SELF CLOSER, PANIC HARDWARE, ADA COMPLIANT PER SCHEDULE PROVIDE SELF CLOSER, 20 MIN. RATED DOOR (MARKED 13)
13. PROVIDE ADJUSTABLE JAMB SEAL PEMKO 350SR AND ADJUSTABLE FIXED DOOR BOTTOM SWEEP PEMKO 211 AND OR EQUIV AT SOUND WALLS PER SCHEDULE, SEE DETAILS 51,52,53,54/A8.2
14. KICKPLATE, MIN 10"

54 DOOR SCHEDULE NOTES

HARDWARE NOTES

DESCRIPTION	PRODUCT	MODEL #	NOTES
KEY SYSTEM	SCHLAGE, PRIMUS LEVEL 3 INTERCHANGEABLE CORE (IC), FACTORY REGISTERED, PATENT PROTECTED KEY SYSTEM		SUBMIT TO COUNTY TO STAMP TO COUNTY'S IDENTIFICATION SYSTEM. NO SUBSTITUTIONS
LOCKSETS	SCHLAGE, SERIES L OR D. NO SUBSTITUTIONS	PRIMUS 6 PIN, KEYWAY DESIGNATED BY COUNTY, LEVEL 3 IC CYLINDERS. NO SUBSTITUTIONS	COUNTY TO KEY AND PROVIDE PRIMUS CORES. NO SUBSTITUTIONS
DEADBOLTS	SCHLAGE IC TYPE BODY. LARGE FORMAT. NO SUBSTITUTIONS	PRIMUS CORE, B700R OR B660R SERIES. NO SUBSTITUTIONS	NO SUBSTITUTIONS
COMBINATION ENTRY CONTROL LOCKS	SCHLAGE AD SERIES. NO SUBSTITUTIONS	PER REQUIREMENTS. NO SUBSTITUTIONS	PRIMUS INTERCHANGEABLE CORE. NO SUBSTITUTIONS
ELECTRONIC ACCESS CONTROLS	SCHLAGE, AD SERIES, MTK WITH 8 AA BATTERIES. SPARTA LEVER DESIGN. NO SUBSTITUTIONS		NO SUBSTITUTIONS
PADLOCKS	SCHLAGE, KRYPTONITE SERIES. NO SUBSTITUTIONS	FULL IC CYLINDER - ADAPTABLE. NO SUBSTITUTIONS	NO SUBSTITUTIONS
CABINET LOCKS	SCHLAGE, CL 1000/2000 SERIES		NO SUBSTITUTIONS
DOOR CLOSERS	LCN. NO SUBSTITUTIONS	EXTERIOR: LCN 4040 SERIES, USE EDA ARMS AT OUT-SWINGING DOORS. INTERIOR: LCN 4040. AUTOMATIC OPERATORS: AT RETRO-FIT APPLICATIONS, USE LCN 4600 SERIES. AT NEW APPLICATIONS, USE DOR-O-MATIC SENIOR SWING SERIES. NO SUBSTITUTIONS	MOUNT ON ROOM SIDE OR PULL SIDE U.O.N. NO SUBSTITUTIONS
PANIC HARDWARE	VON DUPRIN. NO SUBSTITUTIONS	VON DUPRIN CD98 OR CD35 SERIES. NO SUBSTITUTIONS	USE KEY-REMOVABLE MULLIONS PLUS RIM DEVICES AT PAIRS WHEN POSSIBLE. USE LBR AND 996-F LEVER TRIM AT RATED OPENINGS LESS CD. USE 94 SERIES WHEN ADVISED. NO SUBSTITUTIONS
MULLIONS	VON DUPRIN. NO SUBSTITUTIONS	KR SERIES W/ MT54 STORAGE BRACKET KITS. NO SUBSTITUTIONS	NO SUBSTITUTIONS

GENERAL NOTES:
- SEE SPEC SECTION 087100 - DOOR HARDWARE, FOR COMPLETE SPECIFICATION
- ADA COMPLIANT WHERE APPLICABLE
- CONTACT FACILITY SERVICES - MAINTENANCE (805) 781-5122
- NO SUBSTITUTIONS
- E LOCKS REQUIRED PER SCHEDULE AND SPECIFICATIONS

54 DOOR HARDWARE NOTES

WINDOW SCHEDULE

MARK (A)	SIZE WIDTH	SIZE HEIGHT	TYPE	MATERIAL	NOTES
A	15'-0"	5'-0"	4	TEMPERED	
B	3'-0"	5'-0"	2		
C	5'-6"	7'-0"	3		
D	3'-0"	6'-6"	1		
E	3'-0"	6'-6"	1		
F	3'-0"	6'-6"	1		
G	3'-0"	6'-6"	1		
H	3'-0"	6'-6"	1		
I	5'-6"	7'-0"	3		
J	3'-0"	6'-6"	1		
H	4'-0"	4'-0"	5	FIRE RATED	

WINDOW STANDARDS

	ITEM	MANUFACTURER:	MODEL:	TYPE:	COLOR:
W1	WINDOWS	PELLA	PROLINE	ALUMINUM CLAD, WOOD	ANODIZED FACTORY FINISH TO MATCH (E)
W2	DECO GLASS	OMNIDECOR	DECORFLOU	SPANDREL GLASS	BI-FUZZY, EXTRACLEAR

(F) ALL GLAZING FOR ENTIRE UNIT TO BE FIRE RATED GLASS, FIRELITE OR EQUIV., ¾ HOUR
(T) ALL GLAZING FOR ENTIRE UNIT TO BE TEMPERED GLASS
(TH) PROVIDE ALUMINUM THRESHOLD FOR DOOR OPENING PORTION OF GLAZING
(W) PROVIDE FULL PERIMETER WEATHER STRIPPING FOR DOOR PORTION OF GLAZING

SEE DETAILS FOR CUSTOM GLASS WALL CONFIGURATION

ALL WINDOW HARDWARE PER MANUFACTURER FACTORY FINISH

SEE PLANS ELEVATIONS FOR WINDOW AND EXTERIOR DOOR SWINGS AND OPERATION.

ALL MULTIPLE WINDOWS TO BE MULLED PER PLAN/ELEVATION.

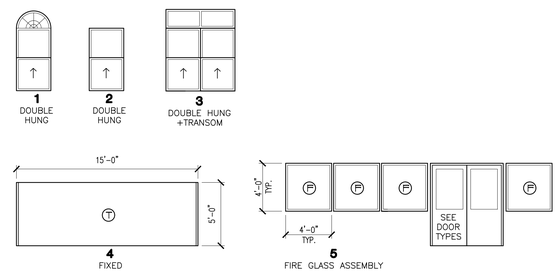

NOTE: ¾-HOUR FIRE PROTECTED WINDOW ASSEMBLY TO CONFORM TO CBC SECTION 715.5.8. ASSEMBLY DOES NOT EXCEED 25% OF THE COMMON WALL AREA

32 WINDOW SCHEDULE AND TYPES

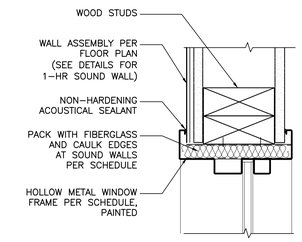

11 WINDOW HEAD/JAMB/SILL (ACOUSTIC)

SCALE: NTS

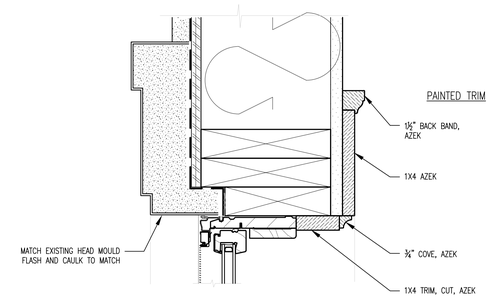

12 WINDOW HEAD

SCALE: NTS

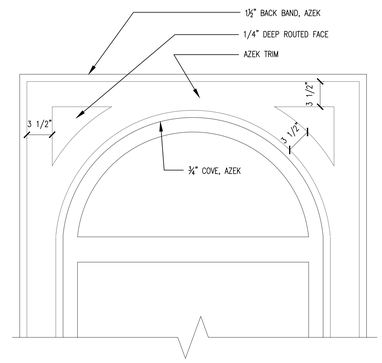

33 WINDOW HEAD DETAIL

SCALE: NTS

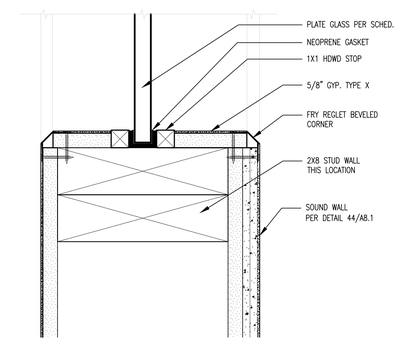

23 WINDOW JAMB/HEAD/SILL

SCALE: NTS

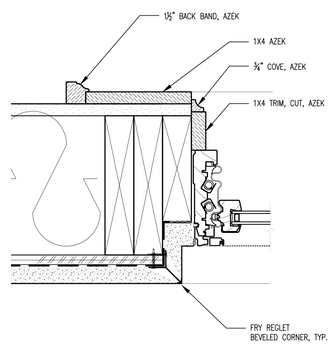

13 WINDOW JAMB

SCALE: NTS

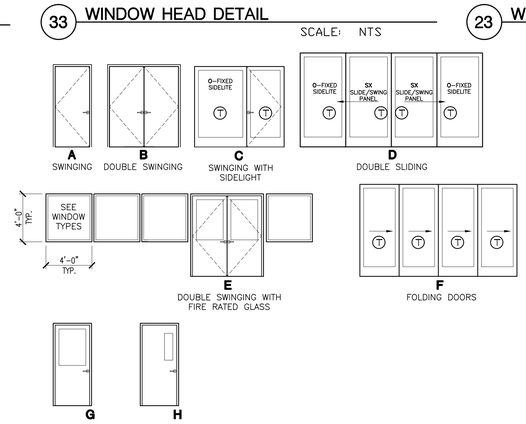

34 DOOR ELEVATIONS

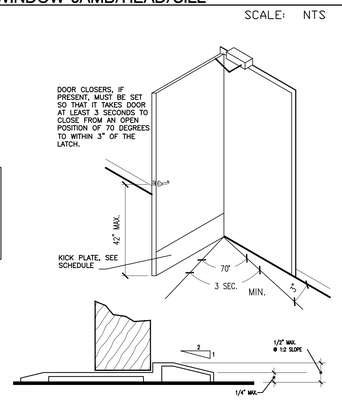

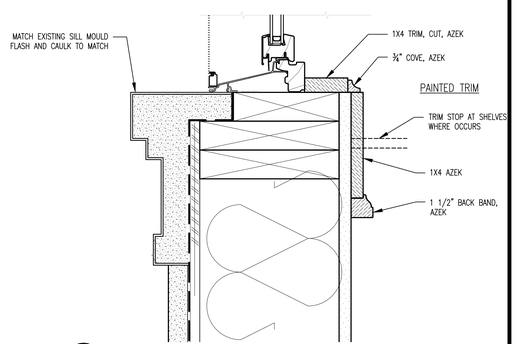

14 WINDOW SILL

SCALE: NTS

COUNTY OF SAN LUIS OBISPO
DEPARTMENT OF GENERAL SERVICES
1087 SANTA ROSA STREET
SAN LUIS OBISPO, CA 93408
PHONE 805.781.5200

ARCHITECTURE • INTERIORS
GREEN & VALUE ANALYSIS
MECHANICAL • ELECTRICAL
PLUMBING • FIRE
CIVIL
STRUCTURAL
SUSTAINABLE DESIGN
PROJECT MANAGEMENT
CONSTRUCTION MANAGEMENT
FAX: 805.786.4793 ext.5
805.928.2009 ext.
EMAIL: INFO@RAARCHITECTS.COM

RAYMATT MORELLI & ASSOCIATES, INC.
ARCHITECTURE ENGINEERING

REGISTERED ARCHITECT
GREGORY ALLEN RAWATT
LIC. NO. C20808
09/30/13
STATE OF CALIFORNIA

No.	Revision	Date
	ADDEND #1 REV4	12.21.12

County Facility:

ATASCADERO LIBRARY RENOVATION
6555 CAPISTRANO AVE.
ATASCADERO CA 93422

Project Manager: M. DEMARTINI
Checked By: MD
Client Approval:
Date: 08/20/2012

CONTRACTOR SHALL VERIFY ALL DIMENSIONS AND EXISTING CONDITIONS PRIOR TO COMMENCING WORK. REPORT ANY DISCREPANCIES TO COUNTY PROJECT COORDINATOR OR TO THE PROJECT ARCHITECT.

Project Title : ATASCADERO LIBRARY RENOVATION
6555 CAPISTRANO AVE.
ATASCADERO CA 93422

Sheet Title : DOOR AND WINDOW SCHEDULE AND DETAILS

Sheet Number
A7.3
of Sheets

PROJECT No. 417

FILE No.

BIDDING ADDENDUM #1 12-21-12

BID SET 03-26-13
BIDDING ADDENDUM #1 12-21-12
BID SET 03-26-13

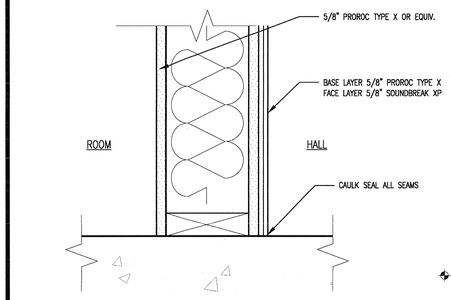

MIN. FIRE RATING: GA FILE NO. WP3660

51 1ST STORY 1-HOUR SOUNDWALL

SCALE: 3" = 1'-0"

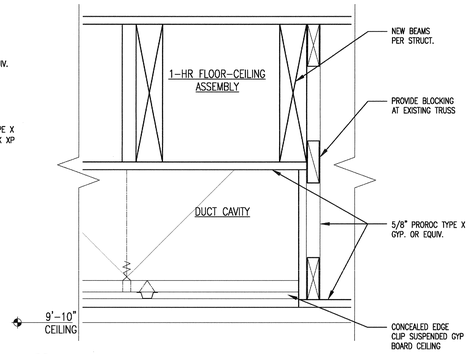

41 DUCT CAVITY

SCALE: 1 1/2" = 1'-0"

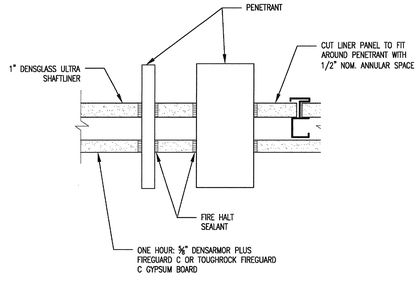

31 SHAFTWALL PENETRATION

SCALE: 3" = 1'-0"

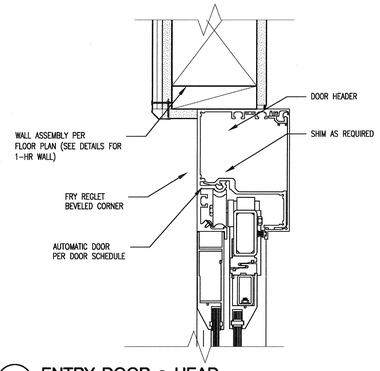

21 ENTRY DOOR @ HEAD

SCALE: 3" = 1'-0"

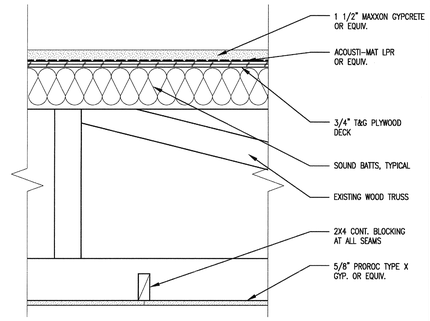

MIN. FIRE RATING: GA FILE NO. FC 5517

11 1-HOUR FLOOR DETAIL

SCALE: 1 1/2" = 1'-0"

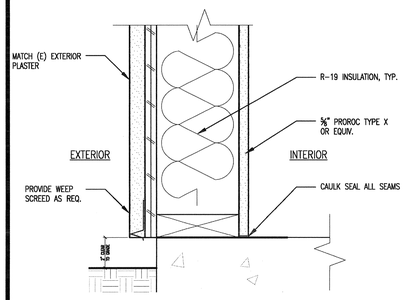

52 1ST STORY 1-HOUR PERIMETER WALL

SCALE: 3" = 1'-0"

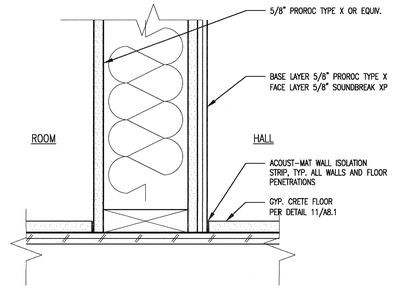

MIN. FIRE RATING: GA FILE NO. WP3660

42 2ND STORY 1-HOUR SOUNDWALL

SCALE: 3" = 1'-0"

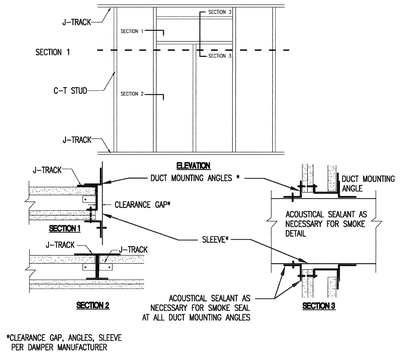

*CLEARANCE GAP, ANGLES, SLEEVE PER DAMPER MANUFACTURER

32 SHAFTWALL - DUCT PENETRATION

SCALE: 1" = 1'-0"

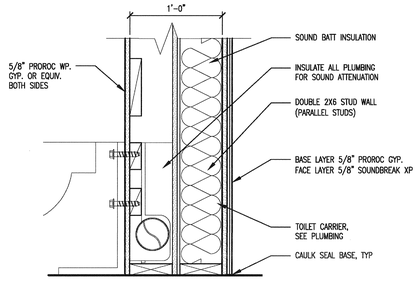

22 PLUMBING WALL SECTION

SCALE: 1 1/2" = 1'-0"

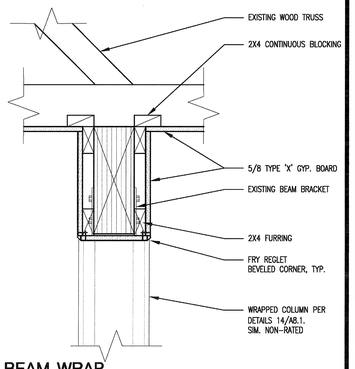

12 WOOD BEAM WRAP

SCALE: 1 1/2" = 1'-0"

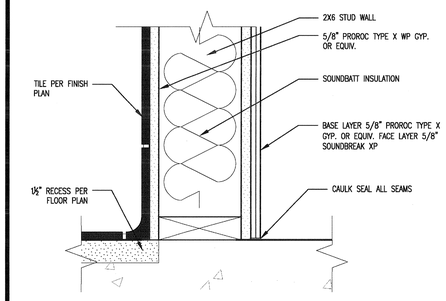

MIN. FIRE RATING: GA FILE NO. WP3660

53 1ST STORY RESTROOM WALL SECTION

SCALE: 3" = 1'-0"

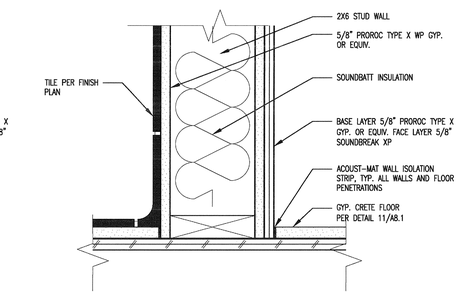

MIN. FIRE RATING: GA FILE NO. WP3660

43 2ND STORY RESTROOM WALL SECTION

SCALE: 3" = 1'-0"

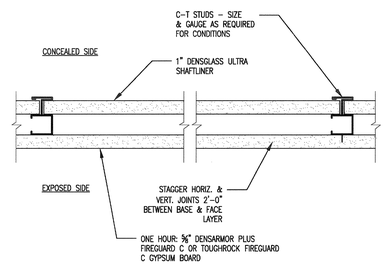

33 SHAFTWALL DETAIL

SCALE: 1 1/2" = 1'-0"

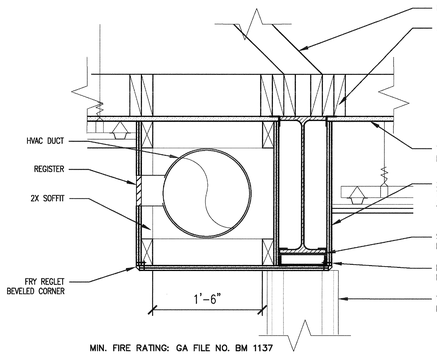

MIN. FIRE RATING: GA FILE NO. BM 1137

23 1-HOUR STEEL BEAM WRAP

SCALE: 1 1/2" = 1'-0"

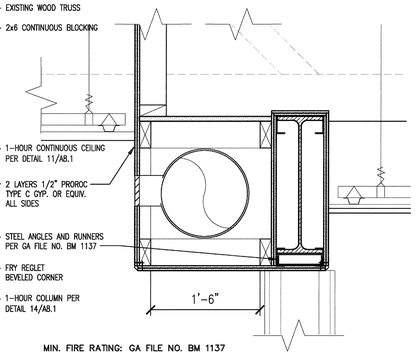

MIN. FIRE RATING: GA FILE NO. BM 1137

13 1-HOUR STEEL BEAM WRAP

SCALE: 1 1/2" = 1'-0"

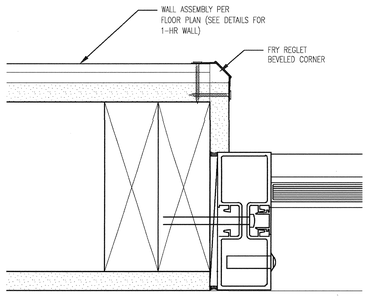

54 ENTRY DOOR JAMB

SCALE: 6" = 1'-0"

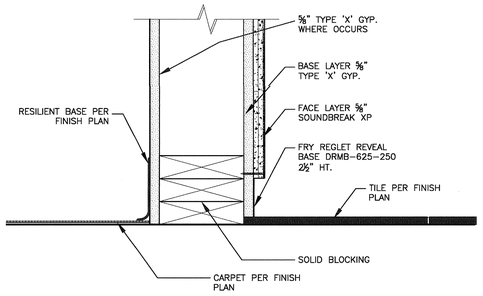

MIN. FIRE RATING: GA FILE NO. WP3660

44 1ST STORY 1-HR SOUNDWALL

SCALE: 3" = 1'-0"

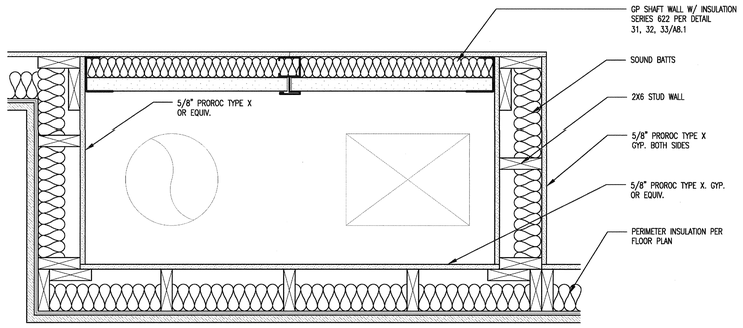

NOTE: FIRE SEAL ALL JOINTS

34 1-HOUR SHAFT SECTION

SCALE: 1-1/2" = 1'-0"

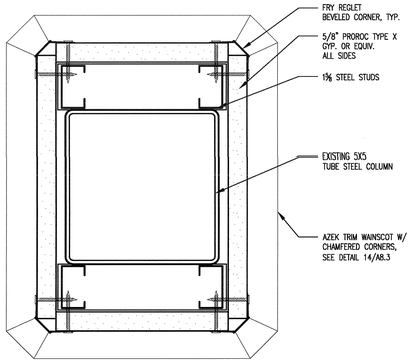

MIN. FIRE RATING: GA FILE NO. CM1851

NOTE: FIRE SEAL ALL JOINTS

14 1-HOUR FIRE COLUMN

SCALE: HALF SCALE

COUNTY OF SAN LUIS OBISPO
DEPARTMENT OF GENERAL SERVICES
1087 SANTA ROSA STREET
SAN LUIS OBISPO, CA 93408
PHONE 8057815200

RAVATT/ALBRECHT & ASSOCIATES, INC.
ARCHITECTURE ENGINEERING
ARCHITECTURE INTERIORS
GREGORY A. RAVATT, AIA
MECHANICAL ELECTRICAL
JIM ALBRECHT, PE
1171 PACIFIC STREET
SAN LUIS OBISPO CA 93401
PHONE: 805/786-4300 SLO
805/928-5000 SM
FAX: 805/786-4792 SLO
805/928-0593 SM
EMAIL@RICHARDANT-ALBRECHT.COM

REGISTERED ARCHITECT GREGORY ALLEN RAVATT LIC. NO. C-18806 12/31/13 STATE OF CALIFORNIA

No.	Revision	Date
	PLANCHECK REV1	9.26.12
	PLANCHECK REV2	10.24.12
	PLANCHECK REV3	11.19.12

County Facility:

ATASCADERO LIBRARY RENOVATION

6555 CAPISTRANO AVE.
ATASCADERO CA 93422

Project Manager: M. DEMARTINI
Checked By: MD
Client Approval:
Date: 08/20/2012

CONTRACTOR SHALL VERIFY ALL DIMENSIONS AND EXISTING CONDITIONS PRIOR TO COMMENCING WORK. REPORT ANY DISCREPANCIES TO COUNTY PROJECT COORDINATOR OR TO THE PROJECT ARCHITECT.

Project Title : ATASCADERO LIBRARY RENOVATION
6555 CAPISTRANO AVE. ATASCADERO CA 93422

Sheet Title : ARCHITECTURAL DETAILS

Sheet Number
A8.1
of Sheets

PROJECT No. 417

FILE No.

BIDDING SET 11-19-12

BIDDING SET 11-19-12

BID SET 03-26-13