	DRAWING VISIBLE FIELDS	FIELD - 1	FIELD - 2	FIELD - 3	FIELD - 4	FIELD - 5
SCADA SYSTEM OPERATOR INTERFACE TERMINAL	1 - TAG 2 - LOOP NUMBER 3 - FUNCTION 4 - DESCRIPTION 5 - DESCRIPTION	REFER 1 2	REFER 3	ACTION ALARM NUM - NUMERIC SP - SET POINT STATUS TREND	DESCRIPTION 2 5	DESCRIPTION
HARDWIRED I/O POINT	1 - TAG 2 - LOOP NUMBER 3 - FUNCTION 4 - DESCRIPTION 5 - LOCATION	REFER 1 2 4	REFER 3	AI - ANALOG INPUT AO - ANALOG OUTPUT DI - DISCRETE INPUT DO - DISCRETE OUTPUT HSC - HIGH SPEED COUNTER INPUT RTD - RTD INPUT	DESCRIPTION	PAC - PROGRAMABLE AUTOMATION CONTROLLER NO. PLC - PROGRAMABLE LOGIC CONTROLLER NO. RIO - REMOTE I/O VCP - VENDOR CONTROL PANEL NO.
DIGITAL BUS I/O REGISTER (FIELDBUS I/O)	1 - TAG 2 - LOOP NUMBER 3 - FUNCTION 4 - DESCRIPTION 5 - LOCATION	REFER 1 2	REFER 3	BUS ID CNET - CONTROLNET DNET - DEVICENET ENET - ETHERNET/IP FF - FOUNDATION FIELDBUS MB - MODBUS RTU MB+ - MODBUS PLUS MBTCP - MODBUS TCP DP - PROFIBUS DP PA - PROFIBUS PA PNET - PROFINET SERIAL - PROPRIETARY PROTOCOL	DESCRIPTION	PAC - PROGRAMABLE AUTOMATION CONTROLLER NO. PLC - PROGRAMABLE LOGIC CONTROLLER NO. RIO - REMOTE I/O VCP - VENDOR CONTROL PANEL NO.
HUMAN MACHINE INTERFACE	1 - TAG 2 - LOOP NUMBER 3 - FUNCTION 4 - DESCRIPTION 5 - LOCATION	REFER 1 2	REFER 3	ACTION ALARM NUM - NUMERIC SP - SET POINT STATUS	DESCRIPTION 2 5	HMI - HUMAN MACHINE INTERACE NO. LCP - LOCAL CONTROL PANEL NO. PCM - PROCESS CONTROL MODULE NO. VCP - VENDOR CONTROL PANEL NO.
PILOT DEVICE OPERATOR INTERFACE	1 - TAG 2 - LOOP NUMBER 3 - FUNCTION 4 - DESCRIPTION 5 - LOCATION	REFER 1 2	REFER 3	AM - AUTO/MANUAL BYPASS - BYPASS CL - CLOSE E-STOP - EMERGENCY STOP FRLR - FIXED RATE/LEVEL RATE HOA - HAND /OFF/AUTO JOHC - JOG OPEN/HOLD/CLOSE JOJC - JOG OPEN/JOG CLOSE LH - LOW/HIGH LOR - LOCAL/OFF/REMOTE LOS - LOCK OUT STOP LS - LEAD/STANDBY LSR - LOCAL/STOP/REMOTE NOOT - NO OFFLINE/OFFLINE TRANSITION OC - OPEN/CLOSE OLOL - ON LINE/OFF LINE OO - OFF/ON OP - OPEN OSC - OPEN/STOP/CLOSE RST - RESET SAAM - SEMI AUTO/AUTO/MANUAL SEL - SELECT SP - STOP SPD - SPEED SS - START/STOP ST - START	DESCRIPTION	LCP - LOCAL CONTROL PANEL NO. MCC - MOTOR CONTROL CENTER NO. PCM - PROCESS CONTROL MODULE NO. RVSS - REDUCED VOLTAGE SOLID STARTER NO. VCP - VENDOR CONTROL PANEL NO. VFD - VARIABLE FREQUENCY DRIVE NO.
POWER DEVICE PRIMARY FUNCTION OPERATOR ACCESSIBLE	1 - TAG 2 - LOOP NUMBER 3 - FUNCTION 4 - VOLTAGE/PHASE 5 - LOCATION	CB - CIRCUIT BREAKER DISC - DISCONNECT FU - FUSE	REFER 3	TM - THERMAL MAGNETIC CIRCUIT BREAKER	24VDC - 1P 120VAC - 1P 208VAC - 2P 208VAC - 3P 240VAC - 3P 240VAC - 2P 480VAC - 3P 2400VAC - 3P 4160VAC - 3P	DP - DISTRIBUTION PANEL NO. LCP - LOCAL CONTROL PANEL NO. LP - LIGHTING PANEL NO. MCC - MOTOR CONTROL CENTER NO. PCM - PROCESS CONTROL MODULE NO. PP - POWER PANEL NO. VCP - VENDOR CONTROL PANEL NO.
POWER DEVICE AUXILIARY FUNCTION FOR OPERATOR ACCESSIBLE DEVICES	1 - TAG 2 - LOOP NUMBER 3 - DESCRIPTION 4 - DESCRIPTION 5 - DESCRIPTION	DISC - DISCONNECT	REFER 3	DESCRIPTION	DESCRIPTION	DESCRIPTION
POWER DEVICE PRIMARY FUNCTION OPERATOR INACCESSIBLE	1 - TAG 2 - LOOP NUMBER 3 - FUNCTION 4 - VOLTAGE/PHASE 5 - LOCATION	CB - CIRCUIT BREAKER FU - FUSE	REFER 3	MCP - MOTOR CIRCUIT PROTECTOR SS - SOLID STATE CIRCUIT BREAKER TM - THERMAL MAGNETIC CIRCUIT BREAKER	24VDC - 1P 120VAC - 1P 208VAC - 2P 208VAC - 3P 240VAC - 2P 240VAC - 3P 480VAC - 3P 2400VAC - 3P 4160VAC - 3P	DP - DISTRIBUTION PANEL NO. LCP - LOCAL CONTROL PANEL NO. LP - LIGHTING PANEL NO. MCC - MOTOR CONTROL CENTER NO. PCM - PROCESS CONTROL MODULE NO. PP - POWER PANEL NO. VCP - VENDOR CONTROL PANEL NO.

	DRAWING VISIBLE FIELDS	FIELD - 1	FIELD - 2	FIELD - 3	FIELD - 4	FIELD - 5
POWER DEVICE AUXILIARY FUNCTION FOR OPERATOR INACCESSIBLE DEVICES	1 - TAG 2 - LOOP NUMBER 3 - DESCRIPTION 4 - DESCRIPTION 5 - DESCRIPTION	AUX - AUXILIARY INTERLOCK/CONTACT CPT - CONTROL POWER TRANSFORMER DISC - DISCONNECT OL - OVERLOAD RELAY	REFER 3	DESCRIPTION	DESCRIPTION	DESCRIPTION
INSTRUMENT PRIMARY ELEMENT	1 - TAG 2 - LOOP NUMBER 3 - FUNCTION 4 - FURNISHED BY 5 - LOCATION	REFER 1	REFER 3	DESCRIPTION 5	DESCRIPTION 6	AREA NO. BUILDING NO. ROOM NO.
INSTRUMENT/CONTROL ELEMENT PRIMARY FUNCTION OPERATOR ACCESSIBLE	1 - TAG 2 - LOOP NUMBER 3 - FUNCTION 4 - FURNISHED BY 5 - DESCRIPTION	REFER 1	REFER 3	DESCRIPTION 5	DESCRIPTION 6	DESCRIPTION
INSTRUMENT/CONTROL ELEMENT AUXILIARY FUNCTION OPERATOR ACCESSIBLE	1 - TAG 2 - LOOP NUMBER 3 - FUNCTION 4 - FURNISHED BY 5 - DESCRIPTION	REFER 1	REFER 3	DESCRIPTION	DESCRIPTION 6	DESCRIPTION
INSTRUMENT/CONTROL ELEMENT PRIMARY FUNCTION OPERATOR INACCESSIBLE	1 - TAG 2 - LOOP NUMBER 3 - FUNCTION 4 - FURNISHED BY 5 - LOCATION	REFER SWI - SWITCH ISOLATOR IB - INTRINSICALLY SAFE BARRIER XR - PROTECTION RELAY CR - CONTROL RELAY 1 IR - INTERPOSING RELAY PPR - PUMP PROTECTION RELAY	REFER 3	DESCRIPTION	DESCRIPTION 6	LCP - LOCAL CONTROL PANEL NO. MCC - MOTOR CONTROL CENTER NO. PCM - PROCESS CONTROL MODULE NO. VCP - VENDOR CONTROL PANEL NO.
INSTRUMENT/CONTROL ELEMENT AUXILIARY FUNCTION OPERATOR INACCESSIBLE	1 - TAG 2 - LOOP NUMBER 3 - FUNCTION 4 - FURNISHED BY 5 - LOCATION	REFER 1 XR - PROTECTION RELAY CR - CONTROL RELAY IR - INTERPOSING RELAY	REFER 3	DESCRIPTION	DESCRIPTION 6	LCP - LOCAL CONTROL PANEL NO. MCC - MOTOR CONTROL CENTER NO. PCM - PROCESS CONTROL MODULE NO. VCP - VENDOR CONTROL PANEL NO.
FIELD EQUIPMENT NON-POWERED	1 - TAG 2 - LOOP NUMBER 3 - FUNCTION/SIZE 4 - FURNISHED BY 5 - LOCATION	REFER 3	REFER 3	DESCRIPTION	DESCRIPTION 6	AREA NO. BUILDING NO. ROOM NO.
FIELD EQUIPMENT PRIMARY FUNCTION POWERED	1 - TAG 2 - LOOP NUMBER 3 - FUNCTION 4 - FURNISHED BY 5 - LOCATION	REFER 3	REFER 3	DESCRIPTION	DESCRIPTION 6	AREA NO. BUILDING NO. ROOM NO.
FIELD EQUIPMENT AUXILIARY FUNCTION POWERED	1 - TAG 2 - LOOP NUMBER 3 - FUNCTION 4 - FURNISHED BY 5 - DESCRIPTION	MWH - MOTOR WINDING HEATER TSH - TEMPERATURE SWITCH XSH - TORQUE SWITCH	REFER 3	DESCRIPTION	DESCRIPTION	DESCRIPTION
FIELD EQUIPMENT STARTER/DRIVE 1 - 2 3 4 5	1 - TAG 2 - LOOP NUMBER 3 - TYPE 4 - VOLTAGE/PHASE 5 - LOCATION	MS - MOTOR STARTER RVAT - REDUCED VOLTAGE AUTO TRANSFORMER STARTER RVSS - REDUCED VOLTAGE SOLID STATE STARTER VFD - VARIABLE FREQUENCY DRIVE	REFER 3	FVNR - FULL VOLTAGE NON-REVERSING STARTER FVR - FULL VOLTAGE REVERSING STARTER PWS - PART-WINDING STARTER RVAT - REDUCED VOLTAGE AUTO TRANSFORMER STARTER RVSS - REDUCED VOLTAGE SOLID STATE STARTER TS1W - TWO SPEED SINGLE WINDING TS2W - TWO SPEED TWO WINDINGS VFD - VARIABLE FREQUENCY DRIVE	120VAC - 1P 208VAC - 2P 208VAC - 3P 240VAC - 2P 240VAC - 3P 480VAC - 3P 2400VAC - 3P 4160VAC - 3P	LCP - LOCAL CONTROL PANEL NO. MCC - MOTOR CONTROL CENTER NO. PCM - PROCESS CONTROL MODULE NO. VCP - VENDOR CONTROL PANEL NO.

INSTRUMENT BUBBLE LOCATIONS

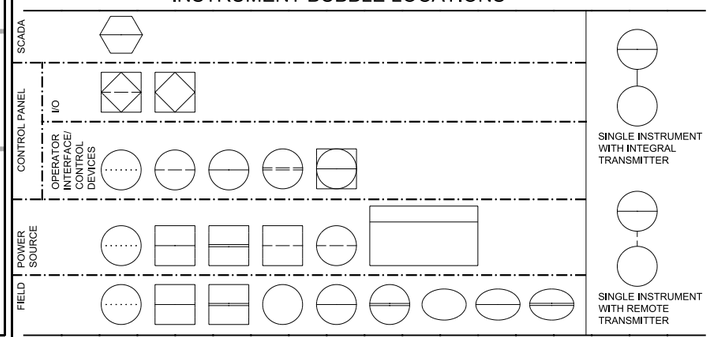

NOTES

1. INSTRUMENT TAG IDENTIFICATION LETTERS TABLE
2. OPERATOR PILOT DEVICE LEGEND
3. EQUIPMENT TAGGING TABLE
4. I/O TYPE DESIGNATIONS TABLE
5. INSTRUMENT TYPE DESIGNATIONS TABLE
6. FURNISHED BY:
   - FBBFS - FURNISHED BY BIOFILTER SUPPLIER
   - FBBS - FURNISHED BY BLOWER SUPPLIER
   - FBCVS - FURNISHED BY CONVEYOR SUPPLIER
   - FBFPS - FURNISHED BY FIRE PUMP SUPPLIER
   - FBHPTS - FURNISHED BY HYDRO PNEUMATIC TANK SUPPLIER
   - FBO - FURNISHED BY OWNER
   - FBPS - FURNISHED BY PUMP SUPPLIER
   - FBSPS - FURNISHED BY SCREW PRESS SUPPLIER
   - FBTFS - FURNISHED BY TERTIARY FILTER SUPPLIER
   - FBTS - FURNISHED BY TANK SUPPLIER
   - FBUVS - FURNISHED BY UV SYSTEM SUPPLIER
   - FBV - FURNISHED BY VENDOR
   - FBPV - FURNISHED BY POLYMER VENDOR

REV	DATE	BY	DESCRIPTION

DESIGNED CAG
DRAWN AD
CHECKED RAM
DATE SEPT 2013

REGISTERED PROFESSIONAL ENGINEER CARLO A. GROSSO No. 16851 ELECTRICAL STATE OF CALIFORNIA 9/16/2013

carollo®

SAN LUIS OBISPO COUNTY

SAN LUIS OBISPO COUNTY
LOS OSOS WATER RECYCLING FACILITY PROJECT
INSTRUMENTATION
SYMBOLS & ABBREVIATIONS - I

VERIFY SCALES
BAR IS ONE INCH ON ORIGINAL DRAWING
0 1"
IF NOT ONE INCH ON THIS SHEET, ADJUST SCALES ACCORDINGLY

JOB NO. 8930A.11
DRAWING NO. 00N01
SHEET NO. 388 OF 549

PROJECT NO. 8930A.11 FILE NAME: 8930A1100N001.dgn

Plot Date: 16-SEP-2013 6:04:51 PM
User: BRoepken
PlotScale: 2:1
DesignScript: Carollo_Std_Pen_v0905.pen
ColorTable: gshade.ctb
Model: Layout1
LAST SAVED BY: tmorabito

INSTRUMENT TAG IDENTIFICATION LETTERS

	MEASURED VARIABLE / INSTRUMENT FUNCTION	ELEMENT	TRANSMITTER	INDICATING TRANSMITTER	CONVERTER TRANSDUCER, RELAY SPECIAL DEVICES	INDICATOR	RECORDER	CONTROLLER	INDICATING CONTROLLER	RECORDING CONTROLLER	SWITCH	SWITCH LOW LOW	SWITCH LOW	SWITCH HIGH	SWITCH HIGH HIGH	SWITCH COMBINATION HIGH LOW	ACTION	ALARM LOW LOW	ALARM LOW	ALARM HIGH	ALARM HIGH HIGH	TOTALIZE INDICATOR TRANSMITTER	VALVE	GAUGE	LIGHT	SPEED SETTING
A	ANALYSIS	AE	AT	AIT	AY	AI	AR	AC	AIC	ARC	AS	ASLL	ASL	ASH	ASHH	ASHL		AALL	AAL	AAH	AAHH				AL	
B	BURNER FLAME	BE	BT	BIT	BY	BI	BR	BC	BIC	BRC	BS	BSLL	BSL	BSH	BSHH			BALL	BAL	BAH	BAHH				BL	
C	CONDUCTIVITY	CE	CT	CIT	CY	CI	CR	CC	CIC	CRC	CS	CSLL	CSL	CSH	CSHH	CSHL		CALL	CAL	CAH	CAHH				CL	
D	DENSITY	DE	DT	DIT	DY	DI	DR	DC	DIC	DRC	DS	DSLL	DSL	DSH	DSHH	DSHL		DALL	DAL	DAH	DAHH				DL	
E																										
F	FLOW	FE	FT	FIT	FY	FI	FR	FC	FIC	FRC	FS	FSLL	FSL	FSH	FSHH	FSHL		FALL	FAL	FAH	FAHH	FQI	FCV	FG	FL	
FF	FLOW RATIO				FFY	FFI		FFC	FFIC		FFS														FFL	
G	GAUGING (DIMENSION)																									
H	HAND (MANUAL)*							HC			HS*						HA*						HV		HL	HSS
I	CURRENT		IT	IIT	IY	II	IR	IC	IIC	IRC	IS	ISLL	ISL	ISH	ISHH			IALL	IAL	IAH	IAHH				IL	
J	POWER																									
K	TIME				KY	KI	KR	KC	KIC	KRC	KS	KSLL	KSL	KSH	KSHH			KALL	KAL	KAH	KAHH		KV		KL	
L	LEVEL	LE	LT	LIT	LY	LI	LR	LC	LIC	LRC	LS	LSLL	LSL	LSH	LSHH	LSHL		LALL	LAL	LAH	LAHH		LCV	LG	LL	
M	MOISTURE OR HUMIDITY	ME	MT	MIT	MY	MI	MR	MC	MIC	MRC	MS	MSLL	MSL	MSH	MSHH			MALL	MAL	MAH	MAHH				ML	
N	EMERGENCY SHUTDOWN																									
O																										
P	PRESSURE OR VACUUM	PE	PT	PIT	PY	PI***	PR	PC	PIC	PRC	PS****	PSLL	PSL	PSH	PSHH	PSHL		PALL	PAL	PAH	PAHH		PCV		PL	
PD	DIFFERENTIAL PRESSURE		PDT	PDIT	PDY	PDI	PDR	PDC	PDIC	PDRC	PDS	PDSLL	PDSL	PDSH	PDSHH			PDALL	PDAL	PDAH	PDAHH		PDCV		PDL	
Q	QUANTITY	QE	QT	QIT	QY	QI	QR				QS	QSLL	QSL	QSH	QSHH			QALL	QAL	QAH	QAHH					
R	RADIOACTIVITY																									
S	SPEED	SE	ST	SIT	SY	SI	SR	SC	SIC	SRC	SS	SSLL	SSL	SSH	SSHH			SALL	SAL	SAH	SAHH					
T	TEMPERATURE	TE	TT	TIT	TY	TI	TR	TC	TIC	TRC	TS	TSLL	TSL	TSH	TSHH	TSHL		TALL	TAL	TAH	TAHH		TCV		TL	
TD	DIFFERENTIAL TEMPERATURE		TDT	TDIT	TDY	TDI	TDR	TDC	TDIC	TDRC	TDS	TDSLL	TDSL	TDSH	TDSHH			TDALL	TDAL	TDAH	TDAHH		TDCV		TDL	
U	MULTIVARIABLE					UI	UR	UC	UIC	URC	US														UL	
V	VISCOSITY	VE	VT	VIT	VY	VI	VR	VC	VIC	VRC	VS	VSLL	VSL	VSH	VSHH			VALL	VAL	VAH	VAHH				VL	
W	WEIGHT	WE	WT	WIT	WY	WI	WR				WS	WSLL	WSL	WSH	WSHH			WALL	WAL	WAH	WAHH					
X	UNCLASSIFIED	XE	XT	XIT	XY	XI	XR	XC	XIC	XRC	XS	XSLL	XSL	XSH	XSHH			XALL	XAL	XAH	XAHH		XCV	XG	XL	
XV	VIBRATION	XVE	XVT		XVY	XVI	XVR				XVS			XVSH	XVSHH					XVAH	XVAHH				XVL	
Y	STATUS***					YI***																			YL	
Z	POSITION	ZE	ZT	ZIT	ZY	ZI					ZS**												ZV		ZL**	

* REFER TO OPERATOR PILOT DEVICE LEGEND
** LETTER INDICATES POSITION (O=OPEN, C=CLOSED, R=RAISE, L=LOWER, ETC)
*** PI# # = 1,2,3 ETC. AND REPRESENTS A UNIQUE IDENTIFIER AND IS APPLICABLE TO ALL ITEMS IN THE TABLE ABOVE
**** COULD ALSO BE PIS - FOR PRESSURE INDICATING SWITCH

OPERATOR PILOT DEVICE LEGEND

	DEVICE TYPE / PILOT DEVICE FUNCTION	LOCAL-OFF-REMOTE (LOR)	STOP (SP)	START (ST)	HAND-OFF-AUTO (HOA)	OFF-ON (OO)	SELLECT (SEL)	OPEN-STOP-CLOSE (OSC)	JOG OPEN+HOLD-CLOSE (JOHC)	SEMIAUTO-AUTO-MANUAL (SAAM)	LEAD-STANDBY (LS)	JOG OPEN-JOG CLOSE (JOJC)	ONLINE-OFFLINE (OLOL)	AUTO-MANUAL (AM)	FIXED RATE-LEVEL RATE (FRLR)	OPEN-CLOSE (OC)	NO OFFLINE-OFFLINE TRANSITION (NOOT)	LOW-HIGH (LH)	RESET (RST)	SPEED (SPD)	START-STOP (SS)	LOCAL-STOP-REMOTE (LSR)	BYPASS	LEAD / LAG	E-STOP	SELECTION	POSITION (POS)(POT)
	PILOT DEVICE TAG (HAND SWITCHES)	HSA*	HSB	HSC	HSD	HSE	HSF	HSG	HSH	HSI	HSJ	HSK	HSL	HSM	HSN	HSO	HSP	HSQ	HSR	HSS	HST	HSU	HSV	HSW	HSX	HSY	HSZ
	SCADA/HMI TAG (HAND ACTION)	HAA	HAB	HAC	HAD	HAE	HAF	HAG	HAH	HAI	HAJ	HAK	HAL	HAM	HAN	HAO	HAP	HAQ	HAR	HAS	HAT	HAU	HAV	HAW	HAX	HAY	HAZ

* HSA# # = 1, 2, 3 ETC. AND REPRESENTS A UNIQUE IDENTIFIER

I/O TYPE DESIGNATIONS

AUX1	RUNNING	MSC	VALVE CLOSE
AUX2	FAILED/FAULT/OVERLOAD	MSF	MOTOR START FORWARD
AUXF1	RUNNING FORWARD	MSH	MOTOR START HIGH
AUXH1	RUNNING HIGH	MSL	MOTOR START LOW
AUXL1	RUNNING LOW	MSM	VALVE MODULATE
AUXR1	RUNNING REVERSE	MSO	VALVE OPEN
AUX3	RUN LATCH	MSP	MOTOR STOP
SVC	SOLENOID VALVE CLOSE	MSR	MOTOR START REVERSE
SVO	SOLENOID VALVE OPEN	MST	MOTOR START
MS	RUN	SS	SPEED SIGNAL

INSTRUMENT TYPE DESIGNATIONS

AM	AMMONIA	O3	OZONE	SC	STREAMING CURRENT
CAP	CAPACITANCE	ORP	OXIDATION REDUCTION POTENTIAL	SH	SODIUM HYPOCHLORITE
CG	COMBUSTIBLE GAS	P	PRESSURE	TDR	TIME DOMAIN REFLECTOMETRY
CL	CHLORINE	P-SUB	PRESSURE SUBMERSIBLE	TH	THERMAL
COND	CONDUCTIVITY	PC	PARTICLE COUNTER	TSS	TOTAL SUSPENDED SOLIDS
DO	DISSOLVED OXYGEN	PO	PHOSPHOROUS	TURB	TURBIDITY
FMCW	FREQ. MODULATED CONT. WAVE	PTOF	PULSE TIME OF FLIGHT	US	ULTRASONIC
HSF	FLUORIDE	R/I	RESISTANCE TO CURRENT	UVI	UV INTENSITY
IS	INTRINSIC SAFETY BARRIER	ROT	ROTAMETER	UVT	UV TRANSMITTANCE
LEL	LOWER EXPLOSIVE LIMIT	RTD	RESISTANCE TEMP DETECTOR	VAC	VACUUM
MAG	MAGNETIC				

SPECIFIC ABBREVIATIONS

APH	A PHASE	HTU	HEAT TRACE UNIT
BPH	B PHASE	MS	MAGNETIC MOTOR STARTER
BRB	BEARING BOTTOM	MWH	MOTOR WINDING HEATER
BRT	BEARING TOP	SSG	SECONDARY SWITCHGEAR
BTFLY	BUTTERFLY	SV*	SOLENOID VALVE
CPH	C PHASE	SPD	SURGE PROTECTIVE DEVICE
CC*	CALIBRATION COLUMN * = 1, 2, 3, ETC.	UPS	UNINTERRUPTIBLE POWER SUPPLY
HTR	HEATER	YR	STATUS REMOTE
		Y1	STATUS RUNNING
		Y2	ALARM FAILED/FAULT

* CC# AND SV# # = 1, 2, 3 ETC. AND REPRESENTS A UNIQUE IDENTIFIER

INSTRUMENT LINE SYMBOLS

INSTRUMENT OR CONNECTION TO PROCESS
PNEUMATIC SYMBOL
ELECTRIC SYMBOL
HYDRAULIC SYMBOL — L — L
CAPILLARY TUBE — X — X — X
ELECTROMAGNETIC OR SONIC SIGNAL (GUIDED)
ELECTROMAGNETIC OR SONIC SIGNAL (NOT GUIDED)
SYSTEM LINK (SOFTWARE OR DATA LINK) — o — o —
COPPER ETHERNET — C — C —
FIBER OPTIC ETHERNET — F — F —
WIRELESS ETHERNET — W — W —
PROFIBUS DP — PBD — PBD —
PROFIBUS PA — PBA — PBA —
DEVICENET — DN — DN —
FOUNDATION FIELDBUS — FF — FF —
DH-485 — DH — DH —

PROCESS LINE SYMBOLS

PRIMARY PROCESS FLOW IN PIPE
SECONDARY PROCESS FLOW IN PIPE
PRIMARY PROCESS FLOW IN CHANNEL
SECONDARY PROCESS FLOW IN CHANNEL

DESIGNATIONS

FUTURE
OR
FUTURE
EQUIPMENT ENCLOSURE
EXISTING
OR
EXISTING
ADDITION OR NEW THIS CONSTRUCTION

MISCELLANEOUS P&ID SYMBOLS

CHEMICAL INJECTION POINT — CHEMICAL / SHEET NO.
PIPE CALLOUT — PIPE SIZE
UNIQUE IDENTIFIER — A
CONTINUATION FROM SHEET — B
CONTINUATION TO SHEET — C
CONTINUATION TAG

REV	DATE	BY	DESCRIPTION

DESIGNED CAG
DRAWN AD
CHECKED RAM
DATE SEPT 2013

REGISTERED PROFESSIONAL ENGINEER — CARLO A. GROSSO — No. 18851 — ELECTRICAL — STATE OF CALIFORNIA — 9/16/2013

carollo

SAN LUIS OBISPO COUNTY

SAN LUIS OBISPO COUNTY
LOS OSOS WATER RECYCLING FACILITY PROJECT
INSTRUMENTATION
SYMBOLS & ABBREVIATIONS - II

VERIFY SCALES
BAR IS ONE INCH ON ORIGINAL DRAWING
0 — 1"
IF NOT ONE INCH ON THIS SHEET, ADJUST SCALES ACCORDINGLY

JOB NO. 8930A.11
DRAWING NO. 00N02
SHEET NO. 389 OF 549

Plot Date: 16-SEP-2013 6:05:48 PM
User: BRoepken
PlotScale: 2:1
DesignScript: Carollo_Std_Pen_v0905.pen
ColorTable: gshade.ctb
Model: Layout1
LAST SAVED BY: crollins

ACTUATORS

- DIAPHRAGM
- ELECTRIC DISCRETE
- ELECTRIC MODULATING
- ELECTRIC HYDRAULIC
- HAND
- HYDRAULIC
- PNEUMATIC
- SOLENOID

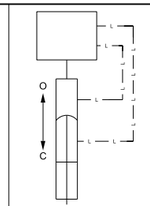

HYDRAULIC MODULATING

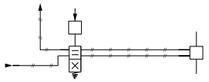

PNEUMATIC SINGLE SOLENOID OPEN/CLOSE

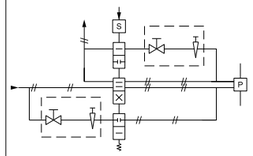

PNEUMATIC SINGLE SOLENOID w/ SPEED CONTROL

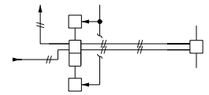

PNEUMATIC DUAL SOLENOID OPEN/CLOSE

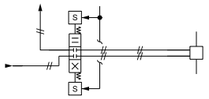

PNEUMATIC DUAL SOLENOID OPEN/HOLD/CLOSE

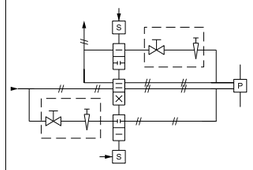

PNEUMATIC DUAL SOLENOID OPEN/CLOSE w/ SPEED CONTROL

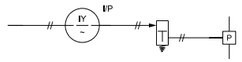

PNEUMATIC MODULATING

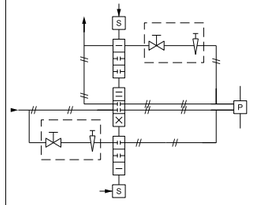

PNEUMATIC MODULATING OPEN/CLOSE w/ SPEED CONTROL

PIPING

- AIR GAP
- BLIND FLANGE
- CAPPED OR PLUGGED
- CONCENTRIC INCREASER
- CONCENTRIC REDUCER
- DRAIN
- ECCENTRIC INCREASER
- ECCENTRIC REDUCER
- EXPANSION COUPLING
- EXPANSION JOINT VIBRATION CENTER
- FLEXIBLE CONNECTION
- QUICK DISCONNECT
- UNION

PUMPS

- AIR DRIVEN
- CENTRIFUGAL
- CHEMICAL FEED DIAPHRAM
- DIAPHRAGM
- GEAR
- PERISTALTIC OR HOSE
- PISTON
- PROGRESSIVE CAVITY
- SUBMERSIBLE
- VERTICAL TURBINE
- VERTICAL CHOPPER
- WATER CHAMP

BLOWERS/COMPRESSORS

- CENTRIFUGAL SINGLE STAGE BLOWER
- CENTRIFUGAL MULTI STAGE BLOWER
- RECIPROCATING COMPRESSOR
- SCREW COMPRESSOR
- FAN
- LIQUID RING COMPRESSOR
- ROTARY LOBE BLOWER

CHECK VALVES

- BACK FLOW PREVENTOR
- BALL
- DIAPHRAGM CHECK
- DOUBLE FLAP
- FLAPPER
- SPRING LOADED GENERAL
- SPRING LOADED SWING
- SWING

PRESSURE VALVES

- BACKPRESSURE REGULATING SELF CONTAINED
- BACKPRESSURE REGULATING EXTERNAL TAP
- PRESSURE REDUCING SELF CONTAINED
- PRESSURE REDUCING EXTERNAL PRESSURE TAP
- REGULATING
- PRESSURE RELIEF
- VACUUM RELIEF

VALVES

- 3-WAY
- 3-WAY PLUG
- 4-WAY
- AIR-RELIEF
- ANGLE
- BALL
- BALL V-NOTCH
- BUTTERFLY
- BUTTERFLY- BURIED VALVE BOX
- CONE
- DIAPHRAGM
- GATE
- GATE- BURIED VALVE BOX
- GLOBE
- HOSE
- MUD
- NEEDLE
- PINCH
- PLUG ECCENTRIC
- PLUG ECCENTRIC w-VALVE BOX
- PLUG ECCENTRIC LUBRICATED
- PLUG ECCENTRIC LUBRICATED BURIED VALVE BOX
- PLUG CONCENTRIC
- PLUG CONCENTRIC -BURIED VALVE BOX
- PLUG CONCENTRIC LUBRICATED
- PLUG CONCENTRIC LUBRICATED BURIED VALVE BOX
- PUMP DISCHARGE
- TELESCOPING

VALVE DESIGNATIONS	
NO	NORMALLY OPEN
NC	NORMALLY CLOSED
FO	FAIL OPEN
FC	FAIL CLOSE
FLP	FAIL LAST POSITION

MISC

- AIR DAMPER
- AIR/CHEMICAL DIFFUSER
- ANNULAR SEAL
- BASKET STRAINER
- BLOW-OFF SILENCER
- CALIBRATION COLUMN
- COALESCER
- DESICCANT DRYER
- DIAPHRAGM SEAL
- EDUCTOR/EJECTOR
- EYEWASH
- EXHAUST FAN
- FILTER
- FILTER SEPARATOR
- FINE FILTER
- FIRE ALARM/SENSOR
- FLAME ARRESTER
- FLAME ARRESTER w/THERMALLY OPERATED VALVE
- FLOW CONDITIONER
- GAS CANNON
- GRINDER
- HEAT EXCHANGER
- HOIST
- HORIZONTAL MIXER
- HOSE CONNECTION
- INLET STRAINER
- INLINE STATIC MIXER
- MATERIAL CHANGE
- MIXER
- MOTOR
- NOZZLE
- ORIFICE RESTRICTION
- PERISTALTIC COMPOSITE SAMPLER
- OR PULSATION DAMPENER
- REFRIGERATED DRYER
- RUPTURE DISK
- SAMPLE PORT
- SANITARY SEAL
- SIGHT TUBE
- SMOKE DETECTOR
- STRAINER - MECHANICALLY CLEANED
- STRAINER WITH BLOW OFF
- STRAINER WYE TYPE
- VAPOR HEATER
- VAPORIZER
- VENT TO ATMOSPHERE

REV	DATE	BY	DESCRIPTION

DESIGNED CAG
DRAWN AD
CHECKED RAM
DATE SEPT 2013

REGISTERED PROFESSIONAL ENGINEER CARLO A. GROSSO No. 18851 ELECTRICAL STATE OF CALIFORNIA 9/16/2013

carollo

SAN LUIS OBISPO COUNTY

SAN LUIS OBISPO COUNTY
LOS OSOS WATER RECYCLING FACILITY PROJECT
INSTRUMENTATION
SYMBOLS & ABBREVIATIONS - III

VERIFY SCALES
BAR IS ONE INCH ON ORIGINAL DRAWING
0 1"
IF NOT ONE INCH ON THIS SHEET, ADJUST SCALES ACCORDINGLY

JOB NO. 8930A.11
DRAWING NO. 00N03
SHEET NO. 390 OF 549

PROJECT NO. 8930A.11 FILE NAME: 8930A1100N003.dgn

Plot Date: 16-SEP-2013 6:06:05 PM
User: BRoepken
PlotScale: 2:1
DesignScript: Carollo_Std_Pen_v0905.pen
ColorTable: gshade.ctb
Model: Layout1
LAST SAVED BY: crollins

GATES

SIDE VIEW	PLAN VIEW
SLIDE	FLAP
SLUICE	KNIFE
STOP	SLIDE
	SLUICE
	STOP
	WEIR

FLUMES

- LEOPOLD-LAGCO
- PALMER-BOWLUS
- PARSHALL
- REGULAR CUTTHROAT
- TRAPEZOIDAL

FLOW

- BATCH
- CORIOLIS
- MAGNETIC
- ORIFICE
- PADDLE WHEEL
- PITOT TUBE AVERAGING
- PITOT TUBE/ ANNUBAR
- POSITIVE-DISPLACEMENT
- PROPELLER-TURBINE
- ROTAMETER
- THERMAL
- ULTRASONIC DOPPLER
- ULTRA-SONIC TRANSIT TIME
- V-CONE
- VENTURI TUBE OR FLOW NOZZLE
- VORTEX

LEVEL

- BUBBLER
- CAPACITANCE
- DIFFERENTIAL PRESSURE (TANK)
- ELECTRODE
- FLOAT
- INVERTED COLUMN
- RADAR PTOF
- RADAR TDR
- SUSPENDED/ SUBMERSIBLE
- ULTRASONIC

TEMPERATURE

- TEMPERATURE w/THERMOWELL
- THERMAL BIMETALLIC
- THERMOMETER

WEIRS

- RECTANGULAR w/o END CONTRACTIONS
- RECTANGULAR w/ END CONTRACTIONS
- V-NOTCH (TRIANGULAR)
- TRAPEZOIDAL (CIPOLLETTI)

PRESSURE/ VACUUM

- DIFFERENTIAL
- GAUGE
- GAUGE DIFFERENTIAL
- LINE MOUNTED
- MANOMETER
- PRESSURE LEAD LINE
- PRESSURE SWITCH

WEIGHT

- HYDRAULIC
- STRAIN GAUGE

REV	DATE	BY	DESCRIPTION

DESIGNED CAG
DRAWN AD
CHECKED RAM
DATE SEPT 2013

REGISTERED PROFESSIONAL ENGINEER CARLO A. GROSSO No. 16851 ELECTRICAL STATE OF CALIFORNIA 9/16/2013

carollo

SAN LUIS OBISPO COUNTY

SAN LUIS OBISPO COUNTY
LOS OSOS WATER RECYCLING FACILITY PROJECT
INSTRUMENTATION
SYMBOLS & ABBREVIATIONS - IV

VERIFY SCALES
BAR IS ONE INCH ON ORIGINAL DRAWING
0 1"
IF NOT ONE INCH ON THIS SHEET, ADJUST SCALES ACCORDINGLY

JOB NO. 8930A.11
DRAWING NO. 00N04
SHEET NO. 391 OF 549

PROJECT NO. 8930A.11 FILE NAME: 8930A1100N004.dgn

PROCESS SWITCHES

- FLOAT SWITCH — CLOSE ON RISING LEVEL
- FLOAT SWITCH — OPEN ON RISING LEVEL
- PRESSURE SWITCH — CLOSE ON RISING PRESSURE
- PRESSURE SWITCH — OPEN ON RISING PRESSURE
- TEMPERATURE SWITCH — CLOSE ON RISING TEMPERATURE
- TEMPERATURE SWITCH — OPEN ON RISING TEMPERATURE
- FLOW SWITCH — CLOSE ON INCREASE IN FLOW
- FLOW SWITCH — OPEN ON INCREASE IN FLOW
- VIBRATION SWITCH — OPEN ON RISING VIBRATION
- VIBRATION SWITCH — CLOSE ON RISING VIBRATION
- TORQUE SWITCH — OPEN ON HIGH TORQUE
- TORQUE SWITCH — CLOSE ON HIGH TORQUE
- NORMALLY CLOSED — LIMIT SWITCH
- NORMALLY CLOSED — HELD OPEN LIMIT SWITCH
- NORMALLY OPEN — LIMIT SWITCH
- NORMALLY OPEN — HELD CLOSED LIMIT SWITCH

HAND SWITCHES

- NORMALLY OPEN — MOMENTARY PUSHBUTTON
- NORMALLY CLOSED — MOMENTARY PUSHBUTTON
- THREE POSITION SELECTOR SWITCH (xoo) — x - DENOTES POSITION CONTACTS CLOSED IN
- TWO POSITION SELECTOR SWITCH (xo) — x - DENOTES POSITION CONTACTS CLOSED IN
- MUSHROOM HEAD PUSHBUTTON
- PUSH-PULL PUSHBUTTON — MAINTAINED CONTACT
- PADLOCK SWITCH (xox) — x - DENOTES POSITION CONTACTS CLOSED IN
- PULL CORD SWITCH
- STOP-LOCKOUT PUSHBUTTON
- SPRING-RETURN (xoo) — x - DENOTES POSITION CONTACTS CLOSED IN

PILOT LIGHTS

- PILOT LIGHT — a = LENS COLOR
  - R = RED
  - G = GREEN
  - W = WHITE
  - A = AMBER

RELAYS

- RELAY COIL — a = TYPE
  - CR - CONTROL RELAY
  - TD - TIME DELAY RELAY
  - M - MOTOR STARTER COIL
  - L - MOTOR STARTER COIL - LOW SPEED
  - H - MOTOR STARTER COIL - HIGH SPEED
  - F - MOTOR STARTER COIL - FORWARD
  - R - MOTOR STARTER COIL - REVERSE
- b = TDON - TIME DELAY ON ENERGIZATION; TDOFF - TIME DELAY ON DEENERGIZATION
- c = TIMING RANGE/SETTING
- d = DESCRIPTION
- NORMALLY OPEN — CONTROL CONTACT
- NORMALLY CLOSED — CONTROL CONTACT
- NOTC — TIME DELAY SWITCH — NORMALLY OPEN — TIMED CLOSING
- NCTO — TIME DELAY SWITCH — NORMALLY CLOSED — TIMED OPENING
- NOTO — TIME DELAY SWITCH — NORMALLY OPEN — TIMED OPENING
- NCTC — TIME DELAY SWITCH — NORMALLY CLOSED — TIMED CLOSING

TERMINAL BLOCKS

- TERMINAL — IN PLC/PCM PANEL
- TERMINAL — IN MOTOR CONTROL CENTER
- TERMINAL — IN LOCAL STARTER CONTROL PANEL
- TERMINAL — AT FIELD DEVICE
- TERMINAL — IN RTU
- TERMINAL — IN FIELD PANEL
- TERMINAL IN INTRINSICALLY SAFE RELAY PANEL
- DIGITAL BUS CONNECTOR
  - * = D - DEVICENET
  - * = PA - PROFIBUS PA
  - * = DP - PROFIBUS DP
  - * = H1 - FOUNDATION FIELDBUS H1
  - * = H2 - FOUNDATION FIELDBUS H2

I/O

- PLC DISCRETE — a = INPUT OR OUTPUT AS INDICATED
- PLC ANALOG — a = INPUT OR OUTPUT AS INDICATED
- DIGITAL BUS

MISC

- SOLENOID
- METER UNIT — M = TYPE
- MOTOR
- CIRCUIT BREAKER
- DISCONNECT
- FUSE
- TRANSIENT SURGE PROTECTION
- MOTOR WINDING HEATER — * - MOTOR TAG I.D.
- SPACE HEATER
- VARISTOR
- CAPACITOR
- RESISTOR
- BATTERY
- DIODE
- MOTOR OVERLOAD HEATERS
- OVERLOAD CONTACT
- DRAWOUT CONNECTION
- GROUND
- LIGHTNING ARRESTOR
- CONTROL POWER TRANSFORMER (H1, H3, H2, H4, X1, X2)
- ELAPSED TIME METER

REV	DATE	BY	DESCRIPTION

DESIGNED CAG
DRAWN AD
CHECKED RAM
DATE SEPT 2013

REGISTERED PROFESSIONAL ENGINEER — CARLO A. GROSSO — No. 16851 — ELECTRICAL — STATE OF CALIFORNIA — 9/16/2013

carollo

SAN LUIS OBISPO COUNTY

SAN LUIS OBISPO COUNTY

LOS OSOS WATER RECYCLING FACILITY PROJECT

INSTRUMENTATION

SCHEMATIC SYMBOLS

VERIFY SCALES
BAR IS ONE INCH ON ORIGINAL DRAWING
0 1"
IF NOT ONE INCH ON THIS SHEET, ADJUST SCALES ACCORDINGLY

JOB NO. 8930A.11
DRAWING NO. 00N05
SHEET NO. 392 OF 549

PROJECT NO. 8930A.11 FILE NAME: 8930A1100N005.dgn

Plot Date: 16-SEP-2013 6:06:23 PM
User: BRoepken
PlotScale: 2:1
DesignScript: Carollo_Std_Pen_v0905.pen
ColorTable: gshade.ctb
Model: Layout1
LAST SAVED BY: crollins

EQUIPMENT

EXAMPLE: 22-PMP-121 RAS/WAS PUMP

AA - BBB - CCC

FACILITY INDEX	
02	STORM WATER RETENTION POND
03	REW STORAGE PONDS
04	PLANT DRAIN PUMP STATION
04	STORM WATER PUMP STATION
05	ADMINISTRATION BUILDING
06	MAINTENANCE BUILDING
10	HEADWORKS/SEPTAGE RECEIVING
11	ODOR CONTROL FACILITY
20	OXIDATION DITCH
21	SECONDARY CLARIFIERS
23	SCUM PUMP STATION
28	FILTER INFLUENT PUMP STATION
29	FLOCCULATION BASIN (FUTURE)
30	TERTIARY FILTERS
31	UV FACILITY
32	CHEMICAL FACILITY
40	EFFLUENT PUMP STATION
50	SOLIDS STORAGE TANKS, RAS/WAS PUMP STATION
51	DEWATERING BUILDING
52	SCUM DRYING BED
60	WATER STORAGE TANK
70	ELECTRICAL BUILDING
80	LANDSCAPING

EQUIPMENT TAG DESCRIPTOR	
AER	AERator
ARF	AiR Filter
ARR	ARRestor
AUG	AUGer
AVR	Air Vacuum Relief
BAS	BASin
BFP	Belt Filter Press
BIT	BIo Tower
BLO	BLOwer
BOI	BOIler
CAL	CALibration column
CFD	Centrifuge
CHI	CHIller
CLR	CLaRifier
CMP	screenings CoMPactor
CNV	CoNVeyor
COA	COAlescer
COL	COLlector
COM	air COMpressor
COO	COOler
COS	COmposite Sampler
DAM	DAMper
DIF	DIFfuser
DRY	DRYer
DRV	DRiVe mechanism
EAM	Electric Analog Modulating valve or gate actuator
EDM	Electric Discrete Modulating valve or gate actuator
EDR	Electric Discrete Run open / close valve or gate actuator
EF	Exhaust Fan
ENG	ENgine Generator
EVP	EVaPorator
EXC	EXChanger
FACP	Fire Alarm Control Panel
FAN	FAN
FDR	FeeDeR
FLO	FLOcculator
FLT	FILTer
GAT	GATe
GCL	Grit Classifier
GRI	GRInder
HOI	HOIST
HTR	HEATER
INJ	INJector
KNG	Knife Gate
LCP	Local Control Panel
MAU	Make-up Air Unit
MBS	Mechanical Bar Screen
MTR	MoToR
MWH	Motor Winding Heater
MIX	MIXer
MOV	Motor Operated Valve
PBU	Polymer Blending Unit
PMP	PuMP
PRE	PREss
PUD	PUlsation Dampner
SCB	SCruBber
SCR	SCReen
SF	Supply Fan
SLC	SLudge Collector
SOV	SOlenoiv Valve
STR	STRainer
THI	THIckener
TNK	TaNK
TRA	TRAp
VAL	VALve
VCP	Vendor Control Panel
WEL	WELl

LOOP NUMBERING			
000		630	
010	PLANT INFLUENT/SEPTAGE RECEIVING	640	
020		650	
030		660	
040	HEADWORKS CHANNEL NO. 1	670	
050	HEADWORKS CHANNEL NO. 2	680	
060		690	
070	ODOR CONTROL	700	
080	OXIDATION DITCH-MIXED LIQUOR SPLITTER BOX	710	GROUND WATER WELL, NON-POTABLE WATER
090	OXIDATION DITCH NO. 1	720	FIRE PUMP ENGINE
100	OXIDATION DITCH NO. 2	730	NON-POTABLE WATER DISTRIBUTION
110	SECONDARY CLARIFIERS	740	
120	RAS/WAS PUMP STATION	750	PLANT WATER
130	SCUM PUMP STATION	760	POTABLE WATER
140		770	
150		780	
160		790	
170		800	ELECTRICAL BUILDING/ ENGINE GENERATOR
180	FILTER INFLUENT PUMPING	810	
190	FLASH MIXING	820	ADMINISTRATION BUILDING
200	FLOCCULATION BASIN	830	
210	FILTER NO. 1	840	MAINTENANCE BUILDING
220	FILTER NO. 2	850	
230	FILTER EFFLUENT	860	
240	UV	870	
250	EFFLUENT SAMPLING	880	
260		890	
270	TERTIARY CHEMICAL SYSTEM 1	900	
280	TERTIARY CHEMICAL SYSTEM 2	910	
290		920	
300	EFFLUENT PUMP STATION	930	
310	EFFLUENT PUMP STATION	940	
320	REW STORAGE PONDS	950	
330		960	
340		970	
350		980	
360		990	
370			
380			
390			
400	SOLIDS STORAGE TANKS		
410	SOLIDS STORAGE TANKS		
420	DEWATERING TRAINS		
430	DEWATERING SCREW PRESS, CONVEYOR		
440	POLYMER STORAGE		
450	POLYMER FEED		
460	DEWATERING SYSTEM		
470	DEWATERING BUILDING MECHANICAL/HVAC		
480			
490			
500	PLANT DRAIN PUMP STATION		
510			
520			
530			
540			
550			
560			
570			
580			
590			
600	STORM DRAIN PUMP STATION		
610			
620			

REV	DATE	BY	DESCRIPTION

DESIGNED CAG

DRAWN AD

CHECKED RAM

DATE SEPT 2013

REGISTERED PROFESSIONAL ENGINEER CARLO A. GROSS No. 16851 ELECTRICAL STATE OF CALIFORNIA 9/16/2013

carollo

SAN LUIS OBISPO COUNTY

SAN LUIS OBISPO COUNTY

LOS OSOS WATER RECYCLING FACILITY PROJECT

INSTRUMENTATION

EQUIPMENT TAGGING SYSTEM

VERIFY SCALES

BAR IS ONE INCH ON ORIGINAL DRAWING

0 1"

IF NOT ONE INCH ON THIS SHEET, ADJUST SCALES ACCORDINGLY

JOB NO. 8930A.11

DRAWING NO. 00N06

SHEET NO. 393 OF 549

PROJECT NO. 8930A.11 FILE NAME: 8930A1100N006.dgn

Plot Date: 16-SEP-2013 6:06:43 PM
User: BRoepken
PlotScale: 2:1
DesignScript: Carollo_Std_Pen_v0905.pen
ColorTable: gshade.ctb
Model: Layout1
LAST SAVED BY: lmorabito

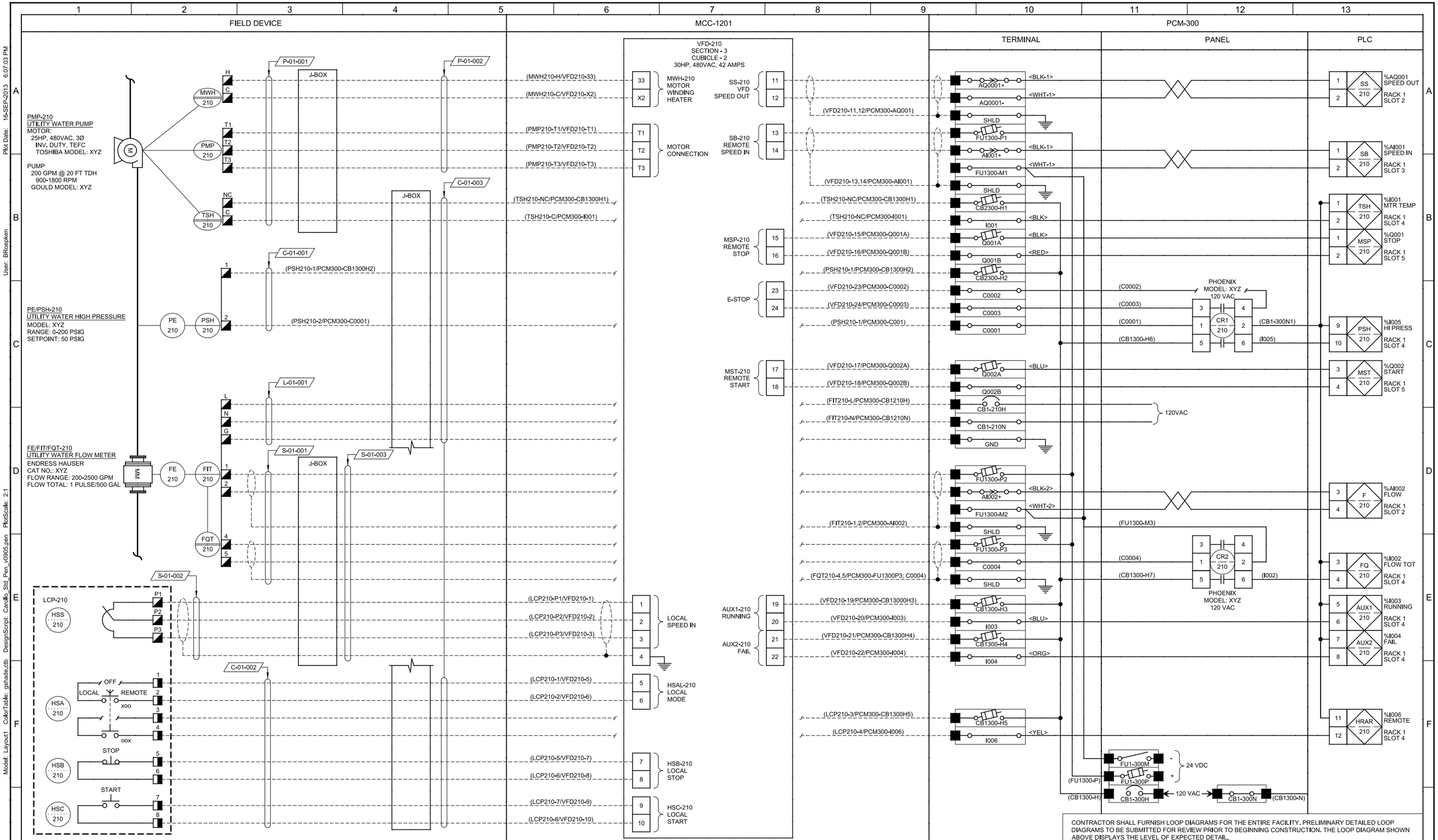

CONTRACTOR SHALL FURNISH LOOP DIAGRAMS FOR THE ENTIRE FACILITY. PRELIMINARY DETAILED LOOP DIAGRAMS TO BE SUBMITTED FOR REVIEW PRIOR TO BEGINNING CONSTRUCTION. THE LOOP DIAGRAM SHOWN ABOVE DISPLAYS THE LEVEL OF EXPECTED DETAIL.

REV	DATE	BY	DESCRIPTION

DESIGNED CAG
DRAWN AD
CHECKED RAM
DATE SEPT 2013

REGISTERED PROFESSIONAL ENGINEER CARLO A. GROSS No. 18851 ELECTRICAL STATE OF CALIFORNIA 9/16/2013

carollo

SAN LUIS OBISPO COUNTY

SAN LUIS OBISPO COUNTY
LOS OSOS WATER RECYCLING FACILITY PROJECT
INSTRUMENTATION
TYPICAL LOOP DIAGRAM

VERIFY SCALES
BAR IS ONE INCH ON ORIGINAL DRAWING
0 1"
IF NOT ONE INCH ON THIS SHEET, ADJUST SCALES ACCORDINGLY

JOB NO. 8930A.11
DRAWING NO. 00N07
SHEET NO. 394 OF 549

PROJECT NO. 8930A.11 FILE NAME: 8930A1100N007.dgn

Plot Date: 16-SEP-2013 6:07:03 PM User: BRoepken Model: Layout1 ColorTable: gshade.ctb DesignScript: Carollo_Std_Pen_v0905.pen PlotScale: 2:1 LAST SAVED BY: ccabrera

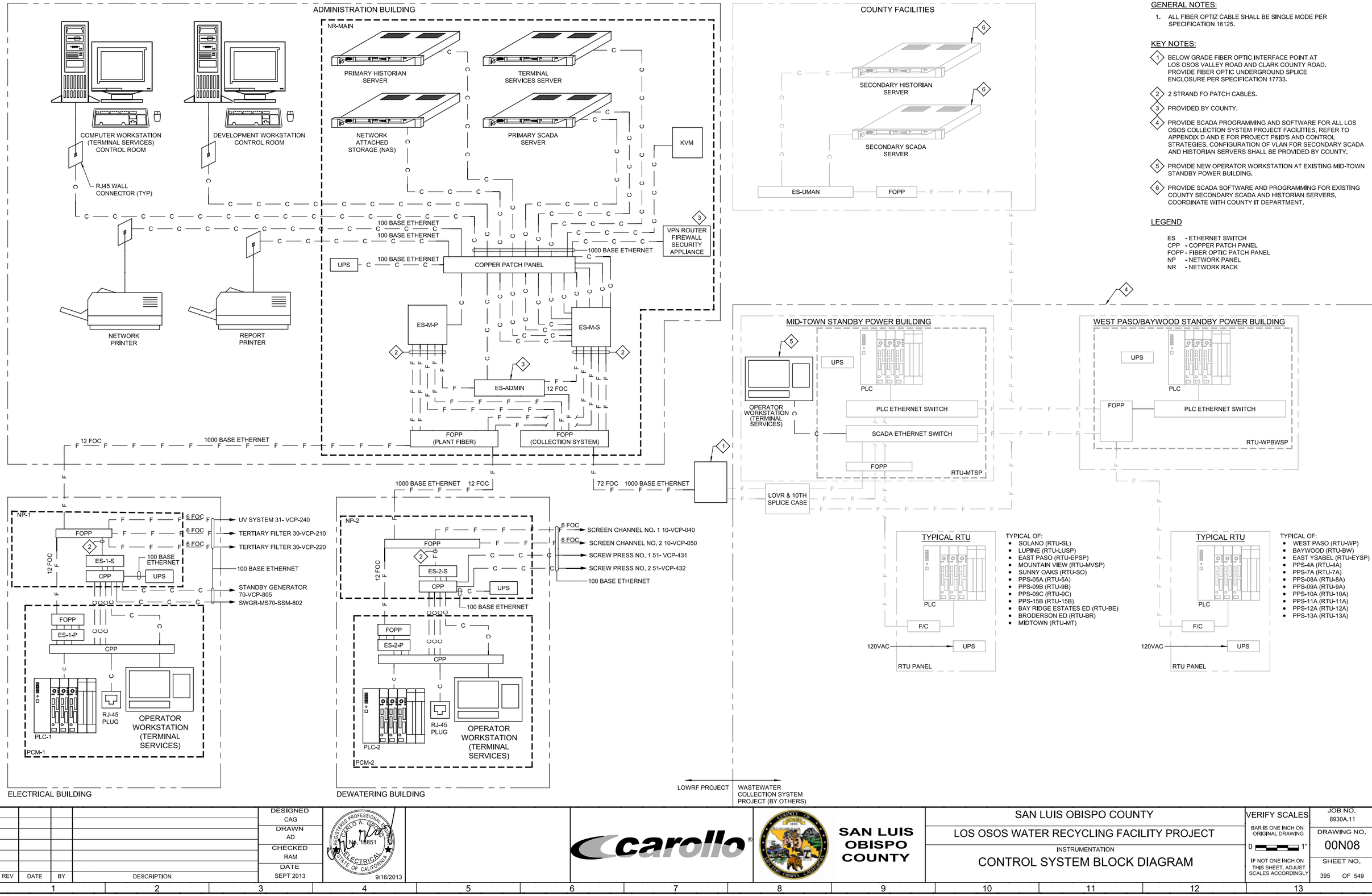

GENERAL NOTES:

1. ALL FIBER OPTIZ CABLE SHALL BE SINGLE MODE PER SPECIFICATION 16125.

KEY NOTES:

1. BELOW GRADE FIBER OPTIC INTERFACE POINT AT LOS OSOS VALLEY ROAD AND CLARK COUNTY ROAD. PROVIDE FIBER OPTIC UNDERGROUND SPLICE ENCLOSURE PER SPECIFICATION 17733.
2. 2 STRAND FO PATCH CABLES.
3. PROVIDED BY COUNTY.
4. PROVIDE SCADA PROGRAMMING AND SOFTWARE FOR ALL LOS OSOS COLLECTION SYSTEM PROJECT FACILITIES. REFER TO APPENDIX D AND E FOR PROJECT P&ID'S AND CONTROL STRATEGIES. CONFIGURATION OF VLAN FOR SECONDARY SCADA AND HISTORIAN SERVERS SHALL BE PROVIDED BY COUNTY.
5. PROVIDE NEW OPERATOR WORKSTATION AT EXISTING MID-TOWN STANDBY POWER BUILDING.
6. PROVIDE SCADA SOFTWARE AND PROGRAMMING FOR EXISTING COUNTY SECONDARY SCADA AND HISTORIAN SERVERS. COORDINATE WITH COUNTY IT DEPARTMENT.

LEGEND

ES - ETHERNET SWITCH
CPP - COPPER PATCH PANEL
FOPP - FIBER OPTIC PATCH PANEL
NP - NETWORK PANEL
NR - NETWORK RACK

REV	DATE	BY	DESCRIPTION

DESIGNED CAG
DRAWN AD
CHECKED RAM
DATE SEPT 2013

REGISTERED PROFESSIONAL ENGINEER CARLO A. GRECO No. 16851 ELECTRICAL STATE OF CALIFORNIA 9/16/2013

carollo

SAN LUIS OBISPO COUNTY

SAN LUIS OBISPO COUNTY
LOS OSOS WATER RECYCLING FACILITY PROJECT
INSTRUMENTATION
CONTROL SYSTEM BLOCK DIAGRAM

VERIFY SCALES
BAR IS ONE INCH ON ORIGINAL DRAWING
0 1"
IF NOT ONE INCH ON THIS SHEET, ADJUST SCALES ACCORDINGLY

JOB NO. 8930A.11
DRAWING NO. 00N08
SHEET NO. 395 OF 549

PROJECT NO. 8930A.11 FILE NAME: 8930A1100N008.dgn

Plot Date: 16-SEP-2013 6:07:22 PM
User: BRoepken
PlotScale: 2:1
DesignScript: Carollo_Std_Pen_v0905.pen
ColorTable: gshade.ctb
Model: Layout1
LAST SAVED BY: broepken

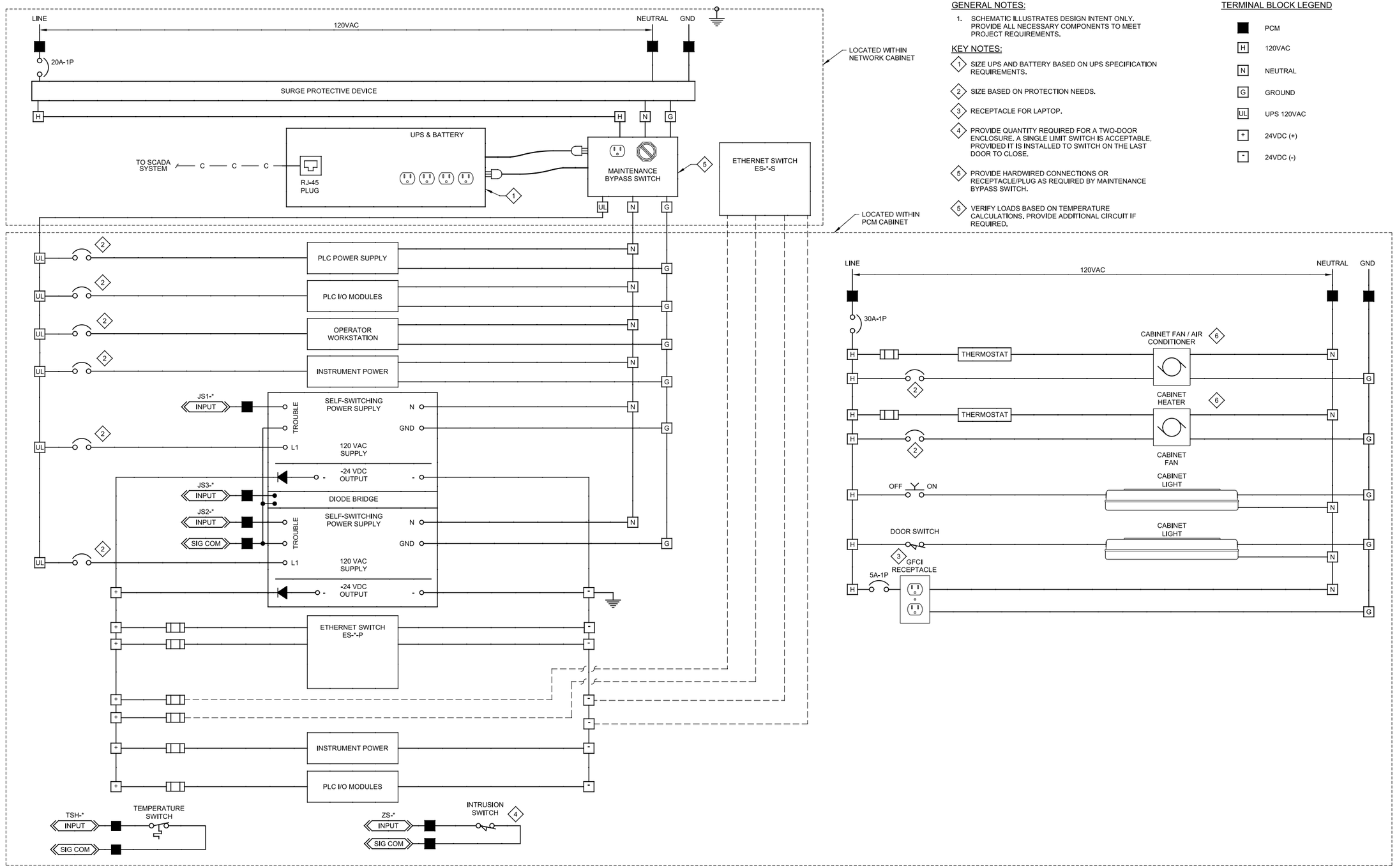

GENERAL NOTES:

1. SCHEMATIC ILLUSTRATES DESIGN INTENT ONLY. PROVIDE ALL NECESSARY COMPONENTS TO MEET PROJECT REQUIREMENTS.

KEY NOTES:

1. SIZE UPS AND BATTERY BASED ON UPS SPECIFICATION REQUIREMENTS.
2. SIZE BASED ON PROTECTION NEEDS.
3. RECEPTACLE FOR LAPTOP.
4. PROVIDE QUANTITY REQUIRED FOR A TWO-DOOR ENCLOSURE. A SINGLE LIMIT SWITCH IS ACCEPTABLE, PROVIDED IT IS INSTALLED TO SWITCH ON THE LAST DOOR TO CLOSE.
5. PROVIDE HARDWIRED CONNECTIONS OR RECEPTACLE/PLUG AS REQUIRED BY MAINTENANCE BYPASS SWITCH.
5. VERIFY LOADS BASED ON TEMPERATURE CALCULATIONS. PROVIDE ADDITIONAL CIRCUIT IF REQUIRED.

TERMINAL BLOCK LEGEND

- PCM
- H — 120VAC
- N — NEUTRAL
- G — GROUND
- UL — UPS 120VAC
- \+ — 24VDC (+)
- \- — 24VDC (-)

REV	DATE	BY	DESCRIPTION

DESIGNED CAG
DRAWN AD
CHECKED RAM
DATE SEPT 2013

REGISTERED PROFESSIONAL ENGINEER — CARLO A. GRECO — No. 18851 — ELECTRICAL — STATE OF CALIFORNIA — 9/16/2013

carollo

SAN LUIS OBISPO COUNTY

SAN LUIS OBISPO COUNTY

LOS OSOS WATER RECYCLING FACILITY PROJECT

INSTRUMENTATION

TYPICAL PCM CABINET POWER SCHEMATIC

VERIFY SCALES
BAR IS ONE INCH ON ORIGINAL DRAWING
0 — 1"
IF NOT ONE INCH ON THIS SHEET, ADJUST SCALES ACCORDINGLY

JOB NO. 8930A.11
DRAWING NO. 00N09
SHEET NO. 396 OF 549

PROJECT NO. 8930A.11
FILE NAME: 8930A1100N009.dgn

Plot Date: 16-SEP-2013 6:07:41 PM
User: BRoepken
PlotScale: 2:1
DesignScript: Carollo_Std_Pen_v0905.pen
ColorTable: gshade.ctb
Model: Layout1
LAST SAVED BY: tmorabito

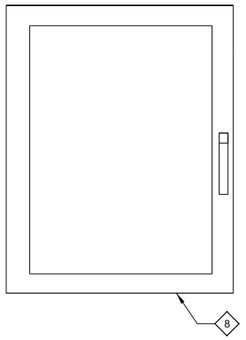

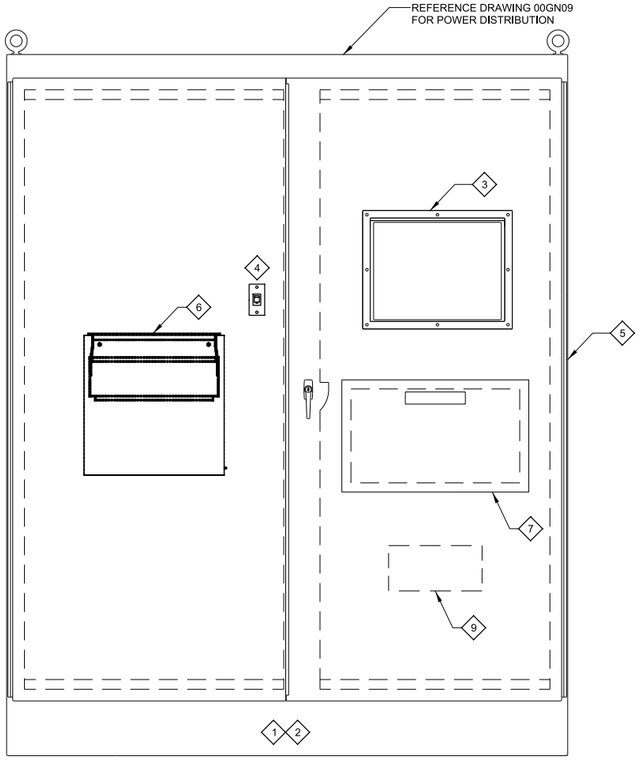

A - TYPICAL PCM CABINET/NETWORK PANEL LAYOUT

SCALE: N.T.S.
FILE: 8930A1100090601.dgn

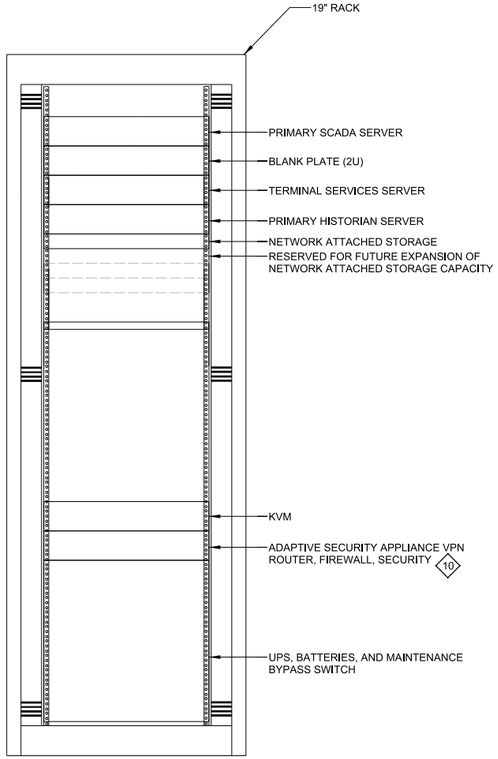

B - NR-MAIN (SERVER RACK)

SCALE: N.T.S.
FILE: 8930A1100090601.dgn

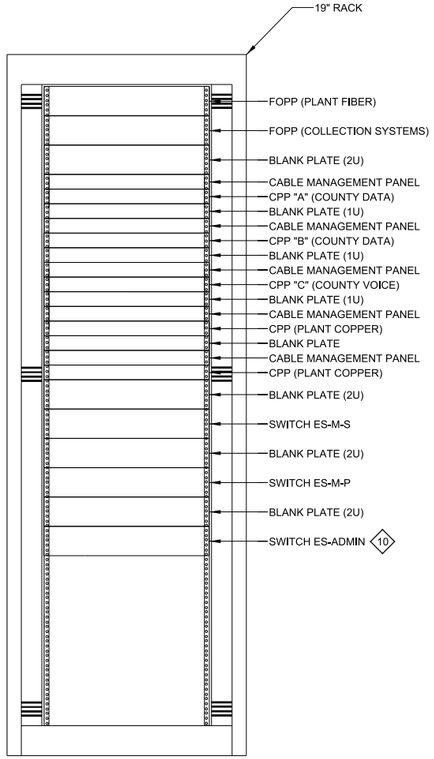

C - NR-MAIN (CABLE MANAGEMENT RACK)

SCALE: N.T.S.
FILE: 8930A1100090601.dgn

GENERAL NOTES:

1. REFER TO APPENDIX J FOR COUNTY STANDARD DATA AND VOICE CABLING REQUIREMENTS.

KEY NOTES:

1. PCM SHALL BE MINIMUM 24" DEEP.
2. NEMA 12 ENCLOSURE EPOXY PAINT FIELD VERIFY COLOR.
3. PANEL MOUNT SCADA MONITOR.
4. SCADA NETWORK PORT, PROVIDE RJ-45 ETHERNET PORT ON THE FRONT DOOR OF CABINET.
5. PROVIDE ADDITIONAL CABINET SPACE AS REQUIRED.
6. FOLDING LAPTOP SHELF.
7. PROVIDE RECESSED KEY BOARD BOX PER SPECIFICATION 17730.
8. HINGED NETWORK PANEL 19" RACK WALL MOUNTED ENCLOSURE WITH:
   - FIBER PATCH PANEL 19" RACK MOUNT
   - COPPER PATCH PANEL 19" RACK MOUNT
   - ETHERNET SWITCH 19" RACK MOUNT
   - UPS 19" RACK MOUNT
   - UPS BYPASS
9. PROVIDE SCADA PC PER SPECIFICATION 17730.
10. PROVIDED BY COUNTY.

REV	DATE	BY	DESCRIPTION

DESIGNED CAG
DRAWN VCP
CHECKED RAM
DATE SEPT 2013

REGISTERED PROFESSIONAL ENGINEER
CARLO A. GROSSINI
No. 16851
ELECTRICAL
STATE OF CALIFORNIA
9/16/2013

carollo

SAN LUIS OBISPO COUNTY

SAN LUIS OBISPO COUNTY
LOS OSOS WATER RECYCLING FACILITY PROJECT
INSTRUMENTATION
PLC, NETWORK PANEL, & NETWORK RACK LAYOUTS

VERIFY SCALES
BAR IS ONE INCH ON ORIGINAL DRAWING
0 1"
IF NOT ONE INCH ON THIS SHEET, ADJUST SCALES ACCORDINGLY

JOB NO. 8930A.11
DRAWING NO. 00N10
SHEET NO. 397 OF 549

PROJECT NO. 8930A.11 FILE NAME: 8930A1100N010.dgn

Plot Date: 16-SEP-2013 6:07:58 PM
User: BRoepken
PlotScale: 2:1
DesignScript: Carollo_Std_Pen_v0905.pen
ColorTable: gshade.ctb
Model: Layout1
LAST SAVED BY: tmorabito

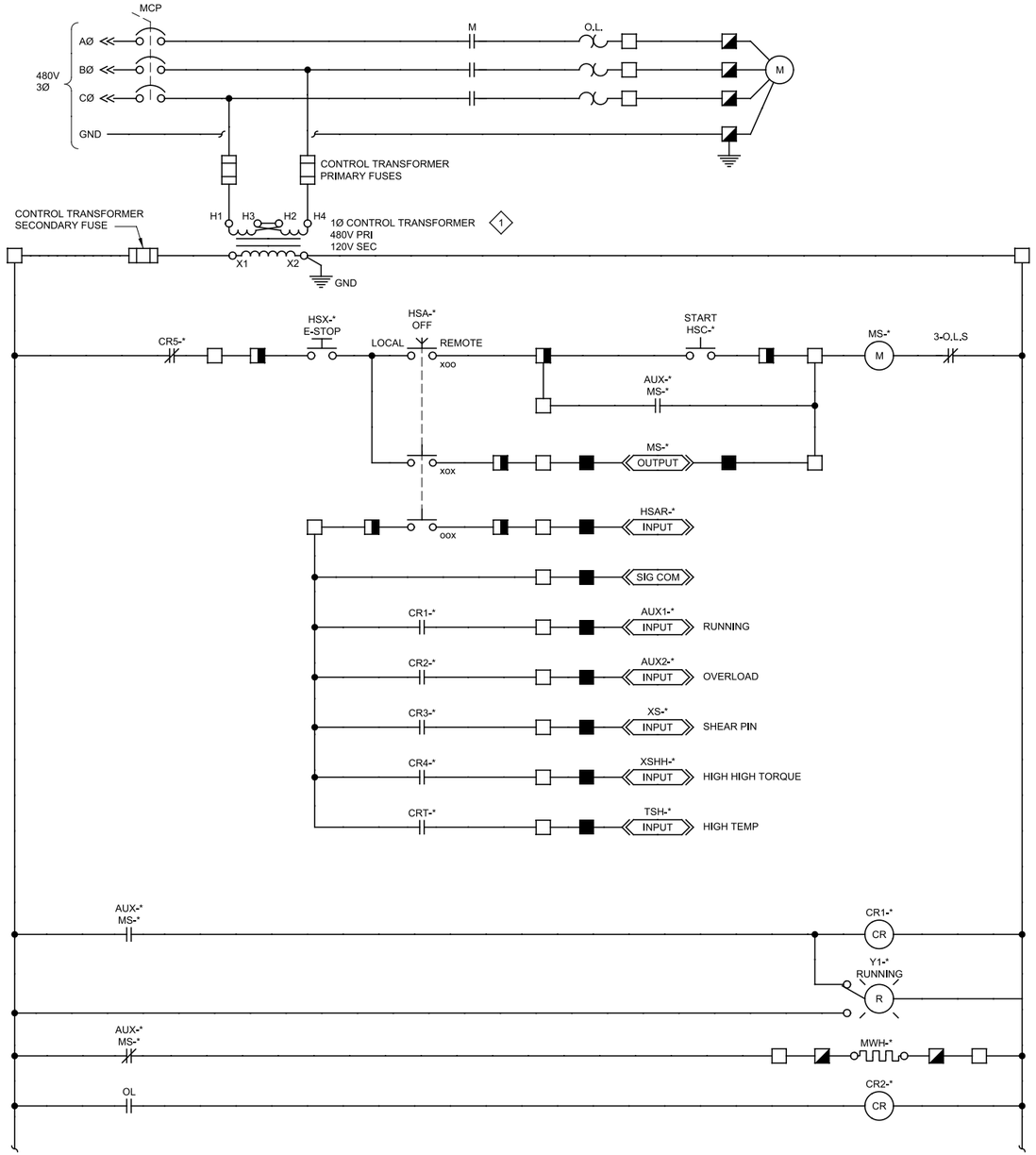

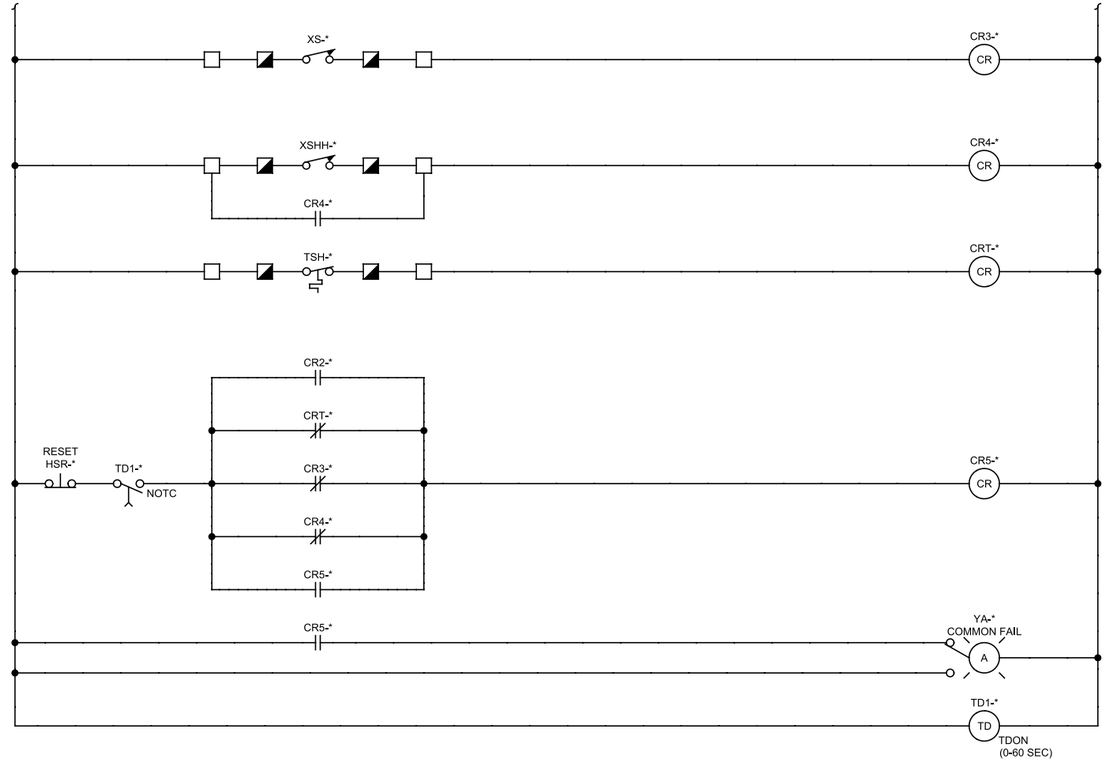

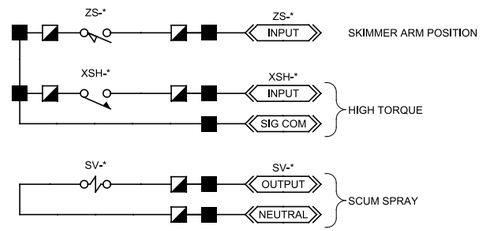

KEY NOTES:

1. SIZE CONTROL POWER TRANSFORMER IN ACCORDANCE WITH ALL INDICATED LOADS.

A SECONDARY CLARIFIERS DRIVES

21N01, 21N02, EOL04, EOL07

21-CLR-111 → *=111
21-CLR-112 → *=112

REV	DATE	BY	DESCRIPTION

DESIGNED CAG
DRAWN VCP
CHECKED RAM
DATE SEPT 2013

CARLO A. GRECO No. 16851 REGISTERED PROFESSIONAL ENGINEER ELECTRICAL STATE OF CALIFORNIA 9/16/2013

carollo

SAN LUIS OBISPO COUNTY

SAN LUIS OBISPO COUNTY
LOS OSOS WATER RECYCLING FACILITY PROJECT
INSTRUMENTATION
CONTROL SCHEMATICS - 1

VERIFY SCALES
BAR IS ONE INCH ON ORIGINAL DRAWING
0 1"
IF NOT ONE INCH ON THIS SHEET, ADJUST SCALES ACCORDINGLY

JOB NO. 8930A.11
DRAWING NO. 00N11
SHEET NO. 398 OF 549

PROJECT NO. 8930A.11 FILE NAME: 8930A1100N011.dgn

Plot Date: 16-SEP-2013 6:08:15 PM
User: BRoepken
PlotScale: 2:1
DesignScript: Carollo_Std_Pen_v0905.pen
ColorTable: gshade.ctb
Model: Layout1
LAST SAVED BY: ejohnson

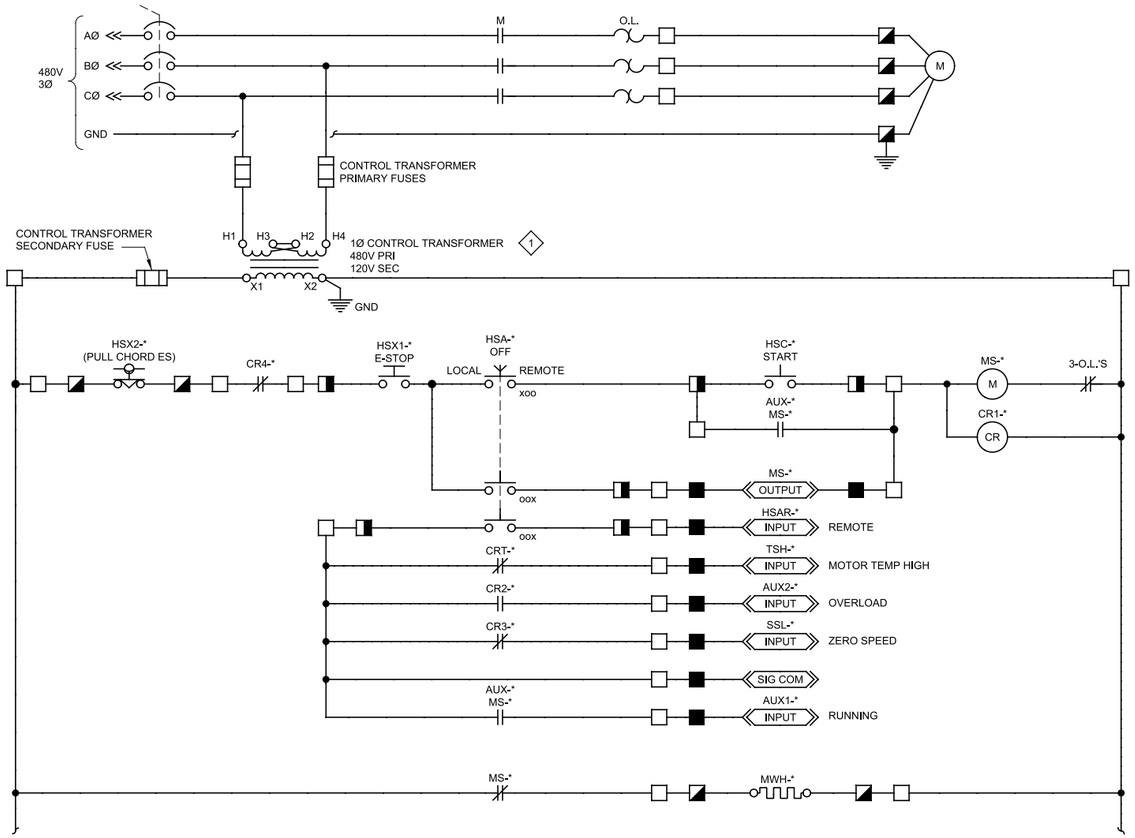

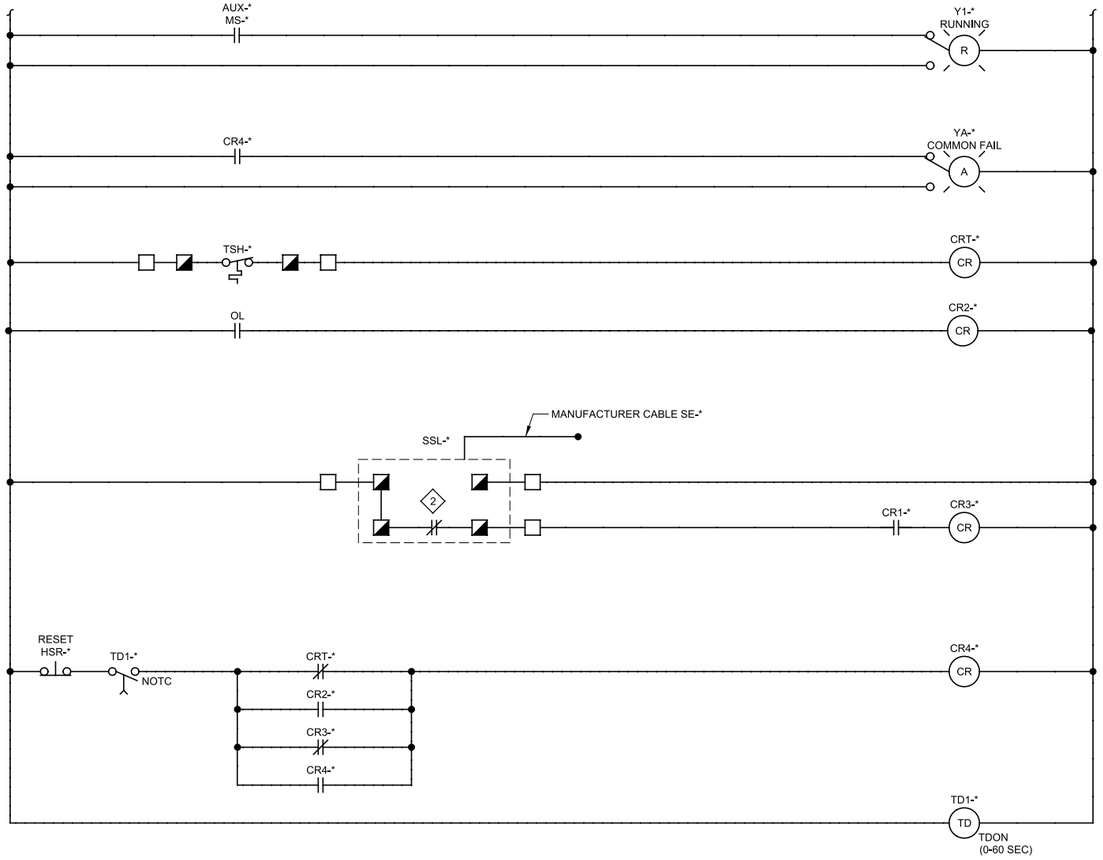

KEY NOTES:

1. SIZE CONTROL POWER TRANSFORMER IN ACCORDANCE WITH ALL INDICATED LOADS
2. MOTION SENSOR WITH BUILT-IN ON TIME DELAY. CONTACT OPENES ON LOW SPEED MOTION.

B CAKE CONVEYORS

51N03, EOL11, EOL13

51-CNV-433 ◄——► *=433
51-CNV-434 ◄——► *=434

REV	DATE	BY	DESCRIPTION

DESIGNED PCK
DRAWN CGR
CHECKED RAM
DATE SEPT 2013

REGISTERED PROFESSIONAL ENGINEER CARLO A. GROSSO No. 16851 ELECTRICAL STATE OF CALIFORNIA 9/16/2013

carollo

SAN LUIS OBISPO COUNTY

SAN LUIS OBISPO COUNTY
LOS OSOS WATER RECYCLING FACILITY PROJECT
INSTRUMENTATION
CONTROL SCHEMATICS - 2

VERIFY SCALES
BAR IS ONE INCH ON ORIGINAL DRAWING
0 1"
IF NOT ONE INCH ON THIS SHEET, ADJUST SCALES ACCORDINGLY

JOB NO. 8930A.11
DRAWING NO. 00N12
SHEET NO. 399 OF 549

PROJECT NO. 8930A.11 FILE NAME: 8930A1100N012.dgn

Plot Date: 16-SEP-2013 6:08:32 PM
User: BRoepken
Model: Layout1 ColorTable: gshade.ctb DesignScript: Carollo_Std_Pen_v0905.pen PlotScale: 2:1
LAST SAVED BY: ejohnson

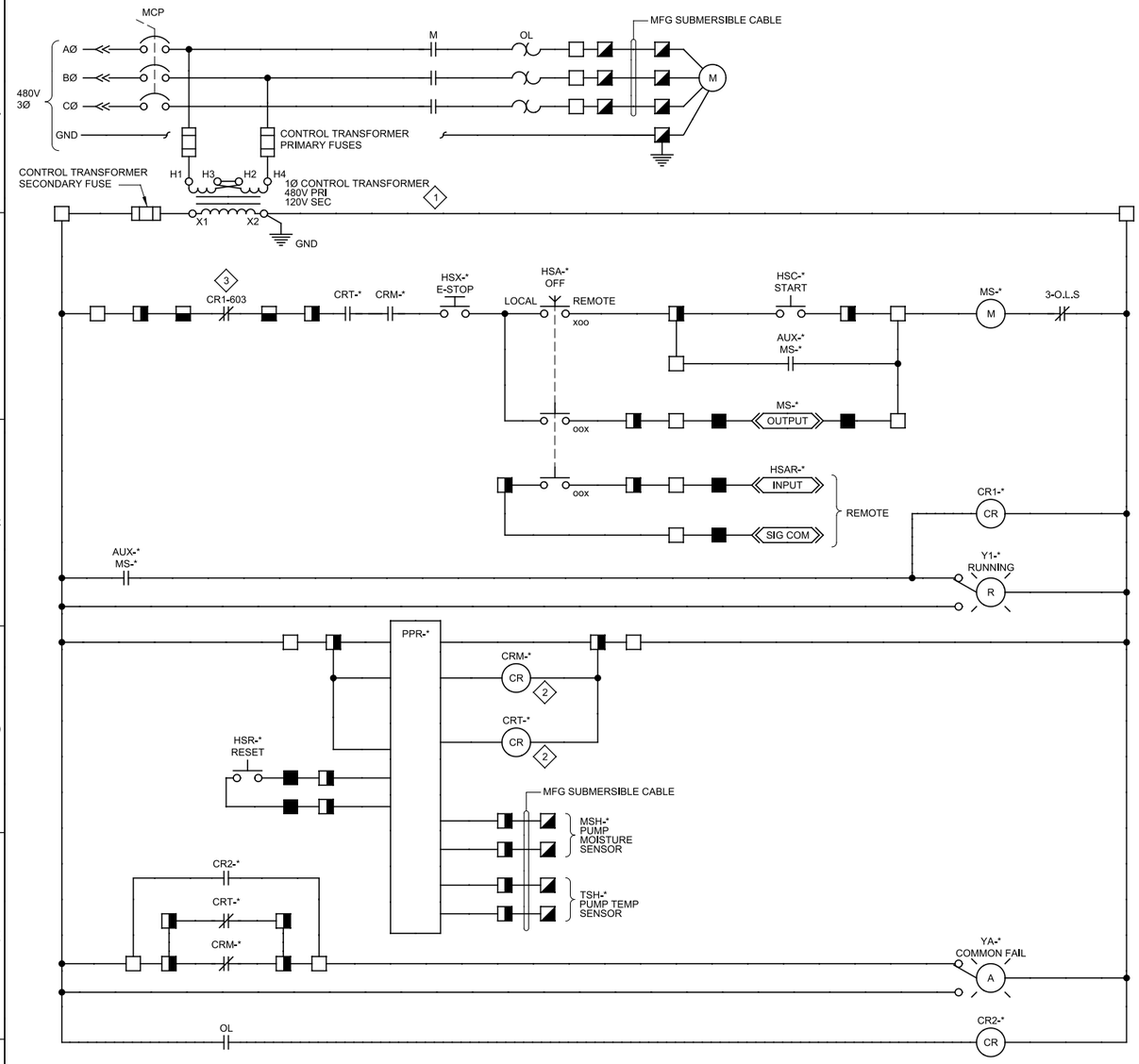

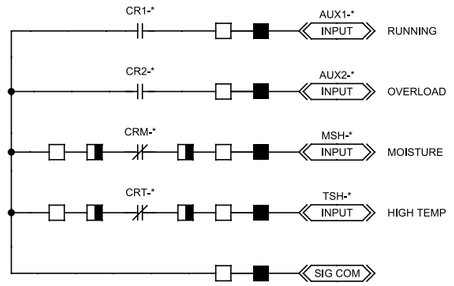

KEY NOTES:

1. SIZE CONTROL POWER TRANSFORMER IN ACCORDANCE WITH ALL INDICATED LOADS.
2. RELAY DE-ENERGIZES ON DETECTION OF FAULT CONDITION.
3. APPLICABLE FOR 04-PMP-601 AND 04-PMP-602 ONLY.
4. INSTALL AND WIRE PPR RELAY (FURNISHED BY PUMP SUPPLIER) .
5. INTRINSIC SAFE OWNER.

04-PMP-601	*=601
04-PMP-602	*=602
23-PMP-131	*=131
23-PMP-132	*=132

D STORM WATER PUMPS, SCUM PUMPS

04N02, 23N01, EOL04, EOL07, EOL11, EOL14

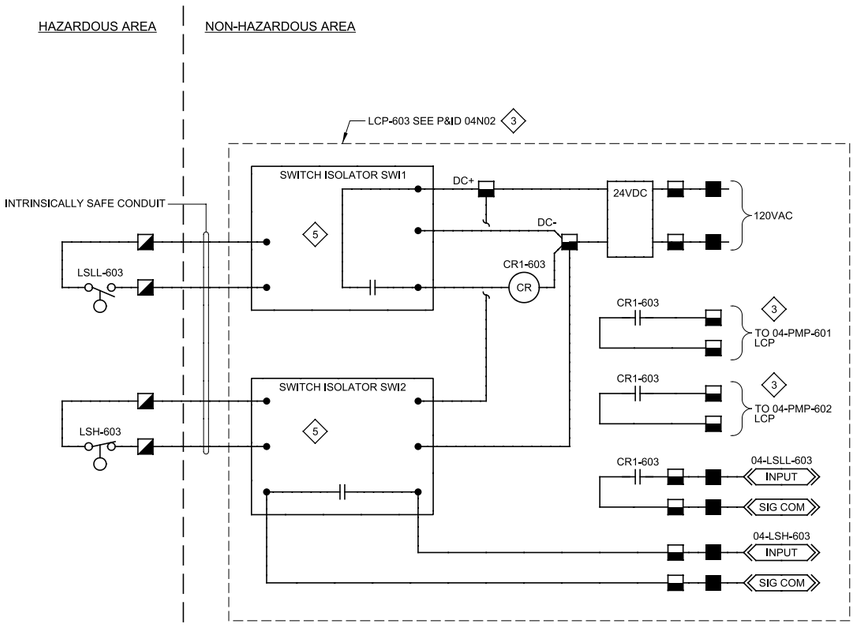

REV	DATE	BY	DESCRIPTION

DESIGNED PCK
DRAWN CGR
CHECKED RAM
DATE SEPT 2013

REGISTERED PROFESSIONAL ENGINEER CARLO A. GRAGG No. 16851 ELECTRICAL STATE OF CALIFORNIA 9/16/2013

carollo

SAN LUIS OBISPO COUNTY

SAN LUIS OBISPO COUNTY

LOS OSOS WATER RECYCLING FACILITY PROJECT

INSTRUMENTATION

CONTROL SCHEMATICS - 3

VERIFY SCALES
BAR IS ONE INCH ON ORIGINAL DRAWING
0 1"
IF NOT ONE INCH ON THIS SHEET, ADJUST SCALES ACCORDINGLY

JOB NO. 8930A.11
DRAWING NO. 00N13
SHEET NO. 400 OF 549

PROJECT NO. 8930A.11 FILE NAME: 8930A1100N013.dgn

Plot Date: 16-SEP-2013 6:08:49 PM
User: BRoepken
PlotScale: 2:1
DesignScript: Carollo_Std_Pen_v0905.pen
ColorTable: gshade.ctb
Model: Layout1
LAST SAVED BY: ejohnson

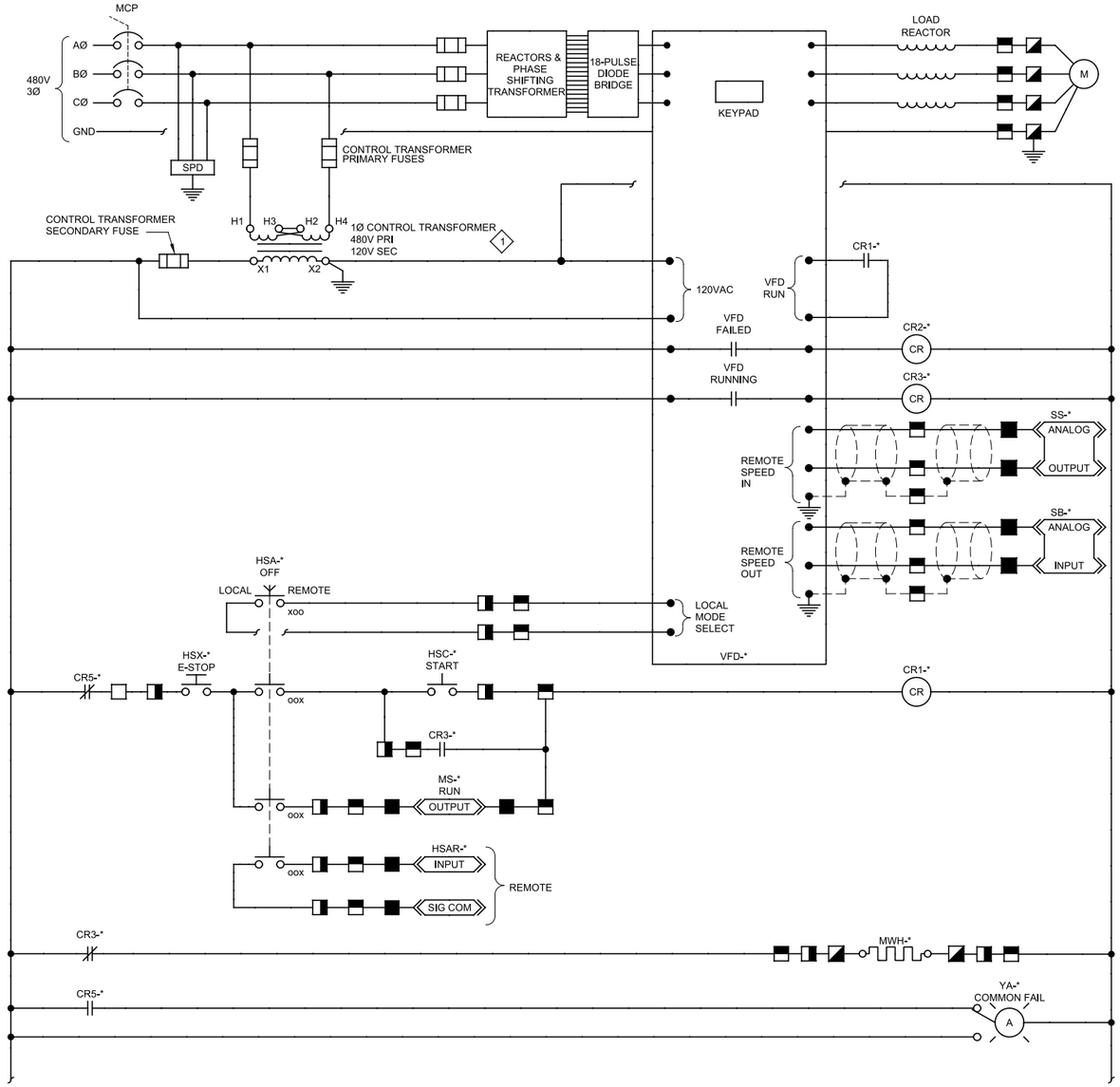

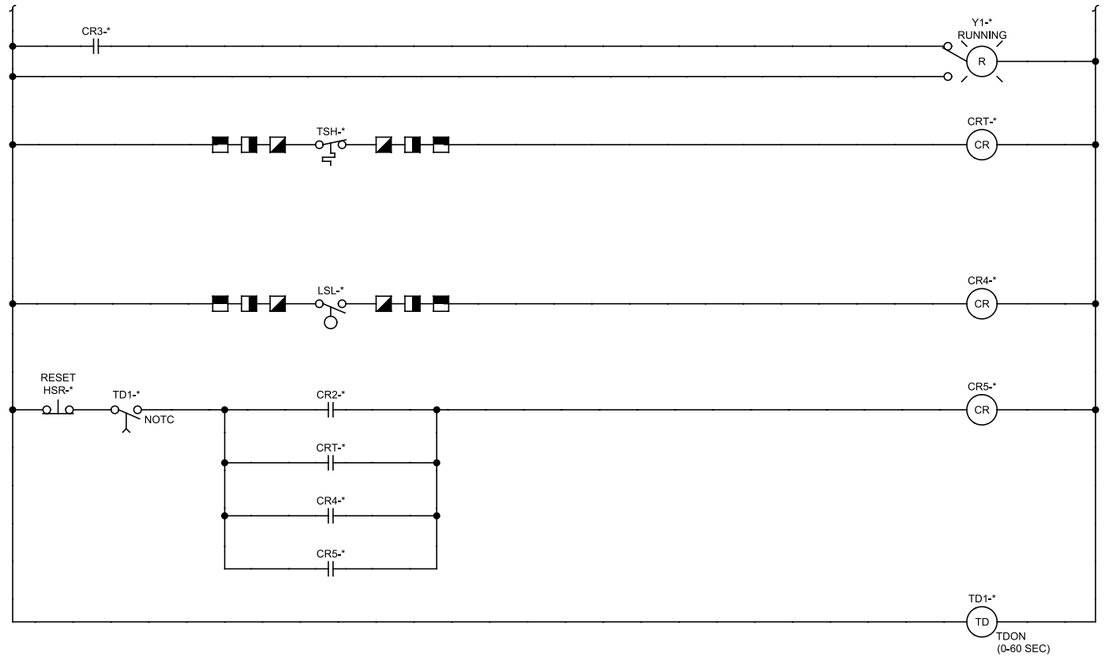

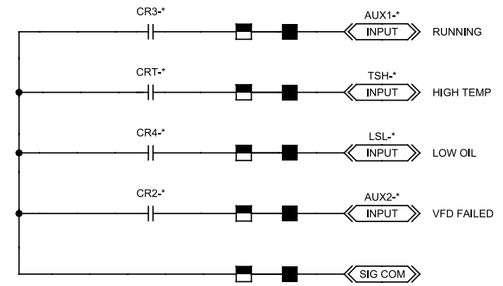

KEY NOTES:

1. SIZE CONTROL POWER TRANSFORMER IN ACCORDANCE WITH ALL INDICATED LOADS

E AERATORS

20N01, 20N02, EOL10, EOL13

20-AER-091 → *=091
20-AER-092 → *=092
20-AER-101 → *=101
20-AER-102 → *=102

REV	DATE	BY	DESCRIPTION

DESIGNED PCK
DRAWN CGR
CHECKED RAM
DATE SEPT 2013

REGISTERED PROFESSIONAL ENGINEER CARLO A. GROSSI No. 16851 ELECTRICAL STATE OF CALIFORNIA 9/16/2013

carollo

SAN LUIS OBISPO COUNTY

SAN LUIS OBISPO COUNTY
LOS OSOS WATER RECYCLING FACILITY PROJECT
INSTRUMENTATION
CONTROL SCHEMATICS - 4

VERIFY SCALES
BAR IS ONE INCH ON ORIGINAL DRAWING
0 1"
IF NOT ONE INCH ON THIS SHEET, ADJUST SCALES ACCORDINGLY

JOB NO. 8930A.11
DRAWING NO. 00N14
SHEET NO. 401 OF 549

PROJECT NO. 8930A.11 FILE NAME: 8930A1100N014.dgn

Plot Date: 16-SEP-2013 6:09:06 PM
User: BRoepken
PlotScale: 2:1
DesignScript: Carollo_Std_Pen_v0905.pen
ColorTable: gshade.ctb
Model: Layout1
LAST SAVED BY: ejohnson

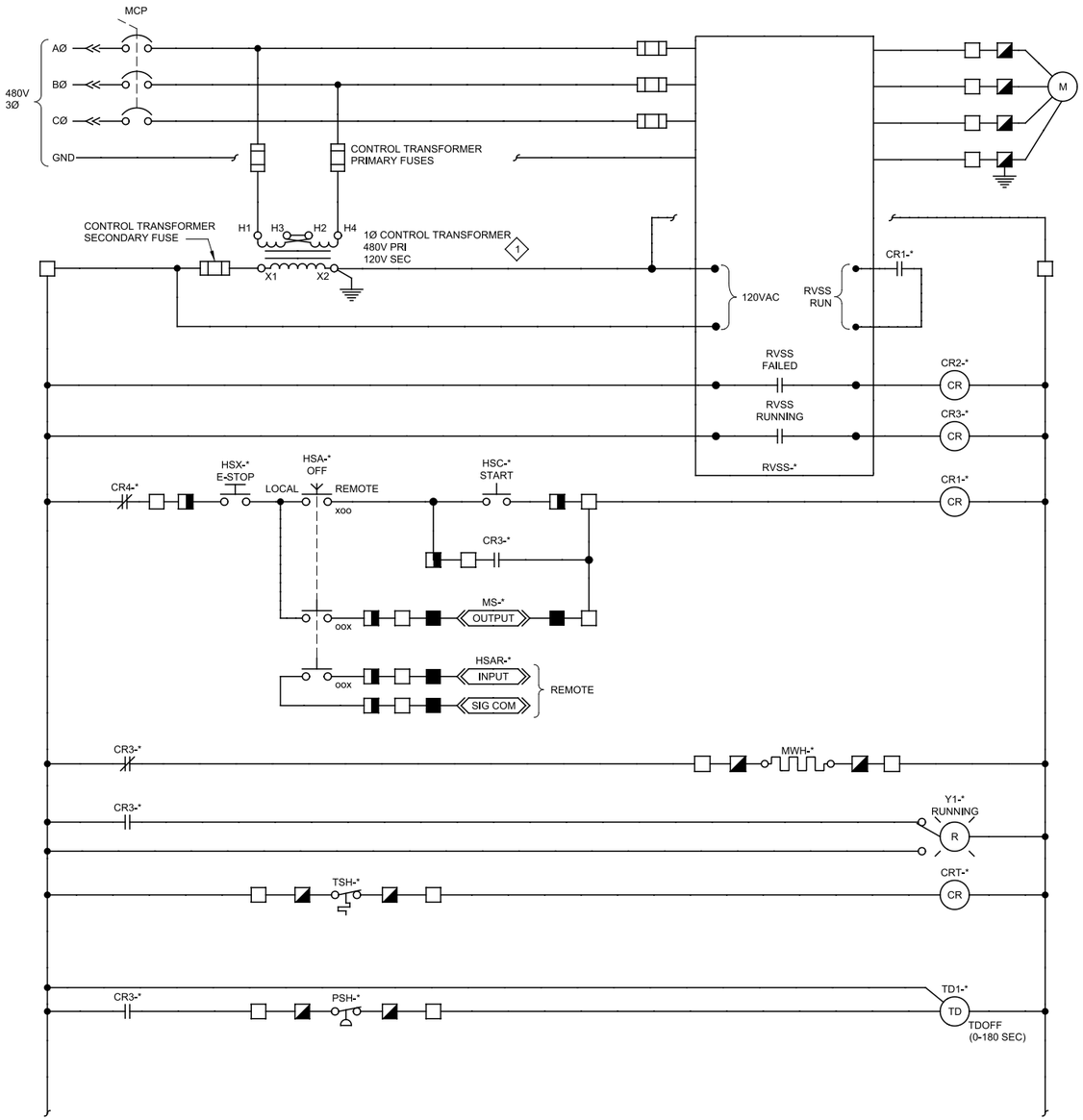

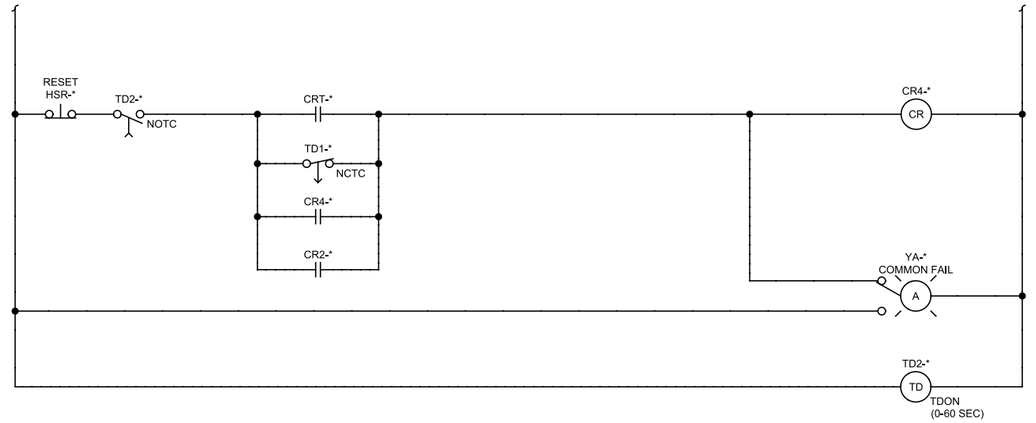

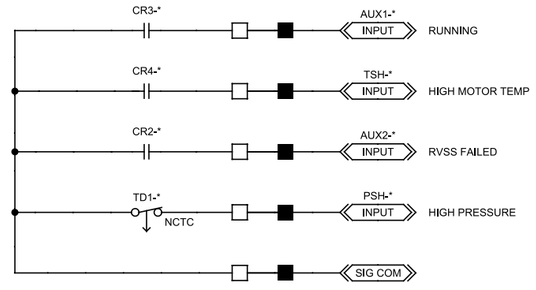

KEY NOTES:

1. SIZE CONTROL POWER TRANSFORMER IN ACCORDANCE WITH ALL INDICATED LOADS

F EFFLUENT PUMPS

40N01, 40N02, EOL10, EOL13

40-PMP-301 → *=301
40-PMP-302 → *=302
40-PMP-303 → *=303
40-PMP-304 → *=304

REV	DATE	BY	DESCRIPTION

DESIGNED PCK
DRAWN CGR
CHECKED RAM
DATE SEPT 2013

REGISTERED PROFESSIONAL ENGINEER CARLO A. GROSSI No. 16851 ELECTRICAL STATE OF CALIFORNIA 9/16/2013

carollo

SAN LUIS OBISPO COUNTY

SAN LUIS OBISPO COUNTY
LOS OSOS WATER RECYCLING FACILITY PROJECT
INSTRUMENTATION
CONTROL SCHEMATICS - 5

VERIFY SCALES
BAR IS ONE INCH ON ORIGINAL DRAWING
0 1"
IF NOT ONE INCH ON THIS SHEET, ADJUST SCALES ACCORDINGLY

JOB NO. 8930A.11
DRAWING NO. 00N15
SHEET NO. 402 OF 549

PROJECT NO. 8930A.11 FILE NAME: 8930A1100N015.dgn

Plot Date: 16-SEP-2013 6:09:23 PM
User: BRoepken
PlotScale: 2:1
DesignScript: Carollo_Std_Pen_v0905.pen
ColorTable: gshade.ctb
Model: Layout1
LAST SAVED BY: ejohnson

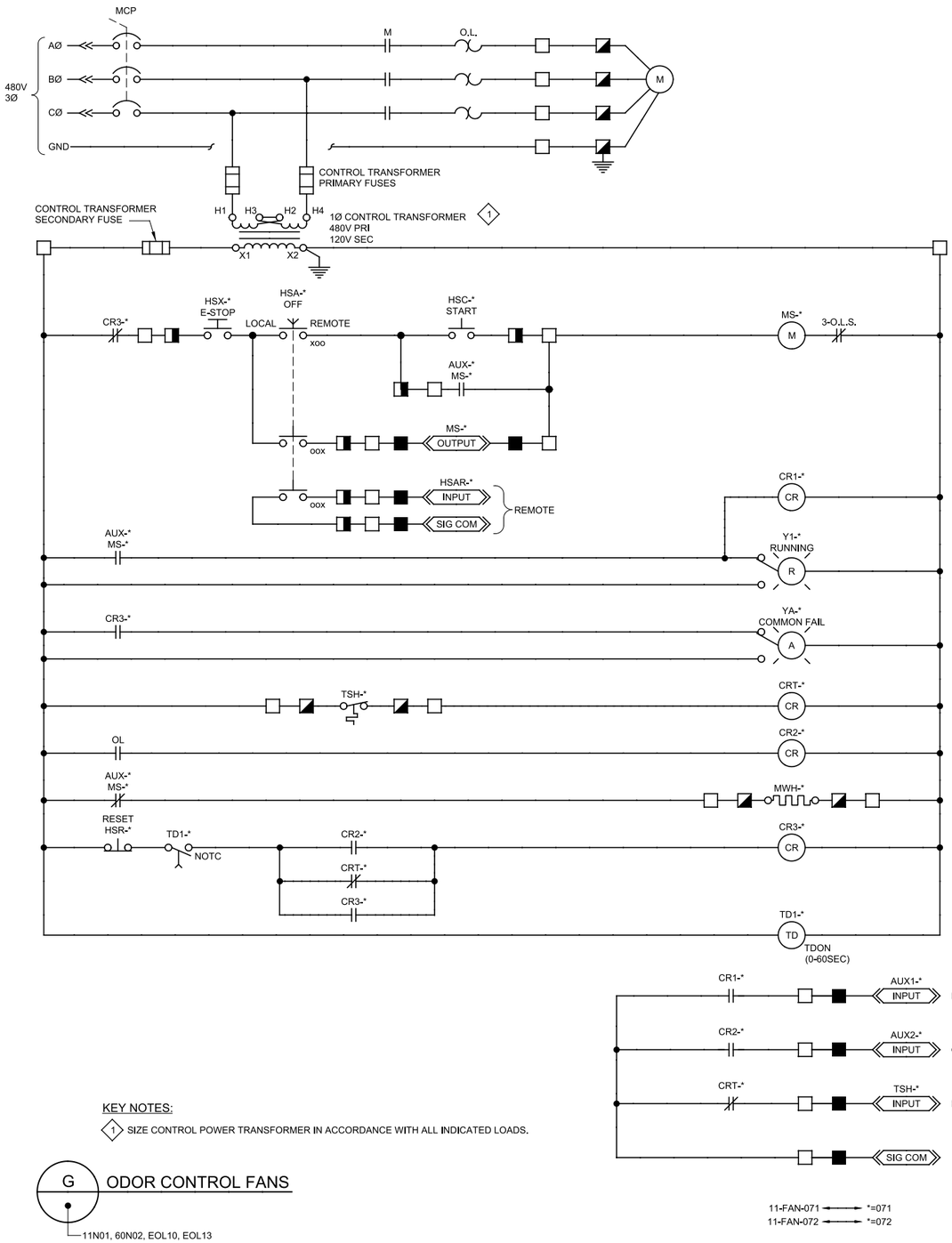

KEY NOTES:

1 SIZE CONTROL POWER TRANSFORMER IN ACCORDANCE WITH ALL INDICATED LOADS.

G ODOR CONTROL FANS

11N01, 60N02, EOL10, EOL13

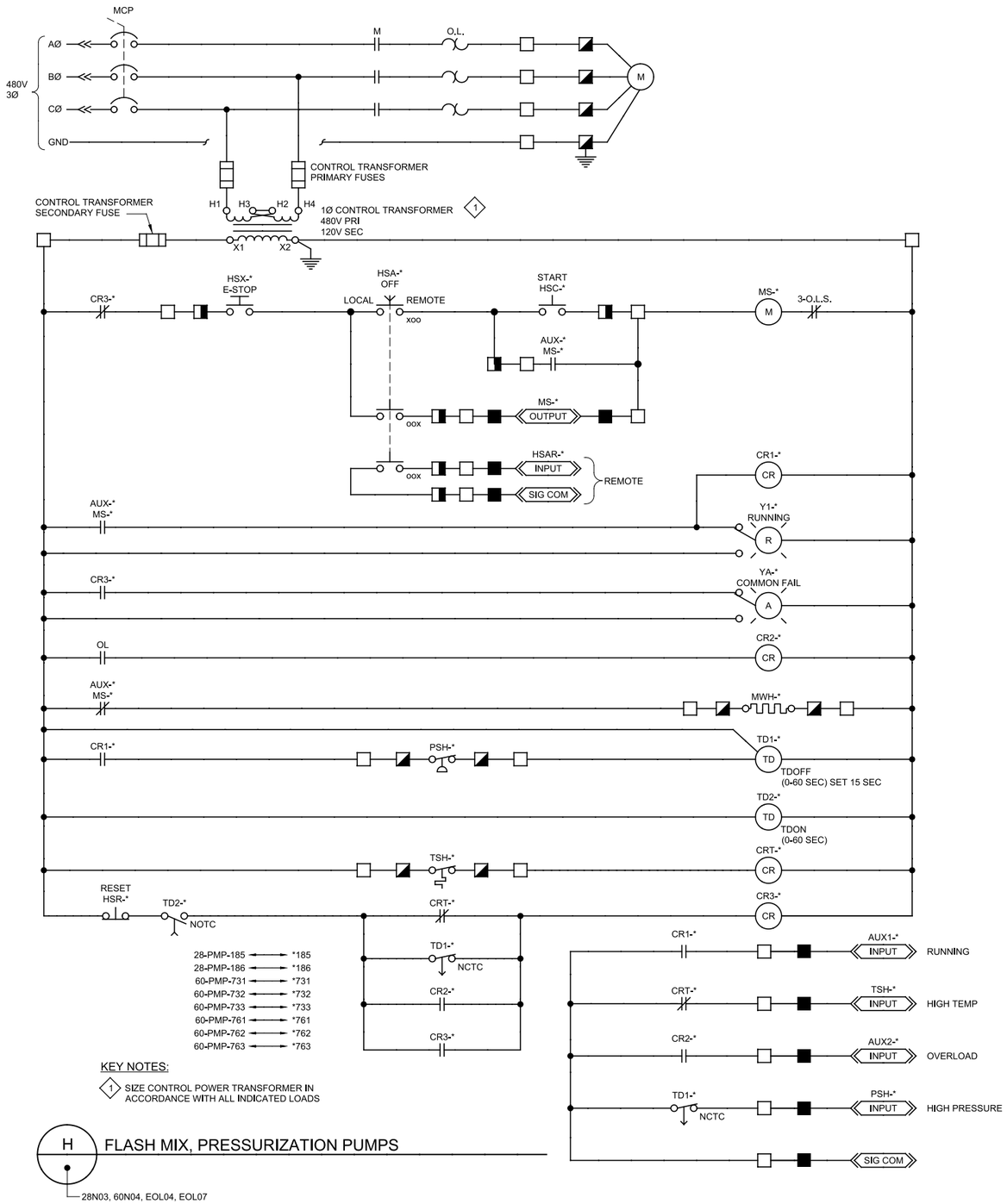

KEY NOTES:

1 SIZE CONTROL POWER TRANSFORMER IN ACCORDANCE WITH ALL INDICATED LOADS

H FLASH MIX, PRESSURIZATION PUMPS

28N03, 60N04, EOL04, EOL07

REV	DATE	BY	DESCRIPTION

DESIGNED PCK
DRAWN CGR
CHECKED RAM
DATE SEPT 2013

REGISTERED PROFESSIONAL ENGINEER CARLO A. TERRONI No. 18851 ELECTRICAL STATE OF CALIFORNIA 9/16/2013

carollo

SAN LUIS OBISPO COUNTY

SAN LUIS OBISPO COUNTY

LOS OSOS WATER RECYCLING FACILITY PROJECT

INSTRUMENTATION

CONTROL SCHEMATICS - 6

VERIFY SCALES
BAR IS ONE INCH ON ORIGINAL DRAWING
0 1"
IF NOT ONE INCH ON THIS SHEET, ADJUST SCALES ACCORDINGLY

JOB NO. 8930A.11
DRAWING NO. 00N16
SHEET NO. 403 OF 549

PROJECT NO. 8930A.11 FILE NAME: 8930A1100N016.dgn

Plot Date: 16-SEP-2013 6:09:40 PM
User: BRoepken
PlotScale: 2:1
DesignScript: Carollo_Std_Pen_v0905.pen
ColorTable: gshade.ctb
Model: Layout1
LAST SAVED BY: ejohnson

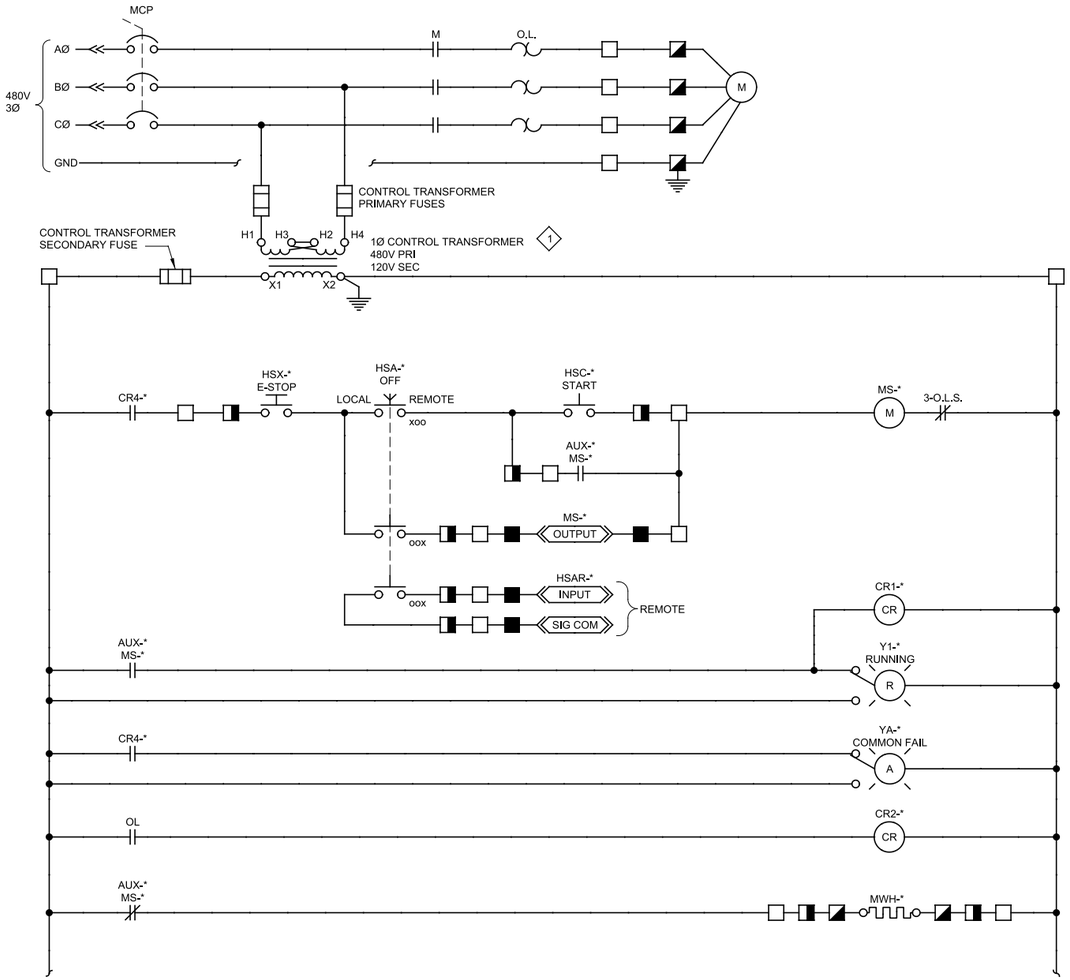

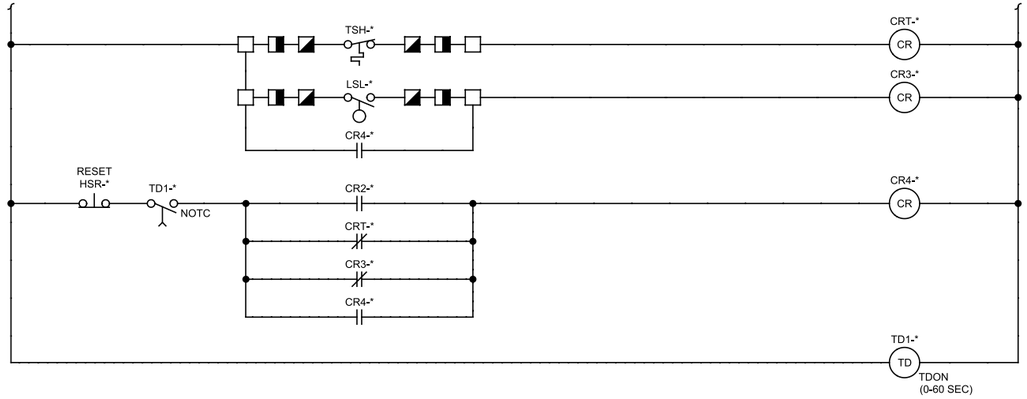

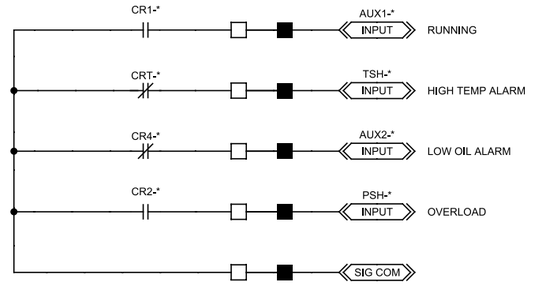

KEY NOTES:

1. SIZE CONTROL POWER TRANSFORMER IN ACCORDANCE WITH ALL INDICATED LOADS

I ANOXIC MIXERS

20N01, 20N02, EOL10, EOL13

20-MIX-090 ⟷ *=090
20-MIX-100 ⟷ *=100

REV	DATE	BY	DESCRIPTION

DESIGNED PCK
DRAWN CGR
CHECKED RAM
DATE SEPT 2013

REGISTERED PROFESSIONAL ENGINEER CARLO A. GROSSO No. 16851 ELECTRICAL STATE OF CALIFORNIA 9/16/2013

carollo

SAN LUIS OBISPO COUNTY

SAN LUIS OBISPO COUNTY
LOS OSOS WATER RECYCLING FACILITY PROJECT
INSTRUMENTATION
CONTROL SCHEMATICS - 7

VERIFY SCALES
BAR IS ONE INCH ON ORIGINAL DRAWING
0 1"
IF NOT ONE INCH ON THIS SHEET, ADJUST SCALES ACCORDINGLY

JOB NO. 8930A.11
DRAWING NO. 00N17
SHEET NO. 404 OF 549

PROJECT NO. 8930A.11 FILE NAME: 8930A1100N017.dgn

LAST SAVED BY: ejohnson PlotScale: 2:1 Model: Layout1 ColorTable: gshade.ctb DesignScript: Carollo_Std_Pen_v0905.pen User: BRoepken Plot Date: 16-SEP-2013 6:09:57 PM

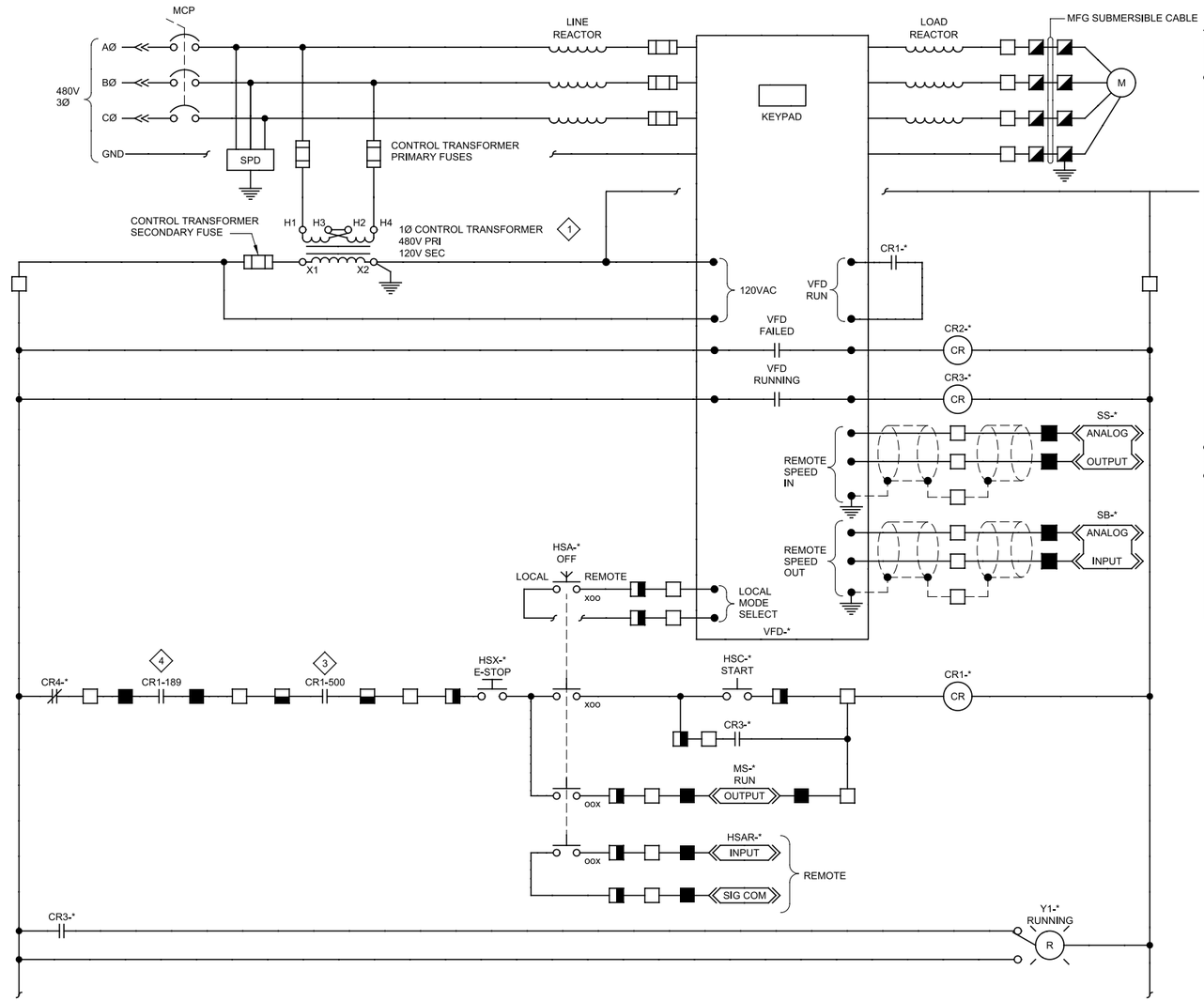

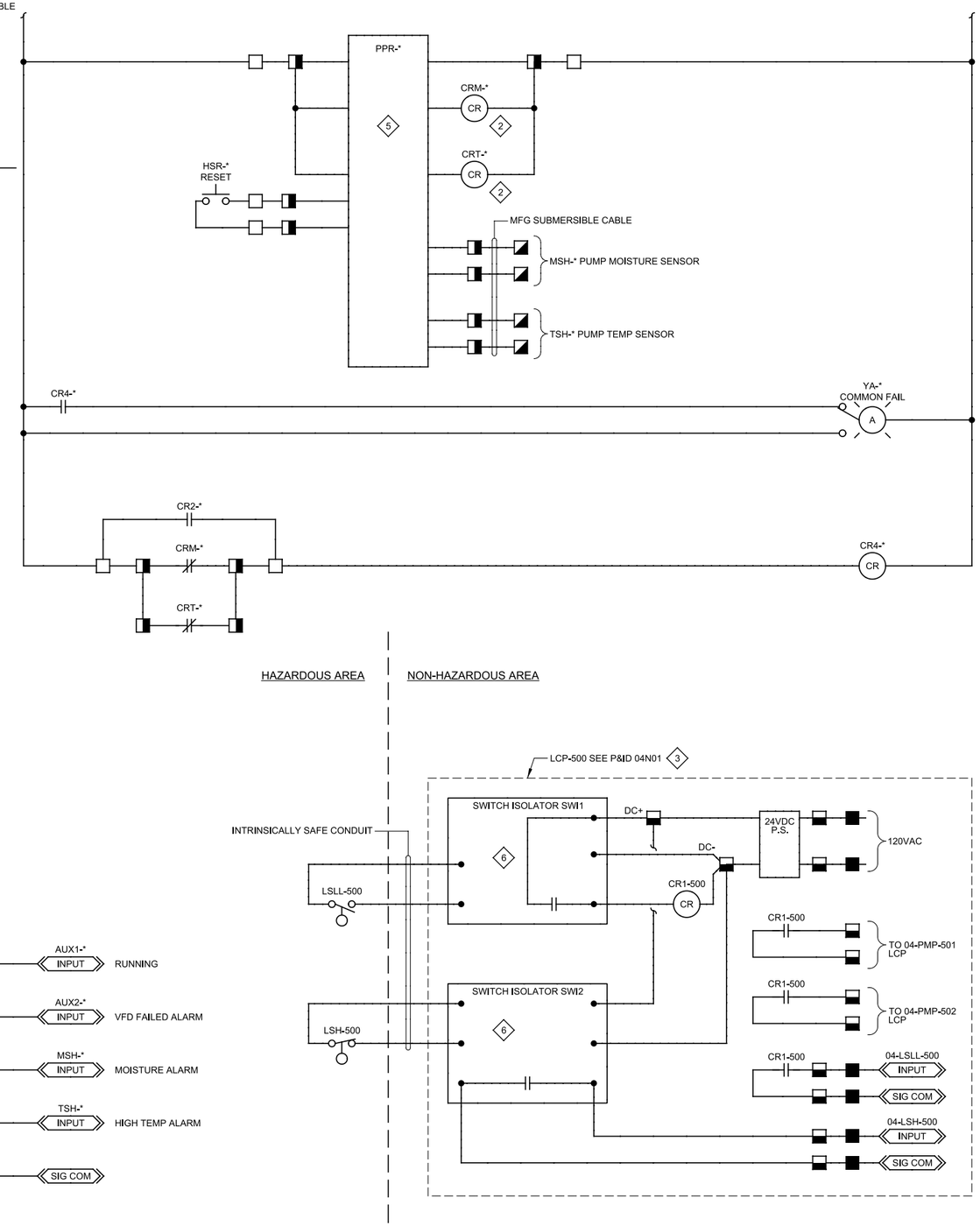

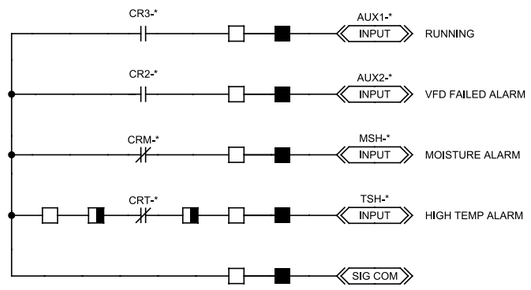

KEY NOTES:

1. SIZE CONTROL POWER TRANSFORMER IN ACCORDANCE WITH ALL INDICATED LOADS.
2. RELAY DE-ENERGIZES ON DETECTION OF FAULT CONDITION.
3. APPLICABLE FOR 04-PMP-501 AND 04-PMP-502 ONLY.
4. APPLICABLE FOR 28-PMP-181, 28-PMP-182, 28-PMP-183, AND 28-PMP-184 ONLY. SEE ALSO P&ID 28N01.
5. INSTALL AND WIRE PPR RELAY (FURNISHED BY PUMP SUPPLIER).
6. INTRINSIC SAFE BARRIER.

04-PMP-501	*501
04-PMP-502	*502
28-PMP-181	*181
28-PMP-182	*182
28-PMP-183	*183
28-PMP-184	*184

J — PLANT DRAIN PUMPS, FILTER INFLUENT PUMPS

04N01, 28N01, 28N02, EOL04, EOL07, EOL11, EOL14

REV	DATE	BY	DESCRIPTION

DESIGNED PCK
DRAWN CGR
CHECKED RAM
DATE SEPT 2013

REGISTERED PROFESSIONAL ENGINEER CARLO A. GRADY No. 18851 ELECTRICAL STATE OF CALIFORNIA 9/16/2013

carollo

SAN LUIS OBISPO COUNTY

SAN LUIS OBISPO COUNTY
LOS OSOS WATER RECYCLING FACILITY PROJECT
INSTRUMENTATION
CONTROL SCHEMATICS - 8

VERIFY SCALES
BAR IS ONE INCH ON ORIGINAL DRAWING
0 1"
IF NOT ONE INCH ON THIS SHEET, ADJUST SCALES ACCORDINGLY

JOB NO. 8930A.11
DRAWING NO. 00N18
SHEET NO. 405 OF 549

PROJECT NO. 8930A.11 FILE NAME: 8930A1100N018.dgn

Plot Date: 16-SEP-2013 6:10:15 PM
User: BRoepken
PlotScale: 2:1
DesignScript: Carollo_Std_Pen_v0905.pen
ColorTable: gshade.ctb
Model: Layout1
LAST SAVED BY: ejohnson

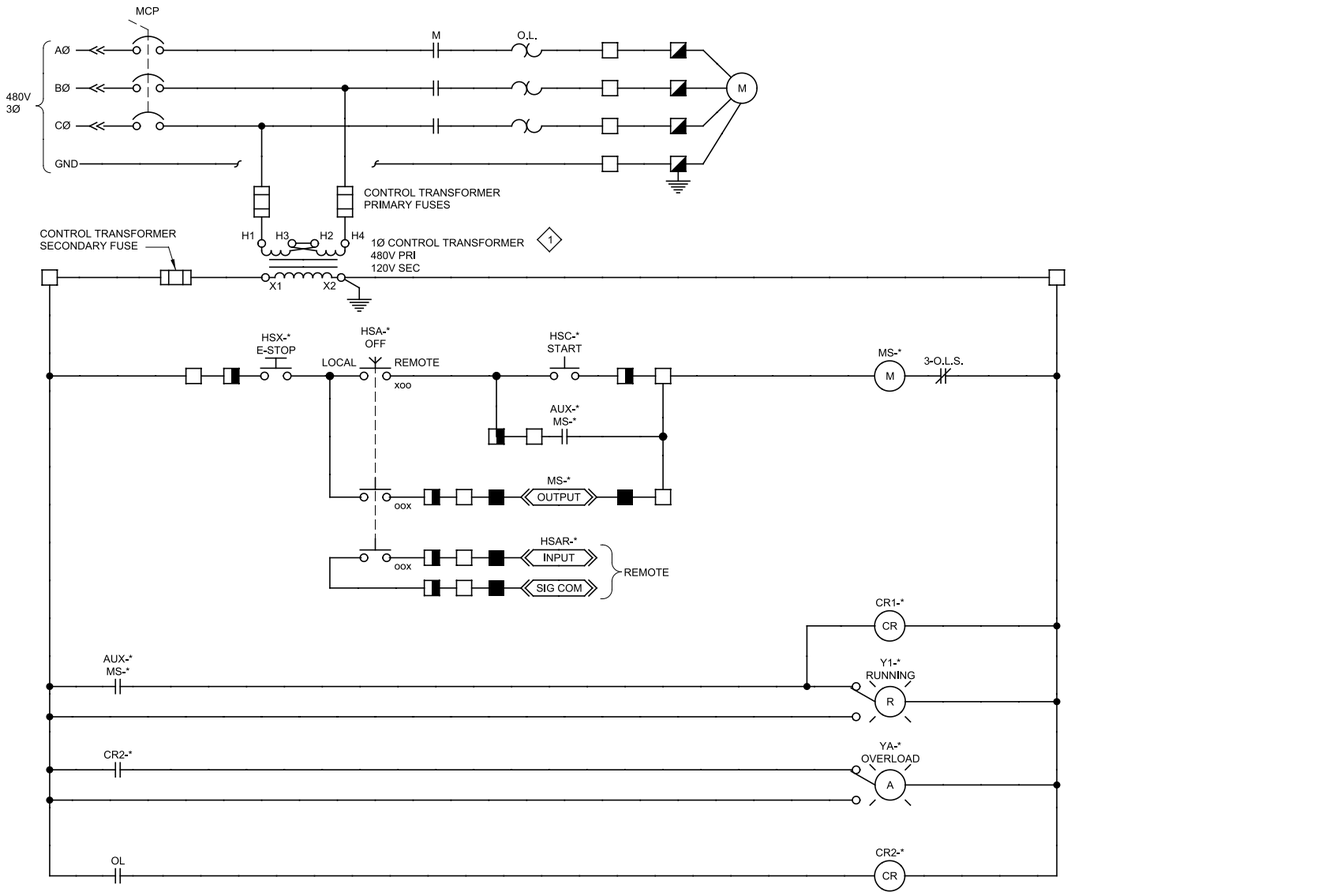

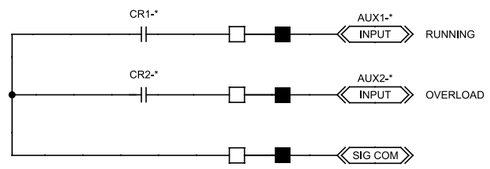

KEY NOTES:

1. SIZE CONTROL POWER TRANSFORMER IN ACCORDANCE WITH ALL INDICATED LOADS

60-PMP-711 → *=711
60-PMP-712 → *=712

K GROUND WATER WELL PUMPS

60N01, 60N02, EOL04, EOL07

REV	DATE	BY	DESCRIPTION

DESIGNED PCK
DRAWN CGR
CHECKED RAM
DATE SEPT 2013

REGISTERED PROFESSIONAL ENGINEER CARLO A. GRADO No. 15851 ELECTRICAL STATE OF CALIFORNIA 9/16/2013

carollo

SAN LUIS OBISPO COUNTY

SAN LUIS OBISPO COUNTY
LOS OSOS WATER RECYCLING FACILITY PROJECT
INSTRUMENTATION
CONTROL SCHEMATICS - 9

VERIFY SCALES
BAR IS ONE INCH ON ORIGINAL DRAWING
0 1"
IF NOT ONE INCH ON THIS SHEET, ADJUST SCALES ACCORDINGLY

JOB NO. 8930A.11
DRAWING NO. 00N19
SHEET NO. 406 OF 549

PROJECT NO. 8930A.11 FILE NAME: 8930A1100N019.dgn

Plot Date: 16-SEP-2013 6:10:32 PM
User: BRoepken
PlotScale: 2:1
DesignScript: Carollo_Std_Pen_v0905.pen
ColorTable: gshade.ctb
Model: Layout1
LAST SAVED BY: ejohnson

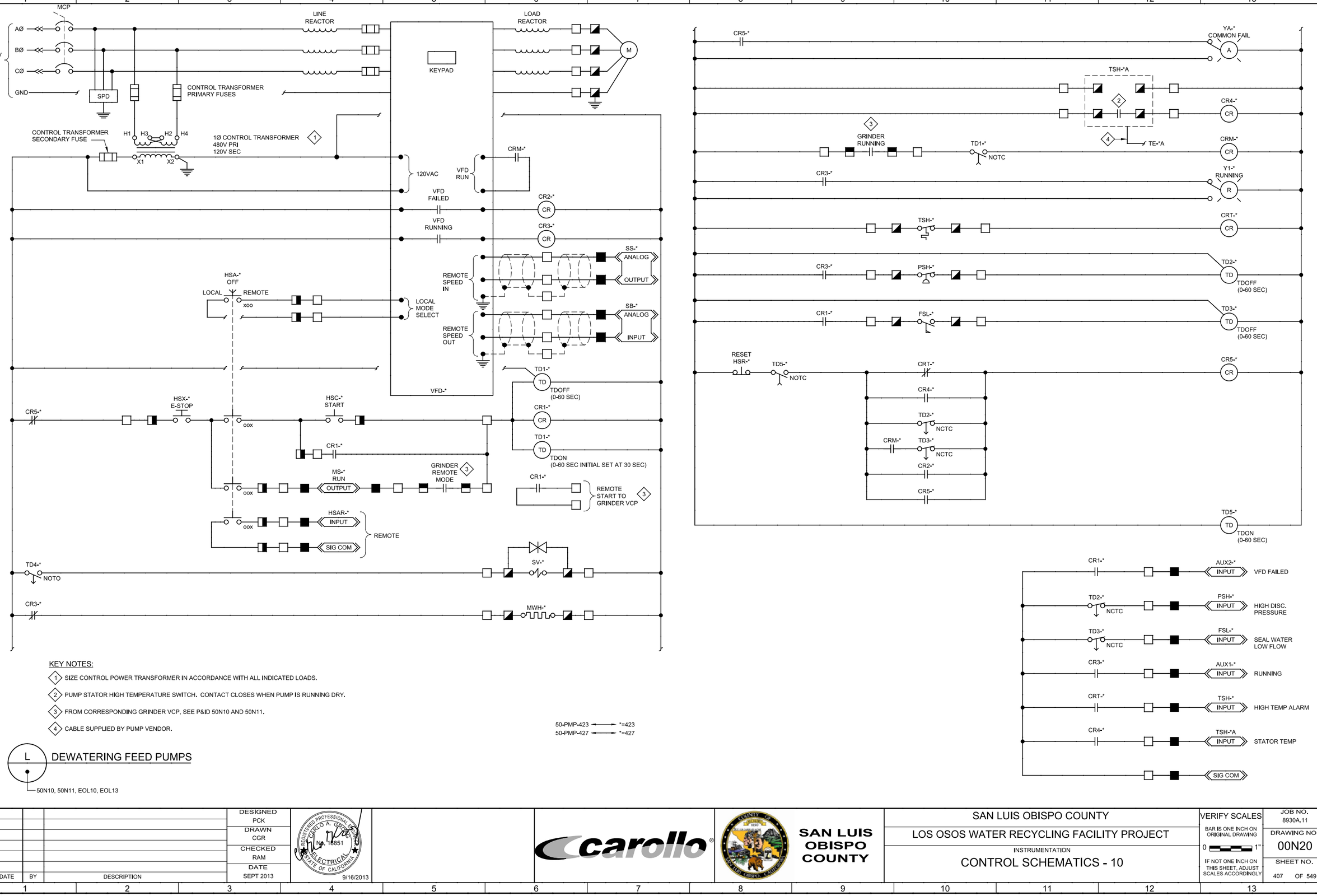

KEY NOTES:

1. SIZE CONTROL POWER TRANSFORMER IN ACCORDANCE WITH ALL INDICATED LOADS.
2. PUMP STATOR HIGH TEMPERATURE SWITCH. CONTACT CLOSES WHEN PUMP IS RUNNING DRY.
3. FROM CORRESPONDING GRINDER VCP, SEE P&ID 50N10 AND 50N11.
4. CABLE SUPPLIED BY PUMP VENDOR.

50-PMP-423 ⟷ *=423
50-PMP-427 ⟷ *=427

L DEWATERING FEED PUMPS

50N10, 50N11, EOL10, EOL13

REV	DATE	BY	DESCRIPTION

DESIGNED PCK
DRAWN CGR
CHECKED RAM
DATE SEPT 2013

REGISTERED PROFESSIONAL ENGINEER CARLO A. GRING No. 18851 ELECTRICAL STATE OF CALIFORNIA 9/16/2013

carollo

SAN LUIS OBISPO COUNTY

SAN LUIS OBISPO COUNTY
LOS OSOS WATER RECYCLING FACILITY PROJECT
INSTRUMENTATION
CONTROL SCHEMATICS - 10

VERIFY SCALES
BAR IS ONE INCH ON ORIGINAL DRAWING
0 1"
IF NOT ONE INCH ON THIS SHEET, ADJUST SCALES ACCORDINGLY

JOB NO. 8930A.11
DRAWING NO. 00N20
SHEET NO. 407 OF 549

PROJECT NO. 8930A.11 FILE NAME: 8930A1100N020.dgn

Plot Date: 16-SEP-2013 6:10:49 PM
User: BRoepken
PlotScale: 2:1
DesignScript: Carollo_Std_Pen_v0905.pen
ColorTable: gshade.ctb
Model: Layout1
LAST SAVED BY: ejohnson

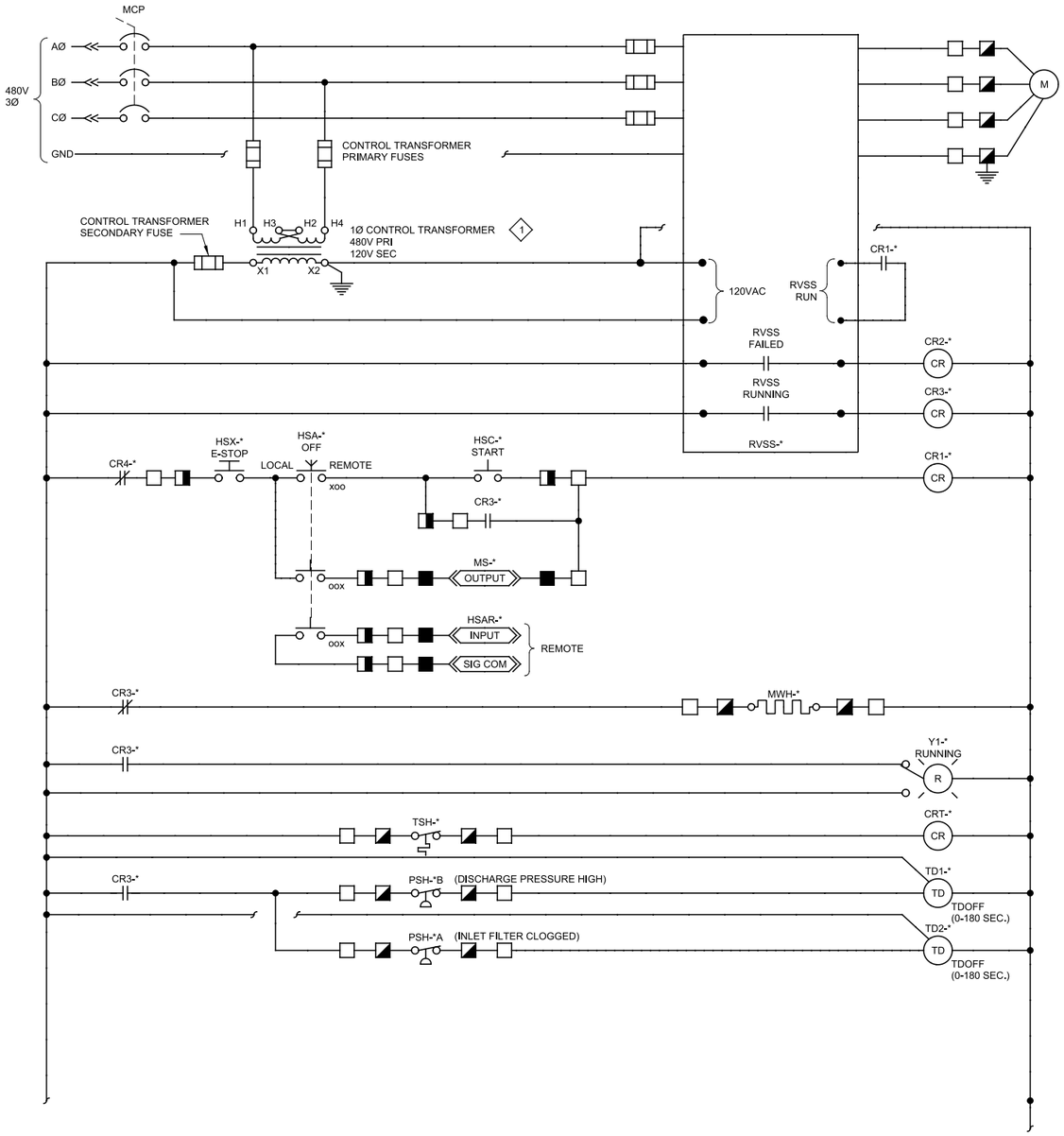

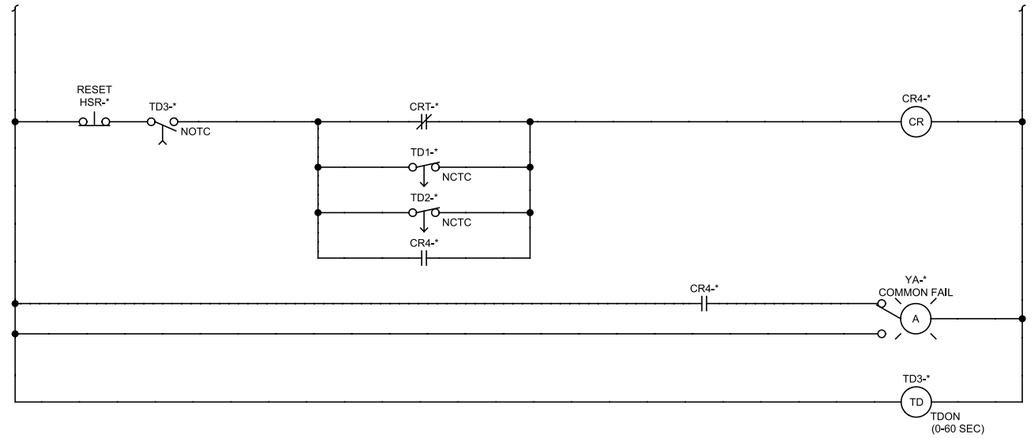

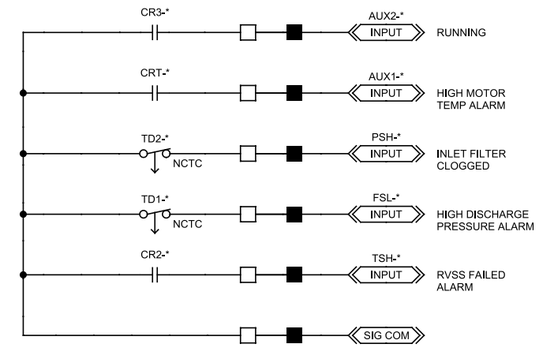

KEY NOTES:

1. SIZE CONTROL POWER TRANSFORMER IN ACCORDANCE WITH ALL INDICATED LOADS

M — SLUDGE AERATION BLOWERS

50N04, 50N05, 50N06, EOL10, EOL13

50-BLO-401 → *=401
50-BLO-402 → *=402
50-BLO-403 → *=403

REV	DATE	BY	DESCRIPTION

DESIGNED PCK
DRAWN CGR
CHECKED RAM
DATE SEPT 2013

REGISTERED PROFESSIONAL ENGINEER CARLO A. GRONNER No. 16851 ELECTRICAL STATE OF CALIFORNIA 9/16/2013

carollo

SAN LUIS OBISPO COUNTY

SAN LUIS OBISPO COUNTY
LOS OSOS WATER RECYCLING FACILITY PROJECT
INSTRUMENTATION
CONTROL SCHEMATICS - 11

VERIFY SCALES
BAR IS ONE INCH ON ORIGINAL DRAWING
0 1"
IF NOT ONE INCH ON THIS SHEET, ADJUST SCALES ACCORDINGLY

JOB NO. 8930A.11
DRAWING NO. 00N21
SHEET NO. 408 OF 549

PROJECT NO. 8930A.11 FILE NAME: 8930A1100N021.dgn

Plot Date: 16-SEP-2013 6:11:07 PM
User: BRoepken
PlotScale: 2:1
DesignScript: Carollo_Std_Pen_v0905.pen
ColorTable: gshade.ctb
Model: Layout1
LAST SAVED BY: ejohnson

Plot Date: 16-SEP-2013 6:11:24 PM
User: BRoepken
PlotScale: 2:1
DesignScript: Carollo_Std_Pen_v0905.pen
ColorTable: gshade.ctb
Model: Layout1
LAST SAVED BY: ejohnson

MCP
480V 3Ø
AØ
BØ
CØ
GND
SPD
LINE REACTOR
LOAD REACTOR
M
KEYPAD
CONTROL TRANSFORMER PRIMARY FUSES
CONTROL TRANSFORMER SECONDARY FUSE
H1 H3 H2 H4
X1 X2
1Ø CONTROL TRANSFORMER
480V PRI
120V SEC
1
120VAC
VFD RUN
TD1-*
NOTC
VFD FAILED
CR2-*
CR
VFD RUNNING
CR3-*
CR
HSA-*
OFF
LOCAL
REMOTE
xoo
LOCAL MODE SELECT
REMOTE SPEED IN
SS-*
ANALOG
OUTPUT
REMOTE SPEED OUT
SB-*
ANALOG
INPUT
VFD-*
TD1-*
TD
TDON
(0-60 SEC)
CR1-*
CR
TD4-*
TD
TDOFF
(0-60 SEC)
CR4-*
HSX-*
E-STOP
oox
HSC-*
START
CR1-*
MS-*
RUN
OUTPUT
oox
HSAR-*
INPUT
SIG COM
REMOTE
oox
TD4-*
NOTO
SV-*
CR1-*
MWH-*

CR7-*
YA-*
COMMON FAIL
A
CR3-*
Y1-*
RUNNING
R
TSH-*
CRT-*
CR
CR3-*
PSH-*
TD2-*
TD
TDOFF
(0-60 SEC)
CR1-*
FSL-*
TD3-*
TD
TDOFF
(0-120 SEC)
RESET
HSR-*
TD5-*
NOTC
CRT-*
CR4-*
CR
TD2-*
NCTC
TD3-*
NCTC
CR2-*
CR4-*
TD5-*
TD
TDON
(0-60 SEC)

CR1-*
AUX2-*
INPUT
VFD FAILED
CR3-*
AUX1-*
INPUT
RUNNING
CRT-*
TSH-*
INPUT
HIGH TEMP ALARM
TD2-*
NCTC
PSH-*
INPUT
HIGH DISC. PRESSURE
TD3-*
NCTC
FSL-*
INPUT
SEAL WATER LOW FLOW
SIG COM

50-PMP-121 ⟶ *=121
50-PMP-122 ⟶ *=122
50-PMP-123 ⟶ *=123

KEY NOTES:

1 SIZE CONTROL POWER TRANSFORMER IN ACCORDANCE WITH ALL INDICATED LOADS.

N RAS/WAS PUMPS
50N02, 50N02A, EOL10, EOL14

REV	DATE	BY	DESCRIPTION

DESIGNED PCK
DRAWN CGR
CHECKED RAM
DATE SEPT 2013

REGISTERED PROFESSIONAL ENGINEER CARLO A. GRONG No. 18851 ELECTRICAL STATE OF CALIFORNIA 9/16/2013

carollo

SAN LUIS OBISPO COUNTY

SAN LUIS OBISPO COUNTY
LOS OSOS WATER RECYCLING FACILITY PROJECT
INSTRUMENTATION
CONTROL SCHEMATICS - 12

VERIFY SCALES
BAR IS ONE INCH ON ORIGINAL DRAWING
0 1"
IF NOT ONE INCH ON THIS SHEET, ADJUST SCALES ACCORDINGLY

JOB NO. 8930A.11
DRAWING NO. 00N22
SHEET NO. 409 OF 549

PROJECT NO. 8930A.11 FILE NAME: 8930A1100N022.dgn

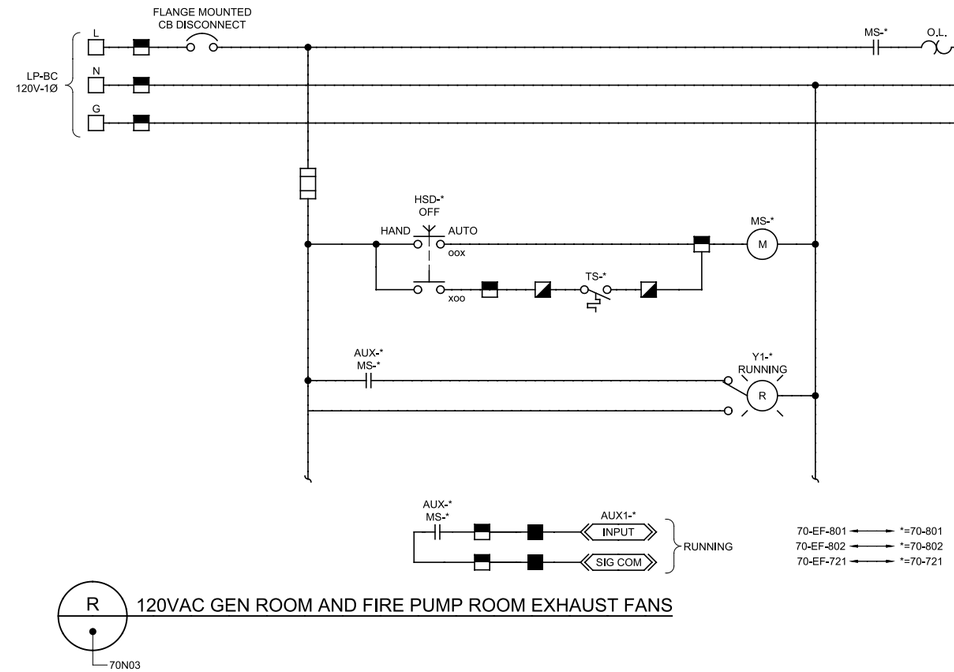

R 120VAC GEN ROOM AND FIRE PUMP ROOM EXHAUST FANS

70N03

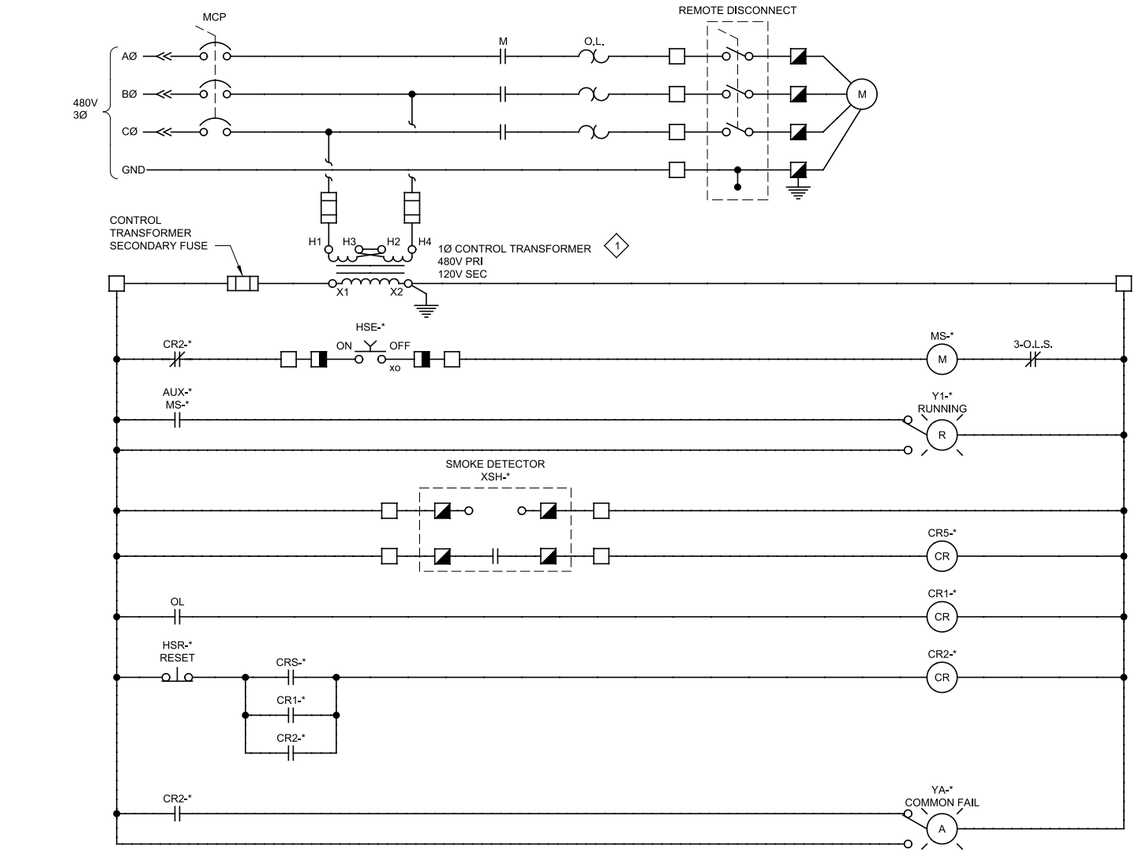

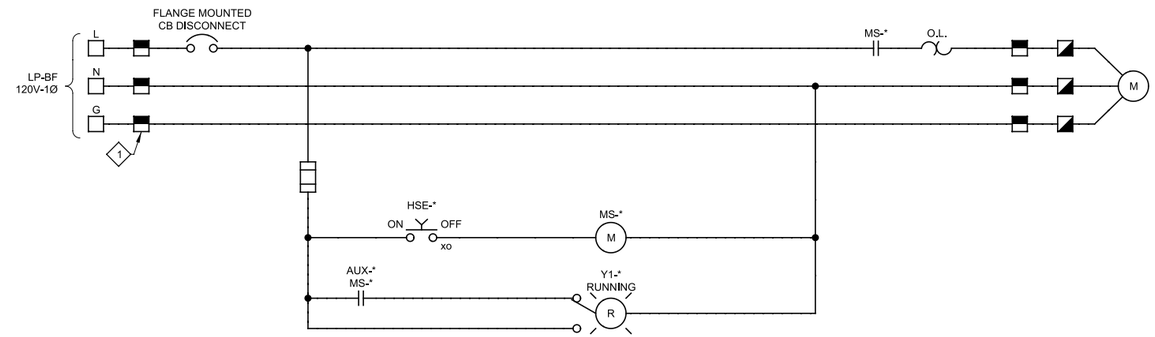

KEY NOTES:

1 PROVIDE NEAM 4X, 316 STAINLESS STEEL ENCLOSURE FOR STARTER.

O 120VAC DEWATERING BUILDING FANS

51N08

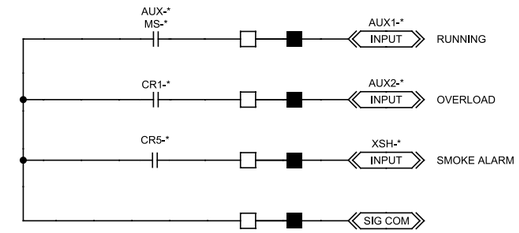

KEY NOTES:

1 SIZE CONTROL POWER TRANSFORMER IN ACCORDANCE WITH ALL INDICATED LOADS.

51-EF-473 *=473
51-EF-474 *=474
51-EF-475 *=475
51-EF-476 *=476

P 480VAC DEWATERING BLDG EXHAUST FANS

51N08, 51N09, EOL10, EOL11, EOL14

REV	DATE	BY	DESCRIPTION

DESIGNED PCK
DRAWN CGR
CHECKED RAM
DATE SEPT 2013

REGISTERED PROFESSIONAL ENGINEER CARLO A. GROSSO No. 16851 ELECTRICAL STATE OF CALIFORNIA 9/16/2013

carollo

SAN LUIS OBISPO COUNTY

SAN LUIS OBISPO COUNTY

LOS OSOS WATER RECYCLING FACILITY PROJECT

INSTRUMENTATION

CONTROL SCHEMATICS - 13

VERIFY SCALES
BAR IS ONE INCH ON ORIGINAL DRAWING
0 1"
IF NOT ONE INCH ON THIS SHEET, ADJUST SCALES ACCORDINGLY

JOB NO. 8930A.11
DRAWING NO. 00N23
SHEET NO. 410 OF 549

PROJECT NO. 8930A.11 FILE NAME: 8930A1100N023.dgn

Plot Date: 16-SEP-2013 6:11:41 PM
User: BRoepken
PlotScale: 2:1
DesignScript: Carollo_Std_Pen_v0905.pen
ColorTable: gshade.ctb
Model: Layout1
LAST SAVED BY: ejohnson

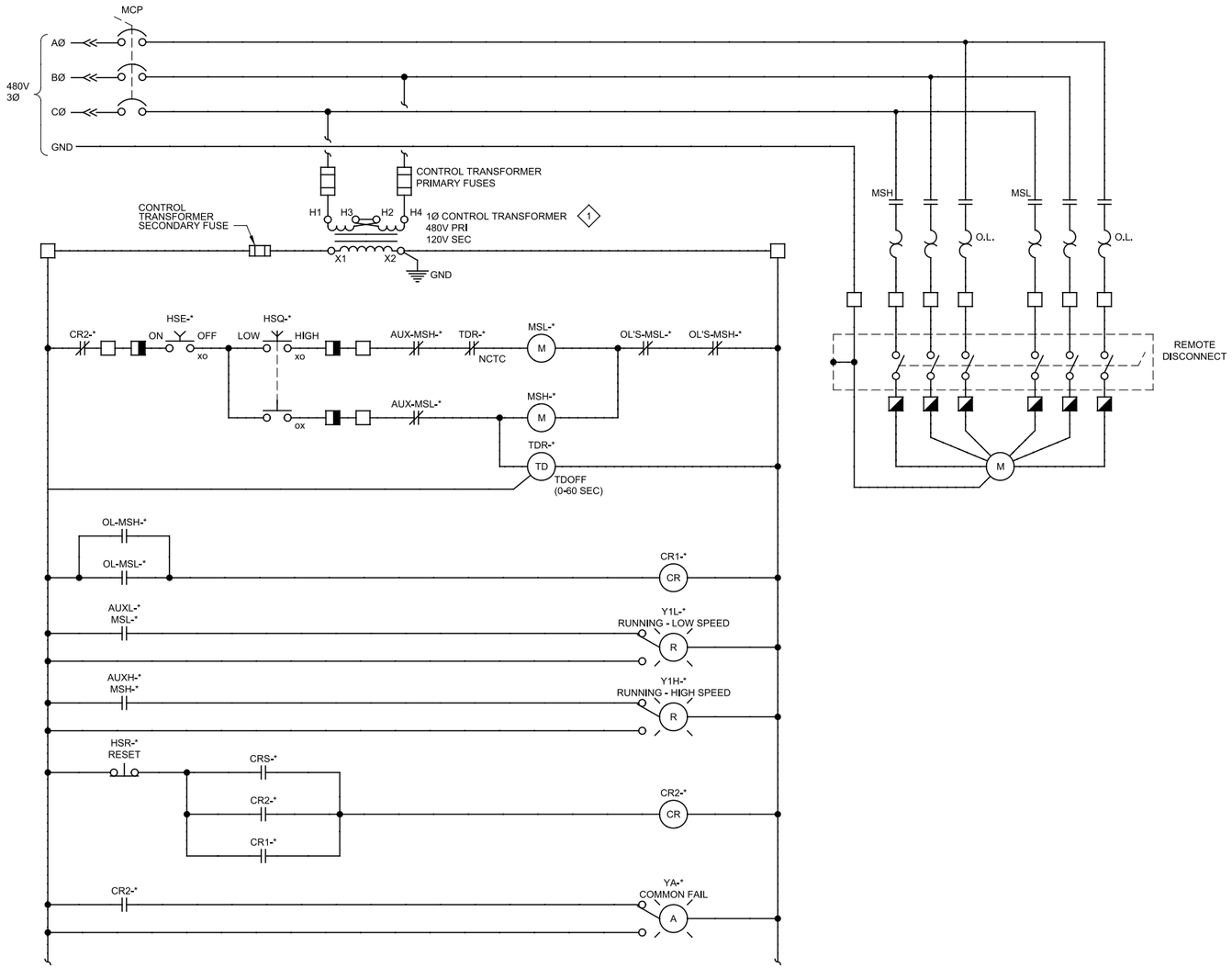

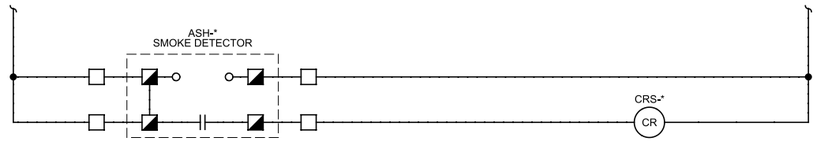

KEY NOTES:

1 SIZE CONTROL POWER TRANSFORMER IN ACCORDANCE WITH ALL INDICATED LOADS.

Q 480VAC SUPPLY FAN

51N09, EOL10

51-SF-477 ◄——► *=477

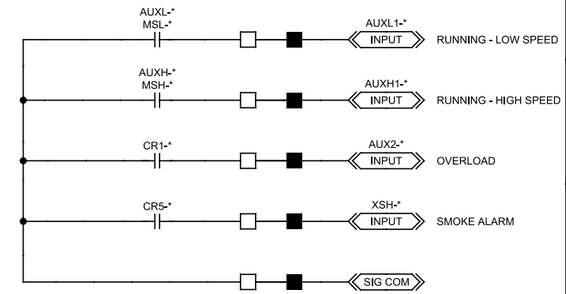

REV	DATE	BY	DESCRIPTION

DESIGNED PCK
DRAWN CGR
CHECKED RAM
DATE SEPT 2013

REGISTERED PROFESSIONAL ENGINEER CARLO A. GROSSNER No. 16851 ELECTRICAL STATE OF CALIFORNIA 9/16/2013

carollo

SAN LUIS OBISPO COUNTY

SAN LUIS OBISPO COUNTY

LOS OSOS WATER RECYCLING FACILITY PROJECT

INSTRUMENTATION

CONTROL SCHEMATICS - 14

VERIFY SCALES
BAR IS ONE INCH ON ORIGINAL DRAWING
0 1"
IF NOT ONE INCH ON THIS SHEET, ADJUST SCALES ACCORDINGLY

JOB NO. 8930A.11
DRAWING NO. 00N24
SHEET NO. 411 OF 549

PROJECT NO. 8930A.11 FILE NAME: 8930A1100N024.dgn

Plot Date: 16-SEP-2013 6:11:58 PM
User: BRoepken
PlotScale: 2:1
DesignScript: Carollo_Std_Pen_v0905.pen
ColorTable: gshade.ctb
Model: Layout1
LAST SAVED BY: ejohnson

SCADA

CONTROL PANEL — PLC I/O

CONTROL PANEL — OPERATOR INTERFACE/ CONTROL DEVICES

POWER SOURCE

FIELD

YR 321 STATUS REMOTE
YOC 321 STATUS OC
HAO 321 ACTION OC
MSO 321 DO OPEN PLC-2
MSC 321 DO CLOSE PLC-2
HSAR 321 DI REMOTE PLC-2
ZSO 321 DI OPENED PLC-2
ZSC 321 DI CLOSED PLC-2
CB 321 TM 480VAC-3P MCC-E
ZSOC 321
OSC
HSG 321
LOR
HSA 321
EDR 321
DISC 321

YR 324 STATUS REMOTE
YOC 324 STATUS OC
HAO 324 ACTION OC
MSO 324 DO OPEN PLC-2
MSC 324 DO CLOSE PLC-2
HSAR 324 DI REMOTE PLC-2
ZSO 324 DI OPENED PLC-2
ZSC 324 DI CLOSED PLC-2
CB 324 TM 480VAC-3P MCC-F
ZSOC 324
OSC
HSG 324
LOR
HSA 324
EDR 324
DISC 324

LAL 326 ALARM
QLL 326 SP
QL1 326 SP STOP
LAH 326 ALARM
QLH 326 SP
LR 326 TREND
LI 326 NUM
EFFLUENT PUMP
AI L 326 PLC-2
CB 326 TM 120VAC-1P PCM-2
LIT 326
LE 326

YR 323 STATUS REMOTE
YOC 323 STATUS OC
HAO 323 ACTION OC
MSO 323 DO OPEN PLC-2
MSC 323 DO CLOSE PLC-2
HSAR 323 DI REMOTE PLC-2
ZSO 323 DI OPENED PLC-2
ZSC 323 DI CLOSED PLC-2
CB 323 TM 480VAC-3P MCC-E
ZSOC 323
OSC
HSG 323
LOR
HSA 323
EDR 323
DISC 323

YR 322 STATUS REMOTE
YOC 322 STATUS OC
HAO 322 ACTION OC
MSO 322 DO OPEN PLC-2
MSC 322 DO CLOSE PLC-2
HSAR 322 DI REMOTE PLC-2
ZSO 322 DI OPENED PLC-2
ZSC 322 DI CLOSED PLC-2
FUTURE
CB 322 TM 480VAC-3P MCC-E
ZSOC 322
OSC
HSG 322
LOR
HSA 322
EDR 322
DISC 322

LAL 327 ALARM
QLL 327 SP
LAH 327 ALARM
QLH 327 SP
QL1 327 SP STOP
LR 327 TREND
LI 327 NUM
EFFLUENT PUMP
AI L 327 PLC-2
CB 327 TM 120VAC-1P PCM-2
LIT 327
LE 327

YR 325 STATUS REMOTE
YOC 325 STATUS OC
HAO 325 ACTION OC
MSO 325 DO OPEN PLC-2
MSC 325 DO CLOSE PLC-2
HSAR 325 DI REMOTE PLC-2
ZSO 325 DI OPENED PLC-2
ZSC 325 DI CLOSED PLC-2
CB 325 TM 480VAC-3P MCC-F
ZSOC 325
OSC
HSG 325
LOR
HSA 325
EDR 325
DISC 325

GENERAL NOTES

1. ALL EQUIPMENT AND INSTRUMENT TAGGING ON THIS SHEET SHALL BE PRECEDED WITH FACILITY INDEX NO. 03 WHICH IS NOT SHOWN FOR CLARITY.

GAT 321
GAT 323
GAT 322
GAT 324
GAT 325
REW POND 1
REW POND 2
FI 289A
FI 289B
24" REW
NC
CHEMICAL FACILITY
A 32N09 03N01
1/2" SHS
UV FACILITY
C 31N01 03N01
EFFLUENT PUMP STATION
A 03N01 40N02
FUTURE OFFSITE REW POND
EFFLUENT PUMP STATION
A 03N01 40N01
FUTURE OFFSITE REW POND

FI-289A ROTOMETER 0-24 GPH
FI-289B ROTOMETER 0-24 GPH
EDR-321 REW POND 1 INLET GATE
EDR-324 REW POND 2 INLET GATE
LE-326 ULTRASONIC LEVEL METER 0-16 FT NL180 TYP
EDR-323 REW POND 1 OUTLET GATE
EDR-322 REW POND 1 INLET GATE FROM POND 3
LE-327 ULTRASONIC LEVEL METER 0-16 FT NL180 TYP
EDR-325 REW POND 2 OUTLET GATE

REV	DATE	BY	DESCRIPTION

DESIGNED PCK
DRAWN CGR
CHECKED RAM
DATE SEPT 2013

REGISTERED PROFESSIONAL ENGINEER CARLO A. GRECO No. 18851 ELECTRICAL STATE OF CALIFORNIA 9/16/2013

carollo

COUNTY OF SAN LUIS OBISPO CALIFORNIA

SAN LUIS OBISPO COUNTY

SAN LUIS OBISPO COUNTY

LOS OSOS WATER RECYCLING FACILITY PROJECT

INSTRUMENTATION

REW POND STRUCTURES

VERIFY SCALES
BAR IS ONE INCH ON ORIGINAL DRAWING
0 1"
IF NOT ONE INCH ON THIS SHEET, ADJUST SCALES ACCORDINGLY

JOB NO. 8930A.11
DRAWING NO. 03N01
SHEET NO. 412 OF 549

LAST SAVED BY: broepken

PROJECT NO. 8930A.11 FILE NAME: 8930A1103N001.dwg

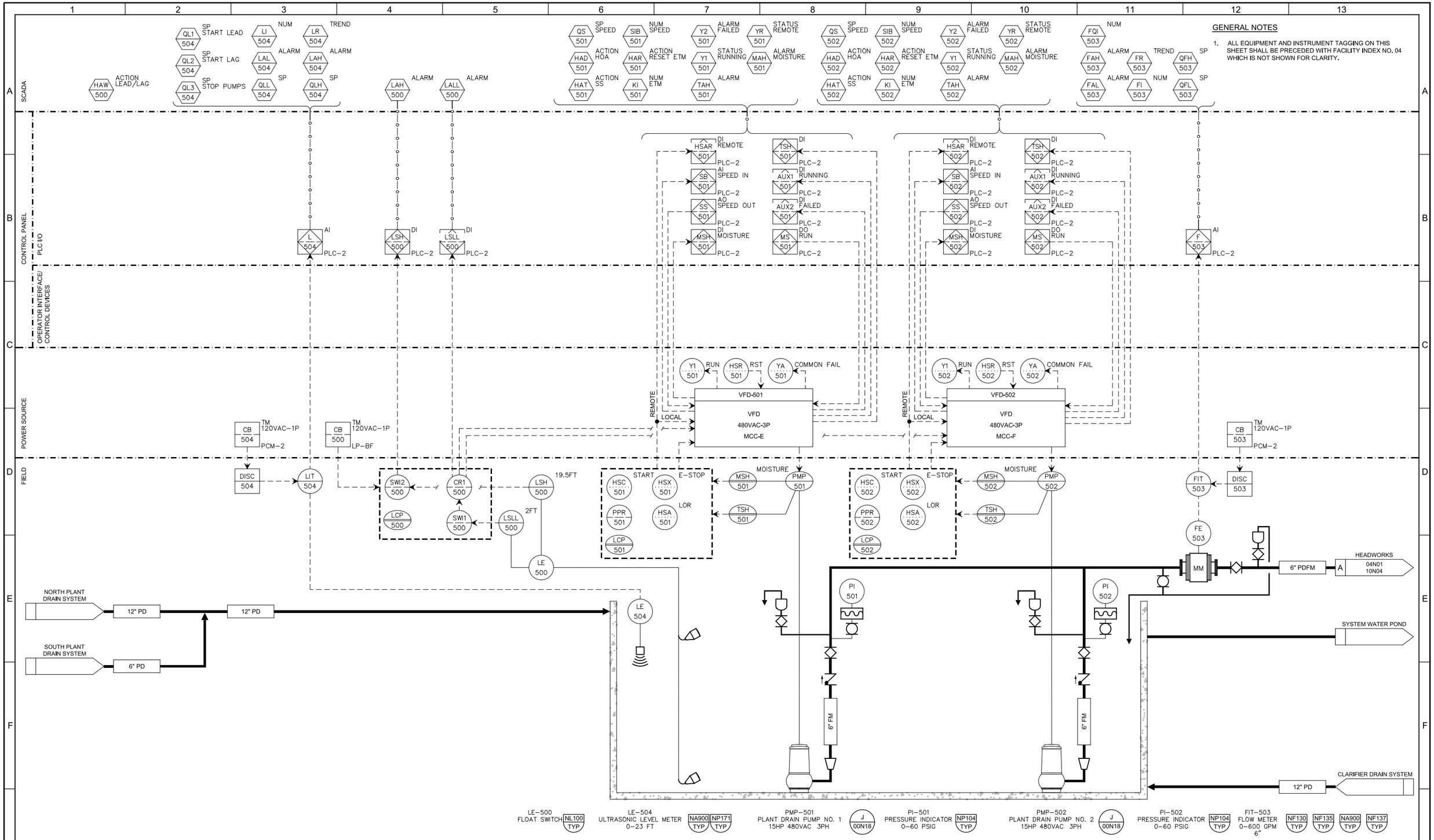

GENERAL NOTES

1. ALL EQUIPMENT AND INSTRUMENT TAGGING ON THIS SHEET SHALL BE PRECEDED WITH FACILITY INDEX NO. 04 WHICH IS NOT SHOWN FOR CLARITY.

REV	DATE	BY	DESCRIPTION

DESIGNED PCK
DRAWN CGR
CHECKED RAM
DATE SEPT 2013

REGISTERED PROFESSIONAL ENGINEER CARLO A. GROSS No. 18851 ELECTRICAL STATE OF CALIFORNIA
9/16/2013

carollo

SAN LUIS OBISPO COUNTY

SAN LUIS OBISPO COUNTY
LOS OSOS WATER RECYCLING FACILITY PROJECT
INSTRUMENTATION
PLANT DRAIN PUMP STATION

VERIFY SCALES
BAR IS ONE INCH ON ORIGINAL DRAWING
0 1"
IF NOT ONE INCH ON THIS SHEET, ADJUST SCALES ACCORDINGLY

JOB NO. 8930A.11
DRAWING NO. 04N01
SHEET NO. 413 OF 549

LAST SAVED BY: broepken

PROJECT NO. 8930A.11 FILE NAME: 8930A1104N001.dwg

SCADA

CONTROL PANEL
PLC I/O

OPERATOR INTERFACE/
CONTROL DEVICES

POWER
SOURCE

FIELD

HAJ 600 ACTION LS

LAH 603 ALARM

LALL 603 ALARM

YR 601 STATUS REMOTE
Y2 601 ALARM FAILED
HAR 601 ACTION RESET ETM
MAH 601 ALARM
HAD 601 ACTION HO
Y1 601 STATUS RUNNING
KI 601 NUM ETM
TAH 601 ALARM
HAT 601 ACTION SS

YR 602 STATUS REMOTE
Y2 602 ALARM FAILED
HAR 602 ACTION RESET ETM
MAH 602 ALARM
HAD 602 ACTION HO
Y1 602 STATUS RUNNING
KI 602 NUM ETM
TAH 602 ALARM
HAT 602 ACTION SS

QL1 600 SP
START
QL2 600 SP
STOP
LI 600 NUM
LAL 600 ALARM
QLL 600 SP
LR 600 TREND
LAH 600 ALARM
QLH 600 SP

FQI 603 NUM
FAH 603 ALARM
FR 603 TREND
QFH 603 SP
FAL 603 ALARM
FI 603 NUM
QFL 603 SP

LSH 603 DI PLC-2
LSLL 603 DI PLC-2

MSH 601 DI PLC-2
TSH 601 DI PLC-2
HSAR 601 DI REMOTE PLC-2
AUX2 601 DI OL PLC-2
AUX1 601 DI RUNNING PLC-2
MS 601 DO RUN PLC-2

MSH 602 DI PLC-2
TSH 602 DI PLC-2
HSAR 602 DI REMOTE PLC-2
AUX2 602 DI OL PLC-2
AUX1 602 DI RUNNING PLC-2
MS 602 DO RUN PLC-2

L 600 AI PLC-2
F 603 AI PLC-2

Y1 601 RUNNING
YA 601 COMMON FAIL
HSR 601 RST

MS-601
FVNR
480VAC-3P
MCC-E

Y1 602 RUNNING
YA 602 COMMON FAIL
HSR 602 RST

MS-602
FVNR
480VAC-3P
MCC-F

CB 603 TM 120VAC-1P PCM-2

CB 600 TM 120VAC-1P PCM-2

CB 603 TM 120VAC-1P PCM-2

SWI2 603
CR1 603
LCP 603
SWI1 603
LSH 603 12FT
LSLL 603 2FT
LE 603

HSC 601 START
HSX 601 E-STOP
PPR 601
HSA 601 LOR
LCP 601

MSH 601 MOISTURE
PMP 601
TSH 601

HSC 602 START
HSX 602 E-STOP
PPR 602
HSA 602 LOR
LCP 602

MSH 602 MOISTURE
PMP 602
TSH 602

LIT 600
DISC 600
LE 600

FIT 603
DISC 603
FE 603

PI 601

PI 602

MM

4" STW

INFLUENT SPLITTER BOX
A 04N02 20N01

20" PD

12" SD

STORM WATER
RETENTION POND

LE-603 FLOAT SWITCH NL100 TYP

PMP-601 STORM WATER PUMP NO. 1 D 00N13

PI-601 PRESSURE INDICATOR 0-30 PSIG NP104 TYP

PMP-602 STORM WATER PUMP NO. 2 D 00N13

PI-602 PRESSURE INDICATOR 0-30 PSIG NP104 TYP

LE-600 ULTRASONIC LEVEL METER 0-20 FT NP104 TYP NA900 TYP

FE-603 FLOW METER 0-200 GPM 4" NA900 TYP NF130 TYP NF135 TYP NF137 TYP

GENERAL NOTES

1. ALL EQUIPMENT AND INSTRUMENT TAGGING ON THIS SHEET SHALL BE PRECEDED WITH FACILITY INDEX NO. 04, WHICH IS NOT SHOWN FOR CLARITY.

REV	DATE	BY	DESCRIPTION

DESIGNED CAG
DRAWN CGR
CHECKED RAM
DATE SEPT 2013

REGISTERED PROFESSIONAL ENGINEER CARLO A. GROSSINI No. 16851 ELECTRICAL STATE OF CALIFORNIA
9/16/2013

SAN LUIS OBISPO COUNTY

SAN LUIS OBISPO COUNTY
LOS OSOS WATER RECYCLING FACILITY PROJECT
INSTRUMENTATION
STORM WATER PUMP STATION

VERIFY SCALES
BAR IS ONE INCH ON ORIGINAL DRAWING
0 1"
IF NOT ONE INCH ON THIS SHEET, ADJUST SCALES ACCORDINGLY

JOB NO. 8930A.11
DRAWING NO. 04N02
SHEET NO. 414 OF 549

LAST SAVED BY: broepken

PROJECT NO. 8930A.11 FILE NAME: 8930A1104N002.dwg

SCADA

HAL 040 ACTION OLOL CHANNEL 1
HAW 040 ACTION LEAD/LAG CHANNEL 1
HAL 050 ACTION OLOL CHANNEL 2
HAW 050 ACTION LEAD/LAG CHANNEL 2
QFH 010 SP
QFL 010 SP
FAH 010 ALARM
FR 010 TREND
FAL 010 ALARM
FI 010 NUM
Y2 011 ALARM FAILED
LAL 012 ALARM
QLH 012 SP
LR 012 OPEN LAG TREND
LAHH 012 ALARM BYPASS
LD3A 012 ALARM HI DIFF LVL
LD4A 012 ALARM HI DIFF LVL
QLL 012 SP
QLD3 012 SP HI DIFF LVL
QLD4 012 SP HI DIFF LVL
LAH 012 ALARM
LI 012 NUM
QLHH 012 SP
LDI3 012 OPEN LAG NUM DIFF LVL
LDI4 012 OPEN LAG NUM DIFF LVL
YR 041 STATUS REMOTE
HAD 041 ACTION HOA
YOC 041 STATUS OC
HAO 041 ACTION OC
YR 051 STATUS REMOTE
HAD 051 ACTION HOA
YOC 051 STATUS OC
HAO 051 ACTION OC
QLL 041 SP
LAH 041 ALARM
LD1A 041 ALARM HI DIFF LVL
QLH 041 SP
LR 041 TREND
QLD1 041 SP HI DIFF LVL
LI 041 NUM
LAL 041 ALARM
LDI1 041 OPEN LAG NUM DIFF LVL
QLL 051 SP
LAH 051 ALARM
LD2A 051 ALARM HI DIFF LVL
QLH 051 SP
LR 051 TREND
QLD2 051 SP HI DIFF LVL
LI 051 NUM
LAL 051 ALARM
LDI2 051 OPEN LAG NUM DIFF LVL

GENERAL NOTES

1. ALL EQUIPMENT AND INSTRUMENT TAGGING ON THIS SHEET SHALL BE PRECEDED WITH FACILITY INDEX NO. 10, WHICH IS NOT SHOWN FOR CLARITY.

CONTROL PANEL

PLC I/O

F 010 AI PLC–2
F 011 AO PLC–2
AUX2 011 DI FAILED PLC–2
L 012 AI PLC–2
MSO 041 DO OPEN PLC–2
MSC 041 DO CLOSE PLC–2
HSAR 041 DI REMOTE PLC–2
ZSO 041 DI OPENED PLC–2
ZSC 041 DI CLOSED PLC–2
MSO 051 DO OPEN PLC–2
MSC 051 DO CLOSE PLC–2
HSAR 051 DI REMOTE PLC–2
ZSO 051 DI OPENED PLC–2
ZSC 051 DI CLOSED PLC–2
L 041 AI PLC–2
L 051 AI PLC–2

DIFFERENTIAL LEVEL (DL3) A 10N01 10N04
DIFFERENTIAL LEVEL (DL4) B 10N01 10N04
DIFFERENTIAL LEVEL (DL1) C 10N01 10N04
DIFFERENTIAL LEVEL (DL2) D 10N01 10N04
A 10N01 10N02
A 10N01 10N03

OPERATOR INTERFACE/ CONTROL DEVICES

POWER SOURCE

CB 010 TM 120VAC–1P PCM–2
CB 011 TM 120VAC–1P LP–BF
CB 012 TM 120VAC–1P PCM–2
CB 041 TM 480VAC–3P MCC–E
CB 051 TM 480VAC–3P MCC–F
CB 041 TM 120VAC–1P PCM–2
CB 051 TM 120VAC–1P PCM–2

FIELD

DISC 010
FIT 010
FE 010
COS 011
LIT 012
DISC 012
LE 012 ULTRASONIC
ZSOC 041
HSG 041 OSC
HSA 041 LOR
LCP 041
EDR 041
DISC 041
ZSOC 051
HSG 051 OSC
HSA 051 LOR
LCP 051
EDR 051
DISC 051
LIT 041
DISC 041
LE 041 ULTRASONIC
LIT 051
DISC 051
LE 051 ULTRASONIC

1.5" SA
3" FM
6" PD A 10N01 04N01
SEPTAGE RECEIVING PAD
FROM COLLECTION SYSTEM
16" FM
MM
16" FM
INFLUENT METER VAULT
B 10N01 04N01
SEPTAGE
6" SEP
2" PW
PLANT WATER
3" PW
2" PW B 10N01 10N02
2" PW B 10N01 10N03
8" FAP
24" SI B 10N01 10N04 BYPASS
E/D GAT 041
E/D GAT 051
CHANNEL NO. 1 A 10N01 10N02
CHANNEL NO. 2 A 10N01 10N03
FOUL AIR A 10N04 10N01
8" FAP A 10N01 11N01 TO ODOR CONTROL FACILITY

NA900 TYP NF131 TYP NF135 TYP NF137 TYP FE–010 FLOW METER 0–3928 GPM 10"
COS–011 INFLUENT SAMPLER
LE–012 ULTRASONIC LEVEL TRANSMITTER 0–6FT
NA900 TYP NL182 TYP EDR–041 SCREEN INLET GATE NO.1
EDR–051 SCREEN INLET GATE NO.2
LE–041 ULTRASONIC LEVEL TRANSMITTER 0–6FT NL182 TYP NA900 TYP
LE–051 ULTRASONIC LEVEL TRANSMITTER 0–6FT NL182 TYP NA900 TYP

REV	DATE	BY	DESCRIPTION

DESIGNED CAG
DRAWN AD
CHECKED RAM
DATE SEPT 2013

REGISTERED PROFESSIONAL ENGINEER CARLO A. GROSSO No. 16851 ELECTRICAL STATE OF CALIFORNIA 9/16/2013

carollo

SAN LUIS OBISPO COUNTY

SAN LUIS OBISPO COUNTY
LOS OSOS WATER RECYCLING FACILITY PROJECT
INSTRUMENTATION
HEADWORKS INFLUENT

VERIFY SCALES
BAR IS ONE INCH ON ORIGINAL DRAWING
0 1"
IF NOT ONE INCH ON THIS SHEET, ADJUST SCALES ACCORDINGLY

JOB NO. 8930A.11
DRAWING NO. 10N01
SHEET NO. 415 OF 549

LAST SAVED BY: broepken

PROJECT NO. 8930A.11 FILE NAME: 8930A1110N001.dwg

SCADA

YE 043 STATUS ESTOP
HAR 043 ACTION RESET ETM
Y2 043 ALARM FAILED
TAH 043 ALARM TEMP
IAH 043 ALARM HIGH CURRENT
Y1 043 STATUS RUNNING
KI 043 NUM ETM
YR 043 STATUS AUTO
YH 043 STATUS HAND

YE 044 STATUS ESTOP
HAR 044 ACTION RESET ETM
Y2 044 ALARM FAILED
TAH 044 ALARM TEMP
IAH 044 ALARM HIGH CURRENT
KI 044 NUM ETM
Y1 044 STATUS RUNNING
YR 044 STATUS AUTO
YH 044 STATUS HAND

GENERAL NOTES

1. ALL EQUIPMENT AND INSTRUMENT TAGGING ON THIS SHEET SHALL BE PRECEDED WITH FACILITY INDEX NO. 10, WHICH IS NOT SHOWN FOR CLARITY.

CONTROL PANEL

PLC I/O

A 10N04 10N02 — LEVEL
A 10N01 10N02 — LEVEL
UC 040 ENET VCP–040 PLC–2

OPERATOR INTERFACE/ CONTROL DEVICES

POWER SOURCE

CB 040 TM 480VAC–3P MCC–E

FIELD

VCP 040
VCP 040A
ZS 043
MBS 043
MWH 043
TSH 043
CMP 044
MWH 044
TSH 044

PLANT WATER
B 10N01 10N02 — 2" PW
S
1" PW
2" PW

SCREENINGS BIN

A 10N01 10N02
A 10N02 10N04

MBS–043
SCREEN NO.1

CMP–044
SCREENINGS COMPACTOR NO.1

REV	DATE	BY	DESCRIPTION

DESIGNED CAC
DRAWN AD
CHECKED RAM
DATE SEPT 2013

REGISTERED PROFESSIONAL ENGINEER CARLO A. GRECO No. 16851 ELECTRICAL STATE OF CALIFORNIA
9/16/2013

carollo

SAN LUIS OBISPO COUNTY

SAN LUIS OBISPO COUNTY
LOS OSOS WATER RECYCLING FACILITY PROJECT
INSTRUMENTATION
HEADWORKS CHANNEL NO.1

VERIFY SCALES
BAR IS ONE INCH ON ORIGINAL DRAWING
0 1"
IF NOT ONE INCH ON THIS SHEET, ADJUST SCALES ACCORDINGLY

JOB NO. 8930A.11
DRAWING NO. 10N02
SHEET NO. 416 OF 549

LAST SAVED BY: broepken

PROJECT NO. 8930A.11 FILE NAME: 8930A1110N002.dwg

SCADA

YE 053 STATUS ESTOP
HAR 053 ACTION RESET ETM
Y2 053 ALARM FAILED
TAH 053 ALARM TEMP
IAH 053 ALARM HIGH CURRENT
Y1 053 STATUS RUNNING
KI 053 NUM ETM
YR 053 STATUS AUTO
YH 053 STATUS HAND

YE 054 STATUS ESTOP
HAR 054 ACTION RESET ETM
Y2 054 ALARM FAILED
TAH 054 ALARM TEMP
IAH 054 ALARM HIGH CURRENT
KI 054 NUM ETM
Y1 054 STATUS RUNNING
YR 054 STATUS AUTO
YH 054 STATUS HAND

GENERAL NOTES

1. ALL EQUIPMENT AND INSTRUMENT TAGGING ON THIS SHEET SHALL BE PRECEDED WITH FACILITY INDEX NO. 10, WHICH IS NOT SHOWN FOR CLARITY.

CONTROL PANEL

PLC I/O

A 10N04 10N03 — LEVEL
A 10N01 10N03 — LEVEL
UC 050 — ENET VCP–050 — PLC–2

OPERATOR INTERFACE/ CONTROL DEVICES

POWER SOURCE

CB 050 — TM 480VAC–3P — MCC–F

FIELD

VCP 050
VCP 050A
ZS 053
MBS 053
MWH 053
TSH 053
CMP 054
MWH 054
TSH 054

PLANT WATER
B 10N01 10N03 — 2" PW — 1" PW — 2" PW

A 10N01 10N03

SCREENINGS BIN

A 10N03 10N04

MBS–053
SCREEN NO.2

CMP–054
SCREENINGS COMPACTOR NO.2

REV	DATE	BY	DESCRIPTION

DESIGNED CAC
DRAWN AD
CHECKED RAM
DATE SEPT 2013

REGISTERED PROFESSIONAL ENGINEER CARLO A. GRING No. 16851 ELECTRICAL STATE OF CALIFORNIA 9/16/2013

carollo

SAN LUIS OBISPO COUNTY

SAN LUIS OBISPO COUNTY
LOS OSOS WATER RECYCLING FACILITY PROJECT
INSTRUMENTATION
HEADWORKS CHANNEL NO.2

VERIFY SCALES
BAR IS ONE INCH ON ORIGINAL DRAWING
0 1"
IF NOT ONE INCH ON THIS SHEET, ADJUST SCALES ACCORDINGLY

JOB NO. 8930A.11
DRAWING NO. 10N03
SHEET NO. 417 OF 549

LAST SAVED BY: broepken

PROJECT NO. 8930A.11 FILE NAME: 8930A1110N003.dwg

GENERAL NOTES

1. ALL EQUIPMENT AND INSTRUMENT TAGGING ON THIS SHEET SHALL BE PRECEDED WITH FACILITY INDEX NO. 10, WHICH IS NOT SHOWN FOR CLARITY.

SCADA

LAL 042 ALARM · LAH 042 ALARM · LR 042 TREND · QLL 042 SP · QLH 042 SP · LI 042 NUM

LAL 052 ALARM · LAH 052 ALARM · LR 052 TREND · QLL 052 SP · QLH 052 SP · LI 052 NUM

YR 042 STATUS REMOTE · HAD 042 ACTION HOA · YOC 042 STATUS OC · HAO 042 ACTION OC

YR 052 STATUS REMOTE · HAD 052 ACTION HOA · YOC 052 STATUS OC · HAO 052 ACTION OC

FAH 769K ALARM

CONTROL PANEL

PLC I/O

A 10N01 10N04 · B 10N01 10N04 · C 10N01 10N04 · D 10N01 10N04

A 10N04 10N02 · A 10N04 10N03

L 042 AI PLC–2 · L 052 AI PLC–2

MSO 042 DO OPEN PLC–2 · MSC 042 DO CLOSE PLC–2 · HSAR 042 DI REMOTE PLC–2 · ZSO 042 DI OPENED PLC–2 · ZSC 042 DI CLOSED PLC–2

MSO 052 DO OPEN PLC–2 · MSC 052 DO CLOSE PLC–2 · HSAR 052 DI REMOTE PLC–2 · ZSO 052 DI OPENED PLC–2 · ZSC 052 DI CLOSED PLC–2

FSH 769K DI PLC–2

OPERATOR INTERFACE/ CONTROL DEVICES

POWER SOURCE

CB 042 TM 120VAC–1P PCM–2

CB 052 TM 120VAC–1P PCM–2

CB 042 TM 480VAC–3P MCC–E

CB 052 TM 480VAC–3P MCC–F

FIELD

DISC 042 · LIT 042 · LE 042 ULTRASONIC

DISC 052 · LIT 052 · LE 052 ULTRASONIC

ZSOC 042 · HSG 042 OSC · HSA 042 LOR · LCP 042 · EDR 042 · DISC 042 · E/D

ZSOC 052 · HSG 052 OSC · HSA 052 LOR · LCP 052 · EDR 052 · DISC 052 · E/D

FSH 769K FBV · FE 769K FBV

BYPASS B 10N01 10N04 · 8" FAP · FOUL AIR A 10N04 10N01

CHANNEL NO. 1 A 10N02 10N04

CHANNEL NO. 2 B 10N03 10N04

GAT 042 · GAT 052

EFFLUENT CHANNEL

14" SI · TO STORM RETENTION POND A 10N04 04N02

18" SI · TO INFLUENT SPLITTER BOX A 10N04 20N02

POTABLE WATER 2" W1

FROM PLANT DRAIN PUMP STATION A 04N01 10N04 · 6" PDFM

LE–042 ULTRASONIC LEVEL TRANSMITTER 0–6FT NL182 TYP NA900 TYP

LE–052 ULTRASONIC LEVEL TRANSMITTER 0–6FT NL182 TYP NA900 TYP

EDR–042 SCREEN OUTLET GATE NO.1

EDR–052 SCREEN OUTLET GATE NO.2

FE–769K FLOW SWITCH HIGH

REV	DATE	BY	DESCRIPTION

DESIGNED CAG · DRAWN AD · CHECKED RAM · DATE SEPT 2013

REGISTERED PROFESSIONAL ENGINEER CARLO A. GROSSO No. 18851 ELECTRICAL STATE OF CALIFORNIA 9/16/2013

carollo

SAN LUIS OBISPO COUNTY

SAN LUIS OBISPO COUNTY

LOS OSOS WATER RECYCLING FACILITY PROJECT

INSTRUMENTATION

HEADWORKS EFFLUENT

VERIFY SCALES

BAR IS ONE INCH ON ORIGINAL DRAWING

0 1"

IF NOT ONE INCH ON THIS SHEET, ADJUST SCALES ACCORDINGLY

JOB NO. 8930A.11

DRAWING NO. 10N04

SHEET NO. 418 OF 549

LAST SAVED BY: broepken

PROJECT NO. 8930A.11 FILE NAME: 8930A1110N004.dwg

SCADA

YR 071 STATUS REMOTE
HAR 071 ACTION RESET ETM
Y2 071 ALARM FAILED
HAD 071 ACTION HOA
TAH 071 ALARM HIGH TEMP
KI 071 NUM ETM
Y1 071 STATUS RUNNING
HAT 071 ACTION SS

YR 072 STATUS REMOTE
HAR 072 ACTION RESET ETM
Y2 072 ALARM FAILED
HAD 072 ACTION HOA
TAH 072 ALARM HIGH TEMP
KI 072 NUM ETM
Y1 072 STATUS RUNNING
HAT 072 ACTION SS

HAJ 070 ACTION LS

GENERAL NOTES

1. ALL EQUIPMENT AND INSTRUMENT TAGGING ON THIS SHEET SHALL BE PRECEDED WITH FACILITY INDEX NO. 11, WHICH IS NOT SHOWN FOR CLARITY.

CONTROL PANEL
PLC I/O

HSAR 071 DI REMOTE PLC–2
MS 071 DO RUN PLC–2
AUX2 071 DI OL PLC–2
AUX1 071 DI RUNNING PLC–2
TSH 071 DI HIGH TEMP PLC–2

HSAR 072 DI REMOTE PLC–2
MS 072 DO RUN PLC–2
AUX2 072 DI OL PLC–2
AUX1 072 DI RUNNING PLC–2
TSH 072 DI HIGH TEMP PLC–2

POWER SOURCE

HSR 071 RESET
Y1 071 RUN
YA 071 COMMON FAIL
MS-071
FVNR
480VAC-3P
MCC-E

HSR 072 RESET
Y1 072 RUN
YA 072 COMMON FAIL
MS-072
FVNR
480VAC-3P
MCC-E

FIELD

LOR HSA 071 START HSC 071 E–STOP HSX 071 LCP 071
FAN 071 MWH 071 TSH 071

LOR HSA 072 START HSC 072 E–STOP HSX 072 LCP 072
FAN 072 MWH 072 TSH 072

OXIDATION DITCH A 20N01 11N01 — 6" FAP
HEADWORKS-SCREEN CHANNELS A 10N01 11N01 — 8" FAP
DEWATERING BLDG A 51N01 11N01 — 6" FAP
10" FAP
10" FAD
PI 071A
PI 071B
3/4" CHD
PI 072A
PI 072B
PLANT DRAIN SYSTEM — 3" CHD

D 11N02 11N01 — 1/2" NW
E 11N02 11N01 — 1" PW

EXHAUST
DPI 073A FBBFS
DPI 073B FBBFS
FLT 073
MODULAR BIOFILTER NO. 1

1" PW 11N02 11N01 C
1/2" NW 11N02 11N01 B
1" PW 11N02 11N01 A
EXHAUST
MIST ELIMINATOR (TYP)
DPI 074A FBBFS
DPI 074B FBBFS
SECOND STAGE ORGANIC MEDIA (TYP)
FIRST STAGE INORGANIC MEDIA (TYP)
FLT 074
MODULAR BIOFILTER NO. 2

10" FAD
3/4" CHD
3" CHD
1" CHD

PI–071A PRESSURE INDICATOR –5–0" WC NP105 TYP
FAN–071 ODOR CONTROL FAN NO. 1 3HP 480VAC 3PH G 00N16
PI–071B PRESSURE INDICATOR 0–15" WC NP105 TYP
PI–072A PRESSURE INDICATOR –5–0" WC NP105 TYP
FAN–072 ODOR CONTROL FAN NO. 2 3HP 480VAC 3PH G 00N16
PI–072B PRESSURE INDICATOR 0–15" WC NP105 TYP
DPI–073A DIFFERENTIAL PRESSURE INDICATOR
DPI–073B DIFFERENTIAL PRESSURE INDICATOR
DPI–074B DIFFERENTIAL PRESSURE INDICATOR
DPI–074A DIFFERENTIAL PRESSURE INDICATOR

REV	DATE	BY	DESCRIPTION

DESIGNED PCK
DRAWN CGR
CHECKED RAM
DATE SEPT 2013

REGISTERED PROFESSIONAL ENGINEER CARLO A. GRIMES No. 15851 ELECTRICAL STATE OF CALIFORNIA 9/16/2013

carollo

SAN LUIS OBISPO COUNTY

SAN LUIS OBISPO COUNTY
LOS OSOS WATER RECYCLING FACILITY PROJECT
INSTRUMENTATION
ODOR CONTROL FACILITY - 1

VERIFY SCALES
BAR IS ONE INCH ON ORIGINAL DRAWING
0 1"
IF NOT ONE INCH ON THIS SHEET, ADJUST SCALES ACCORDINGLY

JOB NO. 8930A.11
DRAWING NO. 11N01
SHEET NO. 419 OF 549

LAST SAVED BY: broepken

PROJECT NO. 8930A.11 FILE NAME: 8930A1111N001.dwg

GENERAL NOTES

1. ALL EQUIPMENT AND INSTRUMENT TAGGING ON THIS SHEET SHALL BE PRECEDED WITH FACILITY INDEX NO. 11 WHICH IS NOT SHOWN FOR CLARITY.

SCADA

Y2 070 — ALARM FAILED

CONTROL PANEL — PLC I/O

AUX2 070 — DI FAILED — PLC–2

CONTROL PANEL — OI/ CONTROL DEVICES

POWER SOURCE

CB 070 — TM 120VAC–1P — LP–BF

FIELD

VCP 070

IRRIGATION VALVE CABINET FURNISHED BY VENDOR

NON-POTABLE WATER — 1" W2

EFFLUENT PUMP STATION — A — 40N03 11N02 — 1" REW

TNK 078 — NUTRIENT SUPPLY TANK — 1/2" NS

PI 070

FI 070

SV 075A — FI 075A

SV 075B — FI 075B

SV 076 — FI 076

SV 077A — FI 077A

SV 077B — FI 077B

1ST STAGE BIOFILTER 2 — 1" PW — A — 11N02 11N01

2ND STAGE BIOFILTER 2 — 1/2" NW — B — 11N02 11N01

HUMIDIFICATION WATER LINE — 1" PW — C — 11N02 11N01

1ST STAGE BIOFILTER 1 — 1/2" NW — D — 11N02 11N01

2ND STAGE BIOFILTER 1 — 1" PW — E — 11N02 11N01

PI–070 PRESSURE INDICATOR
FI–070 ROTOMETER
SV–075A VALVE
FI–075A ROTOMETER
SV–075B VALVE
FI–075B ROTOMETER
SV–076 VALVE
FI–076 ROTOMETER
FI–077B ROTOMETER
SV–077B VALVE
FI–077A ROTOMETER
SV–077A VALVE

REV	DATE	BY	DESCRIPTION

DESIGNED PCK
DRAWN CGR
CHECKED RAM
DATE SEPT 2013

REGISTERED PROFESSIONAL ENGINEER — CARLO A. GROSSINI — No. 16851 — ELECTRICAL — STATE OF CALIFORNIA — 9/16/2013

carollo

SAN LUIS OBISPO COUNTY

SAN LUIS OBISPO COUNTY

LOS OSOS WATER RECYCLING FACILITY PROJECT

INSTRUMENTATION

ODOR CONTROL FACILITY - 2

VERIFY SCALES
BAR IS ONE INCH ON ORIGINAL DRAWING
0 — 1"
IF NOT ONE INCH ON THIS SHEET, ADJUST SCALES ACCORDINGLY

JOB NO. 8930A.11
DRAWING NO. 11N02
SHEET NO. 420 OF 549

LAST SAVED BY: broepken

PROJECT NO. 8930A.11 FILE NAME: 8930A1111N002.dwg

SCADA

HAD 090 ACTION HOA
HAR 090 ACTION RESET ETM
Y2 090 ALARM FAILED
TAH 090 ALARM
HAT 090 ACTION SS
KI 090 NUM ETM
Y1 090 STATUS RUNNING
YR 090 STATUS REMOTE

HAD 091 ACTION HOA
HAR 091 ACTION RESET ETM
Y2 091 ALARM FAILED
TAH 091 ALARM
QS 091 SP SPEED
HAT 091 ACTION SS
KI 091 NUM ETM
Y1 091 STATUS RUNNING
YR 091 STATUS REMOTE
SIB 091 NUM SPEED

YR 094 STATUS REMOTE
HAD 094 ACTION HOA
AAL 095 ALARM DO
AAH 095 ALARM DO
AR 095 TREND DO
YOC 094 STATUS OC
ZI 094 NUM POSITION
HAK 094 ACTION JOJC
QAL 095 SP DO
QAH 095 SP DO
AI 095 NUM DO

HAD 092 ACTION HOA
HAR 092 ACTION RESET ETM
Y2 092 ALARM FAILED
TAH 092 ALARM
QS 092 SP SPEED
HAT 092 ACTION SS
KI 092 NUM ETM
Y1 092 STATUS RUNNING
YR 092 STATUS REMOTE
SIB 092 NUM SPEED

GENERAL NOTES

1. ALL EQUIPMENT AND INSTRUMENT TAGGING ON THIS SHEET SHALL BE PRECEDED WITH FACILITY INDEX NO. 20, WHICH IS NOT SHOWN FOR CLARITY.

CONTROL PANEL

PLC I/O

HSAR 090 DI REMOTE — PLC-2
MS 090 DO RUN — PLC-2
AUX2 090 DI OL — PLC-2
TSH 090 DI — PLC-2
LSL 090 DI LOW OIL — PLC-2
AUX1 090 DI RUNNING — PLC-2

HSAR 091 DI REMOTE — PLC-2
MS 091 DO RUN — PLC-2
SB 091 AI SPEED IN — PLC-2
SS 091 AO SPEED OUT — PLC-2
LSL 091 DI LOW OIL — PLC-2
TSH 091 DI — PLC-2
AUX1 091 DI RUNNING — PLC-2
AUX2 091 DI FAILED — PLC-2

MSO 094 DO OPEN — PLC-2
MSC 094 DO CLOSE — PLC-2
HSAR 094 DI REMOTE — PLC-2
ZSO 094 DI OPENED — PLC-2
ZSC 094 DI CLOSED — PLC-2
Z 094 AI POSITION — PLC-2
A 095 AI DO — PLC-2

HSAR 092 DI REMOTE — PLC-2
MS 092 DO RUN — PLC-2
SB 092 AI SPEED IN — PLC-2
SS 092 AO SPEED OUT — PLC-2
LSL 092 DI LOW OIL — PLC-2
TSH 092 DI — PLC-2
AUX1 092 DI RUNNING — PLC-2
AUX2 092 DI FAILED — PLC-2

OPERATOR INTERFACE/ CONTROL DEVICES

POWER SOURCE

Y1 090 RUN
YA 090 COMMON FAIL
HSR 090 RST
MS-090
FVNR
480VAC-3P
MCC-E

Y1 091 RUN
YA 091 COMMON FAIL
HSR 091 RST
VFD-091
VFD
480VAC-3P
MCC-E

CB 094 TM 480VAC-3P MCC-E

CB 095 TM 120VAC-1P PCM-2

Y1 092 RUN
YA 092 COMMON FAIL
HSR 092 RST
VFD-092
VFD
480VAC-3P
MCC-E

FIELD

HSC 090 START
HSX 090 E-STOP
HSA 090 LOR
LCP 090
MIX 090
LSL 090 OIL
TSH 090
MWH 090

HSC 091 START
HSX 091 E-STOP
HSA 091 LOR
LCP 091
AER 091
MWH 091
TSH 091
LSL 091 OIL

ZSOC 094
ZT 094
OSC
HSG 094
HSA 094 LOR
EDM 094
DISC 094

AIT 095 DO
DISC 095
AE 095 DO

HSC 092 START
HSX 092 E-STOP
HSA 092 LOR
LCP 092
AER 092
MWH 092
TSH 092
LSL 092 OIL

A 20N03 20N01 — 1" SHS
RAS WAS PUMP STATION
A 50N03 20N01 — 8" RAS
ODOR CONTROL FACILITY
20N01 11N01 A — 6" FAP
STORM WATER PUMP STATION
A 04N02 20N01 — 4" STW

B 20N03 20N01 — 1" SHS

GAT 081
GAT 082
GAT 083
GAT 084
GAT 096
GAT 093
GAT 094
18" ML
OXIDATION DITCH NO. 1

CONTINUED ON DWG 20-N-02

MIX-090 ANOXIC MIXER NO. 1 — I 00N17
AER-091 MECHANICAL AERATOR NO. 1 — E 00N14
EDM-094 MIXED LIQUOR SPLITTER WEIR GATE NO. 1
AE-095 DISSOLVED OXYGEN 0-20 mg/L — NA011 TYP — NA900 TYP
AER-092 MECHANICAL AERATOR NO. 2 — E 00N14

REV	DATE	BY	DESCRIPTION

DESIGNED CAG
DRAWN AD
CHECKED RAM
DATE SEPT 2013

REGISTERED PROFESSIONAL ENGINEER CARLO A. SCRIVO No. 18851 ELECTRICAL STATE OF CALIFORNIA 9/16/2013

carollo

SAN LUIS OBISPO COUNTY

SAN LUIS OBISPO COUNTY

LOS OSOS WATER RECYCLING FACILITY PROJECT

INSTRUMENTATION

OXIDATION DITCH NO. 1

VERIFY SCALES
BAR IS ONE INCH ON ORIGINAL DRAWING
0 1"
IF NOT ONE INCH ON THIS SHEET, ADJUST SCALES ACCORDINGLY

JOB NO. 8930A.11
DRAWING NO. 20N01
SHEET NO. 421 OF 549

LAST SAVED BY: collins

PROJECT NO. 8930A.11 FILE NAME: 8930A1120N001.dwg

SCADA

HAD 100 ACTION HOA
HAT 100 ACTION SS
HAR 100 ACTION RESET ETM
KI 100 NUM ETM
Y2 100 ALARM FAILED
Y1 100 STATUS RUNNING
TAH 100 ALARM
YR 100 STATUS REMOTE

HAD 101 ACTION HOA
HAT 101 ACTION SS
HAR 101 ACTION RESET ETM
KI 101 NUM ETM
Y2 101 ALARM FAILED
Y1 101 STATUS RUNNING
TAH 101 ALARM
YR 101 STATUS REMOTE
QS 101 SP SPEED
SIB 101 NUM SPEED

YOC 104 STATUS OC
ZI 104 NUM POSITION
YR 104 STATUS REMOTE
HAD 104 ACTION HOA
HAK 104 ACTION JOJC

AAL 105 ALARM DO
QAL 105 SP DO
AAH 105 ALARM DO
QAH 105 SP DO
AR 105 TREND DO
AI 105 NUM DO

HAD 102 ACTION HOA
HAT 102 ACTION SS
HAR 102 ACTION RESET ETM
KI 102 NUM ETM
Y2 102 ALARM FAILED
Y1 102 STATUS RUNNING
TAH 102 ALARM
YR 102 STATUS REMOTE
QS 102 SP SPEED
SIB 102 NUM SPEED

GENERAL NOTES

1. ALL EQUIPMENT AND INSTRUMENT TAGGING ON THIS SHEET SHALL BE PRECEDED WITH FACILITY INDEX NO. 20, WHICH IS NOT SHOWN FOR CLARITY.

CONTROL PANEL — PLC I/O

HSAR 100 DI REMOTE — PLC-2
MS 100 DO RUN — PLC-2
AUX2 100 DI OL — PLC-2
TSH 100 DI — PLC-2
LSL 100 DI LOW OIL — PLC-2
AUX1 100 DI RUNNING — PLC-2

HSAR 101 DI REMOTE — PLC-2
MS 101 DO RUN — PLC-2
SB 101 AI SPEED IN — PLC-2
SS 101 AO SPEED OUT — PLC-2
LSL 101 DI LOW OIL — PLC-2
TSH 101 DI — PLC-2
AUX1 101 DI RUNNING — PLC-2
AUX2 101 DI FAILED — PLC-2

MSO 104 DO OPEN — PLC-2
MSC 104 DO CLOSE — PLC-2
HSAR 104 DI REMOTE — PLC-2
ZSO 104 DI OPENED — PLC-2
ZSC 104 DI CLOSED — PLC-2
Z 104 AI POSITION — PLC-2
A 105 AI DO — PLC-2

HSAR 102 DI REMOTE — PLC-2
MS 102 DO RUN — PLC-2
SB 102 AI SPEED IN — PLC-2
SS 102 AO SPEED OUT — PLC-2
LSL 102 DI LOW OIL — PLC-2
TSH 102 DI — PLC-2
AUX1 102 DI RUNNING — PLC-2
AUX2 102 DI FAILED — PLC-2

OPERATOR INTERFACE/ CONTROL DEVICES

POWER SOURCE

Y1 100 RUN, YA 100 COMMON FAIL, HSR 100 RST
MS-100
FVNR
480VAC-3P
MCC-F

Y1 101 RUN, YA 101 COMMON FAIL, HSR 101 RST
VFD-101
VFD
480VAC-3P
MCC-F

CB 104 TM 480VAC-3P MCC-F

CB 105 TM 120VAC-1P PCM-2

Y1 102 RUN, YA 102 COMMON FAIL, HSR 102 RST
VFD-102
VFD
480VAC-3P
MCC-F

FIELD

HSA 100 LOR, HSX 100 E-STOP, HSC 100 START, LCP 100
MIX 100, LSL 100 OIL, TSH 100, MWH 100

HSA 101 LOR, HSX 101 E-STOP, HSC 101 START, LCP 101
AER 101, MWH 101, TSH 101, LSL 101 OIL

ZSOC 104, ZT 104
HSG 104 OSC
HSA 104 LOR
EDM 104
DISC 104

AIT 105 DO
AE 105 DO
DISC 105

HSA 102 LOR, HSX 102 E-STOP, HSC 102 START, LCP 102
AER 102, MWH 102, TSH 102, LSL 102 OIL

CONTINUED ON DWG 20N01

HEADWORKS A 10N04 20N02 — 18" SI
GAT 085, GAT 086, GAT 106, GAT 087, GAT 088

EFFLUENT PUMP STATION A 40N03 20N02 — (NON-COMPLIANT) 8" OOCR

SCUM PUMP STATION A 23N01 20N02 — 4" SC

A 20N03 20N02 — 1" SHS

OXIDATION DITCH NO. 2

GAT 103, GAT 104, E/D, GAT 107, GAT 108

B 20N03 20N02 — 1" SHS

FI 453A — POLYMER FACILITY A 51N06 20N02

FI 453B

18" ML — SECONDARY CLARIFIER NO. 1 A 20N02 21N01

18" ML — SECONDARY CLARIFIER NO. 2 A 20N02 21N02

MIX-100 ANOXIC MIXER NO. 2 (I 00N17)

AER-101 MECHANICAL AERATOR NO. 3 (E 00N14)

FI-453A POLYMER FLOW 0-31 GPH

EDM-104 MIXED LIQOUR SPLITTER WEIR GATE NO. 2

AE-105 DISSOLVED OXYGEN 0-20 mg/l

NA011 TYP, NA900 TYP

FI-453B POLYMER FLOW 0-31 GPH

AER-102 MECHANICAL AERATOR NO. 4 (E 00N14)

REV	DATE	BY	DESCRIPTION

DESIGNED CAG
DRAWN AD
CHECKED RAM
DATE SEPT 2013

REGISTERED PROFESSIONAL ENGINEER CARLO A. GROSSO No. 18851 ELECTRICAL STATE OF CALIFORNIA 9/16/2013

carollo

SAN LUIS OBISPO COUNTY

SAN LUIS OBISPO COUNTY
LOS OSOS WATER RECYCLING FACILITY PROJECT
INSTRUMENTATION
OXIDATION DITCH NO. 2

VERIFY SCALES
BAR IS ONE INCH ON ORIGINAL DRAWING
0 — 1"
IF NOT ONE INCH ON THIS SHEET, ADJUST SCALES ACCORDINGLY

JOB NO. 8930A.11
DRAWING NO. 20N02
SHEET NO. 422 OF 549

LAST SAVED BY: broepken

PROJECT NO. 8930A.11 FILE NAME: 8930A1120N002.dwg

GENERAL NOTES

1. ALL EQUIPMENT AND INSTRUMENT TAGGING ON THIS SHEET SHALL BE PRECEDED WITH FACILITY INDEX NO. 20, WHICH IS NOT SHOWN FOR CLARITY.

SCADA

CONTROL PANEL
PLC I/O

OPERATOR INTERFACE/
CONTROL DEVICES

POWER SOURCE

FIELD

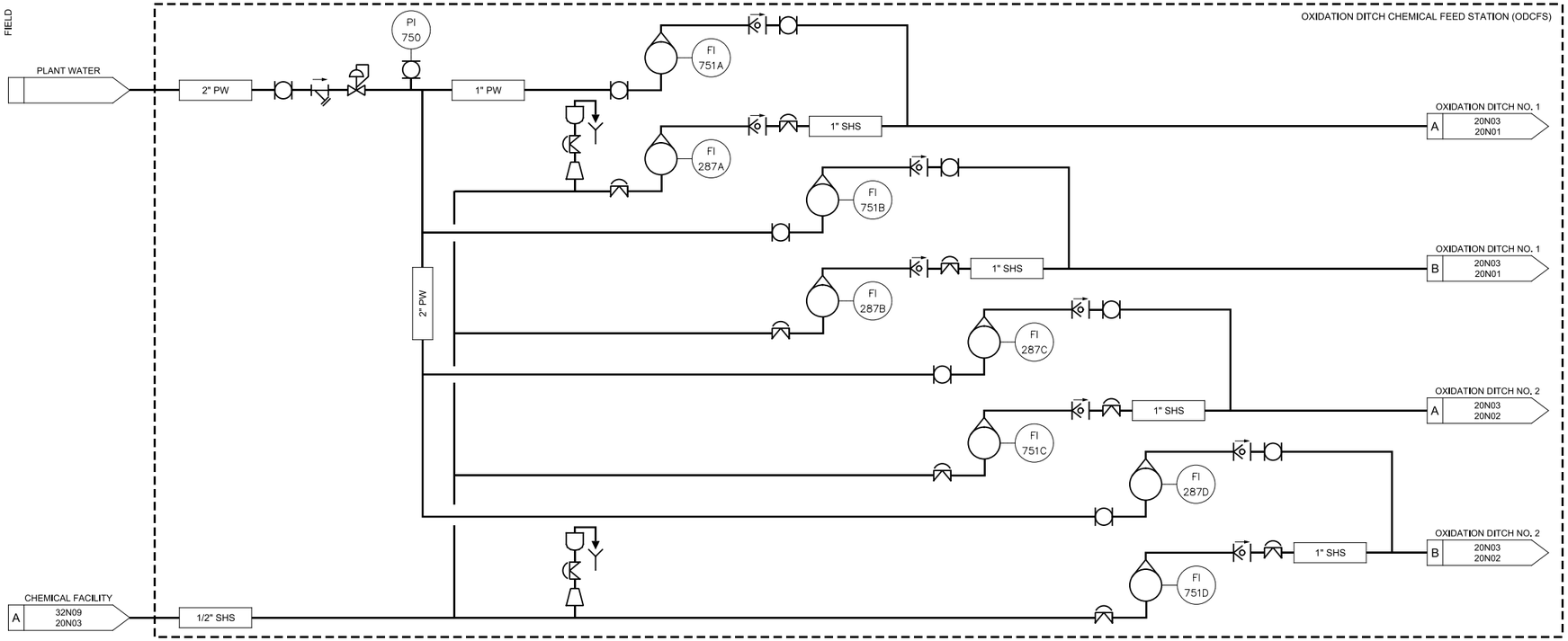

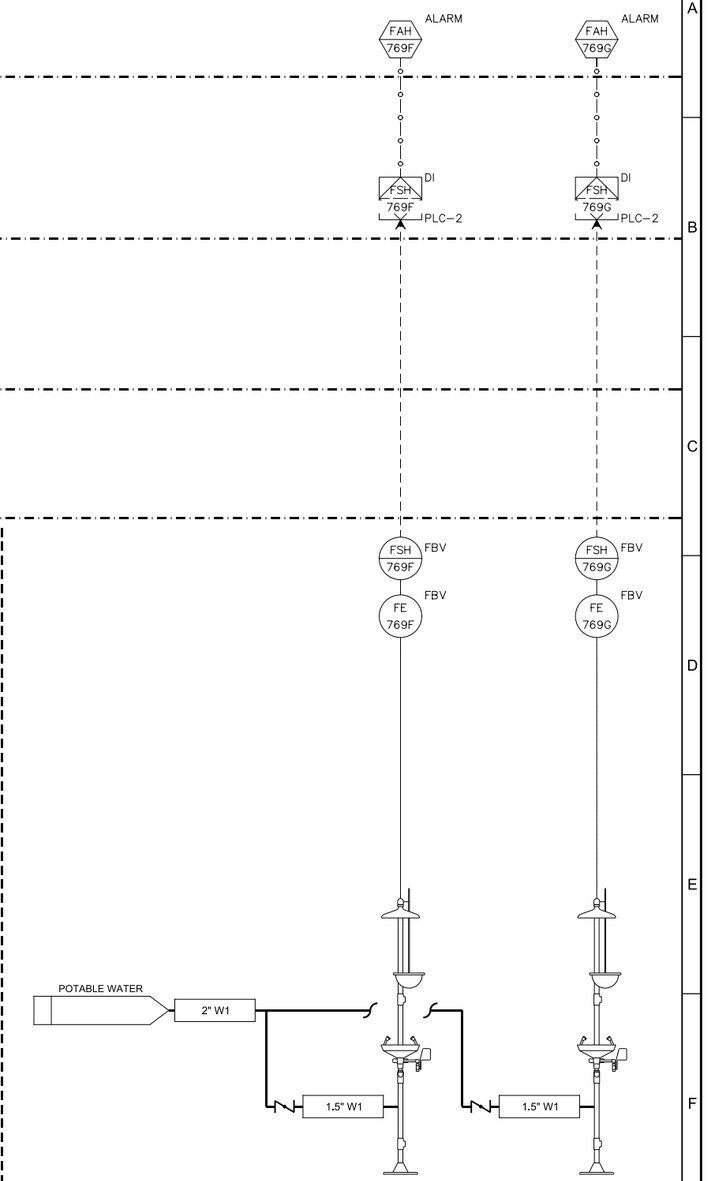

PI-750
PRESSURE GUAGE
0-60 PSIG
NP105 TYP

FI-751A ROTOMETER 0-20 GPM
FI-287A ROTOMETER 0-3 GPH
FI-751B ROTOMETER 0-20 GPM
FI-287B ROTOMETER 0-3 GPH
FI-287C ROTOMETER 0-3 GPH
FI-751C ROTOMETER 0-20 GPM
FI-287D ROTOMETER 0-3 GPH
FI-751D ROTOMETER 0-20 GPM

FE-769F FLOW SWITCH HIGH

FE-769G FLOW SWITCH HIGH

REV	DATE	BY	DESCRIPTION

DESIGNED CAG
DRAWN CC
CHECKED RAM
DATE SEPT 2013

REGISTERED PROFESSIONAL ENGINEER CARLO A. GROSSO No. 16851 ELECTRICAL STATE OF CALIFORNIA
9/16/2013

carollo

SAN LUIS OBISPO COUNTY

SAN LUIS OBISPO COUNTY

LOS OSOS WATER RECYCLING FACILITY PROJECT

INSTRUMENTATION

OXIDATION DITCH CHEMICAL FEED

VERIFY SCALES
BAR IS ONE INCH ON ORIGINAL DRAWING
0 1"
IF NOT ONE INCH ON THIS SHEET, ADJUST SCALES ACCORDINGLY

JOB NO. 8930A.11
DRAWING NO. 20N03
SHEET NO. 423 OF 549

LAST SAVED BY: broepken

PROJECT NO. 8930A.11 FILE NAME: 8930A1120N003.dwg

SCADA

CONTROL PANEL

PLC I/O

OPERATOR INTERFACE/ CONTROL DEVICES

POWER SOURCE

FIELD

HAD1 111 ACTION HOA SCUM–SV

XAHH 111 ALARM HI HI TORQUE

XAH 111 ALARM HI TORQUE

HAR 111 ACTION RESET ETM

Y2 111 ALARM FAILED

TAH 111 ALARM

QK1 111 SP TIME SCUM–SV CLOSE

HAD2 111 ACTION HOA CLR

HAT 111 ACTION SS

KI 111 NUM ETM

Y1 111 STATUS RUNNING

YR 111 STATUS REMOTE

XA 111 ALARM SHEAR PIN

HAO 752A ACTION OC

HAD 752A ACTION HOA

FAH 769H ALARM

FSH 769H DI PLC–1

ZS 111 DI SKIMMER ARM POS PLC–1

XSHH 111 DI HI HI TORQUE PLC–1

HSAR 111 DI REMOTE PLC–1

AUX1 111 DI RUNNING PLC–1

TSH 111 DI HI TEMP PLC–1

XSH 111 DI HI TORQUE PLC–1

XS 111 DI SHEAR PIN PLC–1

MS 111 DO RUN PLC–1

AUX2 111 DI OL PLC–1

SV 111 DO SCUM SPRAY PLC–1

SV 752A DO PLANT WATER PLC–1

Y1 111 RUN

YA 111 COMMON FAIL

HSR 111 RST

FVNR–111

480VAC–3P MCC–C

CB 111 TM 480V–3P MCC–C

FSH 769H FBV

FE 769H FBV

SV 111

LOR HSA 111 LCP 111 START HSC 111 HSX 111 E–STOP

CLR 111 MWH 111 SHEAR PIN XS 111 TORQUE XSH 111 TSH 111

XSHH 111 TORQUE

VCP 111

HOI 111

SV 752A

FI 752A

PLANT WATER A 21N01 21N01

HOSE BIB

PLANT WATER 2" PW

1-1/2" PW

1" PW

2" PW

ZS 111

PLANT WATER A 21N01 21N01

SCUM PIT 21N01 23N01 A 6" SC

MIXED LIQUOR SPLITTER BOX A 20N02 21N01 18" ML

8" RAS B 21N01 50N01

12" PD PLANT DRAIN PUMP STATION A 21N01 04N01

GAT 111

CHEMICAL FACILITY 32N05 21N01 A 1/2" SHS

18" SE A 21N01 21N02

POTABLE WATER 2" W1

FE–769H FLOW SWITCH HIGH

CLR–111 SECONDARY CLARIFIER NO. 1 DRIVE A 00N11

HOI–111 SECONDARY CLARIFIER NO. 1 HOIST

FI–752A ROTOMETER 0–20 GPM

GENERAL NOTES

1. ALL EQUIPMENT AND INSTRUMENT TAGGING ON THIS SHEET SHALL BE PRECEDED WITH FACILITY INDEX NO. 21, WHICH IS NOT SHOWN FOR CLARITY.

REV	DATE	BY	DESCRIPTION

DESIGNED CAG
DRAWN AD
CHECKED RAM
DATE SEPT 2013

REGISTERED PROFESSIONAL ENGINEER CARLO A. BROSIO No. 18851 ELECTRICAL STATE OF CALIFORNIA 9/16/2013

carollo

SAN LUIS OBISPO COUNTY

SAN LUIS OBISPO COUNTY

LOS OSOS WATER RECYCLING FACILITY PROJECT

INSTRUMENTATION

SECONDARY CLARIFIER NO. 1

VERIFY SCALES
BAR IS ONE INCH ON ORIGINAL DRAWING
0 1"
IF NOT ONE INCH ON THIS SHEET, ADJUST SCALES ACCORDINGLY

JOB NO. 8930A.11
DRAWING NO. 21N01
SHEET NO. 424 OF 549

LAST SAVED BY: broepken

PROJECT NO. 8930A.11 FILE NAME: 8930A1121N001.dwg

SCADA

CONTROL PANEL

PLC I/O

OPERATOR INTERFACE/ CONTROL DEVICES

POWER SOURCE

FIELD

HAD1 112 ACTION HOA — SCUM–SV

QK1 112 SP TIME — SCUM–SV CLOSE

XAHH 112 ALARM HI HI TORQUE

HAD2 112 ACTION HOA — CLR

XAH 112 ALARM HI TORQUE

HAT 112 ACTION SS

HAR 112 ACTION RESET ETM

KI 112 NUM ETM

Y2 112 ALARM FAILED

Y1 112 STATUS RUNNING

TAH 112 ALARM

YR 112 STATUS REMOTE

XA 112 ALARM SHEAR PIN

HAO 752B ACTION OC

HAD 752B ACTION HOA

FAH 769J ALARM

FSH 769J DI — PLC–1

SV 112 DO SCUM SPRAY — PLC–1

ZS 112 DI SKIMMER ARM POS — PLC–1

XSHH 112 DI HI HI TORQUE — PLC–1

HSAR 112 DI REMOTE — PLC–1

AUX1 112 DI RUNNING — PLC–1

TSH 112 DI HI TEMP — PLC–1

XSH 112 DI HI TORQUE — PLC–1

XS 112 DI SHEAR PIN — PLC–1

MS 112 DO RUN — PLC–1

AUX2 112 DI OL — PLC–1

SV 752B DO PLANT WATER — PLC–1

Y1 112 RUN

YA 112 COMMON FAIL

HSR 112 RST

FVNR–112

480VAC–3P

MCC–D

CB 112 TM 408V–3P MCC–D

LOR

START

HSA 112

HSC 112

LCP 112

HSX 112

E–STOP

CLR 112

MWH 112

SHEAR PIN

XS 112

TORQUE

XSH 112

TSH 112

XSHH 112 TORQUE

VCP 112

HOI 112

SV 752B

FI 752B

S

PLANT WATER A 21N02 21N02

FSH 769J FBV

FE 769J FBV

SV 112

HOSE BIB

PLANT WATER — 2" PW

1-1/2" PW

1" PW

2" PW

S

ZS 112

PLANT WATER A 21N02 21N02

SCUM PIT 21N02 23N01 A — 6" SC

MIXED LIQUOR SPLITTER BOX A 20N02 21N02 — 18" ML

POTABLE WATER — 2" W1

CHEMICAL FACILITY 32N05 21N02 A — 1/2" SHS

16" SE

GAT 112

FILTER INFLUENT PUMP STATION A 21N02 28N02

A 21N01 21N02 — 16" SE — 18" SE

PUMPS B 21N02 50N01 — 8" RAS

PLANT DRAIN PUMP STATION A 21N02 04N01 — 12" PD

FE–769J
FLOW SWITCH HIGH

CLR–112
SECONDARY CLARIFIER NO. 2 DRIVE
A 00N11

HOI–112
SECONDARY CLARIFIER NO. 2 HOIST

FI–752B
ROTOMETER
0–20 GPM

GENERAL NOTES

1. ALL EQUIPMENT AND INSTRUMENT TAGGING ON THIS SHEET SHALL BE PRECEDED WITH FACILITY INDEX NO. 21, WHICH IS NOT SHOWN FOR CLARITY.

REV	DATE	BY	DESCRIPTION

DESIGNED CAG
DRAWN AD
CHECKED RAM
DATE SEPT 2013

REGISTERED PROFESSIONAL ENGINEER CARLO A. BROEKEN No. 18851 ELECTRICAL STATE OF CALIFORNIA 9/16/2013

carollo

SAN LUIS OBISPO COUNTY

SAN LUIS OBISPO COUNTY

LOS OSOS WATER RECYCLING FACILITY PROJECT

INSTRUMENTATION

SECONDARY CLARIFIER NO. 2

VERIFY SCALES
BAR IS ONE INCH ON ORIGINAL DRAWING
0 — 1"
IF NOT ONE INCH ON THIS SHEET, ADJUST SCALES ACCORDINGLY

JOB NO. 8930A.11
DRAWING NO. 21N02
SHEET NO. 425 OF 549

LAST SAVED BY: broepken

PROJECT NO. 8930A.11 FILE NAME: 8930A1121N002.dwg

SCADA

LAL 130 ALARM
LAH 130 ALARM
LR 130 TREND
QLL 130 SP
QL2 130 SP STOP PUMP
QLH 130 SP
QL1 130 SP START PUMP
LI 130 NUM
Y2 131 ALARM FAILED
HAR 131 ACTION RESET ETM
MAH 131 ALARM
HAD 131 ACTION HOA
YR 131 STATUS REMOTE
Y1 131 STATUS RUNNING
KI 131 NUM ETM
TAH 131 ALARM
HAT 131 ACTION SS
Y2 132 ALARM FAILED
HAR 132 ACTION RESET ETM
MAH 132 ALARM
HAD 132 ACTION HOA
YR 132 STATUS REMOTE
Y1 132 STATUS RUNNING
KI 132 NUM ETM
TAH 132 ALARM
HAT 132 ACTION SS
HAJ 133 ACTION LS PUMP
YR 130 STATUS REMOTE
HAD 130 ACTION HOA
QK 130 SP MIX
YOC 130 STATUS OC
HAO 130 ACTION OC MIX/TRANS

GENERAL NOTES

1. ALL EQUIPMENT AND INSTRUMENT TAGGING ON THIS SHEET SHALL BE PRECEDED WITH FACILITY INDEX NO. 23, WHICH IS NOT SHOWN FOR CLARITY.

CONTROL PANEL
PLC I/O

L 130 AI PLC-1
MSH 131 DI PLC-1
TSH 131 DI PLC-1
HSAR 131 DI REMOTE PLC-1
AUX2 131 DI OL PLC-1
AUX1 131 DI RUNNING PLC-1
MS 131 DO RUN PLC-1
MSH 132 DI PLC-1
TSH 132 DI PLC-1
HSAR 132 DI REMOTE PLC-1
AUX2 132 DI OL PLC-1
AUX1 132 DI RUNNING PLC-1
MS 132 DO RUN PLC-1
MSO 130 DO OPEN PLC-1
MSC 130 DO CLOSE PLC-1
HSAR 130 DI REMOTE PLC-1
ZSO 130 DI OPENED PLC-1
ZSC 130 DI CLOSED PLC-1

OPERATOR INTERFACE/
CONTROL DEVICES

POWER SOURCE

Y1 131 RUNNING
YA 131 COMMON FAIL
HSR 131 RST
MS-131
FVNR
480VAC-3P
MCC-C
Y1 132 RUNNING
YA 132 COMMON FAIL
HSR 132 RST
MS-132
FVNR
480VAC-3P
MCC-D
CB 130 TM 480VAC-3P MCC-C

FIELD

LIT 130
LE 130
HSX 131 E-STOP
HSC 131 START
HSA 131 LOR
LCP 131
PPR 131
MSH 131 MOISTURE
TSH 131
PMP 131
HSX 132 E-STOP
HSC 132 START
HSA 132 LOR
LCP 132
PPR 132
MSH 132 MOISTURE
TSH 132
PMP 132
ZSOC 130
HSG 130 OSC
HSA 130 LOR
EDR 130
DISC 130
PI 130
VAL 130

PLANT WATER
1" PW
FI 750
CHEMICAL FACILITY
A 32N09 23N01
1/2" SHS
SCUM PUMP CHEMICAL FEED STATION (SPCFS)
SEC CLARIFIER NO. 1
A 21N01 23N01
6" SC
GAT 134
SEC CLARIFIER NO. 2
A 21N02 23N01
6" SC
GAT 135
4" SC
4" SC
4" SC
4" SC
4" SC
OXIDATION DITCH
A 23N01 20N02
SLUDGE STORAGE TANK
A 23N01 50N08

FI-750 ROTOMETER 0-20 GPM
LE-130 RADAR LEVEL TRANSMITTER 0-10 FT NL153 TYP
PMP-131 SECONDARY SCUM PUMP NO. 1 D 00N13
PMP-132 SECONDARY SCUM PUMP NO. 2 D 00N13
PI-130 PRESSURE INDICATOR 0-30 PSIG NP104 TYP
EDR-130 SCUM MIXING VALVE

REV	DATE	BY	DESCRIPTION

DESIGNED CAG
DRAWN AD
CHECKED RAM
DATE SEPT 2013

REGISTERED PROFESSIONAL ENGINEER CARLO A. GROSSO No. 16851 ELECTRICAL STATE OF CALIFORNIA 9/16/2013

carollo

SAN LUIS OBISPO COUNTY

SAN LUIS OBISPO COUNTY
LOS OSOS WATER RECYCLING FACILITY PROJECT
INSTRUMENTATION
SCUM PUMP STATION

VERIFY SCALES
BAR IS ONE INCH ON ORIGINAL DRAWING
0 1"
IF NOT ONE INCH ON THIS SHEET, ADJUST SCALES ACCORDINGLY

JOB NO. 8930A.11
DRAWING NO. 23N01
SHEET NO. 426 OF 549

LAST SAVED BY: broepken

PROJECT NO. 8930A.11 FILE NAME: 8930A1123N001.dwg

SCADA

QL1 180 SP
QL2 180 SP
QL3 180 SP
LAH 180 ALARM OVERFLOW
LAL 180 ALARM
QLH 180 SP
QLL 180 SP
LR 180 TREND
LI 180 NUM
LAH 189 ALARM
LALL 189 ALARM

QS 182 SP SPEED
HAD 182 ACTION HOA
HAT 182 ACTION SS
SIB 182 NUM SPEED
HAR 182 ACTION RESET ETM
KI 182 NUM ETM
Y2 182 ALARM FAILED
Y1 182 STATUS RUNNING
TAH 182 ALARM
YR 182 STATUS REMOTE
MAH 182 ALARM MOISTURE

QS 181 SP SPEED
HAD 181 ACTION HOA
HAT 181 ACTION SS
SIB 181 NUM SPEED
HAR 181 ACTION RESET ETM
KI 181 NUM ETM
Y2 181 ALARM FAILED
Y1 181 STATUS RUNNING
TAH 181 ALARM
YR 181 STATUS REMOTE
MAH 181 ALARM MOISTURE

QKI 181 SP HIGH TURB TIME
QAH 181 SP TURB
AAH 181 ALARM HIGH TURB
QAHH 181 SP TURB
AAHH 181 ALARM HIGH HIGH TURB
HAY 181 ACTION EABLE/DISABLE
AR 181 TREND TURB
AI 181 NUM TURB

GENERAL NOTES

1. ALL EQUIPMENT AND INSTRUMENT TAGGING ON THIS SHEET SHALL BE PRECEDED WITH FACILITY INDEX NO. 28 WHICH IS NOT SHOWN FOR CLARITY.

CONTROL PANEL

PLC I/O

L 180 AI — PLC–1
LSH 189 DI — PLC–1
LSLL 189 DI — PLC–1

HSAR 182 DI REMOTE — PLC–1
SB 182 AI SPEED IN — PLC–1
SS 182 AO SPEED OUT — PLC–1
MSH 182 DI MOISTURE — PLC–1
TSH 182 DI — PLC–1
AUX1 182 DI RUNNING — PLC–1
AUX2 182 DI FAILED — PLC–1
MS 182 DO RUN — PLC–1

HSAR 181 DI REMOTE — PLC–1
SB 181 AI SPEED IN — PLC–1
SS 181 AO SPEED OUT — PLC–1
MSH 181 DI MOISTURE — PLC–1
TSH 181 DI — PLC–1
AUX1 181 DI RUNNING — PLC–1
AUX2 181 DI FAILED — PLC–1
MS 181 DO RUN — PLC–1

A 181 AI TURB — PLC–1

OPERATOR INTERFACE/ CONTROL DEVICES

CR1 189

POWER SOURCE

CB 180 TM 120VAC–1P — PCM–1
CB 181 TM 120VAC–1P — PCM–1

FIELD

DISC 180
LIT 180
LE 180
LSH 189
LSLL 189
EL–84
EL–73.50

START HSC 182 / HSX 182 / E–STOP
LOR HSA 182
LCP 182 / PPR 182
MOISTURE MSH 182 / TSH 182 / PMP 182

START HSC 181 / HSX 181 / E–STOP
LOR HSA 181
LCP 181 / PPR 181
MOISTURE MSH 181 / TSH 181 / PMP 181

Y1 182 RUN
HSR 182 RST
YA 182 COMMON FAIL
VFD-182
VFD
480VAC-3P
MCC-C
REMOTE
LOCAL

Y1 181 RUN
HSR 181 RST
YA 181 COMMON FAIL
VFD-181
VFD
480VAC-3P
MCC-C
REMOTE
LOCAL

TO VFD-184 DWG 28N02
TO VFD-183 DWG 28N02

AIT 181 TURB
DISC 181
FIPS SAMPLE STATION (FIPSSS)
AE 181 TURB
FI 181

PI 181
PI 182
8" SE
14" SE
10" SE
1" SA
A 28N01 28N03
28N02 28N01 A

STORM WATER RETENTION POND
24" PD
GAT 188A
LE 189

CONTINUED ON DRAWING 28N02

LE–180 ULTRASONIC LEVEL METER 0–13 FT — NL171 TYP — NA900 TYP
LE–189 LEVEL FLOATS — NL100 TYP
PMP–182 FILTER INFLUENT PUMP NO. 2 — J 00N18
PMP–181 FILTER INFLUENT PUMP NO. 1 — J 00N18
PI–181 PRESSURE INDICATOR 0–30 PSIG — NP104 TYP
PI–182 PRESSURE INDICATOR 0–30 PSIG — NP104 TYP
AE–181 TURBIDITY 0–40 NTU — NA030 TYP — NA900 TYP
FI–181 ROTOMETER 200–750 ml/min

REV	DATE	BY	DESCRIPTION

DESIGNED PCK
DRAWN ANW
CHECKED RAM
DATE SEPT 2013

REGISTERED PROFESSIONAL ENGINEER CARLO A. GROSSO No. 18851 ELECTRICAL STATE OF CALIFORNIA 9/16/2013

carollo

SAN LUIS OBISPO COUNTY

SAN LUIS OBISPO COUNTY
LOS OSOS WATER RECYCLING FACILITY PROJECT
INSTRUMENTATION
FILTER INFLUENT PUMP STATION - 1

VERIFY SCALES
BAR IS ONE INCH ON ORIGINAL DRAWING
0 1"
IF NOT ONE INCH ON THIS SHEET, ADJUST SCALES ACCORDINGLY

JOB NO. 8930A.11
DRAWING NO. 28N01
SHEET NO. 427 OF 549

LAST SAVED BY: broepken

PROJECT NO. 8930A.11 FILE NAME: 8930A1128N001.dwg

SCADA

CONTROL PANEL
PLC I/O

OPERATOR INTERFACE/ CONTROL DEVICES

POWER SOURCE

FIELD

YOC 188 STATUS OC
YR 188 STATUS REMOTE
ZI 188 NUM POSITION
HAD 188 ACTION HOA
HAK 188 ACTION MODULATE

QS 184 SP SPEED
SIB 184 NUM SPEED
Y2 184 ALARM FAILED
YR 184 STATUS REMOTE
HAD 184 ACTION HOA
HAR 184 ACTION RESET ETM
Y1 184 STATUS RUNNING
MAH 184 ALARM MOISTURE
HAT 184 ACTION SS
KI 184 NUM ETM
TAH 184 ALARM

QS 183 SP SPEED
SIB 183 NUM SPEED
Y2 183 ALARM FAILED
YR 183 STATUS REMOTE
HAD 183 ACTION HOA
HAR 183 ACTION RESET ETM
Y1 183 STATUS RUNNING
MAH 183 ALARM MOISTURE
HAT 183 ACTION SS
KI 183 NUM ETM
TAH 183 ALARM

MSC 188 DO CLOSE PLC
HSAR 188 DI REMOTE PLC
ZSO 188 DI OPENED PLC
ZSC 188 DI CLOSED PLC
Z2 188 AO POSITION PLC
Z1 188 AI POSITION PLC

HSAR 184 DI REMOTE PLC-1
SB 184 AI SPEED IN PLC-1
SS 184 AO SPEED OUT PLC-1
MSH 184 DI MOISTURE PLC-1
TSH 184 DI PLC-1
AUX1 184 DI RUNNING PLC-1
AUX2 184 DI FAILED PLC-1
MS 184 DO RUN PLC-1

HSAR 183 DI REMOTE PLC-1
SB 183 AI SPEED IN PLC-1
SS 183 AO SPEED OUT PLC-1
MSH 183 DI MOISTURE PLC-1
TSH 183 DI PLC-1
AUX1 183 DI RUNNING PLC-1
AUX2 183 DI FAILED PLC-1
MS 183 DO RUN PLC-1

Y1 184 RUN
HSR 184 RST
YA 184 COMMON FAIL

Y1 183 RUN
HSR 183 RST
YA 183 COMMON FAIL

FROM DWG 28N01
FROM DWG 28N01
REMOTE
LOCAL
VFD-184
VFD
480VAC-3P
MCC-D

REMOTE
LOCAL
VFD-183
VFD
480VAC-3P
MCC-D

CB 188 TM 480VAC-3P MCC-C

HSX 184 E-STOP
HSC 184 START
HSA 184 LOR
LCP 184
PPR 184
MSH 184 MOISTURE
PMP 184
TSH 184

HSX 183 E-STOP
HSC 183 START
HSA 183 LOR
LCP 183
PPR 183
MSH 183 MOISTURE
PMP 183
TSH 183

ZSOC 188
ZT 188
HSG 188 OSC
HSA 188 LOR
EAM 188
DISC 188

CONTINUED ON DRAWING 28N01

PI 183
PI 184
28N02 28N01 A

SECONDARY CLARIFIERS
A 21N02 28N02
24" SE
8" SE
10" SE

GAT 188B

HOSE BIB
PLANT WATER
4" PW
FM
VAL 188

EAM–188
PLANT WATER SUPPLEMENTAL FLOW VALVE

PMP–184
FILTER INFLUENT PUMP NO. 4
J 00N18

PMP–183
FILTER INFLUENT PUMP NO. 3
J 00N18

PI–184
PRESSURE INDICATOR 0–30 PSIG
NP104 TYP

PI–183
PRESSURE INDICATOR 0–30 PSIG
NP104 TYP

GENERAL NOTES

1. ALL EQUIPMENT AND INSTRUMENT TAGGING ON THIS SHEET SHALL BE PRECEDED WITH FACILITY INDEX NO. 28 WHICH IS NOT SHOWN FOR CLARITY.

REV	DATE	BY	DESCRIPTION

DESIGNED PCK
DRAWN CGR
CHECKED RAM
DATE SEPT 2013

REGISTERED PROFESSIONAL ENGINEER CARLO A. GROSSO No. 18851 ELECTRICAL STATE OF CALIFORNIA 9/16/2013

carollo

SAN LUIS OBISPO COUNTY

SAN LUIS OBISPO COUNTY
LOS OSOS WATER RECYCLING FACILITY PROJECT
INSTRUMENTATION
FILTER INFLUENT PUMP STATION - 2

VERIFY SCALES
BAR IS ONE INCH ON ORIGINAL DRAWING
0 1"
IF NOT ONE INCH ON THIS SHEET, ADJUST SCALES ACCORDINGLY

JOB NO. 8930A.11
DRAWING NO. 28N02
SHEET NO. 428 OF 549

LAST SAVED BY: broepken

PROJECT NO. 8930A.11 FILE NAME: 8930A1128N002.dwg

GENERAL NOTES

1. ALL EQUIPMENT AND INSTRUMENT TAGGING ON THIS SHEET SHALL BE PRECEDED WITH FACILITY INDEX NO. 28 WHICH IS NOT SHOWN FOR CLARITY.

SCADA

FAH 186 ALARM
FR 186 TREND
QFH 186 SP
FAL 186 ALARM
FI 186 NUM
QFL 186 SP

YR 186 STATUS REMOTE
TAH 186 ALARM
HAD 186 ACTION HOA
HAR 186 ACTION RESET ETM
Y2 186 ALARM FAILED
HAT 186 ACTION SS
KI 186 NUM ETM
Y1 186 STATUS RUNNING

PAH 186 ALARM PRESS

YR 185 STATUS REMOTE
TAH 185 ALARM
HAD 185 ACTION HOA
HAR 185 ACTION RESET ETM
Y2 185 ALARM FAILED
HAT 185 ACTION SS
KI 185 NUM ETM
Y1 185 STATUS RUNNING

PAH 185 ALARM PRESS

CONTROL PANEL
PLC I/O

F 186 AI PLC

HSAR 186 DI REMOTE PLC-1
MS 186 DO RUN PLC-1
TSH 186 DI TEMP PLC-1
AUX2 186 DI OL PLC-1
AUX1 186 DI RUNNING PLC-1

PSH 186 DI PRESS PLC-1

HSAR 185 DI REMOTE PLC-1
MS 185 DO RUN PLC-1
TSH 185 DI TEMP PLC-1
AUX2 185 DI OL PLC-1
AUX1 185 DI RUNNING PLC-1

PSH 185 DI PRESS PLC-1

OPERATOR INTERFACE/ CONTROL DEVICES

POWER SOURCE

CB 186 TM 120VAC-1P PCM

Y1 186 RUN
HSR 186 RST
YA 186 COMMON FAIL
MS-186
FVNR
480VAC-3P
MCC-D

Y1 185 RUN
HSR 185 RST
YA 185 COMMON FAIL
MS-185
FVNR
480VAC-3P
MCC-C

FIELD

FIT 186
DISC 186 TM 120VAC-1P
FE 186

HSC 186 START
HSX 186 E-STOP
LCP 186
HSA 186 LOR

PMP 186
MWH 186
TSH 186

PI 186
PE 186
PSH 186

HSC 185 START
HSX 185 E-STOP
LCP 185
HSA 185 LOR

PMP 185
MWH 185
TSH 185

PI 185
PE 185
PSH 185

PI 187

3" SE
2" SE
3" SE
2" SE

A 28N01 28N03
14" SE
MM
10" SE
14" SE
18" SE
A 28N03 30N01

B 32N02 28N03
1/2" ALUM

FE-186 FLOW METER 0-2800 GPM 10" NA900 TYP NF130 TYP NF135 TYP NF137 TYP

PI-187 PRESSURE INDICATOR 0-30 PSIG NP104 TYP

PMP-186 FLASH MIX PUMP NO. 2 5HP 480VAC 3PH H 00N16

PI-186 PRESSURE INDICATOR 0-60 PSIG

PE-186 PRESSURE SWITCH HIGH 25 PSIG OPEN NP501 TYP

PMP-185 FLASH MIX PUMP NO. 1 5HP 480VAC 3PH H 00N16

PI-185 PRESSURE INDICATOR 0-60 PSIG

PE-185 PRESSURE SWITCH HIGH 25 PSIG OPEN NP501 TYP

REV	DATE	BY	DESCRIPTION

DESIGNED PCK
DRAWN CGR
CHECKED RAM
DATE SEPT 2013

REGISTERED PROFESSIONAL ENGINEER CARLO A. RAMOS No. 18851 ELECTRICAL STATE OF CALIFORNIA 9/16/2013

carollo

SAN LUIS OBISPO COUNTY

SAN LUIS OBISPO COUNTY
LOS OSOS WATER RECYCLING FACILITY PROJECT
INSTRUMENTATION
FILTER INFLUENT PUMP STATION - 3

VERIFY SCALES
BAR IS ONE INCH ON ORIGINAL DRAWING
0 1"
IF NOT ONE INCH ON THIS SHEET, ADJUST SCALES ACCORDINGLY

JOB NO. 8930A.11
DRAWING NO. 28N03
SHEET NO. 429 OF 549

LAST SAVED BY: broepken

PROJECT NO. 8930A.11 FILE NAME: 8930A1128N003.dwg

SCADA

CONTROL PANEL

PLC I/O

OPERATOR INTERFACE/ CONTROL DEVICES

POWER SOURCE

FIELD

31-HAY 230 ACTION ENABLE/DISABLE

31-AR 230 TREND TURB

31-AAHH 230 ALARM HIGH HIGH

31-QAHH 230 SP TURB

31-QAH1 230 SP TURB

31-QK1 230 SP HIGH TURB TIME

31-AI 230 NUM TURB

31-AAH 230 ALARM HIGH TURB

31-QAH2 230 SP TURB

31-QK2 230 SP HIGH TURB TIME

31-A 230 AI TURB

PLC-1

31-CB 230 TM 120VAC-1P

PCM-1

31-DISC 230

31-AIT 230 TURB

31-AE 230 TURB

31-FI 230

FILTER INLFUENT PUMP STATION

A 28N03 30N01

18" SE

M M

FLOCCULATION BASIN (FUTURE)

18" SE

TERTIARY FILTER NO. 1 (SEE DWG 30N02)

18" SE

TERTIARY FILTER NO. 2 (SEE DWG 30N03)

20" PD

6" PD

18" FE

20" PD

6" PD

18" FE

20" PD

STORMWATER POND D 30N01 04N02

6" PD

PLANT DRAIN PS E 30N01 04N01

18" FE

UV SYSTEM F 30N01 31N01

31-FI-230 ROTOMETER 200-750 ml/min

31-AE-230 TURBIDITY 0-40 NTU

NA030 TYP

NA900 TYP

REV	DATE	BY	DESCRIPTION

DESIGNED PCK

DRAWN CGR

CHECKED RAM

DATE SEPT 2013

REGISTERED PROFESSIONAL ENGINEER CARLO A. GROSSO No. 18851 ELECTRICAL STATE OF CALIFORNIA 9/16/2013

carollo

COUNTY OF SAN LUIS OBISPO 1850 CENTRAL COAST CALIFORNIA

SAN LUIS OBISPO COUNTY

SAN LUIS OBISPO COUNTY

LOS OSOS WATER RECYCLING FACILITY PROJECT

INSTRUMENTATION

TERTIARY FILTRATION OVERVIEW

VERIFY SCALES

BAR IS ONE INCH ON ORIGINAL DRAWING

0 1"

IF NOT ONE INCH ON THIS SHEET, ADJUST SCALES ACCORDINGLY

JOB NO. 8930A.11

DRAWING NO. 30N01

SHEET NO. 430 OF 549

LAST SAVED BY: broepken

PROJECT NO. 8930A.11 FILE NAME: 8930A1130N001.dwg

SCADA

HAL 210 ACTION OLOL
QK 210 FILTER SP BACKWASH PERMISSIVE TIME
YR 211 STATUS REMOTE
YOC 211 STATUS OC
HAD 211 ACTION HOA
HAO 211 ACTION OC
LAHH 210 ALARM HI HI LVL
LAH 210 ALARM HI LVL
LAL 210 ALARM LO LVL SL WASTE CYCLE
LI 210 NUM
YS 210 STATUS SLUDGE CYCLE
LAL 210A ALARM LO LVL BACKWASH CYCLE
YF 210 STATUS FILTERING
Y1 210 STATUS BACKWASH READY
YB 210 STATUS BACKWASH
PI 210 NUM
PAH 210 ALARM
Y2 210 ALARM COMMON FAIL
ZLO 212 STATUS OPENED
ZLC 212 STATUS CLOSED
Y2 212 ALARM FAILED
ZLO 213A STATUS OPENED
ZLC 213A STATUS CLOSED
Y2 213A ALARM FAILED
ZLO 213B STATUS OPENED
ZLC 213B STATUS CLOSED
Y2 213B ALARM FAILED
ZLO 213C STATUS OPENED
ZLC 213C STATUS CLOSED
Y2 213C ALARM FAILED
ZLO 213D STATUS OPENED
ZLC 213D STATUS CLOSED
Y2 213D ALARM FAILED
ZLO 213E STATUS OPENED
ZLC 213E STATUS CLOSED
Y2 213E ALARM FAILED
TAH 214 ALARM
Y1 214 STATUS RUNNING
Y2 214 ALARM FAILED
TAH 215 ALARM
Y1 215 STATUS RUNNING
Y2 215 ALARM FAILED
TAH 216 ALARM
Y1 216 STATUS RUNNING
Y2 216 ALARM FAILED

CONTROL PANEL
PLC I/O
MSO 211 DO OPEN PLC–1
MSC 211 DO CLOSE PLC–1
HSAR 211 DI REMOTE PLC–1
ZSC 211 DI CLOSED PLC–1
ZSO 211 DI OPENED PLC–1
OPERATOR INTERFACE/ CONTROL DEVICES
UC 210 ENET VCP–210 PLC–1
BACKWASH READY FILTER HIGH LOW
A 30N02 03N01

MCC
CB 211 TM 480VAC–3P MCC–C
CB 210 TM 480VAC–3P MCC–C

FIELD
VCP 210
VENDOR PACKAGE FBTFS
LT 210
LE 210
LSH 210
ZSOC 211
HSG 211 OSC
HSA 211 LOR
EDR 211
DISC 211
SEE DRAWING 30N01 FOR CONTINUATION
18" SE
VAL 211
3" PD
TERTIARY FILTER NO. 1
MWH 216
MTR 216
TSH 216
M
MTR–216 TF NO. 1 DRIVE MOTOR
20" PD
6" PD
CONTINUED ON DRAWING 30N01
3" FBW
18" FE
PT 210
PE 210
TF NO.1 SOLIDS VLV
VAL 212
TF NO.1 BACKWASH VLV NO.1
VAL 213A
TF NO.1 BACKWASH VLV NO.2
VAL 213B
TF NO.1 BACKWASH VLV NO.3
VAL 213C
TF NO.1 BACKWASH VLV NO.4
VAL 213D
TF NO.1 BACKWASH VLV NO.5
VAL 213E
PI 214A
PMP 214
MWH 214
TSH 214
PI 214B
PMP–214 TF NO.1 SOLIDS/BACKWASH PUMP NO.1
PI 215A
PMP 215
MWH 215
TSH 215
PI 215B
PMP–215 TF NO.1 BACKWASH PUMP NO.2
EDR–211 TERTIARY FILTER NO. 1 INLET VALVE

GENERAL NOTES

1. ALL EQUIPMENT AND INSTRUMENT TAGGING ON THIS SHEET SHALL BE PRECEDED WITH FACILITY INDEX NO. 30, WHICH IS NOT SHOWN FOR CLARITY.

KEY NOTES

1. SCADA I/O POINTS, ALARMS, SET POINTS AND COMMANDS ARE BASED ON SELECTION OF AQUA–AEROBIC SYSTEM, AQUADISK MODEL ADFSP–54X10E–PC.
2. INTERCONNECTING PIPING AND MANUAL VALVES FURNISHED BY CONTRACTOR UNLESS OTHERWISE NOTED.
3. MANUAL VALVE FURNISHED BY TERTIARY FILTER SUPPLIER. INSTALLED BY CONTRACTOR.

REV	DATE	BY	DESCRIPTION

DESIGNED PCK
DRAWN BJT
CHECKED RAM
DATE SEPT 2013

REGISTERED PROFESSIONAL ENGINEER CARLO A. GROSS No. 18851 ELECTRICAL STATE OF CALIFORNIA 9/16/2013

carollo

SAN LUIS OBISPO COUNTY

SAN LUIS OBISPO COUNTY
LOS OSOS WATER RECYCLING FACILITY PROJECT
INSTRUMENTATION
TERTIARY FILTER NO. 1

VERIFY SCALES
BAR IS ONE INCH ON ORIGINAL DRAWING
0 1"
IF NOT ONE INCH ON THIS SHEET, ADJUST SCALES ACCORDINGLY

JOB NO. 8930A.11
DRAWING NO. 30N02
SHEET NO. 431 OF 549

LAST SAVED BY: broepken

PROJECT NO. 8930A.11 FILE NAME: 8930A1130N002.dwg

SCADA

HAL 220 ACTION OLOL
QK 220 FILTER SP BACKWASH PERMISSIVE TIME
YR 221 STATUS REMOTE
HAD 221 ACTION HOA
YOC 221 STATUS OC
HAO 221 ACTION OC
LAHH 220 ALARM HI HI LVL
LAH 220 ALARM HI LVL
LAL 220 ALARM LO LVL SL WASTE CYCLE
LI 220 NUM
YS 220 STATUS SLUDGE CYCLE
LAL 220A ALARM LO LVL BACKWASH CYCLE
YF 220 STATUS FILTERING
Y1 220 STATUS BACKWASH READY
YB 220 STATUS BACKWASH
PI 220 NUM
PAH 220 ALARM
Y2 220 ALARM COMMON FAIL
ZLO 222 STATUS OPENED
ZLC 222 STATUS CLOSED
Y2 222 ALARM FAILED
ZLO 223A STATUS OPENED
ZLC 223A STATUS CLOSED
Y2 223A ALARM FAILED
ZLO 223B STATUS OPENED
ZLC 223B STATUS CLOSED
Y2 223B ALARM FAILED
ZLO 223C STATUS OPENED
ZLC 223C STATUS CLOSED
Y2 223C ALARM FAILED
ZLO 223D STATUS OPENED
ZLC 223D STATUS CLOSED
Y2 223D ALARM FAILED
ZLO 223E STATUS OPENED
ZLC 223E STATUS CLOSED
Y2 223E ALARM FAILED
TAH 224 ALARM
Y1 224 STATUS RUNNING
Y2 224 ALARM FAILED
TAH 225 ALARM
Y1 225 STATUS RUNNING
Y2 225 ALARM FAILED
TAH 226 ALARM
Y1 226 STATUS RUNNING
Y2 226 ALARM FAILED

CONTROL PANEL
PLC I/O
MSO 221 DO OPEN PLC-1
MSC 221 DO CLOSE PLC-1
HSAR 221 DI REMOTE PLC-1
ZSC 221 DI CLOSED PLC-1
ZSO 221 DI OPENED PLC-1
OPERATOR INTERFACE/ CONTROL DEVICES
BACKWASH READY
FILTER HIGH LOW
A 30N03 03N01
UC 220 ENET VCP-220 PLC-1

MCC
CB 221 TM 480VAC-3P MCC-D
CB 220 TM 480VAC-3P MCC-D

FIELD
VCP 220
VENDOR PACKAGE FBTFS
LT 220
LE 220
LSH 220
MWH 226
MTR 226
TSH 226
20" PD
6" PD
TERTIARY FILTER NO. 2
M MTR-226 TF NO. 2 DRIVE MOTOR
CONTINUED ON DRAWING 30N01
ZSOC 221
OSC
HSG 221
LOR
HSA 221
EDR 221
DISC 221
SEE DRAWING 30N01 FOR CONTINUATION
18" SE
VAL 221
3" PD
3" FBW
18" FE
PT 220
PE 220
TF NO.2 SOLIDS VLV
VAL 222
TF NO.2 BACKWASH VLV NO.1
VAL 223A
TF NO.2 BACKWASH VLV NO.2
VAL 223B
TF NO.2 BACKWASH VLV NO.3
VAL 223C
TF NO.2 BACKWASH VLV NO.4
VAL 223D
TF NO.2 BACKWASH VLV NO.5
VAL 223E
PI 224A
MWH 224
PMP 224
TSH 224
PI 224B
PMP-224 TF NO.2 SOLIDS/BACKWASH PUMP NO.1
PI 225A
MWH 225
PMP 225
TSH 225
PI 225B
PMP-225 TF NO.2 BACKWASH PUMP NO.2
EDR-221 TERTIARY FILTER NO. 1 INLET VALVE

GENERAL NOTES

1. ALL EQUIPMENT AND INSTRUMENT TAGGING ON THIS SHEET SHALL BE PRECEDED WITH FACILITY INDEX NO. 30, WHICH IS NOT SHOWN FOR CLARITY.

KEY NOTES

1. SCADA I/O POINTS, ALARMS, SET POINTS AND COMMANDS ARE BASED ON SELECTION OF AQUA-AEROBIC SYSTEM, AQUADISK MODEL ADFSP-54X10E-PC.
2. INTERCONNECTING PIPING AND MANUAL VALVES FURNISHED BY CONTRACTOR UNLESS OTHERWISE NOTED.
3. MANUAL VALVE FURNISHED BY TERTIARY FILTER SUPPLIER. INSTALLED BY CONTRACTOR.

REV	DATE	BY	DESCRIPTION

DESIGNED PCK
DRAWN BJT
CHECKED RAM
DATE SEPT 2013

REGISTERED PROFESSIONAL ENGINEER CARLO A. GRONG No. 18851 ELECTRICAL STATE OF CALIFORNIA 9/16/2013

carollo

SAN LUIS OBISPO COUNTY

SAN LUIS OBISPO COUNTY
LOS OSOS WATER RECYCLING FACILITY PROJECT
INSTRUMENTATION
TERTIARY FILTER NO. 2

VERIFY SCALES
BAR IS ONE INCH ON ORIGINAL DRAWING
0 1"
IF NOT ONE INCH ON THIS SHEET, ADJUST SCALES ACCORDINGLY

JOB NO. 8930A.11
DRAWING NO. 30N03
SHEET NO. 432 OF 549

LAST SAVED BY: broepken

PROJECT NO. 8930A.11 FILE NAME: 8930A1130N003.dwg

SCADA

HAD 247 ACTION HOA
HAO 247 ACTION OC
YR 247 STATUS REMOTE
YOC 247 STATUS OC

HAD 240 ACTION HOA
HAO 240 ACTION OC
YR 240 STATUS REMOTE
YOC 240 STATUS OC

(1) (3)
YOC 244 STATUS OC
YR 244 STATUS REMOTE
ZI 244 NUM POSITION
HAD 244 ACTION HOA
HAK 244 ACTION JOJC
AALL 240 ALARM UVT
AAL 240 ALARM UVT
AI 240 NUM UVT
QFH 241 SP
QFL 241 SP
FAH 241 ALARM
FAL 241 ALARM
FR 241 TREND
FI 241 NUM
LR 241 TREND
LI 241 NUM
QLH 241 SP
QLL 241 SP
LAH 241 ALARM CHANNEL LEVEL
LAL 241

Y1 241A STATUS LAMP ON
YAW 241A ALARM LAMP WIPER FAIL
YAH2 241A ALARM LAMP COUNT LOW
YAH3 241A ALARM MULTILAMP FAIL
YAH4 241A ALARM ADJ LAMP FAIL
LAL 241A ALARM
YAH1 241A ALARM BANK 1 FAILED
Y1 241A STATUS BANK ON
JC 241A SP BANK POWER
AC 241A SP UV DOSE
AALL 241A ALARM UV
AAL 241A ALARM UV
AI 241A NUM UV

Y1 241B STATUS LAMP ON
YAW 241B ALARM LAMP WIPER FAIL
YAH2 241B ALARM LAMP COUNT LOW
YAH3 241B ALARM MULTILAMP FAIL
YAH4 241B ALARM ADJ LAMP FAIL
LAL 241B ALARM
YAH1 241B ALARM BANK 1 FAILED
Y1 241B STATUS BANK ON
JC 241B SP BANK POWER
AC 241B SP UV DOSE
AALL 241B ALARM UV
AAL 241B ALARM UV
AI 241B NUM UV

Y1 241C STATUS LAMP ON
YAW 241C ALARM LAMP WIPER FAIL
YAH2 241C ALARM LAMP COUNT LOW
YAH3 241C ALARM MULTILAMP FAIL
YAH4 241C ALARM ADJ LAMP FAIL
LAL 241C ALARM
YAH1 241C ALARM BANK 1 FAILED
Y1 241C STATUS BANK ON
JC 241C SP BANK POWER
AC 241C SP UV DOSE
AALL 241C ALARM UV
AAL 241C ALARM UV
AI 241C NUM UV

CONTROL PANEL

PLC I/O

MSC 247 DO CLOSE PLC–1
MSO 247 DO OPEN PLC–1
HSAR 247 DI REMOTE PLC–1
ZSO 247 DI OPENED PLC–1
ZSC 247 DI CLOSED PLC–1

MSC 240 DO CLOSE PLC–1
MSO 240 DO OPEN PLC–1
HSAR 240 DI REMOTE PLC–1
ZSO 240 DI OPENED PLC–1
ZSC 240 DI CLOSED PLC–1

A 30N02 31N01 BACKWASH READY FILTER HIGH FLOW
A 30N03 31N01 BACKWASH READY FILTER HIGH FLOW
UC 240 ENET VCP–240 PLC–1

POWER SOURCE

CB 247 TM 480VAC–3P MCC–C
CB 240 TM 480VAC–3P MCC–C
CB 240 TM 120VAC–1P LP–BD
CB 244 TM 480VAC–3P MCC–C
CB 241A TM 480/277VAC–3P MCC–C
CB 241B TM 480/277VAC–3P MCC–C
CB 241C TM 480/277VAC–3P MCC–C

FIELD

ZSOC 247 OSC HSG 247 LOR HSA 247 EDR 247 DISC 247
ZSOC 240 OSC HSG 240 LOR HSA 240 EDR 240 DISC 240

UVDCC 240 UV SYSTEM MASTER PLC – PARTIAL

AIT 240 UVT AE 240 UVT DISC 240
ZT 244 ZSOC 244 OSC HSG 244 LOR HSA 244 DISC 244 EDM 244
FIT 241 FE 241 DISCA 240
LIT 241 LE 241 DISCB 240

UVPDC 241A POWER DISTRIBUTION CENTER UV BANK 1–1
UVPDC 241B POWER DISTRIBUTION CENTER UV BANK 1–2
UVPDC 241C POWER DISTRIBUTION CENTER UV BANK 1–3
DRV 241A LIT 241A AIT 241A LE 241A AE 241A UVI
DRV 241B LIT 241B AIT 241B LE 241B AE 241B UVI
DRV 241C LIT 241C AIT 241C LE 241C AE 241C UVI
CL UVL

HD DH DH DH DH DH DH DH DH DH DH
UV CH2 PDC D 31N01 31N02

VENDOR PACKAGE (FBUVS)

TERTIARY FILTERS F 30N01 31N01 18" FE
12" FE VAL 244 10" FE MM
12" FE TO UV DISINFECTION CHANNEL NO. 2 A 31N01 31N02
12" FE TO UV DISINFECTION CHANNEL NO. 3 B 31N01 31N03
18" PD TO STORMWATER POND
VAL 240
PLANT WATER 6" PW VAL 247
BAFFLE PLATE
CHANNEL NO. 1 UVCH1
UVR
UV BANK 1-1 UVBNK11
UV BANK 1-2 UVBNK12
UV BANK 1-3 UVBNK13
4" PD PLANT DRAIN PS D 31N01 31N03

1" SHS FI 288
CHEMICAL FACILITY 32N09 31N01 A
REW STORAGE POND C 31N01 03N01
24" REW
UV EFFLUENT CHANNEL
CONTINUE ON DWG 31N02

EDR–247 UV CHANNEL NO.1 PW RE–FILL VALVE
EDR–240 TERTIARY FILTER–TO–WASTE VALVE
EDM–244 UV CHANNEL NO. 1 INLET VALVE
AE–240 UV TRANSMITTANCE METER
FE–241 FLOW METER 0–1460 GPM 10" NA900 TYP NF130 TYP NF136 TYP NL137 TYP
LE–241 ULTRASONIC LEVEL METER 0–6 FT NL182 TYP NA900 TYP
DRV–241A VALVE
LE–241A ULTRASONIC LEVEL METER
AE–241A UV INTENSITY
DRV–241B VALVE
LE–241B ULTRASONIC LEVEL METER
AE–241B UV INTENSITY
DRV–241C VALVE
LE–241C ULTRASONIC LEVEL METER
AE–241C UV INTENSITY
FI–288 ROTOMETER 0–24 GPH

GENERAL NOTES

1. ALL EQUIPMENT AND INSTRUMENT TAGGING ON THIS SHEET SHALL BE PRECEDED WITH FACILITY INDEX NO. 31 WHICH IS NOT SHOWN FOR CLARITY.

CL = CLEANING UNIT
UVR = UV REACTOR
UVL = UV LOW PRESSURE AMALGAM LAMPS

KEY NOTES

(1) SCADA INFORMATION SHOWN ON DRAWING IS FOR REFERENCE ONLY. REFER TO SECTION 11287 AND COORDINATE FINAL SCADA POINTS WITH UV MANUFACTURER FOR COMPLETE LIST OF SCADA POINTS.

(2) 120VAC-1P SUPPLY.

(3) SCADA I/O POINTS, ALARMS, SET POINTS AND COMMANDS ARE BASED ON SELECTION OF CALGON CARBON CORPORATION, MODEL C^3 500D, UV SYSTEM. CONTRACTOR/INTERGRATOR SHALL ADJUST AND MODIFY ACCORDINGLY IF OTHER UV SYSTEM SHALL BE INSTALLED.

(4) LOSS OF POWER SIGNAL ALARM.

REV	DATE	BY	DESCRIPTION

DESIGNED PCK
DRAWN CGR
CHECKED RAM
DATE SEPT 2013

REGISTERED PROFESSIONAL ENGINEER CARLO A. GRONG No. 15851 ELECTRICAL STATE OF CALIFORNIA 9/16/2013

carollo

SAN LUIS OBISPO COUNTY

SAN LUIS OBISPO COUNTY
LOS OSOS WATER RECYCLING FACILITY PROJECT
INSTRUMENTATION
UV DISINFECTION CHANNEL NO. 1

VERIFY SCALES
BAR IS ONE INCH ON ORIGINAL DRAWING
0 1"
IF NOT ONE INCH ON THIS SHEET, ADJUST SCALES ACCORDINGLY

JOB NO. 8930A.11
DRAWING NO. 31N01
SHEET NO. 433 OF 549

LAST SAVED BY: broepken

PROJECT NO. 8930A.11 FILE NAME: 8930A1131N001.dwg

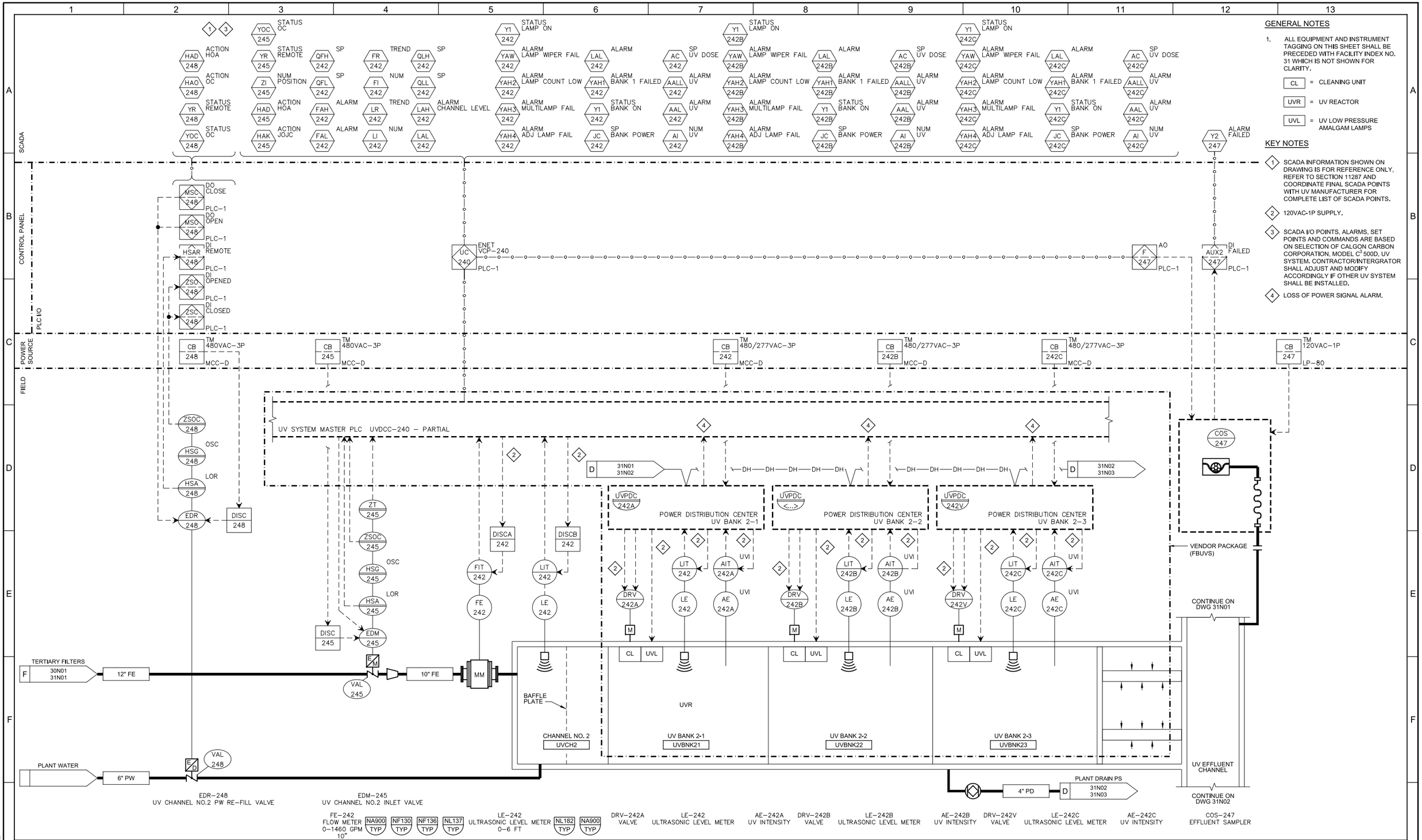

EDR–248
UV CHANNEL NO.2 PW RE–FILL VALVE

EDM–245
UV CHANNEL NO.2 INLET VALVE

FE–242
FLOW METER
0–1460 GPM
10"

NA900 TYP | NF130 TYP | NF136 TYP | NL137 TYP

LE–242
ULTRASONIC LEVEL METER
0–6 FT

NL182 TYP | NA900 TYP

DRV–242A
VALVE

LE–242
ULTRASONIC LEVEL METER

AE–242A
UV INTENSITY

DRV–242B
VALVE

LE–242B
ULTRASONIC LEVEL METER

AE–242B
UV INTENSITY

DRV–242V
VALVE

LE–242C
ULTRASONIC LEVEL METER

AE–242C
UV INTENSITY

COS–247
EFFLUENT SAMPLER

GENERAL NOTES

1. ALL EQUIPMENT AND INSTRUMENT TAGGING ON THIS SHEET SHALL BE PRECEDED WITH FACILITY INDEX NO. 31 WHICH IS NOT SHOWN FOR CLARITY.

CL = CLEANING UNIT

UVR = UV REACTOR

UVL = UV LOW PRESSURE AMALGAM LAMPS

KEY NOTES

1. SCADA INFORMATION SHOWN ON DRAWING IS FOR REFERENCE ONLY. REFER TO SECTION 11287 AND COORDINATE FINAL SCADA POINTS WITH UV MANUFACTURER FOR COMPLETE LIST OF SCADA POINTS.
2. 120VAC-1P SUPPLY.
3. SCADA I/O POINTS, ALARMS, SET POINTS AND COMMANDS ARE BASED ON SELECTION OF CALGON CARBON CORPORATION, MODEL C^{3}500D, UV SYSTEM. CONTRACTOR/INTERGRATOR SHALL ADJUST AND MODIFY ACCORDINGLY IF OTHER UV SYSTEM SHALL BE INSTALLED.
4. LOSS OF POWER SIGNAL ALARM.

REV	DATE	BY	DESCRIPTION

DESIGNED PCK
DRAWN CGR
CHECKED RAM
DATE SEPT 2013

REGISTERED PROFESSIONAL ENGINEER CARLO A. GRIOLI No. 16851 ELECTRICAL STATE OF CALIFORNIA 9/16/2013

carollo

SAN LUIS OBISPO COUNTY

SAN LUIS OBISPO COUNTY

LOS OSOS WATER RECYCLING FACILITY PROJECT

INSTRUMENTATION

UV DISINFECTION CHANNEL NO. 2

VERIFY SCALES
BAR IS ONE INCH ON ORIGINAL DRAWING
0 1"
IF NOT ONE INCH ON THIS SHEET, ADJUST SCALES ACCORDINGLY

JOB NO. 8930A.11
DRAWING NO. 31N02
SHEET NO. 434 OF 549

LAST SAVED BY: broepken

PROJECT NO. 8930A.11 FILE NAME: 8930A1131N002.dwg

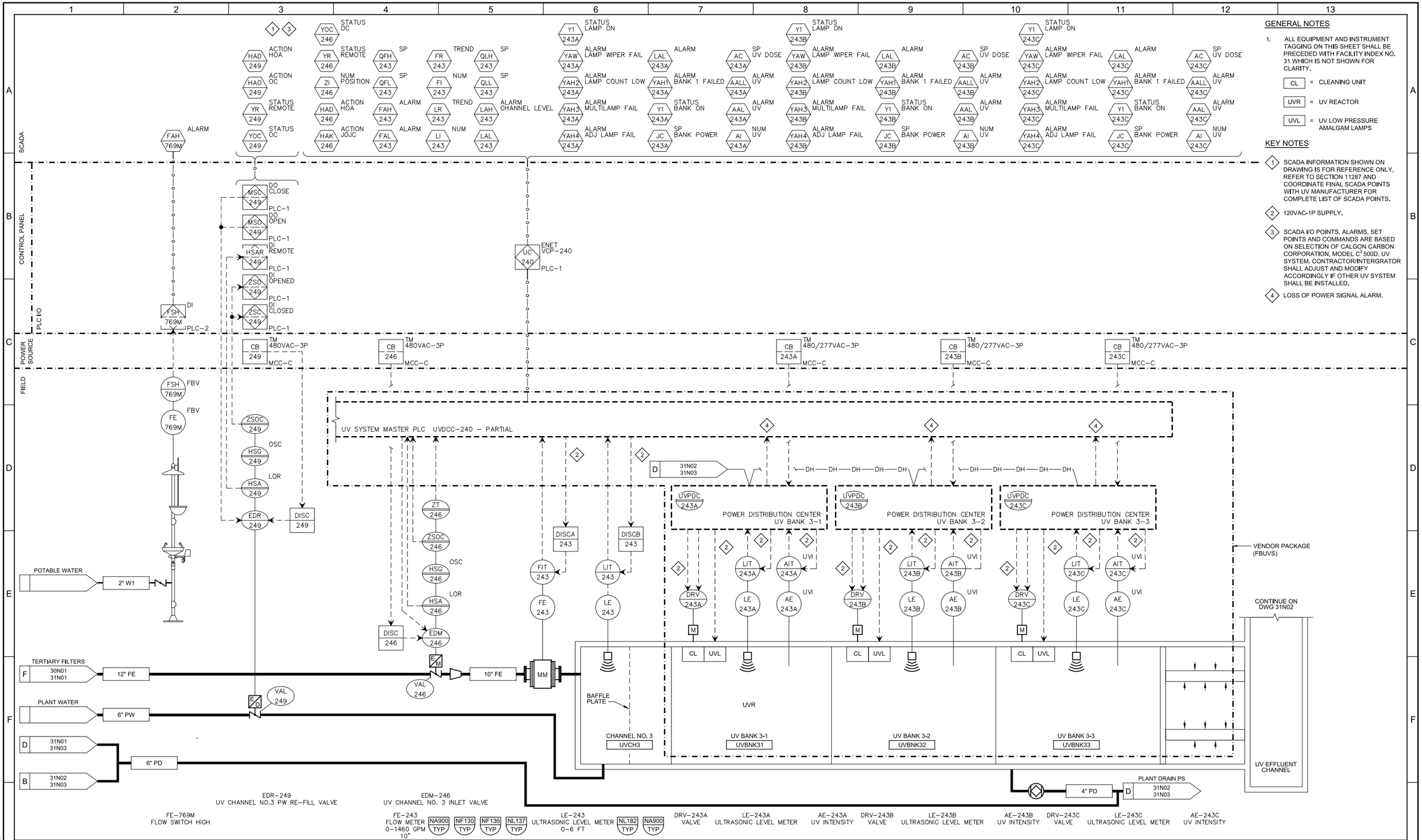

GENERAL NOTES

1. ALL EQUIPMENT AND INSTRUMENT TAGGING ON THIS SHEET SHALL BE PRECEDED WITH FACILITY INDEX NO. 31 WHICH IS NOT SHOWN FOR CLARITY.

CL = CLEANING UNIT

UVR = UV REACTOR

UVL = UV LOW PRESSURE AMALGAM LAMPS

KEY NOTES

1. SCADA INFORMATION SHOWN ON DRAWING IS FOR REFERENCE ONLY. REFER TO SECTION 11287 AND COORDINATE FINAL SCADA POINTS WITH UV MANUFACTURER FOR COMPLETE LIST OF SCADA POINTS.
2. 120VAC-1P SUPPLY.
3. SCADA I/O POINTS, ALARMS, SET POINTS AND COMMANDS ARE BASED ON SELECTION OF CALGON CARBON CORPORATION, MODEL $C^3$500D, UV SYSTEM. CONTRACTOR/INTERGRATOR SHALL ADJUST AND MODIFY ACCORDINGLY IF OTHER UV SYSTEM SHALL BE INSTALLED.
4. LOSS OF POWER SIGNAL ALARM.

REV	DATE	BY	DESCRIPTION

DESIGNED PCK
DRAWN CGR
CHECKED RAM
DATE SEPT 2013

REGISTERED PROFESSIONAL ENGINEER CARLO A. GRAG No. 16851 ELECTRICAL STATE OF CALIFORNIA 9/16/2013

carollo

SAN LUIS OBISPO COUNTY

SAN LUIS OBISPO COUNTY

LOS OSOS WATER RECYCLING FACILITY PROJECT

INSTRUMENTATION

UV DISINFECTION CHANNEL NO. 3

VERIFY SCALES
BAR IS ONE INCH ON ORIGINAL DRAWING
0 1"
IF NOT ONE INCH ON THIS SHEET, ADJUST SCALES ACCORDINGLY

JOB NO. 8930A.11
DRAWING NO. 31N03
SHEET NO. 435 OF 549

LAST SAVED BY: broepken

PROJECT NO. 8930A.11 FILE NAME: 8930A1131N003.dwg

GENERAL NOTES

1. ALL EQUIPMENT AND INSTRUMENT TAGGING ON THIS SHEET SHALL BE PRECEDED WITH FACILITY INDEX NO. 32 WHICH IS NOT SHOWN FOR CLARITY.

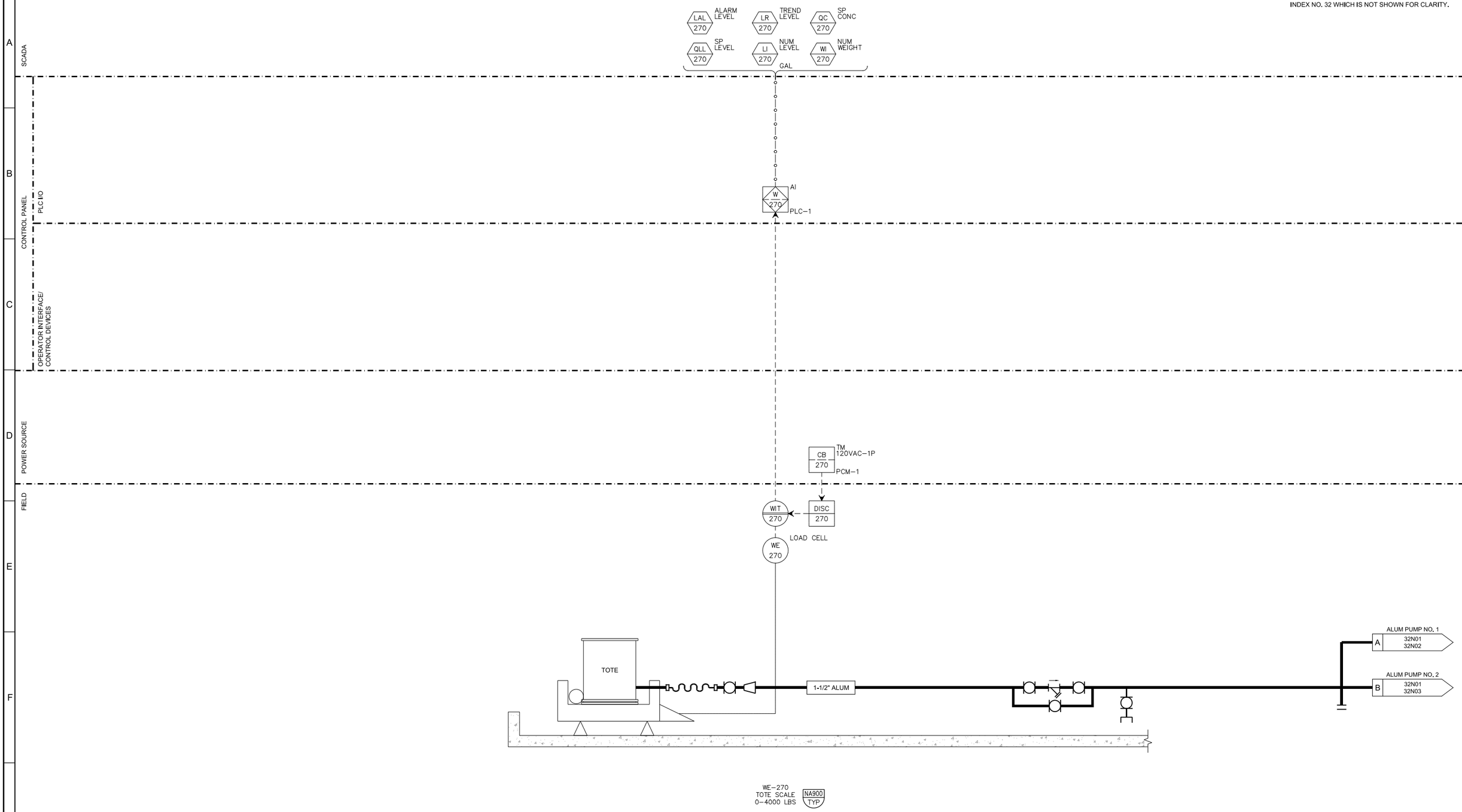

REV	DATE	BY	DESCRIPTION

DESIGNED PCK
DRAWN CGR
CHECKED RAM
DATE SEPT 2013

REGISTERED PROFESSIONAL ENGINEER CARLO A. GROSSO No. 16851 ELECTRICAL STATE OF CALIFORNIA 9/16/2013

carollo

SAN LUIS OBISPO COUNTY

SAN LUIS OBISPO COUNTY

LOS OSOS WATER RECYCLING FACILITY PROJECT

INSTRUMENTATION

ALUMINUM SULFATE STORAGE

VERIFY SCALES
BAR IS ONE INCH ON ORIGINAL DRAWING
0 1"
IF NOT ONE INCH ON THIS SHEET, ADJUST SCALES ACCORDINGLY

JOB NO. 8930A.11
DRAWING NO. 32N01
SHEET NO. 436 OF 549

LAST SAVED BY: broepken

PROJECT NO. 8930A.11 FILE NAME: 8930A1132N001.dwg

SCADA

HAJ 271 SEL LEAD/STANDBY (FOR PMP-271 & PMP-272)

SIB 271 NUM SPEED
HAT 271 ACTION SS
HAD 271 ACTION HOA
KI 271 NUM ETM
Y1 271 STATUS RUNNING
Y2 271 ALARM FAILED
QB 271 SP SG
HAS 271 ACTION SPEED-HAND
QC 271 SP CONC Mg/L
QD 271 SP DOSE Mg/L
YR 271 STATUS REMOTE
LAH 271 ALARM LEAK

CONTROL PANEL

PLC I/O

AUX2 271 DI FAILED PLC-1
FC 271 AO SPEED OUT PLC-1
AUX1 271 DI RUNNING PLC-1
SB 271 AI SPEED PLC-1
XST 271 DO START/STOP PLC-1
HSAR 271 DI REMOTE PLC-1
LSH 271 DI LEAK PLC-1

OPERATOR INTERFACE/ CONTROL DEVICES

POWER SOURCE

CB 271 TM 120VAC-1P LP-BC

FIELD

DISC 271

VCP 271
PMP 271

LSH 271 FBPS

ALUM PUMP NO. 2
C 32N03 32N02 1/2" ALUM

PI 271

ALUM TOTE
A 32N01 32N02 1-1/2" ALUM

1/2" ALUM B 32N02 28N03 FLASH MIX

PMP-271
ALUM PUMP NO.1

PI-271
PRESSURE INDICATOR 0-60 PSIG NP502 TYP

GENERAL NOTES

1. ALL EQUIPMENT AND INSTRUMENT TAGGING ON THIS SHEET SHALL BE PRECEDED WITH FACILITY INDEX NO. 32, WHICH IS NOT SHOWN FOR CLARITY.

REV	DATE	BY	DESCRIPTION

DESIGNED PCK
DRAWN BJT
CHECKED RAM
DATE SEPT 2013

REGISTERED PROFESSIONAL ENGINEER CARLO A. GROSSO No. 16851 ELECTRICAL STATE OF CALIFORNIA 9/16/2013

carollo

SAN LUIS OBISPO COUNTY

SAN LUIS OBISPO COUNTY

LOS OSOS WATER RECYCLING FACILITY PROJECT

INSTRUMENTATION

ALUMINUM SULFATE FEED - 1

VERIFY SCALES
BAR IS ONE INCH ON ORIGINAL DRAWING
0 1"
IF NOT ONE INCH ON THIS SHEET, ADJUST SCALES ACCORDINGLY

JOB NO. 8930A.11
DRAWING NO. 32N02
SHEET NO. 437 OF 549

LAST SAVED BY: broepken

PROJECT NO. 8930A.11 FILE NAME: 8930A1132N002.dwg

SCADA

SIB <...> NUM SPEED
HAT 272 ACTION SS
HAD 272 ACTION HOA
KI 272 NUM ETM
Y1 272 STATUS RUNNING
Y2 272 ALARM FAILED
QB <...> SP SG
HAS 272 ACTION SPEED–HAND
QC 272 SP CONC Mg/L
QD 272 SP DOSE Mg/L
YR 272 STATUS REMOTE
LAH 272 ALARM LEAK

CONTROL PANEL

PLC I/O

AUX2 272 DI FAILED PLC–1
FC 272 AO SPEED OUT PLC–1
AUX1 272 DI RUNNING PLC–1
SB 272 AI SPEED PLC–1
XST 272 DO START/STOP PLC–1
HSAR 272 DI REMOTE PLC–1
LSH 272 DI LEAK PLC–1

OPERATOR INTERFACE/
CONTROL DEVICES

POWER SOURCE

CB 272 TM 120VAC–1P LP–BC
DISC 272

FIELD

VCP 272
PMP 272
LSH 272 FBPS
PI 272

ALUM TOTE B 32N01 32N03
1-1/2" ALUM
1/2" ALUM C 32N03 32N02 ALUM PUMPS DISCHARGE HEADER

LAH 273 ALARM
LSH 273 DI PLC–1
LSH 273
LE 273 DISPLACEMENT

NC
3" CHD A 32N03 32N04 PLANT DRAIN PS

PMP–272
ALUM PUMP NO.2

PI–272
PRESSURE INDICATOR
0–60 PSIG
NP502 TYP

LE–273
LEVEL SWITCH HIGH
1 FT
NL106 TYP

GENERAL NOTES

1. ALL EQUIPMENT AND INSTRUMENT TAGGING ON THIS SHEET SHALL BE PRECEDED WITH FACILITY INDEX NO. 32 WHICH IS NOT SHOWN FOR CLARITY.

REV	DATE	BY	DESCRIPTION

DESIGNED PCK
DRAWN BJT
CHECKED RAM
DATE SEPT 2013

REGISTERED PROFESSIONAL ENGINEER CARLO A. GROSSO No. 16851 ELECTRICAL STATE OF CALIFORNIA 9/16/2013

carollo

SAN LUIS OBISPO COUNTY

SAN LUIS OBISPO COUNTY
LOS OSOS WATER RECYCLING FACILITY PROJECT
INSTRUMENTATION
ALUMINUM SULFATE FEED - 2

VERIFY SCALES
BAR IS ONE INCH ON ORIGINAL DRAWING
0 1"
IF NOT ONE INCH ON THIS SHEET, ADJUST SCALES ACCORDINGLY

JOB NO. 8930A.11
DRAWING NO. 32N03
SHEET NO. 438 OF 549

LAST SAVED BY: broepken

PROJECT NO. 8930A.11 FILE NAME: 8930A1132N003.dwg

GENERAL NOTES

1. ALL EQUIPMENT AND INSTRUMENT TAGGING ON THIS SHEET SHALL BE PRECEDED WITH FACILITY INDEX NO. 32 WHICH IS NOT SHOWN FOR CLARITY.

SCADA

LALL 280 ALARM | LAL 280 ALARM | LAH 280 ALARM | LAHH 280 ALARM | LR 280 TREND
QLLL 280 SP | QLL 280 SP | QLH 280 SP | QLHH 280 SP | LI 280 NUM

LAH 280 ALARM

PLC I/O

LSH 280 DI — PLC–1

L 280 AI — PLC–1

CONTROL PANEL

OPERATOR INTERFACE/ CONTROL DEVICES

POWER SOURCE

CB 280 — TM 120VAC–1P — PCM–1

FIELD

LSH 280 — LE 280 DISPLACEMENT

LIT 280 — DISC 280 — LE 280 ULTRASONIC

VENT

2" SHS

OVERFLOW

2" SHS

SHS STORAGE TANK 2,900 GAL

TNK 280

LI 280B FBTS

LI 280A FBTS

2" SHS

SH PUMP NO. 1 — A — 32N04 32N05

SH PUMP NO. 2 — B — 32N04 32N06

SH PUMP NO. 3 — C — 32N04 32N07

SH PUMP NO. 4 — D — 32N04 32N08

SH PUMP NO. 5 — E — 32N04 32N09

PLANT DRAIN PS — 32N04 04N01 — D — 4" CHD

ALUM CONTAINMENT — A — 32N03 32N04 — 3" CHD

NC

LE–280 LEVEL SWITCH HIGH 1 FT — NL102 TYP

LE–280 ULTRASONIC LEVEL 0–12 FT — NL170 TYP — NA900 TYP

REV	DATE	BY	DESCRIPTION

DESIGNED PCK
DRAWN BJT
CHECKED RAM
DATE SEPT 2013

REGISTERED PROFESSIONAL ENGINEER — CARLO A. GROSSO — No. 18851 — ELECTRICAL — STATE OF CALIFORNIA
9/16/2013

carollo

COUNTY OF SAN LUIS OBISPO — FOUNDED 1850 — CENTRAL COAST CALIFORNIA

SAN LUIS OBISPO COUNTY

SAN LUIS OBISPO COUNTY

LOS OSOS WATER RECYCLING FACILITY PROJECT

INSTRUMENTATION

SODIUM HYPOCHLORITE STORAGE

VERIFY SCALES
BAR IS ONE INCH ON ORIGINAL DRAWING
0 — 1"
IF NOT ONE INCH ON THIS SHEET, ADJUST SCALES ACCORDINGLY

JOB NO. 8930A.11
DRAWING NO. 32N04
SHEET NO. 439 OF 549

LAST SAVED BY: broepken

PROJECT NO. 8930A.11 FILE NAME: 8930A1132N004.dwg

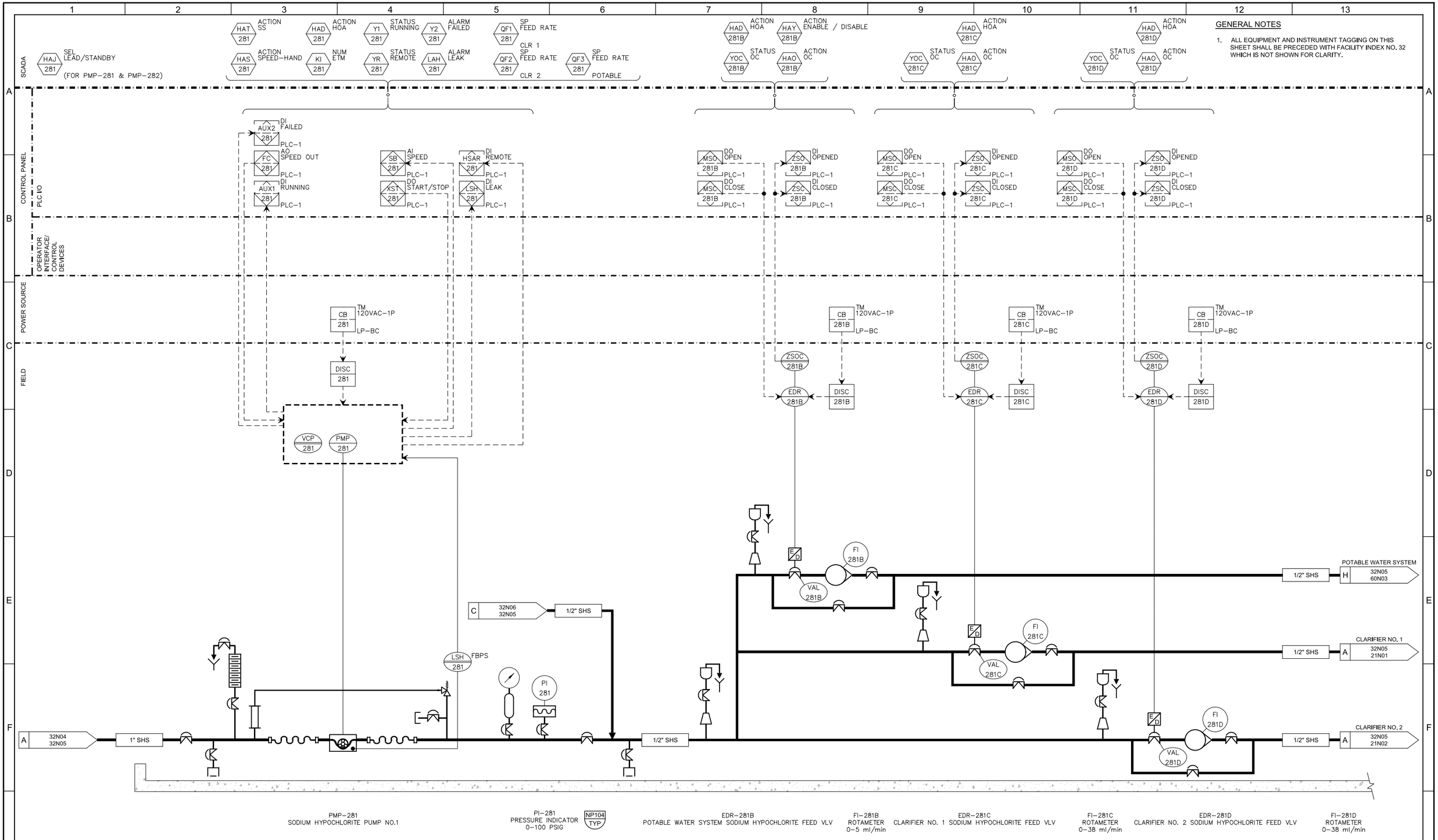

GENERAL NOTES

1. ALL EQUIPMENT AND INSTRUMENT TAGGING ON THIS SHEET SHALL BE PRECEDED WITH FACILITY INDEX NO. 32 WHICH IS NOT SHOWN FOR CLARITY.

REV	DATE	BY	DESCRIPTION

DESIGNED PCK
DRAWN BJT
CHECKED RAM
DATE SEPT 2013

REGISTERED PROFESSIONAL ENGINEER CARLO A. GROSS No. 18851 ELECTRICAL STATE OF CALIFORNIA 9/16/2013

carollo

SAN LUIS OBISPO COUNTY

SAN LUIS OBISPO COUNTY
LOS OSOS WATER RECYCLING FACILITY PROJECT
INSTRUMENTATION
SODIUM HYPOCHLORITE FEED - 1

VERIFY SCALES
BAR IS ONE INCH ON ORIGINAL DRAWING
0 1"
IF NOT ONE INCH ON THIS SHEET, ADJUST SCALES ACCORDINGLY

JOB NO. 8930A.11
DRAWING NO. 32N05
SHEET NO. 440 OF 549

LAST SAVED BY: broepken

PROJECT NO. 8930A.11 FILE NAME: 8930A1132N005.dwg

SCADA

HAT 282 ACTION SS
HAD 282 ACTION HOA
Y1 282 STATUS RUNNING
Y2 282 ALARM FAILED
QF1 282 SP FEED RATE
HAS 282 ACTION SPEED–HAND
KI 282 NUM ETM
YR 282 STATUS REMOTE
LAH 282 ALARM LEAK
QF2 282 CLR 1 SP FEED RATE
QF3 282 CLR 2 SP FEED RATE POTABLE

GENERAL NOTES

1. ALL EQUIPMENT AND INSTRUMENT TAGGING ON THIS SHEET SHALL BE PRECEDED WITH FACILITY INDEX NO. 32 WHICH IS NOT SHOWN FOR CLARITY.

CONTROL PANEL

PLC I/O

AUX2 282 DI FAILED PLC–1
FC 282 AO SPEED OUT PLC–1
AUX1 282 DI RUNNING PLC–1
SB 282 AI SPEED PLC–1
XST 282 DO START/STOP PLC–1
HSAR 282 DI REMOTE PLC–1
LSH 282 DI LEAK PLC–1

OPERATOR INTERFACE/ CONTROL DEVICES

POWER SOURCE

CB 282 TM 120VAC–1P LP–BC
DISC 282

FIELD

VCP 282
PMP 282
LSH 282 FBPS
PI 282

SH TANK B 32N04 32N06
1" SHS
1/2" SHS
SH PUMP 1&2 DISCHARGE HEADER C 32N06 32N05

PMP–282
SODIUM HYPOCHLORITE PUMP NO.2

PI–282
PRESSURE INDICATOR 0–100 PSIG
NP104 TYP

REV	DATE	BY	DESCRIPTION

DESIGNED PCK
DRAWN BJT
CHECKED RAM
DATE SEPT 2013

REGISTERED PROFESSIONAL ENGINEER CARLO A. GROSSO No. 16851 ELECTRICAL STATE OF CALIFORNIA 9/16/2013

carollo

SAN LUIS OBISPO COUNTY

SAN LUIS OBISPO COUNTY
LOS OSOS WATER RECYCLING FACILITY PROJECT
INSTRUMENTATION
SODIUM HYPOCHLORITE FEED - 2

VERIFY SCALES
BAR IS ONE INCH ON ORIGINAL DRAWING
0 1"
IF NOT ONE INCH ON THIS SHEET, ADJUST SCALES ACCORDINGLY

JOB NO. 8930A.11
DRAWING NO. 32N06
SHEET NO. 441 OF 549

LAST SAVED BY: broepken

PROJECT NO. 8930A.11 FILE NAME: 8930A1132N006.dwg

SCADA

HAJ 283 SEL LEAD/STANDBY (FOR PUMPS PMP-283 & PMP-284)

HAT 283 ACTION SS
HAD 283 ACTION HOA
KI 283 NUM ETM
Y1 283 STATUS RUNNING
QB 283 SP SG
HAS 283 ACTION SPEED-HAND
QC 283 SP CONC Mg/L
QD 283 SP DOSE Mg/L
YR 283 STATUS REMOTE
LAH 283 ALARM LEAK

CONTROL PANEL

PLC I/O

SB 283 AI SPEED PLC-1
XST 283 DO START/STOP PLC-1
HSAR 283 DI REMOTE PLC-1
LSH 283 DI LEAK PLC-1
FC 283 AO SPEED OUT PLC-1
AUX1 283 DI RUNNING PLC-1

OPERATOR INTERFACE/ CONTROL DEVICES

POWER SOURCE

CB 283 TM 120VAC-1P LP-BC
DISC 283

FIELD

VCP 283
PMP 283
PSV 283
LSH 283 FBPS
PI 283
A

SH TANK C 32N04 32N07
1" SHS
SH PUMP NO. 4 E 32N08 32N07
1/2" SHS
1/2" SHS
EFFLUENT PUMP STATION A 32N07 40N03

PMP-283
SODIUM HYPOCHLORITE PUMP NO.3

PI-283
PRESSURE INDICATOR 0-160 PSIG
NP104 TYP

GENERAL NOTES

1. ALL EQUIPMENT AND INSTRUMENT TAGGING ON THIS SHEET SHALL BE PRECEDED WITH FACILITY INDEX NO. 32, WHICH IS NOT SHOWN FOR CLARITY.

REV	DATE	BY	DESCRIPTION

DESIGNED PCK
DRAWN BJT
CHECKED RAM
DATE SEPT 2013

REGISTERED PROFESSIONAL ENGINEER CARLO A. GRING No. 18851 ELECTRICAL STATE OF CALIFORNIA 9/16/2013

carollo

SAN LUIS OBISPO COUNTY

SAN LUIS OBISPO COUNTY
LOS OSOS WATER RECYCLING FACILITY PROJECT
INSTRUMENTATION
SODIUM HYPOCHLORITE FEED - 3

VERIFY SCALES
BAR IS ONE INCH ON ORIGINAL DRAWING
0 1"
IF NOT ONE INCH ON THIS SHEET, ADJUST SCALES ACCORDINGLY

JOB NO. 8930A.11
DRAWING NO. 32N07
SHEET NO. 442 OF 549

LAST SAVED BY: broepken

PROJECT NO. 8930A.11 FILE NAME: 8930A1132N007.dwg

SCADA

HAT 284 ACTION SS
HAD 284 ACTION HOA
KI 284 NUM ETM
Y1 284 STATUS RUNNING
QB 284 SP SG
HAS 284 ACTION SPEED–HAND
QC 284 SP CONC Mg/L
QD 284 SP DOSE Mg/L
YR 284 STATUS REMOTE
LAH 284 ALARM LEAK

GENERAL NOTES

1. ALL EQUIPMENT AND INSTRUMENT TAGGING ON THIS SHEET SHALL BE PRECEDED WITH FACILITY INDEX NO. 32, WHICH IS NOT SHOWN FOR CLARITY.

CONTROL PANEL

PLC I/O

SB 284 AI SPEED PLC–1
XST 284 DO START/STOP PLC–1
HSAR 284 DI REMOTE PLC–1
LSH 284 DI LEAK PLC–1
FC 284 AO SPEED OUT PLC–1
AUX1 284 DI RUNNING PLC–1

OPERATOR INTERFACE/ CONTROL DEVICES

POWER SOURCE

CB 284 TM 120VAC–1P LP–BC
DISC 284
VCP 284
PMP 284

FIELD

PSV 284
LSH 284 FBPS
PI 284

D SH TANK 32N04 32N08 — 1" SHS

1/2" SHS E EFF PUMP STATION 32N08 32N07
1/2" SHS F SH PUMP 4&5 DISCHARGE HEADER 32N08 32N09
NC

PMP–284 SODIUM HYPOCHLORITE PUMP NO.4

PI–284 PRESSURE INDICATOR 0–160 PSIG NP104 TYP

REV	DATE	BY	DESCRIPTION

DESIGNED PCK
DRAWN BJT
CHECKED RAM
DATE SEPT 2013

REGISTERED PROFESSIONAL ENGINEER CARLO A. GRING No. 15851 ELECTRICAL STATE OF CALIFORNIA 9/16/2013

carollo

SAN LUIS OBISPO COUNTY

SAN LUIS OBISPO COUNTY
LOS OSOS WATER RECYCLING FACILITY PROJECT
INSTRUMENTATION
SODIUM HYPOCHLORITE FEED - 4

VERIFY SCALES
BAR IS ONE INCH ON ORIGINAL DRAWING
0 1"
IF NOT ONE INCH ON THIS SHEET, ADJUST SCALES ACCORDINGLY

JOB NO. 8930A.11
DRAWING NO. 32N08
SHEET NO. 443 OF 549

LAST SAVED BY: broepken

PROJECT NO. 8930A.11 FILE NAME: 8930A1132N008.dwg

SCADA

HAT 285 ACTION SS
HAD 285 ACTION HOA
KI 285 NUM ETM
Y1 285 STATUS RUNNING
QB 285 SP SG
HAS 285 ACTION SPEED–HAND
QC 285 SP CONC Mg/L
QD 285 SP DOSE Mg/L
YR 285 STATUS REMOTE
LAH 285 ALARM LEAK

CONTROL PANEL

PLC I/O

FC 285 AO SPEED OUT PLC–1
SB 285 AI SPEED PLC–1
HSAR 285 DI REMOTE PLC–1
AUX1 285 DI RUNNING PLC–1
XST 285 DO START/STOP PLC–1
LSH 285 DI LEAK PLC–1

OPERATOR INTERFACE/ CONTROL DEVICES

POWER SOURCE

CB 285 TM 120VAC–1P LP–BD

FIELD

DISC 285

VCP 285
PMP 285

PSV 285

SH PUMP NO. 4
F 32N08 32N09
1/2" SHS

LSH 285 FBPS

PI 285

SH TANK
E 32N04 32N09
1" SHS

1/2" SHS

REW POND
1/2" SHS A 32N09 03N01

UV FACILITY
1/2" SHS A 32N09 31N01

OXIDATION DITCH
1/2" SHS A 32N09 20N03

SCUM PUMP STATION
1/2" SHS A 32N09 23N01

PMP–285
SODIUM HYPOCHLORITE PUMP NO.5

PI–285
PRESSURE INDICATOR
0–160 PSIG
NP104 TYP

GENERAL NOTES

1. ALL EQUIPMENT AND INSTRUMENT TAGGING ON THIS SHEET SHALL BE PRECEDED WITH FACILITY INDEX NO. 32, WHICH IS NOT SHOWN FOR CLARITY.

REV	DATE	BY	DESCRIPTION

DESIGNED PCK
DRAWN BJT
CHECKED RAM
DATE SEPT 2013

REGISTERED PROFESSIONAL ENGINEER CARLO A. GROSSI No. 16851 ELECTRICAL STATE OF CALIFORNIA 9/16/2013

carollo

SAN LUIS OBISPO COUNTY

SAN LUIS OBISPO COUNTY
LOS OSOS WATER RECYCLING FACILITY PROJECT
INSTRUMENTATION
SODIUM HYPOCHLORITE FEED - 5

VERIFY SCALES
BAR IS ONE INCH ON ORIGINAL DRAWING
0 1"
IF NOT ONE INCH ON THIS SHEET, ADJUST SCALES ACCORDINGLY

JOB NO. 8930A.11
DRAWING NO. 32N09
SHEET NO. 444 OF 549

LAST SAVED BY: broepken

PROJECT NO. 8930A.11 FILE NAME: 8930A1132N009.dwg

GENERAL NOTES

1. ALL EQUIPMENT AND INSTRUMENT TAGGING ON THIS SHEET SHALL BE PRECEDED WITH FACILITY INDEX NO. 32 WHICH IS NOT SHOWN FOR CLARITY.

SCADA

CONTROL PANEL

PLC I/O

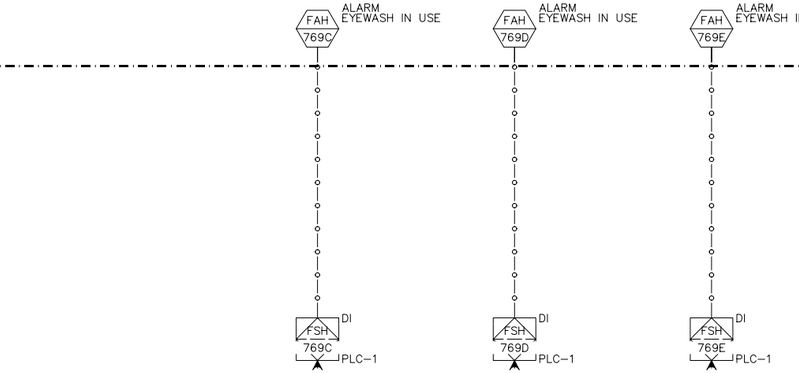

OPERATOR INTERFACE/ CONTROL DEVICES

POWER SOURCE

FIELD

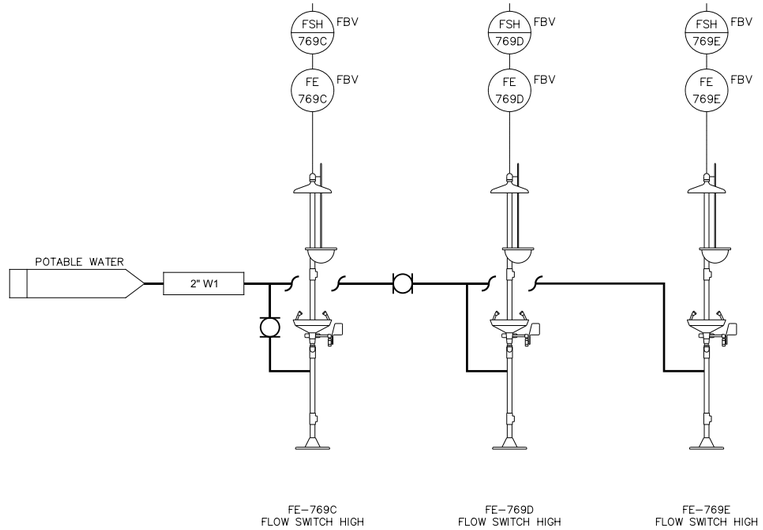

REV	DATE	BY	DESCRIPTION

DESIGNED PCK
DRAWN BJT
CHECKED RAM
DATE SEPT 2013

REGISTERED PROFESSIONAL ENGINEER CARLO A. GROSSO No. 18851 ELECTRICAL STATE OF CALIFORNIA
9/16/2013

carollo

SAN LUIS OBISPO COUNTY

SAN LUIS OBISPO COUNTY
LOS OSOS WATER RECYCLING FACILITY PROJECT
INSTRUMENTATION
CHEMICAL FACILITY ANCILLARY SYSTEM

VERIFY SCALES
BAR IS ONE INCH ON ORIGINAL DRAWING
0 1"
IF NOT ONE INCH ON THIS SHEET, ADJUST SCALES ACCORDINGLY

JOB NO. 8930A.11
DRAWING NO. 32N10
SHEET NO. 445 OF 549

LAST SAVED BY: broepken

PROJECT NO. 8930A.11 FILE NAME: 8930A1132N010.dwg

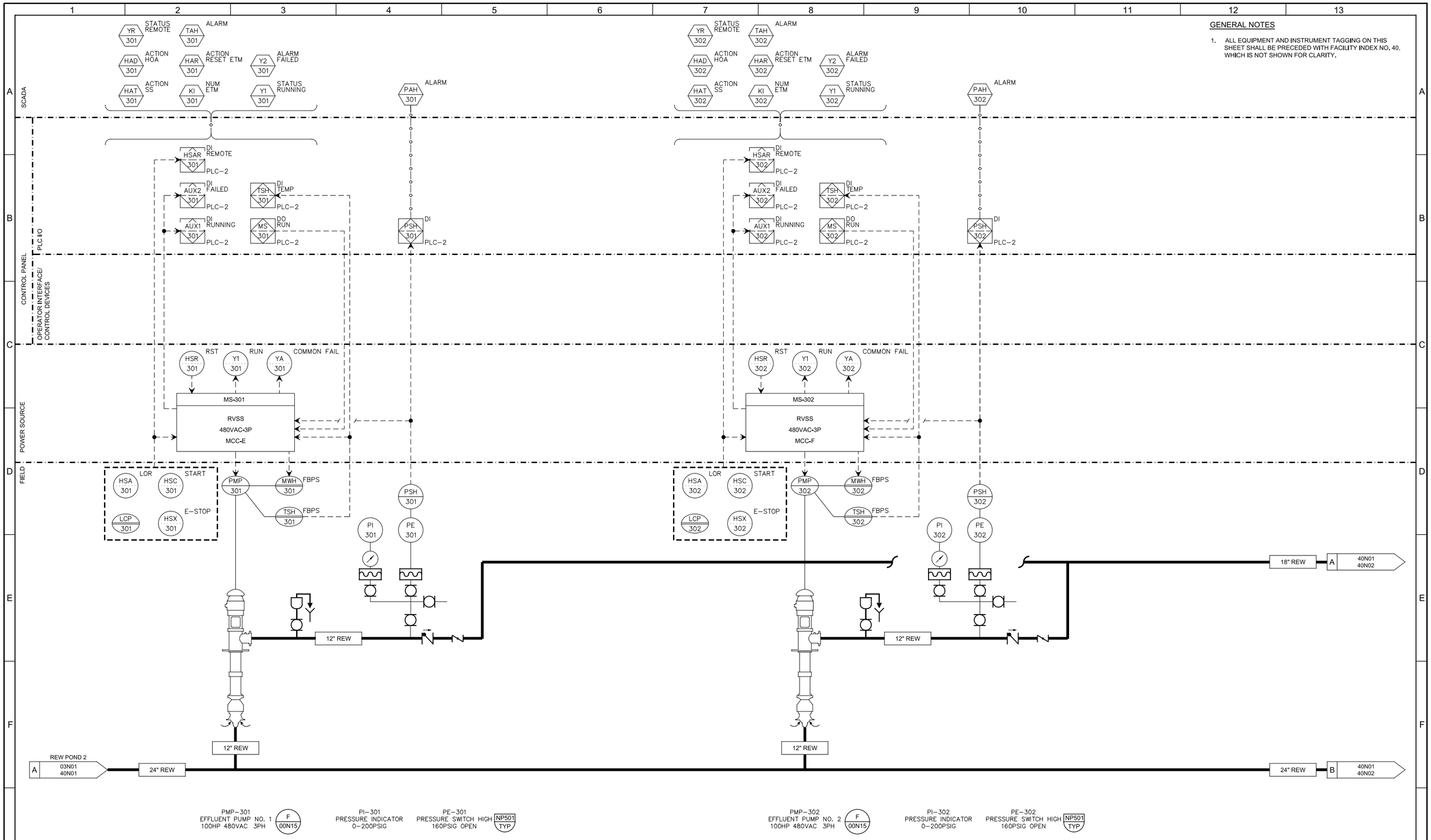

GENERAL NOTES

1. ALL EQUIPMENT AND INSTRUMENT TAGGING ON THIS SHEET SHALL BE PRECEDED WITH FACILITY INDEX NO. 40, WHICH IS NOT SHOWN FOR CLARITY.

REV	DATE	BY	DESCRIPTION

DESIGNED PCK
DRAWN CGR
CHECKED RAM
DATE SEPT 2013

REGISTERED PROFESSIONAL ENGINEER CARLO A. GROSS No. 18851 ELECTRICAL STATE OF CALIFORNIA 9/16/2013

carollo

SAN LUIS OBISPO COUNTY

SAN LUIS OBISPO COUNTY
LOS OSOS WATER RECYCLING FACILITY PROJECT
INSTRUMENTATION
EFFLUENT PUMP STATION - 1

VERIFY SCALES
BAR IS ONE INCH ON ORIGINAL DRAWING
0 1"
IF NOT ONE INCH ON THIS SHEET, ADJUST SCALES ACCORDINGLY

JOB NO. 8930A.11
DRAWING NO. 40N01
SHEET NO. 446 OF 549

LAST SAVED BY: broepken

PROJECT NO. 8930A.11 FILE NAME: 8930A1140N001.dwg

GENERAL NOTES

1. ALL EQUIPMENT AND INSTRUMENT TAGGING ON THIS SHEET SHALL BE PRECEDED WITH FACILITY INDEX NO. 40, WHICH IS NOT SHOWN FOR CLARITY.

SCADA

YR 303 STATUS REMOTE
TAH 303 ALARM
HAD 303 ACTION HOA
HAR 303 ACTION RESET ETM
Y2 303 ALARM FAILED
HAT 303 ACTION SS
KI 303 NUM ETM
Y1 303 STATUS RUNNING
PAH 303 ALARM

YR 304 STATUS REMOTE
TAH 304 ALARM
HAD 304 ACTION HOA
HAR 304 ACTION RESET ETM
Y2 304 ALARM FAILED
HAT 304 ACTION SS
KI 304 NUM ETM
Y1 304 STATUS RUNNING
PAH 304 ALARM

CONTROL PANEL

PLC I/O

HSAR 303 DI REMOTE PLC-2
AUX2 303 DI FAILED PLC-2
TSH 303 DI TEMP PLC-2
AUX1 303 DI RUNNING PLC-2
MS 303 DO RUN PLC-2
PSH 303 DI PLC-2

HSAR 304 DI REMOTE PLC-2
AUX2 304 DI FAILED PLC-2
TSH 304 DI TEMP PLC-2
AUX1 304 DI RUNNING PLC-2
MS 304 DO RUN PLC-2
PSH 304 DI PLC-2

OPERATOR INTERFACE/ CONTROL DEVICES

HSR 303 RST
Y1 303 RUN
YA 303 COMMON FAIL

HSR 304 RST
Y1 304 RUN
YA 304 COMMON FAIL

POWER SOURCE

MS-303
RVSS
480VAC-3P
MCC-E

MS-304
RVSS
480VAC-3P
MCC-F

FIELD

HSA 303 LOR
HSC 303 START
LCP 303
HSX 303 E-STOP
PMP 303
MWH 303
TSH 303
PSH 303
PI 303
PE 303

HSA 304 LOR
HSC 304 START
LCP 304
HSX 304 E-STOP
PMP 304
MWH 304
TSH 304
PSH 304
PI 304
PE 304

A 40N01 40N02 — 18" REW

12" REW

B 40N01 40N02 — 24" REW

12" REW

REW POND 1 03N01 40N02 A

18" REW — A 40N02 40N03

PMP-303 EFFLUENT PUMP NO. 3 100HP 480VAC 3PH (F 00N15)
PI-303 PRESSURE INDICATOR 0-200PSIG
PE-303 PRESSURE SWITCH HIGH 160PSIG OPEN (NP501 TYP)

PMP-304 EFFLUENT PUMP NO. 4 100HP 480VAC 3PH (F 00N15)
PI-304 PRESSURE INDICATOR 0-200PSIG
PE-304 PRESSURE SWITCH HIGH 160PSIG OPEN (NP501 TYP)

REV	DATE	BY	DESCRIPTION

DESIGNED PCK
DRAWN CGR
CHECKED RAM
DATE SEPT 2013

REGISTERED PROFESSIONAL ENGINEER — CARLO A. GRECO — No. 16851 — ELECTRICAL — STATE OF CALIFORNIA — 9/16/2013

carollo

SAN LUIS OBISPO COUNTY

SAN LUIS OBISPO COUNTY
LOS OSOS WATER RECYCLING FACILITY PROJECT
INSTRUMENTATION
EFFLUENT PUMP STATION - 2

VERIFY SCALES
BAR IS ONE INCH ON ORIGINAL DRAWING
0 1"
IF NOT ONE INCH ON THIS SHEET, ADJUST SCALES ACCORDINGLY

JOB NO. 8930A.11
DRAWING NO. 40N02
SHEET NO. 447 OF 549

LAST SAVED BY: broepken

PROJECT NO. 8930A.11 FILE NAME: 8930A1140N002.dwg

SCADA

PAH 306 ALARM | PR 306 TREND | PAL 306 ALARM | QP1 306 SP LEAD | QP3 306 SP LAG–2 | QP5 306 SP LEAD | QP7 306 SP LAG–2 | QK1 306 SP PUMP START | PROVING TIMER

QPH 306 SP | PI 306 NUM | QPL 306 SP | QP2 306 SP LAG–1 | QP4 306 SP LAG–3 | QP6 306 SP LAG–1 | QP8 306 SP LAG–3 | QK2 306 SP PUMP STOP | PROVING TIMER

FAH 307 ALARM | FR 307 TREND | QFH 307 SP

FAL 307 ALARM | FI 307 NUM | QFL 307 SP

AAL 308 ALARM CL2 | AAH 308 ALARM CL2 | AR 308 TREND CL2

QAL 308 SP CL2 | QAH 308 SP CL2 | AI 308 NUM CL2

GENERAL NOTES

1. ALL EQUIPMENT AND INSTRUMENT TAGGING ON THIS SHEET SHALL BE PRECEDED WITH FACILITY INDEX NO. 40, WHICH IS NOT SHOWN FOR CLARITY.

CONTROL PANEL

PLC I/O

P 306 AI — PLC–2

F 307 AI — PLC–2

A 308 AI CL2 — PLC–2

OPERATOR INTERFACE/ CONTROL DEVICES

POWER SOURCE

CB 307 TM 120VAC–1P — PCM–2

CB 308 TM 120VAC–1P — PCM–2

FIELD

PIT 306

PE 306

PI 306

FIT 307

DISC 307

FE 307

DISC 308

AIT 308 CL2

AE 308 CL2

PI 310 | PI 311 | PI 312 | PI 313 | PI 314

C 40N02 40N03

18" REW

10" REW

MM

INFLUENT SPLITTER BOX — A 40N03 20N02

EFFLUENT DISTRIBUTION

PI 305 FBHPTS

NITROGEN FILL

HYDRO PNEUMATIC TANK

TNK 305

PI 315

SODIUM HYPO FEED — A 32N07 40N03 — 1/2" SHS

PLANT WATER — 6" PW — A 40N03 50N12

1" REW

1" REW

ODOR CONTROL FACILITY — A 40N03 11N02

PE–306 PRESSURE INDICATOR 0–200PSIG

PE–306 PRESSURE TRANSMITTER 0–200PSIG NP189 TYP

PI–315 PRESSURE INDICATOR 0–60 PSIG NP104 TYP

PI–305 PRESSURE INDICATOR 0–200PSIG

FE–307 FLOW METER 0–3000 GPM 10" NA900 TYP NF130 TYP NF135 TYP NF137 TYP

PI–310 PRESSURE INDICATOR 0–200PSIG NP104 TYP

PI–311 PRESSURE INDICATOR 0–200PSIG NP104 TYP

PI–312 PRESSURE INDICATOR 0–200PSIG NP104 TYP

PI–313 PRESSURE INDICATOR 0–100PSIG NP104 TYP

PI–314 PRESSURE INDICATOR 0–60PSIG NP104 TYP

AE–308 CL2 0–30 mg/L NA042 TYP NA090 TYP NA900 TYP

REV	DATE	BY	DESCRIPTION

DESIGNED PCK
DRAWN CGR
CHECKED RAM
DATE SEPT 2013

REGISTERED PROFESSIONAL ENGINEER CARLO A. GRECO No. 16851 ELECTRICAL STATE OF CALIFORNIA 9/16/2013

carollo

SAN LUIS OBISPO COUNTY

SAN LUIS OBISPO COUNTY

LOS OSOS WATER RECYCLING FACILITY PROJECT

INSTRUMENTATION

EFFLUENT PUMP STATION - 3

VERIFY SCALES
BAR IS ONE INCH ON ORIGINAL DRAWING
0 1"
IF NOT ONE INCH ON THIS SHEET, ADJUST SCALES ACCORDINGLY

JOB NO. 8930A.11
DRAWING NO. 40N03
SHEET NO. 448 OF 549

LAST SAVED BY: broepken

PROJECT NO. 8930A.11 FILE NAME: 8930A1140N003.dwg

SCADA

CONTROL PANEL

PLC I/O

OPERATOR INTERFACE/ CONTROL DEVICES

POWER SOURCE

FIELD

FAH 124 ALARM
FR 124 TREND
QFH 124 SP
FAL 124 ALARM
FI 124 NUM
QFL 124 SP
FQI 124 NUM
YOC 124 STATUS OC
YR 124 STATUS REMOTE
ZI 124 NUM POSITION
HAD 124 ACTION HOA
HAK 124 ACTION MODULATE

FAH 125 ALARM
FR 125 TREND
QFH 125 SP
FAL 125 ALARM
FI 125 NUM
QFL 125 SP
FQI 125 NUM
YOC 125 STATUS OC
YR 125 STATUS REMOTE
ZI 125 NUM POSITION
HAD 125 ACTION HOA
HAK 125 ACTION MODULATE

F 124 AI PLC-2
MSC 124 DO CLOSE PLC-2
HSAR 124 DI REMOTE PLC-2
ZSO 124 DI OPENED PLC-2
ZSC 124 DI CLOSED PLC-2
Z2 124 AO POSITION PLC-2
Z1 124 AI POSITION PLC-2

F 125 AI PLC-2
MSC 125 DO CLOSE PLC-2
HSAR 125 DI REMOTE PLC-2
ZSO 125 DI OPENED PLC-2
ZSC 125 DI CLOSED PLC-2
Z2 125 AO POSITION PLC-2
Z1 125 AI POSITION PLC-2

CB 124 TM 120VAC-1P PCM-2
CB 124 TM 480VAC-3P MCC-E
CB 125 TM 120VAC-1P PCM-2
CB 125 TM 480VAC-3P MCC-F

FIT 124
DISC 124
FE 124
ZSOC 124
ZT 124
HSG 124 OSC
HSA 124 LOR
EAM 124
DISC 124

FIT 125
DISC 125
FE 125
ZSOC 125
ZT 125
HSG 125 OSC
HSA 125 LOR
EAM 125
DISC 125

PI 121
PI 122
PI 123

SEC CLARIFIER NO. 1 B 21N01 50N01
SEC CLARIFIER NO. 2 B 21N02 50N01
MM
E/M VAL 124
6" RAS
8" RAS
MM
6" RAS
E/M VAL 125
10"RAS
8"RAS
8"RAS
8"RAS
RAS PUMP NO. 1 A 50N01 50N02
RAS PUMP NO. 2 B 50N01 50N02
RAS PUMP NO. 3 A 50N01 50N02A

FE-124 FLOW METER 0-600 GPM 6" NA900 TYP NF130 TYP NF135 TYP NF137 TYP
EAM-124 RAS SUCTION VALVE NO. 1
FE-125 FLOW METER 0-600 GPM 6" NA900 TYP NF130 TYP NF135 TYP NF137 TYP
EAM-125 RAS SUCTION VALVE NO. 2
PI-121 PRESSURE GAUGE 0-30 PSIG NP900 TYP
PI-122 PRESSURE GAUGE 0-30 PSIG NP900 TYP
PI-123 PRESSURE GAUGE 0-30 PSIG NP900 TYP

GENERAL NOTES

1. ALL EQUIPMENT AND INSTRUMENT TAGGING ON THIS SHEET SHALL BE PRECEDED WITH FACILITY INDEX NO. 50, WHICH IS NOT SHOWN FOR CLARITY.

KEY NOTES

1. ASHCROFT TYPE 205 SADDLE DIAPHRAGM SEAL, NO EQUAL. PROVIDE FACTORY-CUT OPENINGS IN RAS PIPE FOR INSTALLATION OF DIAPHRAGM SEALS.

REV	DATE	BY	DESCRIPTION

DESIGNED CAG
DRAWN AD
CHECKED RAM
DATE SEPT 2013

REGISTERED PROFESSIONAL ENGINEER CARLO A. GROSS No. 16851 ELECTRICAL STATE OF CALIFORNIA 9/16/2013

carollo

SAN LUIS OBISPO COUNTY

SAN LUIS OBISPO COUNTY
LOS OSOS WATER RECYCLING FACILITY PROJECT
INSTRUMENTATION
RAS WAS PUMPS - 1

VERIFY SCALES
BAR IS ONE INCH ON ORIGINAL DRAWING
0 1"
IF NOT ONE INCH ON THIS SHEET, ADJUST SCALES ACCORDINGLY

JOB NO. 8930A.11
DRAWING NO. 50N01
SHEET NO. 449 OF 549

LAST SAVED BY: broepken

PROJECT NO. 8930A.11 FILE NAME: 8930A1150N001.dwg

SCADA

CONTROL PANEL

PLC I/O

OPERATOR INTERFACE/ CONTROL DEVICES

POWER SOURCE

FIELD

HAD 121 ACTION HOA
HAR 121 ACTION RESET ETM
Y2 121 ALARM FAILED
TAH 121 ALARM
QS 121 SP SPEED
HAT 121 ACTION SS
KI 121 NUM ETM
Y1 121 STATUS RUNNING
YR 121 STATUS REMOTE
SIB 121 NUM SPEED
FAL 121 ALARM SEAL WATER FAIL
PAH 121 ALARM

HAD 122 ACTION HOA
HAR 122 ACTION RESET ETM
Y2 122 ALARM FAILED
TAH 122 ALARM
QS 122 SP SPEED
HAT 122 ACTION SS
KI 122 NUM ETM
Y1 122 STATUS RUNNING
YR 122 STATUS REMOTE
SIB 122 NUM SPEED
FAL 122 ALARM SEAL WATER FAIL
PAH 122 ALARM

HSAR 121 DI REMOTE
MS 121 DO RUN
SB 121 AI SPEED IN
SS 121 AO SPEED OUT
TSH 121 DI
AUX1 121 DI RUNNING
AUX2 121 DI FAILED
FSL 121 DI SEAL WATER FAIL
PSH 121 DI

HSAR 122 DI REMOTE
MS 122 DO RUN
SB 122 AI SPEED IN
SS 122 AO SPEED OUT
TSH 122 DI
AUX1 122 DI RUNNING
AUX2 122 DI FAILED
FSL 122 DI SEAL WATER FAIL
PSH 122 DI

PLC-2

Y1 121 RUN
YA 121 COMMON FAIL
HSR 121 RST
VFD-121
VFD
480VAC-3P
MCC-E

Y1 122 RUN
YA 122 COMMON FAIL
HSR 122 RST
VFD-122
VFD
480VAC-3P
MCC-F

SV 121
FSL 121
FE 121
PI 121A
HSC 121 START
HSX 121 E-STOP
HSA 121 LOR
LCP 121
PMP 121
MWH 121
TSH 121
PI 121B
PSH 121
PE 121

SV 122
FSL 122
FE 122
PI 122A
HSC 122 START
HSX 122 E-STOP
HSA 122 LOR
LCP 122
PMP 122
MWH 122
TSH 122
PI 122B
PSH 122
PE 122

PLANT WATER
S
FI 121
FI 122
SEC CLARIFIERS A 50N01 50N02
SEC CLARIFIERS B 50N01 50N02
8"RAS
6"RAS
M
1
RAS PUMP DISCHARGE HEADER A 50N02 50N03
RAS PUMP DISCHARGE HEADER B 50N02 50N03

2 FI-121 ROTAMETER
FE-121 LOW FLOW SWITCH
PI-121A PRESSURE INDICATOR 0-30 PSIG NP105 TYP
PMP-121 RAS/WAS PUMP NO. 1 N 00N22
PI-121B PRESSURE INDICATOR 0-30 PSIG NP900 TYP
PSH-121 PRESSURE SWITCH HIGH 15 PSIG OPEN NP901 TYP
2 FI-122 ROTAMETER
FE-122 LOW FLOW SWITCH
PI-122A PRESSURE INDICATOR 0-30 PSIG NP105 TYP
PMP-122 RAS/WAS PUMP NO. 2 N 00N22
PI-122B PRESSURE INDICATOR 0-30 PSIG NP900 TYP
PSH-122 PRESSURE SWITCH HIGH 15 PSIG OPEN NP901 TYP

GENERAL NOTES

1. ALL EQUIPMENT AND INSTRUMENT TAGGING ON THIS SHEET SHALL BE PRECEDED WITH FACILITY INDEX NO. 50, WHICH IS NOT SHOWN FOR CLARITY.

KEY NOTES

1. ASHCROFT TYPE 205 SADDLE DIAPHRAGM SEAL, NO EQUAL. PROVIDE FACTORY-CUT OPENINGS IN RAS PIPE FOR INSTALLATION OF DIAPHRAGM SEALS.
2. COORDINATE ROTATMETER FLOW RANGE WITH PUMP SEAL MANUFACTURER.

REV	DATE	BY	DESCRIPTION

DESIGNED CAG
DRAWN AD
CHECKED RAM
DATE SEPT 2013

REGISTERED PROFESSIONAL ENGINEER CARLO A. GROSS No. 16851 ELECTRICAL STATE OF CALIFORNIA 9/16/2013

carollo

SAN LUIS OBISPO COUNTY

SAN LUIS OBISPO COUNTY
LOS OSOS WATER RECYCLING FACILITY PROJECT
INSTRUMENTATION
RAS WAS PUMPS - 2

VERIFY SCALES
BAR IS ONE INCH ON ORIGINAL DRAWING
0 1"
IF NOT ONE INCH ON THIS SHEET, ADJUST SCALES ACCORDINGLY

JOB NO. 8930A.11
DRAWING NO. 50N02
SHEET NO. 450 OF 549

LAST SAVED BY: broepken

PROJECT NO. 8930A.11 FILE NAME: 8930A1150N002.dwg

SCADA

CONTROL PANEL

PLC I/O

OPERATOR INTERFACE/ CONTROL DEVICES

POWER SOURCE

FIELD

HAD 123 ACTION HOA
HAR 123 ACTION RESET ETM
Y2 123 ALARM FAILED
TAH 123 ALARM
QS 123 SP SPEED
FAL 123 ALARM SEAL WATER FAIL
HAT 123 ACTION SS
KI 123 NUM ETM
Y1 123 STATUS RUNNING
YR 123 STATUS REMOTE
SIB 123 NUM SPEED
PAH 123 ALARM

HSAR 123 DI REMOTE
PLC-2
MS 123 DO RUN
PLC-2
SB 123 AI SPEED IN
PLC-2
SS 123 AO SPEED OUT
PLC-2
TSH 123 DI
PLC-2
AUX1 123 DI RUNNING
PLC-2
AUX2 123 DI FAILED
PLC-2
FSL 123 DI SEAL WATER FAIL
PLC-2
PSH 123 DI
PLC-2

Y1 123 RUN
YA 123 COMMON FAIL
HSR 123 RST
VFD-123
VFD
480VAC-3P
MCC-F

SV 123
FSL 123
FE 123
START
HSC 123
HSX 123
E-STOP
LOR
HSA 123
LCP 123
PMP 123
MWH 123
TSH 123
PI 123B
PSH 123
PE2 123
PI 123A
PLANT WATER
FI 123
S
M
1
A 50N01 50N02A
8"RAS
6"RAS
A 50N02A 50N03

FI-123 ROTAMETER __-__ GPM
FE-123 LOW FLOW SWITCH 0-__GPM
PI-123A PRESSURE INDICATOR 0-__PSIG NP105 TYP
PMP-123 RAS/WAS PUMP NO. 3 N 00N22
PI-123B PRESSURE INDICATOR 0-___ PSIG NP900 TYP
PSH-123 PRESSURE SWITCH HIGH ___PSIG OPEN NP901 TYP

GENERAL NOTES

1. ALL EQUIPMENT AND INSTRUMENT TAGGING ON THIS SHEET SHALL BE PRECEDED WITH FACILITY INDEX NO. 50, WHICH IS NOT SHOWN FOR CLARITY.

KEY NOTES

1. ASHCROFT TYPE 205 SADDLE DIAPHRAGM SEAL, NO EQUAL. PROVIDE FACTORY-CUT OPENINGS IN RAS PIPE FOR INSTALLATION OF DIAPHRAGM SEALS.

REV	DATE	BY	DESCRIPTION

DESIGNED CAG
DRAWN AD
CHECKED RAM
DATE SEPT 2013

REGISTERED PROFESSIONAL ENGINEER CARLO A. GROSSO No. 18851 ELECTRICAL STATE OF CALIFORNIA 9/16/2013

carollo

SAN LUIS OBISPO COUNTY

SAN LUIS OBISPO COUNTY
LOS OSOS WATER RECYCLING FACILITY PROJECT
INSTRUMENTATION
RAS WAS PUMPS - 3

VERIFY SCALES
BAR IS ONE INCH ON ORIGINAL DRAWING
0 1"
IF NOT ONE INCH ON THIS SHEET, ADJUST SCALES ACCORDINGLY

JOB NO. 8930A.11
DRAWING NO. 50N02A
SHEET NO. 451 OF 549

LAST SAVED BY: broepken

PROJECT NO. 8930A.11 FILE NAME: 8930A1150N002A.dwg

SCADA

CONTROL PANEL

PLC I/O

OPERATOR INTERFACE/ CONTROL DEVICES

POWER SOURCE

FIELD

YR 128 STATUS REMOTE
HAD 128 ACTION HOA
YOC 128 STATUS OC
HAO 128 ACTION OC
MSO 128 DO OPEN PLC–2
MSC 128 DO CLOSE PLC–2
HSAR 128 DI REMOTE PLC–2
ZSO 128 DI OPENED PLC–2
ZSC 128 DI CLOSED PLC–2
CB 128 TM 480VAC–3P MCC–E
ZSOC 128
OSC
HSG 128
LOR
HSA 128
EDR 128
DISC 128

YR 129 STATUS REMOTE
HAD 129 ACTION HOA
YOC 129 STATUS OC
HAO 129 ACTION OC
MSO 129 DO OPEN PLC–2
MSC 129 DO CLOSE PLC–2
HSAR 129 DI REMOTE PLC–2
ZSO 129 DI OPENED PLC–2
ZSC 129 DI CLOSED PLC–2
CB 129 TM 480VAC–3P MCC–F
ZSOC 129
OSC
HSG 129
LOR
HSA 129
EDR 129
DISC 129

FAH 127 ALARM
FR 127 TREND
QFH 127 SP
QFQ 127 SP WAS TOTAL
FAL 127 ALARM
FI 127 NUM
QFL 127 SP
QFI 127 SP WAS FLOW
F 127 AI PLC–2
CB 127 TM 120VAC–1P PCM–2
FIT 127
DISC 127
FE 127

YR 127 STATUS REMOTE
HAD 127 ACTION HOA
YOC 127 STATUS OC
ZI 127 NUM POSITION
HAK 127 ACTION MODULATE
MSC 127 DO CLOSE PLC–2
HSAR 127 DI REMOTE PLC–2
ZSO 127 DI OPENED PLC–2
ZSC 127 DI CLOSED PLC–2
Z2 127 AO POSITION PLC–2
Z1 127 AI POSITION PLC–2
CB 127 TM 480VAC–3P MCC–F
ZSOC 127
ZT 127
OSC
HSG 127
LOR
HSA 127
EAM 127
DISC 127
VAL 127
EAM 127

FAH 126 ALARM
FR 126 TREND
QFH 126 SP
FAL 126 ALARM
FI 126 NUM
QFL 126 SP
Y2 126
F 126 AI PLC–2
F 126 AO PLC–2
AUX2 126 DI FAILED PLC–2
CB 126 TM 120VAC–1P PCM–2
CB 126 TM 120VAC–1P LP–BF
FIT 126
DISC 126
FE 126
COS 126
S
S

A 50N02 50N03
B 50N02 50N03
A 50N02A 50N03
VAL 128
VAL 129
8"WAS
MM
6"WAS
SOLIDS STORAGE TANK A 50N03 50N08
2" SA
MM
6"RAS
6"RAS
OXIDATION DITCH NO. 1 A 50N03 20N01

EDR–128 WAS ISOLATION VALVE NO.1

EDR–129 WAS ISOLATION VALVE NO.2

FE–127 FLOW METER 0–700 GPM 6" NA900 TYP NF130 TYP NF135 TYP NF137 TYP

EAM–127 WAS DISCHARGE VALVE

FE–126 FLOW METER 0–900 GPM 6" NA900 TYP NF130 TYP NF135 TYP NF137 TYP

COS–126 RAS SAMPLER

GENERAL NOTES

1. ALL EQUIPMENT AND INSTRUMENT TAGGING ON THIS SHEET SHALL BE PRECEDED WITH FACILITY INDEX NO. 50, WHICH IS NOT SHOWN FOR CLARITY.

REV	DATE	BY	DESCRIPTION

DESIGNED CAG
DRAWN AD
CHECKED RAM
DATE SEPT 2013

REGISTERED PROFESSIONAL ENGINEER CARLO A. GROSSI No. 16851 ELECTRICAL STATE OF CALIFORNIA 9/16/2013

carollo

SAN LUIS OBISPO COUNTY

SAN LUIS OBISPO COUNTY

LOS OSOS WATER RECYCLING FACILITY PROJECT

INSTRUMENTATION

RAS WAS PUMPS - 4

VERIFY SCALES
BAR IS ONE INCH ON ORIGINAL DRAWING
0 1"
IF NOT ONE INCH ON THIS SHEET, ADJUST SCALES ACCORDINGLY

JOB NO. 8930A.11
DRAWING NO. 50N03
SHEET NO. 452 OF 549

LAST SAVED BY: broepken

PROJECT NO. 8930A.11 FILE NAME: 8930A1150N003.dwg

GENERAL NOTES

1. ALL EQUIPMENT AND INSTRUMENT TAGGING ON THIS SHEET SHALL BE PRECEDED WITH FACILITY INDEX NO. 50, WHICH IS NOT SHOWN FOR CLARITY.

SCADA

HAJ 401 ACTION LS

PAH 401A ALARM INLET FILTER CLOGGED

YR 401 STATUS REMOTE

TAH 401A ALARM

HAD 401 ACTION HOA

HAR 401 ACTION RESET ETM

Y2 401 ALARM FAILED

HAT 401 ACTION SS

KI 401 NUM ETM

Y1 401 STATUS RUNNING

TAH 401 ALARM DISCH HIGH TEMP

PAH 401B ALARM DISCH HIGH PRESS

PLC I/O

HSAR 401 DI REMOTE PLC-2

AUX2 401 DI FAILED PLC-2

AUX1 401 DI RUNNING PLC-2

TSH 401A DI TEMP PLC-2

MS 401 DO RUN PLC-2

PSH 401A DI PLC-2

TSH 401 DI PLC-2

PSH 401B DI PLC-2

CONTROL PANEL

OPERATOR INTERFACE/ CONTROL DEVICES

HSR 401 RST

Y1 401 RUN

YA 401 COMMON FAIL

POWER SOURCE

MS-401

RVSS

480VAC-3P

MCC-E

FIELD

LOR

HSA 401

HSC 401 START

LCP 401

HSX 401 E-STOP

BLO 401

MWH 401

TSH 401A

TSH 401

TE 401

PSH 401B

PI 401B

PE 401B

PACKAGED BLOWER SKID (FBBS)

TI 401

PSH 401A

PI 401A

PE 401A

AIR INTAKE

SLUDGE STORAGE TANK

6" AA

A 50N04 50N07

PI-401A PRESSURE INDICATOR

PE-401A PRESSURE SWITCH HIGH

BLO-401 SLUDGE AERATION BLOWER NO. 1 M 00N21

TI-401 TEMPERATURE INDICATOR

TE-401 TEMPERATURE SWITCH HIGH

PI-401B PRESSURE INDICATOR

PE-401B PRESSURE SWITCH HIGH

REV	DATE	BY	DESCRIPTION

DESIGNED PCK
DRAWN CGR
CHECKED RAM
DATE SEPT 2013

REGISTERED PROFESSIONAL ENGINEER CARLO A. GROSSI No. 16851 ELECTRICAL STATE OF CALIFORNIA
9/16/2013

carollo

SAN LUIS OBISPO COUNTY

SAN LUIS OBISPO COUNTY

LOS OSOS WATER RECYCLING FACILITY PROJECT

INSTRUMENTATION

SLUDGE AERATION BLOWER NO. 1

VERIFY SCALES
BAR IS ONE INCH ON ORIGINAL DRAWING
0 1"
IF NOT ONE INCH ON THIS SHEET, ADJUST SCALES ACCORDINGLY

JOB NO. 8930A.11
DRAWING NO. 50N04
SHEET NO. 453 OF 549

LAST SAVED BY: broepken

PROJECT NO. 8930A.11 FILE NAME: 8930A1150N004.dwg

GENERAL NOTES

1. ALL EQUIPMENT AND INSTRUMENT TAGGING ON THIS SHEET SHALL BE PRECEDED WITH FACILITY INDEX NO. 50, WHICH IS NOT SHOWN FOR CLARITY.

SCADA

HAY 402 — ACTION TANK 1/TANK 2

HAJ 402 — ACTION LS

YR 402 — STATUS REMOTE

TAH 402A — ALARM

HAD 402 — ACTION HOA

HAR 402 — ACTION RESET ETM

Y2 402 — ALARM FAILED

HAT 402 — ACTION SS

KI 402 — NUM ETM

Y1 402 — STATUS RUNNING

PAH 402A — ALARM INLET FILTER CLOGGED

TAH 402 — ALARM DISCH HIGH TEMP

PAH 402B — ALARM DISCH HIGH PRESS

CONTROL PANEL

PLC I/O

HSAR 402 — DI REMOTE — PLC–2

AUX2 402 — DI FAILED — PLC–2

TSH 402A — DI TEMP — PLC–2

AUX1 402 — DI RUNNING — PLC–2

MS 402 — DO RUN — PLC–2

PSH 402A — DI — PLC–2

TSH 402 — DI — PLC–2

PSH 402B — DI — PLC–2

OPERATOR INTERFACE/ CONTROL DEVICES

POWER SOURCE

HSR 402 — RST

Y1 402 — RUN

YA 402 — COMMON FAIL

MS-402

RVSS
480VAC-3P
MCC-F

FIELD

HSA 402 — LOR

HSC 402 — START

LCP 402

HSX 402 — E–STOP

BLO 402

MWH 402

TSH 402A

TSH 402

TE 402

PSH 402B

PE 402B

PI 402B

PACKAGED BLOWER SKID (FBBS)

TI 402

PSH 402A

PE 402A

PI 402A

AIR INTAKE

6" AA

B — SLUDGE STORAGE TANK — 50N05 50N07

PI–402A PRESSURE INDICATOR

PE–402A PRESSURE SWITCH HIGH

BLO–402 SLUDGE AERATION BLOWER NO. 2 — M 00N21

TI–402 TEMPERATURE INDICATOR

TE–402 TEMPERATURE SWITCH HIGH

PI–402B PRESSURE INDICATOR

PE–402B PRESSURE SWITCH HIGH

REV	DATE	BY	DESCRIPTION

DESIGNED PCK
DRAWN CGR
CHECKED RAM
DATE SEPT 2013

REGISTERED PROFESSIONAL ENGINEER — CARLO A. GROSSI — No. 16851 — ELECTRICAL — STATE OF CALIFORNIA — 9/16/2013

carollo

SAN LUIS OBISPO COUNTY

SAN LUIS OBISPO COUNTY

LOS OSOS WATER RECYCLING FACILITY PROJECT

INSTRUMENTATION

SLUDGE AERATION BLOWER NO. 2

VERIFY SCALES
BAR IS ONE INCH ON ORIGINAL DRAWING
0 — 1"
IF NOT ONE INCH ON THIS SHEET, ADJUST SCALES ACCORDINGLY

JOB NO. 8930A.11
DRAWING NO. 50N05
SHEET NO. 454 OF 549

LAST SAVED BY: broepken

PROJECT NO. 8930A.11 FILE NAME: 8930A1150N005.dwg

GENERAL NOTES

1. ALL EQUIPMENT AND INSTRUMENT TAGGING ON THIS SHEET SHALL BE PRECEDED WITH FACILITY INDEX NO. 50, WHICH IS NOT SHOWN FOR CLARITY.

SCADA

HAJ 403 — ACTION LS

PAH 403A — ALARM INLET FILTER CLOGGED

YR 403 — STATUS REMOTE
TAH 403A — ALARM
HAD 403 — ACTION HOA
HAR 403 — ACTION RESET ETM
Y2 403 — ALARM FAILED
HAT 403 — ACTION SS
KI 403 — NUM ETM
Y1 403 — STATUS RUNNING

TAH 403 — ALARM DISCH HIGH TEMP

PAH 403B — ALARM DISCH HIGH PRESS

CONTROL PANEL

PLC I/O

HSAR 403 — DI REMOTE — PLC-2
AUX2 403 — DI FAILED — PLC-2
TSH 403A — DI TEMP — PLC-2
AUX1 403 — DI RUNNING — PLC-2
MS 403 — DO RUN — PLC-2
PSH 403A — DI — PLC-2
TSH 403 — DI — PLC-2
PSH 403B — DI — PLC-2

OPERATOR INTERFACE/ CONTROL DEVICES

POWER SOURCE

HSR 403 — RST
Y1 403 — RUN
YA 403 — COMMON FAIL

MS-403
RVSS
480VAC-3P
MCC-F

FIELD

HSA 403 — LOR
HSC 403 — START
LCP 403 — E-STOP
HSX 403 — E-STOP

BLO 403
MWH 403
TSH 403A

TSH 403
TE 403
TI 403
PSH 403B
PE 403B
PI 403B

PACKAGED BLOWER SKID (FBBS)

PSH 403A
PE 403A
PI 403A

AIR INTAKE

6" AA — C — SLUDGE STORAGE TANK 50N06 50N07

PI-403A PRESSURE INDICATOR
PE-403A PRESSURE SWITCH HIGH
BLO-403 SLUDGE AERATION BLOWER NO. 3 (M 00N21)
TI-403 TEMPERATURE INDICATOR
TE-403 TEMPERATURE SWITCH HIGH
PI-403B PRESSURE INDICATOR
PE-403B PRESSURE SWITCH HIGH

REV	DATE	BY	DESCRIPTION

DESIGNED PCK
DRAWN CGR
CHECKED RAM
DATE SEPT 2013

REGISTERED PROFESSIONAL ENGINEER — CARLO A. GROSSI — No. 16851 — ELECTRICAL — STATE OF CALIFORNIA — 9/16/2013

carollo

SAN LUIS OBISPO COUNTY

SAN LUIS OBISPO COUNTY
LOS OSOS WATER RECYCLING FACILITY PROJECT
INSTRUMENTATION
SLUDGE AERATION BLOWER NO. 3

VERIFY SCALES
BAR IS ONE INCH ON ORIGINAL DRAWING
0 — 1"
IF NOT ONE INCH ON THIS SHEET, ADJUST SCALES ACCORDINGLY

JOB NO. 8930A.11
DRAWING NO. 50N06
SHEET NO. 455 OF 549

LAST SAVED BY: broepken

PROJECT NO. 8930A.11 FILE NAME: 8930A1150N006.dwg

SCADA

CONTROL PANEL — PLC I/O

CONTROL PANEL — OPERATOR INTERFACE/ CONTROL DEVICES

POWER SOURCE

FIELD

YR 404 STATUS REMOTE — HAD 404 ACTION HOA
YOC 404 STATUS OC — HAO 404 ACTION OC
MSO 404 DO OPEN PLC–2
MSC 404 DO CLOSE PLC–2
HSAR 404 DI REMOTE PLC–2
ZSO 404 DI OPENED PLC–2
ZSC 404 DI CLOSED PLC–2
CB 404 TM 480VAC–3P MCC–E
ZSOC 404
OSC
HSG 404
LOR
HSA 404
EDR 404
DISC 404
E/D
VAL 404
A 50N04 50N07 6" AA

YR 405 STATUS REMOTE — HAD 405 ACTION HOA
YOC 405 STATUS OC — HAO 405 ACTION OC
MSO 405 DO OPEN PLC–2
MSC 405 DO CLOSE PLC–2
HSAR 405 DI REMOTE PLC–2
ZSO 405 DI OPENED PLC–2
ZSC 405 DI CLOSED PLC–2
CB 405 TM 480VAC–3P MCC–F
ZSOC 405
OSC
HSG 405
LOR
HSA 405
EDR 405
DISC 405
E/D
VAL 405
B 50N05 50N07 6" AA

YR 406 STATUS REMOTE — HAD 406 ACTION HOA
YOC 406 STATUS OC — HAO 406 ACTION OC
MSO 406 DO OPEN PLC–2
MSC 406 DO CLOSE PLC–2
HSAR 406 DI REMOTE PLC–2
ZSO 406 DI OPENED PLC–2
ZSC 406 DI CLOSED PLC–2
CB 406 TM 480VAC–3P MCC–F
ZSOC 406
OSC
HSG 406
LOR
HSA 406
EDR 406
DISC 406
E/D
VAL 406
C 50N06 50N07 6" AA

YR 407 STATUS REMOTE — HAD 407 ACTION HOA
YOC 407 STATUS OC — HAO 407 ACTION OC
MSO 407 DO OPEN PLC–2
MSC 407 DO CLOSE PLC–2
HSAR 407 DI REMOTE PLC–2
ZSO 407 DI OPENED PLC–2
ZSC 407 DI CLOSED PLC–2
CB 407 TM 480VAC–3P MCC–E
ZSOC 407
OSC
HSG 407
LOR
HSA 407
EDR 407
DISC 407
VAL 407
M/O

YR 408 STATUS REMOTE — HAD 408 ACTION HOA
YOC 408 STATUS OC — HAO 408 ACTION OC
MSO 408 DO OPEN PLC–2
MSC 408 DO CLOSE PLC–2
HSAR 408 DI REMOTE PLC–2
ZSO 408 DI OPENED PLC–2
ZSC 408 DI CLOSED PLC–2
CB 408 TM 480VAC–3P MCC–F
ZSOC 408
OSC
HSG 408
LOR
HSA 408
EDR 408
DISC 408
VAL 408
M/O

A 50N07 50N08 6" AA
B 50N07 50N09 6" AA

EDR–404
BLOWER NO. 1 DISCHARGE VALVE

EDR–405
BLOWER NO. 2 DISCHARGE VALVE

EDR–406
BLOWER NO. 3 DISCHARGE VALVE

EDR–407
BLOWER CROSS–TIE VALVE NO. 1

EDR–408
BLOWER CROSS–TIE VALVE NO. 2

GENERAL NOTES

1. ALL EQUIPMENT AND INSTRUMENT TAGGING ON THIS SHEET SHALL BE PRECEDED WITH FACILITY INDEX NO. 50, WHICH IS NOT SHOWN FOR CLARITY.

REV	DATE	BY	DESCRIPTION

DESIGNED PCK
DRAWN CGR
CHECKED RAM
DATE SEPT 2013

REGISTERED PROFESSIONAL ENGINEER — CARLO A. GRONG — No. 18851 — ELECTRICAL — STATE OF CALIFORNIA — 9/16/2013

carollo

SAN LUIS OBISPO COUNTY

SAN LUIS OBISPO COUNTY
LOS OSOS WATER RECYCLING FACILITY PROJECT
INSTRUMENTATION
SLUDGE AERATION BLOWER DISCHARGE VALVES

VERIFY SCALES
BAR IS ONE INCH ON ORIGINAL DRAWING
0 1"
IF NOT ONE INCH ON THIS SHEET, ADJUST SCALES ACCORDINGLY

JOB NO. 8930A.11
DRAWING NO. 50N07
SHEET NO. 456 OF 549

LAST SAVED BY: broepken

PROJECT NO. 8930A.11 FILE NAME: 8930A1150N007.dwg

SCADA

HAY 460 ACTION ENABLE / DISABLE

YR 411 STATUS REMOTE
HAD 411 ACTION HOA
YOC 411 STATUS OC
HAO 411 ACTION OC

YR 413 STATUS REMOTE
HAD 413 ACTION HOA
YOC 413 STATUS OC
ZI 413 NUM POSITION
HAK 413 ACTION JOJC

LAH 411 ALARM
LR 411 TREND
LAL 411 ALARM
QLAH 411 SP
LI 411 NUM LEVEL
QLAL 411 SP

QL1 411 SP STOP
QL2 411 SP START
DEWATERING

QL1 411 SP STOP
QL2 411 SP START
BLOWER

YR 414 STATUS REMOTE
HAD 414 ACTION HOA
ZI 414 NUM POSITION
HAK 414 ACTION JOJC
YOC 414 STATUS OC

YR 417 STATUS REMOTE
HAD 417 ACTION HOA
YOC 417 STATUS OC
HAO 417 ACTION OC

GENERAL NOTES

1. ALL EQUIPMENT AND INSTRUMENT TAGGING ON THIS SHEET SHALL BE PRECEDED WITH FACILITY INDEX NO. 50, WHICH IS NOT SHOWN FOR CLARITY.

KEY NOTES

1 NORMALLY OPEN.

CONTROL PANEL

PLC I/O

MSO 411 DO OPEN PLC-2
MSC 411 DO CLOSE PLC-2
HSAR 411 DI REMOTE PLC-2
ZSO 411 DI OPENED PLC-2
ZSC 411 DI CLOSED PLC-2

MSO 413 DO OPEN PLC-2
MSC 413 DO CLOSE PLC-2
HSAR 413 DI REMOTE PLC-2
ZSO 413 DI OPENED PLC-2
ZSC 413 DI CLOSED PLC-2
Z 413 AI POSITION PLC-2

PD 411 AI PLC-2

MSO 414 DO OPEN PLC-2
MSC 414 DO CLOSE PLC-2
HSAR 414 DI REMOTE PLC-2
ZSO 414 DI OPENED PLC-2
ZSC 414 DI CLOSED PLC-2
Z 414 AI POSITION PLC-2

MSO 417 DO OPEN PLC-2
MSC 417 DO CLOSE PLC-2
HSAR 417 DI REMOTE PLC-2
ZSO 417 DI OPENED PLC-2
ZSC 417 DI CLOSED PLC-2

OPERATOR INTERFACE/ CONTROL DEVICES

POWER SOURCE

CB 411 TM 480VAC-3P MCC-E
CB 413 TM 480VAC-3P MCC-E
CB 414 TM 480VAC-3P MCC-E
CB 417 TM 480VAC-3P MCC-E

FIELD

ZSOC 411 OSC
HSG 411 LOR
HSA 411
EDR 411
DISC 411

ZSOC 413 OSC
HSG 413 LOR
HSA 413
EDM 413
DISC 413

ZT 413

PDIT 411
PE 411

ZSOC 414 OSC
HSG 414 LOR
HSA 414
EDM 414
DISC 414

ZT 414

ZSOC 417 OSC
HSG 417 LOR
HSA 417
EDR 417
DISC 417

SCUM PUMP STATION
A 23N01 50N08
4" SC

A 50N03 50N08
6" WAS
VAL 411

A 50N07 50N08
6" AA

SLUDGE STORAGE TANK NO. 2
A 50N08 50N09

GAT 413
GAT 414
DECANT BOX

SLUDGE STORAGE TANK NO. 1
GAT 419 1

CONTINUED ON DRAWING 50N09

C 50N09 50N08
8" TWAS
8" TWAS
8" TWAS
DEWATERING FEED PUMPS
A 50N08 50N10

VAL 417

PLANT DRAIN PUMP STATION
6" PD
6" PD
A 50N08 04N01
B 50N09 50N08
6" PD

EDR-411 SLUDGE STORAGE TANK NO. 1 WAS FEED VALVE

EDM-413 SLUDGE STORAGE TANK NO. 1 – WEIR GATE NO. 1

PE-411 PRESSURE DIFFERENTIAL TRANSMITTER 0-20FT WC NP902 TYP

EDM-414 SLUDGE STORAGE TANK NO. 1 – WEIR GATE NO. 2

EDR-417 SLUDGE STORAGE TANK NO. 1 DEWATERING FEED VALVE

REV	DATE	BY	DESCRIPTION

DESIGNED PCK
DRAWN CGR
CHECKED RAM
DATE SEPT 2013

REGISTERED PROFESSIONAL ENGINEER CARLO A. GROSSO No. 16851 ELECTRICAL STATE OF CALIFORNIA 9/16/2013

carollo

SAN LUIS OBISPO COUNTY

SAN LUIS OBISPO COUNTY
LOS OSOS WATER RECYCLING FACILITY PROJECT
INSTRUMENTATION
SLUDGE STORAGE TANK NO. 1

VERIFY SCALES
BAR IS ONE INCH ON ORIGINAL DRAWING
0 1"
IF NOT ONE INCH ON THIS SHEET, ADJUST SCALES ACCORDINGLY

JOB NO. 8930A.11
DRAWING NO. 50N08
SHEET NO. 457 OF 549

LAST SAVED BY: broepken

PROJECT NO. 8930A.11 FILE NAME: 8930A1150N008.dwg

SCADA

CONTROL PANEL

PLC I/O

OPERATOR INTERFACE/ CONTROL DEVICES

POWER SOURCE

FIELD

YR 412 STATUS REMOTE
HAD 412 ACTION HOA
YOC 412 STATUS OC
HAO 412 ACTION OC
MSO 412 DO OPEN PLC-2
MSC 412 DO CLOSE PLC-2
HSAR 412 DI REMOTE PLC-2
ZSO 412 DI OPENED PLC-2
ZSC 412 DI CLOSED PLC-2
CB 412 TM 480VAC-3P MCC-F
ZSOC 412
HSG 412 OSC
HSA 412 LOR
EDR 412
DISC 412

YR 415 STATUS REMOTE
HAD 415 ACTION HOA
YOC 415 STATUS OC
ZI 415 NUM POSITION
HAK 415 ACTION JOJC
MSO 415 DO OPEN PLC-2
MSC 415 DO CLOSE PLC-2
HSAR 415 DI REMOTE PLC-2
ZSO 415 DI OPENED PLC-2
ZSC 415 DI CLOSED PLC-2
Z 415 AI POSITION PLC-2
CB 415 TM 480VAC-3P MCC-F
ZSOC 415
ZT 415
HSG 415 OSC
HSA 415 LOR
EDM 415
DISC 415

YR 416 STATUS REMOTE
HAD 416 ACTION HOA
YOC 416 STATUS OC
ZI 416 NUM POSITION
HAK 416 ACTION JOJC
MSO 416 DO OPEN PLC-2
MSC 416 DO CLOSE PLC-2
HSAR 416 DI REMOTE PLC-2
ZSO 416 DI OPENED PLC-2
ZSC 416 DI CLOSED PLC-2
Z 416 AI POSITION PLC-2
CB 416 TM 480VAC-3P MCC-F
ZSOC 416
ZT 416
HSG 416 OSC
HSA 416 LOR
EDM 416
DISC 416

LAH 412 ALARM SP
LAL 412 ALARM SP
QL1 412 SP STOP DEWATERING
QL2 412 SP START DEWATERING
QL3 412 SP STOP BLOWER
QL4 412 SP START BLOWER
QLAH 412
LR 412 TREND NUM LEVEL
LI 412
QLAL 412
PD 412 AI PLC-2
PDIT 412
PE 412

YR 418 STATUS REMOTE
HAD 418 ACTION HOA
YOC 418 STATUS OC
HAO 418 ACTION OC
MSO 418 DO OPEN PLC-2
MSC 418 DO CLOSE PLC-2
HSAR 418 DI REMOTE PLC-2
ZSO 418 DI OPENED PLC-2
ZSC 418 DI CLOSED PLC-2
CB 418 TM 480VAC-3P MCC-F
ZSOC 418
HSG 418 OSC
HSA 418 LOR
EDR 418
DISC 418

CONTINUED ON DRAWING 50N08

GAT 415
GAT 416
DECANT BOX
SLUDGE STORAGE TANK NO. 2

A 50N08 50N09 6" WAS VAL 412
B 50N07 50N09 6" AA
6" PD 50N09 04N01

8" TWAS C 50N09 50N08 DEWATERING FEED PUMPS
VAL 418
6" PD B 50N09 50N08 PLANT DRAIN PUMP STATION

EDR-412 SLUDGE STORAGE TANK FEED VALVE NO. 2
EDM-415 SLUDGE STORAGE TANK NO. 2 – WEIR GATE NO. 1
EDM-416 SLUDGE STORAGE TANK NO. 2 – WEIR GATE NO. 2
PE-412 PRESSURE DIFFERENTIAL TRANSMITTER 0-20FT WC NP902 TYP
EDR-418 SLUDGE STORAGE TANK NO. 2 DEWATERING FEED VALVE

GENERAL NOTES

1. ALL EQUIPMENT AND INSTRUMENT TAGGING ON THIS SHEET SHALL BE PRECEDED WITH FACILITY INDEX NO. 50, WHICH IS NOT SHOWN FOR CLARITY.

REV	DATE	BY	DESCRIPTION

DESIGNED PCK
DRAWN CGR
CHECKED RAM
DATE SEPT 2013

REGISTERED PROFESSIONAL ENGINEER CARLO A. GRONG No. 16851 ELECTRICAL STATE OF CALIFORNIA 9/16/2013

carollo

COUNTY OF SAN LUIS OBISPO ENGINEERING DEPARTMENT ESTABLISHED 1850

SAN LUIS OBISPO COUNTY

SAN LUIS OBISPO COUNTY
LOS OSOS WATER RECYCLING FACILITY PROJECT
INSTRUMENTATION
SLUDGE STORAGE TANK NO. 2

VERIFY SCALES
BAR IS ONE INCH ON ORIGINAL DRAWING
0 1"
IF NOT ONE INCH ON THIS SHEET, ADJUST SCALES ACCORDINGLY

JOB NO. 8930A.11
DRAWING NO. 50N09
SHEET NO. 458 OF 549

LAST SAVED BY: broepken

PROJECT NO. 8930A.11 FILE NAME: 8930A1150N009.dwg

SCADA

CONTROL PANEL
PLC I/O

OPERATOR INTERFACE/
CONTROL DEVICES

POWER SOURCE

FIELD

GENERAL NOTES

1. ALL EQUIPMENT AND INSTRUMENT TAGGING ON THIS SHEET SHALL BE PRECEDED WITH FACILITY INDEX NO. 50, WHICH IS NOT SHOWN FOR CLARITY.

KEY NOTES

1. ASHCROFT TYPE 205 SADDLE DIAPHRAGM SEAL, NO EQUAL. PROVIDE FACTORY-CUT OPENINGS IN RAS PIPE FOR INSTALLATION OF DIAPHRAGM SEALS.

SLUDGE HOLDING TANKS

DEWATERING INLET VALVE NO. 2

PI-423A
PRESSURE INDICATOR
0–30 PSIG

TE-423A
STATOR TEMPERATURE SENSOR

PI-423B
PRESSURE INDICATOR
0–100 PSIG

EDR-424
DEWATERING OUTLET VALVE NO. 1

EDR-421
DEWATERING INLET VALVE NO. 1

GRI-422
DEWATERING FEED GRINDER NO. 1

PMP-423
DEWATERING FEED PUMP NO. 1

PE-423
PRESSURE SWITCH HIGH
0–____PSIG

FE-425
FLOW METER
0–____ GPM
____"

SCREW PRESS NO. 1

SCREW PRESS NO. 2

REV	DATE	BY	DESCRIPTION

DESIGNED PCK
DRAWN CGR
CHECKED RAM
DATE SEPT 2013

REGISTERED PROFESSIONAL ENGINEER
CARLO A. GROSSINI
No. 16851
ELECTRICAL
STATE OF CALIFORNIA
9/16/2013

carollo

SAN LUIS OBISPO COUNTY

SAN LUIS OBISPO COUNTY
LOS OSOS WATER RECYCLING FACILITY PROJECT
INSTRUMENTATION
DEWATERING TRAIN NO. 1

VERIFY SCALES
BAR IS ONE INCH ON ORIGINAL DRAWING
0 1"
IF NOT ONE INCH ON THIS SHEET, ADJUST SCALES ACCORDINGLY

JOB NO. 8930A.11
DRAWING NO. 50N10
SHEET NO. 459 OF 549

LAST SAVED BY: broepken

PROJECT NO. 8930A.11 FILE NAME: 8930A1150N010.dwg

SCADA

CONTROL PANEL — PLC I/O

OPERATOR INTERFACE/ CONTROL DEVICES

POWER SOURCE

FIELD

YR 425 STATUS REMOTE; HAD 425 ACTION HOA; YOC 425 STATUS OC; HAO 425 ACTION OC

MSO 425 DO OPEN PLC-2; MSC 425 DO CLOSE PLC-2; HSAR 425 DI REMOTE PLC-2; ZSO 425 DI OPENED PLC-2; ZSC 425 DI CLOSED PLC-2

ZSOC 425; OSC; HSG 425; LOR; HSA 425; EDR 425; DISC 425; E/D; VAL 425

CB 425 TM 480VAC-3P MCC-F

Y2 426 ALARM FAILED; HAR 426 ACTION RESET ETM; Y1 426 STATUS RUNNING; KI 426 NUM ETM

AUX2 426 DI FAILED PLC-2; AUX1 426 DI RUNNING PLC-2

CB 426 TM 480VAC-3P MCC-F

VCP 426; HSX 426 E-STOP; LCP 426; GRI 426

RUNNING; AUTO; RUN

CPT 427 120VAC VFD-427

TAH 427A ALARM STATOR TEMP; TSH 427A DI STATOR TEMP PLC-2; TE 427A

PI 427A; 1

QS 427 SP SPEED; SIB 427 NUM SPEED; Y2 427 ALARM FAILED

HAD 427 ACTION HOA; HAR 427 ACTION RESET ETM; Y1 427 STATUS RUNNING

HAT 427 ACTION SS; KI 427 NUM ETM; YR 427 STATUS REMOTE; TAH 427 ALARM HIGH TEMP

HSR 427 RST; Y1 427 RUN; YA 427 COMMON FAIL

VFD-427

VFD 480VAC-3P MCC-F

LOCAL

START; E-STOP; HSC 427; HSX 427; LOR; LCP 427; HSA 427

HSR 427 DI REMOTE PLC-2; SB 427 AI SPEED IN PLC-2; SS 427 AO SPEED OUT PLC-2

TSH 427 DI TEMP PLC-2; AUX2 427 DI VFD FAIL PLC-2; AUX1 427 DI RUNNING PLC-2; MS 427 DO RUN PLC-2

PMP 427; MWH 427; TSH 427

FROM FSL-427 ON DWG 50N12

TO SV-427 ON DWG 50N12

PAH 427 ALARM; PSH 427 DI PLC-2; PE 427

SEAL WATER D 50N12 50N11

YR 428 STATUS REMOTE; HAD 428 ACTION HOA; YOC 428 STATUS OC; HAO 428 ACTION OC

MSO 428 DO OPEN PLC-2; MSC 428 DO CLOSE PLC-2; HSAR 428 DI REMOTE PLC-2; ZSO 428 DI OPENED PLC-2; ZSC 428 DI CLOSED PLC-2

ZSOC 428; OSC; HSG 428; LOR; HSA 428; EDR 428; DISC 428; E/D; VAL 428

CB 428 TM 480VAC-3P MCC-F

PSH 427; PE 427

FQI 429 NUM; QKL 429 SP STOP; QF1 429 SP FEED RATE

FAH 429 ALARM; FR 429 TREND; QFH 429 SP

FAL 429 ALARM; FI 429 NUM; QFL 429 SP STOP

F 429 AI PLC-2

FIT 429; FE 429

DISC 429; CB 429 TM 120VAC-1P PCM-2

MM

SLUDGE STORAGE TANKS B 50N10 50N11 8" TWAS

6" TWAS A 50N11 50N10

PI-427A PRESSURE INDICATOR 0-30 PSIG NP900 TYP

TE-427A STATOR TEMPERATURE SENSOR

PI-427B PRESSURE INDICATOR 0-100 PSIG NP900 TYP

EDR-428 DEWATERING OUTLET VALVE NO. 2

EDR-425 DEWATERING INLET VALVE NO. 2

GRI-426 DEWATERING FEED GRINDER NO. 2

PMP-427 DEWATERING FEED PUMP NO. 2 L 00N20

PE-427 PRESSURE SWITCH HIGH 0-____PSIG NP901 TYP

FE-429 FLOW METER 0-____ GPM ____" NA900 TYP NF130 TYP NF135 TYP NF137 TYP

GENERAL NOTES

1. ALL EQUIPMENT AND INSTRUMENT TAGGING ON THIS SHEET SHALL BE PRECEDED WITH FACILITY INDEX NO. 50, WHICH IS NOT SHOWN FOR CLARITY.

KEY NOTES

1. ASHCROFT TYPE 205 SADDLE DIAPHRAGM SEAL, NO EQUAL. PROVIDE FACTORY-CUT OPENINGS IN RAS PIPE FOR INSTALLATION OF DIAPHRAGM SEALS.

REV	DATE	BY	DESCRIPTION

DESIGNED PCK
DRAWN CGR
CHECKED RAM
DATE SEPT 2013

REGISTERED PROFESSIONAL ENGINEER CARLO A. GRIO No. 15851 ELECTRICAL STATE OF CALIFORNIA 9/16/2013

carollo

SAN LUIS OBISPO COUNTY

SAN LUIS OBISPO COUNTY
LOS OSOS WATER RECYCLING FACILITY PROJECT
INSTRUMENTATION
DEWATERING TRAIN NO. 2

VERIFY SCALES
BAR IS ONE INCH ON ORIGINAL DRAWING
0 1"
IF NOT ONE INCH ON THIS SHEET, ADJUST SCALES ACCORDINGLY

JOB NO. 8930A.11
DRAWING NO. 50N11
SHEET NO. 460 OF 549

LAST SAVED BY: broepken

PROJECT NO. 8930A.11 FILE NAME: 8930A1150N011.dwg

SCADA

CONTROL PANEL

PLC I/O

OPERATOR INTERFACE/
CONTROL DEVICES

POWER SOURCE

FIELD

FAH 309 — ALARM
FR 309 — TREND
QFH 309 — SP
FAL 309 — ALARM
FI 309 — NUM
QFL 309 — SP

FAL 423 — ALARM

FAL 427 — ALARM

F 309 — AI — PLC–2

FSL 423 — DI — PLC–2

FSL 427 — DI — PLC–2

CB 309 — TM 120VAC–1P — PCM–2

FIT 309

DISC 309

FE 309

A — 40N03 50N12

MM

4" PW

6" PW

TO PLANT WATER SYSTEM

TO ON-SITE IRRIGATION

TO VFD-423 ON DWG 50N10

FROM VFD-423 ON DWG 50N10

SV 423

FSL 423

FE 423

PI 423

PLANT WATER

S

FI 423

C — 50N12 50N10

TO VFD-427 ON DWG 50N11

FROM VFD-427 ON DWG 50N11

SV 427

FSL 427

FE 427

PI 427

PLANT WATER

S

FI 427

D — 50N12 50N11

FE–309 FLOW METER 0–700 GPM 4" — NA900 TYP — NF130 TYP — NF135 TYP — NF137 TYP

FI–423 ROTAMETER — FE–423 LOW FLOW SWITCH — PI–423 PRESSURE INDICATOR 0–100 PSIG — NP105 TYP

FI–427 ROTAMETER — FE–427 LOW FLOW SWITCH — PI–427 PRESSURE INDICATOR 0–100 PSIG — NP105 TYP

GENERAL NOTES

1. ALL EQUIPMENT AND INSTRUMENT TAGGING ON THIS SHEET SHALL BE PRECEDED WITH FACILITY INDEX 50, WHICH IS NOT SHOWN FOR CLARITY.

REV	DATE	BY	DESCRIPTION

DESIGNED CAG
DRAWN CGR
CHECKED RAM
DATE SEPT 2013

REGISTERED PROFESSIONAL ENGINEER — CARLO A. GROSSO — No. 18851 — ELECTRICAL — STATE OF CALIFORNIA — 9/16/2013

carollo

SAN LUIS OBISPO COUNTY

SAN LUIS OBISPO COUNTY

LOS OSOS WATER RECYCLING FACILITY PROJECT

INSTRUMENTATION

DEWATERING FEED PUMPS SEAL WATER

VERIFY SCALES
BAR IS ONE INCH ON ORIGINAL DRAWING
0 — 1"
IF NOT ONE INCH ON THIS SHEET, ADJUST SCALES ACCORDINGLY

JOB NO. 8930A.11
DRAWING NO. 50N12
SHEET NO. 461 OF 549

LAST SAVED BY: broepken

PROJECT NO. 8930A.11 FILE NAME: 8930A1150N012.dwg

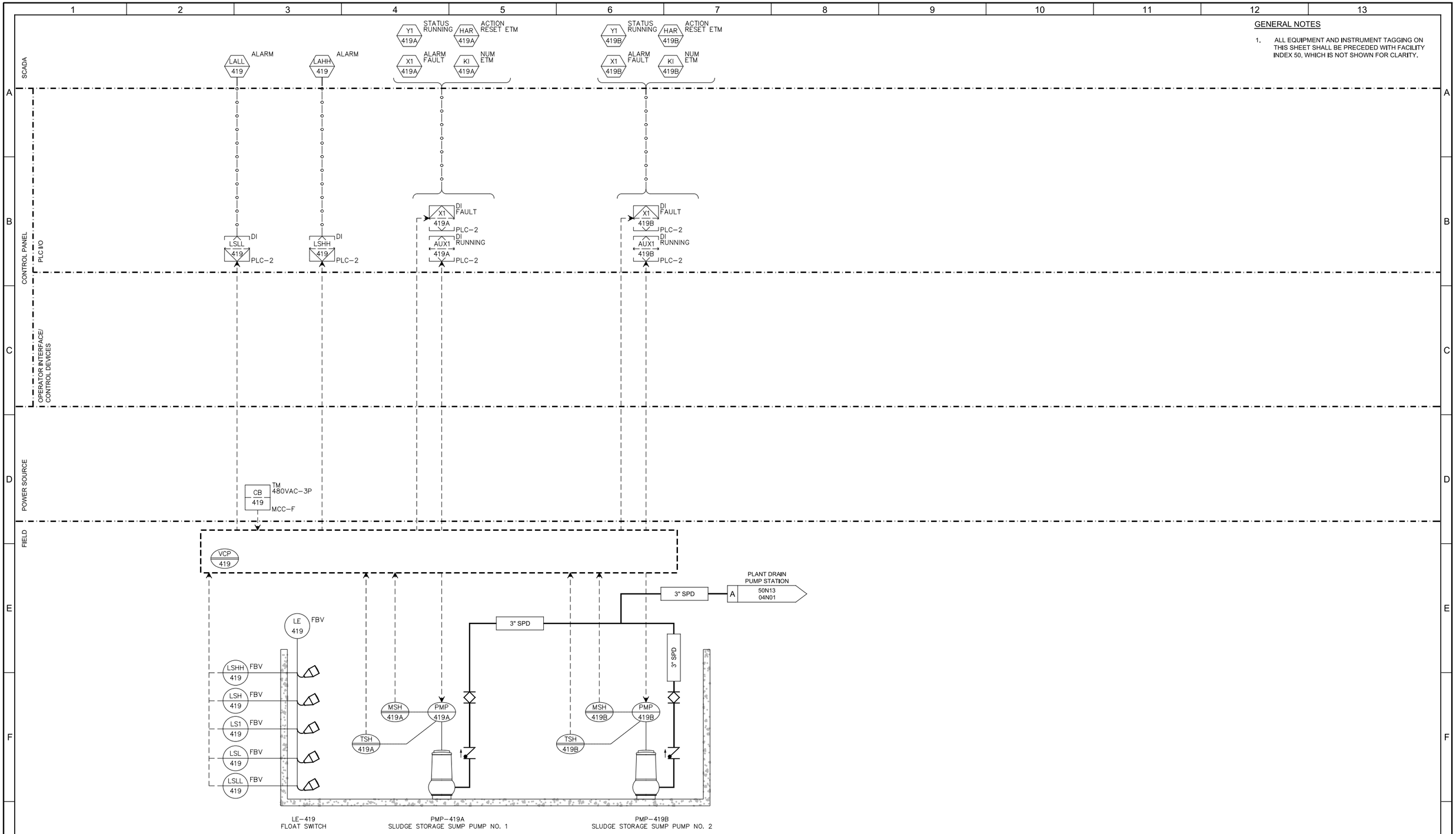

GENERAL NOTES

1. ALL EQUIPMENT AND INSTRUMENT TAGGING ON THIS SHEET SHALL BE PRECEDED WITH FACILITY INDEX 50, WHICH IS NOT SHOWN FOR CLARITY.

REV	DATE	BY	DESCRIPTION

DESIGNED CAG
DRAWN CC
CHECKED RAM
DATE SEPT 2013

REGISTERED PROFESSIONAL ENGINEER CARLO A. GROSSO No. 18851 ELECTRICAL STATE OF CALIFORNIA
9/16/2013

carollo

SAN LUIS OBISPO COUNTY

SAN LUIS OBISPO COUNTY
LOS OSOS WATER RECYCLING FACILITY PROJECT
INSTRUMENTATION
SLUDGE STORAGE SUMP PUMPS

VERIFY SCALES
BAR IS ONE INCH ON ORIGINAL DRAWING
0 1"
IF NOT ONE INCH ON THIS SHEET, ADJUST SCALES ACCORDINGLY

JOB NO. 8930A.11
DRAWING NO. 50N13
SHEET NO. 462 OF 549

LAST SAVED BY: broepken

PROJECT NO. 8930A.11 FILE NAME: 8930A1150N013.dwg

SCADA

HAM 461 — ACTION AM — TRAIN 1
HAT 461 — ACTION SS — TRAIN 1
QK1 461 — SP START TIME — TRAIN 1
QK2 461 — SP DURATION — TRAIN 1
KI1 461 — NUM DURATION TIMER — TRAIN 1
KI1 460 — NUM START DELAY — PBU
QK1 460 — PBU SP START DELAY
QK5 460 — PBU SP STOP DELAY
KI6 460 — PBU NUM STOP DELAY
QK2 460 — SP START DELAY — FEED PUMP
KI2 460 — FEED PUMP NUM START DELAY
KI4 460 — FEED PUMP NUM STOP DELAY — SCREW PRESS
QK4 460 — SCREW PRESS SP STOP DELAY
KI3 460 — SP START DELAY — CNV
QK3 460 — CNV SP START DELAY
KI5 460 — CNV NUM STOP DELAY
PAL 431 — ALARM AIR PRESS LOW
PAH 431 — ALARM SYSTEM PRESS HIGH
PI 431 — NUM PRESS SYSTEM
YE 431 — STATUS E–STOP
YR 431 — STATUS REMOTE
Y1 431 — STATUS RUNNING
Y2 431 — ALARM FAILED
Y3 431 — STATUS WASH CYCLE
Y4 431 — ACTIVE STATUS WASH CYCLE
Y5 431 — READY STATUS SEWATERING MODE
Y6 431 — READY STATUS SEWATERING MODE — ACTIVE
TAH 431 — ALARM TEMP
IAH 431 — ALARM HIGH CURRENT
KI 431 — NUM ETM
SI 431 — NUM SPEED

GENERAL NOTES

1. ALL EQUIPMENT AND INSTRUMENT TAGGING ON THIS SHEET SHALL BE PRECEDED WITH FACILITY INDEX NO. 51, WHICH IS NOT SHOWN FOR CLARITY.

KEY NOTES

1. POWER SUPPLY 480VAC-3P.
2. PROVIDED BY CONTRACTOR.

CONTROL PANEL — PLC I/O

UC 431 — ENET VCP–431 — PLC–2

OPERATOR INTERFACE/ CONTROL DEVICES

POWER SOURCE

CB 431 — TM 480VAC–3P — MCC–E

FIELD

VCP 431

PIT 431 FBSPS
PRE 431 FBSPS
PE 431 FBSPS
VCP 431A
PSH 434 FBSPS
PE 434 FBSPS
ARC 431 FBSPS

4"FAD
4"FAD
4"FAD
4" FAD
8" FAD
ODOR CONTROL FACILITY — A 51N01 11N01
B 51N03 51N01

SV 430
S
1/4" HPA

DEWATERING FEED PUMP — A 50N10 51N01 — 6" TWAS
POLYMER MIXING VALVE
2 NO
POLYMER FEED — A 51N05 51N01 — 2" POL

PLANT DRAIN PUMP STATION — 51N01 04N01 A — 8" FIL
SV 431
PI 431
S
2" PW
6" PW
DWS
CAKE CONVEYOR NO. 1 — A 51N01 51N03

PRE–431 DEWATERING SCREW PRESS NO. 1
PE–431 PRESSURE INDICATING TRANSMITTER
SV–431 SOLENOID VALVE
PI–431 PRESSURE INDICATOR 0–160 PSIG
NP105 TYP
PE–434 PRESSURE INDICATING TRANSMITTER
ARC–431 AIR COMPRESSOR

REV	DATE	BY	DESCRIPTION

DESIGNED PCK
DRAWN CGR
CHECKED RAM
DATE SEPT 2013

REGISTERED PROFESSIONAL ENGINEER — CARLO A. GROSSO — No. 16851 — ELECTRICAL — STATE OF CALIFORNIA — 9/16/2013

carollo

SAN LUIS OBISPO COUNTY

SAN LUIS OBISPO COUNTY

LOS OSOS WATER RECYCLING FACILITY PROJECT

INSTRUMENTATION

DEWATERING SCREW PRESS NO. 1

VERIFY SCALES
BAR IS ONE INCH ON ORIGINAL DRAWING
0 — 1"
IF NOT ONE INCH ON THIS SHEET, ADJUST SCALES ACCORDINGLY

JOB NO. 8930A.11
DRAWING NO. 51N01
SHEET NO. 463 OF 549

LAST SAVED BY: broepken

PROJECT NO. 8930A.11 FILE NAME: 8930A1151N001.dwg

SCADA

HAM 412 — ACTION AM — TRAIN 2
HAT 412 — ACTION SS — TRAIN 2
QK1 412 — SP START TIME — TRAIN 2
QK2 412 — SP DURATION — TRAIN 2
KI2 412 — NUM DURATION TIMER — TRAIN 2

PAL 432 — ALARM AIR PRESS LOW
PAH 432 — ALARM SYSTEM PRESS HIGH
PI 432 — NUM PRESS SYSTEM

YE 432 — STATUS E–STOP
YR 432 — STATUS REMOTE
Y1 432 — STATUS RUNNING
Y2 432 — ALARM FAILED

Y3 432 — STATUS WASH CYCLE
Y4 432 — ACTIVE STATUS WASH CYCLE
Y5 432 — READY STATUS SEWATERING MODE
Y6 432 — READY STATUS SEWATERING MODE

TAH 432 — ALARM TEMP
IAH 432 — ALARM HIGH CURRENT
KI 432 — NUM ETM
SI 432 — NUM SPEED

ACTIVE

GENERAL NOTES

1. ALL EQUIPMENT AND INSTRUMENT TAGGING ON THIS SHEET SHALL BE PRECEDED WITH FACILITY INDEX NO. 51, WHICH IS NOT SHOWN FOR CLARITY.

KEY NOTES

1. POWER SUPPLY 480VAC-3P.
2. PROVIDED BY CONTRACTOR.

CONTROL PANEL
PLC I/O
OPERATOR INTERFACE/ CONTROL DEVICES

UC 432 — ENET VCP–432 — PLC–2

POWER SOURCE

CB 432 — TM 480VAC–3P — MCC–F

FIELD

VCP 432

PIT 432 — FBSPS
PRE 432 — FBSPS
PE 432 — FBSPS

VCP 432A

PSH 436 — FBSPS
PE 436 — FBSPS

ARC 432 — FBSPS

4"FAD
4"FAD
4"FAD
4"FAD

B — 51N02 51N03

SV 432
S
1/4" HPA

DEWATERING FEED PUMP
B — 50N10 51N02 — 6" TWAS

POLYMER FEED
B — 51N05 51N01 — 2" POL

POLYMER MIXING VALVE
2
NO

2" PW

PLANT DRAIN PUMP STATION
51N02 04N01 — 8" FIL

SV 432
PI 432
S

6" PW

DWS

CAKE CONVEYOR NO. 2
A — 51N02 51N03

PRE–432 DEWATERING SCREW PRESS NO. 2
PE–432 PRESSURE INDICATING TRANSMITTER
SV–432 SOLENOID VALVE
PI–432 PRESSURE INDICATOR 0–160 PSIG
NP105 TYP — PE–436 PRESSURE INDICATING TRANSMITTER
ARC–432 AIR COMPRESSOR

REV	DATE	BY	DESCRIPTION

DESIGNED PCK
DRAWN CGR
CHECKED RAM
DATE SEPT 2013

REGISTERED PROFESSIONAL ENGINEER — CARLO A. GROSS — No. 16851 — ELECTRICAL — STATE OF CALIFORNIA — 9/16/2013

carollo

SAN LUIS OBISPO COUNTY

SAN LUIS OBISPO COUNTY
LOS OSOS WATER RECYCLING FACILITY PROJECT
INSTRUMENTATION
DEWATERING SCREW PRESS NO. 2

VERIFY SCALES
BAR IS ONE INCH ON ORIGINAL DRAWING
0 — 1"
IF NOT ONE INCH ON THIS SHEET, ADJUST SCALES ACCORDINGLY

JOB NO. 8930A.11
DRAWING NO. 51N02
SHEET NO. 464 OF 549

LAST SAVED BY: broepken

PROJECT NO. 8930A.11 FILE NAME: 8930A1151N002.dwg

GENERAL NOTES

1. ALL EQUIPMENT AND INSTRUMENT TAGGING ON THIS SHEET SHALL BE PROCEDED WITH FACILITY INDEX NO. 51, WHICH IS NOT SHOWN FOR CLARITY.

SCADA

HAD 433 ACTION HOA
HAT 433 ACTION SS
HAR 433 ACTION RESET–ETM
Y2 433 ALARM FAILED
TAH 433 ALARM
SAL 433 ALARM
KI 433 NUM ETM
YR 433 STATUS REMOTE
Y1 433 STATUS RUN

HAD 434 ACTION HOA
HAT 434 ACTION SS
HAR 434 ACTION RESET–ETM
Y2 434 ALARM FAILED
TAH 434 ALARM
SAL 434 ALARM
KI 434 NUM ETM
YR 434 STATUS REMOTE
Y1 434 STATUS RUN

CONTROL PANEL

PLC I/O

HSAR 433 DI REMOTE PLC–2
AUX2 433 DI OL PLC–2
AUX1 433 DI RUN PLC–2
SSL 433 DI PLC–2
TSH 433 DI HIGH TEMP PLC–2
MS 433 DO RUN PLC–2

HSAR 434 DI REMOTE PLC–2
AUX2 434 DI OL PLC–2
AUX1 434 DI RUN PLC–2
SSL 434 DI PLC–2
TSH 434 DI HIGH TEMP PLC–2
MS 434 DO RUN PLC–2

OPERATOR INTERFACE/ CONTROL DEVICES

POWER SOURCE

HSR 433 RST
Y1 433 RUNNING
YA 433 COMMON FAIL
MS-433
FVNR
480VAC-3P
MCC-E

HSR 434 RST
Y1 434 RUNNING
YA 434 COMMON FAIL
MS-434
FVNR
480VAC-3P
MCC-F

FIELD

HSA 433 LOR
HSC 433 START
LCP 433
HSX1 433 E–STOP
CNV 433
MWH 433 FBCVS
TSH 433 FBCVS

HSA 434 LOR
HSC 434 START
LCP 434
HSX1 434 E–STOP
CNV 434
MWH 434 FBCVS
TSH 434 FBCVS

51N03 51N01 B
8"FAD
51N02 51N03 B

SCREW PRESS NO.1
A 51N01 51N03
DWS

SSL 433 FBCVS
SE 433 FBCVS
HSX2 433 E–STOP FBCVS
4"FAD
PULL CHORD
M

SSL 434 FBCVS
SE 434 FBCVS
HSX2 434 E–STOP FBCVS
4"FAD
PULL CHORD
M

SCREW PRESS NO. 2
DWS
51N02 51N03 A

4" PD
4" PD
CAKE HAULING TRUCK
4" PD

CNV–433 CAKE CONVEYOR NO. 1 B 00N12
CNV–433
CNV–434
CNV–434 CAKE CONVEYOR NO. 2 B 00N12

REV	DATE	BY	DESCRIPTION

DESIGNED PCK
DRAWN AD
CHECKED RAM
DATE SEPT 2013

REGISTERED PROFESSIONAL ENGINEER CARLO A. GROSSO No. 16851 ELECTRICAL STATE OF CALIFORNIA 9/16/2013

carollo

SAN LUIS OBISPO COUNTY

SAN LUIS OBISPO COUNTY
LOS OSOS WATER RECYCLING FACILITY PROJECT
INSTRUMENTATION
CAKE CONVEYORS

VERIFY SCALES
BAR IS ONE INCH ON ORIGINAL DRAWING
0 1"
IF NOT ONE INCH ON THIS SHEET, ADJUST SCALES ACCORDINGLY

JOB NO. 8930A.11
DRAWING NO. 51N03
SHEET NO. 465 OF 549

LAST SAVED BY: broepken

PROJECT NO. 8930A.11 FILE NAME: 8930A1151N003.dwg

SCADA

CONTROL PANEL

PLC I/O

OPERATOR INTERFACE/ CONTROL DEVICES

POWER SOURCE

FIELD

LAH 440 ALARM POLY SPILL

LAL 441 ALARM LEVEL
LR 441 TREND LEVEL
QLL 441 SP LEVEL
LI 441 NUM LEVEL
WI 441 NUM WEIGHT

LAL 442 ALARM LEVEL
LR 442 TREND LEVEL
QLL 442 SP LEVEL
LI 442 NUM LEVEL
WI 442 NUM WEIGHT

LAL 443 ALARM LEVEL
LR 443 TREND LEVEL
QLL 443 SP LEVEL
LI 443 NUM LEVEL
WI 443 NUM WEIGHT

FAH 769A ALARM
FAH 769B ALARM

LSH 440 DI PLC-2
W 441 AI PLC-2
W 442 AI PLC-2
W 443 AI PLC-2
FSH 769A DI PLC-2
FSH 769B DI PLC-2

CB 441 TM 120VAC-1P PCM-2
CB 442 TM 120VAC-1P PCM-2
CB 443 TM 120VAC-1P PCM-2

LSH 440
LE 440
WIT 441
DISC 441
WE 441
WIT 442
DISC 442
WE 442
WIT 443
DISC 443
WE 443
FSH 769A FBV
FE 769A FBV
FSH 769B FBV
FE 769B FBV

2" POL A 51N04 51N05
2" POL D 51N04 51N06
POTABLE WATER C 51N05 51N04 3" W1
1.5" W1
1.5" W1

DEWATERING POLYMER TOTE NO. 1
DEWATERNG POLYMER TOTE NO. 2
SECONDARY TREATMENT POLYMER TOTE

CONTINUED ON DRAWING 51N05

LE-440 LEVEL SWITCH HIGH .5FT NL106 TYP
WE-441 TOTE SCALE 0-4000 LB NA900 TYP
WE-442 TOTE SCALE 0-4000 LB NA900 TYP
WE-443 TOTE SCALE 0-4000 LB NA900 TYP
FE-769A FLOW SWITCH HIGH
FE-769B FLOW SWITCH HIGH

GENERAL NOTES

1. ALL EQUIPMENT AND INSTRUMENT TAGGING ON THIS SHEET SHALL BE PROCEDED WITH FACILITY INDEX NO. 51, WHICH IS NOT SHOWN FOR CLARITY.

REV	DATE	BY	DESCRIPTION

DESIGNED PCK
DRAWN AD
CHECKED RAM
DATE SEPT 2013

REGISTERED PROFESSIONAL ENGINEER CARLO A. GRECO No. 16851 ELECTRICAL STATE OF CALIFORNIA
9/16/2013

carollo

SAN LUIS OBISPO COUNTY

SAN LUIS OBISPO COUNTY
LOS OSOS WATER RECYCLING FACILITY PROJECT
INSTRUMENTATION
POLYMER STORAGE

VERIFY SCALES
BAR IS ONE INCH ON ORIGINAL DRAWING
0 1"
IF NOT ONE INCH ON THIS SHEET, ADJUST SCALES ACCORDINGLY

JOB NO. 8930A.11
DRAWING NO. 51N04
SHEET NO. 466 OF 549

LAST SAVED BY: broepken

PROJECT NO. 8930A.11 FILE NAME: 8930A1151N004.dwg

SCADA

Q1 451 SP DOSE
Q2 451 SP CONC
Q3 451 SP % POLYMER
Q4 451 SP DENSITY
Q5 451 SP QMAX GPH
FAL 451 ALARM LOW FLOW
YR 451 STATUS REMOTE
Y2 451 ALARM FAILED
Y1 451 STATUS RUNNING
PAH 451 ALARM
HAT 451 ACTION SS
SI 451 NUM SPEED
QS 451 SP SPEED

Q1 452 SP DOSE
Q2 452 SP CONC
Q3 452 SP % POLYMER
Q4 452 SP DENSITY
Q5 452 SP QMAX GPH
FAL 452 ALARM LOW FLOW
YR 452 STATUS REMOTE
Y2 452 ALARM FAILED
Y1 452 STATUS RUNNING
PAH 452 ALARM
HAT 452 ACTION SS
SI 452 NUM SPEED
QS 452 SP SPEED

GENERAL NOTES

1. ALL EQUIPMENT AND INSTRUMENT TAGGING ON THIS SHEET SHALL BE PROCEDED WITH FACILITY INDEX NO. 51, WHICH IS NOT SHOWN FOR CLARITY.

CONTROL PANEL
PLC I/O

FSL 451 DI LOW FLOW PLC–2
HSAR 451 DI REMOTE PLC–2
AUX1 451 DI RUNNING PLC–2
AUX2 451 DI FAILED PLC–2
SI 451 AI SPEED IN PLC–2
SS 451 AO SPEED OUT PLC–2
MS 451 DO RUN PLC–2
PSH 451 DI HIGH PRESS PLC–2

FSL 452 DI LOW FLOW PLC–2
HSAR 452 DI REMOTE PLC–2
AUX1 452 DI RUNNING PLC–2
AUX2 452 DI FAILED PLC–2
SI 452 AI SPEED IN PLC–2
SS 452 AO SPEED OUT PLC–2
MS 452 DO RUN PLC–2
PSH 452 DI HIGH PRESS PLC–2

OPERATOR INTERFACE/ CONTROL DEVICES

POWER SOURCE

CB 451 TM 120VAC–1P LP–BF
CB 452 TM 120VAC–1P LP–BF

FIELD

POLYMER STORAGE A 51N04 51N05
2" POL
2" POL
MAN–RESET DPSH
PSH 451
FBPV
PI 451B
PE 451
PBU 451
DEWATERING POLYMER BLEND UNIT NO. 1
PI 451A
2" POL
MAN–RESET DPSH
PSH 452
FBPV
PI 452B
PE 452
PBU 452
DEWATERING POLYMER BLEND UNIT NO. 2
PI 452A
2" POL
NC
SCREW PRESS NO. 1 A 51N05 51N01
SCREW PRESS NO. 2 B 51N05 51N02

PLANT WATER 6" PW 2" PW
NON-POTABLE WATER 3" W2 2" W2
2" W2
POTABLE WATER 1.5" W2 C 51N05 51N04
TO EYE WASH
1" W2 E 51N05 51N06

CONTINUED ON DRAWING 51N04
CONTINUED ON DRAWING 51N06

PI–451B PRESSURE INDICATOR
PE–451 PRESSURE SWITCH HIGH
PBU–451 POLYMER BLEND UNIT NO. 1
PI–451A PRESSURE INDICATOR 0–____PSIG
PI–452B PRESSURE INDICATOR
PE–452 PRESSURE SWITCH HIGH
PBU–452 POLYMER BLEND UNIT NO. 2
PI–452A PRESSURE INDICATOR

REV	DATE	BY	DESCRIPTION

DESIGNED PCK
DRAWN AD
CHECKED RAM
DATE SEPT 2013

REGISTERED PROFESSIONAL ENGINEER CARLO A. GROSSO No. 18851 ELECTRICAL STATE OF CALIFORNIA 9/16/2013

carollo

SAN LUIS OBISPO COUNTY

SAN LUIS OBISPO COUNTY
LOS OSOS WATER RECYCLING FACILITY PROJECT
INSTRUMENTATION
POLYMER BLEND & FEED DEWATERING

VERIFY SCALES
BAR IS ONE INCH ON ORIGINAL DRAWING
0 1"
IF NOT ONE INCH ON THIS SHEET, ADJUST SCALES ACCORDINGLY

JOB NO. 8930A.11
DRAWING NO. 51N05
SHEET NO. 467 OF 549

LAST SAVED BY: broepken

PROJECT NO. 8930A.11 FILE NAME: 8930A1151N005.dwg

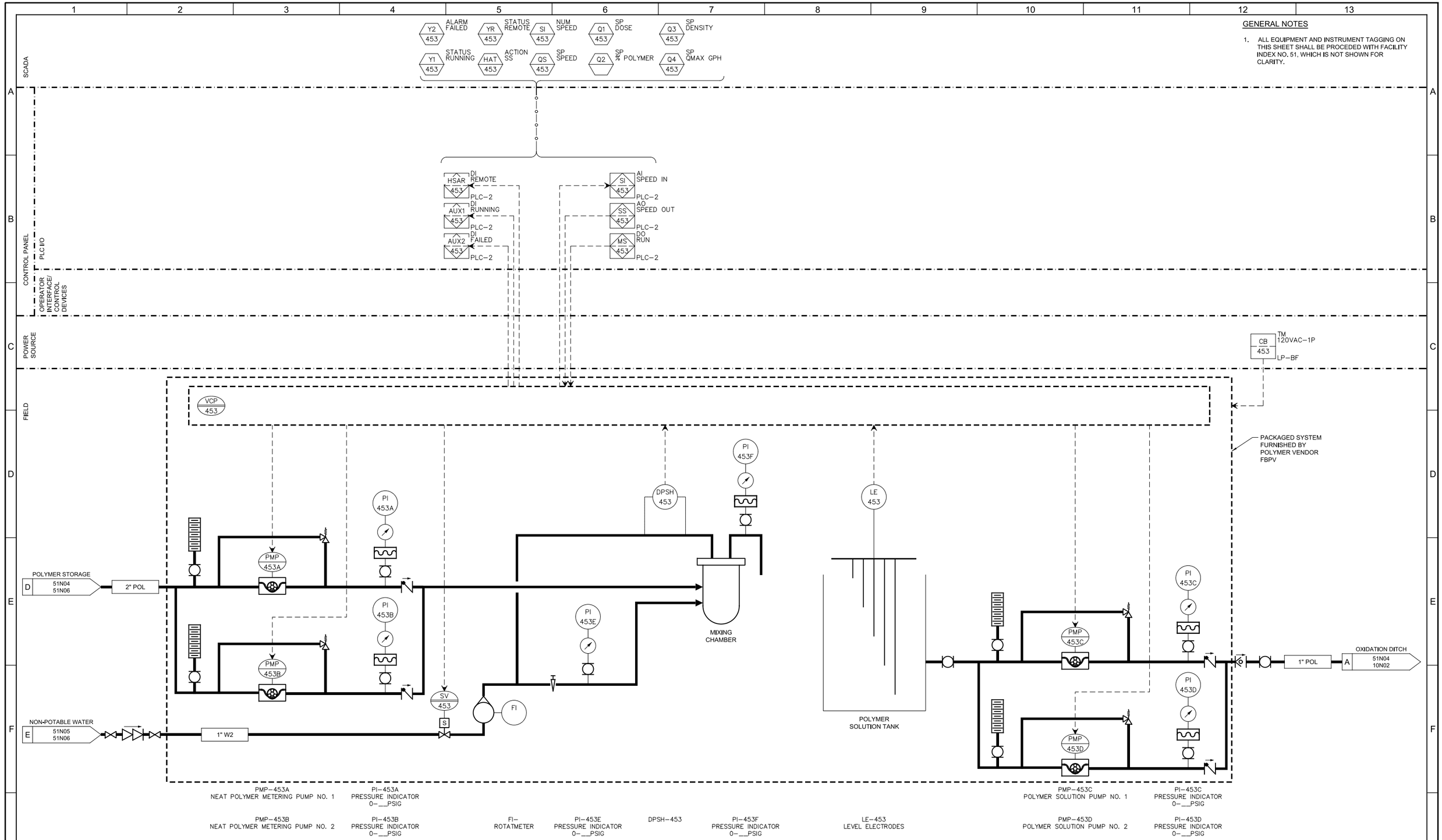

GENERAL NOTES

1. ALL EQUIPMENT AND INSTRUMENT TAGGING ON THIS SHEET SHALL BE PROCEDED WITH FACILITY INDEX NO. 51, WHICH IS NOT SHOWN FOR CLARITY.

REV	DATE	BY	DESCRIPTION

DESIGNED PCK
DRAWN JJB
CHECKED RAM
DATE SEPT 2013

REGISTERED PROFESSIONAL ENGINEER CARLO A. GROSS No. 16851 ELECTRICAL STATE OF CALIFORNIA
9/16/2013

carollo

SAN LUIS OBISPO COUNTY

SAN LUIS OBISPO COUNTY
LOS OSOS WATER RECYCLING FACILITY PROJECT
INSTRUMENTATION
POLYMER BLEND & FEED SECONDARY TREATMENT

VERIFY SCALES
BAR IS ONE INCH ON ORIGINAL DRAWING
0 1"
IF NOT ONE INCH ON THIS SHEET, ADJUST SCALES ACCORDINGLY

JOB NO. 8930A.11
DRAWING NO. 51N06
SHEET NO. 468 OF 549

LAST SAVED BY: broepken

PROJECT NO. 8930A.11 FILE NAME: 8930A1151N006.dwg

GENERAL NOTES

1. ALL EQUIPMENT AND INSTRUMENT TAGGING ON THIS SHEET SHALL BE PRECEDED WITH FACILITY INDEX NO. 51 WHICH IS NOT SHOWN FOR CLARITY.

SCADA

ALARM INTRUSION ZA 002

ALARM 24V PWR SUP FAIL JA1 002

ALARM 24V PWR SUP FAIL JA2 002

ALARM DIODE BRIDGE FAIL JA3 002

ALARM TAH 002

ALARM UPS FAIL XA4 002

ALARM LO BATT. XA3 002

STATUS ON UPS POWER Y1 002

CONTROL PANEL

PLC I/O

DI INTRUSION ZS 002 PLC-2

DI DIODE BRIDGE FAIL JS3 002 PLC-2

DI 24V PWR SUP FAIL JS2 002 PLC-2

DI 24V PWR SUP FAIL JS1 002 PLC-2

DI PLC TEMP TSH 002 PLC-2

DI SMOKE XSH 470 PLC-2

DI RUNNING AUX1 470 PLC-2

DI FAIL AUX2 470 PLC-2

OPERATOR INTERFACE/ CONTROL DEVICES

POWER SOURCE

CB 002 TM 120VAC-1P

CB 470 TM 480VAC-3P MCC-F

FIELD

ZS 002

JS 002

TSH 002

TE 002

UPS 002

PCM-2

VCP 470

XE1 470 SMOKE DETECTOR

FILTER

ACU 470

XE2 470 SMOKE DETECTOR

TIC 470 THERMOSTAT

ZS-002
INTRUSION DR. 1

JS-002
POWER SUPPLY

TE-002
PLC TEMP

UPS-002
UPS POWER STATUS

ACU-470
ELECTRICAL ROOM AIR CONDITIONING UNIT

REV	DATE	BY	DESCRIPTION

DESIGNED CAG
DRAWN AD
CHECKED RAM
DATE SEPT 2013

REGISTERED PROFESSIONAL ENGINEER CARLO A. GRECO No. 18851 ELECTRICAL STATE OF CALIFORNIA 9/16/2013

carollo

SAN LUIS OBISPO COUNTY

SAN LUIS OBISPO COUNTY

LOS OSOS WATER RECYCLING FACILITY PROJECT

INSTRUMENTATION

DEWATERING BUILDING ELECTRICAL ROOM

VERIFY SCALES
BAR IS ONE INCH ON ORIGINAL DRAWING
0 1"
IF NOT ONE INCH ON THIS SHEET, ADJUST SCALES ACCORDINGLY

JOB NO. 8930A.11
DRAWING NO. 51N07
SHEET NO. 469 OF 549

LAST SAVED BY: broepken

PROJECT NO. 8930A.11 FILE NAME: 8930A1151N007.dwg

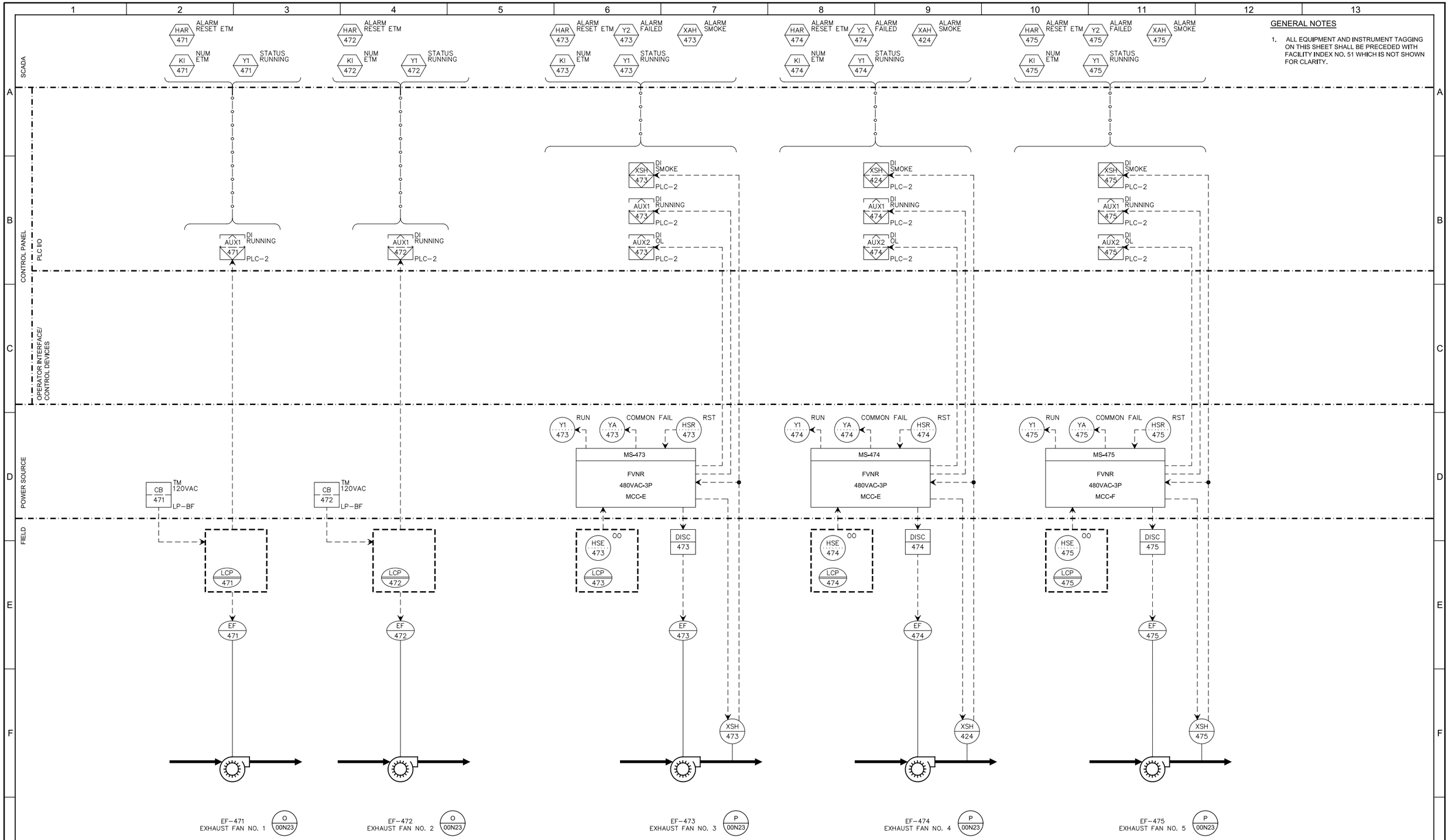

GENERAL NOTES

1. ALL EQUIPMENT AND INSTRUMENT TAGGING ON THIS SHEET SHALL BE PRECEDED WITH FACILITY INDEX NO. 51 WHICH IS NOT SHOWN FOR CLARITY.

REV	DATE	BY	DESCRIPTION

DESIGNED CAG
DRAWN CC
CHECKED RAM
DATE SEPT 2013

REGISTERED PROFESSIONAL ENGINEER CARLO A. GROSS No. 18851 ELECTRICAL STATE OF CALIFORNIA
9/16/2013

carollo

SAN LUIS OBISPO COUNTY

SAN LUIS OBISPO COUNTY
LOS OSOS WATER RECYCLING FACILITY PROJECT
INSTRUMENTATION
DEWATERING BUILDING FANS - 1

VERIFY SCALES
BAR IS ONE INCH ON ORIGINAL DRAWING
0 1"
IF NOT ONE INCH ON THIS SHEET, ADJUST SCALES ACCORDINGLY

JOB NO. 8930A.11
DRAWING NO. 51N08
SHEET NO. 470 OF 549

LAST SAVED BY: broepken

PROJECT NO. 8930A.11 FILE NAME: 8930A1151N008.dwg

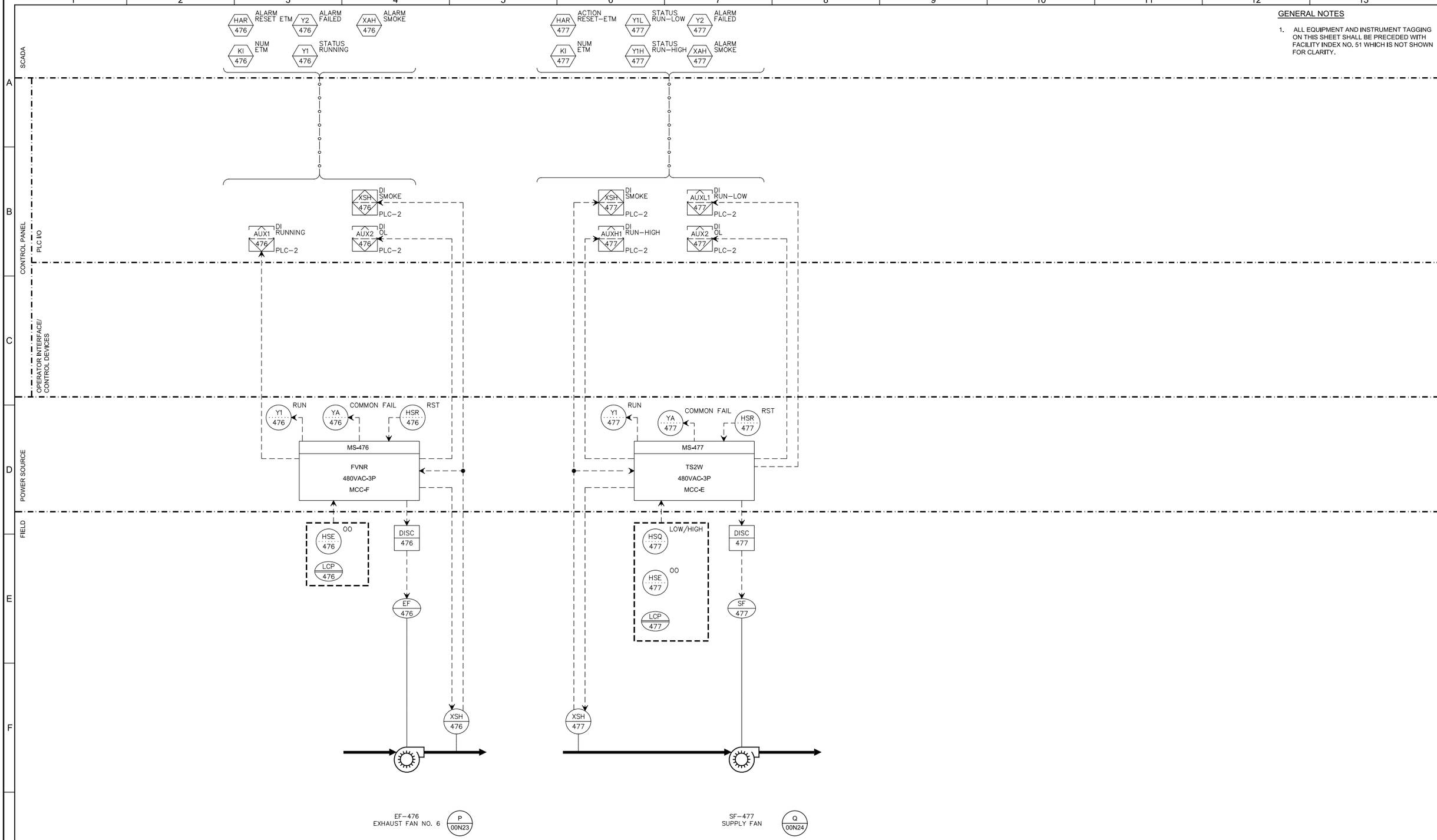

GENERAL NOTES

1. ALL EQUIPMENT AND INSTRUMENT TAGGING ON THIS SHEET SHALL BE PRECEDED WITH FACILITY INDEX NO. 51 WHICH IS NOT SHOWN FOR CLARITY.

REV	DATE	BY	DESCRIPTION

DESIGNED CAG
DRAWN CC
CHECKED RAM
DATE SEPT 2013

REGISTERED PROFESSIONAL ENGINEER CARLO A. GROSSO No. 18851 ELECTRICAL STATE OF CALIFORNIA
9/16/2013

carollo

SAN LUIS OBISPO COUNTY

SAN LUIS OBISPO COUNTY
LOS OSOS WATER RECYCLING FACILITY PROJECT
INSTRUMENTATION
DEWATERING BUILDING FANS - 2

VERIFY SCALES
BAR IS ONE INCH ON ORIGINAL DRAWING
0 1"
IF NOT ONE INCH ON THIS SHEET, ADJUST SCALES ACCORDINGLY

JOB NO. 8930A.11
DRAWING NO. 51N09
SHEET NO. 471 OF 549

LAST SAVED BY: broepken

PROJECT NO. 8930A.11 FILE NAME: 8930A1151N009.dwg

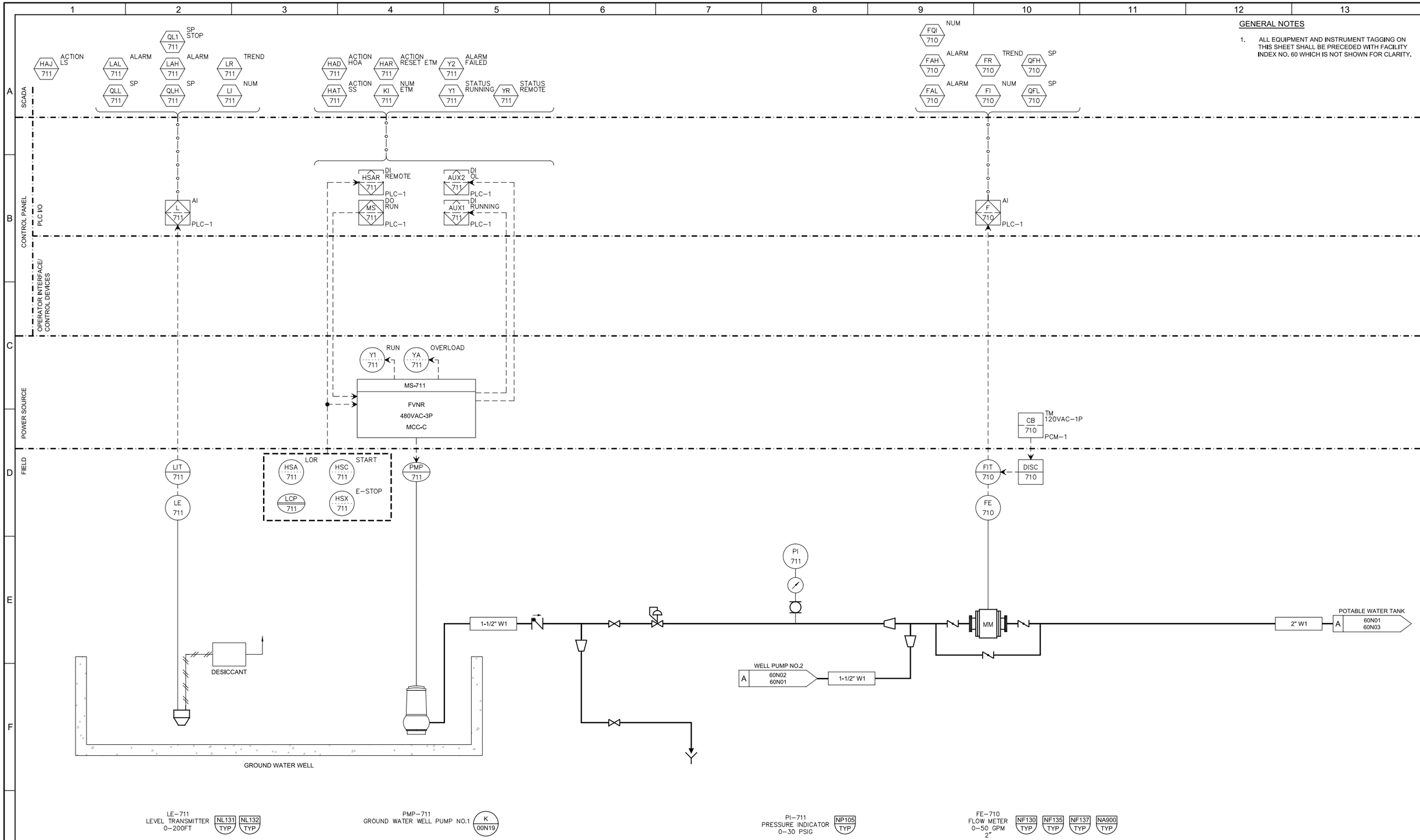

GENERAL NOTES

1. ALL EQUIPMENT AND INSTRUMENT TAGGING ON THIS SHEET SHALL BE PRECEDED WITH FACILITY INDEX NO. 60 WHICH IS NOT SHOWN FOR CLARITY.

REV	DATE	BY	DESCRIPTION

DESIGNED PCK
DRAWN CGR
CHECKED RAM
DATE SEPT 2013

REGISTERED PROFESSIONAL ENGINEER CARLO A. GROSS No. 18851 ELECTRICAL STATE OF CALIFORNIA
9/16/2013

carollo

SAN LUIS OBISPO COUNTY

SAN LUIS OBISPO COUNTY
LOS OSOS WATER RECYCLING FACILITY PROJECT
INSTRUMENTATION
POTABLE WATER - 1

VERIFY SCALES
BAR IS ONE INCH ON ORIGINAL DRAWING
0 1"
IF NOT ONE INCH ON THIS SHEET, ADJUST SCALES ACCORDINGLY

JOB NO. 8930A.11
DRAWING NO. 60N01
SHEET NO. 472 OF 549

LAST SAVED BY: broepken

PROJECT NO. 8930A.11 FILE NAME: 8930A1160N001.dwg

GENERAL NOTES

1. ALL EQUIPMENT AND INSTRUMENT TAGGING ON THIS SHEET SHALL BE PRECEDED WITH FACILITY INDEX NO. 60 WHICH IS NOT SHOWN FOR CLARITY.

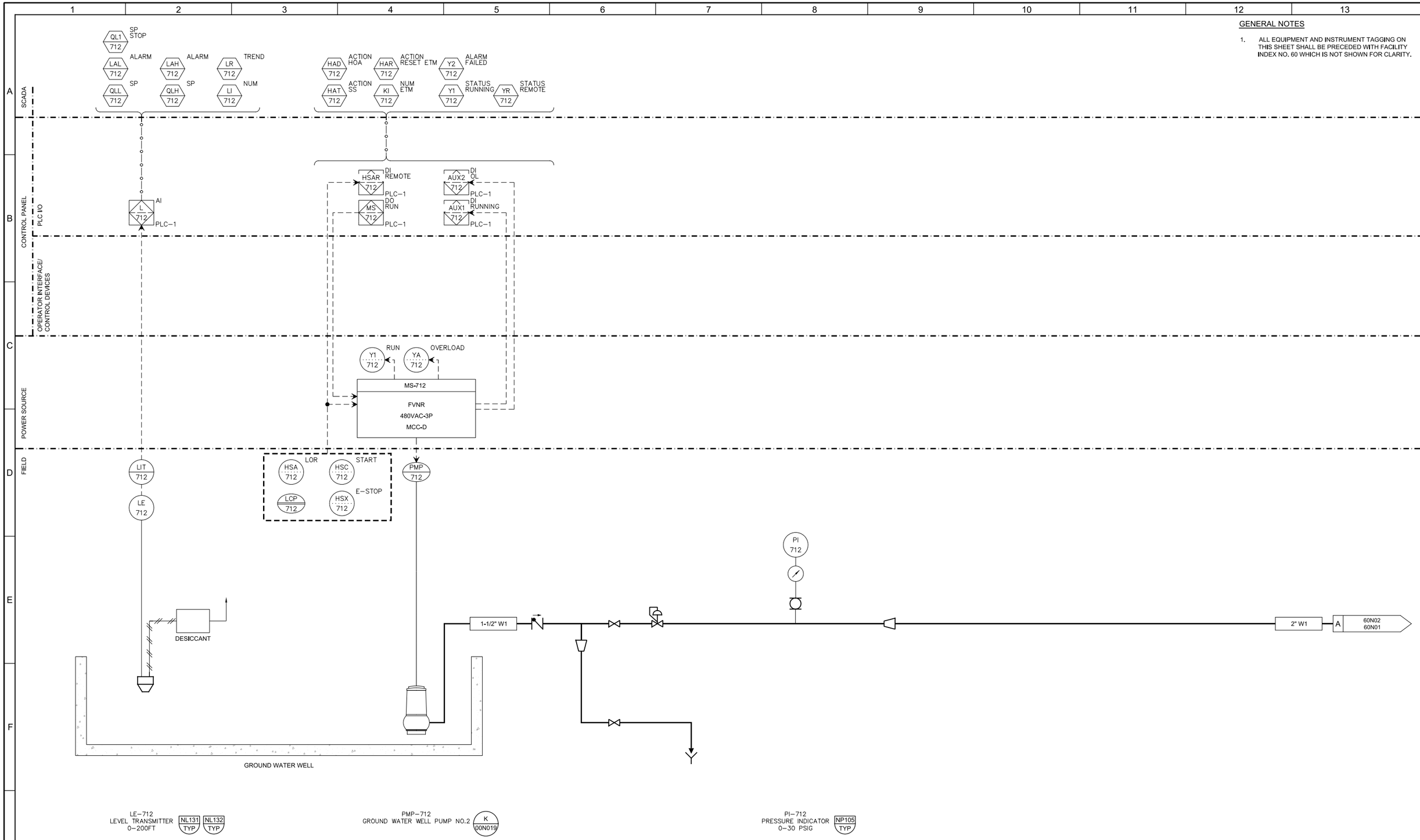

LE-712
LEVEL TRANSMITTER
0-200FT
NL131 TYP
NL132 TYP

PMP-712
GROUND WATER WELL PUMP NO.2
K 00N019

PI-712
PRESSURE INDICATOR
0-30 PSIG
NP105 TYP

REV	DATE	BY	DESCRIPTION

DESIGNED PCK
DRAWN AD
CHECKED RAM
DATE SEPT 2013

REGISTERED PROFESSIONAL ENGINEER CARLO A. GRADY No. 18851 ELECTRICAL STATE OF CALIFORNIA 9/16/2013

carollo

SAN LUIS OBISPO COUNTY

SAN LUIS OBISPO COUNTY

LOS OSOS WATER RECYCLING FACILITY PROJECT

INSTRUMENTATION

POTABLE WATER - 2

VERIFY SCALES
BAR IS ONE INCH ON ORIGINAL DRAWING
0 1"
IF NOT ONE INCH ON THIS SHEET, ADJUST SCALES ACCORDINGLY

JOB NO. 8930A.11
DRAWING NO. 60N02
SHEET NO. 473 OF 549

LAST SAVED BY: broepken

PROJECT NO. 8930A.11 FILE NAME: 8930A1160N002.dwg

SCADA

CONTROL PANEL — PLC I/O

OPERATOR INTERFACE/ CONTROL DEVICES

POWER SOURCE

FIELD

YB 716 STATUS BACKWASH

QAL 713 SP CL · AAL 713 ALARM CL · YOC 713 STATUS OC
AAH 713 ALARM CL · AR 713 TREND CL · HAD 713 ACTION HOA
QAH 713 SP CL · AI 713 NUM CL · HAO 713 ACTION OC

IAL 714 ALARM · QIH 714 SP · IAH 714 ALARM
HAT 714 ACTION SS · HAR 714 ACTION RESET ETM · QIL 714 SP · IR 714 TREND
KI 714 NUM ETM · Y1 714 STATUS RUNNING · II 714 NUM

QLH 715 SP · QLL 715 SP · QL2 715 SP START WELL PUMP
LAL 715 ALARM · LR 715 TREND · QL3 715 SP STOP WELL PUMP
LAH 715 ALARM · LI 715 NUM · QL1 715 SP STOP MIXER

QAL 715 SP CL · AAL 715 ALARM CL
AAH 715 ALARM CL · AR 715 TREND CL
QAH 715 SP CL · AI 715 NUM CL

MSO 713 DO OPEN PLC · MSC 713 DO CLOSE PLC · ZSO 713 DI OPENED PLC · ZSC 713 DI CLOSED PLC

YB 716 DI BACKWASH PLC–1 · A 713 AI CL PLC–1 · MS 714 DO RUN PLC–1 · I 714 AI CURRENT PLC–1 · L 715 AI PLC–1 · A 715 AI CL PLC–1

CB 716 TM 120VAC–1P LP–BD · CB 713B TM 120VAC–1P PCM–1 · CB 713 TM 120VAC–1P LP–BC · CB 714 TM 120VAC–1P LP–BC · CB 715C TM 120VAC–1P PCM–1 · CB 715D TM 120VAC–1P PCM–1

DISC 713B · AIT 713 CL · AE 713 CL · ZSOC 713 · EDR 713 · DISC 713 · VCP 714 · MIX 714 · DISC 715C · LIT 715 · LE 715 · DISC 715D · AIT 715 CL · AE 715 CL

PI 713 · FLT 716 FE/MN FILTER SYSTEM · E/D · VAL 713 · NC

A 60N01 60N03 · 2" W1

NON–POTABLE WATER STORAGE · OVERFLOW · TNK 715 FIRE WATER STORAGE

2" W2 A 60N03 60N04 NON-POTABLE

12"FSW A 60N03 70N01

3" D

2" W1 POTABLE WATER STORAGE A 60N03 60N06

A 60N03 60N05

1/2" SHS POTABLE WATER STORAGE B 60N03 60N06

C 60N03 60N06 POTABLE WATER STORAGE

FI 281E · FI 281F

G 32N05 60N03 SODIUM HYPO · 1/2" SHS

4" PD

STORM DRAIN

FI–281E ROTAMETER 0–5 ml/min
FI–281F ROTAMETER 0–3 GPH
PI–713 PRESSURE INDICATOR 0–30 PSIG NP105 TYP
AE–713 CHLORINE RESIDUAL 0–15 Mg/L NA042 TYP NA090 TYP NA900 TYP
EDR–713 NON–POTABLE WATER STORAGE INLET VALVE
MIX–714 MIXER
LE–715 ULTRASONIC LEVEL METER 0–35 FT NA900 TYP NL170 TYP
AE–715 CHLORINE RESIDUAL 0–15 Mg/L NA042 TYP NA090 TYP NA900 TYP

GENERAL NOTES

1. ALL EQUIPMENT AND INSTRUMENT TAGGING ON THIS SHEET SHALL BE PRECEDED WITH FACILITY INDEX NO. 60, WHICH IS NOT SHOWN FOR CLARITY.

REV	DATE	BY	DESCRIPTION

DESIGNED PCK · DRAWN CGR · CHECKED RAM · DATE SEPT 2013

REGISTERED PROFESSIONAL ENGINEER CARLO A. GROSSINI No. 16851 ELECTRICAL STATE OF CALIFORNIA 9/16/2013

carollo

SAN LUIS OBISPO COUNTY

SAN LUIS OBISPO COUNTY

LOS OSOS WATER RECYCLING FACILITY PROJECT

INSTRUMENTATION

POTABLE WATER - 3

VERIFY SCALES
BAR IS ONE INCH ON ORIGINAL DRAWING
0 1"
IF NOT ONE INCH ON THIS SHEET, ADJUST SCALES ACCORDINGLY

JOB NO. 8930A.11
DRAWING NO. 60N03
SHEET NO. 474 OF 549

LAST SAVED BY: broepken

PROJECT NO. 8930A.11 FILE NAME: 8930A1160N003.dwg

GENERAL NOTES

1. ALL EQUIPMENT AND INSTRUMENT TAGGING ON THIS SHEET SHALL BE PRECEDED WITH FACILITY INDEX NO. 60, WHICH IS NOT SHOWN FOR CLARITY.

SCADA

YR 731 STATUS REMOTE
Y2 731 ALARM FAILED
Y1 731 STATUS RUNNING
TAH 731 ALARM
HAR 731 ACTION RESET ETM
KI 731 NUM ETM
HAD 731 ACTION HOA
HAT 731 ACTION SS

YR 732 STATUS REMOTE
Y2 732 ALARM FAILED
Y1 732 STATUS RUNNING
TAH 732 ALARM
HAR 732 ACTION RESET ETM
KI 732 NUM ETM
HAD 732 ACTION HOA
HAT 732 ACTION SS

YR 733 STATUS REMOTE
Y2 733 ALARM FAILED
Y1 733 STATUS RUNNING
TAH 733 ALARM
HAR 733 ACTION RESET ETM
KI 733 NUM ETM
HAD 733 ACTION HOA
HAT 733 ACTION SS

CONTROL PANEL / PLC I/O

HSAR 731 DI REMOTE PLC-1
MS 731 DO RUN PLC-1
TSH 731 DI PLC-1
AUX2 731 DI OL PLC-1
AUX1 731 DI RUNNING PLC-1
PAH 731 ALARM
PSH 731 DI PLC-1

HSAR 732 DI REMOTE PLC-1
MS 732 DO RUN PLC-1
TSH 732 DI PLC-1
AUX2 732 DI OL PLC-1
AUX1 732 DI RUNNING PLC-1
PAH 732 ALARM
PSH 732 DI PLC-1

HSAR 733 DI REMOTE PLC-1
MS 733 DO RUN PLC-1
TSH 733 DI PLC-1
AUX2 733 DI OL PLC-1
AUX1 733 DI RUNNING PLC-1
PAH 733 ALARM
PSH 733 DI PLC-1

POWER SOURCE

MS-731 FVNR 480VAC-3P MCC-C
MS-732 FVNR 480VAC-3P MCC-D
MS-733 FVNR 480VAC-3P MCC-C

FIELD

HSA 731 LOR
HSC 731 START
LCP 731
HSX 731 E-STOP
PMP 731
MWH 731
TSH 731
PSH 731 FBPS
PI 731B FBPS
PE 731 FBPS
PI 731A FBPS

HSA 732 LOR
HSC 732 START
LCP 732
HSX 732 E-STOP
PMP 732
MWH 732
TSH 732
PSH 732 FBPS
PI 732B FBPS
PE 732 FBPS
PI 732A FBPS

HSA 733 LOR
HSC 733 START
LCP 733
HSX 733 E-STOP
PMP 733
MWH 733
TSH 733
PSH 733 FBPS
PI 733B FBPS
PE 733 FBPS
PI 733A FBPS

A 60N03 60N04 — 2" W2

NON-POTABLE WATER DISTRIBUTION
2" W2 — 2" W2 — A 60N04 60N05

PI-732A PRESSURE INDICATOR
PI-731A PRESSURE INDICATOR
PI-733A PRESSURE INDICATOR
PI-731B PRESSURE INDICATOR
PE-731 PRESSURE SWITCH HIGH
PI-732B PRESSURE INDICATOR
PE-732 PRESSURE SWITCH HIGH
PI-733B PRESSURE INDICATOR
PE-733 PRESSURE SWITCH HIGH

PMP-731 NON-POTABLE WATER PRESSURIZATION PUMP NO. 1 — H 00N16
PMP-732 NON-POTABLE WATER PRESSURIZATION PUMP NO. 2 — H 00N16
PMP-733 NON-POTABLE WATER PRESSURIZATION PUMP NO. 3 — H 00N16

REV	DATE	BY	DESCRIPTION

DESIGNED PCK
DRAWN CGR
CHECKED RAM
DATE SEPT 2013

REGISTERED PROFESSIONAL ENGINEER CARLO A. GRECO No. 18851 ELECTRICAL STATE OF CALIFORNIA 9/16/2013

carollo

SAN LUIS OBISPO COUNTY

SAN LUIS OBISPO COUNTY
LOS OSOS WATER RECYCLING FACILITY PROJECT
INSTRUMENTATION
NON-POTABLE WATER - 1

VERIFY SCALES
BAR IS ONE INCH ON ORIGINAL DRAWING
0 1"
IF NOT ONE INCH ON THIS SHEET, ADJUST SCALES ACCORDINGLY

JOB NO. 8930A.11
DRAWING NO. 60N04
SHEET NO. 475 OF 549

LAST SAVED BY: broepken

PROJECT NO. 8930A.11 FILE NAME: 8930A1160N004.dwg

SCADA

CONTROL PANEL — PLC I/O

OPERATOR INTERFACE/ CONTROL DEVICES

POWER SOURCE

FIELD

FAH 734 — ALARM
FR 734 — TREND
QFH 734 — SP
FAL 734 — ALARM
FI 734 — NUM
QFL 734 — SP

QP2 734 — SP
START LAG
QP1 734 — SP
QPH 734 — SP
START LEAD
PAH 734 — ALARM
PR 734 — TREND
PAL 734 — ALARM
PI 734 — NUM
QPL 734 — SP
QP3 734 — SP
STOP

F 734 — AI — PLC–1

P 734 — AI — PLC–1

CB 734 — TM 120VAC–1P — PCM–1

FIT 734 — DISC 734

FE 734

PIT 734

PI 734

PE 734

A 60N04 60N05 — 2" W2 — MM

2" W2

2" W2

NC

A 60N03 60N05 — 1/2"SHS

PI 735 — FBHPTS

NITROGEN FILL

HYDRO PNEUMATIC TANK
TNK 735

3" W2

NON-POTABLE WATER LOOP

TO ODOR CONTROL FACILITY

TO DEWATERING BUILDING

GENERAL NOTES

1. ALL EQUIPMENT AND INSTRUMENT TAGGING ON THIS SHEET SHALL BE PRECEDED WITH FACILITY INDEX NO. 60, WHICH IS NOT SHOWN FOR CLARITY.

FE–734
FLOW METER
0–70 GPM
2"

NA900 TYP | NF130 TYP | NF135 TYP | NF137 TYP

PI–734
PRESSURE INDICATOR
0–160 PSIG

PE–734
PRESS INDICATING TRANSMITTER
0–120 PSIG

NP504 TYP

PI–735
PRESSURE INDICATOR

REV	DATE	BY	DESCRIPTION

DESIGNED PCK
DRAWN CGR
CHECKED RAM
DATE SEPT 2013

REGISTERED PROFESSIONAL ENGINEER — CARLO A. GRING — No. 15851 — ELECTRICAL — STATE OF CALIFORNIA — 9/16/2013

carollo

SAN LUIS OBISPO COUNTY

SAN LUIS OBISPO COUNTY

LOS OSOS WATER RECYCLING FACILITY PROJECT

INSTRUMENTATION

NON-POTABLE WATER - 2

VERIFY SCALES
BAR IS ONE INCH ON ORIGINAL DRAWING
0 — 1"
IF NOT ONE INCH ON THIS SHEET, ADJUST SCALES ACCORDINGLY

JOB NO. 8930A.11
DRAWING NO. 60N05
SHEET NO. 476 OF 549

LAST SAVED BY: broepken

PROJECT NO. 8930A.11 FILE NAME: 8930A1160N005.dwg

SCADA

CONTROL PANEL — PLC I/O

CONTROL PANEL — OPERATOR INTERFACE/ CONTROL DEVICES

POWER SOURCE

FIELD

YOC 760 STATUS OC

HAD 760 ACTION HOA

HAO 760 ACTION OC

QLH 760 SP

LAL 760 ALARM

LAH 760 ALARM

QLL 760 SP

LR 760 TREND

LI 760 NUM

QL2 760 SP START WELL PUMP

QL3 760 SP STOP WELL PUMP

QL1 760 SP STOP MIXER

MSO 760 DO OPEN PLC

MSC 760 DO CLOSE PLC

ZSO 760 DI OPENED PLC

ZSC 760 DI CLOSED PLC

L 760 AI PLC–1

CB 760 TM 120VAC–1P LP–BC

CB 760C TM 120VAC–1P PCM–1

ZSOC 760

EDR 760

DISC 760

DISC 760C

LIT 760

LE 760

OVERFLOW

NON–POTABLE WATER STORAGE

TNK 760

NC

VAL 760

A 60N03 60N06 — 2" W1

2" W1 — A 60N06 60N07 NON-POTABLE

3" D — C 60N06 60N03

B 60N03 60N06 — A 60N06 60N08

EDR–760
POTABLE WATER STORAGE INLET VALVE

LE–760
ULTRASONIC LEVEL METER
0–6 FT

NA900 TYP

NL170 TYP

GENERAL NOTES

1. ALL EQUIPMENT AND INSTRUMENT TAGGING ON THIS SHEET SHALL BE PRECEDED WITH FACILITY INDEX NO. 60, WHICH IS NOT SHOWN FOR CLARITY.

REV	DATE	BY	DESCRIPTION

DESIGNED PCK
DRAWN BPR
CHECKED DLM
DATE SEPT 2013

REGISTERED PROFESSIONAL ENGINEER CARLO A. GROSSINI No. 16851 ELECTRICAL STATE OF CALIFORNIA 9/16/2013

carollo

SAN LUIS OBISPO COUNTY

SAN LUIS OBISPO COUNTY

LOS OSOS WATER RECYCLING FACILITY PROJECT

INSTRUMENTATION

POTABLE WATER - 4

VERIFY SCALES
BAR IS ONE INCH ON ORIGINAL DRAWING
0 1"
IF NOT ONE INCH ON THIS SHEET, ADJUST SCALES ACCORDINGLY

JOB NO. 8930A.11

DRAWING NO. 60N06

SHEET NO. 477 OF 549

LAST SAVED BY: broepken

PROJECT NO. 8930A.11 FILE NAME: 8930A1160N006.dwg

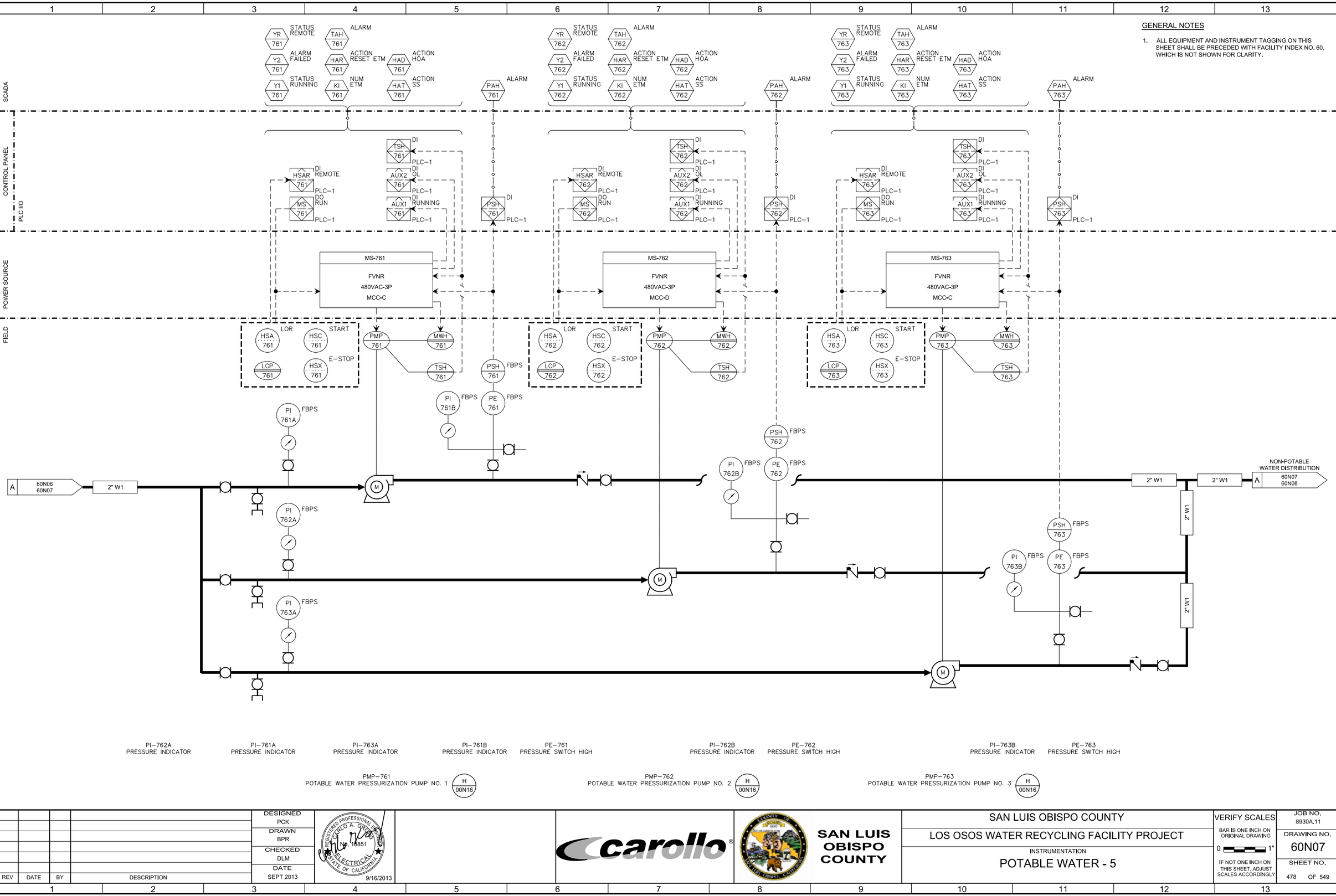

GENERAL NOTES

1. ALL EQUIPMENT AND INSTRUMENT TAGGING ON THIS SHEET SHALL BE PRECEDED WITH FACILITY INDEX NO. 60, WHICH IS NOT SHOWN FOR CLARITY.

REV	DATE	BY	DESCRIPTION

DESIGNED PCK
DRAWN BPR
CHECKED DLM
DATE SEPT 2013

REGISTERED PROFESSIONAL ENGINEER CARLO A. GRECO No. 18851 ELECTRICAL STATE OF CALIFORNIA 9/16/2013

carollo

SAN LUIS OBISPO COUNTY

SAN LUIS OBISPO COUNTY

LOS OSOS WATER RECYCLING FACILITY PROJECT

INSTRUMENTATION

POTABLE WATER - 5

VERIFY SCALES
BAR IS ONE INCH ON ORIGINAL DRAWING
0 1"
IF NOT ONE INCH ON THIS SHEET, ADJUST SCALES ACCORDINGLY

JOB NO. 8930A.11
DRAWING NO. 60N07
SHEET NO. 478 OF 549

LAST SAVED BY: broepken

PROJECT NO. 8930A.11 FILE NAME: 8930A1160N007.dwg

SCADA

CONTROL PANEL

PLC I/O

OPERATOR INTERFACE/
CONTROL DEVICES

POWER SOURCE

FIELD

FAH 764 ALARM
FR 764 TREND
QFH 764 SP
FAL 764 ALARM
FI 764 NUM
QFL 764 SP

QP2 764 SP
QP1 764 SP
START LAG
START LEAD
PAH 764 ALARM
QPH 764 SP
PR 764 TREND
PI 764 NUM
PAL 764 ALARM
QPL 764 SP
QP3 764 SP
STOP

F 764 AI
PLC–1

P 764 AI
PLC–1

CB 764
TM
120VAC–1P
PCM–1

FIT 764
DISC 764
FE 764

PIT 764
PE 764
PI 764

A 60N04 60N05
2" W1
MM
1.5" W1
2" W1
2" W1

A 60N03 60N05
1/2"SHS
NC

PI 765 FBHPTS
NITROGEN FILL
HYDRO PNEUMATIC TANK
TNK 765

2" W1
POTABLE WATER LOOP
TO ELECTRICAL BUILDING
TO ADMIN BUILDING
TO MAINTENANCE BUILDING
TO HEADWORKS/SEPTAGE RECIEVING & OXIDATION DITCH
TO UV FACILITY, CHEMICAL FACILITY AND SECONDARY CLARIFIERS

GENERAL NOTES

1. ALL EQUIPMENT AND INSTRUMENT TAGGING ON THIS SHEET SHALL BE PRECEDED WITH FACILITY INDEX NO. 60, WHICH IS NOT SHOWN FOR CLARITY.

FE–764
FLOW METER
0–40 GPM
1.5"
NA900 TYP
NF130 TYP
NF135 TYP
NF137 TYP

PI–764
PRESSURE INDICATOR
0–160 PSIG

PE–764
PRESS INDICATING TRANSMITTER
0–120 PSIG
NP504 TYP

PI–765
PRESSURE INDICATOR

REV	DATE	BY	DESCRIPTION

DESIGNED PCK
DRAWN BPR
CHECKED DLM
DATE SEPT 2013

REGISTERED PROFESSIONAL ENGINEER
CARLO A. GIRO
No. 15851
ELECTRICAL
STATE OF CALIFORNIA
9/16/2013

carollo

SAN LUIS OBISPO COUNTY

SAN LUIS OBISPO COUNTY
LOS OSOS WATER RECYCLING FACILITY PROJECT
INSTRUMENTATION
POTABLE WATER - 6

VERIFY SCALES
BAR IS ONE INCH ON ORIGINAL DRAWING
0 1"
IF NOT ONE INCH ON THIS SHEET, ADJUST SCALES ACCORDINGLY

JOB NO. 8930A.11
DRAWING NO. 60N08
SHEET NO. 479 OF 549

LAST SAVED BY: broepken

PROJECT NO. 8930A.11 FILE NAME: 8930A1160N008.dwg

SCADA

CONTROL PANEL

PLC I/O

OPERATOR INTERFACE/ CONTROL DEVICES

POWER SOURCE

FIELD

IA1 720 ALARM PHASE LOSS

IA2 720 ALARM PHASE REVERSAL

Y1 720 STATUS RUNNING

Y2 720 STATUS FAILED

YSN 720 STATUS TRANSFER SWITCH NORMAL

YSE 720 STATUS TRANSFER SWITCH EMERGENCY

Y1 721 STATUS RUNNING

Y2 721 STATUS FAILED

FQI 720 NUM

FAH 720 ALARM

FR 720 TREND

QFH 720 SP

FAL 720 ALARM

FI 720 NUM

QFL 720 SP

IS1 720 DI PHASE LOSS PLC–1

IS2 720 DI PHASE REVERSAL PLC–1

AUX2 720 DI FAILED PLC–1

AUX1 720 DI RUNNING PLC–1

ZSN 720 DI TRANSFER SWITCH NORMAL PLC–1

ZSE 720 DI TRANSFER SWITCH EMERGENCY PLC–1

AUX1 721 DI RUNNING PLC–1

AUX2 721 DI FAILED PLC–1

F 720 AI PLC–1

FROM PG&E

CB 721 TM 480VAC–3P MCC–C

CB 720 TM 120VAC–1P PCM–1

DISC 720 TM 120VAC–1P

VCP 720

PE 720

VCP 721

PE 722

FIT 720

FE 720

PMP 720

PI 720A

PI 720B

FI 720

PMP 721

A 60N03 70N01

12" FSW

M

MM

8" FSW

FIRE SYSTEM LOOP

PACKAGED SYSTEM (FBFPS)

PI–720A PRESSURE INDICATOR

PMP–720 FIRE WATER PUMP

PE–720 PRESSURE TRANSMITTER

PI–720B PRESSURE INDICATOR

PMP–721 JOCKEY PUMP

PE–722 PRESSURE TRANSMITTER

FE–720 FLOW METER 0–1150 GPM 8" NA900 TYP NF130 TYP NF136 TYP NF137 TYP

GENERAL NOTES

1. ALL EQUIPMENT AND INSTRUMENT TAGGING ON THIS SHEET SHALL BE PRECEDED WITH FACILITY INDEX NO. 70, WHICH IS NOT SHOWN FOR CLARITY.

REV	DATE	BY	DESCRIPTION

DESIGNED CAG
DRAWN CGR
CHECKED RAM
DATE SEPT 2013

REGISTERED PROFESSIONAL ENGINEER CARLO A. GROSS No. 16851 ELECTRICAL STATE OF CALIFORNIA 9/16/2013

carollo

COUNTY OF SAN LUIS OBISPO

SAN LUIS OBISPO COUNTY

SAN LUIS OBISPO COUNTY

LOS OSOS WATER RECYCLING FACILITY PROJECT

INSTRUMENTATION

FIRE WATER PUMP

VERIFY SCALES

BAR IS ONE INCH ON ORIGINAL DRAWING

0 1"

IF NOT ONE INCH ON THIS SHEET, ADJUST SCALES ACCORDINGLY

JOB NO. 8930A.11

DRAWING NO. 70N01

SHEET NO. 480 OF 549

LAST SAVED BY: broepken

PROJECT NO. 8930A.11 FILE NAME: 8930A1170N001.dwg

SCADA

ZA 001 ALARM INTRUSION

JA2 001 ALARM 24V PWR SUP FAIL

JA1 001 ALARM 24V PWR SUP FAIL

JA3 001 ALARM DIODE BRIDGE FAIL

TAH 001 ALARM

XA4 001 ALARM UPS FAIL

XA3 001 ALARM LO BATT.

Y1 001 STATUS ON UPS POWER

EIA 802 NUM VOLTS PHASE AB

ERA 802 TREND VOLTS PHASE AB

EIB 802 NUM VOLTS PHASE BC

ERB 802 TREND VOLTS PHASE BC

EIC 802 NUM VOLTS PHASE CA

ERC 802 TREND VOLTS PHASE CA

IIA 802 NUM AMPS PHASE A

IRA 802 TREND AMPS PHASE A

IIB 802 NUM AMPS PHASEB

IRB 802 TREND AMPS PHASE B

IIC 802 NUM AMPS PHASEC

IRC 802 TREND AMPS PHASE C

JI1 802 NUM KW 3 PH

JR1 802 TREND KW 3 PH

JI2 802 NUM KVAR 3 PH

JR2 802 TREND KVAR 3 PH

JI3 802 NUM KVA 3 PH

JR3 802 TREND KVA 3 PH

ZSE 802 STATUS EMERGENCY

EAL1 802 ALARM POWER FAIL

ZSA 802 STATUS AUTO

ZST 802 STATUS TEST

ZSN 802 STATUS NORMAL

GENERAL NOTES

1. ALL EQUIPMENT AND INSTRUMENT TAGGING ON THIS SHEET SHALL BE PRECEDED WITH FACILITY INDEX NO. 70 WHICH IS NOT SHOWN FOR CLARITY.

KEY NOTES

1. PROVIDE AND CONFIGURE ALL METERING, PROTOCOL CONVERSION, AND NETWORKING HARDWARE AND SOFTWARE AS REQUIRED TO DISPLAY AND RECORD ALL THE POINTS SHOWN ON THIS DRAWING AT SCADA, FOR THE POWER METER.

CONTROL PANEL

PLC I/O

ZS 001 DI INTRUSION PLC–1

JS3 001 DI DIODE BRIDGE FAIL PLC–1

JS2 001 DI 24V PWR SUP FAIL PLC–1

JS1 001 DI 24V PWR SUP FAIL PLC–1

TSH 001 DI PLC TEMP PLC–1

ZSN 802 DI NORMAL PLC–1

ESL 802 DI PWR FAIL PLC–1

ZSE 802 DI EMERGENCY PLC–1

ZSA 802 DI AUTO PLC–1

ZST 802 DI TEST PLC–1

OPERATOR INTERFACE/ CONTROL DEVICES

POWER SOURCE

CB 001 TM 120VAC–1P

FIELD

ZS 001

JS 001

TSH 001

TE 001

UPS 001

SSM 802 1

ENGINE START → TO VCP-805 DWG 70N04

POWER FAIL → TO VCP-805 DWG 70N04

PCM-1

SWGR-MS

ZS–001 INTRUSION DR. 1

JS–001 POWER SUPPLY

TE–001 PLC TEMP

UPS–001 UPS POWER STATUS

SSM–802

REV	DATE	BY	DESCRIPTION

DESIGNED CAG
DRAWN AD
CHECKED RAM
DATE SEPT 2013

REGISTERED PROFESSIONAL ENGINEER CARLO A. GRECO No. 18851 ELECTRICAL STATE OF CALIFORNIA 9/16/2013

carollo

SAN LUIS OBISPO COUNTY

SAN LUIS OBISPO COUNTY

LOS OSOS WATER RECYCLING FACILITY PROJECT

INSTRUMENTATION

ELECTRICAL BUILDING

VERIFY SCALES
BAR IS ONE INCH ON ORIGINAL DRAWING
0 1"
IF NOT ONE INCH ON THIS SHEET, ADJUST SCALES ACCORDINGLY

JOB NO. 8930A.11
DRAWING NO. 70N02
SHEET NO. 481 OF 549

LAST SAVED BY: broepken

PROJECT NO. 8930A.11 FILE NAME: 8930A1170N002.dwg

SCADA

HAR 801 — ACTION RESET ETM
KI 801 — NUM ETM
Y1 801 — STATUS RUNNING

HAR 802 — ACTION RESET ETM
KI 802 — NUM ETM
Y1 802 — STATUS RUNNING

HAR 721 — ACTION RESET ETM
KI 721 — NUM ETM
Y1 721 — STATUS RUNNING

XAH 800 — ALARM SMOKE
Y1 800 — STATUS RUNNING
Y2 800 — ALARM FAIL

CONTROL PANEL

AUX1 801 — DI RUNNING — PLC–1
AUX1 802 — DI RUNNING — PLC–1
AUX1 721 — DI RUNNING — PLC–1
XSH 800 — DI SMOKE — PLC–1
AUX1 800 — DI RUNNING — PLC–1
AUX2 800 — DI FAIL — PLC–1

OPERATOR INTERFACE/ CONTROL DEVICES

POWER SOURCE

CB 801 — TM 120VAC–1P — LP–BC
CB 802 — TM 120VAC–1P — LP–BC
CB 721 — TM 120VAC–1P — LP–BC
CB 800 — TM 480VAC–3P — MCC–D

FIELD

LCP 801
TSH 801 — FBV
70–EF 801

LCP 802
TSH 802 — FBV
70–EF 802

LCP 721
TSH 721 — FBV
70–EF 721

VCP 800
XE1 800 — SMOKE DETECTOR
FILTER
ACU 800
XE2 800 — SMOKE DETECTOR
TIC 800 — THERMOSTAT

70–EF–801
GENERATOR ROOM EXHAUST FAN NO. 1
R 00N23

70–EF–802
GENERATOR ROOM EXHAUST FAN NO. 2
R 00N23

70–EF–721
FIRE PUMP ROOM EXHAUST FAN
R 00N23

ACU–800
ELECTRICAL ROOM AIR CONDITIONING UNIT

GENERAL NOTES

1. ALL EQUIPMENT AND INSTRUMENT TAGGING ON THIS SHEET SHALL BE PRECEDED WITH FACILITY INDEX NO. 70 WHICH IS NOT SHOWN FOR CLARITY.

REV	DATE	BY	DESCRIPTION

DESIGNED CAG
DRAWN CC
CHECKED RAM
DATE SEPT 2013

REGISTERED PROFESSIONAL ENGINEER — CARLO A. CAROLLO — No. 18851 — ELECTRICAL — STATE OF CALIFORNIA
9/16/2013

carollo

SAN LUIS OBISPO COUNTY

SAN LUIS OBISPO COUNTY
LOS OSOS WATER RECYCLING FACILITY PROJECT
INSTRUMENTATION
ELECTRICAL BUILDING HVAC

VERIFY SCALES
BAR IS ONE INCH ON ORIGINAL DRAWING
0 1"
IF NOT ONE INCH ON THIS SHEET, ADJUST SCALES ACCORDINGLY

JOB NO. 8930A.11
DRAWING NO. 70N03
SHEET NO. 482 OF 549

LAST SAVED BY: broepken

PROJECT NO. 8930A.11 FILE NAME: 8930A1170N003.dwg

SCADA

ALARM FUEL LEVEL LAL 803
ALARM INTERSTITIAL LEAK XAH 803
NUM FUEL LEVEL LI 803
ALARM PIPE LEAK SUMP LAH 803
ALARM FUEL LEVEL LAH 804
ALARM FUEL LEVEL LAL 804
ALARM RUPTURE XAH 804
STATUS GEN RUNNING Y1 805
ALARM GEN FAIL Y2 805
NUM KW JI1 805
NUM KW AVAIL JI2 805
NUM FREQ SI 805
STATUS COMM ZA 805
ALARM HIGH FREQ SAH 805
ALARM LOW FREQ SAL 805
ALARM SPD FAIL Y3 805
ALARM LOAD JAH 805
ALARM GROUD FAULT XAH 805
NUM ETM KI 805
STATUS LOAD BANK RUNNING Y1A 805
STATUS LOAD BANK FAILED Y2A 805

GENERAL NOTES

1. ALL EQUIPMENT AND INSTRUMENT TAGGING ON THIS SHEET SHALL BE PRECEDED WITH FACILITY INDEX NO. 70 WHICH IS NOT SHOWN FOR CLARITY.

CONTROL PANEL

OPERATOR INTERFACE/ CONTROL DEVICES

DI INTERSTITIAL LEAK XSH 803 PLC
AI FUEL LEVEL L 803 PLC
DI FUEL LEVEL LSL 804 PLC
DI FUEL LEVEL LSH 804 PLC
DI RUPTURE XSH 804 PLC

POWER SOURCE

CB 803 TM 120VAC–1P LP–BC
CB 804 TM 120VAC–1P LP–BC
CB 805 TM 208VAC–1P LP–BC

FIELD

HIGH LEVEL
VCP 803
VCP 804
FROM DWG 70N02
FROM DWG 70N02
VCP 805
RUNNING
FAILED
LOAD DUMP
LOAD BANK

INTERSTITIAL LEAK LSH 803
FUEL LEVEL SENSOR LE 803

TNK 803
FOR
FOS
DAY TANK TNK 804
FOR
FOS
GEN 805

TNK–803
DIESEL FUEL STORAGE TANK

GEN–805
STANDBY GENERATOR

REV	DATE	BY	DESCRIPTION

DESIGNED CAG
DRAWN CC
CHECKED RAM
DATE SEPT 2013

REGISTERED PROFESSIONAL ENGINEER CARLO A. GROSSO No. 18851 ELECTRICAL STATE OF CALIFORNIA 9/16/2013

carollo

SAN LUIS OBISPO COUNTY

SAN LUIS OBISPO COUNTY
LOS OSOS WATER RECYCLING FACILITY PROJECT
INSTRUMENTATION
STANDBY GENERATOR

VERIFY SCALES
BAR IS ONE INCH ON ORIGINAL DRAWING
0 1"
IF NOT ONE INCH ON THIS SHEET, ADJUST SCALES ACCORDINGLY

JOB NO. 8930A.11
DRAWING NO. 70N04
SHEET NO. 483 OF 549

LAST SAVED BY: broepken

PROJECT NO. 8930A.11 FILE NAME: 8930A1170N004.dwg