Appendix A Storm Drain Replacement Project Details

Appendix A Storm Drain Project Details

ROAD NO.	JOB NO.	SHEET NO.	TOTAL SHEETS
		1	1

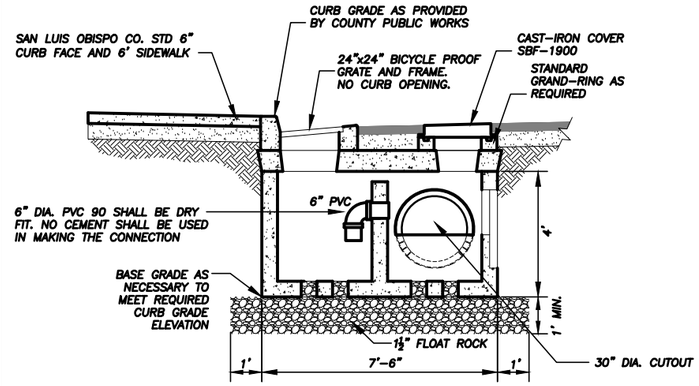

30" DIA. CUTOUT SHOWN ON SIDE WALL AND END WALL FOR REFERENCE ONLY

SECTION

CONCEPT 1

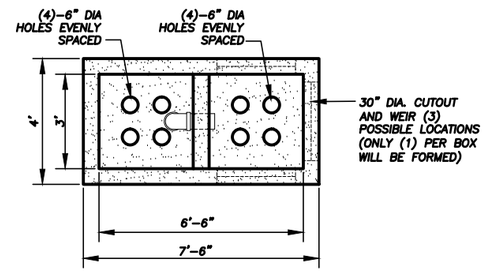

PLAN VIEW WITHOUT LID

NOTE:
CONCRETE BOX BASE SECTION, TRAFFIC RATED TOP SLAB, GRADE RINGS, CURB TOP, GRATE, FRAME AND COVER SHALL BE "MID-STATE CONCRETE PRODUCTS" SLO COUNTY STANDARD OR APPROVED EQUAL. BOX BASE SECTION SHALL BE 4'0"x4'0"x7'6" OR AS APPROVED BY THE ENGINEER.

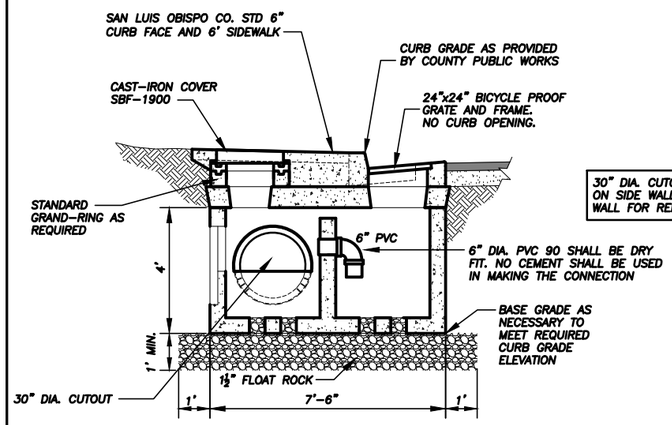

30" DIA. CUTOUT SHOWN ON SIDE WALL AND END WALL FOR REFERENCE ONLY

SECTION

CONCEPT 2

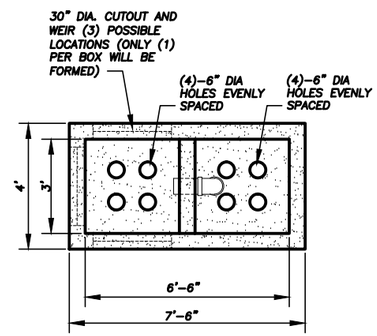

PLAN VIEW WITHOUT LID

NOTE:
CONCRETE BOX BASE SECTION, TRAFFIC RATED TOP SLAB, GRADE RINGS, CURB TOP, GRATE, FRAME AND COVER SHALL BE "MID-STATE CONCRETE PRODUCTS" SLO COUNTY STANDARD OR APPROVED EQUAL. BOX BASE SECTION SHALL BE 4'0"x4'0"x7'6" OR AS APPROVED BY THE ENGINEER.

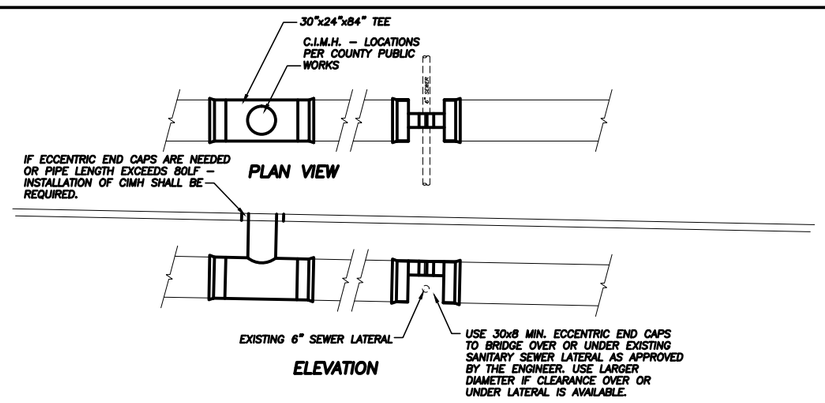

CONFLICT WITH SEWER LATERAL DETAIL
AND AUXILLARY MANHOLE ACCESS DETAIL

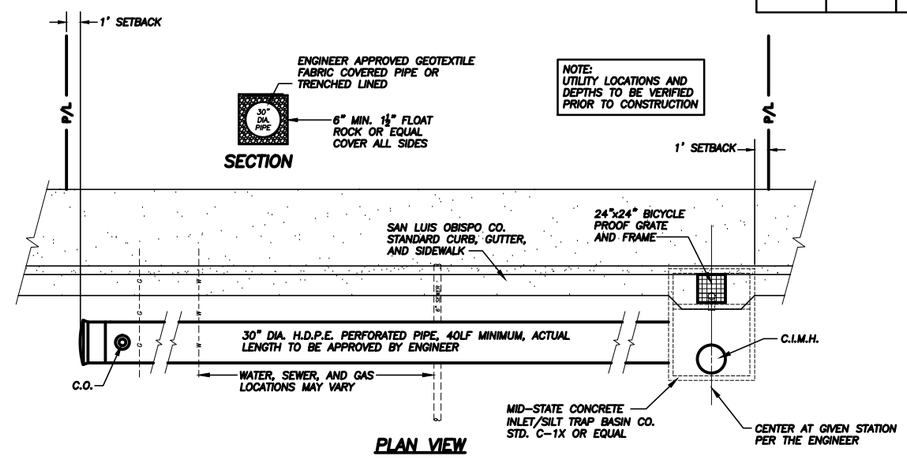

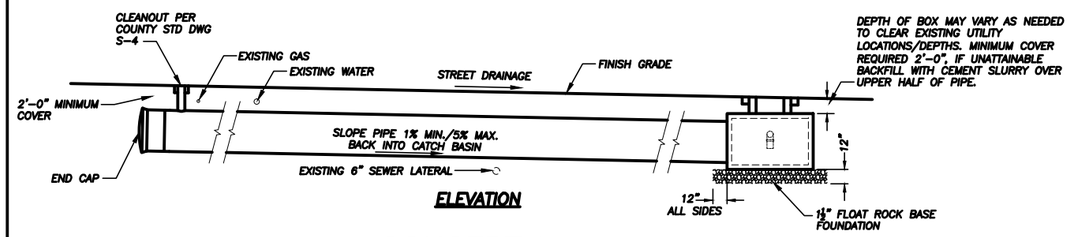

CONCEPT 1

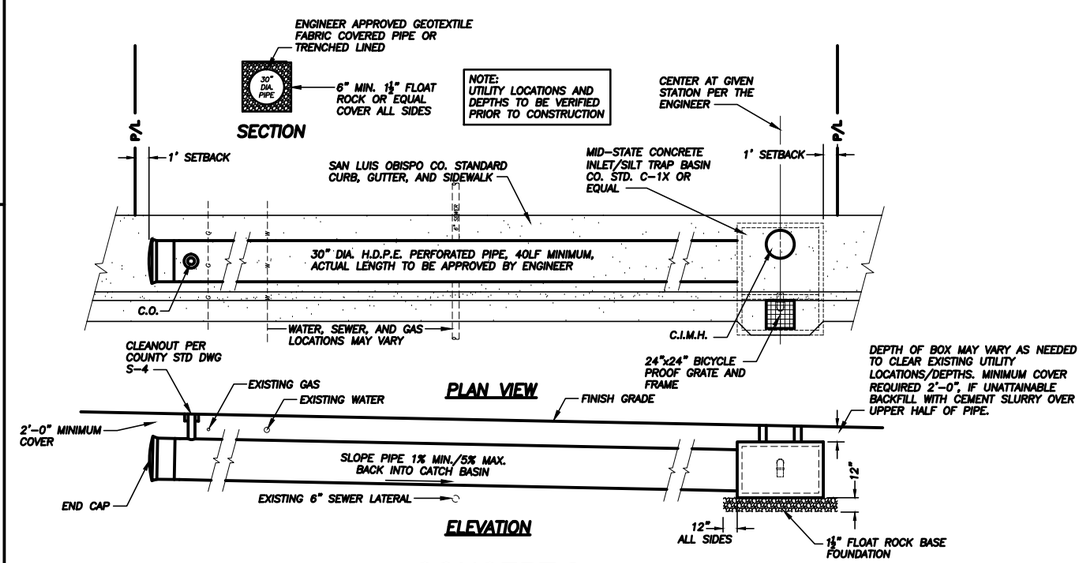

CONCEPT 2

DRAINAGE IMPROVEMENTS					
SILT TRAP DETENTION BASIN					
OCEANO, CA					
Designer	Date	Drawn By	Date	Design Engineer	Date
S. JONES	1/2012	C. COX	12/2003	J. WERST	1/2011

P:\Los Osos Drainage\INFILTRATOR.dwg, 1/12/2012 8:33:59 AM, DWG To PDF.pc3

ROAD NO.	JOB NO.	SHEET NO.	TOTAL SHEETS
		1	2

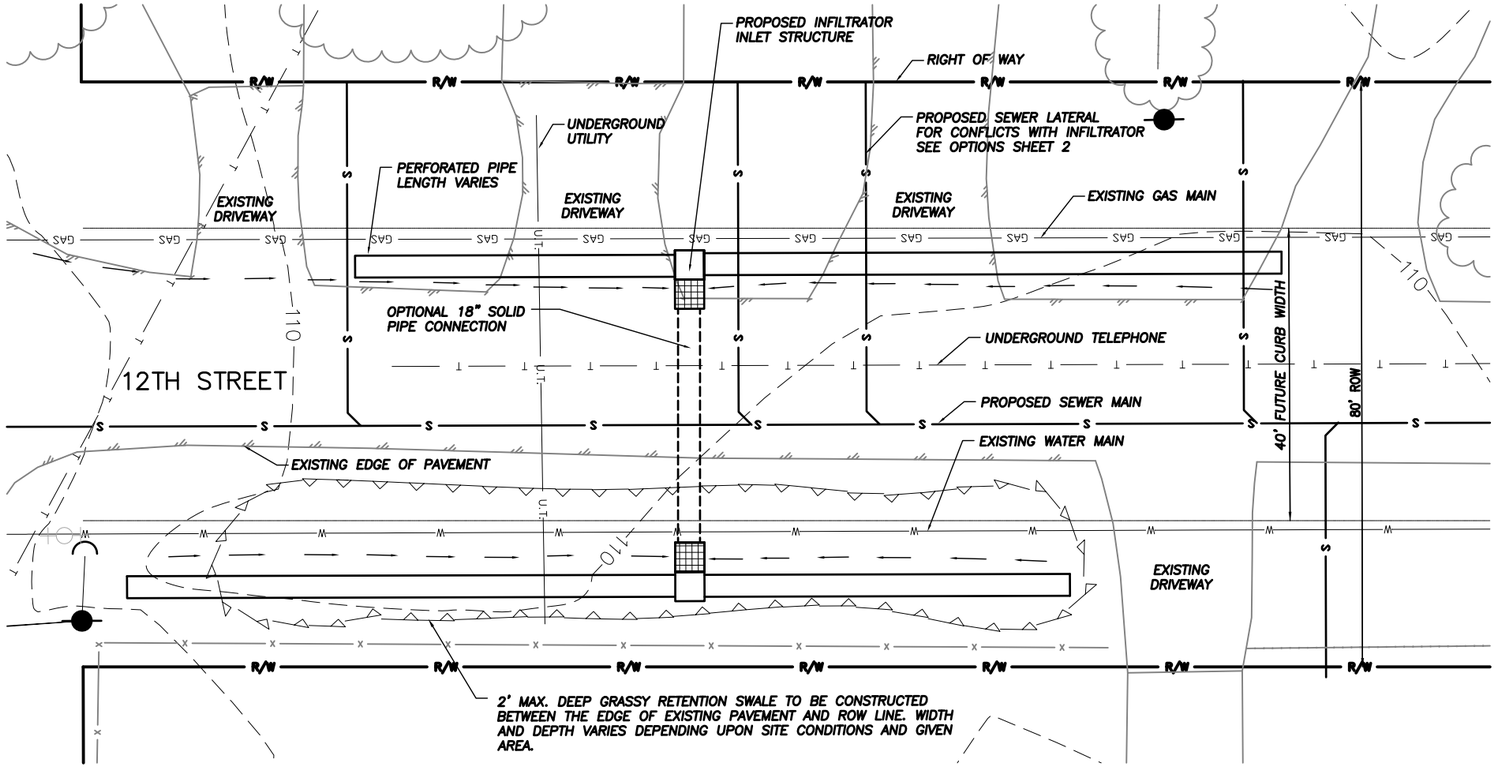

PLAN VIEW - TYPICAL RETENTION SWALE AND INFILTRATOR INSTALLATION

NOTE:

1.) PRIOR TO DIGGING CALL USA NORTH TO LOCATE AND MARK EXISTING UTILITIES. 1-800-227-2600

2.) CONTRACTOR TO POTHOLE AND VERIFY LOCATIONS OF ALL UTILITIES PRIOR TO TRENCHING.

3.) EXACT LOCATION OF INFILTRATORS AND RETENTION SWALES SHALL BE DETERMINED IN THE FIELD AT TIME OF CONSTRUCTION. LOCATIONS SHOWN ON THIS PLAN ARE APPROIMATE.

4.) SEE SHEET 2 FOR INFILTRATOR DETAILS

5.) INFILTRATORS SHALL BE INSTALLED AT LOCATIONS WHERE SUITABLE SOIL CONDITIONS ALLOW FOR GOOD INFILTRATION RATES.

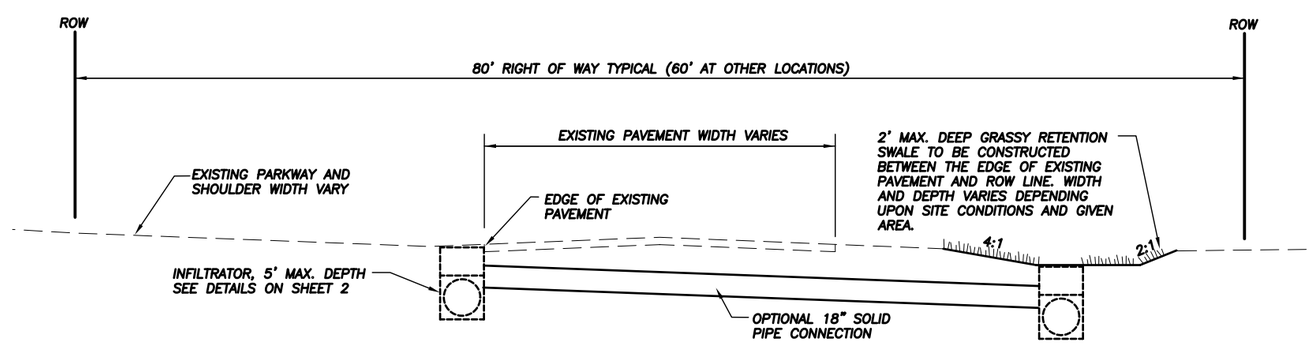

SECTION VIEW - TYPICAL RETENTION SWALE AND INFILTRATOR

DRAINAGE IMPROVEMENTS					
RETENTION SWALE AND INFILTRATOR					
LOS OSOS, CA					
Designer	Date	Drawn By	Date	Design Engineer	Date
S. JONES	1/2012	S. JONES	12/2003	J. WERST	1/2011

P:\Los Osos Drainage\DETAIL INFILTRATOR.dwg, 2/9/2012 8:40:30 AM, Adobe PDF

ROAD NO.	JOB NO.	SHEET NO.	TOTAL SHEETS
		2	2

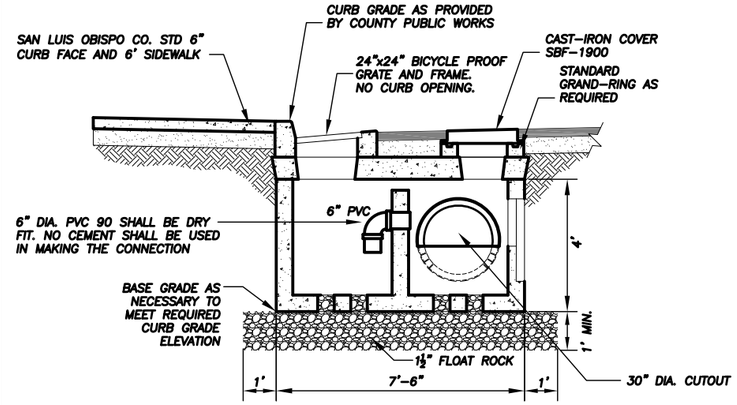

30" DIA. CUTOUT SHOWN ON SIDE WALL AND END WALL FOR REFERENCE ONLY

SECTION

CONCEPT 1

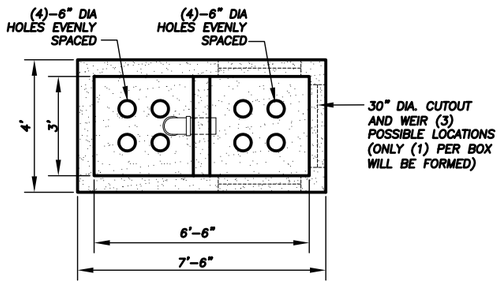

PLAN VIEW WITHOUT LID

NOTE:
CONCRETE BOX BASE SECTION, TRAFFIC RATED TOP SLAB, GRADE RINGS, CURB TOP, GRATE, FRAME AND COVER SHALL BE "MID-STATE CONCRETE PRODUCTS" SLO COUNTY STANDARD OR APPROVED EQUAL. BOX BASE SECTION SHALL BE 4'0"x4'0"x7'6" OR AS APPROVED BY THE ENGINEER.

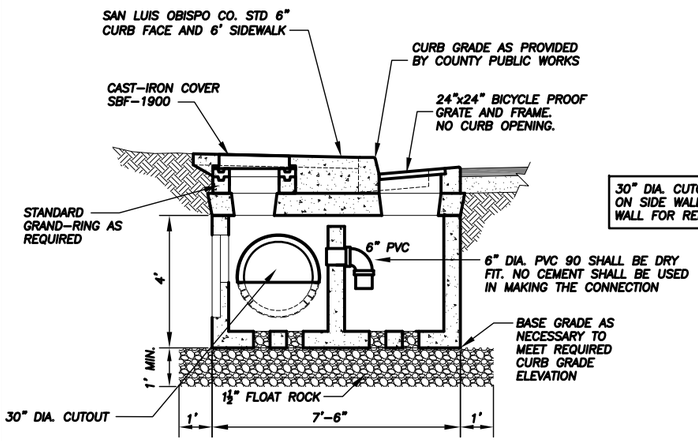

30" DIA. CUTOUT SHOWN ON SIDE WALL AND END WALL FOR REFERENCE ONLY

SECTION

CONCEPT 2

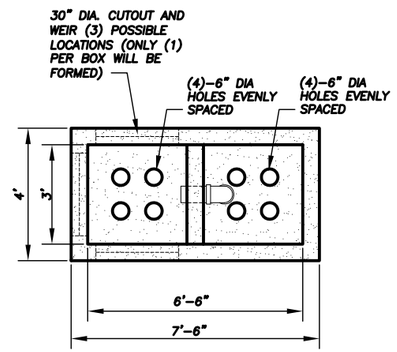

PLAN VIEW WITHOUT LID

NOTE:
CONCRETE BOX BASE SECTION, TRAFFIC RATED TOP SLAB, GRADE RINGS, CURB TOP, GRATE, FRAME AND COVER SHALL BE "MID-STATE CONCRETE PRODUCTS" SLO COUNTY STANDARD OR APPROVED EQUAL. BOX BASE SECTION SHALL BE 4'0"x4'0"x7'6" OR AS APPROVED BY THE ENGINEER.

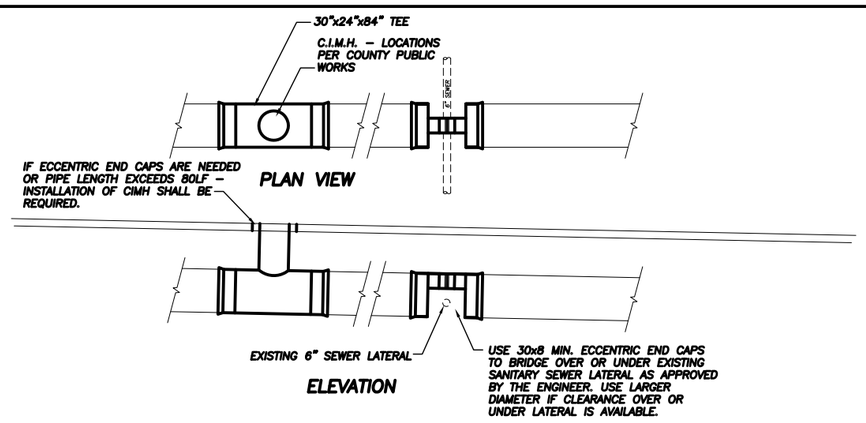

CONFLICT WITH SEWER LATERAL DETAIL
AND AUXILLARY MANHOLE ACCESS DETAIL

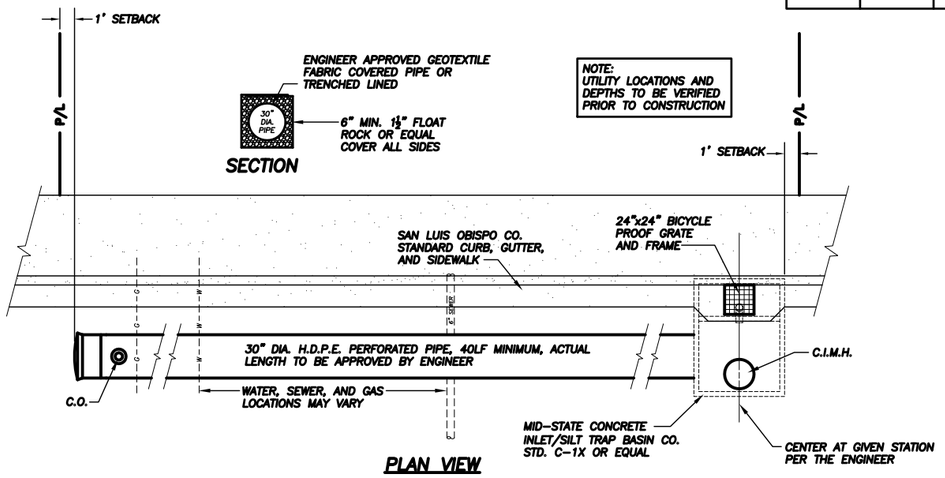

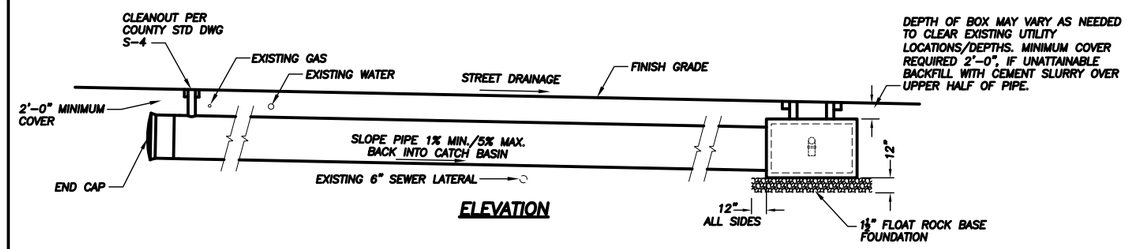

CONCEPT 1

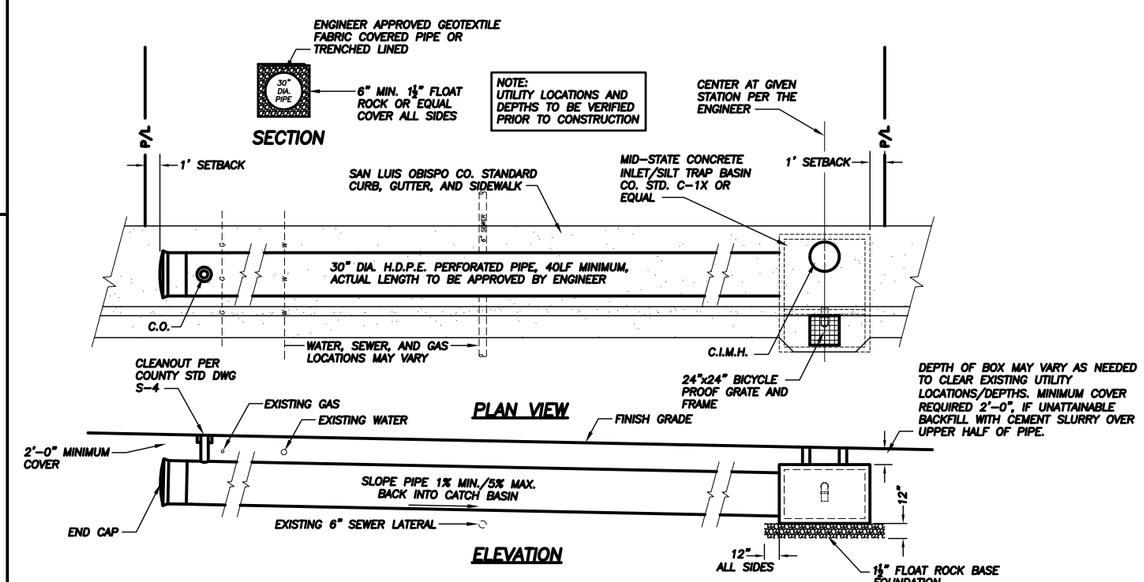

CONCEPT 2

DRAINAGE IMPROVEMENTS					
INFILTRATOR BASIN					
LOS OSOS, CA					
Designer	Date	Drawn By	Date	Design Engineer	Date
S. JONES	1/2012	C. COX	12/2003	J. WERST	1/2011

P:\Los Osos Drainage\DETAIL INFILTRATOR.dwg, 2/9/2012 8:42:12 AM, Adobe PDF