Material Delivery and Storage WM-1

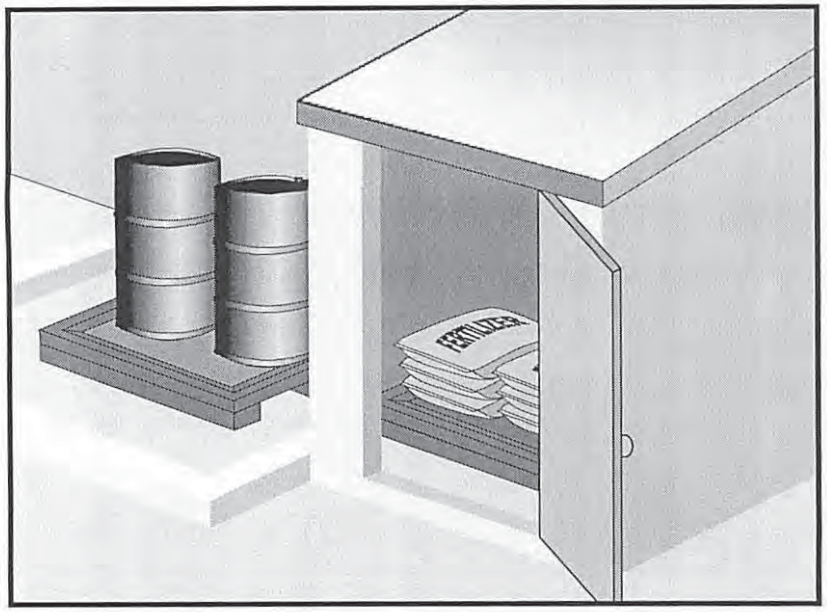

Categories		
EC	Erosion Control	
SE	Sediment Control	
TC	Tracking Control	
WE	Wind Erosion Control	
NS	Non-Stormwater Management Control	
WM	Waste Management and Materials Pollution Control	☑

Legend:

☑ **Primary Category**

☒ **Secondary Category**

Targeted Constituents	
Sediment	☑
Nutrients	☑
Trash	☑
Metals	☑
Bacteria	
Oil and Grease	☑
Organics	☑

Potential Alternatives

None

Description and Purpose

Prevent, reduce, or eliminate the discharge of pollutants from material delivery and storage to the stormwater system or watercourses by minimizing the storage of hazardous materials onsite, storing materials in watertight containers and/or a completely enclosed designated area, installing secondary containment, conducting regular inspections, and training employees and subcontractors.

This best management practice covers only material delivery and storage. For other information on materials, see WM-2, Material Use, or WM-4, Spill Prevention and Control. For information on wastes, see the waste management BMPs in this section.

Suitable Applications

These procedures are suitable for use at all construction sites with delivery and storage of the following materials:

- Soil stabilizers and binders
- Pesticides and herbicides
- Fertilizers
- Detergents
- Plaster
- Petroleum products such as fuel, oil, and grease

CASQA
CALIFORNIA STORMWATER QUALITY ASSOCIATION

- Asphalt and concrete components
- Hazardous chemicals such as acids, lime, glues, adhesives, paints, solvents, and curing compounds
- Concrete compounds
- Other materials that may be detrimental if released to the environment

Limitations

- Space limitation may preclude indoor storage.
- Storage sheds often must meet building and fire code requirements.

Implementation

The following steps should be taken to minimize risk:

- Chemicals must be stored in water tight containers with appropriate secondary containment or in a storage shed.
- When a material storage area is located on bare soil, the area should be lined and bermed.
- Use containment pallets or other practical and available solutions, such as storing materials within newly constructed buildings or garages, to meet material storage requirements.
- Stack erodible landscape material on pallets and cover when not in use.
- Contain all fertilizers and other landscape materials when not in use.
- Temporary storage areas should be located away from vehicular traffic.
- Material Safety Data Sheets (MSDS) should be available on-site for all materials stored that have the potential to effect water quality.
- Construction site areas should be designated for material delivery and storage.
- Material delivery and storage areas should be located away from waterways, if possible.
  - Avoid transport near drainage paths or waterways.
  - Surround with earth berms or other appropriate containment BMP. See EC-9, Earth Dikes and Drainage Swales.
  - Place in an area that will be paved.
- Storage of reactive, ignitable, or flammable liquids must comply with the fire codes of your area. Contact the local Fire Marshal to review site materials, quantities, and proposed storage area to determine specific requirements. See the Flammable and Combustible Liquid Code, NFPA30.
- An up to date inventory of materials delivered and stored onsite should be kept.

- Hazardous materials storage onsite should be minimized.
- Hazardous materials should be handled as infrequently as possible.
- Keep ample spill cleanup supplies appropriate for the materials being stored. Ensure that cleanup supplies are in a conspicuous, labeled area.
- Employees and subcontractors should be trained on the proper material delivery and storage practices.
- Employees trained in emergency spill cleanup procedures must be present when dangerous materials or liquid chemicals are unloaded.
- If significant residual materials remain on the ground after construction is complete, properly remove and dispose of materials and any contaminated soil. See WM-7, Contaminated Soil Management. If the area is to be paved, pave as soon as materials are removed to stabilize the soil.

Material Storage Areas and Practices

- Liquids, petroleum products, and substances listed in 40 CFR Parts 110, 117, or 302 should be stored in approved containers and drums and should not be overfilled. Containers and drums should be placed in temporary containment facilities for storage.
- A temporary containment facility should provide for a spill containment volume able to contain precipitation from a 25 year storm event, plus the greater of 10% of the aggregate volume of all containers or 100% of the capacity of the largest container within its boundary, whichever is greater.
- A temporary containment facility should be impervious to the materials stored therein for a minimum contact time of 72 hours.
- A temporary containment facility should be maintained free of accumulated rainwater and spills. In the event of spills or leaks, accumulated rainwater and spills should be collected and placed into drums. These liquids should be handled as a hazardous waste unless testing determines them to be non-hazardous. All collected liquids or non-hazardous liquids should be sent to an approved disposal site.
- Sufficient separation should be provided between stored containers to allow for spill cleanup and emergency response access.
- Incompatible materials, such as chlorine and ammonia, should not be stored in the same temporary containment facility.
- Materials should be covered prior to, and during rain events.
- Materials should be stored in their original containers and the original product labels should be maintained in place in a legible condition. Damaged or otherwise illegible labels should be replaced immediately.

- Bagged and boxed materials should be stored on pallets and should not be allowed to accumulate on the ground. To provide protection from wind and rain throughout the rainy season, bagged and boxed materials should be covered during non-working days and prior to and during rain events.
- Stockpiles should be protected in accordance with WM-3, Stockpile Management.
- Materials should be stored indoors within existing structures or completely enclosed storage sheds when available.
- Proper storage instructions should be posted at all times in an open and conspicuous location.
- An ample supply of appropriate spill clean up material should be kept near storage areas.
- Also see WM-6, Hazardous Waste Management, for storing of hazardous wastes.

Material Delivery Practices

- Keep an accurate, up-to-date inventory of material delivered and stored onsite.
- Arrange for employees trained in emergency spill cleanup procedures to be present when dangerous materials or liquid chemicals are unloaded.

Spill Cleanup

- Contain and clean up any spill immediately.
- Properly remove and dispose of any hazardous materials or contaminated soil if significant residual materials remain on the ground after construction is complete. See WM-7, Contaminated Soil Management.
- See WM-4, Spill Prevention and Control, for spills of chemicals and/or hazardous materials.
- If spills or leaks of materials occur that are not contained and could discharge to surface waters, non-visible sampling of site discharge may be required. Refer to the General Permit or to your project specific Construction Site Monitoring Plan to determine if and where sampling is required.

Cost

- The largest cost of implementation may be in the construction of a materials storage area that is covered and provides secondary containment.

Inspection and Maintenance

- BMPs must be inspected in accordance with General Permit requirements for the associated project type and risk level. It is recommended that at a minimum, BMPs be inspected weekly, prior to forecasted rain events, daily during extended rain events, and after the conclusion of rain events.
- Keep storage areas clean and well organized, including a current list of all materials onsite.
- Inspect labels on containers for legibility and accuracy.

- Repair or replace perimeter controls, containment structures, covers, and liners as needed to maintain proper function.

References

Blueprint for a Clean Bay: Best Management Practices to Prevent Stormwater Pollution from Construction Related Activities; Santa Clara Valley Nonpoint Source Pollution Control Program, 1995.

Coastal Nonpoint Pollution Control Program: Program Development and Approval Guidance, Working Group Working Paper; USEPA, April 1992.

Stormwater Quality Handbooks - Construction Site Best Management Practices (BMPs) Manual, State of California Department of Transportation (Caltrans), March 2003.

Stormwater Management for Construction Activities; Developing Pollution Prevention Plans and Best Management Practice, EPA 832-R-92005; USEPA, April 1992.

Material Use

WM-2

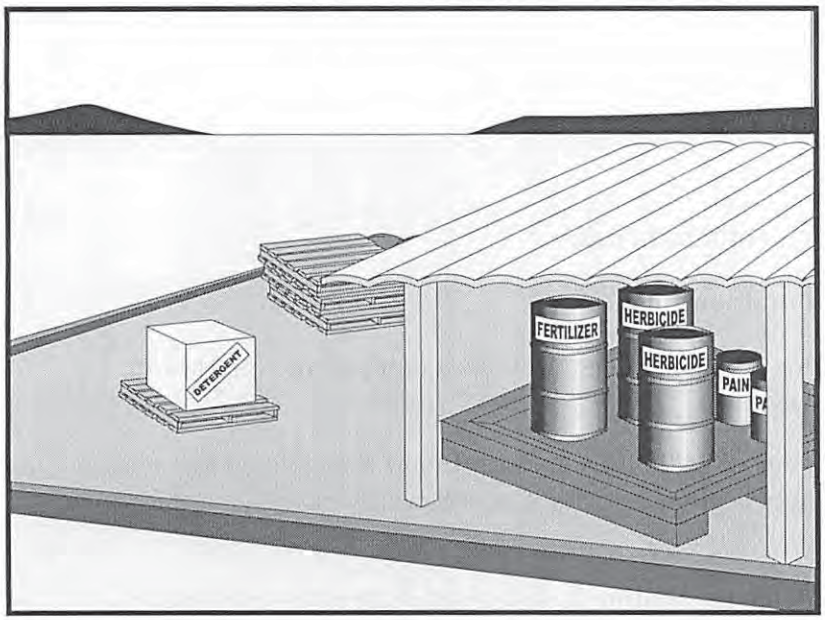

Categories

EC	Erosion Control	
SE	Sediment Control	
TC	Tracking Control	
WE	Wind Erosion Control	
NS	Non-Stormwater Management Control	
WM	Waste Management and Materials Pollution Control	☑

Legend:

☑ **Primary Category**

☒ **Secondary Category**

Targeted Constituents

Sediment	☑
Nutrients	☑
Trash	☑
Metals	☑
Bacteria	
Oil and Grease	☑
Organics	☑

Potential Alternatives

None

Description and Purpose

Prevent or reduce the discharge of pollutants to the storm drain system or watercourses from material use by using alternative products, minimizing hazardous material use onsite, and training employees and subcontractors.

Suitable Applications

This BMP is suitable for use at all construction projects. These procedures apply when the following materials are used or prepared onsite:

- Pesticides and herbicides
- Fertilizers
- Detergents
- Petroleum products such as fuel, oil, and grease
- Asphalt and other concrete components
- Other hazardous chemicals such as acids, lime, glues, adhesives, paints, solvents, and curing compounds
- Other materials that may be detrimental if released to the environment

CASQA
CALIFORNIA STORMWATER QUALITY ASSOCIATION

Limitations

Safer alternative building and construction products may not be available or suitable in every instance.

Implementation

The following steps should be taken to minimize risk:

- Minimize use of hazardous materials onsite.
- Follow manufacturer instructions regarding uses, protective equipment, ventilation, flammability, and mixing of chemicals.
- Train personnel who use pesticides. The California Department of Pesticide Regulation and county agricultural commissioners license pesticide dealers, certify pesticide applicators, and conduct onsite inspections.
- The preferred method of termiticide application is soil injection near the existing or proposed structure foundation/slab; however, if not feasible, soil drench application of termiticides should follow EPA label guidelines and the following recommendations (most of which are applicable to most pesticide applications):
  - Do not treat soil that is water-saturated or frozen.
  - Application shall not commence within 24-hours of a predicted precipitation event with a 40% or greater probability. Weather tracking must be performed on a daily basis prior to termiticide application and during the period of termiticide application.
  - Do not allow treatment chemicals to runoff from the target area. Apply proper quantity to prevent excess runoff. Provide containment for and divert stormwater from application areas using berms or diversion ditches during application.
  - Dry season: Do not apply within 10 feet of storm drains. Do not apply within 25 feet of aquatic habitats (such as, but not limited to, lakes; reservoirs; rivers; permanent streams; marshes or ponds; estuaries; and commercial fish farm ponds).
  - Wet season: Do not apply within 50 feet of storm drains or aquatic habitats (such as, but not limited to, lakes; reservoirs; rivers; permanent streams; marshes or ponds; estuaries; and commercial fish farm ponds) unless a vegetative buffer is present (if so, refer to dry season requirements).
  - Do not make on-grade applications when sustained wind speeds are above 10 mph (at application site) at nozzle end height.
  - Cover treatment site prior to a rain event in order to prevent run-off of the pesticide into non-target areas. The treated area should be limited to a size that can be backfilled and/or covered by the end of the work shift. Backfilling or covering of the treated area shall be done by the end of the same work shift in which the application is made.
  - The applicator must either cover the soil him/herself or provide written notification of the above requirement to the contractor on site and to the person commissioning the

application (if different than the contractor). If notice is provided to the contractor or the person commissioning the application, then they are responsible under the Federal Insecticide Fungicide, and Rodenticide Act (FIFRA) to ensure that: 1) if the concrete slab cannot be poured over the treated soil within 24 hours of application, the treated soil is covered with a waterproof covering (such as polyethylene sheeting), and 2) the treated soil is covered if precipitation is predicted to occur before the concrete slab is scheduled to be poured.

- Do not over-apply fertilizers, herbicides, and pesticides. Prepare only the amount needed. Follow the recommended usage instructions. Over-application is expensive and environmentally harmful. Unless on steep slopes, till fertilizers into the soil rather than hydraulic application. Apply surface dressings in several smaller applications, as opposed to one large application, to allow time for infiltration and to avoid excess material being carried offsite by runoff. Do not apply these chemicals before predicted rainfall.
- Train employees and subcontractors in proper material use.
- Supply Material Safety Data Sheets (MSDS) for all materials.
- Dispose of latex paint and paint cans, used brushes, rags, absorbent materials, and drop cloths, when thoroughly dry and are no longer hazardous, with other construction debris.
- Do not remove the original product label; it contains important safety and disposal information. Use the entire product before disposing of the container.
- Mix paint indoors or in a containment area. Never clean paintbrushes or rinse paint containers into a street, gutter, storm drain, or watercourse. Dispose of any paint thinners, residue, and sludge(s) that cannot be recycled, as hazardous waste.
- For water-based paint, clean brushes to the extent practicable, and rinse to a drain leading to a sanitary sewer where permitted, or contain for proper disposal off site. For oil-based paints, clean brushes to the extent practicable, and filter and reuse thinners and solvents.
- Use recycled and less hazardous products when practical. Recycle residual paints, solvents, non-treated lumber, and other materials.
- Use materials only where and when needed to complete the construction activity. Use safer alternative materials as much as possible. Reduce or eliminate use of hazardous materials onsite when practical.
- Document the location, time, chemicals applied, and applicator's name and qualifications.
- Keep an ample supply of spill clean up material near use areas. Train employees in spill clean up procedures.
- Avoid exposing applied materials to rainfall and runoff unless sufficient time has been allowed for them to dry.
- Discontinue use of erodible landscape material within 2 days prior to a forecasted rain event and materials should be covered and/or bermed.

- Provide containment for material use areas such as masons' areas or paint mixing/preparation areas to prevent materials/pollutants from entering stormwater.

Costs

All of the above are low cost measures.

Inspection and Maintenance

- Inspect and verify that activity-based BMPs are in place prior to the commencement of associated activities.
- BMPs must be inspected in accordance with General Permit requirements for the associated project type and risk level. It is recommended that at a minimum, BMPs be inspected weekly, prior to forecasted rain events, daily during extended rain events, and after the conclusion of rain events.
- Ensure employees and subcontractors throughout the job are using appropriate practices.

References

Blueprint for a Clean Bay: Best Management Practices to Prevent Stormwater Pollution from Construction Related Activities; Santa Clara Valley Nonpoint Source Pollution Control Program, 1995.

Coastal Nonpoint Pollution Control Program: Program Development and Approval Guidance, Working Group Working Paper; USEPA, April 1992.

Comments on Risk Assessments Risk Reduction Options for Cypermethrin: Docket No. OPP–2005–0293; California Stormwater Quality Association (CASQA) letter to USEPA, 2006.Environmental Hazard and General Labeling for Pyrethroid Non-Agricultural Outdoor Products, EPA-HQ-OPP-2008-0331-0021; USEPA, 2008.

Stormwater Quality Handbooks - Construction Site Best Management Practices (BMPs) Manual, State of California Department of Transportation (Caltrans), March 2003.

Stormwater Management for Construction Activities; Developing Pollution Prevention Plans and Best Management Practice, EPA 832-R-92005; USEPA, April 1992.

Stockpile Management WM-3

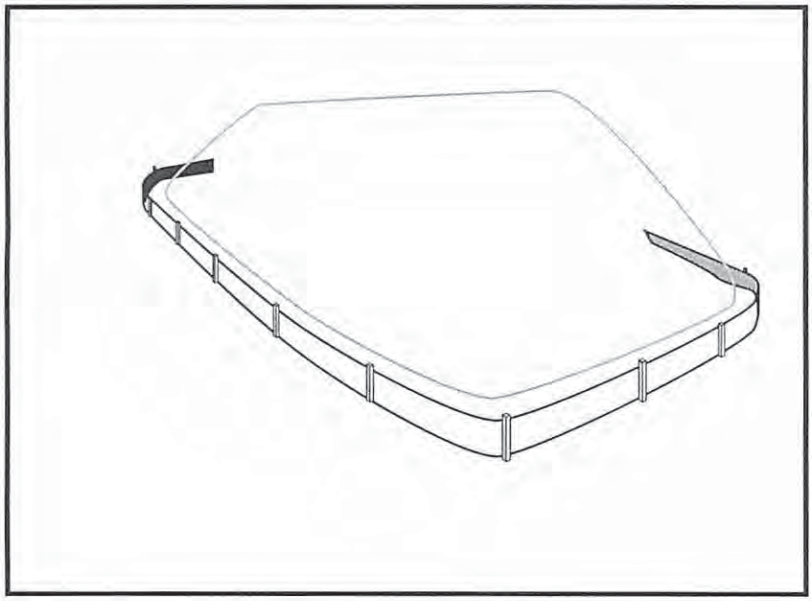

Categories		
EC	Erosion Control	
SE	Sediment Control	☒
TC	Tracking Control	
WE	Wind Erosion Control	
NS	Non-Stormwater Management Control	☒
WM	Waste Management and Materials Pollution Control	☑

Legend:

☑ **Primary Category**

☒ **Secondary Category**

Targeted Constituents	
Sediment	☑
Nutrients	☑
Trash	☑
Metals	☑
Bacteria	
Oil and Grease	☑
Organics	☑

Potential Alternatives

None

Description and Purpose

Stockpile management procedures and practices are designed to reduce or eliminate air and stormwater pollution from stockpiles of soil, soil amendments, sand, paving materials such as portland cement concrete (PCC) rubble, asphalt concrete (AC), asphalt concrete rubble, aggregate base, aggregate sub base or pre-mixed aggregate, asphalt minder (so called "cold mix" asphalt), and pressure treated wood.

Suitable Applications

Implement in all projects that stockpile soil and other loose materials.

Limitations

- Plastic sheeting as a stockpile protection is temporary and hard to manage in windy conditions. Where plastic is used, consider use of plastic tarps with nylon reinforcement which may be more durable than standard sheeting.
- Plastic sheeting can increase runoff volume due to lack of infiltration and potentially cause perimeter control failure.
- Plastic sheeting breaks down faster in sunlight.
- The use of plastic materials should be avoided when feasible and photodegradable plastics should not be used.

Implementation

Protection of stockpiles is a year-round requirement. To properly manage stockpiles:

- On larger sites, a minimum of 50 ft separation from concentrated flows of stormwater, drainage courses, and inlets is recommended.
- All stockpiles are required to be protected immediately if they are not scheduled to be used within 14 days.
- Protect all stockpiles from stormwater run-on using temporary perimeter sediment barriers such as compost berms (SE-13), temporary silt dikes (SE-12), fiber rolls (SE-5), silt fences (SE-1), sandbags (SE-8), gravel bags (SE-6), or biofilter bags (SE-14). Refer to the individual fact sheet for each of these controls for installation information.
- Implement wind erosion control practices as appropriate on all stockpiled material. For specific information, see WE-1, Wind Erosion Control.
- Manage stockpiles of contaminated soil in accordance with WM-7, Contaminated Soil Management.
- Place bagged materials on pallets and under cover.
- Ensure that stockpile coverings are installed securely to protect from wind and rain.
- Some plastic covers withstand weather and sunlight better than others. Select cover materials or methods based on anticipated duration of use.

Protection of Non-Active Stockpiles

Non-active stockpiles of the identified materials should be protected further as follows:

Soil stockpiles

- Cover and project soil stockpiles with soil stabilization measures and a temporary perimeter sediment barrier at all times.
- Consider temporary vegetation for topsoil piles that will be stockpiled for extended periods.

Stockpiles of Portland cement concrete rubble, asphalt concrete, asphalt concrete rubble, aggregate base, or aggregate sub base

- Provide covers and protect these stockpiles with a temporary perimeter sediment barrier at all times.

Stockpiles of "cold mix"

- Cover cold mix stockpiles and place them on plastic sheeting (or comparable material) and surround the stockpiles with a berm all times.

Stockpiles of fly ash, stucco, hydrated lime

- Cover stockpiles of materials that may raise the pH of runoff (i.e., basic materials) with plastic and surround the stockpiles with a berm at all times.

Stockpiles/Storage of wood (Pressure treated with chromated copper arsenate or ammoniacal copper zinc arsenate)

- Cover treated wood with plastic sheeting (or comparable material) and surround with a berm at all times.

Protection of Active Stockpiles

Active stockpiles of the identified materials should be protected as follows:

- All stockpiles should be covered and protected with a temporary linear sediment barrier prior to the onset of precipitation.
- Stockpiles of "cold mix" and treated wood, and basic materials should be placed on and covered with plastic sheeting or comparable material and surrounded by a berm prior to the onset of precipitation.
- The downstream perimeter of an active stockpile should be protected with a linear sediment barrier or berm and runoff should be diverted around or away from the stockpile on the upstream perimeter.

Costs

For cost information associated with stockpile protection refer to the individual erosion or sediment control BMP fact sheet considered for implementation (For example, refer to SE-1 Silt Fence for installation of silt fence around the perimeter of a stockpile.)

Inspection and Maintenance

- Stockpiles must be inspected in accordance with General Permit requirements for the associated project type and risk level. It is recommended that at a minimum, BMPs be inspected weekly, prior to forecasted rain events, daily during extended rain events, and after the conclusion of rain events.
- It may be necessary to inspect stockpiles covered with plastic sheeting more frequently during certain conditions (for example, high winds or extreme heat).
- Repair and/or replace perimeter controls and covers as needed to keep them functioning properly.
- Sediment shall be removed when it reaches one-third of the barrier height.

References

Stormwater Quality Handbooks - Construction Site Best Management Practices (BMPs) Manual, State of California Department of Transportation (Caltrans), March 2003.

Spill Prevention and Control WM-4

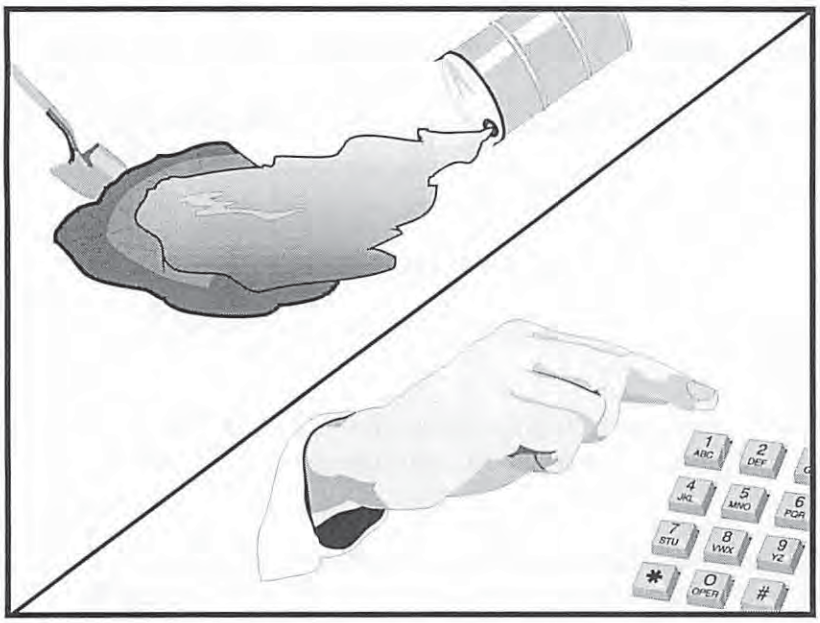

Categories

EC	Erosion Control	
SE	Sediment Control	
TC	Tracking Control	
WE	Wind Erosion Control	
NS	Non-Stormwater Management Control	
WM	Waste Management and Materials Pollution Control	☑

Legend:

☑ **Primary Objective**

☒ **Secondary Objective**

Targeted Constituents

Sediment	☑
Nutrients	☑
Trash	☑
Metals	☑
Bacteria	
Oil and Grease	☑
Organics	☑

Potential Alternatives

None

Description and Purpose

Prevent or reduce the discharge of pollutants to drainage systems or watercourses from leaks and spills by reducing the chance for spills, stopping the source of spills, containing and cleaning up spills, properly disposing of spill materials, and training employees.

This best management practice covers only spill prevention and control. However, WM-1, Materials Delivery and Storage, and WM-2, Material Use, also contain useful information, particularly on spill prevention. For information on wastes, see the waste management BMPs in this section.

Suitable Applications

This BMP is suitable for all construction projects. Spill control procedures are implemented anytime chemicals or hazardous substances are stored on the construction site, including the following materials:

- Soil stabilizers/binders
- Dust palliatives
- Herbicides
- Growth inhibitors
- Fertilizers
- Deicing/anti-icing chemicals

CASQA
CALIFORNIA STORMWATER QUALITY ASSOCIATION

- Fuels
- Lubricants
- Other petroleum distillates

Limitations

- In some cases it may be necessary to use a private spill cleanup company.
- This BMP applies to spills caused by the contractor and subcontractors.
- Procedures and practices presented in this BMP are general. Contractor should identify appropriate practices for the specific materials used or stored onsite

Implementation

The following steps will help reduce the stormwater impacts of leaks and spills:

Education

- Be aware that different materials pollute in different amounts. Make sure that each employee knows what a "significant spill" is for each material they use, and what is the appropriate response for "significant" and "insignificant" spills.
- Educate employees and subcontractors on potential dangers to humans and the environment from spills and leaks.
- Hold regular meetings to discuss and reinforce appropriate disposal procedures (incorporate into regular safety meetings).
- Establish a continuing education program to indoctrinate new employees.
- Have contractor's superintendent or representative oversee and enforce proper spill prevention and control measures.

General Measures

- To the extent that the work can be accomplished safely, spills of oil, petroleum products, substances listed under 40 CFR parts 110,117, and 302, and sanitary and septic wastes should be contained and cleaned up immediately.
- Store hazardous materials and wastes in covered containers and protect from vandalism.
- Place a stockpile of spill cleanup materials where it will be readily accessible.
- Train employees in spill prevention and cleanup.
- Designate responsible individuals to oversee and enforce control measures.
- Spills should be covered and protected from stormwater runon during rainfall to the extent that it doesn't compromise clean up activities.
- Do not bury or wash spills with water.

- Store and dispose of used clean up materials, contaminated materials, and recovered spill material that is no longer suitable for the intended purpose in conformance with the provisions in applicable BMPs.
- Do not allow water used for cleaning and decontamination to enter storm drains or watercourses. Collect and dispose of contaminated water in accordance with WM-10, Liquid Waste Management.
- Contain water overflow or minor water spillage and do not allow it to discharge into drainage facilities or watercourses.
- Place proper storage, cleanup, and spill reporting instructions for hazardous materials stored or used on the project site in an open, conspicuous, and accessible location.
- Keep waste storage areas clean, well organized, and equipped with ample cleanup supplies as appropriate for the materials being stored. Perimeter controls, containment structures, covers, and liners should be repaired or replaced as needed to maintain proper function.

Cleanup

- Clean up leaks and spills immediately.
- Use a rag for small spills on paved surfaces, a damp mop for general cleanup, and absorbent material for larger spills. If the spilled material is hazardous, then the used cleanup materials are also hazardous and must be sent to either a certified laundry (rags) or disposed of as hazardous waste.
- Never hose down or bury dry material spills. Clean up as much of the material as possible and dispose of properly. See the waste management BMPs in this section for specific information.

Minor Spills

- Minor spills typically involve small quantities of oil, gasoline, paint, etc. which can be controlled by the first responder at the discovery of the spill.
- Use absorbent materials on small spills rather than hosing down or burying the spill.
- Absorbent materials should be promptly removed and disposed of properly.
- Follow the practice below for a minor spill:
  - Contain the spread of the spill.
  - Recover spilled materials.
  - Clean the contaminated area and properly dispose of contaminated materials.

Semi-Significant Spills

- Semi-significant spills still can be controlled by the first responder along with the aid of other personnel such as laborers and the foreman, etc. This response may require the cessation of all other activities.

- Spills should be cleaned up immediately:
  - Contain spread of the spill.
  - Notify the project foreman immediately.
  - If the spill occurs on paved or impermeable surfaces, clean up using "dry" methods (absorbent materials, cat litter and/or rags). Contain the spill by encircling with absorbent materials and do not let the spill spread widely.
  - If the spill occurs in dirt areas, immediately contain the spill by constructing an earthen dike. Dig up and properly dispose of contaminated soil.
  - If the spill occurs during rain, cover spill with tarps or other material to prevent contaminating runoff.

Significant/Hazardous Spills

- For significant or hazardous spills that cannot be controlled by personnel in the immediate vicinity, the following steps should be taken:
  - Notify the local emergency response by dialing 911. In addition to 911, the contractor will notify the proper county officials. It is the contractor's responsibility to have all emergency phone numbers at the construction site.
  - Notify the Governor's Office of Emergency Services Warning Center, (916) 845-8911.
  - For spills of federal reportable quantities, in conformance with the requirements in 40 CFR parts 110,119, and 302, the contractor should notify the National Response Center at (800) 424-8802.
  - Notification should first be made by telephone and followed up with a written report.
  - The services of a spills contractor or a Haz-Mat team should be obtained immediately. Construction personnel should not attempt to clean up until the appropriate and qualified staffs have arrived at the job site.
  - Other agencies which may need to be consulted include, but are not limited to, the Fire Department, the Public Works Department, the Coast Guard, the Highway Patrol, the City/County Police Department, Department of Toxic Substances, California Division of Oil and Gas, Cal/OSHA, etc.

Reporting

- Report significant spills to local agencies, such as the Fire Department; they can assist in cleanup.
- Federal regulations require that any significant oil spill into a water body or onto an adjoining shoreline be reported to the National Response Center (NRC) at 800-424-8802 (24 hours).

Use the following measures related to specific activities:

Vehicle and Equipment Maintenance

- If maintenance must occur onsite, use a designated area and a secondary containment, located away from drainage courses, to prevent the runon of stormwater and the runoff of spills.
- Regularly inspect onsite vehicles and equipment for leaks and repair immediately
- Check incoming vehicles and equipment (including delivery trucks, and employee and subcontractor vehicles) for leaking oil and fluids. Do not allow leaking vehicles or equipment onsite.
- Always use secondary containment, such as a drain pan or drop cloth, to catch spills or leaks when removing or changing fluids.
- Place drip pans or absorbent materials under paving equipment when not in use.
- Use absorbent materials on small spills rather than hosing down or burying the spill. Remove the absorbent materials promptly and dispose of properly.
- Promptly transfer used fluids to the proper waste or recycling drums. Don't leave full drip pans or other open containers lying around
- Oil filters disposed of in trashcans or dumpsters can leak oil and pollute stormwater. Place the oil filter in a funnel over a waste oil-recycling drum to drain excess oil before disposal. Oil filters can also be recycled. Ask the oil supplier or recycler about recycling oil filters.
- Store cracked batteries in a non-leaking secondary container. Do this with all cracked batteries even if you think all the acid has drained out. If you drop a battery, treat it as if it is cracked. Put it into the containment area until you are sure it is not leaking.

Vehicle and Equipment Fueling

- If fueling must occur onsite, use designate areas, located away from drainage courses, to prevent the runon of stormwater and the runoff of spills.
- Discourage "topping off" of fuel tanks.
- Always use secondary containment, such as a drain pan, when fueling to catch spills/ leaks.

Costs

Prevention of leaks and spills is inexpensive. Treatment and/ or disposal of contaminated soil or water can be quite expensive.

Inspection and Maintenance

- Inspect and verify that activity–based BMPs are in place prior to the commencement of associated activities. While activities associated with the BMP are under way, inspect BMPs in accordance with General Permit requirements for the associated project type and risk level. It is recommended that at a minimum, BMPs be inspected weekly, prior to forecasted rain events, daily during extended rain events, and after the conclusion of rain events.

- Inspect BMPs subject to non-stormwater discharge daily while non-stormwater discharges occur.
- Keep ample supplies of spill control and cleanup materials onsite, near storage, unloading, and maintenance areas.
- Update your spill prevention and control plan and stock cleanup materials as changes occur in the types of chemicals onsite.

References

Blueprint for a Clean Bay: Best Management Practices to Prevent Stormwater Pollution from Construction Related Activities; Santa Clara Valley Nonpoint Source Pollution Control Program, 1995.

Stormwater Quality Handbooks - Construction Site Best Management Practices (BMPs) Manual, State of California Department of Transportation (Caltrans), November 2000.

Stormwater Management for Construction Activities; Developing Pollution Prevention Plans and Best Management Practice, EPA 832-R-92005; USEPA, April 1992.

Solid Waste Management WM-5

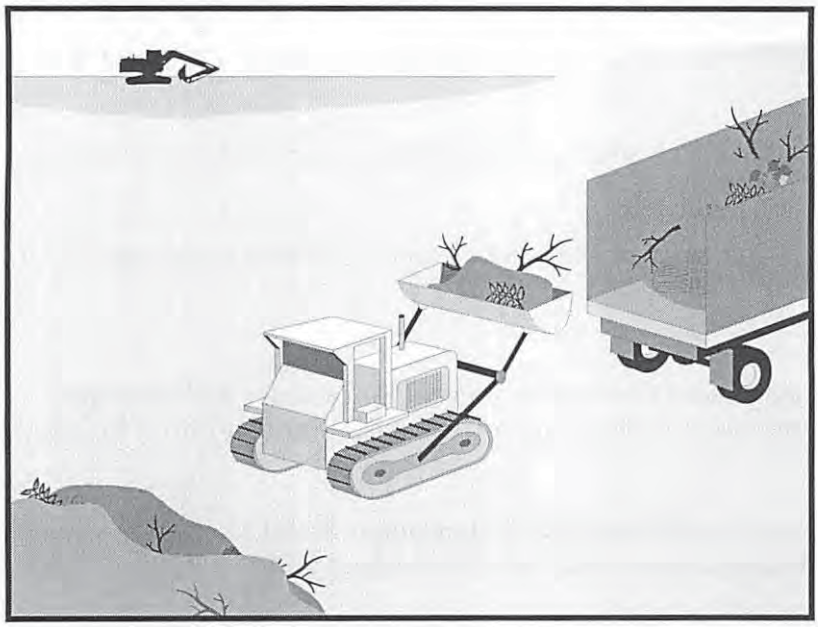

Categories		
EC	Erosion Control	
SE	Sediment Control	
TC	Tracking Control	
WE	Wind Erosion Control	
NS	Non-Stormwater Management Control	
WM	Waste Management and Materials Pollution Control	☑

Legend:

☑ **Primary Objective**

☒ **Secondary Objective**

Targeted Constituents	
Sediment	☑
Nutrients	☑
Trash	☑
Metals	☑
Bacteria	
Oil and Grease	☑
Organics	☑

Potential Alternatives

None

Description and Purpose

Solid waste management procedures and practices are designed to prevent or reduce the discharge of pollutants to stormwater from solid or construction waste by providing designated waste collection areas and containers, arranging for regular disposal, and training employees and subcontractors.

Suitable Applications

This BMP is suitable for construction sites where the following wastes are generated or stored:

- Solid waste generated from trees and shrubs removed during land clearing, demolition of existing structures (rubble), and building construction
- Packaging materials including wood, paper, and plastic
- Scrap or surplus building materials including scrap metals, rubber, plastic, glass pieces, and masonry products
- Domestic wastes including food containers such as beverage cans, coffee cups, paper bags, plastic wrappers, and cigarettes
- Construction wastes including brick, mortar, timber, steel and metal scraps, pipe and electrical cuttings, non-hazardous equipment parts, styrofoam and other materials used to transport and package construction materials
- Highway planting wastes, including vegetative material,

CASQA
CALIFORNIA STORMWATER QUALITY ASSOCIATION

plant containers, and packaging materials

Limitations

Temporary stockpiling of certain construction wastes may not necessitate stringent drainage related controls during the non-rainy season or in desert areas with low rainfall.

Implementation

The following steps will help keep a clean site and reduce stormwater pollution:

- Select designated waste collection areas onsite.
- Inform trash-hauling contractors that you will accept only watertight dumpsters for onsite use. Inspect dumpsters for leaks and repair any dumpster that is not watertight.
- Locate containers in a covered area or in a secondary containment.
- Provide an adequate number of containers with lids or covers that can be placed over the container to keep rain out or to prevent loss of wastes when it is windy.
- Cover waste containers at the end of each work day and when it is raining.
- Plan for additional containers and more frequent pickup during the demolition phase of construction.
- Collect site trash daily, especially during rainy and windy conditions.
- Remove this solid waste promptly since erosion and sediment control devices tend to collect litter.
- Make sure that toxic liquid wastes (used oils, solvents, and paints) and chemicals (acids, pesticides, additives, curing compounds) are not disposed of in dumpsters designated for construction debris.
- Do not hose out dumpsters on the construction site. Leave dumpster cleaning to the trash hauling contractor.
- Arrange for regular waste collection before containers overflow.
- Clean up immediately if a container does spill.
- Make sure that construction waste is collected, removed, and disposed of only at authorized disposal areas.

Education

- Have the contractor's superintendent or representative oversee and enforce proper solid waste management procedures and practices.
- Instruct employees and subcontractors on identification of solid waste and hazardous waste.
- Educate employees and subcontractors on solid waste storage and disposal procedures.

- Hold regular meetings to discuss and reinforce disposal procedures (incorporate into regular safety meetings).
- Require that employees and subcontractors follow solid waste handling and storage procedures.
- Prohibit littering by employees, subcontractors, and visitors.
- Minimize production of solid waste materials wherever possible.

Collection, Storage, and Disposal

- Littering on the project site should be prohibited.
- To prevent clogging of the storm drainage system, litter and debris removal from drainage grates, trash racks, and ditch lines should be a priority.
- Trash receptacles should be provided in the contractor's yard, field trailer areas, and at locations where workers congregate for lunch and break periods.
- Litter from work areas within the construction limits of the project site should be collected and placed in watertight dumpsters at least weekly, regardless of whether the litter was generated by the contractor, the public, or others. Collected litter and debris should not be placed in or next to drain inlets, stormwater drainage systems, or watercourses.
- Dumpsters of sufficient size and number should be provided to contain the solid waste generated by the project.
- Full dumpsters should be removed from the project site and the contents should be disposed of by the trash hauling contractor.
- Construction debris and waste should be removed from the site biweekly or more frequently as needed.
- Construction material visible to the public should be stored or stacked in an orderly manner.
- Stormwater runon should be prevented from contacting stored solid waste through the use of berms, dikes, or other temporary diversion structures or through the use of measures to elevate waste from site surfaces.
- Solid waste storage areas should be located at least 50 ft from drainage facilities and watercourses and should not be located in areas prone to flooding or ponding.
- Except during fair weather, construction and highway planting waste not stored in watertight dumpsters should be securely covered from wind and rain by covering the waste with tarps or plastic.
- Segregate potentially hazardous waste from non-hazardous construction site waste.
- Make sure that toxic liquid wastes (used oils, solvents, and paints) and chemicals (acids, pesticides, additives, curing compounds) are not disposed of in dumpsters designated for construction debris.

- For disposal of hazardous waste, see WM-6, Hazardous Waste Management. Have hazardous waste hauled to an appropriate disposal and/or recycling facility.
- Salvage or recycle useful vegetation debris, packaging and surplus building materials when practical. For example, trees and shrubs from land clearing can be used as a brush barrier, or converted into wood chips, then used as mulch on graded areas. Wood pallets, cardboard boxes, and construction scraps can also be recycled.

Costs

All of the above are low cost measures.

Inspection and Maintenance

- Inspect and verify that activity–based BMPs are in place prior to the commencement of associated activities. While activities associated with the BMP are under way, inspect BMPs in accordance with General Permit requirements for the associated project type and risk level. It is recommended that at a minimum, BMPs be inspected weekly, prior to forecasted rain events, daily during extended rain events, and after the conclusion of rain events.
- Inspect BMPs subject to non-stormwater discharge daily while non-stormwater discharges occur
- Inspect construction waste area regularly.
- Arrange for regular waste collection.

References

Processes, Procedures and Methods to Control Pollution Resulting from All Construction Activity, 430/9-73-007, USEPA, 1973.

Stormwater Quality Handbooks - Construction Site Best Management Practices (BMPs) Manual, State of California Department of Transportation (Caltrans), November 2000.

Stormwater Management for Construction Activities; Developing Pollution Prevention Plans and Best Management Practice, EPA 832-R-92005; USEPA, April 1992.

Hazardous Waste Management WM-6

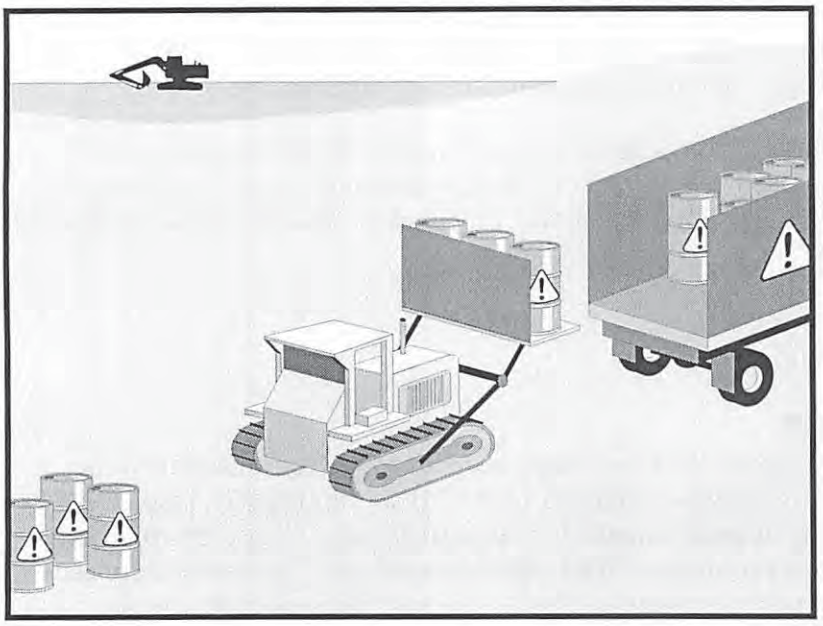

Categories

EC	Erosion Control	
SE	Sediment Control	
TC	Tracking Control	
WE	Wind Erosion Control	
NS	Non-Stormwater Management Control	
WM	Waste Management and Materials Pollution Control	☑

Legend:

☑ **Primary Objective**

☒ **Secondary Objective**

Targeted Constituents

Sediment	
Nutrients	☑
Trash	☑
Metals	☑
Bacteria	☑
Oil and Grease	☑
Organics	☑

Potential Alternatives

None

Description and Purpose

Prevent or reduce the discharge of pollutants to stormwater from hazardous waste through proper material use, waste disposal, and training of employees and subcontractors.

Suitable Applications

This best management practice (BMP) applies to all construction projects. Hazardous waste management practices are implemented on construction projects that generate waste from the use of:

- Petroleum Products
- Concrete Curing Compounds
- Palliatives
- Septic Wastes
- Stains
- Wood Preservatives
- Asphalt Products
- Pesticides
- Acids
- Paints
- Solvents
- Roofing Tar
- Any materials deemed a hazardous waste in California, Title 22 Division 4.5, or listed in 40 CFR Parts 110, 117, 261, or 302

CASQA
CALIFORNIA STORMWATER QUALITY ASSOCIATION

In addition, sites with existing structures may contain wastes, which must be disposed of in accordance with federal, state, and local regulations. These wastes include:

- Sandblasting grit mixed with lead-, cadmium-, or chromium-based paints
- Asbestos
- PCBs (particularly in older transformers)

Limitations

- Hazardous waste that cannot be reused or recycled must be disposed of by a licensed hazardous waste hauler.
- Nothing in this BMP relieves the contractor from responsibility for compliance with federal, state, and local laws regarding storage, handling, transportation, and disposal of hazardous wastes.
- This BMP does not cover aerially deposited lead (ADL) soils. For ADL soils refer to WM-7, Contaminated Soil Management.

Implementation

The following steps will help reduce stormwater pollution from hazardous wastes:

Material Use

- Wastes should be stored in sealed containers constructed of a suitable material and should be labeled as required by Title 22 CCR, Division 4.5 and 49 CFR Parts 172, 173, 178, and 179.
- All hazardous waste should be stored, transported, and disposed as required in Title 22 CCR, Division 4.5 and 49 CFR 261-263.
- Waste containers should be stored in temporary containment facilities that should comply with the following requirements:
  - Temporary containment facility should provide for a spill containment volume equal to 1.5 times the volume of all containers able to contain precipitation from a 25 year storm event, plus the greater of 10% of the aggregate volume of all containers or 100% of the capacity of the largest tank within its boundary, whichever is greater.
  - Temporary containment facility should be impervious to the materials stored there for a minimum contact time of 72 hours.
  - Temporary containment facilities should be maintained free of accumulated rainwater and spills. In the event of spills or leaks, accumulated rainwater and spills should be placed into drums after each rainfall. These liquids should be handled as a hazardous waste unless testing determines them to be non-hazardous. Non-hazardous liquids should be sent to an approved disposal site.
  - Sufficient separation should be provided between stored containers to allow for spill cleanup and emergency response access.

- Incompatible materials, such as chlorine and ammonia, should not be stored in the same temporary containment facility.
- Throughout the rainy season, temporary containment facilities should be covered during non-working days, and prior to rain events. Covered facilities may include use of plastic tarps for small facilities or constructed roofs with overhangs.

- Drums should not be overfilled and wastes should not be mixed.
- Unless watertight, containers of dry waste should be stored on pallets.
- Do not over-apply herbicides and pesticides. Prepare only the amount needed. Follow the recommended usage instructions. Over application is expensive and environmentally harmful. Apply surface dressings in several smaller applications, as opposed to one large application. Allow time for infiltration and avoid excess material being carried offsite by runoff. Do not apply these chemicals just before it rains. People applying pesticides must be certified in accordance with federal and state regulations.
- Paint brushes and equipment for water and oil based paints should be cleaned within a contained area and should not be allowed to contaminate site soils, watercourses, or drainage systems. Waste paints, thinners, solvents, residues, and sludges that cannot be recycled or reused should be disposed of as hazardous waste. When thoroughly dry, latex paint and paint cans, used brushes, rags, absorbent materials, and drop cloths should be disposed of as solid waste.
- Do not clean out brushes or rinse paint containers into the dirt, street, gutter, storm drain, or stream. "Paint out" brushes as much as possible. Rinse water-based paints to the sanitary sewer. Filter and reuse thinners and solvents. Dispose of excess oil-based paints and sludge as hazardous waste.
- The following actions should be taken with respect to temporary contaminant:
  - Ensure that adequate hazardous waste storage volume is available.
  - Ensure that hazardous waste collection containers are conveniently located.
  - Designate hazardous waste storage areas onsite away from storm drains or watercourses and away from moving vehicles and equipment to prevent accidental spills.
  - Minimize production or generation of hazardous materials and hazardous waste on the job site.
  - Use containment berms in fueling and maintenance areas and where the potential for spills is high.
  - Segregate potentially hazardous waste from non-hazardous construction site debris.
  - Keep liquid or semi-liquid hazardous waste in appropriate containers (closed drums or similar) and under cover.

- Clearly label all hazardous waste containers with the waste being stored and the date of accumulation.
- Place hazardous waste containers in secondary containment.
- Do not allow potentially hazardous waste materials to accumulate on the ground.
- Do not mix wastes.
- Use all of the product before disposing of the container.
- Do not remove the original product label; it contains important safety and disposal information.

Waste Recycling Disposal

- Select designated hazardous waste collection areas onsite.
- Hazardous materials and wastes should be stored in covered containers and protected from vandalism.
- Place hazardous waste containers in secondary containment.
- Do not mix wastes, this can cause chemical reactions, making recycling impossible and complicating disposal.
- Recycle any useful materials such as used oil or water-based paint.
- Make sure that toxic liquid wastes (used oils, solvents, and paints) and chemicals (acids, pesticides, additives, curing compounds) are not disposed of in dumpsters designated for construction debris.
- Arrange for regular waste collection before containers overflow.
- Make sure that hazardous waste (e.g., excess oil-based paint and sludge) is collected, removed, and disposed of only at authorized disposal areas.

Disposal Procedures

- Waste should be disposed of by a licensed hazardous waste transporter at an authorized and licensed disposal facility or recycling facility utilizing properly completed Uniform Hazardous Waste Manifest forms.
- A Department of Health Services certified laboratory should sample waste to determine the appropriate disposal facility.
- Properly dispose of rainwater in secondary containment that may have mixed with hazardous waste.
- Attention is directed to "Hazardous Material", "Contaminated Material", and "Aerially Deposited Lead" of the contract documents regarding the handling and disposal of hazardous materials.

Education

- Educate employees and subcontractors on hazardous waste storage and disposal procedures.
- Educate employees and subcontractors on potential dangers to humans and the environment from hazardous wastes.
- Instruct employees and subcontractors on safety procedures for common construction site hazardous wastes.
- Instruct employees and subcontractors in identification of hazardous and solid waste.
- Hold regular meetings to discuss and reinforce hazardous waste management procedures (incorporate into regular safety meetings).
- The contractor's superintendent or representative should oversee and enforce proper hazardous waste management procedures and practices.
- Make sure that hazardous waste is collected, removed, and disposed of only at authorized disposal areas.
- Warning signs should be placed in areas recently treated with chemicals.
- Place a stockpile of spill cleanup materials where it will be readily accessible.
- If a container does spill, clean up immediately.

Costs

All of the above are low cost measures.

Inspection and Maintenance

- Inspect and verify that activity–based BMPs are in place prior to the commencement of associated activities. While activities associated with the BMP are under way, inspect BMPs in accordance with General Permit requirements for the associated project type and risk level. It is recommended that at a minimum, BMPs be inspected weekly, prior to forecasted rain events, daily during extended rain events, and after the conclusion of rain events..
- Inspect BMPs subject to non-stormwater discharge daily while non-stormwater discharges occur
- Hazardous waste should be regularly collected.
- A foreman or construction supervisor should monitor onsite hazardous waste storage and disposal procedures.
- Waste storage areas should be kept clean, well organized, and equipped with ample cleanup supplies as appropriate for the materials being stored.
- Perimeter controls, containment structures, covers, and liners should be repaired or replaced as needed to maintain proper function.

- Hazardous spills should be cleaned up and reported in conformance with the applicable Material Safety Data Sheet (MSDS) and the instructions posted at the project site.
- The National Response Center, at (800) 424-8802, should be notified of spills of federal reportable quantities in conformance with the requirements in 40 CFR parts 110, 117, and 302. Also notify the Governors Office of Emergency Services Warning Center at (916) 845-8911.
- A copy of the hazardous waste manifests should be provided.

References

Blueprint for a Clean Bay: Best Management Practices to Prevent Stormwater Pollution from Construction Related Activities; Santa Clara Valley Nonpoint Source Pollution Control Program, 1995.

Processes, Procedures and Methods to Control Pollution Resulting from All Construction Activity, 430/9-73-007, USEPA, 1973.

Stormwater Quality Handbooks - Construction Site Best Management Practices (BMPs) Manual, State of California Department of Transportation (Caltrans), November 2000.

Stormwater Management for Construction Activities; Developing Pollution Prevention Plans and Best Management Practice, EPA 832-R-92005; USEPA, April 1992.

Contaminated Soil Management WM-7

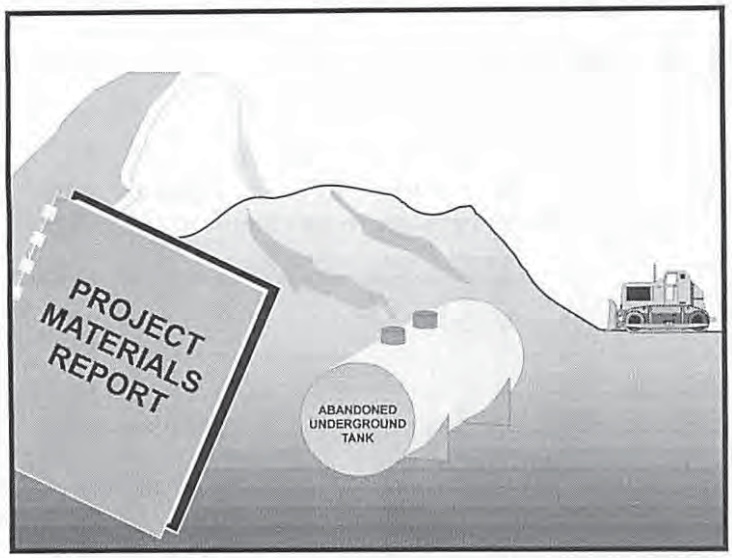

Categories

EC	Erosion Control	
SE	Sediment Control	
TC	Tracking Control	
WE	Wind Erosion Control	
NS	Non-Stormwater Management Control	
WM	Waste Management and Materials Pollution Control	☑

Legend:

☑ **Primary Objective**

☒ **Secondary Objective**

Description and Purpose

Prevent or reduce the discharge of pollutants to stormwater from contaminated soil and highly acidic or alkaline soils by conducting pre-construction surveys, inspecting excavations regularly, and remediating contaminated soil promptly.

Suitable Applications

Contaminated soil management is implemented on construction projects in highly urbanized or industrial areas where soil contamination may have occurred due to spills, illicit discharges, aerial deposition, past use and leaks from underground storage tanks.

Limitations

Contaminated soils that cannot be treated onsite must be disposed of offsite by a licensed hazardous waste hauler. The presence of contaminated soil may indicate contaminated water as well. See NS-2, Dewatering Operations, for more information.

The procedures and practices presented in this BMP are general. The contractor should identify appropriate practices and procedures for the specific contaminants known to exist or discovered onsite.

Implementation

Most owners and developers conduct pre-construction environmental assessments as a matter of routine. Contaminated soils are often identified during project planning and development with known locations identified in the plans, specifications and in the SWPPP. The contractor should review applicable reports and investigate appropriate call-outs in the

Targeted Constituents

Sediment	
Nutrients	☑
Trash	☑
Metals	☑
Bacteria	☑
Oil and Grease	☑
Organics	☑

Potential Alternatives

None

CASQA
CALIFORNIA STORMWATER QUALITY ASSOCIATION

plans, specifications, and SWPPP. Recent court rulings holding contractors liable for cleanup costs when they unknowingly move contaminated soil highlight the need for contractors to confirm a site assessment is completed before earth moving begins.

The following steps will help reduce stormwater pollution from contaminated soil:

- Conduct thorough, pre-construction inspections of the site and review documents related to the site. If inspection or reviews indicated presence of contaminated soils, develop a plan before starting work.
- Look for contaminated soil as evidenced by discoloration, odors, differences in soil properties, abandoned underground tanks or pipes, or buried debris.
- Prevent leaks and spills. Contaminated soil can be expensive to treat and dispose of properly. However, addressing the problem before construction is much less expensive than after the structures are in place.
- The contractor may further identify contaminated soils by investigating:
  - Past site uses and activities
  - Detected or undetected spills and leaks
  - Acid or alkaline solutions from exposed soil or rock formations high in acid or alkaline forming elements
  - Contaminated soil as evidenced by discoloration, odors, differences in soil properties, abandoned underground tanks or pipes, or buried debris.
  - Suspected soils should be tested at a certified laboratory.

Education

- Have employees and subcontractors complete a safety training program which meets 29 CFR 1910.120 and 8 CCR 5192 covering the potential hazards as identified, prior to performing any excavation work at the locations containing material classified as hazardous.
- Educate employees and subcontractors in identification of contaminated soil and on contaminated soil handling and disposal procedures.
- Hold regular meetings to discuss and reinforce disposal procedures (incorporate into regular safety meetings).

Handling Procedures for Material with Aerially Deposited Lead (ADL)

- Materials from areas designated as containing (ADL) may, if allowed by the contract special provisions, be excavated, transported, and used in the construction of embankments and/or backfill.
- Excavation, transportation, and placement operations should result in no visible dust.
- Caution should be exercised to prevent spillage of lead containing material during transport.

- Quality should be monitored during excavation of soils contaminated with lead.

Handling Procedures for Contaminated Soils

- Minimize onsite storage. Contaminated soil should be disposed of properly in accordance with all applicable regulations. All hazardous waste storage will comply with the requirements in Title 22, CCR, Sections 66265.250 to 66265.260.
- Test suspected soils at an approved certified laboratory.
- Work with the local regulatory agencies to develop options for treatment or disposal if the soil is contaminated.
- Avoid temporary stockpiling of contaminated soils or hazardous material.
- Take the following precautions if temporary stockpiling is necessary:
  - Cover the stockpile with plastic sheeting or tarps.
  - Install a berm around the stockpile to prevent runoff from leaving the area.
  - Do not stockpile in or near storm drains or watercourses.
- Remove contaminated material and hazardous material on exteriors of transport vehicles and place either into the current transport vehicle or into the excavation prior to the vehicle leaving the exclusion zone.
- Monitor the air quality continuously during excavation operations at all locations containing hazardous material.
- Procure all permits and licenses, pay all charges and fees, and give all notices necessary and incident to the due and lawful prosecution of the work, including registration for transporting vehicles carrying the contaminated material and the hazardous material.
- Collect water from decontamination procedures and treat or dispose of it at an appropriate disposal site.
- Collect non-reusable protective equipment, once used by any personnel, and dispose of at an appropriate disposal site.
- Install temporary security fence to surround and secure the exclusion zone. Remove fencing when no longer needed.
- Excavate, transport, and dispose of contaminated material and hazardous material in accordance with the rules and regulations of the following agencies (the specifications of these agencies supersede the procedures outlined in this BMP):
  - United States Department of Transportation (USDOT)
  - United States Environmental Protection Agency (USEPA)
  - California Environmental Protection Agency (CAL-EPA)

- California Division of Occupation Safety and Health Administration (CAL-OSHA)
- Local regulatory agencies

Procedures for Underground Storage Tank Removals

- Prior to commencing tank removal operations, obtain the required underground storage tank removal permits and approval from the federal, state, and local agencies that have jurisdiction over such work.
- To determine if it contains hazardous substances, arrange to have tested, any liquid or sludge found in the underground tank prior to its removal.
- Following the tank removal, take soil samples beneath the excavated tank and perform analysis as required by the local agency representative(s).
- The underground storage tank, any liquid or sludge found within the tank, and all contaminated substances and hazardous substances removed during the tank removal and transported to disposal facilities permitted to accept such waste.

Water Control

- All necessary precautions and preventive measures should be taken to prevent the flow of water, including ground water, from mixing with hazardous substances or underground storage tank excavations. Such preventative measures may consist of, but are not limited to, berms, cofferdams, grout curtains, freeze walls, and seal course concrete or any combination thereof.
- If water does enter an excavation and becomes contaminated, such water, when necessary to proceed with the work, should be discharged to clean, closed top, watertight transportable holding tanks, treated, and disposed of in accordance with federal, state, and local laws.

Costs

Prevention of leaks and spills is inexpensive. Treatment or disposal of contaminated soil can be quite expensive.

Inspection and Maintenance

- Inspect and verify that activity–based BMPs are in place prior to the commencement of associated activities. While activities associated with the BMP are under way, inspect BMPs in accordance with General Permit requirements for the associated project type and risk level. It is recommended that at a minimum, BMPs be inspected weekly, prior to forecasted rain events, daily during extended rain events, and after the conclusion of rain events.
- Arrange for contractor's Water Pollution Control Manager, foreman, and/or construction supervisor to monitor onsite contaminated soil storage and disposal procedures.
- Monitor air quality continuously during excavation operations at all locations containing hazardous material.
- Coordinate contaminated soils and hazardous substances/waste management with the appropriate federal, state, and local agencies.

- Implement WM-4, Spill Prevention and Control, to prevent leaks and spills as much as possible.

References

Blueprint for a Clean Bay: Best Management Practices to Prevent Stormwater Pollution from Construction Related Activities; Santa Clara Valley Nonpoint Source Pollution Control Program, 1995.

Processes, Procedures and Methods to Control Pollution Resulting from All Construction Activity, 430/9-73-007, USEPA, 1973.

Stormwater Quality Handbooks - Construction Site Best Management Practices (BMPs) Manual, State of California Department of Transportation (Caltrans), November 2000.

Stormwater Management for Construction Activities; Developing Pollution Prevention Plans and Best Management Practice, EPA 832-R-92005; USEPA, April 1992.

Concrete Waste Management WM-8

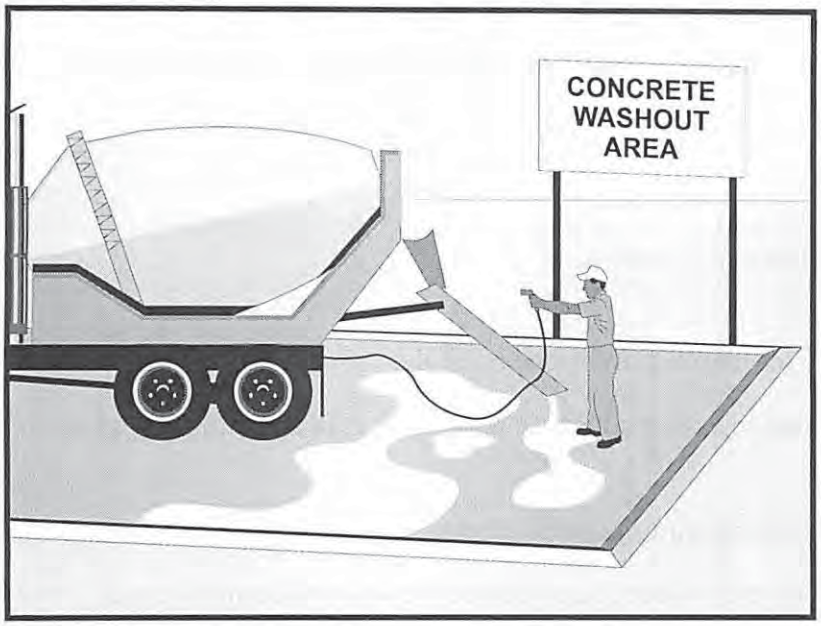

Categories

EC	Erosion Control	
SE	Sediment Control	
TC	Tracking Control	
WE	Wind Erosion Control	
NS	Non-Stormwater Management Control	☒
WM	Waste Management and Materials Pollution Control	☑

Legend:

☑ **Primary Category**

☒ **Secondary Category**

Targeted Constituents

Sediment	☑
Nutrients	
Trash	
Metals	☑
Bacteria	
Oil and Grease	
Organics	

Potential Alternatives

None

Description and Purpose

Prevent the discharge of pollutants to stormwater from concrete waste by conducting washout onsite or offsite in a designated area, and by employee and subcontractor training.

The General Permit incorporates Numeric Effluent Limits (NEL) and Numeric Action Levels (NAL) for pH (see Section 2 of this handbook to determine your project's risk level and if you are subject to these requirements).

Many types of construction materials, including mortar, concrete, stucco, cement and block and their associated wastes have basic chemical properties that can raise pH levels outside of the permitted range. Additional care should be taken when managing these materials to prevent them from coming into contact with stormwater flows and raising pH to levels outside the accepted range.

Suitable Applications

Concrete waste management procedures and practices are implemented on construction projects where:

- Concrete is used as a construction material or where concrete dust and debris result from demolition activities.
- Slurries containing portland cement concrete (PCC) are generated, such as from saw cutting, coring, grinding, grooving, and hydro-concrete demolition.

CASQA
CALIFORNIA STORMWATER QUALITY ASSOCIATION

- Concrete trucks and other concrete-coated equipment are washed onsite.
- Mortar-mixing stations exist.
- Stucco mixing and spraying .
- See also NS-8, Vehicle and Equipment Cleaning.

Limitations

- Offsite washout of concrete wastes may not always be possible.
- Multiple washouts may be needed to assure adequate capacity and to allow for evaporation.

Implementation

The following steps will help reduce stormwater pollution from concrete wastes:

- Incorporate requirements for concrete waste management into material supplier and subcontractor agreements.
- Store dry and wet materials under cover, away from drainage areas. Refer to WM-1, Material Delivery and Storage for more information.
- Avoid mixing excess amounts of concrete.
- Perform washout of concrete trucks in designated areas only, where washout will not reach stormwater.
- Do not wash out concrete trucks into storm drains, open ditches, streets, streams or onto the ground. Trucks should always be washed out into designated facilities.
- Do not allow excess concrete to be dumped onsite, except in designated areas.
- For onsite washout:
  - On larger sites, it is recommended to locate washout areas at least 50 feet from storm drains, open ditches, or water bodies. Do not allow runoff from this area by constructing a temporary pit or bermed area large enough for liquid and solid waste.
  - Washout wastes into the temporary washout where the concrete can set, be broken up, and then disposed properly.
  - Washout should be lined so there is no discharge into the underlying soil.
- Do not wash sweepings from exposed aggregate concrete into the street or storm drain. Collect and return sweepings to aggregate base stockpile or dispose in the trash.
- See typical concrete washout installation details at the end of this fact sheet.

Education

- Educate employees, subcontractors, and suppliers on the concrete waste management techniques described herein.

- Arrange for contractor's superintendent or representative to oversee and enforce concrete waste management procedures.
- Discuss the concrete management techniques described in this BMP (such as handling of concrete waste and washout) with the ready-mix concrete supplier before any deliveries are made.

Concrete Demolition Wastes

- Stockpile concrete demolition waste in accordance with BMP WM-3, Stockpile Management.
- Dispose of or recycle hardened concrete waste in accordance with applicable federal, state or local regulations.

Concrete Slurry Wastes

- PCC and AC waste should not be allowed to enter storm drains or watercourses.
- PCC and AC waste should be collected and disposed of or placed in a temporary concrete washout facility (as described in Onsite Temporary Concrete Washout Facility, Concrete Transit Truck Washout Procedures, below).
- A foreman or construction supervisor should monitor onsite concrete working tasks, such as saw cutting, coring, grinding and grooving to ensure proper methods are implemented.
- Saw-cut concrete slurry should not be allowed to enter storm drains or watercourses. Residue from grinding operations should be picked up by means of a vacuum attachment to the grinding machine or by sweeping. Saw cutting residue should not be allowed to flow across the pavement and should not be left on the surface of the pavement. See also NS-3, Paving and Grinding Operations; and WM-10, Liquid Waste Management.
- Concrete slurry residue should be disposed in a temporary washout facility (as described in Onsite Temporary Concrete Washout Facility, Concrete Transit Truck Washout Procedures, below) and allowed to dry. Dispose of dry slurry residue in accordance with WM-5, Solid Waste Management.

Onsite Temporary Concrete Washout Facility, Transit Truck Washout Procedures

- Temporary concrete washout facilities should be located a minimum of 50 ft from storm drain inlets, open drainage facilities, and watercourses. Each facility should be located away from construction traffic or access areas to prevent disturbance or tracking.
- A sign should be installed adjacent to each washout facility to inform concrete equipment operators to utilize the proper facilities.
- Temporary concrete washout facilities should be constructed above grade or below grade at the option of the contractor. Temporary concrete washout facilities should be constructed and maintained in sufficient quantity and size to contain all liquid and concrete waste generated by washout operations.

- Temporary washout facilities should have a temporary pit or bermed areas of sufficient volume to completely contain all liquid and waste concrete materials generated during washout procedures.
- Temporary washout facilities should be lined to prevent discharge to the underlying ground or surrounding area.
- Washout of concrete trucks should be performed in designated areas only.
- Only concrete from mixer truck chutes should be washed into concrete wash out.
- Concrete washout from concrete pumper bins can be washed into concrete pumper trucks and discharged into designated washout area or properly disposed of or recycled offsite.
- Once concrete wastes are washed into the designated area and allowed to harden, the concrete should be broken up, removed, and disposed of per WM-5, Solid Waste Management. Dispose of or recycle hardened concrete on a regular basis.
- Temporary Concrete Washout Facility (Type Above Grade)
  - Temporary concrete washout facility (type above grade) should be constructed as shown on the details at the end of this BMP, with a recommended minimum length and minimum width of 10 ft; however, smaller sites or jobs may only need a smaller washout facility. With any washout, always maintain a sufficient quantity and volume to contain all liquid and concrete waste generated by washout operations.
  - Materials used to construct the washout area should conform to the provisions detailed in their respective BMPs (e.g., SE-8 Sandbag Barrier).
  - Plastic lining material should be a minimum of 10 mil in polyethylene sheeting and should be free of holes, tears, or other defects that compromise the impermeability of the material.
  - Alternatively, portable removable containers can be used as above grade concrete washouts. Also called a "roll-off"; this concrete washout facility should be properly sealed to prevent leakage, and should be removed from the site and replaced when the container reaches 75% capacity.
- Temporary Concrete Washout Facility (Type Below Grade)
  - Temporary concrete washout facilities (type below grade) should be constructed as shown on the details at the end of this BMP, with a recommended minimum length and minimum width of 10 ft. The quantity and volume should be sufficient to contain all liquid and concrete waste generated by washout operations.
  - Lath and flagging should be commercial type.
  - Plastic lining material should be a minimum of 10 mil polyethylene sheeting and should be free of holes, tears, or other defects that compromise the impermeability of the material.

- The base of a washout facility should be free of rock or debris that may damage a plastic liner.

Removal of Temporary Concrete Washout Facilities

- When temporary concrete washout facilities are no longer required for the work, the hardened concrete should be removed and properly disposed or recycled in accordance with federal, state or local regulations. Materials used to construct temporary concrete washout facilities should be removed from the site of the work and properly disposed or recycled in accordance with federal, state or local regulations..

- Holes, depressions or other ground disturbance caused by the removal of the temporary concrete washout facilities should be backfilled and repaired.

Costs

All of the above are low cost measures. Roll-off concrete washout facilities can be more costly than other measures due to removal and replacement; however, provide a cleaner alternative to traditional washouts. The type of washout facility, size, and availability of materials will determine the cost of the washout.

Inspection and Maintenance

- BMPs must be inspected in accordance with General Permit requirements for the associated project type and risk level. It is recommended that at a minimum, BMPs be inspected weekly, prior to forecasted rain events, daily during extended rain events, and after the conclusion of rain events.

- Temporary concrete washout facilities should be maintained to provide adequate holding capacity with a minimum freeboard of 4 in. for above grade facilities and 12 in. for below grade facilities. Maintaining temporary concrete washout facilities should include removing and disposing of hardened concrete and returning the facilities to a functional condition. Hardened concrete materials should be removed and properly disposed or recycled in accordance with federal, state or local regulations.

- Washout facilities must be cleaned, or new facilities must be constructed and ready for use once the washout is 75% full.

- Inspect washout facilities for damage (e.g. torn liner, evidence of leaks, signage, etc.). Repair all identified damage.

References

Blueprint for a Clean Bay: Best Management Practices to Prevent Stormwater Pollution from Construction Related Activities; Santa Clara Valley Nonpoint Source Pollution Control Program, 1995.

Stormwater Quality Handbooks - Construction Site Best Management Practices (BMPs) Manual, State of California Department of Transportation (Caltrans), November 2000, Updated March 2003.

Stormwater Management for Construction Activities; Developing Pollution Prevention Plans and Best Management Practice, EPA 832-R-92005; USEPA, April 1992.

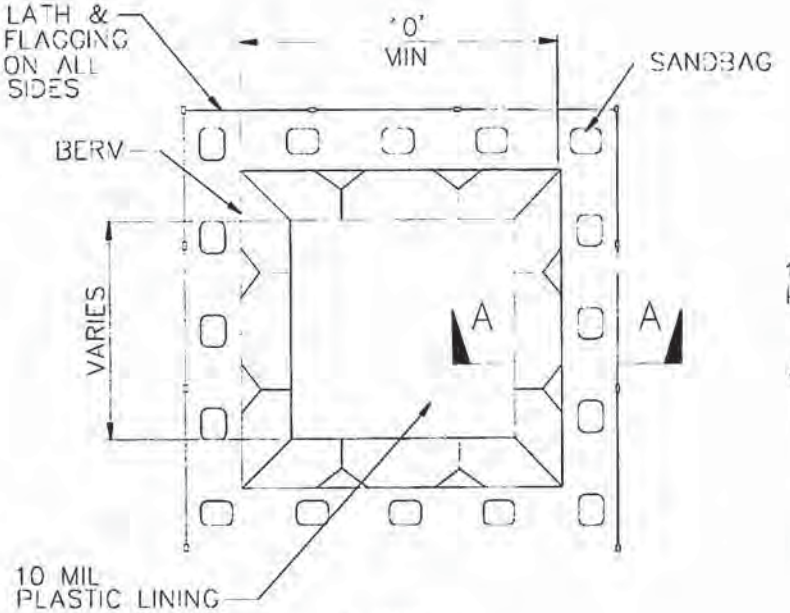

PLAN
NOT TO SCALE
TYPE "BELOW GRADE"

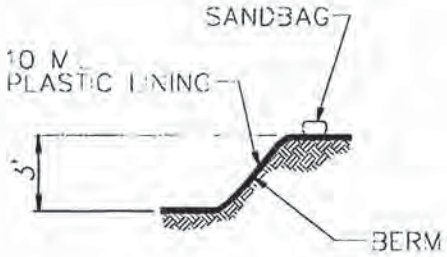

SECTION A–A
NOT TO SCALE

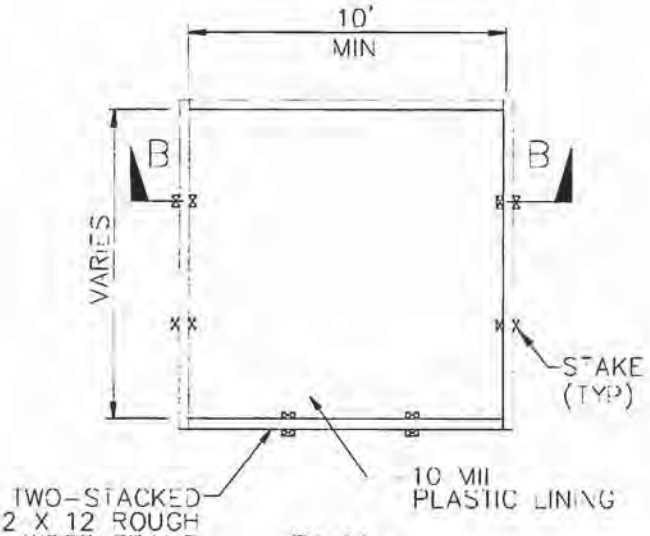

PLAN
NOT TO SCALE
TYPE "ABOVE GRADE"

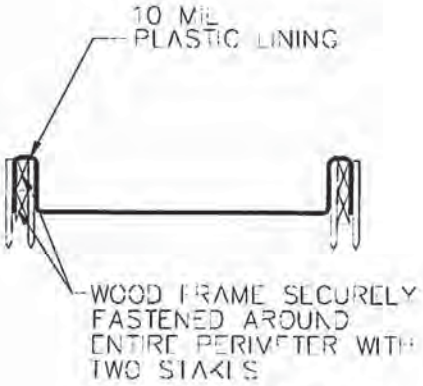

SECTION B–B
NOT TO SCALE

NOTES

1. ACTUAL LAYOUT DETERMINED IN FIELD.
2. THE CONCRETE WASHOUT SIGN SHALL BE INSTALLED WITHIN 30 FT. OF THE TEMPORARY CONCRETE WASHOUT FACILITY.

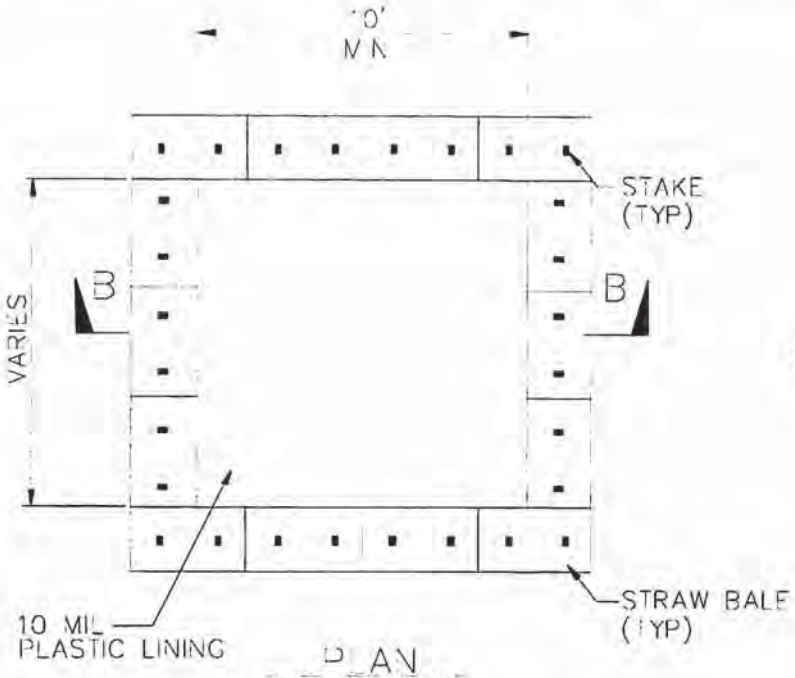

PLAN
NOT TO SCALE
TYPE "ABOVE GRADE"
WITH STRAW BALES

STAPLE DETAIL

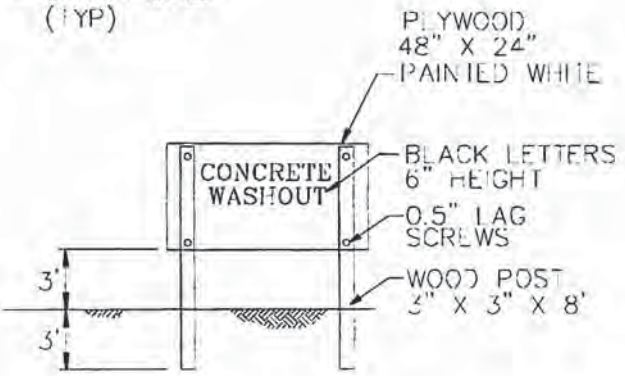

CONCRETE WASHOUT
SIGN DETAIL
(OR EQUIVALENT)

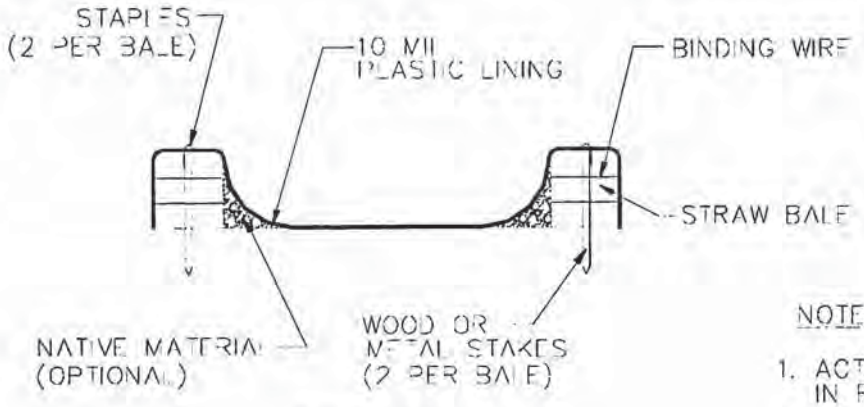

SECTION B B
NOT TO SCALE

NOTES

1. ACTUAL LAYOUT DETERMINED IN FIELD.
2. THE CONCRETE WASHOUT SIGN SHALL BE INSTALLED WITHIN 30 FT. OF THE TEMPORARY CONCRETE WASHOUT FACILITY.

Sanitary/Septic Waste Management WM-9

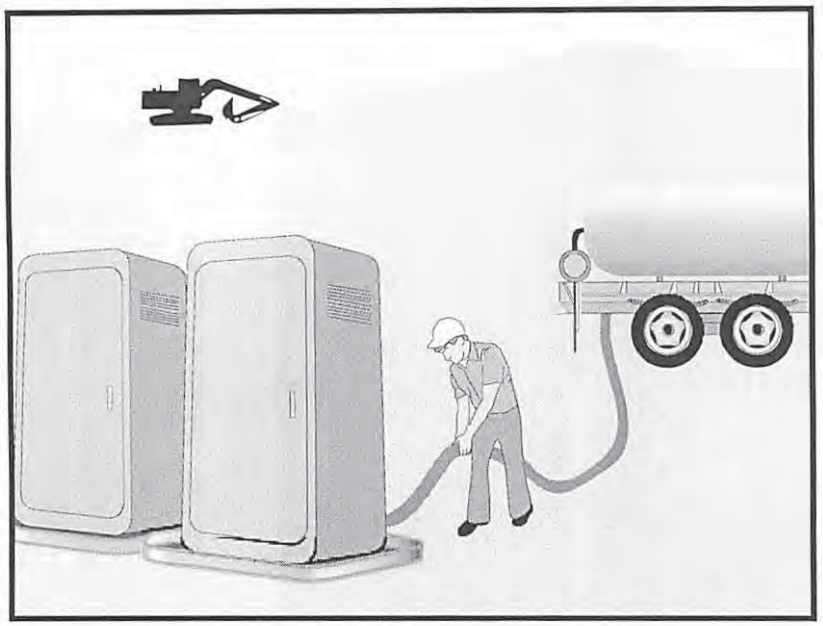

Categories

EC	Erosion Control	
SE	Sediment Control	
TC	Tracking Control	
WE	Wind Erosion Control	
NS	Non-Stormwater Management Control	
WM	Waste Management and Materials Pollution Control	☑

Legend:

☑ **Primary Category**

☒ **Secondary Category**

Targeted Constituents

Sediment	
Nutrients	☑
Trash	☑
Metals	
Bacteria	☑
Oil and Grease	
Organics	☑

Potential Alternatives

None

Description and Purpose

Proper sanitary and septic waste management prevent the discharge of pollutants to stormwater from sanitary and septic waste by providing convenient, well-maintained facilities, and arranging for regular service and disposal.

Suitable Applications

Sanitary septic waste management practices are suitable for use at all construction sites that use temporary or portable sanitary and septic waste systems.

Limitations

None identified.

Implementation

Sanitary or septic wastes should be treated or disposed of in accordance with state and local requirements. In many cases, one contract with a local facility supplier will be all that it takes to make sure sanitary wastes are properly disposed.

Storage and Disposal Procedures

- Temporary sanitary facilities should be located away from drainage facilities, watercourses, and from traffic circulation. If site conditions allow, place portable facilities a minimum of 50 feet from drainage conveyances and traffic areas. When subjected to high winds or risk of high winds, temporary sanitary facilities should be secured to prevent overturning.

CASQA
CALIFORNIA STORMWATER QUALITY ASSOCIATION

- Temporary sanitary facilities must be equipped with containment to prevent discharge of pollutants to the stormwater drainage system of the receiving water.
- Consider safety as well as environmental implications before placing temporary sanitary facilities.
- Wastewater should not be discharged or buried within the project site.
- Sanitary and septic systems that discharge directly into sanitary sewer systems, where permissible, should comply with the local health agency, city, county, and sewer district requirements.
- Only reputable, licensed sanitary and septic waste haulers should be used.
- Sanitary facilities should be located in a convenient location.
- Temporary septic systems should treat wastes to appropriate levels before discharging.
- If using an onsite disposal system (OSDS), such as a septic system, local health agency requirements must be followed.
- Temporary sanitary facilities that discharge to the sanitary sewer system should be properly connected to avoid illicit discharges.
- Sanitary and septic facilities should be maintained in good working order by a licensed service.
- Regular waste collection by a licensed hauler should be arranged before facilities overflow.
- If a spill does occur from a temporary sanitary facility, follow federal, state and local regulations for containment and clean-up.

Education

- Educate employees, subcontractors, and suppliers on sanitary and septic waste storage and disposal procedures.
- Educate employees, subcontractors, and suppliers of potential dangers to humans and the environment from sanitary and septic wastes.
- Instruct employees, subcontractors, and suppliers in identification of sanitary and septic waste.
- Hold regular meetings to discuss and reinforce the use of sanitary facilities (incorporate into regular safety meetings).
- Establish a continuing education program to indoctrinate new employees.

Costs

All of the above are low cost measures.

Inspection and Maintenance

- BMPs must be inspected in accordance with General Permit requirements for the associated project type and risk level. It is recommended that at a minimum, BMPs be inspected weekly, prior to forecasted rain events, daily during extended rain events, and after the conclusion of rain events.
- Arrange for regular waste collection.
- If high winds are expected, portable sanitary facilities must be secured with spikes or weighed down to prevent over turning.
- If spills or leaks from sanitary or septic facilities occur that are not contained and discharge from the site, non-visible sampling of site discharge may be required. Refer to the General Permit or to your project specific Construction Site Monitoring Plan to determine if and where sampling is required.

References

Stormwater Quality Handbooks - Construction Site Best Management Practices (BMPs) Manual, State of California Department of Transportation (Caltrans), March 2003.

Stormwater Management for Construction Activities; Developing Pollution Prevention Plans and Best Management Practice, EPA 832-R-92005; USEPA, April 1992.

Liquid Waste Management WM-10

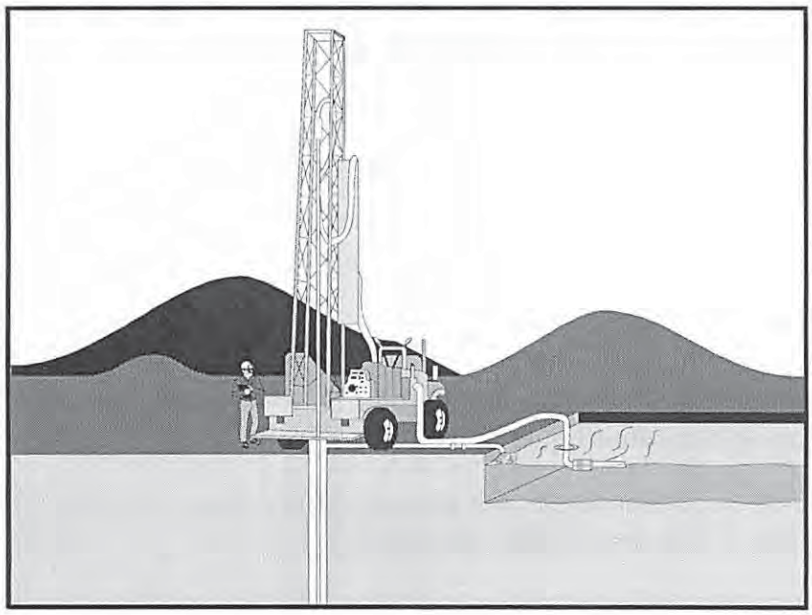

Categories		
EC	Erosion Control	
SE	Sediment Control	
TC	Tracking Control	
WE	Wind Erosion Control	
NS	Non-Stormwater Management Control	
WM	Waste Management and Materials Pollution Control	☑

Legend:

☑ **Primary Objective**

☒ **Secondary Objective**

Targeted Constituents	
Sediment	☑
Nutrients	☑
Trash	☑
Metals	☑
Bacteria	
Oil and Grease	☑
Organics	

Potential Alternatives

None

Description and Purpose

Liquid waste management includes procedures and practices to prevent discharge of pollutants to the storm drain system or to watercourses as a result of the creation, collection, and disposal of non-hazardous liquid wastes.

Suitable Applications

Liquid waste management is applicable to construction projects that generate any of the following non-hazardous by-products, residuals, or wastes:

- Drilling slurries and drilling fluids
- Grease-free and oil-free wastewater and rinse water
- Dredgings
- Other non-stormwater liquid discharges not permitted by separate permits

Limitations

- Disposal of some liquid wastes may be subject to specific laws and regulations or to requirements of other permits secured for the construction project (e.g., NPDES permits, Army Corps permits, Coastal Commission permits, etc.).
- Liquid waste management does not apply to dewatering operations (NS-2 Dewatering Operations), solid waste management (WM-5, Solid Waste Management), hazardous wastes (WM-6, Hazardous Waste Management), or concrete slurry residue (WM-8, Concrete Waste

CASQA
CALIFORNIA STORMWATER

Management).

- Typical permitted non-stormwater discharges can include: water line flushing; landscape irrigation; diverted stream flows; rising ground waters; uncontaminated pumped ground water; discharges from potable water sources; foundation drains; irrigation water; springs; water from crawl space pumps; footing drains; lawn watering; flows from riparian habitats and wetlands; and discharges or flows from emergency fire fighting activities.

Implementation

General Practices

- Instruct employees and subcontractors how to safely differentiate between non-hazardous liquid waste and potential or known hazardous liquid waste.
- Instruct employees, subcontractors, and suppliers that it is unacceptable for any liquid waste to enter any storm drainage device, waterway, or receiving water.
- Educate employees and subcontractors on liquid waste generating activities and liquid waste storage and disposal procedures.
- Hold regular meetings to discuss and reinforce disposal procedures (incorporate into regular safety meetings).
- Verify which non-stormwater discharges are permitted by the statewide NPDES permit; different regions might have different requirements not outlined in this permit.
- Apply NS-8, Vehicle and Equipment Cleaning for managing wash water and rinse water from vehicle and equipment cleaning operations.

Containing Liquid Wastes

- Drilling residue and drilling fluids should not be allowed to enter storm drains and watercourses and should be disposed of.
- If an appropriate location is available, drilling residue and drilling fluids that are exempt under Title 23, CCR § 2511(g) may be dried by infiltration and evaporation in a containment facility constructed in conformance with the provisions concerning the Temporary Concrete Washout Facilities detailed in WM-8, Concrete Waste Management.
- Liquid wastes generated as part of an operational procedure, such as water-laden dredged material and drilling mud, should be contained and not allowed to flow into drainage channels or receiving waters prior to treatment.
- Liquid wastes should be contained in a controlled area such as a holding pit, sediment basin, roll-off bin, or portable tank.
- Containment devices must be structurally sound and leak free.
- Containment devices must be of sufficient quantity or volume to completely contain the liquid wastes generated.

- Precautions should be taken to avoid spills or accidental releases of contained liquid wastes. Apply the education measures and spill response procedures outlined in WM-4, Spill Prevention and Control.

- Containment areas or devices should not be located where accidental release of the contained liquid can threaten health or safety or discharge to water bodies, channels, or storm drains.

Capturing Liquid Wastes

- Capture all liquid wastes that have the potential to affect the storm drainage system (such as wash water and rinse water from cleaning walls or pavement), before they run off a surface.

- Do not allow liquid wastes to flow or discharge uncontrolled. Use temporary dikes or berms to intercept flows and direct them to a containment area or device for capture.

- Use a sediment trap (SE-3, Sediment Trap) for capturing and treating sediment laden liquid waste or capture in a containment device and allow sediment to settle.

Disposing of Liquid Wastes

- A typical method to handle liquid waste is to dewater the contained liquid waste, using procedures such as described in NS-2, Dewatering Operations, and SE-2, Sediment Basin, and dispose of resulting solids per WM-5, Solid Waste Management.

- Methods of disposal for some liquid wastes may be prescribed in Water Quality Reports, NPDES permits, Environmental Impact Reports, 401 or 404 permits, and local agency discharge permits, etc. Review the SWPPP to see if disposal methods are identified.

- Liquid wastes, such as from dredged material, may require testing and certification whether it is hazardous or not before a disposal method can be determined.

- For disposal of hazardous waste, see WM-6, Hazardous Waste Management.

- If necessary, further treat liquid wastes prior to disposal. Treatment may include, though is not limited to, sedimentation, filtration, and chemical neutralization.

Costs

Prevention costs for liquid waste management are minimal. Costs increase if cleanup or fines are involved.

Inspection and Maintenance

- Inspect and verify that activity–based BMPs are in place prior to the commencement of associated activities. While activities associated with the BMP are under way, inspect weekly during the rainy season and of two-week intervals in the non-rainy season to verify continued BMP implementation.

- Inspect BMPs subject to non-stormwater discharge daily while non-stormwater discharges occur.

- Remove deposited solids in containment areas and capturing devices as needed and at the completion of the task. Dispose of any solids as described in WM-5, Solid Waste Management.
- Inspect containment areas and capturing devices and repair as needed.

References

Stormwater Quality Handbooks - Construction Site Best Management Practices (BMPs) Manual, State of California Department of Transportation (Caltrans), November 2000.

Appendix I: BMP Inspection Form

BMP INSPECTION REPORT

Date and Time of Inspection:		Date Report Written:		
Inspection Type: (Circle one)	Weekly *Complete Parts I,II,III and VII*	Pre-Storm *Complete Parts I,II,III,IV and VII*	During Rain Event *Complete Parts I, II, III, V, and VII*	Post-Storm *Complete Parts I,II,III,VI and VII*

Part I. General Information

Site Information

Construction Site Name: Los Osos Wastewater Collection System			
Construction stage and completed activities:			Approximate area of site that is exposed:
Photos Taken: (Circle one)	Yes		Photo Reference IDs:

Weather

Estimate storm beginning: (date and time)	Estimate storm duration: (hours)
Estimate time since last storm: (days or hours)	Rain gauge reading and location: (in)

Is a "Qualifying Event" predicted or did one occur (i.e., 0.5" rain with 48-hrs or greater between events)? (Y/N)
If yes, summarize forecast:

Exemption Documentation (explanation required if inspection could not be conducted). Visual inspections are not required outside of business hours or during dangerous weather conditions such as flooding or electrical storms.

Inspector Information

Inspector Name:	Inspector Title:
Signature:	Date:

Part II. BMP Observations. Describe deficiencies in Part III.

Minimum BMPs for LUP Type 2 Sites	Failures or other short comings (yes, no, N/A)	Action Required (yes/no)	Action Implemented (Date)
Good Housekeeping for Construction Materials			
Inventory of products (excluding materials designed to be outdoors)			
Stockpiled construction materials not actively in use are covered and bermed			
All chemicals are stored in watertight containers with appropriate secondary containment, or in a completely enclosed storage shed			
Construction materials are minimally exposed to precipitation			
BMPs preventing the off-site tracking of materials are implemented and properly effective			
Good Housekeeping for Waste Management			
Wash/rinse water and materials are prevented from being disposed into the storm drain system			
Portable toilets are contained to prevent discharges of waste			
Sanitation facilities are clean and with no apparent for leaks and spills			
Equipment is in place to cover waste disposal containers at the end of business day and during rain events			
Discharges from waste disposal containers are prevented from discharging to the storm drain system / receiving water			
Stockpiled waste material is securely protected from wind and rain if not actively in use			
Procedures are in place for addressing hazardous and non-hazardous spills			
Appropriate spill response personnel are assigned and trained			
Equipment and materials for cleanup of spills is available onsite			
Washout areas (e.g., concrete) are contained appropriately to prevent discharge or infiltration into the underlying soil			
Good Housekeeping for Vehicle Storage and Maintenance			
Measures are in place to prevent oil, grease, or fuel from leaking into the ground, storm drains, or surface waters			
All equipment or vehicles are fueled, maintained, and stored in a designated area with appropriate BMPs			
Vehicle and equipment leaks are cleaned immediately and disposed of properly			

Part II. BMP Observations Continued. Describe deficiencies in Part III.			
Minimum BMPs for LUP Type 2 Sites	Adequately designed, implemented and effective	Action Required (yes/no)	Action Implemented (Date)

	(yes, no, N/A)		
Good Housekeeping for Landscape Materials			
Stockpiled landscape materials such as mulches and topsoil are contained and covered when not actively in use			
Erodible landscape material has not been applied 2 days before a forecasted rain event or during an event			
Erodible landscape materials are applied at quantities and rates in accordance with manufacturer recommendations			
Bagged erodible landscape materials are stored on pallets and covered			
Good Housekeeping for Air Deposition of Site Materials			
Good housekeeping measures are implemented onsite to control the air deposition of site materials and from site operations			
Non-Stormwater Management			
Non-Stormwater discharges are properly controlled			
Vehicles are washed in a manner to prevent non-stormwater discharges to surface waters or drainage systems			
Streets are cleaned in a manner to prevent unauthorized non-stormwater discharges to surface waters or drainage systems.			
Erosion Controls			
Wind erosion controls are effectively implemented			
Effective soil cover is provided for disturbed areas inactive (i.e., not scheduled to be disturbed for 14 days) as well as finished slopes, open space, utility backfill, and completed lots			
The use of plastic materials is limited in cases when a more sustainable, environmentally friendly alternative exists.			
Sediment Controls			
Perimeter controls are established and effective at controlling erosion and sediment discharges from the site			
Entrances and exits are stabilized to control erosion and sediment discharges from the site			
Sediment basins are properly maintained			
Linear sediment control along toe of slope, face of slope an at grade breaks (LUP Type 2)			
Limit construction activity to and from site to entrances and exits that employ effective controls to prevent offsite tracking (LUP Type 2)			
Ensure all storm, drain inlets and perimeter controls, runoff control BMPs and pollutants controls at entrances and exits are maintained and protected from activities the reduce their effectiveness (LUP Type 2)			
Inspect all immediate access roads daily (LUP Type 2)			
Run-On and Run-Off Controls			
Run-on to the site is effectively managed and directed away			

from all disturbed areas.			
Other			
Are the project SWPPP and BMP plan up to date, available on-site and being properly implemented?			

Part III. Descriptions of BMP Deficiencies

Deficiency	Repairs Implemented: Note - Repairs must begin within 72 hours of identification and, complete repairs as soon as possible.	
	Start Date	**Action**
1.		
2.		
3.		
4.		

Part IV. Additional Pre-Storm Observations. Note the presence or absence of floating and suspended materials, sheen, discoloration, turbidity, odors, and source(s) of pollutants(s).

	Yes, No, N/A
Do stormwater storage and containment areas have adequate freeboard? If no, complete Part III.	
Are drainage areas free of spills, leaks, or uncontrolled pollutant sources? If no, complete Part VII and describe below.	
Notes:	
Are stormwater storage and containment areas free of leaks? If no, complete Parts III and/or VII and describe below.	
Notes:	

Part V. Additional During Storm Observations. **If BMPs cannot be inspected during inclement weather, list the results of visual inspections at all relevant outfalls, discharge points, and downstream locations. Note odors or visible sheen on the surface of discharges. Complete Part VII (Corrective Actions) as needed.**	
Outfall, Discharge Point, or Other Downstream Location	
Location	Description
Location	Description
Location	Description
Location	Description
Location	Description
Location	Description
Location	Description
Location	Description

Part VI. Additional Post-Storm Observations. **Visually observe (inspect) stormwater discharges at all discharge locations within two business days (48 hours) after each qualifying rain event, and observe (inspect) the discharge of stored or contained stormwater that is derived from and discharged subsequent to a qualifying rain event producing precipitation of ½ inch or more at the time of discharge. Complete Part VII (Corrective Actions) as needed.**	
Discharge Location, Storage or Containment Area	**Visual Observation**

Part VII. Additional Corrective Actions Required. **Identify additional corrective actions not included with BMP Deficiencies (Part III) above. Note if SWPPP change is required.**

Required Actions	Implementation Date

Appendix J: Project Specific Rain Event Action Plan NOT USED

Trained Contractor Personnel Log

Stormwater Management Training Log and Documentation

Project Name: Los Osos Wastewater Collection System Area
WDID #: _____

Stormwater Management Topic: (check as appropriate)

☐ Erosion Control
☐ Sediment Control
☐ Wind Erosion Control
☐ Tracking Control
☐ Non-Stormwater Management
☐ Waste Management and Materials Pollution Control
☐ Stormwater Sampling

Specific Training Objective: _____

Location: _____ Date: _____

Instructor:_____ Telephone: _____

Course Length (hours): _____

Attendee Roster (Attach additional forms if necessary)

Name	Company	Phone

As needed, add proof of external training (e.g., course completion certificates, credentials for QSP, QSD).

Appendix L: Responsible Parties

Authorization of Approved Signatories

Project Name: Los Osos Wastewater Collection System Area A, B, C, D

WDID #: _____

Name of Personnel	Project Role	Company	Signature	Date
David Flynn	LRP	County of San Luis Obispo		

_____ _____

LRP's Signature Date

_____ _____

LRP Name and Title Telephone Number

Identification of QSP

Area A-D

Project Name: _____

WDID #: _____

The following are QSPs associated with this project

Name of Personnel(1)	Company	Date

(1) If additional QSPs are required on the job site add additional lines and include information here

Area B-C

Project Name: _____

WDID #: _____

The following are QSPs associated with this project

Name of Personnel(1)	Company	Date

(1) If additional QSPs are required on the job site add additional lines and include information here

Pump Station

Project Name: _____

WDID #: _____

The following are QSPs associated with this project

Name of Personnel(1)	Company	Date

(1) If additional QSPs are required on the job site add additional lines and include information here

Authorization of Data Submitters

Project Name: Los Osos Wastewater Collection System

WDID #: _____

Name of Personnel	Project Role	Company	Signature	Date
Robert W. Carnes	QSD# 00161	Ground Up Design & CM, Inc.		

_____ _____

Approved Signatory's Signature Date

_____ _____

Approved Signatory Telephone Number

Name and Title

Appendix M:Contractors and Subcontractors

CONTRACTOR SHALL NOTIFY ALL SUBCONTRACTORS AND SUPPLIERS OF SWPPP REQUIREMENTS AND PROVIDE A LOG OF NOTIFICATION:

Appendix N: Construction General Permit

THE CONSTRUCTION GENERAL PERMIT IS AVAILABLE ON THE WEB AT:
http://www.swrcb.ca.gov/water_issues/programs/stormwater/constpermits.shtml

Appendix O: RWQCB Letter Dewatering

California Regional Water Quality Control Board
Central Coast Region

Linda S. Adams
Acting Secretary for Environmental Protection

895 Aerovista Place, Suite 101, San Luis Obispo, California 93401-7906
(805) 549-3147 • Fax (805) 543-0397
http://www.waterboards.ca.gov/centralcoast

Edmund G. Brown Jr.
Governor

May 27, 2011

Mr. John Waddell
County of San Luis Obispo, Public Works Department
County Government Center, Room 207
San Luis Obispo, CA 93408

Dear Mr. Waddell:

USE AND DISPOSAL PLAN FOR CONSTRUCTION DEWATERING, LOS OSOS PROJECT

The purpose of this letter is to clarify issues related to the use and disposal of water generated by dewatering during the construction of San Luis Obispo County's Los Osos Water Recycling Facility Project (Project). As discussed previously, construction dewatering is authorized under the statewide *General Permit for Storm Water Discharges Associated with Construction Activities (General Permit)*, provided such discharges comply with the permit conditions and best management practices (BMPs) to protect water quality. To enroll under the General Permit, create an account in the Stormwater Multiple Application and Report Tracking System (SMARTS) at:

https://smarts.waterboards.ca.gov/smarts/faces/SwSmartsLogin.jsp

Once registered in SMARTS, the legally responsible person or his or her authorized signatory or data submitter must electronically submit permit registration documents prior to commencing construction activities. The County must develop a construction dewatering plan to address all items described in this letter related to Project dewatering activities. The County must include this plan in the project Storm Water Pollution Prevention Plan (SWPPP). The County shall adhere to all other requirements related to Project construction activities pursuant to the General Permit. The following information is intended as guidance in developing and implementing BMPs in your SWPPP and construction bid documents.

Central Coast Water Board staff has determined that water generated by Project dewatering activities is an authorized non-stormwater discharge under the General Permit provided that the following conditions are satisfied:

1. The discharge does not cause or contribute to a violation of any water quality standard;

2. The discharge does not violate any other provision of the General Permit;

3. The discharge is not prohibited by the Central Coast Water Board Basin Plan;

4. The County has included and implemented specific BMPs required by the General Permit to prevent or reduce the contact of groundwater from dewatering with construction materials or equipment.

5. The discharge does not contain toxic constituents in toxic amounts or (other) significant quantities of pollutants;

6. The discharge is monitored and meets the applicable Numeric Action Limits and Numeric Effluent Limits (General Permit, V. Effluent Standards); and

7. The County reports the sampling information in an annual report.

Considering analytical results of samples collected by the Los Osos Community Services District (CSD) and Central Coast Water Board staff, we anticipate that bacteria, sediment, nitrate, and ammonia are constituents of concern to water quality. However, we have also taken into consideration that dewatering activities will be short-term and necessary for construction of the Project. Each of the constituents of concern is described below, followed by applicable water quality objectives, the basis for specified requirements, and actions needed to protect against, minimize, and mitigate for potential water quality impacts associated with construction dewatering activities. Compliance with the applicable water quality objectives (below) constitutes compliance with the aforementioned conditions for authorized non-stormwater discharge pursuant to Section III of the General Permit.

Discharge Minimization – Use and disposal of water generated by construction dewatering to land (i.e., compaction, dust control, irrigation, percolation, etc.) is the primary BMP to ensure water quality protection. The County must dispose of construction dewatering to land whenever feasible. The alternative disposal options described below are applicable only after the Central Coast Water Board agrees that land disposal options are infeasible. Feasibility considerations include, but are not limited to, project delay, environmental impacts, technical, and cost considerations.

Bacteria – Due to the proximity of septic systems to dewatering intakes, bacteria may be present in the discharge in excess of water quality objectives. A wide variety of coliform bacteria are naturally prevalent in soil, so, because of the source, fecal coliform bacteria are the most appropriate indicator of human pathogens. Accordingly, dewatering discharges must not cause receiving waters to exceed water quality objectives for fecal coliform bacteria of 14 most probable number per 100 milliliters

(MPN/100ml) median and no more than ten percent of samples exceeding 43 MPN/100ml. These objectives are based upon protection of the shellfish harvesting beneficial uses of the receiving waters[1]. Basin Plan criteria for protection of body-contact recreation beneficial uses of receiving waters are also applicable, but are less stringent than the shellfish objectives above. Body-contact recreation criteria for fecal coliform bacteria include 200 MPN/100ml log mean and no more than ten percent of samples exceeding 400 MPN/100ml. If disinfection of the discharge is implemented using chlorine, residual chlorine must be removed prior to discharge into surface waters. Representative samples of construction dewatering discharges must be collected and analyzed for fecal coliform bacteria weekly while dewatering discharges continue.

Sediment – Our understanding of the proposed dewatering procedure is that shallow groundwater will be extracted from the soil rather than directly from the trench, although occasional pumping from trenches may be needed. Based upon this information, we do not anticipate excess sediment to be an issue of concern for water quality. However, discharges should be free of sediment concentrations that result in deposition or concentration of material that causes nuisance or adversely affects beneficial uses. Also, the discharge velocity should be diminished and conveyed to channels (rather than exposed mudflats) to minimize disturbance of bay sediments. This objective is based upon Basin Plan general objectives for all inland surface waters, enclosed bays and estuaries. Representative samples of construction dewatering discharges must be collected and analyzed for turbidity weekly while dewatering discharges continue. Compliance with the following effluent limitations[2] satisfies effluent standards in Section V.B. of the General Permit.

Table 1 – Turbidity Effluent Limitations

Parameter	Test Method	Discharge Type	Min. Detection Limit	Units	Numeric Action Level	Numeric Effluent Limitation
Turbidity	EPA 0180.1 and /or field test with calibrated portable instrument	Risk Level 2[1]	1.0	NTU	250 NTU	N/A
		Risk Level 3[1]			250 NTU	500 NTU

1 – Risk level will be determined by staff pursuant to Section VIII of the General Permit.
NTUs - Nephelometric Turbidity Units
N/A – not applicable
EPA –Environmental Protection Agency

[1] Morro Bay Pathogen TMDL, Resolution No. R3-2002-0117
[2] Table obtained from Section V.B., Table 1 of the Construction Stormwater General Permit Order No. 2009-0009-DWQ.

pH – According to October 2006 groundwater quality data for the Los Osos upper aquifer, pH ranges from 5.9 to 7.2[3]. In order to protect warm freshwater, cold freshwater, and ocean water habitats, pH shall not be depressed below 7.0 or raised above 8.5, and any change in normal ambient pH shall not exceed 0.5 in fresh waters[4]. pH can vary greatly in receiving waters (diurnal and annual fluctuations). Therefore, Section V.B. of the General Permit provides effluent limitations protective of surface water beneficial uses. Representative samples of construction dewatering discharges shall be collected and analyzed monthly for pH while dewatering occurs. Compliance with the following effluent limitations[5] satisfies Section V.B. of the General Permit..

Table 2 – ph Effluent Limitations

Parameter	Test Method	Discharge Type	Min. Detection Limit	Units	Numeric Action Level (NAL)	Numeric Effluent Limitation (NEL)
pH	Field test with calibrated portable instrument	Risk Level 2[1]	0.2	s.u.	Lower NAL= 6.5 Upper NAL= 8.5	N/A
		Risk Level 3[1]			Lower NAL= 6.5 Upper NAL= 8.5	Lower NEL= 6.0 Upper NEL= 9.0

s.u. – pH standard units

Nitrate – The Basin Plan does not have a water quality objective for nitrate specific to Morro Bay Estuary. However, as a biostimulatory substance, nitrate and other nitrogen-containing compounds may contribute to algal blooms resulting in water quality impairment. Algal blooms due to the discharge are prohibited. Therefore, dewatering discharges should be conveyed close to actively flowing channels in order to minimize accumulation of nutrients in shallow waters.

Ammonia – Due to septic system effluent discharges to shallow groundwater, water generated by construction dewatering may contain concentrations of ammonia that could be toxic to marine organisms. Construction dewatering discharges shall not cause receiving water concentrations of total ammonia to exceed 24 milligrams per liter as nitrogen (mg/L as N) in freshwater and 21 mg/L as N in Morro Bay. These criteria

[3] Table 3 - Los Osos Nitrate Monitoring Program, Los Osos Community Services District, Cleath and Associates, October 2006
[4] Pursuant to Section II.A.1 and Section II.A.2 of the Basin Plan
[5] Table obtained from Section V.B., Table 1 of the Construction Stormwater General Permit Order No. 2009-0009-DWQ.

are based upon USEPA ambient water quality criteria for waters with pH of 7[6]. If monitoring indicates a pH value above 7, then more stringent ammonia criteria may apply. In addition, according to Section II.A.2 of the Basin Plan, the discharge shall not cause concentrations of un-ionized ammonia (NH_3) to exceed 0.025 mg/L in the receiving water (i.e., inland surface waters, enclosed bays, and estuaries). If the ammonia concentrations exceeds 24 mg/L (freshwater) or 21 mg/L (Morro Bay) and the pH value is above 7 when dewatering, then follow-up receiving water sampling for temperature and salinity is required. Representative samples of construction dewatering discharges shall be collected and analyzed monthly for ammonia and pH while dewatering occurs.

Monitoring, Reporting, and Notifications - The water quality objectives described above are for receiving waters. This means that compliance with the specified objective is measured in the receiving water rather than the discharge. However, due to the variability of receiving water quality and conditions, compliance monitoring must be implemented by representative sampling of the discharge. If discharge samples reveal concentrations in excess of water quality objectives, then follow-up sampling of receiving water must be implemented to verify compliance with the appropriate receiving water objectives. Throughout Project construction, monthly monitoring reports must be submitted summarizing bacteria, turbidity, pH, and ammonia monitoring data; estimated volume of dewatering discharges; time, date and location of dewatering and location of discharge. If monitoring results indicate noncompliance with criteria described above, then Central Coast Water Board staff must be notified immediately (via email or telephone). Additionally, monthly reports must include a description of corrective actions and a corresponding schedule for implementation.

SUMMARY OF DISCHARGE & MONITORING REQUIREMENTS

Parameter	Water Quality Objective	Monitoring Frequency
Discharge Minimization	Alternatives Feasibility Evaluation	Advance Approval
Volume & Location	Recorded for each surface water discharge	Ongoing
Fecal Coliform Bacteria	14 MPN/100ml median	Weekly
	No more than 10% exceed 43 MPN/100ml	
Turbidity	250 NTU (NAL)	Weekly
	500 NTU (NEL)	
pH	6.5 to 8.5 (NAL)[1]	Monthly

[6] U.S. Environmental Protection Agency, Office of Water, National Recommended Water Quality Criteria 2002, EPA 822-R-02-047

	6.0 to 9.0 (NEL)[1]	
Ammonia	24 mg/l (as N)[1]	Monthly
Un-ionized Ammonia	0.025 mg/L (as N)	Calculated Monthly
Temperature	35 degrees C	Triggered if pH is above 7
Salinity	20 g/kg	Triggered if pH is above 7
Summary Reports	Discharge & Compliance Summary	Monthly

1 - If monitoring indicates a pH value above 7, then more stringent ammonia criteria may apply.
MPN/100ml – most probable number per 100 milliliters
NTUs - Nephelometric Turbidity Units
NAL – Numeric Action Level
NEL – Numeric Effluent Limitation
mg/L – milligrams per liter
g/kg – grams per kilogram

We look forward to completion of the Los Osos Water Recycling Facility Project as soon as possible to prevent further degradation of water quality due to septic system discharges and we are available to assist County staff if needed to facilitate project completion. If you have questions, please call **David LaCaro at (805) 549-3892 or by email dlacaro@waterboards.ca.gov.**

Sincerely,

Harvey Packard for

Harvey Packard

Digitally signed by Harvey Packard
DN: cn=Harvey Packard, o=California Regional Water Quality Control Board, ou=Central Coast Region, email=hpackard@waterboards.ca.gov, c=US
Date: 2011.05.27 14:39:06 -07'00'

Roger W. Briggs
Executive Officer

cc:

Paavo Ogren, SLO County Public Works Director (pogren@co.slo.ca.us)
Mark Hutchinson, SLO County Environmental Manager (mhutchinson@co.slo.ca.us)
Jon Bishop, California Coastal Commission (jbishop@coastal.ca.gov)
Kurt Souza, Department of Public Health (Kurt.Souza@cdph.ca.gov)
Kyle Ochenduzko, SWRCB DFA (KOchenduszko@waterboards.ca.gov)
Dan Gilmore, Los Osos CSD (dgilmore@losososcsd.org)

s:\seniors\shared\wdr\wdr facilities\san luis obispo co\los osos\general\lowrf dewater ltr (052711) final.doc

California Environmental Protection Agency

Recycled Paper

STORMWATER POLLUTION PREVENTION PLAN

for

Los Osos Wastewater Collection System
Broderson Leach Field

RISK LEVEL ***2***

Legally Responsible Person [LRP):
County of San Luis Obispo
Deputy Public Works Director
David Flynn
805-781-5252

Approved Signatory:

Prepared for: County of San Luis Obispo
County Government Center
San Luis Obispo, Ca.

Project Address:
South End of Broderson Ave., Los Osos, California

SWPPP Prepared by:
Ground Up Design & Construction Management, Inc.
P.O. Box 1583, Paso Robles, Ca. 93447
Robert W. Carnes, CPESC 5454, QSD 00161

SWPPP Preparation Date
February 1, 2012

Estimated Project Dates:

Start of Construction	**April 1**	Completion of Construction	**October 15**

Table of Contents

Copyright Statement i
Table of Contents i
Qualified SWPPP Developer 1
Legally Responsible Person 2
Amendment Log 3
Section 1 SWPPP Requirements 4
1.1 Introduction 4
1.2 Permit Registration Documents 4
1.3 SWPPP Availability and Implementation 5
1.4 SWPPP Amendments 5
1.5 Retention of Records 7
1.6 Required Non-Compliance Reporting 8
1.7 Annual Report 8
1.8 Changes to Permit Coverage 9
1.9 Notice of Termination 9
Section 2 Project Information 10
2.1 Project and Site Description 10
2.1.1 Site Description 10
2.1.2 Existing Conditions 10
2.1.3 Existing Drainage 10
2.1.4 Geology and Groundwater 10
2.1.5 Project Description 11
2.2 Permits and Governing Documents 11
2.3 Stormwater Run-On from Offsite Areas 12
2.4 Findings of the Construction Site Sediment and Receiving Water Risk Determination 12
2.5 Construction Schedule 14
2.6 Potential Construction Activity and Pollutant Sources 14
2.7 Identification of Non-Stormwater Discharges 15
2.8 Required Site Map Information 16
Section 3 Best Management Practices 17

3.1 Schedule for BMP Implementation 17
3.2 Erosion and Sediment Control 18
3.2.1 Erosion Control 19
3.2.2 Sediment Controls 22
3.3 Non-Stormwater Controls and Waste and Materials Management 25
3.3.1 Non-Stormwater Controls 25
3.3.2 Materials Management and Waste Management 28
3.4 Post construction Stormwater Management Measures 31
Section 4 BMP Inspection, Maintenance, and Rain Event Action Plans 32
4.1 BMP Inspection and Maintenance 32
4.2 Rain Event Action Plans 32
Section 5 Training 34
Section 6 Responsible Parties and Operators 35
6.1 Responsible Parties 35
6.2 Contractor List 36
Section 7 Construction Site Monitoring Program 37
7.1 Purpose 37
7.2 Applicability of Permit Requirements 37
7.3. Weather and Rain Event Tracking 38
7.3.1 Weather Tracking 38
7.3.2 Rain Gauges 38
7.4 Monitoring Locations 38
7.5 Safety and Monitoring Exemptions 39
7.6.1 Routine Observations and Inspections 40
7.6.1.1 Routine BMP Inspections 40
7.6.1.2 Non-Stormwater Discharge Observations 40
7.6.2 Rain-Event Triggered Observations and Inspections 41
7.6.2.1 Visual Observations Prior to a Forecasted Qualifying Rain Event 41
7.6.2.2 BMP Inspections During an Extended Storm Event 41
7.6.2.2 Visual Observations Following a Qualifying Rain Event 42
7.6.3 Visual Monitoring Procedures 42
7.6.4 Visual Monitoring Follow-Up and Reporting 42
7.6.5 Visual Monitoring Locations 43

7.7 Water Quality Sampling and Analysis 44
7.7.1 Sampling and Analysis Plan for Non-Visible Pollutants in Stormwater Runoff Discharges 44
7.7.1.1 Sampling Schedule 45
7.7.1.2 Sampling Locations 46
7.7.1.3 Monitoring Preparation 49
7.7.1.4 Analytical Constituents 50
7.7.1.5 Sample Collection 51
7.7.1.6 Sample Analysis 51
7.7.1.7 Data Evaluation and Reporting 54
7.7.2 Sampling and Analysis Plan for pH and Turbidity in Stormwater Runoff Discharges 54
7.7.2.1 Sampling Schedule 54
7.7.2.2 Sampling Locations 55
7.7.2.3 Monitoring Preparation 55
7.7.2.4 Field Parameters 56
7.7.2.5 Sample Collection 57
7.7.2.6 Field Measurements 57
7.7.2.7 Data Evaluation and Reporting 58
7.7.3 Additional Monitoring Following an NEL Exceedance 58
7.7.4 Sampling and Analysis Plan for Non-Stormwater Discharges 59
7.7.4.1 Sampling Schedule 59
7.7.4.2 Sampling Locations 59
7.7.4.3 Monitoring Preparation 60
7.7.4.4 Analytical Constituents 61
7.7.4.5 Sample Collection 62
7.7.4.6 Sample Analysis 62
7.7.4.7 Data Evaluation and Reporting 62
7.7.5 Sampling and Analysis Plan for Other Pollutants Required by the Regional Water Board 65
7.7.6 Training of Sampling Personnel 65
7.7.7 Sample Collection and Handling 65
7.7.7.1 Sample Collection 65

7.7.7.2 Sample Handling 66
7.7.7.3 Sample Documentation Procedures 67
7.8 Active Treatment System Monitoring 67
7.9 Bioassessment Monitoring 67
7.10 Watershed Monitoring Option 67
7.11 Quality Assurance and Quality Control 67
7.11.1 Field Logs 68
7.11.2 Clean Sampling Techniques 68
7.11.3 Chain of Custody 68
7.11.4 QA/QC Samples 68
7.11.4.1 Field Duplicates 69
7.11.4.2 Equipment Blanks 69
7.11.4.3 Field Blanks 69
7.11.4.4 Travel Blanks 69
7.11.5 Data Verification 69
7.12 Records Retention 70
CSMP Attachment 1: Weather Reports 72
CSMP Attachment 2: Monitoring Records 73
CSMP Attachment 3: Example Forms 74
CSMP Attachment 4: Field Meter Instructions 83
CSMP Attachment 5: Supplemental Information 84
Section 8 References 85
Appendix A: Calculations 86
Appendix B: SWPPP Drawings 87
Appendix C: Permit Registration Documents 88
Appendix D: SWPPP Amendment Certifications 89
Appendix E: Submitted Changes to PRDs 91
Appendix F: Construction Schedule 92
Appendix G: ..... Construction Activities, Materials Used, and Associated Pollutants 93
Appendix H: CASQA Stormwater BMP Handbook Portal: Construction Fact Sheets. 96
CASQA BMPS ARE INCLUDED IN THE LOWWCS LUP TYPE 2 SWPPP. 96
Appendix I: BMP Inspection Form 97

Appendix J: Project Specific Rain Event Action Plan Template **104**
Rain Event Action Plan (REAP) **105**
Date of REAP **105**
WDID Number: **105**
Date Rain Predicted to Occur: **105**
Predicted % chance of rain: **105**
Appendix K: Training Reporting Form **107**
Appendix L: Responsible Parties **108**
Appendix M: Contractors and Subcontractors **111**
CONTRACTOR SHALL NOTIFY ALL SUBCONTRACTORS AND SUPPLIERS OF SWPPP REQUIREMENTS AND PROVIDE A LOG OF NOTIFICATION: 111
Appendix N: Construction General Permit **112**

Qualified SWPPP Developer

Approval and Certification of the Stormwater Pollution Prevention Plan

Project Name:	*Los Osos Wastewater Collection System, Broderson Leach Field*
Project Number/ID	

"This Stormwater Pollution Prevention Plan and Attachments were prepared under my direction to meet the requirements of the California Construction General Permit (SWRCB Orders No. 2009-009-DWQ as amended by Order 2010-0014-DWQ). I certify that I am a Qualified SWPPP Developer in good standing as of the date signed below."

QSD Signature	*Date*
QSD Name	*QSD Certificate Number*
Title and Affiliation	*Telephone Number*
Email	

Legally Responsible Person

Approval and Certification of the Stormwater Pollution Prevention Plan

Project Name: _____

Project Number/ID _____

"I certify under penalty of law that this document and all Attachments were prepared under my direction or supervision in accordance with a system designed to assure that qualified personnel properly gather and evaluate the information submitted. Based on my inquiry of the person or persons who manage the system or those persons directly responsible for gathering the information, to the best of my knowledge and belief, the information submitted is, true, accurate, and complete. I am aware that there are significant penalties for submitting false information, including the possibility of fine and imprisonment for knowing violations."

Dave Flynn

_____

Legally Responsible Person

_____	_____
Signature of Legally Responsible Person or Approved Signatory	Date
Dave Flynn	
_____	_____
Name of Legally Responsible Person or Approved Signatory	Telephone Number

Amendment Log

Project Name: _____

Project Number/ID _____

Amendment No.	**Date**	**Brief Description of Amendment, include section and page number**	**Prepared and Approved By**
			Name: QSD#
			Name: QSD#
			Name: QSD#
			Name: QSD#
			Name: QSD#
			Name: QSD#
			Name: QSD#
			Name: QSD#
			Name: QSD#

Section 1 SWPPP Requirements

1.1 INTRODUCTION

The Broderson Leach Field Project is approximately 7.8 acres and is located at the southerly terminus of Broderson Avenue in the Town of Los Osos, California. The property is owned and being developed by County of San Luis Obispo for the Los Osos Wastewater Collection System Project. The County of SLO is the LRP. The projects location is shown on the Site Map in Appendix B.

This Stormwater Pollution Prevention Plan (SWPPP) is designed to comply with California's General Permit for Stormwater Discharges Associated with Construction and Land Disturbance Activities (General Permit) Order No. 2009-0009-DWQ as amended by Order No. 2010-0014-DWQ (NPDES No. CAS000002) issued by the State Water Resources Control Board (State Water Board). This SWPPP has been prepared following the SWPPP Template provided on the California Stormwater Quality Association Stormwater *Best Management Practice Handbook Portal: Construction* (CASQA, 2010). In accordance with the General Permit, Section XIV, this SWPPP is designed to address the following:

- Pollutants and their sources, including sources of sediment associated with construction, construction site erosion and other activities associated with construction activity are controlled;
- Where not otherwise required to be under a Regional Water Quality Control Board (Regional Water Board) permit, all non-stormwater discharges are identified and either eliminated, controlled, or treated;
- Site BMPs are effective and result in the reduction or elimination of pollutants in stormwater discharges and authorized non-stormwater discharges from construction activity to the Best Available Technology/Best Control Technology (BAT/BCT) standard;

Calculations and design details as well as BMP controls for are complete and correct, Appendix A.

Rain Event Action plans will be implemented on this site in conformance with NPDES and SWPPP requirements and as covered later in this plan.

1.2 PERMIT REGISTRATION DOCUMENTS

Required Permit Registration Documents (PRDs) shall be submitted to the State Water Board via the Stormwater Multi Application and Report Tracking System (SMARTS) by the Legally Responsible Person (LRP), or authorized personnel (i.e., Approved Signatory) under the direction of the LRP. The project-specific PRDs include:

1. Notice of Intent (NOI);

2. Risk Assessment (Construction Site Sediment and Receiving Water Risk Determination);
3. Site Map;
4. Annual Fee;
5. Signed Certification Statement (LRP Certification is provided electronically with SMARTS PRD submittal); and
6. SWPPP.

SWPPP Drawings can be found in Appendix B. A copy of the submitted PRDs shall also be kept in Appendix C along with the Waste Discharge Identification (WDID) confirmation.

Additional PRDs may be required depending on the construction type and location. Modify and include the below test to address items as applicable.

- Discharger is utilizing the soil erodibility factor per the K Factor shown on the Google Application which is in agreement with the information contained in the FUGRO Soils Report which is a part of the Contract Documents.

1.3 SWPPP AVAILABILITY AND IMPLEMENTATION

The discharger shall make the SWPPP available at the construction site during working hours (see Section 7.5 of CSMP for working hours) while construction is occurring and shall be made available upon request by a State or Municipal inspector. When the original SWPPP is retained by a crewmember in a construction vehicle and is not currently at the construction site, current copies of the BMPs and map/drawing will be left with the field crew and the original SWPPP shall be made available via a request by radio/telephone. (CGP Section XIV.C)

The SWPPP shall be implemented concurrently with the start of ground disturbing activities.

1.4 SWPPP AMENDMENTS

The SWPPP should be revised when:

- If there is a General Permit violation.
- When there is a reduction or increase in total disturbed acreage (General Permit Section II Part C).
- BMPs do not meet the objectives of reducing or eliminating pollutants in stormwater discharges.

Additionally, the SWPPP shall be amended when:

- There is a change in construction or operations which may affect the discharge of pollutants to surface waters, groundwater(s), or a municipal separate storm sewer system (MS4);
- When there is a change in the project duration that changes the project's risk level; or
- When deemed necessary by the QSD. The QSD has determined that the changes listed in Table 1.1 can be field determined by the QSP. All other changes shall be made by the QSD as formal amendments to the SWPPP.

The following items shall be included in each amendment:

- Who requested the amendment;
- The location of proposed change;
- The reason for change;
- The original BMP proposed, if any; and
- The new BMP proposed.

Amendment shall be logged at the front of the SWPPP and certification kept in Appendix D. The SWPPP text shall be revised replaced, and/or hand annotated as necessary to properly convey the amendment. SWPPP amendments must be made by a QSD. The following changes have been designated by the QSD as "to be field determined" and constitute minor changes that the QSP may implement based on field conditions.

Table 1.1 List of Changes to be Field Determined

Candidate changes for field location or determination by QSP[1]	Check changes that can be field located or field determined by QSP
Increase quantity of an Erosion or Sediment Control Measure	*X*
Relocate/Add stockpiles or stored materials	*X*
Relocate or add toilets	*X*
Relocate vehicle storage and/or fueling locations	*X*

Table 1.1 List of Changes to be Field Determined

Candidate changes for field location or determination by QSP[1]	Check changes that can be field located or field determined by QSP
Relocate areas for waste storage	*X*
Relocate water storage and/or water transfer location	*X*
Changes to access points (entrance/exits)	*X*
Change type of Erosion or Sediment Control Measure	*X*
Changes to location of erosion or sediment control	*X*
Minor changes to schedule or phases	*X*
Changes in construction materials	*X*
(1) Any field changes not identified for field location or field determination by QSP must be approved by QSD	

1.5 RETENTION OF RECORDS

Paper or electronic records of documents required by this SWPPP shall be retained for a minimum of three years from the date generated or date submitted, whichever is later, for the following items:

- Daily Monitoring Records
- Weekly Inspection and Monitoring Records
- All Sampling and Testing Data
- All Amendments
- SWPPP Plans and Plan Changes
- Annual Report Records
- Notice of Termination Records
- All other documents that the QSD or QSP deem worth keeping.

- All records pertaining to dewatering including monitoring records, plans submittals etc.

These records shall be available at the Site until construction is complete. Records assisting in the determination of compliance with the General Permit shall be made available within a reasonable time, to the Regional Water Board, State Water Board or U.S. Environmental Protection Agency (EPA) upon request. Requests by the Regional Water Board for retention of records for a period longer than three years shall be adhered to.

1.6 REQUIRED NON-COMPLIANCE REPORTING

If a discharge violation occurs the QSP shall immediately notify the LRP and the LRP shall file a violation report electronically to the Regional Water Board 10 days of identification of non-compliance using SMARTS. Corrective measures will be implemented immediately following the discharge or written notice of non-compliance from the Regional Water Board. Discharges and corrective actions will be documented on the NAL/NEL Exceedance Site Evaluation Report Form in CSMP Attachment 3 "Example Forms."

The report to the LRP and to the Regional Water Board will contain the following items:

- The date, time, location, nature of operation and type of unauthorized discharge.
- The cause or nature of the notice or order.
- The control measures (BMPs) deployed before the discharge event, or prior to receiving notice or order.

The date of deployment and type of control measures (BMPs) deployed after the discharge event, or after receiving the notice or order, including additional measures installed or planned to reduce or prevent re-occurrence.

Reporting requirements for Numeric Action Levels (NALs) exceedances are discussed in Section 7.7.2.7.

1.7 ANNUAL REPORT

The General Permit requires that permittees prepare, certify, and electronically submit an Annual Report no later than September 1st of each year. Reporting requirements are identified in Section XVI of the General Permit. Annual reports will be filed in SMARTS and in accordance with information required by the on-line forms.

1.8 CHANGES TO PERMIT COVERAGE

The General Permit allows for the reduction or increase of the total acreage covered under the General Permit when: a portion of the project is complete and/or conditions for termination of coverage have been met; when ownership of a portion of the project is purchased by a different entity; or when new acreage is added to the project.

Modified PRDs shall be filed electronically within 30 days of a reduction or increase in total disturbed area if a change in permit covered acreage is to be sought. The SWPPP shall be modified appropriately, shall be logged at the front of the SWPPP and cetrification of SWPPP amendments are to be kept in Appendix D. Updated PRDs submitted electronically via SMARTS can be found in Appendix E.

1.9 NOTICE OF TERMINATION

A Notice of Termination (NOT) must be submitted electronically by the LRP via SMARTS to terminate coverage under the General Permit. The NOT must include a final Site Map and representative photographs of the project site that demonstrate final stabilization has been achieved. The NOT shall be submitted within 90 days of completion of construction. The Regional Water Board will consider a construction site complete when the conditions of the General Permit, Section II.D have been met.

Section 2 Project Information

2.1 PROJECT AND SITE DESCRIPTION

2.1.1 Site Description

The Broderson Leach Field project site comprises approximately 7.8 and is located at southerly end of Broderson Avenue, in Los Osos, California. The project site is located approximately 10 mile west of Hwy 101 off of Los Osos Valley Road in the community of Los Osos, Ca. The project site is located approximately 1 mile south of the Morro Bay Estuary. The project is located at Latitude 35-18'-28'' N, Longitude 120-50'-40''W and is identified on the Site Map in Appendix B.

2.1.2 Existing Conditions

As of the initial date of this SWPPP, the project site is undeveloped with non-native grasses and shrubs. The soils consist of fine, and course sands. There are no known historic sources of contamination at the site.

2.1.3 Existing Drainage

The project site is topography is slightly undulating as it slopes as a sheet to the north at approximately 9.5% towards Hyland Drive and is about 220 feet above mean sea level (msl). Stormwater is conveyed via sheet flow. Stormwater discharges, from the site, are not considered direct discharges, as defined by the State Water Board. Existing site topography, drainage patterns, and stormwater conveyance systems are shown on SWPPP drawings.

The project discharges to the Morro Bay Estuary that is listed for water quality impairment on the most recent 303(d)-list for:

- Sediment
- Oxygen

2.1.4 Geology and Groundwater

The site is underlain by course and fine dune sands and is at the top of both the upper and lower Los Osos aquifers. See the soils report prepared by FUGRO that is a part of the Construction Documents. Ground water in this location is deep. The groundwater gradient is toward the north to the Morro Bay Estuary.

2.1.5 Project Description

Project grading will occur on approximately 7.8 acres of the project site which consists of approximately 80 acres, which comprises approximately 10 percent of the total area. The limits of grading are shown on SWPPP Drawing in Appendix B. Grading will include excavation for the installation of leach lines and finish grading and recontouring and final planting with native plants. No export or import of material is anticipated at this location, graded materials are expected to be balanced onsite.

2.1.6 Developed Condition

Post construction surface drainage will be directed such as to not change the existing surface flows which is currently sheet flow towards the north.

Post construction drainage patterns and conveyance systems are presented on grading plan with in the Construction Documents and in the SWPPP Drawings in Appendix B.

Table 2.1 Construction Site Estimates

Construction site area	7.8	acres
Percent impervious before construction	100	%
Runoff coefficient before construction	.35	
Percent impervious after construction	0	%
Runoff coefficient after construction	.35	

2.2 PERMITS AND GOVERNING DOCUMENTS

In addition to the General Permit, the following documents have been taken into account while preparing this SWPPP

- Regional Water Board requirements
- Basin Plan requirements
- Contract Documents
- Air Quality Regulations and Permits

- Federal Endangered Species Act
- National Historic Preservation Act/Requirements of the State Historic Preservation Office
- State of California Endangered Species Act
- Clean Water Act Section 401 Water Quality Certifications and 404 Permits
- CA Department of Fish and Game 1600 Streambed Alteration Agreement

2.3 STORMWATER RUN-ON FROM OFFSITE AREAS

Run-on to the site is generated by the sheet flow from the acres of grasslands directly north of the site.

The stormwater runoff drainage area contributing to offsite run-on is estimated to be approximately 180 acres which sheet drains to the southerly boundary of the graded area along the contour and is 1350 feet long. The anticipated runoff coefficients from the grassland area is .35 or less due to the very sandy soils conditions, vegetation and the ability of the soils to absorb the sheet flow. The anticipated off-site run-on to the project site is estimated to be 104 CFS or approximately .07 CFS per linear foot along the southerly boundary of the disturbed area.

The General Permit requires that temporary BMPs be implemented to direct offsite run-on away from disturbed areas through the use of runoff controls. The following BMPs will be implemented earthen berm barriers and natural topographic elements. These BMPs will be located above the work area and convey run on to the east and west of the project bounds. The off-site drainage areas and associated stormwater conveyance facilities or BMPs are shown on SWPPP Drawings in Appendix B.

2.4 FINDINGS OF THE CONSTRUCTION SITE SEDIMENT AND RECEIVING WATER RISK DETERMINATION

A construction site risk assessment has been performed for the project and the resultant risk level is Risk Level 2.

The risk level was determined though the use of the Sediment Risk Factor Spreadsheet which is attached. The risk level is based on project duration, location, proximity to impaired receiving waters and soil conditions. A copy of the Risk Level determination submitted on SMARTS with the PRDs is included in Appendix C.

Table 2.2 and Table 2.3 summarize the sediment and receiving water risk factors and document the sources of information used to derive the factors.

Table 2.2 Summary of Sediment Risk

RUSLE Factor	Value	Method for establishing value
R	53.34	NDPES Rainfall Erosivity Factor Calculator
K	.01	Google Map and Fugro Soils Report Information
LS	2.66	Project Average Slope
Total Predicted Sediment Loss (tons/acre)		**14.18844**
Overall Sediment Risk Low Sediment Risk < 15 tons/ acre Medium Sediment Risk >= 15 and < 75 tons/acre High Sediment Risk >= 75 tons/acre		X **Low** ☐ **Medium** ☐ **High**

Runoff from **Error! Hyperlink reference not valid.**the project site discharges via sheet flow to Hyland Drive which drains via the surface streets drainage swales and alike that eventually discharge into the water body.

Table 2.3 Summary of Receiving Water Risk

Receiving Water Name	303(d) Listed for Sediment Related Pollutant(1)	TMDL for Sediment Related Pollutant(1)	Beneficial Uses of COLD, SPAWN, and MIGRATORY(1)
Morro Bay Estuary	X Yes ☐ No	X Yes ☐ No	X Yes ☐ No
Overall Receiving Water Risk			☐ **Low** X **High**
(1) If yes is selected for any option the Receiving Water Risk is High			

Risk Level 2 sites are subject to both the narrative effluent limitations and numeric effluent standards. The narrative effluent limitations require stormwater discharges associated with construction activity to minimize or prevent pollutants in stormwater and authorized non-stormwater through the use of controls, structures and best management practices. Discharges from Risk Level 2 site

are subject to NALs for pH and turbidity shown in Table 2-4. This SWPPP has been prepared to address Risk Level 2 requirements (General Permit Attachment D).

Table 2.4 Numeric Action Levels

Parameter	Unit	Numeric Action Level Daily Average
pH	pH units	Lower NAL = 6.5 Upper NAL = 8.5
Turbidity	NTU	250 NTU

2.5 CONSTRUCTION SCHEDULE

The site sediment risk was determined based on construction taking place between January 2013 and October 2013. Modification or extension of the schedule (start and end dates) may affect risk determination and permit requirements. The LRP shall contact the QSD if the schedule changes during construction to address potential impact to the SWPPP. The estimated schedule for planned work can be found in Appendix F.

2.6 POTENTIAL CONSTRUCTION ACTIVITY AND POLLUTANT SOURCES

Appendix G includes a list of construction activities and associated materials that are anticipated to be used onsite. These activities and associated materials will or could potentially contribute pollutants, other than sediment, to stormwater runoff.

The anticipated activities and associated pollutants were used in Section 3 to select the Best Management Practices for the project. Location of anticipated pollutants and associated BMPs are show on the Site Map in Appendix B.

For sampling requirements for non-visible pollutants associated with construction activity please refer to Section 7.7.1. For a full and complete list of onsite pollutants, refer to the Material Safety Data Sheets (MSDS), which are retained onsite at the construction trailer.

2.7 IDENTIFICATION OF NON-STORMWATER DISCHARGES

Non-stormwater discharges consist of discharges which do not originate from precipitation events. The General Permit provides allowances for specified non-stormwater discharges that do not cause erosion or carry other pollutants.

Non-stormwater discharges into storm drainage systems or waterways, which are not authorized under the General Permit and listed in the SWPPP, or authorized under a separate NPDES permit, are prohibited.

Non-stormwater discharges that are authorized from this project site include the following:

- de-chlorinated potable water sources such as: fire hydrant flushing
- irrigation of vegetative erosion control measures
- pipe flushing and testing
- water to control dust
- uncontaminated groundwater dewatering as long as it is either delivered to the Mid-Town Detention Basin or to Broderson Leach Field Site.

These authorized non-stormwater discharges will be managed with the stormwater and non-stormwater BMPs described in Section 3 of this SWPPP and will be minimized by the QSP.

Activities at this site that may result in unauthorized non-stormwater discharges include:

- Vehicle and equipment cleaning, fueling and maintenance operations;
- Vehicle and equipment wash water, including concrete washout water;
- Slurries from concrete cutting and coring operations, PCC grinding or AC grinding operations;
- Slurries from concrete or mortar mixing operations;
- Slurries from drilling or boring operations;
- Blast residue from high-pressure washing of structures or surfaces;
- Wash water from cleaning painting equipment;

- Runoff from dust control applications of water or dust palliatives;
- Sanitary and septic wastes;
- Chemical leaks and/or spills of any kind including but not limited to petroleum, paints, cure compounds, etc.

Steps will be taken, including the implementation of appropriate BMPs, to ensure that unauthorized discharges are eliminated, controlled, disposed, or treated on-site.

Discharges of construction materials and wastes, such as fuel or paint, resulting from dumping, spills, or direct contact with rainwater or stormwater runoff, are also prohibited.

2.8 REQUIRED SITE MAP INFORMATION

The construction project's Site Map(s) showing the project location, surface water boundaries, geographic features, construction site perimeter and general topography and other requirements identified in Attachment B of the General Permit is located in Appendix B.

3.1 SCHEDULE FOR BMP IMPLEMENTATION

The BMP schedule is the component of the project SWPPP that shows the timeline for when BMPs will be installed so that the project is in compliance with the General Permit. The schedule provides information necessary to plan for adequate materials and crews to install BMPs at the right time so that they are effective. Use Table 3.1 to identify BMP and their schedule for implementation.
The items identified below shall be deployed as noted and as per the information below. In order to be effective, some BMPs must be installed before the site is disturbed (e.g., to provide protection during grading operations or to reduce or minimize pollution from historic areas of contamination during construction).

This project is Risk Level 2 and encompasses the construction of the Broderson Leach Field and associated access road. The items marked "Prior to Construction" shall be installed at all locations as noted on the plans prior to any ground disturbing activities including but not limited to the installation of fencing. See SWPPP Drawings for installation locations.

Table 3.1 BMP Implementation Schedule

	BMP	Implementation	Duration
Erosion Control	EC-1, Scheduling	Prior to Construction	Entirety of Project
	EC-2, Preservation of Existing Vegetation	Start of Construction	Entirety of Project
	EC-7 Long Term Erosion Control Blankets	As Practicable	As shown on plans.
	EC- 3/6 Hydraulic Mulch / Straw Application	As Practicable	As shown on plans.
Sediment Control	SE-1 Silt Fencing	Prior to Construction	As shown on plans.
	SE-5 Fiber Rolls	Prior to Construction where part of Perimeter Controls	As shown on plans.

This project is Risk Level 2 and encompasses the construction of the Broderson Leach Field and associated access road. The items marked "Prior to Construction" shall be installed at all locations as noted on the plans prior to any ground disturbing activities including but not limited to the installation of fencing. See SWPPP Drawings for installation locations.

Table 3.1 BMP Implementation Schedule

	BMP	Implementation	Duration
	SE-7 Street Cleaning	During Construction	As necessary and or directed by the QSD or QSP
	SE-6 Gravel Bag Barriers	During Construction	As shown on plans.
Tracking Control	TC-1 Stabilized Construction Entrance	Prior to Construction	As shown on plans.
	TC-2 Stabilized Construction Roads	Prior to Construction	As shown on plans or found necessary.
Wind Erosion	WE-1 Wind Erosion Prevention	During Construction	As shown on plans and as stockpiles need.

3.2 EROSION AND SEDIMENT CONTROL

Erosion and sediment controls are required by the General Permit to provide effective reduction or elimination of sediment related pollutants in stormwater discharges and authorized non-stormwater discharges from the Site. Applicable BMPs are identified in this section for erosion control, sediment control, tracking control, and wind erosion control.

3.2.1 Erosion Control

Erosion control, also referred to as soil stabilization, consists of source control measures that are designed to prevent soil particles from detaching and becoming transported in stormwater runoff. Erosion control BMPs protect the soil surface by covering and/or binding soil particles.

This construction project will implement the following practices to provide effective temporary and final erosion control during construction:

1. Preserve existing vegetation where required and when feasible.
2. The area of soil disturbing operations shall be controlled such that the Contractor is able to implement erosion control BMPs quickly and effectively.
3. Stabilize non-active areas within 14 days of cessation of construction activities or sooner if stipulated by local requirements.
4. Control erosion in concentrated flow paths by applying erosion control blankets, check dams, erosion control seeding or alternate methods.
5. Prior to the completion of construction, apply permanent erosion control to remaining disturbed soil areas.

Sufficient erosion control materials shall be maintained onsite to allow implementation in conformance with this SWPPP.

The following temporary erosion control BMP selection table indicates the BMPs that shall be implemented to control erosion on the construction site. Fact Sheets for temporary erosion control BMPs are provided in Appendix H.

Table 3.2 Temporary Erosion Control BMPs

CASQA Fact Sheet	BMP Name	Meets a Minimum Requirement(1)	BMP Used		If not used, state reason
			YES	NO	
EC-1	Scheduling	✓	X		
EC-2	Preservation of Existing Vegetation	✓	X		
EC-3	Hydraulic Mulch	✓(2)	X		
EC-4	Hydroseed	✓(2)	X		POSSIBLE USE OF NATIVE HYDROSEED
EC-5	Soil Binders	✓(2)	X		
EC-6	Straw Mulch	✓(2)	X		
EC-7	Geotextiles and Mats	✓(2)	X		

Table 3.2 Temporary Erosion Control BMPs

CASQA Fact Sheet	BMP Name	Meets a Minimum Requirement[1]	BMP Used		If not used, state reason
			YES	NO	
EC-8	Wood Mulching	✓[2]	X		USE OF EUCALIPTUS TREE MULCH
EC-9	Earth Dike and Drainage Swales	✓[3]	X		
EC-10	Velocity Dissipation Devices		X		
EC-11	Slope Drains			X	NOT NECESSARY
EC-12	Stream Bank Stabilization			X	NO STREAM CROSSINGS
EC-14	Compost Blankets	✓[2]	X		
EC-15	Soil Preparation-Roughening		X		
EC-16	Non-Vegetated Stabilization	✓[2]	X		
WE-1	Wind Erosion Control	✓	X		
Alternate BMPs Used:					**If used, state reason:**

[1] Applicability to a specific project shall be determined by the QSD.
[2] The QSD shall ensure implementation of one of the minimum measures listed or a combination thereof to achieve and maintain the Risk Level requirements.
[3] Run-on from offsite shall be directed away from all disturbed areas, diversion of offsite flows may require design/analysis by a licensed civil engineer and/or additional environmental permitting

These temporary erosion control BMPs shall be implemented in conformance with the following guidelines and as outlined in the BMP Factsheets provided in Appendix H. If there is a conflict between documents, the Site Map will prevail over narrative in the body of the SWPPP or guidance in the BMP Fact Sheets. Site specific details in the Site Map prevail over standard details included in the Site Map. The narrative in the body of the SWPPP prevails over guidance in the BMP Fact Sheets.

Scheduling

The Contractor shall provide an implementation Schedule within 30 days of Notice to Proceed and Amend the SWPPP and upload the Amendment to the SMARTS.

Preservation of Existing Vegetation

Contractor shall preserve all vegetation possible in the course of the work.

Hydraulic Mulch

Hydraulic Mulch and/or Hydroseed shall be utilized on the Project as shown on the plans.

Hydroseed

Hydraulic Mulch and/or Hydroseed shall be utilized on the Project as shown on the plans.

Soil Binders

Bonded Fiber Matrix will be used as shown on the plans as practicable.

Straw Mulch

Straw Mulch will be used as shown on the plans as practicable.

Geotextiles and Mats

Coco Mats will be utilized on the Project as shown on the plans.

Wood Mulching

Wood Mulching may be utilized by using the eucalyptus trees that will be removed from the site.

Earth Dike and Drainage Swales

Earthen Dikes and Drainage Swales shall be utilized as shown on the plans.

Velocity Dissipation Devices

Gravel Bag Barriers and Chevrons will be utilized to intercept flows in paved and unpaved areas flowing to existing drop inlets and other drainage devices. These devices shall be installed in conformance with plans and as directed by the QSD or QSP.

Compost Blankets

Coco Mats and other types of blankets may be utilized on the Project as applicable and shown on the plans.

Soil Preparation-Roughening

All fill and cut slopes will be roughened or track walked in a vertical manner prior to final finishing of slopes and prior to placement of other erosion control measure i.e. hydromulch, hydroseed etc.

Non-Vegetated Stabilization

May be implemented as shown on plans as practicable.

Wind Erosion Control

Dust Control and Wind Erosion Measures shall be implemented at all times.

3.2.2 Sediment Controls

Sediment controls are temporary or permanent structural measures that are intended to complement the selected erosion control measures and reduce sediment discharges from active construction areas. Sediment controls are designed to intercept and settle out soil particles that have been detached and transported by the force of water.

The following sediment control BMP selection table indicates the BMPs that shall be implemented to control sediment on the construction site. Fact Sheets for temporary sediment control BMPs are provided in Appendix H.

Sufficient quantities of temporary sediment control materials shall be maintained on-site throughout the duration of the project. Allowing for implementation of temporary sediment controls in the event of predicted rain and for rapid response do to failures or emergencies, in conformance with other General Permit requirements and as described in this SWPPP

Table 3.3 Temporary Sediment Control BMPs

CASQA Fact Sheet	BMP Name	Meets a Minimum Requirement(1)	BMP used		If not used, state reason
			YES	NO	
SE-1	Silt Fence	✓(2) (3)	X		
SE-2	Sediment Basin		X		
SE-3	Sediment Trap		X		
SE-4	Check Dams		X		
SE-5	Fiber Rolls	✓(2)(3)	X		
SE-6	Gravel Bag Berm	✓(3)	X		
SE-7	Street Sweeping	✓	X		
SE-8	Sandbag Barrier		X		
SE-9	Straw Bale Barrier			X	INAPPROPRIATE BMP
SE-10	Storm Drain Inlet Protection	✓ RL2&3	X		
SE-11	ATS			X	NOT REQUIRED AT THIS TIME

Table 3.3 Temporary Sediment Control BMPs

CASQA Fact Sheet	BMP Name	Meets a Minimum Requirement[1]	BMP used		If not used, state reason
			YES	NO	
SE-12	Temporary Silt Dike		X		
SE-13	Compost Sock and Berm	✓[3]		X	NOT REQUIRED AT THIS TIME
SE-14	Biofilter Bags	✓[3]	X		
TC-1	Stabilized Construction Entrance and Exit	✓	X		
TC-2	Stabilized Construction Roadway		X		
TC-3	Entrance Outlet Tire Wash			X	USE OF ROCK OR RATTLERS
Alternate BMPs Used:					**If used, state reason:**

[1] Applicability to a specific project shall be determined by the QSD
[2] The QSD shall ensure implementation of one of the minimum measures listed or a combination thereof to achieve and maintain the Risk Level requirements
[3] Risk Level 2 &3 shall provide linear sediment control along toe of slope, face of slope, and at the grade breaks of exposed slope

These temporary sediment control BMPs shall be implemented in conformance with the following guidelines and in accordance with the BMP Fact Sheets provided in Appendix H. If there is a conflict between documents, the Site Map will prevail over narrative in the body of the SWPPP or guidance in the BMP Fact Sheets. Site specific details in the Site Map prevail over standard details included in the Site Map. The narrative in the body of the SWPPP prevails over guidance in the BMP Fact Sheets.

Silt Fence

Silt Fences shall be installed at the lower perimeter of project areas and around large stockpiles as Primary Protection.

Sediment Basin

The use of a Sediment Basin at the Broderson site is not practical with the slope of the site and the sandy material.

Sediment Trap

Gravel Bag Berms and Chevrons will be utilized as Sediment Traps in and around the Project.

Check Dams

Earthen Check Dams may be utilized as Sediment Traps above the project and may also be used to divert Run-on stormwater.

Fiber Rolls

Fiber Rolls will be used as Sediment Traps along unpaved areas and around stockpiles. They will also be used on all cut and fill slopes as required by regulations and shown on plans.

Gravel Bag Berm

Gravel Bag Berms and Chevrons will be utilized as Sediment Traps in and around the Project.

Street Sweeping

Street Sweeping will be performed daily at all staging and storage areas and as needed throughout the project to control tracking of materials from work areas and to recapture materials that have already been deposited.

Sandbag Barrier

Sandbag Barriers will only be used to direct flows and not as a Desiltation BMP.

Storm Drain Inlet Protection

DI Protection shall be installed at all existing Storm Drain Inlets in a timely manner. These protections will consist of a variety of measures included in Appendix H.

ATS

Not required at this time. In the event that the Contractors QSP deems an ATS necessary or if the QSD deems it necessary for a particular circumstance of the Project an ATS System will be designed and implemented in accordance with the Order.

Temporary Silt Dike

Not Used.

Compost Sock and Berm

Not Used.

Biofilter Bags

Not specified at this time. May be used in DI's as deemed necessary by the QSD or QSP.

Stabilized Construction Entrance and Exit

Contractor shall utilize either rock entrances or rattlers in accordance with TC-1.

Stabilized Construction Roadway

May be necessary at the base road for adequate access to the Broderson Leach Field site.

Entrance Outlet Tire Wash

Not Used.

3.3 NON-STORMWATER CONTROLS AND WASTE AND MATERIALS MANAGEMENT

3.3.1 Non-Stormwater Controls

Non-stormwater discharges into storm drainage systems or waterways, which are not authorized under the General Permit, are prohibited. Non-stormwater discharges for which a separate NPDES permit is required by the local Regional Water Board are prohibited unless coverage under the separate NPDES permit has been obtained for the discharge. The selection of non-stormwater BMPs is based on the list of construction activities with a potential for non-stormwater discharges identified in Section 2.7 of this SWPPP.

The following non-stormwater control BMP selection table indicates the BMPs that shall be implemented to control sediment on the construction site. Fact Sheets for temporary non-stormwater control BMPs are provided in Appendix H.

Table 3.4 Temporary Non-Stormwater BMPs

CASQA Fact Sheet	BMP Name	Meets a Minimum Requirement[1]	BMP used		If not used, state reason
			YES	NO	
NS-1	Water Conservation Practices	✓	X		
NS-2	Dewatering Operation		X		
NS-3	Paving and Grinding Operation		X		
NS-4	Temporary Stream Crossing			X	NO CROSSINGS
NS-5	Clear Water Diversion			X	NO DIVERSIONS
NS-6	Illicit Connection- Illegal Discharge Connection	✓	X		
NS-7	Potable Water Irrigation Discharge Detection		X		
NS-8	Vehicle and Equipment Cleaning	✓	X		
NS-9	Vehicle and Equipment Fueling	✓	X		
NS-10	Vehicle and Equipment Maintenance	✓	X		
NS-11	Pile Driving Operation			X	NO PILE DRIVING
NS-12	Concrete Curing		X		
NS-13	Concrete Finishing		X		
NS-14	Material and Equipment Use Over Water			X	NOT APPLICABLE
NS-15	Demolition Removal Adjacent to Water			X	NOT APPLICABLE
NS-16	Temporary Batch Plants			X	NOT APPLICABLE
Alternate BMPs Used:			**If used, state reason:**		

[1] Applicability to a specific project shall be determined by the QSD

Non-stormwater BMPs shall be implemented in conformance with the following guidelines and in accordance with the BMP Fact Sheets provided in Appendix H. If there is a conflict between documents, the Site Map will prevail over narrative in the body of the SWPPP or guidance in the BMP Fact Sheets. Site specific details in the Site Map prevail over standard details included in the Site Map. The narrative in the body of the SWPPP prevails over guidance in the BMP Fact Sheets.

Water Conservation Practices

Water Conservation will be practiced on the site.

Dewatering Operation

Dewatering will be performed in conformance with the contractors approved Dewatering Plan and with the applicable BMP's and requirements of the letter provided by the Central Coast RWQCB "Use and Disposal Plan for Construction Dewatering, Los Osos Project" dated May 27, 2011

Paving and Grinding Operation

Paving and Grinding Operations shall be performed in conformance with CGP regulations and BMP's.

Temporary Stream Crossing

No Temporary Stream Crossing and anticipated with this project.

Clear Water Diversion

No Clear Water Diversions are anticipated with this project.

Illicit Connection- Illegal Discharge Connection

The Contractor shall report in conformance with the CGP any and all Illicit or Illegal Discharges.

Potable Water Irrigation Discharge Detection

Potable Water will be utilized for irrigation of landscape elements at the pump stations, generator facilities and Broderson Leach Field. These areas should be monitored for over use and leaks. Release of irrigation discharge shall be in conformance with the CGP

Vehicle and Equipment Cleaning

Appropriate BMP's shall be in place in the Contractors construction yard for cleaning of vehicles and/or equipment.

Vehicle and Equipment Fueling

Appropriate BMP's shall be in place in the Contractors construction yard as well as the remote fueling trucks will need to be equipped with diapers, drip pans, etc. to perform field fueling.

Vehicle and Equipment Maintenance

Vehicle and Equipment Maintenance will be limited to minor maintenance items i.e. oil changes, filter changes and items considered minor in nature. Any major maintenance will be performed off site.

Concrete Curing

Concrete Curing BMP's shall be implemented at all sites that concrete placement and finishing takes place. In areas that drainage has a direct course to a culvert, drop inlet or alike leading to

Morro Bay or other water body special care will be taken in the implementation of BMP's and monitoring of activities.

Concrete Finishing

Concrete Finishing BMP's shall be implemented at all sites that concrete placement and finishing takes place. In areas that drainage has a direct course to a culvert, drop inlet or alike leading to Morro Bay or other water body special care will be taken in the implementation of BMP's and monitoring of activities.

Temporary Batch Plants

Temporary Batch Plants may be utilized by the Contractor in the event he elects to utilize slurry backfill for trenches. The Contractor will abide by the BMP's for Batch Plants and shall take special care that the plant is not located on a site that would allow runoff from the plant to be conveyed to any water of the US.

3.3.2 Materials Management and Waste Management

Materials management control practices consist of implementing procedural and structural BMPs for handling, storing and using construction materials to prevent the release of those materials into stormwater discharges. The amount and type of construction materials to be utilized at the Site will depend upon the type of construction and the length of the construction period. The materials may be used continuously, such as fuel for vehicles and equipment, or the materials may be used for a discrete period, such as soil binders for temporary stabilization.

Waste management consist of implementing procedural and structural BMPs for handling, storing and ensuring proper disposal of wastes to prevent the release of those wastes into stormwater discharges.

Materials and waste management pollution control BMPs shall be implemented to minimize stormwater contact with construction materials, wastes and service areas; and to prevent materials and wastes from being discharged off-site. The primary mechanisms for stormwater contact that shall be addressed include:

- Direct contact with precipitation
- Contact with stormwater run-on and runoff
- Wind dispersion of loose materials
- Direct discharge to the storm drain system through spills or dumping
- Extended contact with some materials and wastes, such as asphalt cold mix and treated wood products, which can leach pollutants into stormwater.

A list of construction activities is provided in Section 2.6. The following Materials and Waste Management BMP selection table indicates the BMPs that shall be implemented to handle materials and control construction site wastes associated with these construction activities. Fact Sheets for Materials and Waste Management BMPs are provided in Appendix H.

Table 3.5 Temporary Materials Management BMPs

CASQA Fact Sheet	BMP Name	Meets a Minimum Requirement[1]	BMP used		If not used, state reason
			YES	NO	
WM-01	Material Delivery and Storage	✓	X		
WM-02	Material Use	✓	X		
WM-03	Stockpile Management	✓	X		
WM-04	Spill Prevention and Control	✓	X		
WM-05	Solid Waste Management	✓	X		
WM-06	Hazardous Waste Management	✓		X	NO HAZARDOUS WASTE IS ANTICIPATED
WM-07	Contaminated Soil Management			X	NO CONTAMINATED SOIL IS ANTICIPATED
WM-08	Concrete Waste Management	✓	X		
WM-09	Sanitary-Septic Waste Management	✓	X		
WM-10	Liquid Waste Management		X		
Alternate BMPs Used:				**If used, state reason:**	

[1] Applicability to a specific project shall be determined by the QSD.

Material management BMPs shall be implemented in conformance with the following guidelines and in accordance with the BMP Fact Sheets provided in Appendix H. If there is a conflict between documents, the Site Map will prevail over narrative in the body of the SWPPP or guidance in the BMP Fact Sheets. Site specific details in the Site Map prevail over standard details included in the Site Map. The narrative in the body of the SWPPP prevails over guidance in the BMP Fact Sheets.

Material Delivery and Storage

Materials delivered and stored on site shall be kept in their original containers to the greatest extent possible. If the materials are removed from their original container the container shall be properly marked. All MSDS information shall be kept on site in conformance with the Contractors Health and Safety Plan. Materials shall be stored out of precipitation by either being covered or stored in a container. Materials covered shall not be in contact with the ground if possible.

Material Use

Material shall be used for their intended purpose.

Stockpile Management

Stockpiles of soil, AC Grindings, base and other materials shall be kept moist to prevent wind erosion and covered prior to rain events. Stockpiles shall be covered with plastic of geotextile prior to rain events to prevent erosion. Sediment control devices such as fiber rolls, gravel berms etc. shall be placed downstream of stockpiles to prevent the transport of sediment.

Spill Prevention and Control

Spill Prevention and Control BMP's are a part of this SWPPP and shall be implemented.

Solid Waste Management

Solid Waste Management BMP's are a part of this SWPPP. BMP's shall be implemented on this project. Solid Waste shall be deposited in trash bins or containers and shall be covered at the end of each business day and prior to rain events. The bins shall be water tight and covers shall be water proof to prevent rain intrusion into containers.

Hazardous Waste Management

Hazardous Materials are not anticipated on the project site. In the event hazardous materials are encountered the SWPPP will need to be updated by the QSD or QSP accordingly.

Contaminated Soil Management

Contaminated Soils are not anticipated on the project site. In the event they are encountered the SWPPP will need to be updated by the QSD or QSP accordingly.

Concrete Waste Management

Concrete Waste Management BMP's are a part of this SWPPP and shall be implemented at each site that concrete is provided. These BMP's include providing wash out facilities on site adequate to contain waste materials and maintain appropriate freeboard for wash out water. As an alternate concrete trucks may be made to provide their own on truck washout system.

Sanitary-Septic Waste Management

Sanitary-Septic Waste Management BMP's are a part of this SWPPP and shall be implemented. This shall include at a minimum portable toilet containment units at each location that portable toilets are provided. In addition portable toilets shall not be located within 100 feet of any drainage facility or drop inlet with in the project boundary.

Liquid Waste Management

Liquid Waste Management BMP's are a part of this SWPPP and shall be implemented.

3.4 POST CONSTRUCTION STORMWATER MANAGEMENT MEASURES

Post construction BMPs are permanent measures installed during construction, designed to reduce or eliminate pollutant discharges from the site after construction is completed.

This site is located in an area subject to a Phase I or Phase II Municipal Separate Storm Sewer System (MS4) permit approved Stormwater Management Plan. X Yes ☐ No

Los Osos CSD MS$ Phase II

The construction of the Broderson Leach Field is an underground project. The entire site will be reclaimed as a native plant habitat by the County of San Luis Obispo; therefore the construction is exempt from Post Construction BMP's

Section 4 BMP Inspection, Maintenance, and Rain Event Action Plans

4.1 BMP INSPECTION AND MAINTENANCE

The General Permit requires routine weekly inspections of BMPs, along with inspections before, during, and after qualifying rain events. A BMP inspection checklist must be filled out for inspections and maintained on-site with the SWPPP. The inspection checklist includes the necessary information covered in Section 7.6. A blank inspection checklist can be found in Appendix I. Completed checklists shall be kept in CSMP Attachment 2 "Monitoring Records.

BMPs shall be maintained regularly to ensure proper and effective functionality. If necessary, corrective actions shall be implemented within 72 hours of identified deficiencies and associated amendments to the SWPPP shall be prepared by the QSD.

Specific details for maintenance, inspection, and repair of Construction Site BMPs can be found in the BMP Factsheets in Appendix H.

4.2 RAIN EVENT ACTION PLANS

The Rain Event Action Plans (REAP) is written document designed to be used as a planning tool by the QSP to protect exposed portions of project sites and to ensure that the discharger has adequate materials, staff, and time to implement erosion and sediment control measures. These measures are intended to reduce the amount of sediment and other pollutants that could be generated during the rain event. It is the responsibility of the QSP to be aware of precipitation forecast and to obtain and print copies of forecasted precipitation from NOAA's National Weather Service Forecast Office.

The SWPPP includes REAP templates but the QSP will need to customize them for each rain event. Site-specific REAP templates for each applicable project phase can be found in Appendix J. The QSP shall maintain a paper copy of completed REAPs in compliance with the record retention requirements Section 1.5 of this SWPPP. Completed REAPs shall be maintained in Appendix J.

The QSP will develop an event specific REAP 48 hours in advance of a precipitation event forecast to have a 50% or greater chance of producing precipitation in the project area. The REAP will be onsite and be implemented 24 hours in advance of any the predicted precipitation event.

At minimum the REAP will include the following site and phase-specific information:

1. Site Address;
2. Calculated Risk Level (2);
3. Site Stormwater Manager Information including the name, company and 24-hour emergency telephone number;

4. Erosion and Sediment Control Provider information including the name, company and 24-hour emergency telephone number;
5. Stormwater Sampling Agent information including the name, company, and 24-hour emergency telephone number;
6. Activities associated with each construction phase;
7. Trades active on the construction site during each construction phase;
8. Trade contractor information; and
9. Recommended actions for each project phase.

Section 5 Training

The following text should be modified accordingly

Appendix L identifies the QSPs for the project. To promote stormwater management awareness specific for this project, periodic training of job-site personnel shall be included as part of routine project meetings (e.g. daily/weekly tailgate safety meetings), or task specific trainings as needed.

The QSP shall be responsible for providing this information at the meetings, and subsequently completing the training logs shown in Appendix K, which identifies the site-specific stormwater topics covered as well as the names of site personnel who attended the meeting. Tasks may be delegated to trained employees by the QSP provided adequate supervision and oversight is provided. Training shall correspond to the specific task delegated including: SWPPP implementation; BMP inspection and maintenance; and record keeping.

Documentation of training activities (formal and informal) is retained in SWPPP Appendix K.

Section 6 Responsible Parties and Operators

6.1 RESPONSIBLE PARTIES

Approved Signatory who is responsible for SWPPP implementation and has authority to sign permit-related documents is listed below. Written authorizations from the LRP for these individuals are provided in Appendix L. The Approved Signatory assigned to this project is:

Name	Title	Phone Number
David Flynn	Deputy Director Public Work	805-782-5252

QSPs identified for the project are identified in Appendix L. The QSP shall have primary responsibility and significant authority for the implementation, maintenance and inspection/monitoring of SWPPP requirements. The QSP will be available at all times throughout the duration of the project. Duties of the QSP include but are not limited to:

- Implementing all elements of the General Permit and SWPPP, including but not limited to:
  - Ensuring all BMPs are implemented, inspected, and properly maintained;
  - Performing non-stormwater and stormwater visual observations and inspections;
  - Performing non-stormwater and storm sampling and analysis, as required;
  - Performing routine inspections and observations;
  - Implementing non-stormwater management, and materials and waste management activities such as: monitoring discharges; general Site clean-up; vehicle and equipment cleaning, fueling and maintenance; spill control; ensuring that no materials other than stormwater are discharged in quantities which will have an adverse effect on receiving waters or storm drain systems; etc.;
- The QSP may delegate these inspections and activities to an appropriately trained employee, but shall ensure adequacy and adequate deployment.

- Ensuring elimination of unauthorized discharges.
- The QSPs shall be assigned authority by the LRP to mobilize crews in order to make immediate repairs to the control measures.
- Coordinate with the Contractor(s) to assure all of the necessary corrections/repairs are made immediately and that the project complies with the SWPPP, the General Permit and approved plans at all times.
- Notifying the LRP or Authorized Signatory immediately of off-site discharges or other non-compliance events.

6.2 CONTRACTOR LIST

Broderson Leach Field Construction

Contractor

Name:

Title:

Company:

Address:

Phone Number:

Number (24/7):

Section 7 Construction Site Monitoring Program

7.1 Purpose

This Construction Site Monitoring Program was developed to address the following objectives:

1. To demonstrate that the site is in compliance with the Discharge Prohibitions and Numeric Action Levels (NALs) of the Construction General Permit;
2. To determine whether non-visible pollutants are present at the construction site and are causing or contributing to exceedances of water quality objectives;
3. To determine whether immediate corrective actions, additional Best Management Practices (BMP) implementation, or SWPPP revisions are necessary to reduce pollutants in stormwater discharges and authorized non-stormwater discharges;
4. To determine whether BMPs included in the SWPPP and REAP are effective in preventing or reducing pollutants in stormwater discharges and authorized non-stormwater discharges.

7.2 Applicability of Permit Requirements

This project has been determined to be a Risk Level 2 project. The General Permit identifies the following types of monitoring as being applicable for a Risk Level 2 project.

Risk Level 2

- Visual inspections of Best Management Practices (BMPs);
- Visual monitoring of the site related to qualifying storm events;
- Visual monitoring of the site for non-stormwater discharges;
- Sampling and analysis of construction site runoff for pH and turbidity;
- Sampling and analysis of construction site runoff for non-visible pollutants when applicable; and
- Sampling and analysis of non-stormwater discharges when applicable.

7.3. Weather and Rain Event Tracking

Visual monitoring, inspections, and sampling requirements of the General Permit are triggered by a qualifying rain event. The General Permit defines a qualifying rain event as any event that produces ½ inch of precipitation. A minimum of 48 hours of dry weather will be used to distinguish between separate qualifying storm events.

7.3.1 Weather Tracking

The QSP should daily consult the National Oceanographic and Atmospheric Administration (NOAA) for the weather forecasts. These forecasts can be obtained at http://www.srh.noaa.gov/. Weather reports should be printed and maintained with the SWPPP in CSMP Attachment 1 "Weather Reports".

7.3.2 Rain Gauges

The QSP shall install 1 onsite rain gauge in a location that will not be disturbed for any reason and can be relied upon on the project site. Locate the gauge in an open area away from obstructions such as trees or overhangs. Mount the gauge on a post at a height of 3 to 5 feet with the gauge extending several inches beyond the post. Make sure that the top of the gauge is level. Make sure the post is not in an area where rainwater can indirectly splash from sheds, equipment, trailers, etc.

The rain gauge(s) shall be read daily during normal site scheduled hours. The rain gauge should be read at approximately the same time every day and the date and time of each reading recorded. Log rain gauge readings in CSMP Attachment 1 "Weather Records". Follow the rain gauge instructions to obtain accurate measurements.

Once the rain gauge reading has been recorded, accumulated rain shall be emptied and the gauge reset.

For comparison with the site rain gauge, the nearest appropriate governmental rain gauge(s) is located at the Los Osos Landfill. The web address is: http://www.slocountywater.org/weather/alert/precipitation/lolandfill.htm.

7.4 Monitoring Locations

Monitoring locations are shown on the SWPPP Drawings in Appendix B. Monitoring locations are described in the Sections 7.6 and 7.7.

Whenever changes in the construction site might affect the appropriateness of sampling locations, the sampling locations shall be revised accordingly. All such revisions shall be implemented as soon as feasible and the SWPPP amended. Temporary changes that result in a one-time additional sampling location do not require a SWPPP amendment.

7.5 Safety and Monitoring Exemptions

Safety practices for sample collection will be in accordance with the Contractors Health and Safety Plan CHSP. A summary of the safety requirements that apply to sampling personnel is provided below.

- None at this time.
-
-
-

This project is not required to collect samples or conduct visual observations (inspections) under the following conditions:

- During dangerous weather conditions such as flooding and electrical storms.
- Outside of scheduled site business hours.

Scheduled site business hours are: Shall be in accordance with the Construction Documents.

If monitoring (visual monitoring or sample collection) of the site is unsafe because of the dangerous conditions noted above then the QSP shall document the conditions for why an exception to performing the monitoring was necessary. The exemption documentation shall be filed in CSMP Attachment 2 “Monitoring Records”.

7.6 Visual Monitoring

Visual monitoring includes observations and inspections. Inspections of BMPs are required to identify and record BMPs that need maintenance to operate effectively, that have failed, or that could fail to operate as intended. Visual observations of the site are required to observe storm water drainage areas to identify any spills, leaks, or uncontrolled pollutant sources.

Table 7.1 identifies the required frequency of visual observations and inspections. Inspections and observations will be conducted at the locations identified in Section 7.6.3.

Table 7.1 Summary of Visual Monitoring and Inspections

Type of Inspection	Frequency
Routine Inspections	
BMP Inspections	Weekly[1]

Table 7.1 Summary of Visual Monitoring and Inspections

Type of Inspection	Frequency
BMP Inspections – Tracking Control	Daily
Non-Stormwater Discharge Observations	Quarterly during daylight hours
Rain Event Triggered Inspections	
Site Inspections Prior to a Qualifying Event	Within 48 hours of a qualifying event [2]
BMP Inspections During an Extended Storm Event	Every 24-hour period of a rainevent[2]
Site Inspections Following a Qualifying Event	Within 48 hours of a qualifying event[2]

[1] Most BMPs must be inspected weekly; those identified below must be inspected more frequently.

[2] Inspections are only required during scheduled site operating hours. Note however, these inspections are required daily regardless of the amount of precipitation.

7.6.1 Routine Observations and Inspections

Routine site inspections and visual monitoring are necessary to ensure that the project is in compliance with the requirements of the Construction General Permit.

7.6.1.1 Routine BMP Inspections

Inspections of BMPs are conducted to identify and record:

- BMPs that are properly installed;
- BMPs that need maintenance to operate effectively;
- BMPs that have failed; or
- BMPs that could fail to operate as intended.

7.6.1.2 Non-Stormwater Discharge Observations

Each drainage area will be inspected for the presence of or indications of prior unauthorized and authorized non-stormwater discharges. Inspections will record:

- Presence or evidence of any non-stormwater discharge (authorized or unauthorized);
- Pollutant characteristics (floating and suspended material, sheen, discoloration, turbidity, odor, etc.); and
- Source of discharge.

7.6.2 Rain-Event Triggered Observations and Inspections

Visual observations of the site and inspections of BMPs are required prior to a qualifying rain event; following a qualifying rain event, and every 24-hour period during a qualifying rain event. Pre-rain inspections will be conducted after consulting NOAA and determining that a precipitation event with a 50% or greater probability of precipitation has been predicted.

7.6.2.1 Visual Observations Prior to a Forecasted Qualifying Rain Event

Within 48-hours prior to a qualifying event a stormwater visual monitoring site inspection will include observations of the following locations:

- Stormwater drainage areas to identify any spills, leaks, or uncontrolled pollutant sources;
- BMPs to identify if they have been properly implemented;
- Any stormwater storage and containment areas to detect leaks and ensure maintenance of adequate freeboard.

Consistent with guidance from the State Water Resources Control Board, pre-rain BMP inspections and visual monitoring will be triggered by a NOAA forecast that indicates a probability of precipitation of 50% or more in the project area.

or

BMP inspections and visual monitoring will be triggered by a NOAA quantitative predicted forecast (QPF) that indicates ½-inch or more of rain will occur in the project area.

7.6.2.2 BMP Inspections During an Extended Storm Event

During an extended rain event BMP inspections will be conducted to identify and record:

- BMPs that are properly installed;
- BMPs that need maintenance to operate effectively;
- BMPs that have failed; or
- BMPs that could fail to operate as intended.

If the construction site is not accessible during the rain event, the visual inspections shall be performed at all relevant outfalls, discharge points, downstream locations. The inspections should record any projected maintenance activities.

7.6.2.2 Visual Observations Following a Qualifying Rain Event

Within 48 hours following a qualifying rain event (0.5 inches of rain) a stormwater visual monitoring site inspection is required to observe:

- Stormwater drainage areas to identify any spills, leaks, or uncontrolled pollutant sources;
- BMPs to identify if they have been properly designed, implemented, and effective;
- Need for additional BMPs;
- Any stormwater storage and containment areas to detect leaks and ensure maintenance of adequate freeboard; and
- Discharge of stored or contained rain water.

7.6.3 Visual Monitoring Procedures

Visual monitoring shall be conducted by the QSP or staff trained by and under the supervision of the QSP.

The name(s) and contact number(s) of the site visual monitoring personnel are listed below and their training qualifications are provided in Appendix K.

Assigned inspector: _____ Contact phone:_____

Alternate inspector: _____ Contact phone: _____

Stormwater observations shall be documented on the *Visual Inspection Field Log Sheet* (see CSMP Attachment 3 "Example Forms"). BMP inspections shall be documented on the site specific BMP inspection checklist. Any photographs used to document observations will be referenced on stormwater site inspection report and maintained with the Monitoring Records in Attachment 2.

The QSP shall within 5 days of the inspection submit copies of the completed inspection report to QSD and or LRP.

The completed reports will be kept in CSMP Attachment 2 "Monitoring Records".

7.6.4 Visual Monitoring Follow-Up and Reporting

Correction of deficiencies identified by the observations or inspections, including required repairs or maintenance of BMPs, shall be initiated and completed as soon as possible.

If identified deficiencies require design changes, including additional BMPs, the implementation of changes will be initiated within 72 hours of identification and be completed as soon as possible. When design changes to BMPs are required, the SWPPP shall be amended to reflect the changes.

Deficiencies identified in site inspection reports and correction of deficiencies will be tracked on the *Inspection Field Log Sheet* or *BMP Inspection Report* and shall be submitted to the QSP and shall be kept in CSMP Attachment 2 "Monitoring Records".

The QSP shall within 5 days of the inspection submit copies of the completed *Inspection Field Log Sheet* or *BMP Inspection Report* with the corrective actions to QSD and/or LRP.

Results of visual monitoring must be summarized and reported in the Annual Report.

7.6.5 Visual Monitoring Locations

The inspections and observations identified in Sections 7.6.1 and 7.6.2 will be conducted at the locations identified in this section.

BMP locations are shown on the SWPPP Drawings in SWPPP Appendix A.

There tow (2) drainage area on the project site the first is the construction areas of the leach field and the other is at the base of the access road. Drainage area(s) are shown on the SWPPP Drawings in Appendix B and Table 7.2 identifies each drainage area by location.

Table 7.2 Site Drainage Areas

Location No.	Location
1	Leach Field Area
2	Base of Access Road

There is no stormwater storage or containment area(s) are on the project site. Stormwater storage or containment area(s) are shown on the SWPPP Drawings in Appendix B and Table 7.3 identifies each stormwater storage or containment area by location.

Table 7.3 Stormwater Storage and Containment Areas

Location No.	Location
None	

The site discharge is intended to be sheet flow however a low point that could end up being a point of concentrated run-off is identified for the project site. A second discharge point at the where the access road and Broderson Ave. paving meets is identified. Site stormwater discharge location(s) are shown on the SWPPP Drawings in Appendix B and Table 7.4 identifies each stormwater discharge location.

Table 7.4 Site Stormwater Discharge Locations

Location No.	Location
1	Leach Field Sheet Flow possible low point
2	Base of Access Road @ Broderson Pavement

7.7 Water Quality Sampling and Analysis

7.7.1 Sampling and Analysis Plan for Non-Visible Pollutants in Stormwater Runoff Discharges

This Sampling and Analysis Plan for Non-Visible Pollutants describes the sampling and analysis strategy and schedule for monitoring non-visible pollutants in stormwater runoff discharges from the project site.

Sampling for non-visible pollutants will be conducted when (1) a breach, leakage, malfunction, or spill is observed; and (2) the leak or spill has not been cleaned up prior to the rain event; and (3) there is the potential for discharge of non-visible pollutants to surface waters or drainage system.

The following construction materials, wastes, or activities, as identified in Section 2.6, are potential sources of non-visible pollutants to stormwater discharges from the project. Storage, use, and operational locations are shown on the SWPPP Drawings in Appendix B.

- Solvents
- Battery Acid
- Fertilizers

The following existing site features, as identified in Section 2.6, are potential sources of non-visible pollutants to stormwater discharges from the project. Locations of existing site features contaminated with non-visible pollutants are shown on the SWPPP Drawings in Appendix B.

- None

The following soil amendments have the potential to change the chemical properties, engineering properties, or erosion resistance of the soil and will be used on the project site. Locations of soil amendment application are shown on the SWPPP Drawings in Appendix B.

- None

The project has the potential to receive stormwater run-on from the following locations with the potential to contribute non-visible pollutants to stormwater discharges from the project. Locations of such run-on to the project site are shown on the SWPPP Drawings in Appendix B.

- None

7.7.1.1 Sampling Schedule

Samples for the potential non-visible pollutant(s) and a sufficiently large unaffected background sample shall be collected during the first two hours of discharge from rain events that result in a sufficient discharge for sample collection. Samples shall be collected during the site's scheduled hours and shall be collected regardless of the time of year and phase of the construction.

Collection of discharge samples for non-visible pollutant monitoring will be triggered when any of the following conditions are observed during site inspections conducted prior to or during a rain event.

- Materials or wastes containing potential non-visible pollutants are not stored under watertight conditions. Watertight conditions are defined as (1) storage in a watertight container, (2) storage under a watertight roof or within a building, or (3) protected by temporary cover and containment that prevents stormwater contact and runoff from the storage area.

- Materials or wastes containing potential non-visible pollutants are stored under watertight conditions, but (1) a breach, malfunction, leakage, or spill is observed, (2) the leak or spill is not cleaned up prior to the rain event, and (3) there is the potential for discharge of non-visible pollutants to surface waters or a storm drain system.
- A construction activity, including but not limited to those in Section 2.6, with the potential to contribute non-visible pollutants (1) was occurring during or within 24 hours prior to the rain event, (2) BMPs were observed to be breached, malfunctioning, or improperly implemented, and (3) there is the potential for discharge of non-visible pollutants to surface waters or a storm drain system.
- Soil amendments that have the potential to change the chemical properties, engineering properties, or erosion resistance of the soil have been applied, and there is the potential for discharge of non-visible pollutants to surface waters or a storm drain system.
- Stormwater runoff from an area contaminated by historical usage of the site has been observed to combine with stormwater runoff from the site, and there is the potential for discharge of non-visible pollutants to surface waters or a storm drain system.

7.7.1.2 Sampling Locations

Sampling locations are based on proximity to planned non-visible pollutant storage, occurrence or use; accessibility for sampling, and personnel safety. Planned non-visible pollutant sampling locations are shown on the SWPPP Drawings in Appendix B and include the locations identified in Table 7.5 through 7.10.

At this time there are no planned sampling location(s) on the Leach Field Project site. The Contractor Staging and Storage Site have been identified in the Los Osos Wastewater Collection System LUP Type 2 SWPPP for the collection of samples of runoff from planned material and waste storage areas and areas where non-visible pollutant producing construction activities are planned. In the event that materials are stored on the Leach Field Site sampling locations will be added to the SWPPP Drawings and amended to the SMARTS.

Table 7.6 Non-Visible Pollutant Sample Locations – Contractors' Yard

Sample Location Number	**Sample Location Description**	**Sample Location Latitude and Longitude** (Decimal Degrees)
None	To Be Determined	[Enter Latitude] [Enter Longitude]
None	To Be Determined	[Enter Latitude]

Table 7.6 Non-Visible Pollutant Sample Locations – Contractors' Yard

Sample Location Number	Sample Location Description	Sample Location Latitude and Longitude (Decimal Degrees)
		[Enter Longitude]

One sampling locations has been identified for the collection of samples of runoff from drainage areas where soil amendments will be applied that have the potential to affect water quality.

Table 7.7 Non-Visible Pollutant Sample Locations – Soil Amendment Areas

Sample Location Number	Sample Location	Sample Location Latitude and Longitude (Decimal Degrees)
1	Leach Field Sheet Flow possible low point	35-18-26 120-50-43
		[Enter Latitude] [Enter Longitude]

No sampling locations have been identified for the collection of samples of runoff from drainage areas contaminated by historical usage of the site.

Table 7.8 Non-Visible Pollutant Sample Locations – Areas of Historical Contamination

Sample Location Number	Sample Location	Sample Location Latitude and Longitude (Decimal Degrees)
None		
None		

One sampling location(s) has been identified for the collection of an uncontaminated sample of runoff as a background sample for comparison with the samples being analyzed for non-visible pollutants. This location(s) was selected such that the sample will not have come in contact with the operations, activities, or areas identified in Section 7.7.1 or with disturbed soils areas.

Table 7.9 Non-Visible Pollutant Sample Locations – Background (Unaffected Sample)

Sample Location Number	Sample Location	Sample Location Latitude and Longitude (Decimal Degrees)
C1	Above Leach Field Construction Area	35-18-21 120-50-44

One sampling locations have been identified for the collection of samples of run-on to the project site. Run-on from these locations has the potential to combine with discharges from the site being sampled for non-visible pollutants. These samples are intended to identify potential sources of non-visible pollutants that originate off the project site.

Table 7.10 Non-Visible Pollutant Sample Locations – Site Run-On

Sample Location Number	Sample Location	Sample Location Latitude and Longitude (Decimal Degrees)
C1	Above Leach Field Construction Area	35-18-21 120-50-44

If a stormwater visual monitoring site inspection conducted prior to or during a storm event identifies the presence of a material storage, waste storage, or operations area with spills or the potential for the discharge of non-visible pollutants to surface waters or a storm drain system that is at a location not listed above and has not been identified on the SWPPP Drawings, sampling locations will be selected by the QSP using the same rationale as that used to identify planned locations. Non-visible pollutant sampling locations shall be identified by the QSP on the pre-rain event inspection form and Rain Event Action Plan prior to a forecasted qualifying rain event.

7.7.1.3 Monitoring Preparation

Non-visible pollutant samples will be collected by:

Contractor X Yes ☐ No

Consultant ☐ Yes ☐ No

Laboratory ☐ Yes ☐ No

Samples on the project site will be collected by the following contractor sampling personnel:

Name/Telephone Number: _____

Alternate(s)/Telephone Number: _____

An adequate stock of monitoring supplies and equipment for monitoring non-visible pollutants will be available on the project site prior to a sampling event. Monitoring supplies and equipment will be stored in a cool temperature environment that will not come into contact with rain or direct sunlight. Sampling personnel will be available to collect samples in accordance with the sampling schedule. Supplies maintained at the project site will include, but are not limited to, clean powder-free nitrile gloves, sample collection equipment, coolers, appropriate number and volume of sample bottles, identification labels, re-sealable storage bags, paper

towels, personal rain gear, ice, and *Effluent Sampling Field Log Sheets* and Chain of Custody (CoC) forms, which are provided in CSMP Attachment 3 "Example Forms".

Samples on the project site will be collected by the following _____:

Company Name:

Street Address:

City, State Zip:

Telephone Number:

Point of Contact:

Name of Sampler(s):

Name of Alternate(s):

The QSP or his/her designee will contact _____ 24 hours prior to a predicted rain event or for an unpredicted event, as soon as a rain event begins if one of the triggering conditions is identified during an inspection to ensure that adequate sample collection personnel and supplies for monitoring non-visible pollutants are available and will be mobilized to collect samples on the project site in accordance with the sampling schedule.

7.7.1.4 Analytical Constituents

Table 7.11 lists the specific sources and types of potential non-visible pollutants on the project site and the water quality indicator constituent(s) for that pollutant.

Table 7.11 Potential Non-Visible Pollutants and Water Quality Indicator Constituents

Pollutant Source	Pollutant	Water Quality Indicator Constituent
LANDSCAPE PRODUCTS	FERTILIZERS	NITRATE PHOSPHATE
CLEANING PRODUCTS	SOLVENTS	ORGANIC COMPOUNDS

Table 7.11 Potential Non-Visible Pollutants and Water Quality Indicator Constituents

Pollutant Source	Pollutant	Water Quality Indicator Constituent
LANDSCAPE PRODUCTS	PESTICIEDS	GLYPHOSPATE
TREATED WOOD	CU NAPTHENATE	COPPER
CONTAMINATED SOILS	DEISEL FUEL	HYDROCARBONS

7.7.1.5 Sample Collection

Samples of discharge shall be collected at the designated non-visible pollutant sampling locations shown on the SWPPP Drawings in Appendix B or in the locations determined by observed breaches, malfunctions, leakages, spills, operational areas, soil amendment application areas, and historical site usage areas that triggered the sampling event.

Grab samples shall be collected and preserved in accordance with the methods identified in the Table, "Sample Collection, Preservation and Analysis for Monitoring Non-Visible Pollutants" provided in Section 7.7.1.6. Only the QSP, or personnel trained in water quality sampling under the direction of the QSP shall collect samples.

Sample collection and handling requirements are described in Section 7.7.7.

7.7.1.6 Sample Analysis

Samples shall be analyzed using the analytical methods identified in the Table 7.12.

Samples will be analyzed by:

Laboratory Name:

Street Address:

City, State Zip:

Telephone Number:

Point of Contact:

ELAP Certification
Number:

Samples will be delivered to the laboratory by:

Driven by Contractor	Yes	☐ No
Picked up by Laboratory Courier	☐ Yes	☐ No
Shipped	☐ Yes	☐ No

Table 7.12 Sample Collection, Preservation and Analysis for Monitoring Non-Visible Pollutants

Constituent	Analytical Method	Minimum Sample Volume	Sample Containers	Sample Preservation	Reporting Limit	Maximum Holding Time
VOC'S SOLVENTS	EPA 601/602	3X40ml	VOA GLASS	STORE @ 4 DEG C HCI TO Ph,2	1ug/L	14 Days
PESTICIDES	EPA 8081A	1x1 L	Glass amber	Store @ 4 deg C	0.1 ug/L	7 Days
HERBICIDES	EAP 8151A	1x1 L	Glass-amber	Store @ 4 deg C	Check Lab	7 Days
NITRATE	EAP 300.0	100 mL	Polypropylene	Store @ 4 deg C	0.1 mg/L	48 Hours
pH	EPA 150.1	1x100 mL	Polypropylene	None	unit less	Immediate
PESTICIDES	EPA 8081A	1x1 L	Glass amber	Store @ 4 deg C	0.1 ug/L	7 Days

Table 7.12 Sample Collection, Preservation and Analysis for Monitoring Non-Visible Pollutants

Constituent	Analytical Method	Minimum Sample Volume	Sample Containers	Sample Preservation	Reporting Limit	Maximum Holding Time
Notes:						

7.7.1.7 Data Evaluation and Reporting

The QSP shall complete an evaluation of the water quality sample analytical results.

Runoff/downgradient results shall be compared with the associated upgradient/unaffected results and any associated run-on results. Should the runoff/downgradient sample show an increased level of the tested analyte relative to the unaffected background sample, which cannot be explained by run-on results, the BMPs, site conditions, and surrounding influences shall be assessed to determine the probable cause for the increase.

As determined by the site and data evaluation, appropriate BMPs shall be repaired or modified to mitigate discharges of non-visible pollutant concentrations. Any revisions to the BMPs shall be recorded as an amendment to the SWPPP.

The General Permit prohibits the storm water discharges that contain hazardous substances equal to or in excess of reportable quantities established in 40 C.F.R. §§ 117.3 and 302.4. The results of any non-stormwater discharge results that indicate the presence of a hazardous substance in excess of established reportable quantities shall be immediately reported to the Regional Water Board and other agencies as required by 40 C.F.R. §§ 117.3 and 302.4.

Results of non-visible pollutant monitoring shall be reported in the Annual Report.

7.7.2 Sampling and Analysis Plan for pH and Turbidity in Stormwater Runoff Discharges

Sampling and analysis of runoff for pH and turbidity is required for this project. This Sampling and Analysis Plan describes the strategy for monitoring turbidity and pH levels of stormwater runoff discharges from the project site and run-on that may contribute to an exceedance of a Numeric Action Level (NAL).

Samples for turbidity will be collected from all drainage areas with disturbed soil areas and samples for pH will be collected from all drainage areas with a high risk of pH discharge.

7.7.2.1 Sampling Schedule

Stormwater runoff samples shall be collected for turbidity from all qualifying rain events that result in a discharge from the project site. At minimum, turbidity samples will be collected from each site discharge location draining a disturbed area. A minimum of three samples will be collected per day of discharge during a qualifying event. Samples should be representative of the total discharge from the project each day of discharge during the qualifying event. Typically representative samples will be spaced in time throughout the daily discharge event.

Stormwater runoff samples shall be collected for pH from all qualifying rain events that result in a discharge from the project site. At minimum, pH samples will be collected from each site discharge location during project phases and drainage areas with a high risk of pH discharge. A minimum of three samples will be collected per day of discharge during a qualifying event. Samples should be representative of the total discharge from the location each day of discharge during the qualifying event. Typically representative samples will be spaced in time throughout the daily discharge event.

Stored or collected water from a qualifying storm event when discharged shall be tested for turbidity and pH (when applicable). Stored or collected water from a qualifying event may be

sampled at the point it is released from the storage or containment area or at the site discharge location.

Run-on samples shall be collected whenever the QSP identifies that run-on has the potential to contribute to an exceedance of a NAL.

7.7.2.2 Sampling Locations

Sampling locations are based on the site runoff discharge locations and locations where run-on enters the site; accessibility for sampling; and personnel safety. Planned pH and turbidity sampling locations are shown on the SWPPP Drawings in Appendix B and include the locations identified in Table 7.13 and Table 7-14.

Two sampling location(s) on the project site and the contractor's yard have been identified for the collection of runoff samples. Table 7.13 also provides an estimate of the site's area that drains to each location.

Table 7.13 Turbidity and pH Runoff Sample Locations

Sample Location Number	Sample Location	Estimate of Site Drainage (%)
1	Leach Field Sheet Flow possible low point	90%
2	Base of Access Road @ Broderson Pavement	10%

One sampling locations have been identified for the collection of run-on samples where the run-on has the potential to contribute to an exceedance of a NAL or NEL.

[If applicable]

Table 7.14 Turbidity and pH Run-On Sample Locations

Sample Location Number	Sample Location	Sample Location Latitude and Longitude (Decimal Degrees)
C1	Above Leach Field Construction Area	35-18-21 120-50-44

The project does not receive run-on with the potential to exceed NALs or NELs.

7.7.2.3 Monitoring Preparation

Turbidity and pH samples will be collected and analyzed by:

Contractor X Yes ☐ No

Consultant ☐ Yes ☐ No

Laboratory ☐ Yes ☐ No

Samples on the project site will be collected by the following contractor sampling personnel:

Name/Telephone Number: _____

Alternate(s)/Telephone Number: _____

An adequate stock of monitoring supplies and equipment for monitoring turbidity and will be available on the project site prior to a sampling event. Monitoring supplies and equipment will be stored in a cool temperature environment that will not come into contact with rain or direct sunlight. Sampling personnel will be available to collect samples in accordance with the sampling schedule. Supplies maintained at the project site will include, but are not limited to, field meters, extra batteries; clean powder-free nitrile gloves, sample collection equipment, appropriate sample containers, paper towels, personal rain gear, and *Effluent Sampling Field Log Sheets* and CoC forms provided in CSMP Attachment 3 "Example Forms".

The contractor will obtain and maintain the field testing instruments, as identified in Section 7.7.2.6, for analyzing samples in the field by contractor sampling personnel.

Samples on the project site will be collected by the following:
_____:

Company Name:

Street Address:

City, State, Zip:

Telephone Number:

Point of Contact:

Name of Sampler(s):

Name of Alternate(s):

The QSP or his/her designee will contact _____ 24 hours prior to a predicted rain event or for an unpredicted event, as soon as a rain event begins to ensure that adequate sample collection personnel, supplies for monitoring pH and turbidity are available and will be mobilized to collect samples on the project site in accordance with the sampling schedule.

7.7.2.4 Field Parameters

Samples shall be analyzed for the constituents indicated in the table below "Sample Collection, and Analysis for Monitoring Turbidity and pH."

Table 7.15 Sample Collection and Analysis for Monitoring Turbidity and pH

Parameter	Test Method	Minimum Sample Volume[(1)]	Sample Collection Container Type	Detection Limit (minimum)
Turbidity	Field meter/probe with calibrated portable instrument	500 mL	Polypropylene or Glass (Do not collect in meter sample cells)	1 NTU
pH	Field meter/probe with calibrated portable instrument or calibrated pH test kit	100 mL	Polypropylene	0.2 pH units

Notes: [1] Minimum sample volume recommended. Specific volume requirements will vary by instrument; check instrument manufacturer instructions.

L – Liter
mL – Milliliter
NTU – Nephelometric Turbidity Unit

7.7.2.5 Sample Collection

Samples of discharge shall be collected at the designated runoff and run-on sampling locations shown on the SWPPP Drawings in Appendix B. Run-on samples shall be collected within close proximity of the point of run-on to the project.

Only personnel trained in water quality sampling and field measurements working under the direction of the QSP shall collect samples.

Sample collection and handling requirements are described in Section 7.7.7.

7.7.2.6 Field Measurements

Samples collected for field analysis, collection, analysis and equipment calibration shall be in accordance with the field instrument manufacturer's specifications.

Immediately following collection, samples for field analysis shall be tested in accordance with the field instrument manufacturer's instructions and results recorded on the *Effluent Sampling Field Log Sheet*.

The field instrument(s) listed in Table 7.16 will be used to analyze the following constituents:

Table 7.16 Field Instruments

Field Instrument (Manufacturer and Model)	Constituent
_____	pH
_____	Turbidity

The manufacturers' instructions are included in CSMP Attachment 4 "Field Meter Instructions". Field sampling staff shall review the instructions prior to each sampling event and follow the instructions in completing measurement of the samples.

- The instrument(s) shall be maintained in accordance with manufacturer's instructions.
- The instrument(s) shall be calibrated before each sampling and analysis event.
- Maintenance and calibration records shall be maintained with the SWPPP.

The QSP may authorize alternate equipment provided that the equipment meets the Construction General Permit's requirements and the manufacturers' instructions for calibration and use are added to CSMP Attachment 4 "Field Meter Instructions".

7.7.2.7 Data Evaluation and Reporting

Numeric Action Levels

This project is subject to NALs for pH and turbidity (Table 7.17). Compliance with the NAL for pH and turbidity is based on a weighted daily average. Upon receiving the field log sheets, the QSP shall immediately calculate the arithmetic average of the pH and turbidity samples to determine if the NALs, shown in the table below, have been exceeded.

Table 7.17 Numeric Action Levels

Parameter	Unit	Daily Average
pH	pH units	Lower NAL = 6.5 Upper NAL = 8.5
Turbidity	NTU	250 NTU

The QSP shall within 5 days of the sample collection submit copies of the completed *Effluent Sampling Field Log Sheets* to QSD and/or LRP.

In the event that the pH or turbidity NAL is exceeded, the QSP shall immediately notify QSD and/or LRP and investigate the cause of the exceedance and identify corrective actions.

Exceedances of NALs shall be electronically reported to the State Water Board by QSD and/or LRP through the SMARTs system within 10 days of the conclusion of the storm event. If requested by the Regional Board, a NAL Exceedance report will be submitted. The NAL Exceedance Report must contain the following information:

- Analytical method(s), method reporting unit(s), and MDL(s) of each parameter;
- Date, place, time of sampling, visual observation, and/or measurements, including precipitation; and
- Description of the current BMPs associated with the sample that exceeded the NAL and the proposed corrective actions taken.

7.7.3 Additional Monitoring Following an NEL Exceedance

This project is not subject to NELs.

7.7.4 Sampling and Analysis Plan for Non-Stormwater Discharges

This Sampling and Analysis Plan for non-stormwater discharges describes the sampling and analysis strategy and schedule for monitoring pollutants in authorized and unauthorized non-stormwater discharges from the project site in accordance with the requirements of the Construction General Permit.

Sampling of non-stormwater discharges will be conducted when an authorized or unauthorized non-stormwater discharge is observed discharging from the project site. In the event that non-stormwater discharges run-on to the project site from offsite locations, and this run-on have the potential to contribute to a violation of a NAL, the run-on will also be sampled.

The following authorized non-stormwater discharges identified in Section 2.7, have the potential to be discharged from the project site.

- de-chlorinated potable water sources such as: fire hydrant flushing
- irrigation of vegetative erosion control measures
- pipe flushing and testing
- water to control dust
- uncontaminated groundwater dewatering as long as it is either delivered to the Mid-Town Detention Basin or to Broderson Leach Field Site.

In addition to the above authorized stormwater discharges, some construction activities have the potential to result in an unplanned (unauthorized) non-stormwater discharge if BMPs fail. These activities include:

- Asphalt Grinding
- Concrete Cutting
- Dust Control
- Water Line Breaks

7.7.4.1 Sampling Schedule

Samples of authorized or unauthorized non-stormwater discharges shall be collected when they are observed.

7.7.4.2 Sampling Locations

Samples shall be collected from the discharge point of the construction site where the non-stormwater discharge is running off the project site. Site discharge locations are shown on the SWPPP Drawings in SWPPP Appendix A and include the locations identified below.

Two sampling location(s) on the project site and the contractor's yard have been identified where non-stormwater discharges may runoff from the project site.

Sample Location Number	Sample Location	Sample Location Latitude and Longitude (Decimal Degrees)
1	Leach Field Sheet Flow possible low point	35-18-26 120-50-43
2	Base of Access Road	35-18-30 120-50-35

One sampling locations has been identified for the collection of non-stormwater discharges that run-on to the project site.

Sample Location Number	Sample Location	Sample Location Latitude and Longitude (Decimal Degrees)
C1	Above Leach Field Construction Area	35-18-21 120-50-44

7.7.4.3 Monitoring Preparation

Non-stormwater discharge samples will be collected by:

Contractor X Yes ☐ No

Consultant ☐ Yes ☐ No

Laboratory ☐ Yes ☐ No

Samples on the project site will be collected by the following contractor sampling personnel:

Name/Telephone Number: _____

Alternate(s)/Telephone Number: _____

An adequate stock of monitoring supplies and equipment for monitoring non-stormwater discharges will be available on the project site. Monitoring supplies and equipment will be stored in a cool temperature environment that will not come into contact with rain or direct sunlight. Personnel trained in sampling will be available to collect samples in accordance with the sampling schedule. Supplies maintained at the project site will include, but are not limited to, clean powder-free nitrile gloves, sample collection equipment, field meters, coolers, appropriate number and volume of sample bottles, identification labels, re-sealable storage bags, paper towels, personal rain gear, ice, and *Effluent Sampling Field Log Sheets* and CoC forms provided in CSMP Attachment 3 “Example Forms”.

The contractor will obtain and maintain the field testing instruments, as identified in Section 7.7.2, for analyzing samples in the field by contractor sampling personnel.

Samples on the project site will be collected by the following _____:

Company Name:

Street Address:

City, State Zip:

Telephone Number:

Point of Contact:

Name of Sampler(s):

Name of Alternate(s):

The QSP or his/her designee will contact _____, 24 hours prior to a planned non-stormwater discharge or as soon as an unplanned non-stormwater discharge is observed to ensure that adequate sample collection personnel, supplies for non-stormwater discharge monitoring are available and will be mobilized to collect samples on the project site in accordance with the sampling schedule.

7.7.4.4 Analytical Constituents

All non-stormwater discharges that flow through a disturbed area shall, at minimum, be monitored for turbidity.

All non-stormwater discharges that flow through an area where they are exposed to pH altering materials shall be monitored for pH.

The QSP shall identify additional pollutants to be monitored for each non-stormwater discharge incident based on the source of the non-stormwater discharge. If the source of an unauthorized non-stormwater discharge is not known, monitoring for pH, turbidity, MBAS, TOC, and residual chlorine or chloramines is recommended to help identify the source of the discharge.

Non-stormwater discharge run-on shall be monitored, at minimum, for pH and turbidity. The QSP shall identify additional pollutants to be monitored for each non-stormwater discharge incident based on the source of the non-stormwater discharge. If the source of an unauthorized non-stormwater discharge is not known, monitoring for pH, turbidity, MBAS, TOC, and residual chlorine or chloramines is recommended to help identify the source of the discharge.

Table 7.21 lists the specific sources and types of potential non-visible pollutants on the project site and the water quality indicator constituent(s) for that pollutant.

Table 7.21 Potential Non-Stormwater Discharge Pollutants and Water Quality Indicator Constituents

Pollutant Source	Pollutant	Water Quality Indicator Constituent
Disturbed Areas	Sediment	Turbidity
Concrete Work	pH	pH

Table 7.21 Potential Non-Stormwater Discharge Pollutants and Water Quality Indicator Constituents

Pollutant Source	Pollutant	Water Quality Indicator Constituent
Batteries	Acid	pH
Landscape Products	Fertilizers	Nitrate Phosphate
Cleaning Products	Solvents	Organic Compounds

7.7.4.5 Sample Collection

Samples shall be collected at the discharge locations where the non-stormwater discharge is leaving the project site. Potential discharge locations are shown on the SWPPP Drawings in Appendix B and identified in Section 7.7.4.2.

Grab samples shall be collected and preserved in accordance with the methods identified in Table 7.22. Only personnel trained in water quality sampling under the direction of the QSP shall collect samples.

Sample collection and handling requirements are described in Section 7.7.7.

7.7.4.6 Sample Analysis

Samples shall be analyzed using the analytical methods identified in Table 7.22.

7.7.4.7 Data Evaluation and Reporting

The QSP shall complete an evaluation of the water quality sample analytical results.

Turbidity and pH results shall be evaluated for compliance with NALs as identified in Section 7.7.2.7.

Runoff results shall also be evaluated for the constituents suspected in the non-stormwater discharge. Should the runoff sample indicate the discharge of a pollutant which cannot be explained by run-on results, the BMPs, site conditions, and surrounding influences shall be assessed to determine the probable cause for the increase.

As determined by the site and data evaluation, appropriate BMPs shall be repaired or modified to mitigate discharges of non-visible pollutant concentrations. Any revisions to the BMPs shall be recorded as an amendment to the SWPPP.

Non-storm water discharge results shall be submitted with the Annual Report.

The General Permit prohibits the non-storm water discharges that contain hazardous substances equal to or in excess of reportable quantities established in 40 C.F.R. §§ 117.3 and 302.4. The results of any non-stormwater discharge results that indicate the presence of a hazardous substance in excess of established reportable quantities shall be immediately reported to the Regional Water Board.

Table 7.22 Sample Collection, Preservation and Analysis for Monitoring Pollutants in Non-Stormwater Discharges

Constituent	Analytical Method	Minimum Sample Volume	Sample Bottle	Sample Preservation	Reporting Limit	Maximum Holding Time
VOC'S SOLVENTS	EPA 601/602	3X40ml	VOA GLASS	STORE @ 4 DEG C HCl TO Ph,2	1ug/L	14 Days
PESTICIDES	EPA 8081A	1x1 L	Glass amber	Store @ 4 deg C	0.1 ug/L	7 Days
HERBICIDES	EAP 8151A	1x1 L	Glass-amber	Store @ 4 deg C	Check Lab	7 Days
NITRATE	EAP 300.0	100 mL	Polypropylene	Store @ 4 deg C	0.1 mg/L	48 Hours
pH	EPA 150.1	1x100 mL	Polypropylene	None	unit less	Immedia te
PESTICIDES	EPA 8081A	1x1 L	Glass amber	Store @ 4 deg C	0.1 ug/L	7 Days
Notes:						

7.7.5 Sampling and Analysis Plan for Other Pollutants Required by the Regional Water Board

The Regional Water Board has not specified monitoring for additional pollutants.

7.7.6 Training of Sampling Personnel

Sampling personnel shall be trained to collect, maintain, and ship samples in accordance with the Surface Water Ambient Monitoring program (SWAMP) 2008 Quality Assurance Program Plan (QAPrP). Training records of designated contractor sampling personnel are provided in Appendix K.

The stormwater sampler(s) and alternate(s) have received the following stormwater sampling training:

Name	Training

The stormwater sampler(s) and alternates have the following stormwater sampling experience:

Name	Experience

7.7.7 Sample Collection and Handling

7.7.7.1 Sample Collection

Samples shall be collected at the designated sampling locations shown on the SWPPP Drawings and listed in the preceding sections. Samples shall be collected, maintained and shipped in accordance with the SWAMP 2008 Quality Assurance Program Plan (QAPrP).

Grab samples shall be collected and preserved in accordance with the methods identified in preceding sections.

To maintain sample integrity and prevent cross-contamination, sample collection personnel shall follow the protocols below.

- Collect samples (for laboratory analysis) only in analytical laboratory-provided sample containers;
- Wear clean, powder-free nitrile gloves when collecting samples;
- Change gloves whenever something not known to be clean has been touched;
- Change gloves between sites;
- Decontaminate all equipment (e.g. bucket, tubing) prior to sample collection using a trisodium phosphate water wash, distilled water rinse, and final rinse with distilled water. (Dispose of wash and rinse water appropriately, i.e., do not discharge to storm drain or receiving water). Do not decontaminate laboratory provided sample containers;

- Do not smoke during sampling events;
- Never sample near a running vehicle;
- Do not park vehicles in the immediate sample collection area (even non-running vehicles);
- Do not eat or drink during sample collection; and
- Do not breathe, sneeze, or cough in the direction of an open sample container.

The most important aspect of grab sampling is to collect a sample that represents the entire runoff stream. Typically, samples are collected by dipping the collection container in the runoff flow paths and streams as noted below.

i. For small streams and flow paths, simply dip the bottle facing upstream until full.
ii. For larger stream that can be safely accessed, collect a sample in the middle of the flow stream by directly dipping the mouth of the bottle. Once again making sure that the opening of the bottle is facing upstream as to avoid any contamination by the sampler.
iii. For larger streams that cannot be safely waded, pole-samplers may be needed to safely access the representative flow.
iv. Avoid collecting samples from ponded, sluggish or stagnant water.
v. Avoid collecting samples directly downstream from a bridge as the samples can be affected by the bridge structure or runoff from the road surface.

Note, that depending upon the specific analytical test, some containers may contain preservatives. These containers should **never** be dipped into the stream, but filled indirectly from the collection container.

7.7.7.2 Sample Handling

Turbidity and pH measurements must be conducted immediately. Do not store turbidity or pH samples for later measurement.

Samples for laboratory analysis must be handled as follows. Immediately following sample collection:

- Cap sample containers;
- Complete sample container labels;
- Sealed containers in a re-sealable storage bag;
- Place sample containers into an ice-chilled cooler;
- Document sample information on the *Effluent Sampling Field Log Sheet*; and
- Complete the CoC.

All samples for laboratory analysis must be maintained between 0-6 degrees Celsius during delivery to the laboratory. Samples must be kept on ice, or refrigerated, from sample collection through delivery to the laboratory. Place samples to be shipped inside coolers with ice. Make sure the sample bottles are well packaged to prevent breakage and secure cooler lids with packaging tape.

Ship samples that will be laboratory analyzed to the analytical laboratory right away. Hold times are measured from the time the sample is collected to the time the sample is analyzed. The General Permit requires that samples be received by the analytical laboratory within 48 hours of the physical sampling (unless required sooner by the analytical laboratory).

Laboratory Name:

Address:

City, State Zip:

Telephone Number:

Point of Contact:

7.7.7.3 Sample Documentation Procedures

All original data documented on sample bottle identification labels, *Effluent Sampling Field Log Sheet*, and CoCs shall be recorded using waterproof ink. These shall be considered accountable documents. If an error is made on an accountable document, the individual shall make corrections by lining through the error and entering the correct information. The erroneous information shall not be obliterated. All corrections shall be initialed and dated.

Duplicate samples shall be identified consistent with the numbering system for other samples to prevent the laboratory from identifying duplicate samples. Duplicate samples shall be identified in the Effluent Sampling Field Log Sheet.

Sample documentation procedures include the following:

Sample Bottle Identification Labels: Sampling personnel shall attach an identification label to each sample bottle. Sample identification shall uniquely identify each sample location.

Field Log Sheets: Sampling personnel shall complete the *Effluent Sampling Field Log Sheet* and *Receiving Water Sampling Field Log Sheet* for each sampling event, as appropriate.

Chain of Custody: Sampling personnel shall complete the CoC for each sampling event for which samples are collected for laboratory analysis. The sampler will sign the CoC when the sample(s) is turned over to the testing laboratory or courier.

7.8 Active Treatment System Monitoring

An Active Treatment System (ATS) will be deployed on the site?

☐ Yes X No

This project does not require a project specific Sampling and Analysis Plan for an ATS because deployment of an ATS is not planned.

7.9 Bioassessment Monitoring

This project is not subject to bioassessment monitoring because it is not a Risk Level 3 project.

7.10 Watershed Monitoring Option

This project is not participating in a watershed monitoring option.

7.11 Quality Assurance and Quality Control

An effective Quality Assurance and Quality Control (QA/QC) plan shall be implemented as part of the CSMP to ensure that analytical data can be used with confidence. QA/QC procedures to be initiated include the following:

- Field logs;
- Clean sampling techniques;
- CoCs;
- QA/QC Samples; and
- Data verification.

Each of these procedures is discussed in more detail in the following sections.

7.11.1 Field Logs

The purpose of field logs is to record sampling information and field observations during monitoring that may explain any uncharacteristic analytical results. Sampling information to be included in the field log include the date and time of water quality sample collection, sampling personnel, sample container identification numbers, and types of samples that were collected. Field observations should be noted in the field log for any abnormalities at the sampling location (color, odor, BMPs, etc.). Field measurements for pH and turbidity should also be recorded in the field log. A Visual Inspection Field Log, an Effluent Sampling Field Log Sheet, are included in CSMP Attachment 3 "Example Forms".

7.11.2 Clean Sampling Techniques

Clean sampling techniques involve the use of certified clean containers for sample collection and clean powder-free nitrile gloves during sample collection and handling. As discussed in Section 7.7.7, adoption of a clean sampling approach will minimize the chance of field contamination and questionable data results.

7.11.3 Chain of Custody

The sample CoC is an important documentation step that tracks samples from collection through analysis to ensure the validity of the sample. Sample CoC procedures include the following:

- Proper labeling of samples;
- Use of CoC forms for all samples; and
- Prompt sample delivery to the analytical laboratory.

Analytical laboratories usually provide CoC forms to be filled out for sample containers. An example CoC is included in CSMP Attachment 3 "Example Forms".

7.11.4 QA/QC Samples

QA/QC samples provide an indication of the accuracy and precision of the sample collection; sample handling; field measurements; and analytical laboratory methods. The following types of QA/QC will be conducted for this project:

X Field Duplicates at a frequency of 5 percent or 1 duplicate minimum per sampling event
(Required for all sampling plans with field measurements or laboratory analysis)

X Equipment Blanks at a frequency of 5 percent or 1 duplicate minimum per sampling event
(Only needed if equipment used to collect samples could add the pollutants to sample)

X Field Blanks at a frequency of 5 percent or 1 duplicate minimum per sampling event (Only required if sampling method calls for field blanks)

X Travel Blanks at a frequency of 5 percent or 1 duplicate minimum per sampling event (Required for sampling plans that include VOC laboratory analysis)

7.11.4.1 Field Duplicates

Field duplicates provide verification of laboratory or field analysis and sample collection. Duplicate samples shall be collected, handled, and analyzed using the same protocols as primary samples. The sample location where field duplicates are collected shall be randomly selected from the discharge locations. Duplicate samples shall be collected immediately after the primary sample has been collected. Duplicate samples must be collected in the same manner and as close in time as possible to the original sample. Duplicate samples shall not influence any evaluations or conclusion.

7.11.4.2 Equipment Blanks

Equipment blanks provide verification that equipment has not introduced a pollutant into the sample. Equipment blanks are typically collected when:

- New equipment is used;
- Equipment that has been cleaned after use at a contaminated site;
- Equipment that is not dedicated for surface water sampling is used; or
- Whenever a new lot of filters is used when sampling metals.

7.11.4.3 Field Blanks

Field blanks assess potential sample contamination levels that occur during field sampling activities. De-ioninzed water field blanks are taken to the field, transferred to the appropriate container, and treated the same as the corresponding sample type during the course of a sampling event.

7.11.4.4 Travel Blanks

Travel blanks assess the potential for cross-contamination of volatile constituents between sample containers during shipment from the field to the laboratory. De-ioninzed water blanks are taken along for the trip and held unopened in the same cooler with the VOC samples.

7.11.5 Data Verification

After results are received from the analytical laboratory, the QSP shall verify the data to ensure that it is complete, accurate, and the appropriate QA/QC requirements were met. Data must be verified as soon as the data reports are received. Data verification shall include:

- Check the CoC and laboratory reports.
  Make sure all requested analyses were performed and all samples are accounted for in the reports.
- Check laboratory reports to make sure hold times were met and that the reporting levels meet or are lower than the reporting levels agreed to in the contract.
- Check data for outlier values and follow up with the laboratory.
  Occasionally typographical errors, unit reporting errors, or incomplete results are

reported and should be easily detected. These errors need to be identified, clarified, and corrected quickly by the laboratory. The QSP should especially note data that is an order of magnitude or more different than similar locations, or is inconsistent with previous data from the same location.

- Check laboratory QA/QC results.
  EPA establishes QA/QC checks and acceptable criteria for laboratory analyses. These data are typically reported along with the sample results. The QSP shall evaluate the reported QA/QC data to check for contamination (method, field, and equipment blanks), precision (laboratory matrix spike duplicates), and accuracy (matrix spikes and laboratory control samples). When QA/QC checks are outside acceptable ranges, the laboratory must flag the data, and usually provides an explanation of the potential impact to the sample results.
- Check the data set for outlier values and, accordingly, confirm results and re-analyze samples where appropriate.
  Sample re-analysis should only be undertaken when it appears that some part of the QA/QC resulted in a value out of the accepted range. Sample results may not be discounted unless the analytical laboratory identifies the required QA/QC criteria were not met and confirms this in writing.

Field data including inspections and observations must be verified as soon as the field logs are received, typically at the end of the sampling event. Field data verification shall include:

- Check field logs to make sure all required measurements were completed and appropriately documented;
- Check reported values that appear out of the typical range or inconsistent;
  Follow-up immediately to identify potential reporting or equipment problems, if appropriate, recalibrate equipment after sampling;
- Verify equipment calibrations;
- Review observations noted on the field logs; and
- Review notations of any errors and actions taken to correct the equipment or recording errors.

7.12 Records Retention

All records of stormwater monitoring information and copies of reports (including Annual Reports) must be retained for a period of at least three years from date of submittal or longer if required by the Regional Water Board.

Results of visual monitoring, field measurements, and laboratory analyses must be kept in the SWPPP along with CoCs, and other documentation related to the monitoring.

Records are to be kept onsite while construction is ongoing. Records to be retained include:

- The date, place, and time of inspections, sampling, visual observations, and/or measurements, including precipitation;
- The individual(s) who performed the inspections, sampling, visual observation, and/or field measurements;
- The date and approximate time of field measurements and laboratory analyses;
- The individual(s) who performed the laboratory analyses;

- A summary of all analytical results, the method detection limits and reporting limits, and the analytical techniques or methods used;
- Rain gauge readings from site inspections;
- QA/QC records and results;
- Calibration records;
- Visual observation and sample collection exemption records;
- The records of any corrective actions and follow-up activities that resulted from analytical results, visual observations, or inspections; and
- NAL Exceedance Reports.

CSMP Attachment 1: Weather Reports

CSMP Attachment 2: Monitoring Records

CSMP Attachment 3: Example Forms

For this section see forms provided below or by Caltrans on their Construction Forms Web Site at: http://www.dot.ca.gov/hq/construc/forms.htm or the Contractor may provide his own forms to be reviewed and approved by the Project QSD and LRP.

Rain Gauge Log Sheet				
Construction Site Name:				
WDID #:				
Date (mm/dd/yy)	Time (24-hr)	Initials	Rainfall Depth (Inches)	Notes:

Risk Level 1, 2, 3 ***Visual Inspection Field Log Sheet***						
Date and Time of Inspection:				Report Date:		
Inspection Type:	☐ Weekly	☐ Before predicted rain	☐ During rain event	☐ Following qualifying rain event	☐ Contained stormwater release	☐ Quarterly non-stormwater

Site Information	
Construction Site Name:	
Construction stage and completed activities:	Approximate area of exposed site:

Weather and Observations			
Date Rain Predicted to Occur:		Predicted % chance of rain:	
Estimate storm beginning: _____ (date and time)	Estimate storm duration:_____ (hours)	Estimate time since last storm: _____ (days or hours)	Rain gauge reading:_____ (inches)

Observations: If yes identify location		
Odors	Yes ☐	No ☐
Floating material	Yes ☐	No ☐
Suspended Material	Yes ☐	No ☐
Sheen	Yes ☐	No ☐
Discolorations	Yes ☐	No ☐
Turbidity	Yes ☐	No ☐

Site Inspections			
Outfalls or BMPs Evaluated		**Deficiencies Noted**	
(add additional sheets or attached detailed BMP Inspection Checklists)			
Photos Taken:	Yes ☐	No ☐	Photo Reference IDs:

Corrective Actions Identified (note if SWPPP/REAP change is needed)

Inspector Information	
Inspector Name:	Inspector Title:
Signature:	Date:

Risk Level 2 ***Effluent Sampling Field Log Sheets***			
Construction Site Name:		Date:	Time Start:
Sampler:			
Sampling Event Type:	☐ Stormwater	☐ Non-stormwater	☐ Non-visible pollutant

Field Meter Calibration	
pH Meter ID No./Desc.: Calibration Date/Time:	Turbidity Meter ID No./Desc.: Calibration Date/Time:

Field pH and Turbidity Measurements			
Discharge Location Description	pH	Turbidity	Time

Grab Samples Collected		
Discharge Location Description	Sample Type	Time

Additional Sampling Notes:
Time End:

Risk Level 3 ***Effluent Sampling Field Log Sheets***				
Construction Site Name:		Date:		Time Start:
Sampler:				
Sampling Event Type:	☐ Stormwater	☐ Non-stormwater	☐ Non-visible pollutant	☐ Post NEL Exceedance

Field Meter Calibration	
pH Meter ID No./Desc.: Calibration Date/Time:	Turbidity Meter ID No./Desc.: Calibration Date/Time:

Field pH and Turbidity Measurements			
Discharge Location Description	pH	Turbidity	Time

Grab Samples Collected			
Discharge Location Description	SSC	Other (specify)	Time

Additional Sampling Notes:
Time End:

Risk Level 3 ***Receiving Water Sampling Field Log Sheets***		
Construction Site Name:	Date:	Time Start:
Sampler:		
Receiving Water Description and Observations		
Receiving Water Name/ID:		
Observations:		
Odors	Yes ☐ No ☐	
Floating material	Yes ☐ No ☐	
Suspended Material	Yes ☐ No ☐	
Sheen	Yes ☐ No ☐	
Discolorations	Yes ☐ No ☐	
Turbidity	Yes ☐ No ☐	
Field Meter Calibration		
pH Meter ID No./Desc.: Calibration Date/Time:	Turbidity Meter ID No./Desc.: Calibration Date/Time:	

Field pH and Turbidity Measurements and SSC Grab Sample			
Upstream Location			
Type	Result	Time	Notes
pH			
Turbidity			
SSC	Collected Yes ☐ No ☐		
Downstream Location			
Type	Result	Time	Notes
pH			
Turbidity			
SSC	Collected Yes ☐ No ☐		

Additional Sampling Notes:
Time End:

NAL or NEL Exceedance Evaluation Summary Report	Page __ of __
Project Name	
Project WDID	
Project Location	
Date of Exceedance	
Type of Exceedance	**NAL Daily Average** ☐ **pH** ☐ **Turbidity** **NEL Daily Average** ☐ **pH** ☐ **Turbidity** ☐ **Other (specify) _____**
Measurement or Analytical Method	☐ **Field meter** **(Sensitivity: _____)** ☐ **Lab method (specify) _____** **(Reporting Limit: _____)** **(MDL: _____)**
Calculated Daily Average	☐ **pH _ pH units** ☐ **Turbidity __ NTU**
Rain Gauge Measurement	**_____ inches**
Compliance Storm Event	**_____ inches (5-year, 24-hour event)**
Visual Observations on Day of Exceedance	

NAL or NEL Exceedance Evaluation Summary Report	Page __ of __
Description of BMPs in Place at Time of Event	
Initial Assessment of Cause	
Corrective Actions Taken (deployed after exceedance)	
Additional Corrective Actions Proposed	
Report Completed By	_____ **(Print Name, Title)**
Signature	_____

CHAIN-OF-CUSTODY **DATE:** **Lab ID:**

DESTINATION LAB:							REQUESTED ANALYSIS				Notes:
ATTN:											
ADDRESS:											
Office Phone:											
Cell Phone:											
SAMPLED BY:											
Contact:											
Project Name											
Client Sample ID	**Sample Date**	**Sample Time**	**Sample Matrix**	**Container #**	**Container Type**	**Container Pres.**					

SENDER COMMENTS:	**RELINQUISHED BY**	
	Signature:	
	Print:	
	Company:	
	Date:	TIME:
LABORATORY COMMENTS:	**RECEIVED BY**	
	Signature:	
	Print:	
	Company:	
	Date:	TIME:

CSMP Attachment 4: Field Meter Instructions

Contractor shall provide all instructions for their Field Meter(s) in this section:

CSMP Attachment 5: Supplemental Information

Documents that are a part of this SWPPP are as follows:

The following reports and information are contained in the LOWWCS LUP Type 2 SWPPP or the Construction Documents:

1. Soils Reports and/or other documents referenced in the Construction Documents.
2. Dewatering Plan by CDM Smith that is a part of the Construction Documents.
3. Letter from the RWQCB Central Coast Region pertaining to Construction Dewatering Dated May 27, 2011 attached as Appendix O of the LOWWCS LUP Type 2 SWPPP.

Section 8 References

Project Plans and Specifications No. ????????????? dated ??????????, prepared by CDM Smith, Inc.

State Water Resources Control Board (2009). Order 2009-0009-DWQ, NPDES General Permit No. CAS000002: National Pollutant Discharges Elimination System (NPDES) California General Permit for Storm Water Discharge Associated with Construction and Land Disturbing Activities. Available on-line at: http://www.waterboards.ca.gov/water_issues/programs/stormwater/construction.shtml.

State Water Resources Control Board (2010). Order 2010-0014-DWQ, NPDES General Permit No. CAS000002: National Pollutant Discharges Elimination System (NPDES) California General Permit for Storm Water Discharge Associated with Construction and Land Disturbing Activities. Available on-line at: http://www.waterboards.ca.gov/water_issues/programs/stormwater/construction.shtml.

The following documents are a part of the LOWWCS LUP Type 2 SWPPP for Areas A-D B-C and Pump Stations:

1. Soils Reports and/or other documents referenced in the Construction Documents.
2. Dewatering Plan by CDM Smith that is a part of the Construction Documents.
3. Letter from the RWQCB Central Coast Region pertaining to Construction Dewatering Dated May 27, 2011 Appendix O of the LOWWCS LUP Type 2 SWPPP

CASQA 2009, *Stormwater BMP Handbook Portal: Construction*, November 2009, www.casqa.org

Appendix A: Calculations

BRODERSON LEACH FIELD RISK ASSESSMENT

	A	B	C
1	**Sediment Risk Factor Worksheet**		**Entry**
2	**A) R Factor**		
3	Analyses of data indicated that when factors other than rainfall are held constant, soil loss is directly proportional to a rainfall factor composed of total storm kinetic energy (E) times the maximum 30-min intensity (I30) (Wischmeier and Smith, 1958). The numerical value of R is the average annual sum of EI30 for storm events during a rainfall record of at least 22 years. "Isoerodent" maps were developed based on R values calculated for more than 1000 locations in the Western U.S. Refer to the link below to determine the R factor for the project site.		
4	http://cfpub.epa.gov/npdes/stormwater/LEW/lewCalculator.cfm		
5	**R Factor Value**		8.68
6	**53.34B) K Factor (weighted average, by area, for all site soils)**		
7	The soil-erodibility factor K represents: (1) susceptibility of soil or surface material to erosion, (2) transportability of the sediment, and (3) the amount and rate of runoff given a particular rainfall input, as measured under a standard condition. Fine-textured soils that are high in clay have low K values (about 0.05 to 0.15) because the particles are resistant to detachment. Coarse-textured soils, such as sandy soils, also have low K values (about 0.05 to 0.2) because of high infiltration resulting in low runoff even though these particles are easily detached. Medium-textured soils, such as a silt loam, have moderate K values (about 0.25 to 0.45) because they are moderately susceptible to particle detachment and they produce runoff at moderate rates. Soils having a high silt content are especially susceptible to erosion and have high K values, which can exceed 0.45 and can be as large as 0.65. Silt-size particles are easily detached and tend to crust, producing high rates and large volumes of runoff. Use Site-specific data must be submitted.		
8	Site-specific K factor guidance		
9	**K Factor Value**		0.1
10	**C) LS Factor (weighted average, by area, for all slopes)**		
11	The effect of topography on erosion is accounted for by the LS factor, which combines the effects of a hillslope-length factor, L, and a hillslope-gradient factor, S. Generally speaking, as hillslope length and/or hillslope gradient increase, soil loss increases. As hillslope length increases, total soil loss and soil loss per unit area increase due to the progressive accumulation of runoff in the downslope direction. As the hillslope gradient increases, the velocity and erosivity of runoff increases. Use the LS table located in separate tab of this spreadsheet to determine LS factors. Estimate the weighted LS for the site prior to construction.		
12	LS Table		
13	**LS Factor Value**		2.66
14			
15	**Watershed Erosion Estimate (=RxKxLS) in tons/acre**		2.30888
16	**Site Sediment Risk Factor**		**Low**
17	Low Sediment Risk: < 15 tons/acre		
18	Medium Sediment Risk: >=15 and <75 tons/acre		
19	High Sediment Risk: >= 75 tons/acre		
20			

Receiving Water (RW) Risk Factor Worksheet	Entry	Score
A. Watershed Characteristics	**YES**	
A.1. Does the disturbed area discharge (either directly or indirectly) to a **303(d)-listed waterbody impaired by sediment**? For help with impaired waterbodies please check the attached worksheet or visit the link below: 2006 Approved Sediment-impared WBs Worksheet http://www.waterboards.ca.gov/water_issues/programs/tmdl/303d_lists2006_epa.shtml **OR** A.2. Does the disturbed area discharge to a waterbody with designated beneficial uses of SPAWN & COLD & MIGRATORY? http://www.ice.ucdavis.edu/geowbs/asp/wbquse.asp	**YES**	**High**

Combined Risk Level Matrix

Receiving Water Risk	Sediment Risk: Low	Sediment Risk: Medium	Sediment Risk: High
Low	Level 1	Level 2	
High	Level 2		Level 3

Project Sediment Risk: Low

Project RW Risk: High

Project Combined Risk: Level 2

Query Result

BRODERSON LEACH FIELD R FACTOR

California State

AN EROSIVITY INDEX VALUE OF **8.68** HAS BEEN DETERMINED
FOR THE CONSTRUCTION PERIOD OF **4/1/2012 - 10/15/2012.**

An erosivity index of 5.0 or less is in compliance with the EPA standard and qualifies for a permitting waiver.

An erosivity index exceeding 5.0 is **NOT IN COMPLIANCE** with the EPA standard which requires that you submit an application for a construction permit.

Do you wish to change the period of construction if not in compliance? ◉ **Yes** ○ **No**

PRINT THIS PAGE FOR YOUR RECORDS

NEXT

Google earth

feet 4000

km 1

BRODERSON LEACH FIELD K FACTOR

County of San Luis Obispo
Los Osos, California

Los Osos Wastewater Collection System Project

BRODERSON LEACH FIELD SWPPP DRAWINGS

ground up
Design & Construction Management
Robert W. Carnes
Registered Construction Inspector RC #5291
CPESC #854 SE Q SD/F #IN 161
p.o. box 1583, paso robles, ca 93447
ph & fax 805-227-4159
cell: 440-9880
email: rwcarnes@earthlink.net

CERTIFIED PROFESSIONAL IN EROSION AND SEDIMENT CONTROL
CPESC®

N:\ACAD2008\los osos\01-sheets\A\A-GEN\ A-G-001 01/18/12 11:20 talbotwk

LOCATION MAP

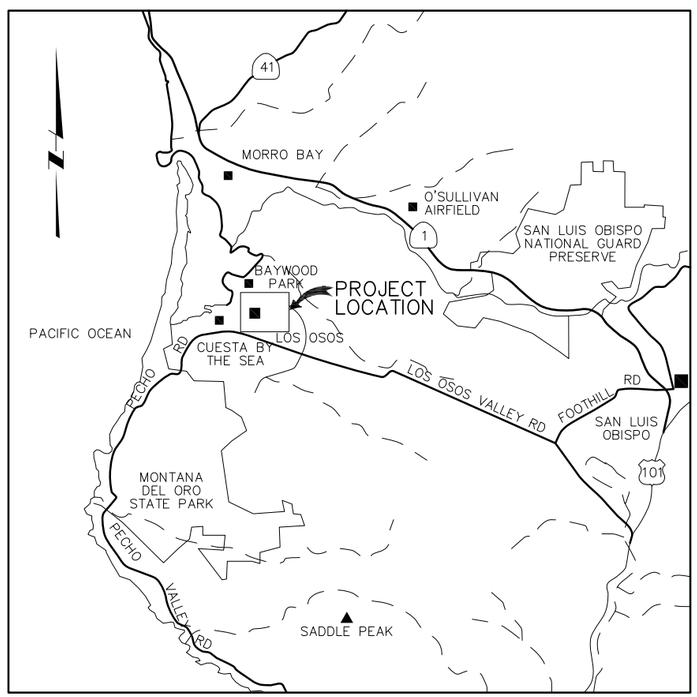

VICINITY MAP

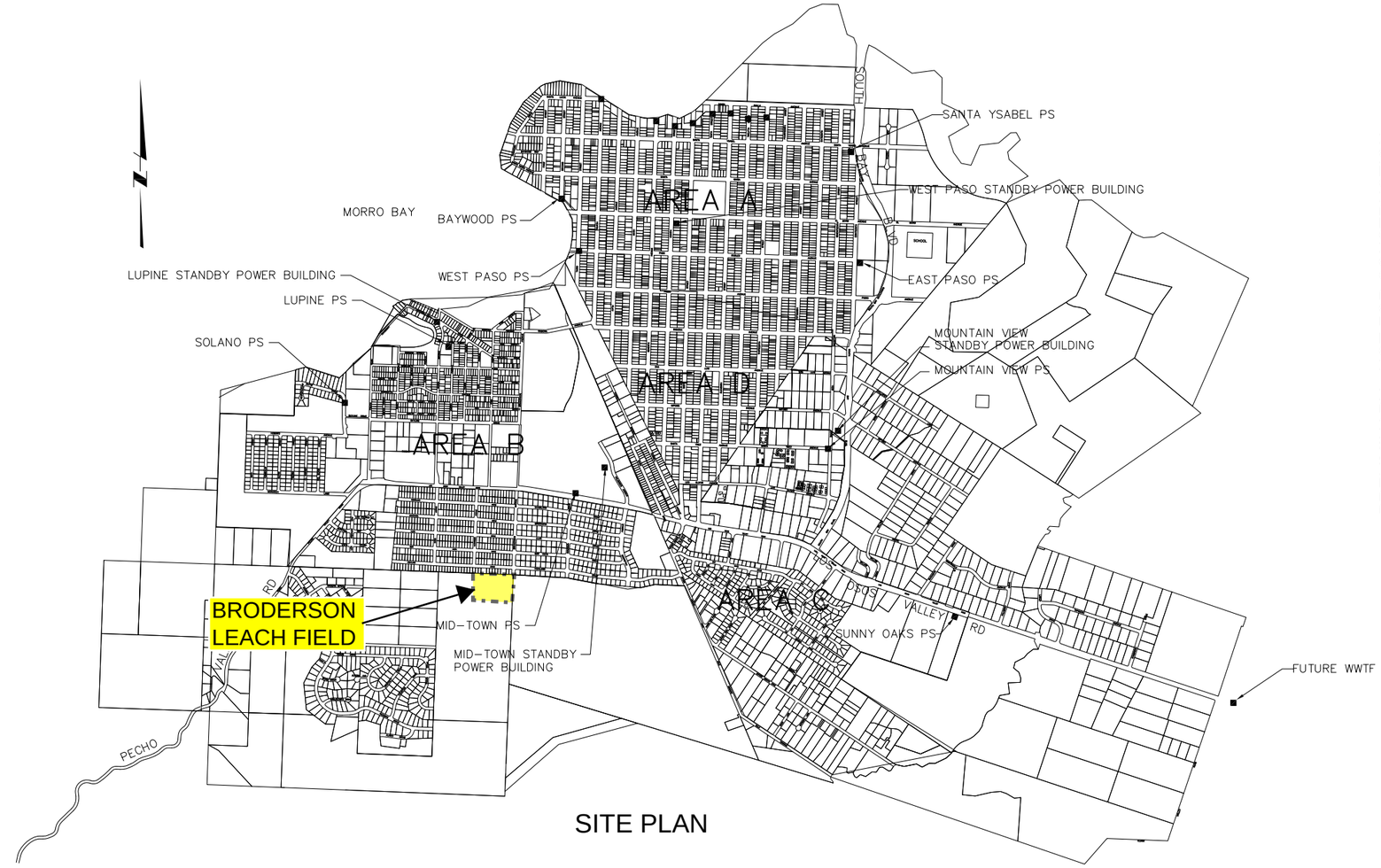

SITE PLAN

SHEET INDEX

SWPPP-000 TITLE SHEET
SWPPP-001 VICINITY MAP
SWPPP-002 GENERAL NOTES
SWPPP-003 GENERAL NOTES
SWPPP-004 DETAIL SHEET
SWPPP-005 DETAIL SHEET
SWPPP-006 DETAIL SHEET
SWPPP-007 BRODERSON LEACH FIELD

consultant:
groundup Design & Construction Management
Robert W. Carnes
Registered Construction Inspector RC #5291
CPESC #5454 QSD/P #00161
p.o. box 1383, paso robles, ca 93447
ph & fax 805-227-4159
cell: 440-9988
email: rwcarnes@earthlink.net
CERTIFIED PROFESSIONAL IN EROSION AND SEDIMENT CONTROL CPESC®

PRELIMINARY - NOT FOR CONSTRUCTION

REV. NO.	DATE	DRWN	CHKD	REMARKS

DESIGNED BY: BJC
DRAWN BY: WKT
CHECKED BY: MDM
DATE: JANUARY 2012

0 1/2 1
IF THIS BAR DOES NOT MEASURE 1" THEN ADJUST SCALE ACCORDINGLY

DIGALERT
DIAL TOLL FREE 1-800-642-2444 AT LEAST TWO DAYS BEFORE YOU DIG
UNDERGROUND SERVICE ALERT OF NORTHERN CALIFORNIA

LOS OSOS WASTEWATER COLLECTION SYSTEM

VICINITY MAP

SHEET NO. SWPPP-001

S:\Los Osos\Walnut Creek\G (general All Area's)\ A-G-002 01/15/12 13:05 bullockll XREFS: LosOsos-bdr, CA-BJC, LOC_MDL_KEYPLAN, vicinity, boundry

GENERAL EROSION CONTROL NOTES:

1. PROHIBITION OF MOST NON-STORM WATER DISCHARGES

ONLY STORM WATER FROM THE PROJECT SITE SHALL BE ALLOWED TO FLOW INTO THE PUBLIC STREET SYSTEM. CLEAN, NON-CHLORINATED WATER FROM THE FLUSHING OF FIRE HYDRANTS, WATER MAINS, AND STORM DRAINS MAY BE DISCHARGED TO THE STREET IF IT IS NOT ALLOWED TO COLLECT DIRT, DEBRIS AND TRASH WHILE FLOWING TO THE STREET.

2. SOURCES OF STORM WATER POLLUTANTS

STORM WATER POLLUTANTS INCLUDE SOIL SEDIMENT AND NUTRIENTS, OIL, GREASE, TOXIC POLLUTANTS, HEAVY METALS, PAINT, AND BUILDING MATERIALS. SOURCES OF STORM WATER POLLUTANTS INCLUDE SOIL EROSION BY WATER AND/OR WIND; CLEARING OF VEGETATION; GRADING; VEHICLE AND EQUIPMENT REFUELING AND MAINTENANCE; WASHING OF CONCRETE TRUCKS, MIXERS AND HANDLING REQUIREMENT; PAINTS. SOLVENTS, ADHESIVES; LANDSCAPING WORK; ROOFING AND BUILDING MATERIALS; AND PETROLEUM PRODUCTS.

3. EROSION AND SEDIMENT CONTROLS

A. COVER EXPOSED STOCKPILES OF SOILS, CONSTRUCTION MATERIALS, AND LANDSCAPING MATERIALS WITH HEAVY PLASTIC SHEETING OR NON-WOVEN GEOTEXTILES AND STABILIZE IN PLACE WITH SAND BAG AND ROPE OR OTHER MEANS.

B. IN LANDSCAPING AREAS WHERE THE VEGETATION HAS NOT ESTABLISHED GROWTH AND TAKEN HOLD, CONSTRUCT SANDBAG OR DIRT BERM'S OR SILT FENCES AROUND THEIR PERIMETER TO INSURE THAT WATER WILL BE CONTAINED INSIDE THE LANDSCAPING AREA AND THAT IT WILL NOT BE CONVEYED TO A STORM DRAIN INLET.

C. RE-VEGETATE AREAS WHERE LANDSCAPING HAS DIED OR NOT TAKEN HOLD.

D. DIVERT STORM WATER RUNOFF AROUND DISTURBED SOILS WITH BERM'S, DIRT SWALES GRAVEL BAG BARRIERS.

4. OTHER CONTROLS

A. WASTE DISPOSAL

1. KEEP SOLID WASTE DISPOSAL CONTAINERS COVERED TO PREVENT ENTRY OF STORM WATER AND DEBRIS FROM BEING BLOWN FROM CONTAINERS. CONTAINERS WILL BE WATER TIGHT.

2. PROVIDE FOR THE WEEKLY (OR MORE FREQUENT, AS NECESSARY) DISPOSAL OF WASTE CONTAINERS.

3. PROVIDE CONTAINERS AT CONVENIENT LOCATIONS AROUND THE SITE.

B. SWEEPING OF SITE

1. PROVIDE WEEKLY (OR MORE FREQUENT, AS NECESSARY) SWEEPING BY HAND OR MECHANICAL MEANS TO KEEP THE PAVED AREAS OF THE SITE FREE OF DUST, DIRT, AND DEBRIS.

2. DISPOSE OF ACCUMULATED SWEEPING IN WASTE CONTAINERS, OR HAUL IT OFF THE SITE TO A LANDFILL.

C. SANITARY SEPTIC DISPOSAL

1. PORTABLE TOILETS AND OTHER SANITARY FACILITIES SHALL BE SERVICED WEEKLY (OR MORE FREQUENT, AS NECESSARY) AND PUMPED CLEAN BY A WASTE DISPOSAL COMPANY. NO TOXIC OR HAZARDOUS WASTES SHALL BE DISPOSED OF IN A PORTABLE TOILET OR IN THE ON-SITE SANITARY SEWER. PORTABLE TOILETS SHALL BE PROVIDED IN CONTAINMENT FOR SPILL PREVENTION.

D. SPILLS

1. STORE ADEQUATE ABSORBENT MATERIAL, RAGS, BROOMS, SHOVELS, AND WASTE CONTAINERS ON THE SITE TO CLEAN-UP SPILLS OR MATERIALS SUCH AS FUEL, PAINT SOLVENTS, OR CLEANERS. CLEAN UP MINOR SPILLS IMMEDIATELY.

2. FOR REPORTABLE QUANTITIES OF A HAZARDOUS OR TOXIC SUBSTANCES, SECURE THE SERVICES OF QUALIFIED PERSONNEL FOR CLEAN-UP AND DISPOSAL.

E. CONTROL OF ALLOWABLE NON-STORM WATER DISCHARGES

LANDSCAPING IRRIGATION, EROSION CONTROL MEASURES, PIPE FLUSHING AND TESTING PAVEMENT WASHING, AND DE-WATERING ARE ALLOWED IF THEY CANNOT FEASIBLY BE ELIMINATED, COMPLY WITH THIS PLAN, DO NOT CAUSE OR CONTRIBUTE TO A VIOLATION OF WATER QUALITY STANDARDS, AND ARE NOT REQUIRED TO BE PERMITTED BY THE LOCAL REGIONAL WATER QUALITY CONTROL BOARD.

F. VEHICLES AND EQUIPMENT

1. FIX LEAKS OF FUEL, OIL, AND OTHER SUBSTANCES IMMEDIATELY.

2. PERFORM REFUELING AND SERVICE OF VEHICLES OR EQUIPMENT OFF-SITE WHEN POSSIBLE. IF REFUELING OR SERVICE OF EQUIPMENT IS PERFORMED ON-SITE, THEN PROVIDE AN IMPERVIOUS, CONTAINED AREA WHERE ANY SPILLS CAN BE CONTAINED WITHOUT FLOWING TO A STORM WATER INLET OR ONTO THE GROUND.

3. USE DRIP PANS TO CATCH LEAKS AND SMALL SPILLS.

G. CONCRETE TRUCKS, MIXERS, AND HAULING EQUIPMENT

1. DISPOSE OF WASHOUT FROM THE WASHING OF CONCRETE TRUCKS AT ASSIGNED WASHOUT AREAS.

2. PROVIDE A HOLDING TANK TO RECEIVE ANY WASHOUT FROM CONCRETE EQUIPMENT. DISPOSAL OF TANK CONTENTS SHOULD BE CONDUCTED BY A WASTE HAULING FIRM.

3. PROVIDE A DESIGNATED AREA FOR WASHING ANY VEHICLES OR EQUIPMENT; DRAINAGE FROM THIS AREA SHOULD FLOW TO THE HOLDING TANK.

H. LANDSCAPING OPERATIONS

1. USE ONLY THE MINIMUM AMOUNT OF LANDSCAPING FERTILIZERS, NUTRIENTS, AND OTHER CHEMICALS THAT ARE NEEDED.

consultant:

groundup Design & Construction Management

Robert W. Carnes
Registered Construction Inspector RCI #5291
CPESC #5454 QSD/P #00161
P.O. Box 1383 Pismo Beach, CA 93447
ph & fax 805-227-4139
cell 440-9868
email: rwcarnes@earthlink.net

CERTIFIED PROFESSIONAL IN EROSION AND SEDIMENT CONTROL CPESC®

LOS OSOS WASTEWATER COLLECTION SYSTEM

SWPPP GENERAL NOTES

SWPPP-002

C:\Documents and Settings\bullockll\Desktop\ Fig-bar 02/17/12 09:21 bullockll

2. DO NO OVER WATER FERTILIZED OR TREATED LANDSCAPE AREAS, MINIMIZE RUNOFF OF IRRIGATION WATER FROM LANDSCAPING.

I. STORM WATER INLETS

KEEP ALL ON-SITE STORM WATER INLETS CLEAN AND FREE OF DIRT, SILT, AND DEBRIS, ETC. IN THE EVENT THAT SEDIMENT AND DEBRIS MAY FLOW TO AN INLET, PROVIDE A 6-INCH (MINIMUM) SANDBAG BERM AROUND THE INLET TO TRAP THE DIRT AND DEBRIS AND ALLOW ONLY CLEAN STORM WATER TO ENTER THE INLET (EROSION CONTROL PLAN).

5. INSPECTION BY CONTRACTOR & ENGINEER OF RECORD

A. REGULAR INTERVAL INSPECTION AND INSPECTION BEFORE AND AFTER STORM

1. VISUALLY INSPECT THE SITE WEEKLY TO INSURE THAT STORM WATER INLETS ARE FREE OF DIRT AND DEBRIS.

2. BEFORE A STORM, INSPECT THE SITE TO INSURE THAT STORM WATER POLLUTION CONTROL MEASURES ARE IN PLACE.

3. AFTER A STORM, INSPECT ALL STORM WATER INLETS TO INSURE THAT THEY ARE CLEAR OF DIRT AND DEBRIS. CLEAN THOSE STORM WATER INLETS THAT ARE NOT CLEAR AND FREE OF DEBRIS.

4. THE REGIONAL WATER BOARD MAY REQUIRE THE DISCHARGER TO CONDUCT ADDITIONAL SITE INSPECTIONS, SUBMIT REPORTS AND CERTIFICATIONS, OR TO PERFORM SAMPLING AND ANALYSIS.

5. THE DISCHARGER (PERMITTEE) IS REQUIRED TO CONDUCT INSPECTION OF THE CONSTRUCTION SITE PRIOR TO ANTICIPATED STORM EVENTS AND AFTER ACTUAL STORM EVENTS TO IDENTIFY AREAS CONTRIBUTING TO A STORM WATER DISCHARGE AND TO EVALUATE WHETHER MEASURES TO REDUCE POLLUTANT LOADINGS IDENTIFIED IN THE SWPPP ARE ADEQUATE AND PROPERLY IMPLEMENTED IN ACCORDANCE WITH THE TERMS OF THE GENERAL PERMIT AND WHETHER ADDITIONAL CONTROL PRACTICES ARE NEEDED.

6. MAINTENANCE OF CONTROLS
A. MAINTENANCE AND REPAIR
ALL CONTROLS AND MEASURES INDICATED ON THIS PLAN SHOULD BE MAINTAINED IN GOOD AND EFFECTIVE CONDITION BY THE CONTRACTOR. IF ANY CONTROL OF MEASURES ARE DAMAGED OR REMOVED, THEY SHOULD BE PROMPTLY REPAIRED OR RESTORED.
B. PLAN REVISIONS
IF CONSTRUCTION ACTIVITY OR CONDITIONS CHANGE FROM THOSE SHOWN IN THIS PLAN THEN THIS PLAN SHOULD BE REVISED TO REFLECT THE CURRENT CONDITIONS.

7. FINAL STABILIZATION AND POST-CONSTRUCTION CONTROLS
A. AFTER CONSTRUCTION HAS BEEN COMPLETED, THE SITE SHALL BE SWEPT CLEAN, STORM WATER INLETS (GRATES AND BASIN) SHALL BE CLEANED, AND ALL WASTE AND LEFTOVER MATERIALS SHALL BE REMOVED FROM THE SITE.
B. ALL LANDSCAPING AND PLANTING AREAS SHOULD BE WELL MAINTAINED TO PREVENT EROSION. AVOID OVER-WATERING OF LANDSCAPING.
C. ALL PAVED AREAS SHOULD BE SWEPT WEEKLY EITHER BY HAND OR BY MECHANICAL MEANS TO KEEP THE SITE CLEAR OF DIRT, DUST, AND DEBRIS.
D. WASTE MATERIALS ON-SITE SHOULD BE STORED IN COVERED CONTAINERS WHICH ARE CLEANED OUT REGULARLY.
E. TESTING OF FIRE HYDRANTS ON-SITE SHALL NOT BE CONDUCTED UNTIL THE AREA WHERE THE WATER DISCHARGES HAS BEEN SWEPT CLEAN OF DIRT AND DEBRIS.
F. STORM DRAIN LINES SHOULD BE CHECKED AND CLEANED ANNUALLY TO KEEP THEM CLEAN AND CLEAR OF DEBRIS.
G. ALL ON-SITE STORM WATER INLETS SHOULD BE CLEARLY MARKED WITH 4" BLUE LETTERS ON WHITE FIELD "STORM WATER ONLY, THIS DRAINS TO THE OCEAN".

8. ALL CONSTRUCTION ACTIVITIES INCLUDING GRADING, VEGETATION REMOVAL, STOCKPILING, EQUIPMENT STORAGE ETC. SHALL REMAIN OUTSIDE OF THE 20-FOOT CREEK SETBACK LINE AT ALL TIMES UNLESS AN EXCEPTION FOR SUCH CONSTRUCTION HAS BEEN APPROVED BY THE COMMUNITY DEVELOPMENT DEPARTMENT. THE CREEK SETBACK LINE SHALL BE ESTABLISHED BY THE CITY'S NATURAL RESOURCE MANAGER AND MARKED IN THE FIELD. THE SETBACK AREA SHALL BE FENCED WITH ORANGE CONSTRUCTION FENCING, AND SHALL BE IN PLACE PRIOR TO THE BEGINNING OF CONSTRUCTION AND THROUGHOUT THE DURATION OF CONSTRUCTION.

SWPPP PLAN NOTES:

1. ALL EROSION CONTROL NOTES ON SWPPP SHEETS SHALL APPLY TO THIS PLAN.
2. ALL PERIMETER PROTECTIONS I.E. SILT FENCING AND FIBER ROLLS ARE CONSIDERED PHASE ONE CONTROLS AND SHALL BE INSTALLED PRIOR TO THE BEGINNING OF WORK ON THE SITE AS PRACTICABLE.
3. GRAVEL BAGS AND FIBER ROLLS IN GRADED AREAS SHALL BE INSTALLED AS PRACTICABLE AND IN CONFORMANCE WITH RAIN CONDITIONS.
4. HYDROSEED, MULCH AND WIND PROTECTION MEASURES SHALL BE APPLIED IF AREAS ARE NOT TO RECEIVE FURTHER WORK WITH IN 14 DAYS.
5. HYDROMULTCH SHALL BE APPLIED AFTER ALL GRADING WORK IS PERFORMED AND DEEMED COMPLETE. FIBER ROLLS MAY REMAIN IN PLACE AFTER WORK COMPLETION.
6. FOR RESPONSIBLE CHARGE OF EROSION CONTROL DEVICES SEE SWPPP BOOK SECTION 6.1.
7. ALL DETAILS FOR EROSION DEVICES ARE SHOWN ON DETAIL SHEETS AND IN APPENDIX H.
8. HYDROMULCH, HYDROSEED AND OR WIND EROSION PREVENTION MEASURES PER BMP'S EC-3, 4 , 6 OR WE-1 SHALL BE PUT IN PLACE AS SOON AS PRACTICABLE.
9. SAMPLING POINT ARE AS SHOWN ON PUMP STATION PLANS AND SHALL BE DETERMINED IN THE FIELD ON THE LINEAR CONSTRUCTION AT APPROPRIATE LOCATIONS.
10. DETENTION RETENSION FACILITIES ARE TO BE CLEANED OF DEBRIS AND SOIL AS NECESSARY AND PRACTICABLE.

consultant:
ground up Design & Construction Management
Robert W. Carnes
Registered Construction Inspector RC #5291
CPESC #5454 QSD/P #00161
p.o. box 1583, paso robles, ca 93447
ph. & fax 805-227-4159
cell: 440-9885
email: rwcarnes@earthlink.net
CERTIFIED PROFESSIONAL IN EROSION AND SEDIMENT CONTROL CPESC®

LOS OSOS WASTEWATER COLLECTION SYSTEM

SWPPP GENERAL NOTES

SWPPP-003

C:\Documents and Settings\bullockll\Desktop\ Fig-bdr 02/17/12 09:21 bullockll

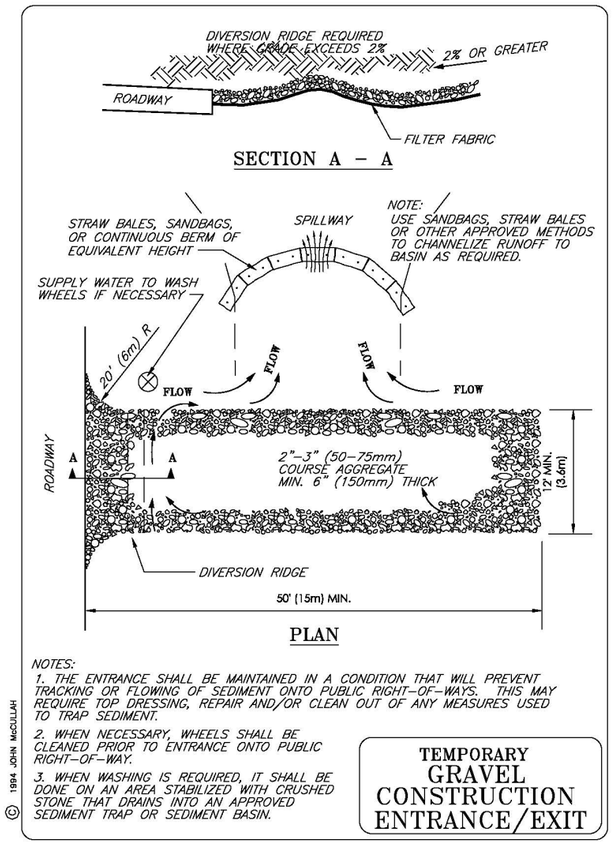

TC-1 STABILIZED CONSTRUCTION ENTRANCE

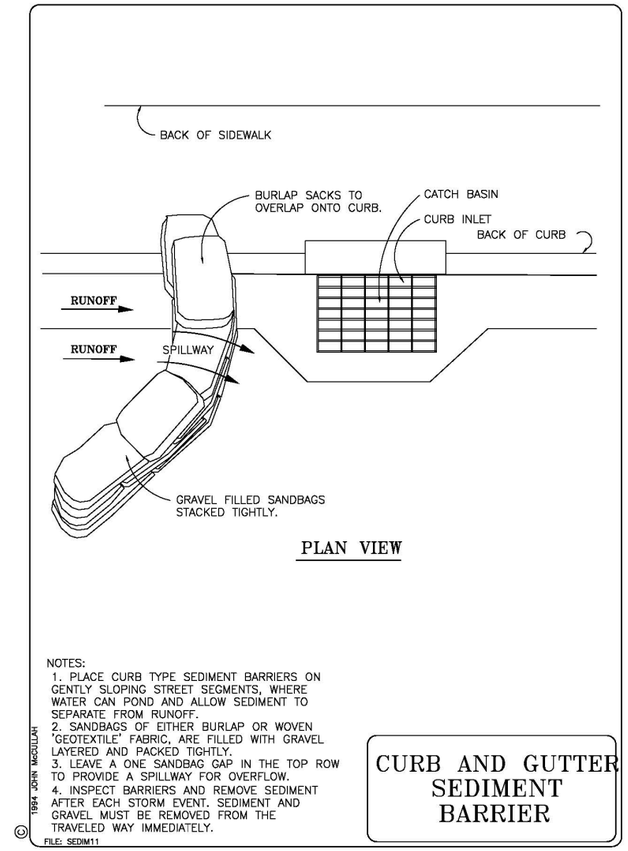

SE-10 STORM DRAIN INLET PROTECTION

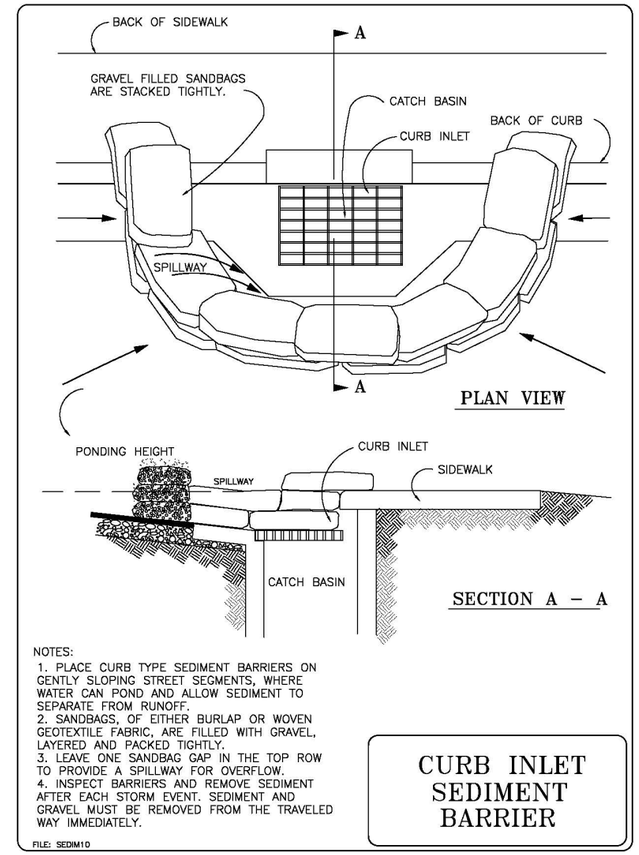

SE-10 STORM DRAIN INLET PROTECTION

FOR ADDITIONAL BMP DETAILS AND INFORMATION SEE SWPPP APPENDIX H.

consultant:

ground up Design & Construction Management
Robert W. Carnes
Registered Construction Inspector RC #5291
CPESC #5454 QSD/P #00161
P.O. Box 1383, Pismo Beach, CA 93447
ph & fax 805-227-4139
cell 440-9888
email: rwcarnes@earthlink.net
CERTIFIED PROFESSIONAL IN EROSION AND SEDIMENT CONTROL CPESC®

LOS OSOS WASTEWATER COLLECTION SYSTEM

–
–

SWPPP DETAILS

SWPPP-004

C:\Documents and Settings\bullockll\Desktop\ Fig-bdr 02/17/12 09:21 bullockll

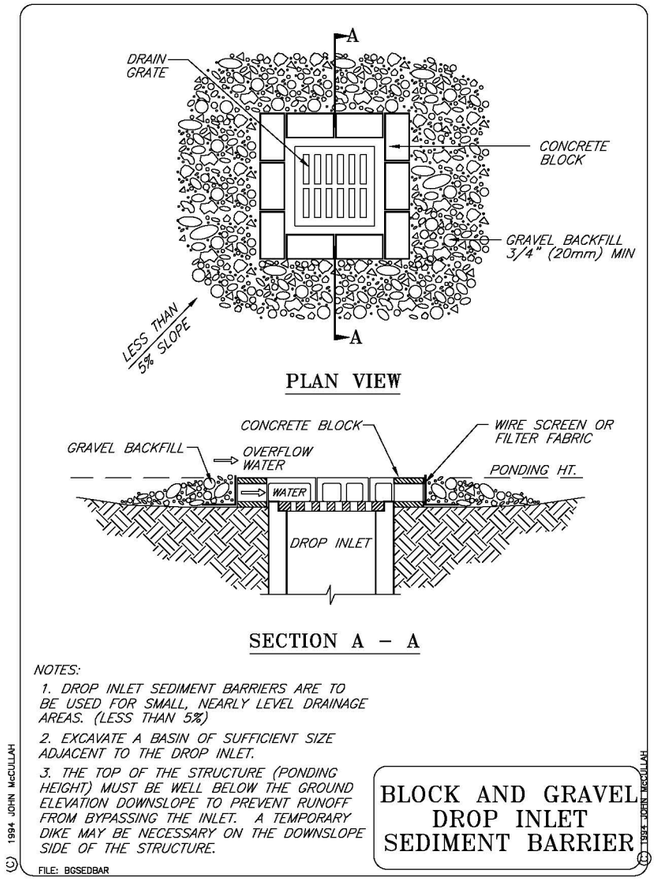

SE-10 STORM DRAIN INLET PROTECTION

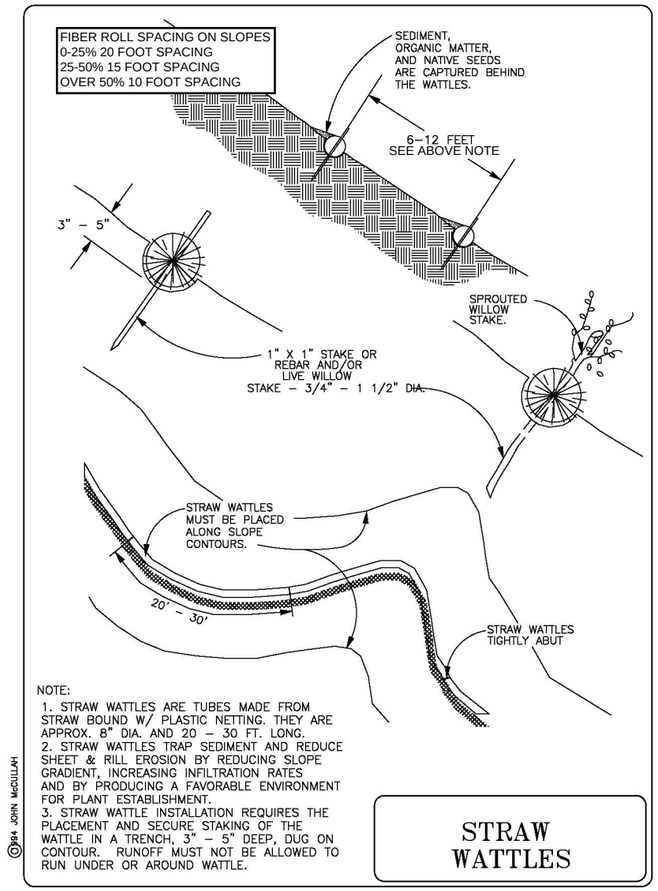

SE-5 FIBER ROLL INSTALLATION

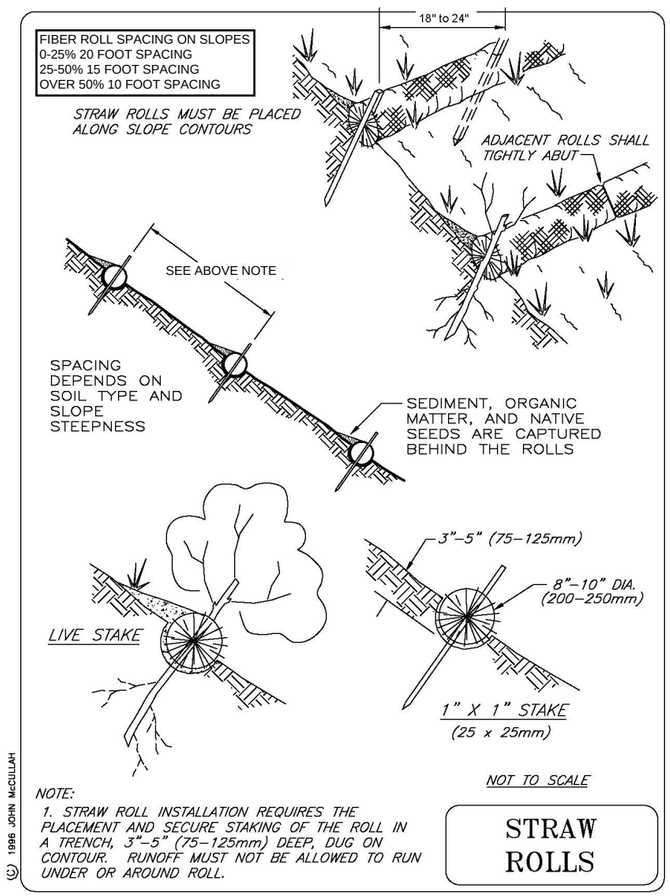

SE-5 FIBER ROLL INSTALLATION

FOR ADDITIONAL BMP DETAILS AND INFORMATION SEE SWPPP APPENDIX H.

consultant:

ground UP Design & Construction Management
Robert W. Carnes
Registered Construction Inspector RC #5291
CPESC #5454 QSD/P #00161
p.o. box 1383 paso robles, ca 93447
ph & fax 805-227-4159
cell 440-9868
email: rwcarnes@earthlink.net

CERTIFIED PROFESSIONAL IN EROSION AND SEDIMENT CONTROL CPESC®

LOS OSOS WASTEWATER COLLECTION SYSTEM

SWPPP DETAILS

SWPPP-005

C:\Documents and Settings\bullockll\Desktop\ Fig-bdr 02/17/12 09:21 bullockll

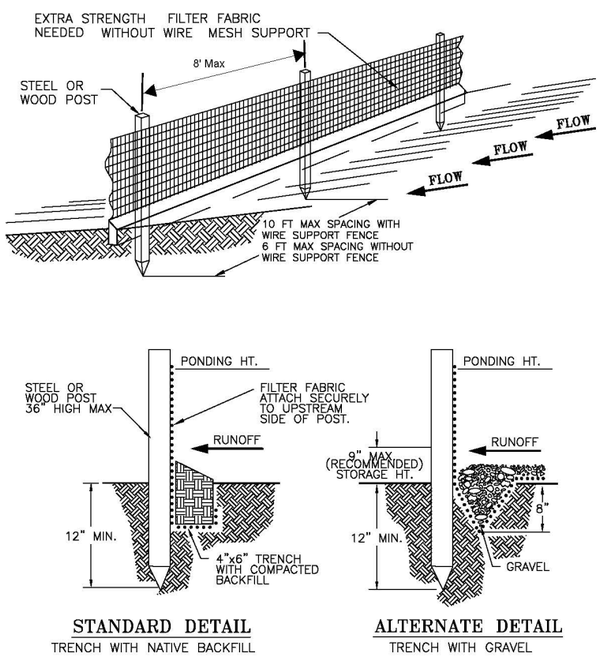

NOTE:
1. INSPECT AND REPAIR FENCE AFTER EACH STORM EVENT AND REMOVE SEDIMENT WHEN NECESSARY.
2. REMOVED SEDIMENT SHALL BE DEPOSITED TO AN AREA THAT WILL NOT CONTRIBUTE SEDIMENT OFF-SITE AND CAN BE PERMANENTLY STABILIZED.
3. SILT FENCE SHALL BE PLACED ON SLOPE CONTOURS TO MAXIMIZE PONDING EFFICIENCY.

©94 JOHN McCULLAH

SILT FENCE

SE-1 SILT FENCE INSTALLATION

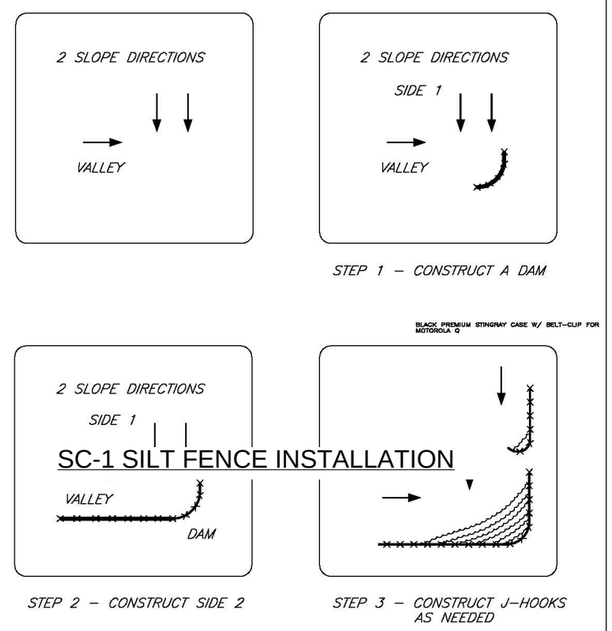

SC-1 SILT FENCE INSTALLATION

INSTALLATION WITH J-HOOKS WILL INCREASE SILT FENCE EFFICIENCY AND REDUCE EROSION-CAUSING FAILURES.

© 2001 JOHN McCULLAH

SILT FENCE
TYPICAL PLACEMENT-TWO SLOPES

SE-1 & SE-5 SILT FENCE & FIBER ROLL SLOPE PLACMENT

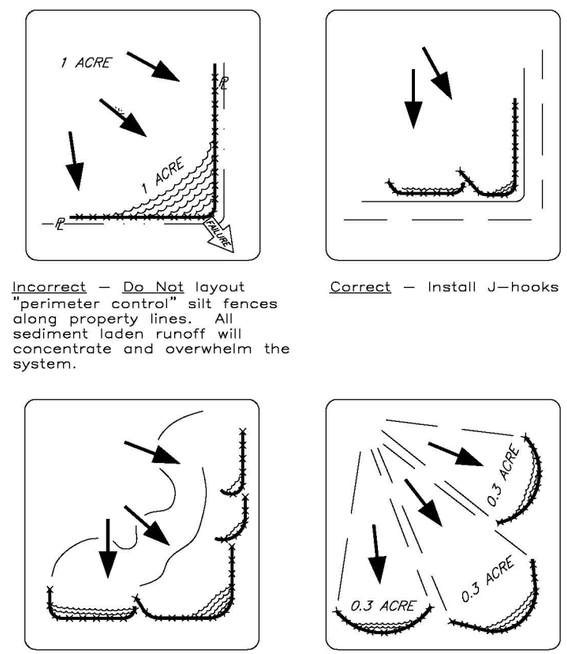

Incorrect – Do Not layout "perimeter control" silt fences along property lines. All sediment laden runoff will concentrate and overwhelm the system.

Correct – Install J-hooks

Discreet segments of silt fence, installed with J-hooks or 'smiles' will be much more effective.

© 2001 JOHN McCULLAH

FILE: SF-PERIMETER CONTROL

SILT FENCE PLACEMENT
FOR PERIMETER CONTROL

SE-1 & SE-5 SILT FENCE & FIBER ROLL SLOPE PLACMENT

FOR ADDITIONAL BMP DETAILS AND INFORMATION SEE SWPPP APPENDIX H.

consultant:
ground up Design & Construction Management
Robert W. Carnes
Registered Construction Inspector RC #5291
CPESC #5454 QSD/P #00161
p.o. box 1383, paso robles, ca 93447
ph & fax 805-227-4159
cell 440-9868
email: rwcarnes@earthlink.net

CERTIFIED PROFESSIONAL IN EROSION AND SEDIMENT CONTROL CPESC®

LOS OSOS WASTEWATER COLLECTION SYSTEM

SWPPP DETAILS

SWPPP-006

C:\Documents and Settings\bullockll\Desktop\ Fig-bdr 02/17/12 09:21 bullockll

LEGEND

- TC-1 STABILIZED CONSTRUCTION ENTRANCE
- SE-1 SILT FENCE
- SE-5 FIBER ROLL
- SE-6 GRAVEL BAG BARRIERS
- SE-7 STREET SWEEPING AND VACCUMING
- EC-3 / 6 HYDRAULIC MULCH, STRAW AND/OR WE-1 WIND EROSION PREVENTION
- EC-7 LONG TERM EROSION CONTROL BLANKET
- WM-8 CONCRETE WASH OUT
- SAMPLING POINT
- RUN ON SAMPLING POINT
- SC-5 FIBER ROLL INSIDE A SC-1 SILT FENCE TYPICAL ALONG THE TOE OF SLOPE WITH NO MORE THAN 4 VERTICAL FEET UP STREAM.
- DIRECTION OF FLOW

SWPPP PLAN NOTES:

1. ALL EROSION CONTROL NOTES ON SWPPP SHEETS SHALL APPLY TO THIS PLAN.
2. ALL PERIMETER PROTECTIONS I.E. SILT FENCING AND FIBER ROLLS ARE CONSIDERED PHASE ONE CONTROLS AND SHALL BE INSTALLED PRIOR TO THE BEGINNING OF WORK ON THE SITE AS PRACTICABLE.
3. GRAVEL BAGS AND FIBER ROLLS IN GRADED AREAS SHALL BE INSTALLED AS PRACTICABLE AND IN CONFORMANCE WITH RAIN CONDITIONS.
4. HYDROSEED, MULCH AND WIND PROTECTION MEASURES SHALL BE APPLIED IF AREAS ARE NOT TO RECEIVE FURTHER WORK WITH IN 14 DAYS.
5. HYDROMULTCH SHALL BE APPLIED AFTER ALL GRADING WORK IS PERFORMED AND DEEMED COMPLETE. FIBER ROLLS MAY REMAIN IN PLACE AFTER WORK COMPLETION.
6. FOR RESPONSIBLE CHARGE OF EROSION CONTROL DEVICES SEE SWPPP BOOK SECTION 6.1.
7. ALL DETAILS FOR EROSION DEVICES ARE SHOWN ON DETAIL SHEETS AND IN APPENDIX H.
8. HYDROMULCH, HYDROSEED AND OR WIND EROSION PREVENTION MEASURES PER BMP'S EC-3, 4 , 6 OR WE-1 SHALL BE PUT IN PLACE AS SOON AS PRACTICABLE.
9. SAMPLING POINT ARE AS SHOWN ON PUMP STATION PLANS AND SHALL BE DETERMINED IN THE FIELD ON THE LINEAR CONSTRUCTION AT APPROPRIATE LOCATIONS.
10. DETENTION RETENSION FACILITIES ARE TO BE CLEANED OF DEBRIS AND SOIL AS NECESSARY AND PRACTICABLE.
11. IN THE EVENT THAT THE PERMIT PERIOD WILL EXPIRE PRIOR TO THE ESTABLISHMENT OF REVEGITATION TO 70% AS REQUIRED TO OBTAIN A NOTICE OF TERMINATION FROM THE RWQCB THE CONTRACTOR SHALL INSTALL COCO MATS TO QUALIFY FOR THE NOT.

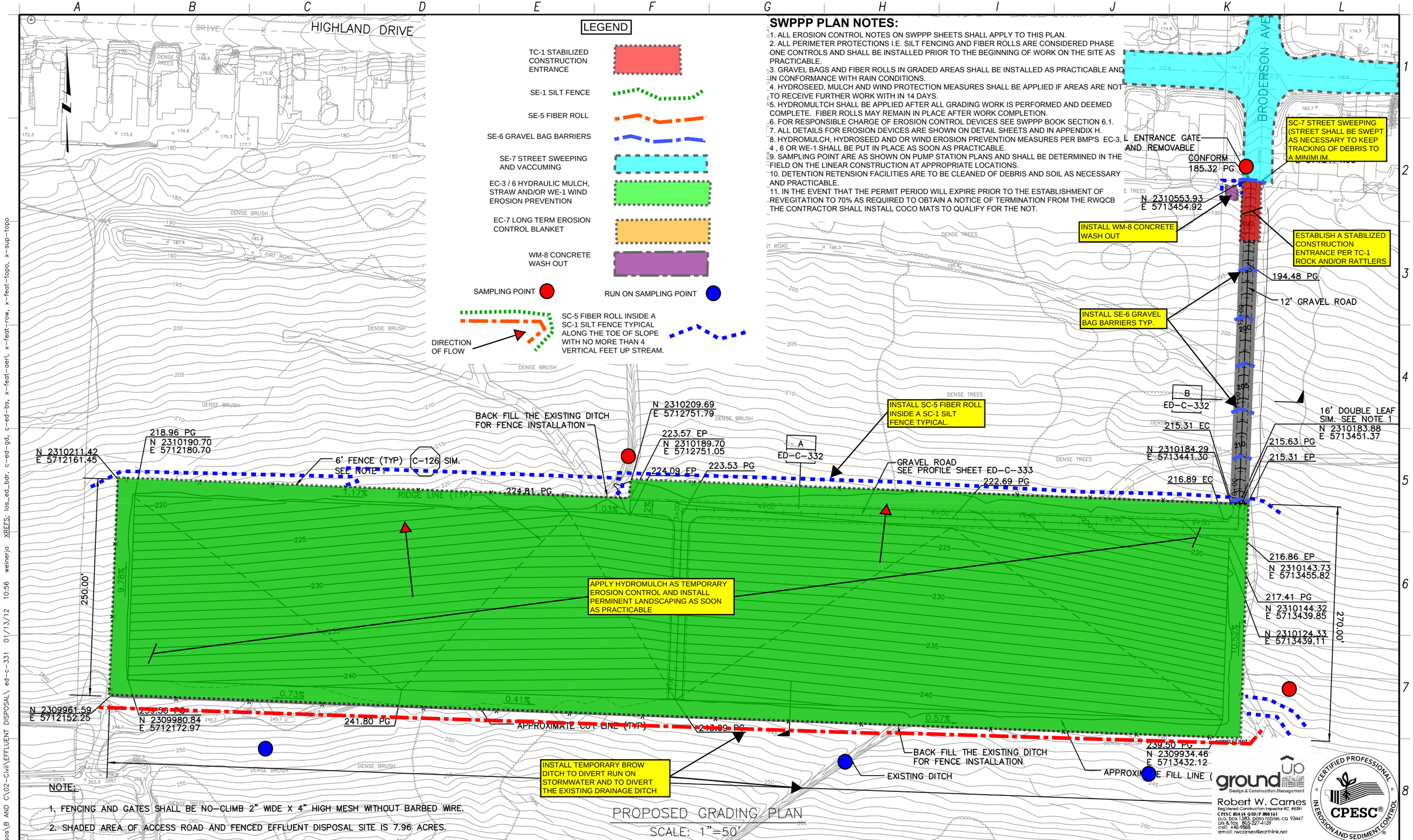

NOTE:

1. FENCING AND GATES SHALL BE NO-CLIMB 2" WIDE X 4" HIGH MESH WITHOUT BARBED WIRE.
2. SHADED AREA OF ACCESS ROAD AND FENCED EFFLUENT DISPOSAL SITE IS 7.96 ACRES.

PROPOSED GRADING PLAN
SCALE: 1"=50'

ground up Design & Construction Management
Robert W. Carnes
Registered Construction Inspector RC #5291
CPESC #5454 QSD/P #00161
P.O. Box 1383, paso robles, ca 93447
ph & fax 805-227-4159
cell 440-9868
email: rwcarnes@earthlink.net
CERTIFIED PROFESSIONAL IN EROSION AND SEDIMENT CONTROL CPESC®

REV. NO.	DATE	DRWN	CHKD	REMARKS

0 1/2 1
IF THIS BAR DOES NOT MEASURE 1" THEN ADJUST SCALE ACCORDINGLY

DIGALERT
DIAL TOLL FREE 1-800-642-2444
AT LEAST TWO DAYS BEFORE YOU DIG
UNDERGROUND SERVICE ALERT OF NORTHERN CALIFORNIA

LOS OSOS WASTEWATER COLLECTION SYSTEM

BRODERSON LEACH FIELD SWPPP

SHEET NO.
SWPPP-007

N:\ACAD2008\los osos\B AND C\02-Civil\EFFLUENT DISPOSAL\ ed-c-331 01/13/12 10:56 weinerja XREFS: los_ed_bdr, c-ed-gd, c-ed-bs, x-feat-aerl, x-feat-row, x-feat-topo, x-sup-topo

Appendix C: Permit Registration Documents

Permit Registration Documents included in this Appendix

Y/N	Permit Registration Document
	Notice of Intent
	Risk Assessment
	Certification
	Post Construction Water Balance
	Copy of Annual Fee Receipt
	ATS Design Documents
	Site Map, see Appendix B

SWPPP Amendment No.

_____

Project Name: _____

Project Number: _____

Qualified SWPPP Developer's Certification of the

Stormwater Pollution Prevention Plan Amendment

"This Stormwater Pollution Prevention Plan and attachments were prepared under my direction to meet the requirements of the California Construction General Permit (SWRCB Order No. 2009-009-DWQ as amended by 2010-0014-DWQ). I certify that I am a Qualified SWPPP Developer in good standing as of the date signed below."

QSD's Signature	Date
QSD Name	QSD Certificate Number
Title and Affiliation	Telephone
Address	Email

Appendix E: Submitted Changes to PRDs

Log of Updated PRDs

The General Permit allows for the reduction or increase of the total acreage covered under the General Permit when a portion of the project is complete and/or conditions for termination of coverage have been met; when ownership of a portion of the project is purchased by a different entity; or when new acreage is added to the project.

Modified PRDs shall be filed electronically within 30 days of a reduction or increase in total disturbed area if a change in permit covered acreage is to be sought. The SWPPP shall be modified appropriately, with revisions and amendments recorded in Appendix C. Updated PRDs submitted electronically via SMARTS can be found in this Appendix.

This appendix includes all of the following updated PRDs (check all that apply):

☐ Revised Notice of Intent (NOI);

☐ Revised Site Map;

☐ Revised Risk Assessment;

☐ New landowner's information (name, address, phone number, email address); and

☐ New signed certification statement.

Legally Responsible Person [if organization]	
Signature of [Authorized Representative of] Legally Responsible Person or Approved Signatory	Date
Name of [Authorized Representative of] Legally Responsible Person or Approved Signatory	Telephone Number

Appendix F: Construction Schedule

TO BE PREPARED BY THE CONTRACTOR AND PROVIDED AS AN ADENDUME TO THE SWPPP.

CONTRACTOR TO PREPARE A LIST AS PER THE BELOW INSTRUCTIONS AND PROVIDE THEM AS AN ADENDUME TO THE SWPPP.

Table G.a POLLUTANTS ASSOCIATED WITH CONSTRUCTION ACTIVITIES

General Work Activity/ Products With Potential Stormwater Pollutants	Specific Work Activity/Products With Potential Stormwater Pollutants	Pollutant Categories
Adhesives	• Adhesives, glues, resins, epoxy synthetics, PVC cement • Caulks, sealers, putty, sealing agents and • Coal tars (naphtha, pitch)	Oil and Grease, Synthetic Organics[1]
Asphalt paving/curbs	• Hot and cold mix asphalt	Oil and Grease
Cleaners	• Polishes (metal, ceramic, tile) • Etching agents • Cleaners, ammonia, lye, caustic sodas, bleaching agents and chromate salts	Metals, Synthetic Organics
Concrete / Masonry	• Cement and brick dust • Colored chalks • Concrete curing compounds • Glazing compounds • Surfaces cleaners • Saw cut slurries • Tile cutting	Metals, Synthetic Organics
Drywall	• Saw-cutting drywall	Metals
Framing/Carpentry	• Sawdust, particle board dust, and treated woods • Saw cut slurries	Metals, Synthetic Organics
Heating, Ventilation, Air Conditioning	• Demolition or construction of air condition and heating systems	Metals, Synthetic Organics
Insulation	• Demolition or construction involving insulation, venting systems	Metals, Synthetic Organics
Liquid waste	• Wash waters • Irrigation line testing/flushing	Metals, Synthetic Organics
Painting	• Paint thinners, acetone, methyl ethyl ketone, stripper paints, lacquers, varnish, enamels, turpentine, gum spirit, solvents, dyes, stripping pigments and sanding	Metals, Synthetic Organics
Planting / Vegetation Management	• Vegetation control (pesticides/herbicides) • Planting • Plant maintenance • Vegetation removal	Nutrients, Metals, Synthetic Organics
Plumbing	• Solder (lead, tin), flux (zinc chloride), pipe fitting • Galvanized metal in nails, fences, and electric wiring	Metals, Synthetic Organics
Pools/fountains	• Chlorinated water	Synthetic Organics

CONTRACTOR TO PREPARE A LIST AS PER THE BELOW INSTRUCTIONS AND PROVIDE THEM AS AN ADENDUME TO THE SWPPP.

Table G.a POLLUTANTS ASSOCIATED WITH CONSTRUCTION ACTIVITIES

General Work Activity/ Products With Potential Stormwater Pollutants	**Specific Work Activity/Products With Potential Stormwater Pollutants**	**Pollutant Categories**
Removal of existing structures	• Demolition of asphalt, concrete, masonry, framing, roofing, metal structures.	Metals, Oil and Grease, Synthetic Organics
Roofing	• Flashing • Saw cut slurries (tile cutting) • Shingle scrap and debris	Metals, Oil and Grease, Synthetic Organics
Sanitary waste	• Portable toilets • Disturbance of existing sewer lines.	Nutrients
Soil preparation/amendments	• Use of soil additives/amendments	Nutrients
Solid waste	• Litter, trash and debris • Vegetation	Gross Pollutants
Utility line testing and flushing	• Hydrostatic test water • Pipe flushing	Synthetic Organics
Vehicle and equipment use	• Equipment operation • Equipment maintenance • Equipment washing • Equipment fueling	Oil and Grease
[1] Synthetic Organics are defined in Table 1.2 of the CASQA *Stormwater BMP Handbook Portal: Construction* as adhesives, cleaners, sealants, solvents, etc. These are generally categorized as VOCs or SVOCs.		

Table G.1 Construction Activities and Associated Pollutants

Phase	Activity	Associated Materials or Pollutants	Pollutant Category[1]
Grading and Land Development			
Streets and Utilities Phase			
Vertical Construction Phase			
Landscaping and Site Stabilization Phase			

[1] Categories per CASQA BMP Handbook (i.e., Sediment, Nutrients, Bacteria and Viruses, Oil and Grease, Metals, Synthetic Organics, Pesticides, Gross Pollutants, and Vector Production)

Appendix H: CASQA Stormwater BMP Handbook Portal: Construction Fact Sheets.

CASQA BMPS ARE INCLUDED IN THE LOWWCS LUP TYPE 2 SWPPP.

Appendix I: BMP Inspection Form

BMP INSPECTION REPORT

Date and Time of Inspection:		Date Report Written:		
Inspection Type: (Circle one)	Weekly *Complete Parts I,II,III and VII*	Pre-Storm *Complete Parts I,II,III,IV and VII*	During Rain Event *Complete Parts I, II, III, V, and VII*	Post-Storm *Complete Parts I,II,III,VI and VII*

Part I. General Information

Site Information

Construction Site Name:			
Construction stage and completed activities:			Approximate area of site that is exposed:
Photos Taken: (Circle one)	Yes	No	Photo Reference IDs:

Weather

Estimate storm beginning: (date and time)	Estimate storm duration: (hours)
Estimate time since last storm: (days or hours)	Rain gauge reading and location: (in)

Is a "Qualifying Event" predicted or did one occur (i.e., 0.5" rain with 48-hrs or greater between events)? (Y/N)
If yes, summarize forecast:

Exemption Documentation (explanation required if inspection could not be conducted). Visual inspections are not required outside of business hours or during dangerous weather conditions such as flooding or electrical storms.

Inspector Information

Inspector Name:	Inspector Title:
Signature:	Date:

Part II. BMP Observations. Describe deficiencies in Part III.

Minimum BMPs for Risk Level _____ Sites	Failures or other short comings (yes, no, N/A)	Action Required (yes/no)	Action Implemented (Date)
Good Housekeeping for Construction Materials			
Inventory of products (excluding materials designed to be outdoors)			
Stockpiled construction materials not actively in use are covered and bermed			
All chemicals are stored in watertight containers with appropriate secondary containment, or in a completely enclosed storage shed			
Construction materials are minimally exposed to precipitation			
BMPs preventing the off-site tracking of materials are implemented and properly effective			
Good Housekeeping for Waste Management			
Wash/rinse water and materials are prevented from being disposed into the storm drain system			
Portable toilets are contained to prevent discharges of waste			
Sanitation facilities are clean and with no apparent for leaks and spills			
Equipment is in place to cover waste disposal containers at the end of business day and during rain events			
Discharges from waste disposal containers are prevented from discharging to the storm drain system / receiving water			
Stockpiled waste material is securely protected from wind and rain if not actively in use			
Procedures are in place for addressing hazardous and non-hazardous spills			
Appropriate spill response personnel are assigned and trained			
Equipment and materials for cleanup of spills is available onsite			
Washout areas (e.g., concrete) are contained appropriately to prevent discharge or infiltration into the underlying soil			
Good Housekeeping for Vehicle Storage and Maintenance			
Measures are in place to prevent oil, grease, or fuel from leaking into the ground, storm drains, or surface waters			
All equipment or vehicles are fueled, maintained, and stored in a designated area with appropriate BMPs			
Vehicle and equipment leaks are cleaned immediately and disposed of properly			

Part II. BMP Observations Continued. Describe deficiencies in Part III.			
Minimum BMPs for Risk Level _____ Sites	Adequately designed, implemented and effective	Action Required (yes/no)	Action Implemented (Date)

	(yes, no, N/A)		
Good Housekeeping for Landscape Materials			
Stockpiled landscape materials such as mulches and topsoil are contained and covered when not actively in use			
Erodible landscape material has not been applied 2 days before a forecasted rain event or during an event			
Erodible landscape materials are applied at quantities and rates in accordance with manufacturer recommendations			
Bagged erodible landscape materials are stored on pallets and covered			
Good Housekeeping for Air Deposition of Site Materials			
Good housekeeping measures are implemented onsite to control the air deposition of site materials and from site operations			
Non-Stormwater Management			
Non-Stormwater discharges are properly controlled			
Vehicles are washed in a manner to prevent non-stormwater discharges to surface waters or drainage systems			
Streets are cleaned in a manner to prevent unauthorized non-stormwater discharges to surface waters or drainage systems.			
Erosion Controls			
Wind erosion controls are effectively implemented			
Effective soil cover is provided for disturbed areas inactive (i.e., not scheduled to be disturbed for 14 days) as well as finished slopes, open space, utility backfill, and completed lots			
The use of plastic materials is limited in cases when a more sustainable, environmentally friendly alternative exists.			
Sediment Controls			
Perimeter controls are established and effective at controlling erosion and sediment discharges from the site			
Entrances and exits are stabilized to control erosion and sediment discharges from the site			
Sediment basins are properly maintained			
Linear sediment control along toe of slope, face of slope an at grade breaks (Risk Level 2)			
Limit construction activity to and from site to entrances and exits that employ effective controls to prevent offsite tracking (Risk Level 2)			
Ensure all storm, drain inlets and perimeter controls, runoff control BMPs and pollutants controls at entrances and exits are maintained and protected from activities the reduce their effectiveness (Risk Level 2)			
Inspect all immediate access roads daily (Risk Level 2)			
Run-On and Run-Off Controls			
Run-on to the site is effectively managed and directed away			

from all disturbed areas.			
Other			
Are the project SWPPP and BMP plan up to date, available on-site and being properly implemented?			

Part III. Descriptions of BMP Deficiencies

Deficiency	Repairs Implemented: Note - Repairs must begin within 72 hours of identification and, complete repairs as soon as possible.	
	Start Date	**Action**
1.		
2.		
3.		
4.		

Part IV. Additional Pre-Storm Observations. Note the presence or absence of floating and suspended materials, sheen, discoloration, turbidity, odors, and source(s) of pollutants(s).

	Yes, No, N/A
Do stormwater storage and containment areas have adequate freeboard? If no, complete Part III.	
Are drainage areas free of spills, leaks, or uncontrolled pollutant sources? If no, complete Part VII and describe below.	
Notes:	
Are stormwater storage and containment areas free of leaks? If no, complete Parts III and/or VII and describe below.	
Notes:	

Part V. Additional During Storm Observations. **If BMPs cannot be inspected during inclement weather, list the results of visual inspections at all relevant outfalls, discharge points, and downstream locations. Note odors or visible sheen on the surface of discharges. Complete Part VII (Corrective Actions) as needed.**	
Outfall, Discharge Point, or Other Downstream Location	
Location	Description
Location	Description
Location	Description
Location	Description
Location	Description
Location	Description
Location	Description
Location	Description

Part VI. Additional Post-Storm Observations. **Visually observe (inspect) stormwater discharges at all discharge locations within two business days (48 hours) after each qualifying rain event, and observe (inspect) the discharge of stored or contained stormwater that is derived from and discharged subsequent to a qualifying rain event producing precipitation of ½ inch or more at the time of discharge. Complete Part VII (Corrective Actions) as needed.**	
Discharge Location, Storage or Containment Area	**Visual Observation**

Part VII. Additional Corrective Actions Required. **Identify additional corrective actions not included with BMP Deficiencies (Part III) above. Note if SWPPP change is required.**	
Required Actions	**Implementation Date**

Appendix J: Project Specific Rain Event Action Plan Template

Rain Event Action Plan (REAP)

Date of REAP		**WDID Number:**	
Date Rain Predicted to Occur:		**Predicted % chance of rain:**	

Predicted Rain Event Triggered Actions

Below is a list of suggested actions and items to review for this project. Each active Trade should check all material storage areas, stockpiles, waste management areas, vehicle and equipment storage and maintenance, areas of active soil disturbance, and areas of active work to ensure the proper implementation of BMPs. Project-wide BMPs should be checked and cross-referenced to the BMP progress map.

Trade or Activity	Suggested action(s) to perform / item(s) to review prior to rain event
❑ Information & Scheduling	❑ Inform trade supervisors of predicted rain ❑ Check scheduled activities and reschedule as needed ❑ Alert erosion/sediment control provider ❑ Alert sample collection contractor (if applicable) ❑ Schedule staff for extended rain inspections (including weekends & holidays) ❑ Check Erosion and Sediment Control (ESC) material stock ❑ Review BMP progress map ❑ Other:_____ ❑ _____ ❑ _____
❑ Material storage areas	❑ Material under cover or in sheds (ex: treated woods and metals) ❑ Perimeter control around stockpiles ❑ Other:_____ ❑ _____ ❑ _____
❑ Waste management areas	❑ Dumpsters closed ❑ Drain holes plugged ❑ Recycling bins covered ❑ Sanitary stations bermed and protected from tipping ❑ Other:_____ ❑ _____ ❑ _____
❑ Trade operations	❑ Exterior operations shut down for event (e.g., no concrete pours or paving) ❑ Soil treatments (e.g.,: fertilizer) ceased within 24 hours of event ❑ Materials and equipment (ex: tools) properly stored and covered ❑ Waste and debris disposed in covered dumpsters or removed from site ❑ Trenches and excavations protected ❑ Perimeter controls around disturbed areas ❑ Fueling and repair areas covered and bermed ❑ Other:_____ ❑ _____ ❑ _____
❑ Site ESC BMPs	❑ Adequate capacity in sediment basins and traps ❑ Site perimeter controls in place ❑ Catch basin and drop inlet protection in place and cleaned ❑ Temporary erosion controls deployed ❑ Temporary perimeter controls deployed around disturbed areas and stockpiles ❑ Roads swept; site ingress and egress points stabilized ❑ Other:_____ ❑ _____ ❑ _____
❑ Concrete rinse out area	❑ Adequate capacity for rain ❑ Wash-out bins covered ❑ Other:_____ ❑ _____ ❑ _____
❑ Spill and drips	❑ All incident spills and drips, including paint, stucco, fuel, and oil cleaned ❑ Drip pans emptied ❑ Other:_____ ❑ _____ ❑ _____

Continued on next page.

❑ Other / Discussion / Diagrams	❑ _____ ❑ _____ ❑ _____ ❑ _____ ❑ _____ ❑ _____ ❑ _____ ❑ _____ ❑ _____ ❑ _____ ❑ _____ ❑ _____ ❑ _____

Attach a printout of the weather forecast from the NOAA website to the REAP.

I certify under penalty of law that this Rain Event Action Plan (REAP) will be performed in accordance with the General Permit by me or under my direction or supervision in accordance with a system designed to assure that qualified personnel properly gathered and evaluated the information submitted. Based on my inquiry of the persons who manage the system, or those persons directly responsible for gathering the information, the information submitted is, to the best of my knowledge and belief, true, accurate, and complete. I am aware that there are significant penalties for submitting false information, including the possibility of fine and imprisonment for knowing violations.

_____Date: _____
Qualified SWPPP Practitioner (Use ink please)

Appendix K: Training Reporting Form

Trained Contractor Personnel Log

Stormwater Management Training Log and Documentation

Project Name: _____
WDID #: _____

Stormwater Management Topic: (check as appropriate)

☐ Erosion Control ☐ Sediment Control
☐ Wind Erosion Control ☐ Tracking Control
☐ Non-Stormwater Management ☐ Waste Management and Materials Pollution Control
☐ Stormwater Sampling

Specific Training Objective: _____

Location: _____ Date: _____

Instructor:_____ Telephone: _____

Course Length (hours): _____

Attendee Roster (Attach additional forms if necessary)

Name	Company	Phone

As needed, add proof of external training (e.g., course completion certificates, credentials for QSP, QSD).

Appendix L: Responsible Parties

Authorization of Approved Signatories

Project Name: _____

WDID #: _____

Name of Personnel	Project Role	Company	Signature	Date
David Flynn	LRP	County of San Luis Obispo		

_____ _____

LRP's Signature Date

_____ _____

LRP Name and Title Telephone Number

Identification of QSP

Project Name: _____

WDID #: _____

The following are QSPs associated with this project

Name of Personnel[1]	Company	Date

(1) If additional QSPs are required on the job site add additional lines and include information here

Authorization of Data Submitters

Project Name: _____

WDID #: _____

Name of Personnel	Project Role	Company	Signature	Date
Robert W. Carnes	QSD# 00161	Ground Up Design & CM, Inc.		

_____ _____

Approved Signatory's Signature Date

_____ _____

Approved Signatory Name and Title Telephone Number

Appendix M:Contractors and Subcontractors

CONTRACTOR SHALL NOTIFY ALL SUBCONTRACTORS AND SUPPLIERS OF SWPPP REQUIREMENTS AND PROVIDE A LOG OF NOTIFICATION:

Appendix N: Construction General Permit

THE CONSTRUCTION GENERAL PERMIT IS AVAILABLE ON THE WEB AT:
http://www.swrcb.ca.gov/water_issues/programs/stormwater/constpermits.shtml