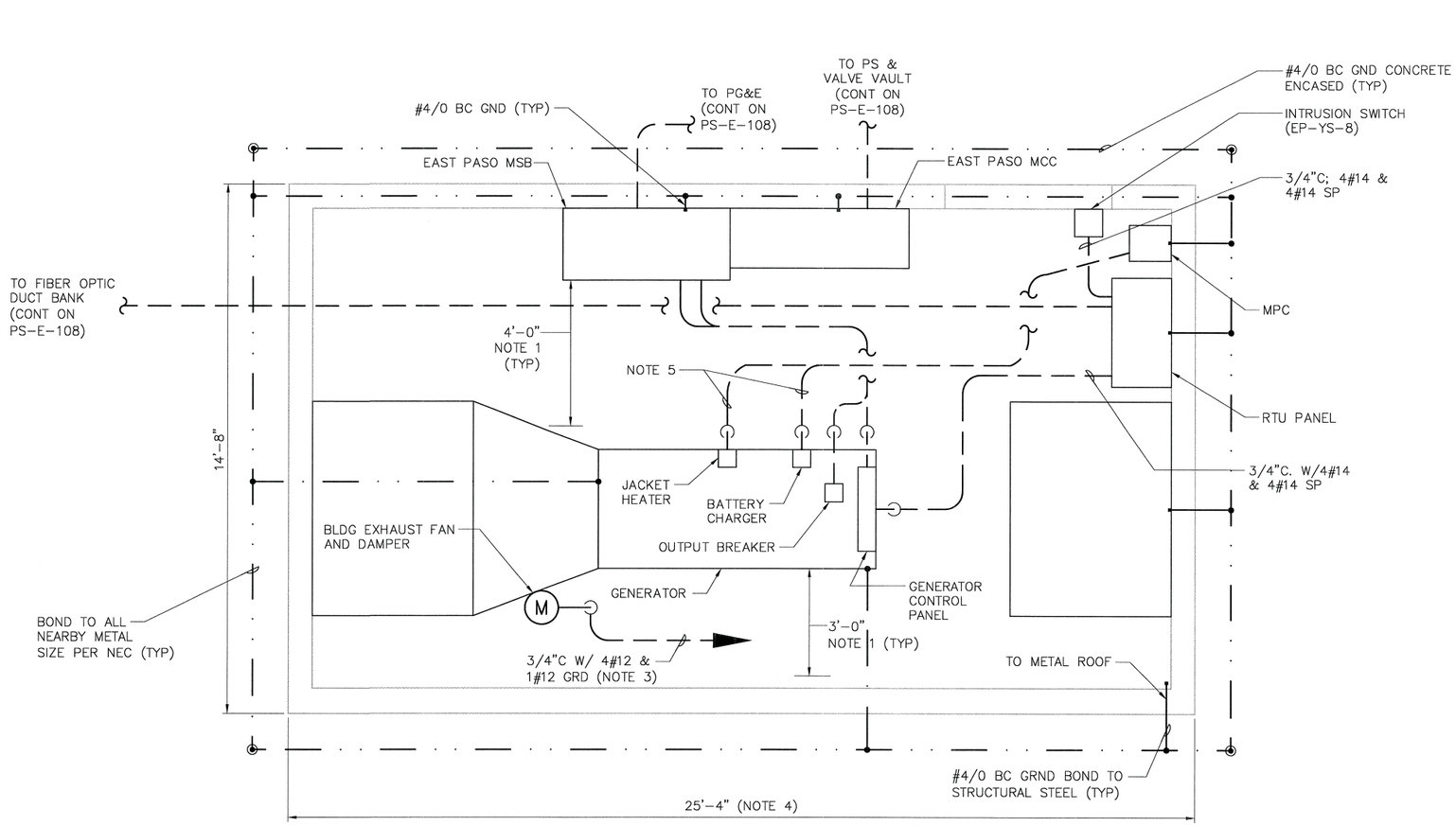

PLAN

1/2" = 1'- 0"

1 0 1 2

NOTES:

1. THE ELECTRICAL AND MECHANICAL EQUIPMENT IS SHOWN IN GENERAL LOCATION ONLY. THE CONTRACTOR SHALL DETERMINE THE EXACT LOCATION OF EQUIPMENT BASED ON THE EQUIPMENT FURNISHED AS REQUIRED TO MAINTAIN THE FOLLOWING MINIMUM CLEARANCES:
   - A MIMIMUM 4'-0" WORKING CLEARANCE IN FRONT OF ALL ELECTRICAL EQUIPMENT.
   - A MINIMUM 3'-0" MAINTENANCE ACCESS CLEARANCE AROUND ALL MECHANICAL EQUIPMENT.
2. REFER TO PS-E-009 FOR LIGHTING AND FIRE DETECTION DETAILS.
3. CONNECT EXHAUST FAN TO MPC VIA ATC. (REFER TO SHEET PS-E-009.)
4. REFER TO STRUCTURAL AND MECHANICAL DRAWINGS FOR ADDITIONAL BUILDING DETAILS.
5. 3/4"C. W/WIRES PER GENERATOR MANUFACTURER'S REQUIREMENTS

REV. NO.	DATE	DRWN	CHKD	REMARKS

DESIGNED BY: CAL
DRAWN BY: JAW
CHECKED BY: GNM
DATE: APRIL 2012

CDM Smith
2295 Gateway Oaks Drive, Suite 240
Sacramento, CA 95833
Tel: (916) 567-9900

0 1/2 1
IF THIS BAR DOES NOT MEASURE 1" THEN ADJUST SCALE ACCORDINGLY

REGISTERED PROFESSIONAL ENGINEER CHARLES M. LIVINGSTON NO. E 8841 Exp. 3/31/2014 ELECTRICAL STATE OF CALIFORNIA

DIGALERT
DIAL TOLL FREE 1-800-642-2444
AT LEAST TWO DAYS BEFORE YOU DIG
UNDERGROUND SERVICE ALERT OF NORTHERN CALIFORNIA

LOS OSOS WASTEWATER COLLECTION SYSTEM
ELECTRICAL
EAST PASO STANDBY POWER BUILDING POWER, INST, & GROUNDING PLAN

PROJECT NO.42502-83120
FILE NAME: PS-E-113
SHEET NO.
PS-E-113

©2012 CDM SMITH ALL RIGHTS RESERVED.
REUSE OF DOCUMENTS: THESE DOCUMENTS AND DESIGNS PROVIDED BY PROFESSIONAL SERVICE, INCORPORATED HEREIN, ARE THE PROPERTY OF CDM SMITH AND ARE NOT TO BE USED, IN WHOLE OR PART, FOR ANY OTHER PROJECT WITHOUT THE WRITTEN AUTHORIZATION OF CDM SMITH.
N:\ACAD2008\los osos\01-sheets\PS\08-ELE\ PS-E-113 04/23/12 14:44 rushmo XREFS: LosOsos-bdr, Cg-cdi, X-ELEC-BUILDING

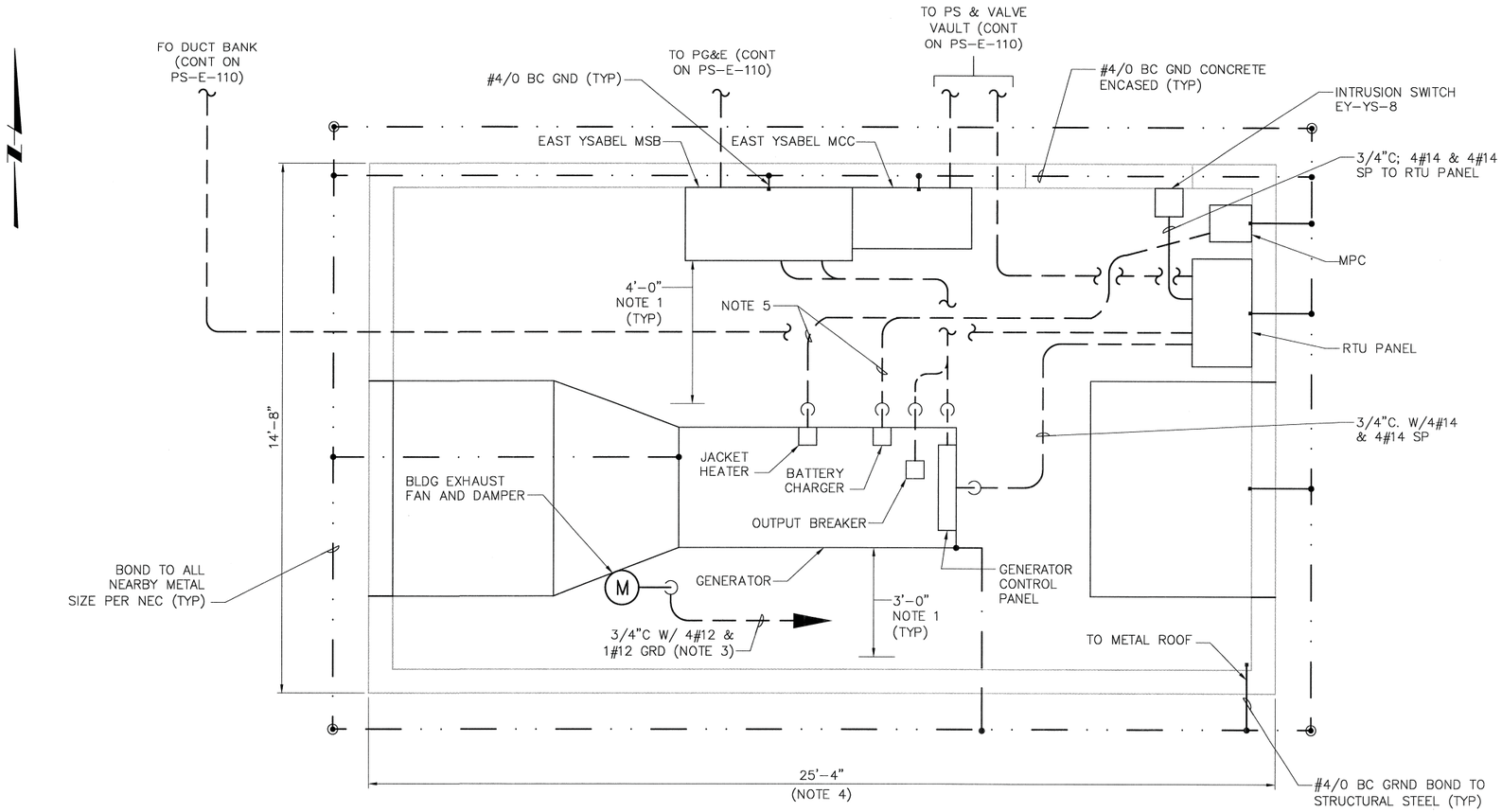

PLAN

1/2" = 1'- 0"

1 0 1 2

NOTES:

1. THE ELECTRICAL AND MECHANICAL EQUIPMENT IS SHOWN IN GENERAL LOCATION ONLY. THE CONTRACTOR SHALL DETERMINE THE EXACT LOCATION OF EQUIPMENT BASED ON THE EQUIPMENT FURNISHED AS REQUIRED TO MAINTAIN THE FOLLOWING MINIMUM CLEARANCES:
   - A MIMIMUM 4'-0" WORKING CLEARANCE IN FRONT OF ALL ELECTRICAL EQUIPMENT.
   - A MINIMUM 3'-0" MAINTENANCE ACCESS CLEARANCE AROUND ALL MECHANICAL EQUIPMENT.
2. REFER TO PS-E-009 FOR LIGHTING AND FIRE DETECTION DETAILS.
3. CONNECT EXHAUST FAN TO MPC VIA ATC. (REFER TO SHEET PS-E-009.)
4. REFER TO STRUCTURAL AND MECHANICAL DRAWINGS FOR ADDITIONAL BUILDING DETAILS.
5. 3/4"C. W/WIRES PER GENERATOR MANUFACTURER'S REQUIREMENTS

©2012 CDM SMITH ALL RIGHTS RESERVED.
REUSE OF DOCUMENTS: THESE DOCUMENTS AND DESIGNS PROVIDED BY PROFESSIONAL SERVICE, INCORPORATED HEREIN, ARE THE PROPERTY OF CDM SMITH AND ARE NOT TO BE USED, IN WHOLE OR PART, FOR ANY OTHER PROJECT WITHOUT THE WRITTEN AUTHORIZATION OF CDM SMITH.
N:\ACAD2008\los osos\01-sheets\PS\08-ELE\ PS-E-114 04/23/12 14:34 rushmo XREFS: LosOsos-bdr, Ca-cal, X-ELEC-BUILDING

REV. NO.	DATE	DRWN	CHKD	REMARKS

DESIGNED BY: CAL
DRAWN BY: JAW
CHECKED BY: GNM
DATE: APRIL 2012

CDM Smith
2295 Gateway Oaks Drive, Suite 240
Sacramento, CA 95833
Tel: (916) 567-9900

0 1/2 1
IF THIS BAR DOES NOT MEASURE 1" THEN ADJUST SCALE ACCORDINGLY

REGISTERED PROFESSIONAL ENGINEER CHARLES M. LINDQUIST II No. E 8841 Exp. 3/31/2014 4/24/12 ELECTRICAL STATE OF CALIFORNIA

DIGALERT
DIAL TOLL FREE 1-800-642-2444
AT LEAST TWO DAYS BEFORE YOU DIG
UNDERGROUND SERVICE ALERT OF NORTHERN CALIFORNIA

LOS OSOS WASTEWATER COLLECTION SYSTEM
ELECTRICAL EAST YSABEL STANDBY POWER BUILDING
POWER, INSTRUMENTATION, & GRD PLAN

PROJECT NO.42502-83120
FILE NAME: PS-E-114
SHEET NO.
PS-E-114

NOTES:

1. REFER TO SPEC 16800 FOR SCOPE OF FIBER OPTIC AND POWER CONDUIT WORK INCLUDED IN THIS CONTRACT.
2. FIBER OPTIC SIZE LEGEND:

   FO-A = 2"

   FO-B = 4"

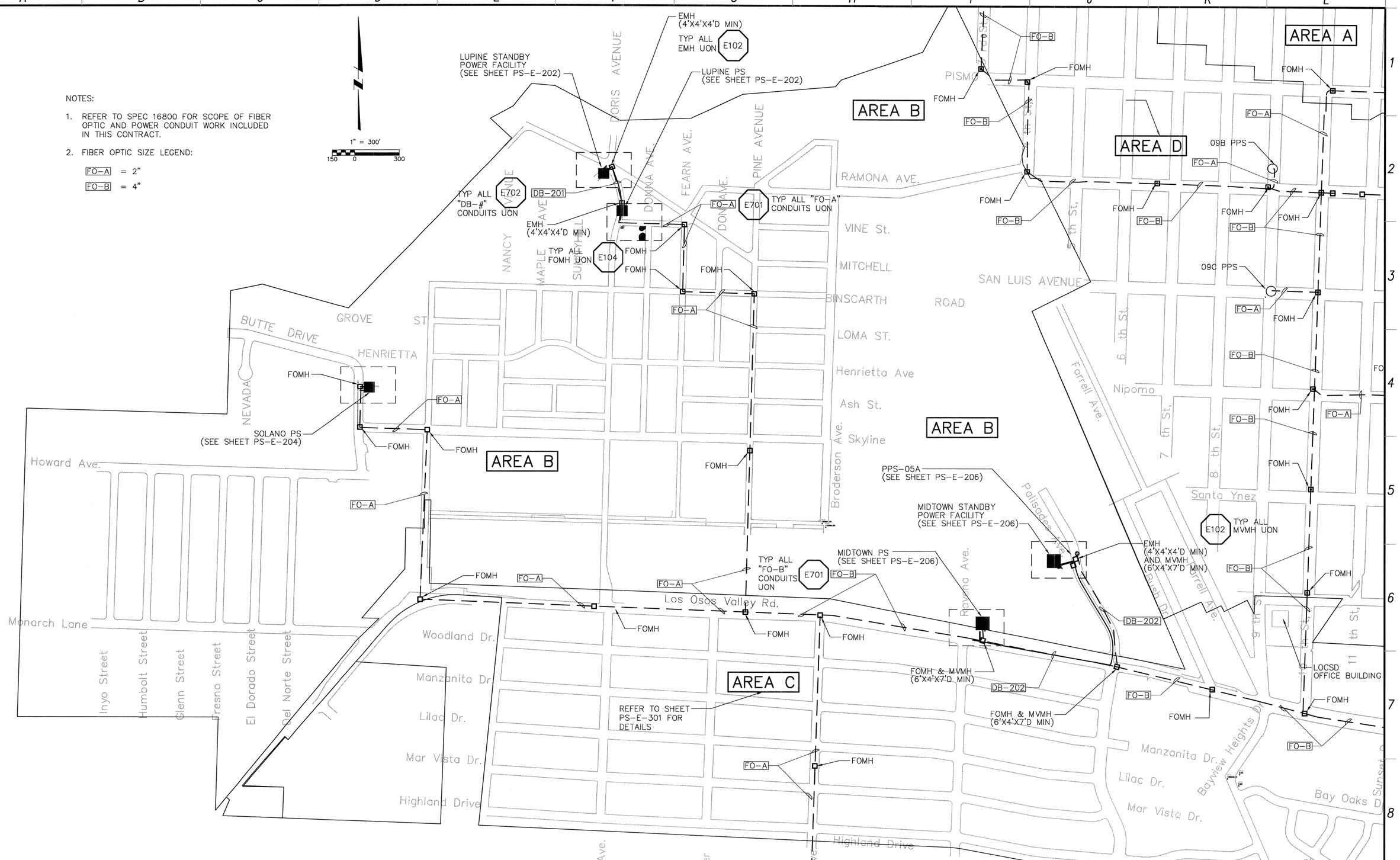

REV. NO.	DATE	DRWN	CHKD	REMARKS

DESIGNED BY: CAL
DRAWN BY: JAW
CHECKED BY: GNM
DATE: APRIL 2012

CDM Smith
2295 Gateway Oaks Drive, Suite 240
Sacramento, CA 95833
Tel: (916) 567-9900

0 1/2 1
IF THIS BAR DOES NOT MEASURE 1" THEN ADJUST SCALE ACCORDINGLY

REGISTERED PROFESSIONAL ENGINEER CHARLES A. WALDSCHMIDT II No. E 8841 Exp. 3/31/2014 ELECTRICAL STATE OF CALIFORNIA

DIGALERT
DIAL TOLL FREE 1-800-642-2444
AT LEAST TWO DAYS BEFORE YOU DIG
UNDERGROUND SERVICE ALERT OF NORTHERN CALIFORNIA

LOS OSOS WASTEWATER COLLECTION SYSTEM

ELECTRICAL GENERAL AREA PLAN AREA B

PROJECT NO. 42502-83120
FILE NAME: PS-E-201
SHEET NO.
PS-E-201

©2012 CDM SMITH ALL RIGHTS RESERVED.
REUSE OF DOCUMENTS: THESE DOCUMENTS AND DESIGNS PROVIDED BY PROFESSIONAL SERVICE, INCORPORATED HEREIN, ARE THE PROPERTY OF CDM SMITH AND ARE NOT TO BE USED, IN WHOLE OR PART, FOR ANY OTHER PROJECT WITHOUT THE WRITTEN AUTHORIZATION OF CDM SMITH.
N:\ACAD2008\los osos\01-sheets\PS\08-ELE\ PS-E-201 03/27/12 08:26 rushma XREFS: LosOsos-bdr, loc_mdl, x-feat-row, Co-cai, AREA-C-MIDTOWN-PS, FIBER-OPTIC-keyplan, X-PS-E-FO-02

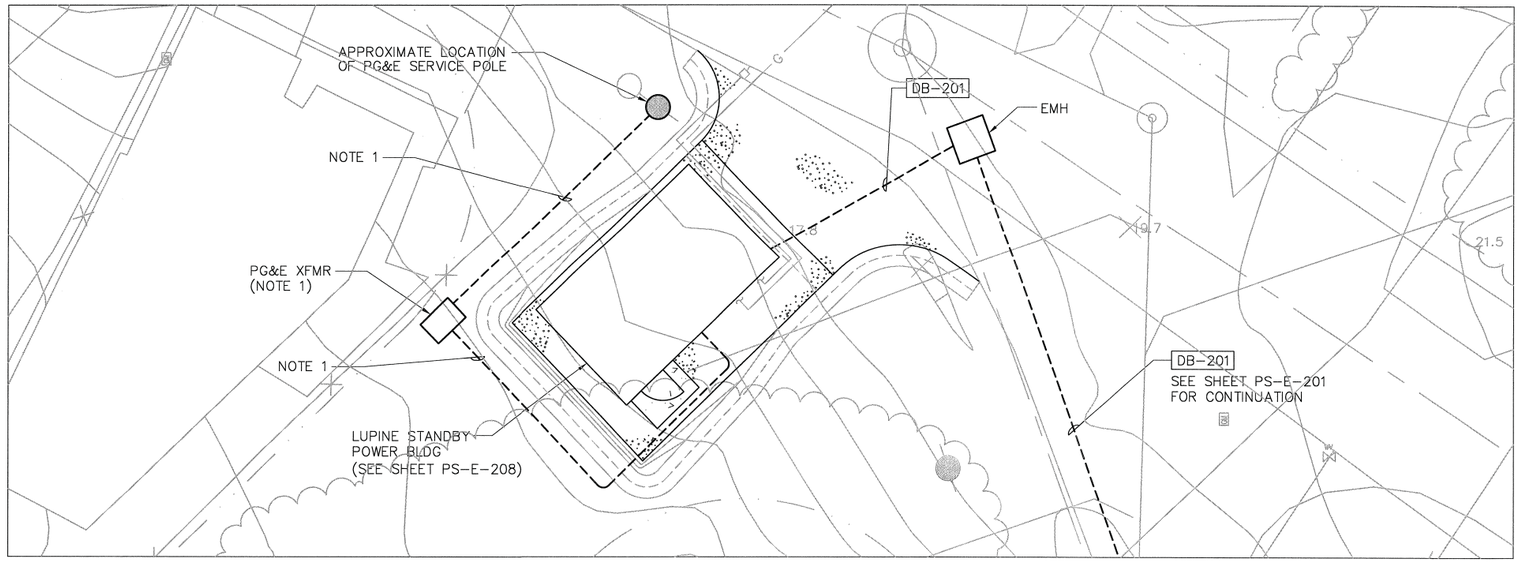

STANDBY POWER BUILDING AREA PLAN

PLAN

1" = 10'

5 0 10

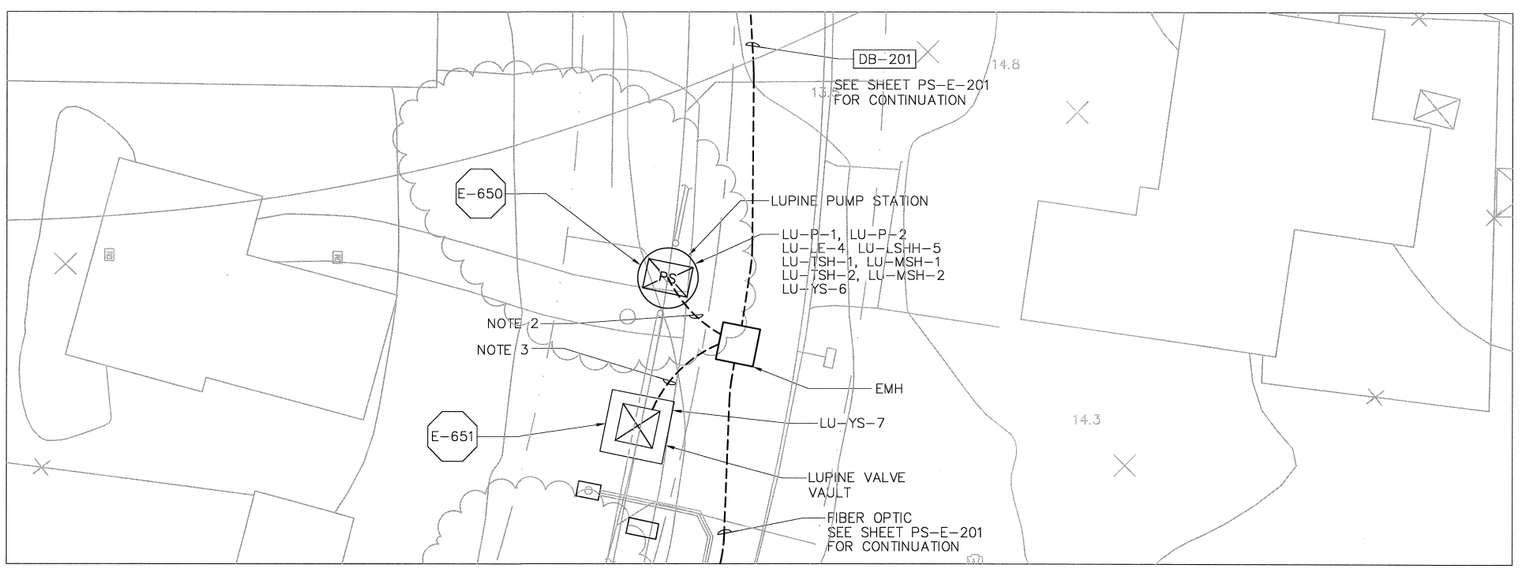

SUBMERSIBLE PUMP STATION AREA PLAN

PLAN

1" = 10'

5 0 10

NOTES:

1. PG&E SERVICE: CONTRACTOR SHALL FURNISH, INSTALL AND COORDINATE ALL WORK INCLUDING AS A MINIMUM THE FOLLOWING:
   - SERVICE POLE RISER CONDUIT
   - PRIMARY CONDUIT: 1 – 4" C WITH PULL ROPE
   - SECONDARY CONDUIT: 1 – 5" C WITH PULL ROPE
   - TRANSFORMER PAD
   - OBTAIN PG&E APPROVAL PRIOR TO CONSTRUCTION
   - ALL WORK AND MATERIAL SHALL BE PER PG&E REQUIREMENTS
2. POWER/CONTROL DUCTBANK SHALL CONTAIN:
   - (2)[2"C. W/3#1 & 1#1 GRD]
   - (1)[1"C. W/12#14, 6#14 SPARE & 1#14 GRD]

   SIGNAL DUCTBANK SHALL CONTAIN:
   - (1)[1"C. (1)2/C #16 SHLD & (1)2/C #16 SHLD SPARE] (OR AS REQUIRED FOR LU-LE-4 FURNISHED.)

   CONTRACTOR SHALL MAINTAIN 12" SEPARATION BETWEEN DUCTBANKS.
3. CONTROL DUCTBANK SHALL CONTAIN:
   - (1)[1"C. W/2#14, 4#14 SPARE & 1#14 GRD]

DB-201 DUCTBANK SCHEDULE

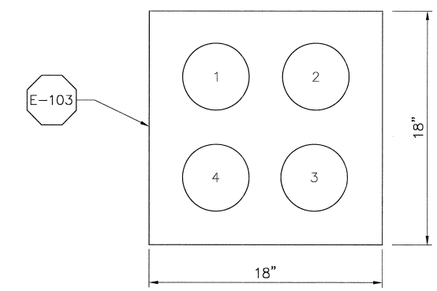

DUCT	CONDUIT	REMARKS
1	2"C; WITH WIRES PER NOTES 2 & 3	LU CONTROL & SIGNAL
2	2"C	F.O.
3	2"C; WITH WIRES PER NOTE 2	LU-P-1 POWER
4	2"C; WITH WIRES PER NOTE 2	LU-P-2 POWER

REV. NO.	DATE	DRWN	CHKD	REMARKS

DESIGNED BY: CAL
DRAWN BY: WKT
CHECKED BY: GNM
DATE: APRIL 2012

CDM Smith
2295 Gateway Oaks Drive, Suite 240
Sacramento, CA 95833
Tel: (916) 567-9900

0 1/2 1
IF THIS BAR DOES NOT MEASURE 1" THEN ADJUST SCALE ACCORDINGLY

REGISTERED PROFESSIONAL ENGINEER CHARLES T. GNIMBLE No. E 6041 Exp. 12/31/2014 4/24/12 ELECTRICAL STATE OF CALIFORNIA

DIGALERT DIAL TOLL FREE 1-800-642-2444 AT LEAST TWO DAYS BEFORE YOU DIG
UNDERGROUND SERVICE ALERT OF NORTHERN CALIFORNIA

LOS OSOS WASTEWATER COLLECTION SYSTEM

ELECTRICAL
LUPINE SUBMERSIBLE PUMP STATION & STANDBY POWER BLDG SITE POWER PLAN

PROJECT NO.42502-83120
FILE NAME: PS-E-202

SHEET NO.
PS-E-202

©2012 CDM SMITH ALL RIGHTS RESERVED.
REUSE OF DOCUMENTS: THESE DOCUMENTS AND DESIGNS PROVIDED BY PROFESSIONAL SERVICE, INCORPORATED HEREIN, ARE THE PROPERTY OF CDM SMITH AND ARE NOT TO BE USED, IN WHOLE OR PART, FOR ANY OTHER PROJECT WITHOUT THE WRITTEN AUTHORIZATION OF CDM SMITH.
N:\ACAD2008\los osos\01-sheets\PS\08-ELEC\ PS-E-202 04/18/12 14:04 weinerja XREFS: x-feat-tapo10x, x-feat-row10x, ax-util-all, LosOsos-bdr, x-feat-aerl_nor10x, x-feat-topo-supp, x-feat-aerl-sou10x, bn-util-ss, ca-cal, loc_mdl

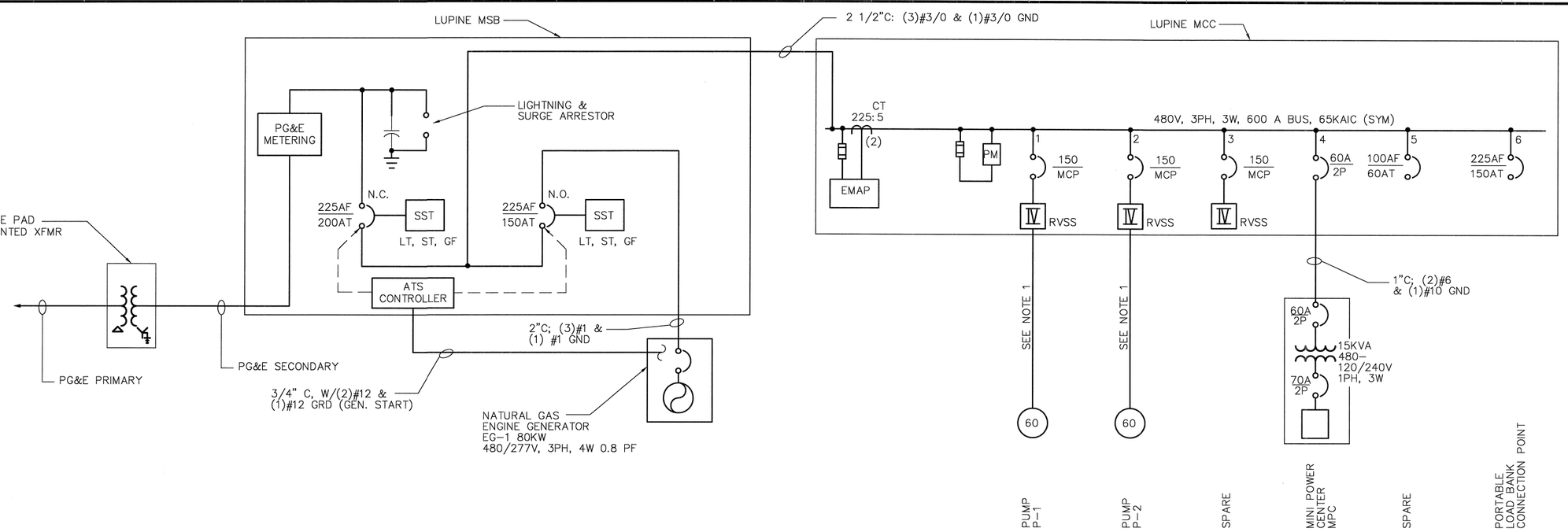

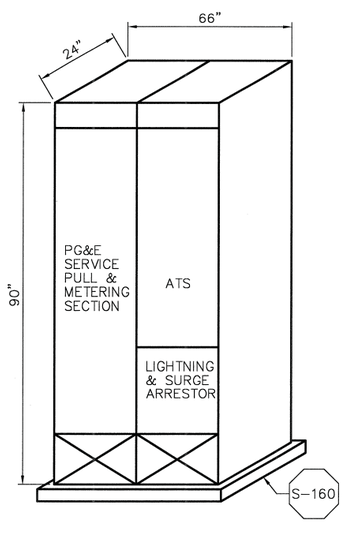

LUPINE MSB

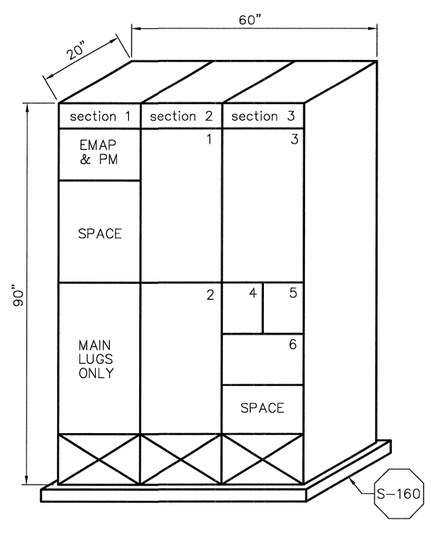

LUPINE MCC

LUPINE				
	LOAD		AMPS @ 480V, 3P	
ITEM	KVA	HP	CONNECTED	DEMAND
P-1	--	60	77	54
P-2	--	60	77	54
MPC	15	--	31	21
TOTAL	--	--	185	129

NOTES:

1. SEE SHEET PS-E-202 FOR CONDUIT AND WIRE SIZE

REV. NO.	DATE	DRWN	CHKD	REMARKS

DESIGNED BY: CAL
DRAWN BY: JAW
CHECKED BY: GNM
DATE: APRIL 2012

CDM Smith
2295 Gateway Oaks Drive, Suite 240
Sacramento, CA 95833
Tel: (916) 567-9900

0 1/2 1
IF THIS BAR DOES NOT MEASURE 1" THEN ADJUST SCALE ACCORDINGLY

REGISTERED PROFESSIONAL ENGINEER CHARLES A. LINDQUIST II No. E 8841 Exp. 3/31/2014 4/21/12 ELECTRICAL STATE OF CALIFORNIA

DIGALERT
DIAL TOLL FREE 1-800-642-2444 AT LEAST TWO DAYS BEFORE YOU DIG
UNDERGROUND SERVICE ALERT OF NORTHERN CALIFORNIA

LOS OSOS WASTEWATER COLLECTION SYSTEM
ELECTRICAL
LUPINE PS & STANDBY POWER
SINGLE LINE

PROJECT NO. 42502-83120
FILE NAME: PS-E-203
SHEET NO.
PS-E-203

©2012 CDM SMITH ALL RIGHTS RESERVED.
REUSE OF DOCUMENTS: THESE DOCUMENTS AND DESIGNS PROVIDED BY PROFESSIONAL SERVICE, INCORPORATED HEREIN, ARE THE PROPERTY OF CDM SMITH AND ARE NOT TO BE USED, IN WHOLE OR PART, FOR ANY OTHER PROJECT WITHOUT THE WRITTEN AUTHORIZATION OF CDM SMITH.
N:\ACAD2008\los osos\01-sheets\PS\08-ELE\ PS-E-203 04/20/12 17:35 rushma XREFS: LosOsos-bdr, Ca-cal

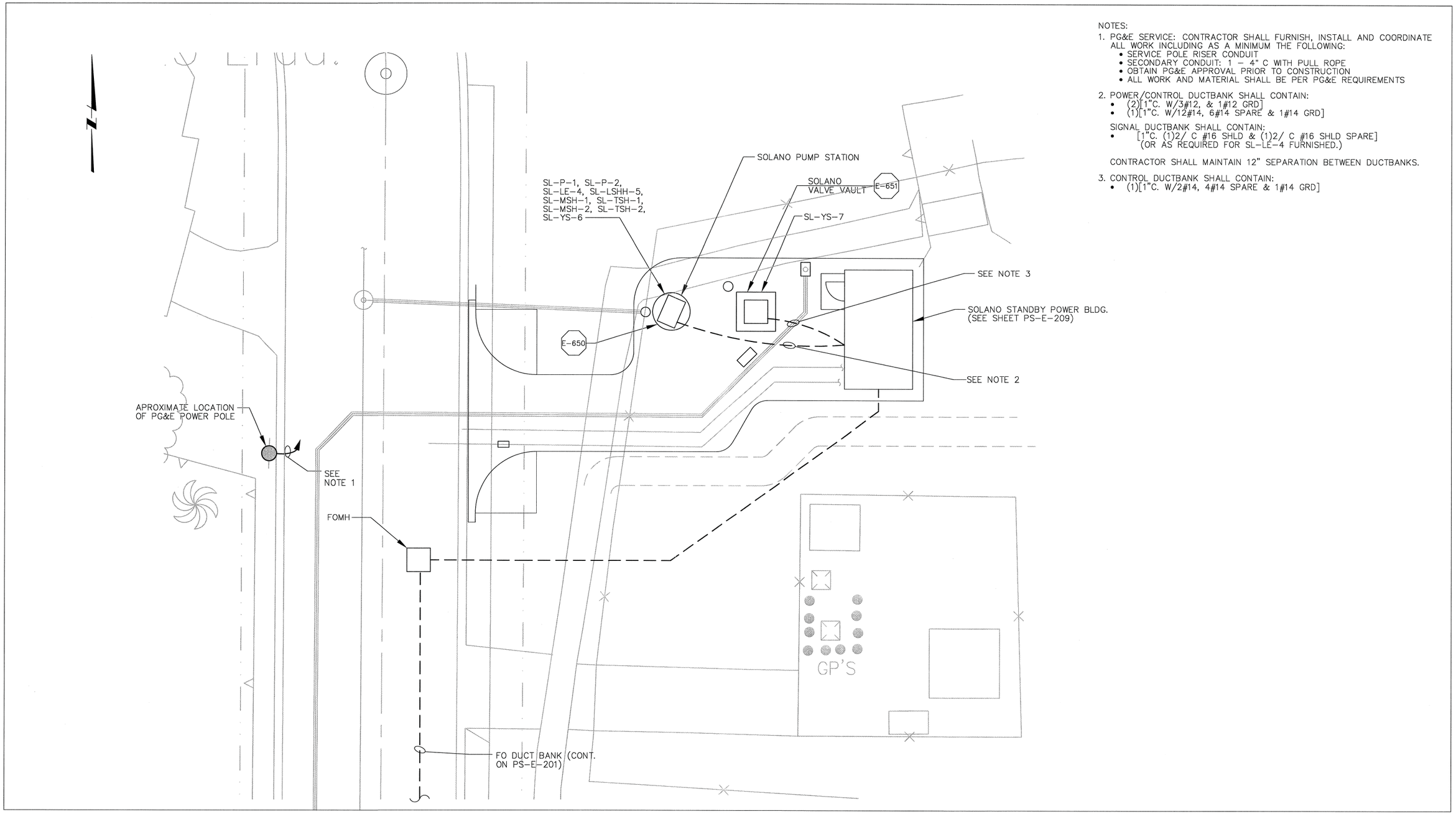

NOTES:

1. PG&E SERVICE: CONTRACTOR SHALL FURNISH, INSTALL AND COORDINATE ALL WORK INCLUDING AS A MINIMUM THE FOLLOWING:
   - SERVICE POLE RISER CONDUIT
   - SECONDARY CONDUIT: 1 – 4" C WITH PULL ROPE
   - OBTAIN PG&E APPROVAL PRIOR TO CONSTRUCTION
   - ALL WORK AND MATERIAL SHALL BE PER PG&E REQUIREMENTS
2. POWER/CONTROL DUCTBANK SHALL CONTAIN:
   - (2)[1"C. W/3#12, & 1#12 GRD]
   - (1)[1"C. W/12#14, 6#14 SPARE & 1#14 GRD]

   SIGNAL DUCTBANK SHALL CONTAIN:
   - [1"C. (1)2/ C #16 SHLD & (1)2/ C #16 SHLD SPARE] (OR AS REQUIRED FOR SL-LE-4 FURNISHED.)

   CONTRACTOR SHALL MAINTAIN 12" SEPARATION BETWEEN DUCTBANKS.
3. CONTROL DUCTBANK SHALL CONTAIN:
   - (1)[1"C. W/2#14, 4#14 SPARE & 1#14 GRD]

SOLANO SUBMERSIBLE PUMP STATION SITE POWER, LIGHTING & GROUNDING

PLAN

1" = 10'

5 0 10

REV. NO.	DATE	DRWN	CHKD	REMARKS

DESIGNED BY: CAL
DRAWN BY: WKT
CHECKED BY: GNM
DATE: APRIL 2012

CDM Smith
2295 Gateway Oaks Drive, Suite 240
Sacramento, CA 95833
Tel: (916) 567-9900

0 1/2 1
IF THIS BAR DOES NOT MEASURE 1" THEN ADJUST SCALE ACCORDINGLY

REGISTERED PROFESSIONAL ENGINEER
LIMOGNOT II
REG. E 6841
Exp. 3/31/2014
ELECTRICAL
STATE OF CALIFORNIA

DIGALERT
DIAL TOLL FREE
1-800-642-2444
AT LEAST TWO DAYS BEFORE YOU DIG
UNDERGROUND SERVICE ALERT OF NORTHERN CALIFORNIA

LOS OSOS WASTEWATER COLLECTION SYSTEM

ELECTRICAL
SOLANO SUBMERSIBLE PUMP STATION SITE
POWER PLAN

PROJECT NO. 42502-83120
FILE NAME: PS-E-204
SHEET NO.
PS-E-204

©2012 CDM SMITH ALL RIGHTS RESERVED.
RELEASE OF DOCUMENTS: THESE DOCUMENTS AND DESIGNS PROVIDED BY PROFESSIONAL SERVICE, INCORPORATED HEREIN, ARE THE PROPERTY OF CDM SMITH AND ARE NOT TO BE USED, IN WHOLE OR PART, FOR ANY OTHER PROJECT WITHOUT THE WRITTEN AUTHORIZATION OF CDM SMITH.
N:\ACAD2008\los osos\01-sheets\PS\08-ELE\ PS-E-204 04/18/12 15:26 weinerja XREFS: x-feat-row, x-feat-cerf-sou, loc_mdl, LosOsos-bdr, Cg-cdl

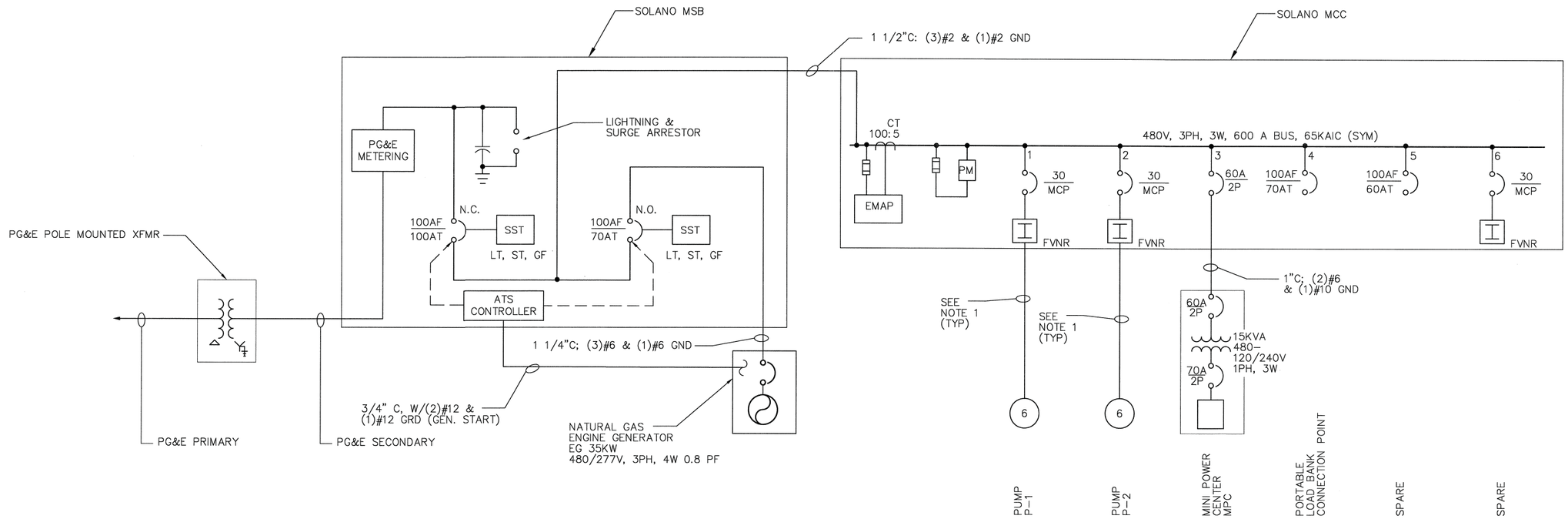

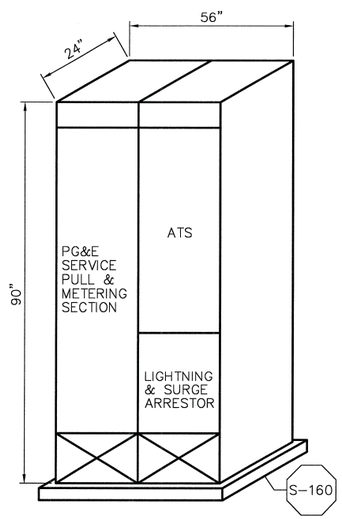

SOLANO MSB

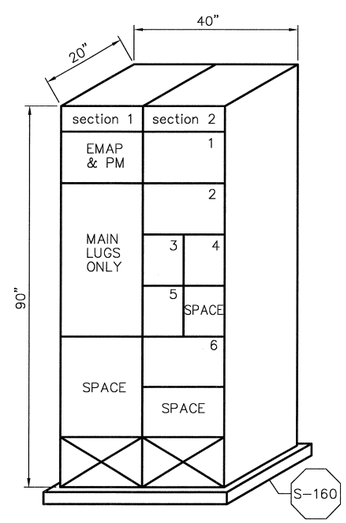

SOLANO MCC

NOTE:

1. SEE SHEET PS-E-204 FOR CONDUIT AND WIRE SIZES

	SOLANO			
	LOAD		AMPS @ 480V, 3P	
ITEM	KVA	HP	CONNECTED	DEMAND
P-1	--	7.5	11	8
P-2	--	7.5	11	8
MPC	15	--	31	21
TOTAL	--	--	53	36

REV. NO.	DATE	DRWN	CHKD	REMARKS

DESIGNED BY: CAL
DRAWN BY: WKT
CHECKED BY: GNM
DATE: APRIL 2012

CDM Smith
2295 Gateway Oaks Drive, Suite 240
Sacramento, CA 95833
Tel: (916) 567-9900

0 1/2 1
IF THIS BAR DOES NOT MEASURE 1" THEN ADJUST SCALE ACCORDINGLY

DIGALERT
DIAL TOLL FREE 1-800-642-2444
AT LEAST TWO DAYS BEFORE YOU DIG
UNDERGROUND SERVICE ALERT OF NORTHERN CALIFORNIA

LOS OSOS WASTEWATER COLLECTION SYSTEM
ELECTRICAL
SOLANO PS & STANDBY POWER
SINGLE LINE

PROJECT NO.42502-83120
FILE NAME: PS-E-205
SHEET NO.
PS-E-205

©2012 CDM SMITH ALL RIGHTS RESERVED.
REUSE OF DOCUMENTS: THESE DOCUMENTS AND DESIGNS PROVIDED BY PROFESSIONAL SERVICE, INCORPORATED HEREIN, ARE THE PROPERTY OF CDM SMITH AND ARE NOT TO BE USED, IN WHOLE OR PART, FOR ANY OTHER PROJECT WITHOUT THE WRITTEN AUTHORIZATION OF CDM SMITH.
N:\AQAD2008\los osos\01-sheets\PS\08-ELE\ PS-E-205 04/20/12 18:06 rushmo XREFS: LosOsos-bdr, Ca-cal

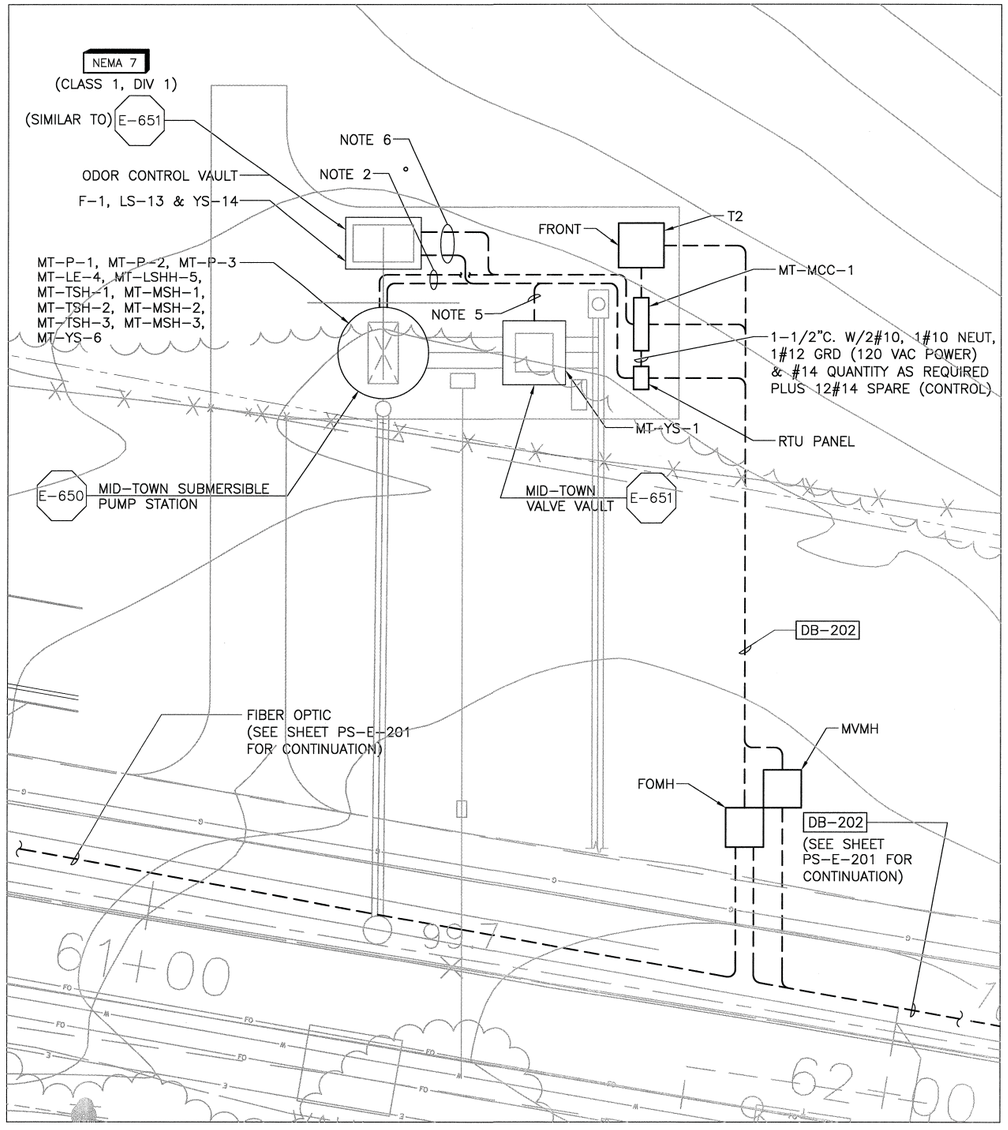

MID-TOWN PS AREA PLAN

PLAN

1" = 10'

5 0 10

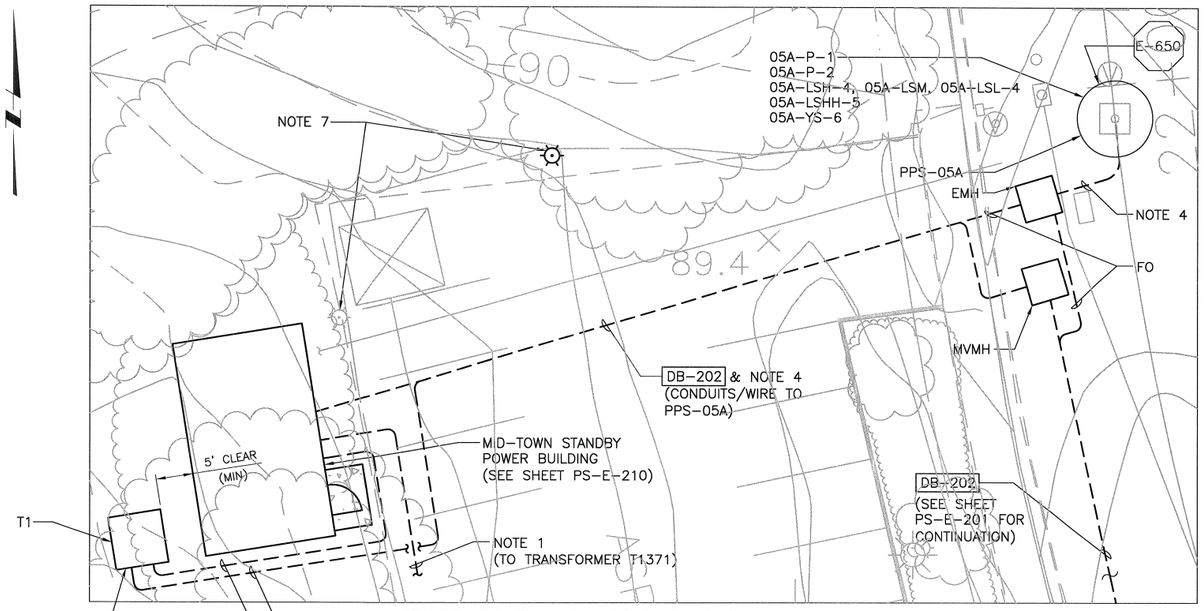

STANDBY POWER & 5A POCKET PUMP STATION AREA PLAN

PLAN

1" = 10'

5 0 10

DB-202
DUCTBANK SCHEDULE

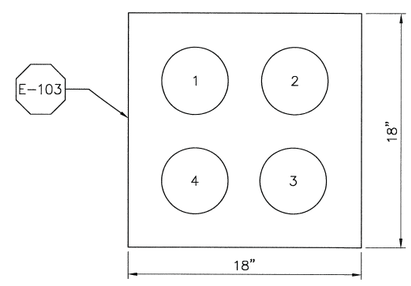

DUCT	CONDUIT	REMARKS
1	4"C;(3) #2-15KV 133% INSUL 105°C & (1) #2-600V INSUL GND	BW PS POWER
2	4"C	FIBER OPTIC
3	4"C	SPARE
4	4"C	SPARE

NOTES:

1. PG&E SERVICE: CONTRACTOR SHALL FURNISH, INSTALL AND COORDINATE ALL WORK INCLUDING AS A MINIMUM THE FOLLOWING:
   - SECONDARY CONDUIT CONNECTION TO EXISTING PG&E TRANSFORMER NO. T1371. (T1371 IS LOCATED APPROX 70 SOUTH OF THE MIDTOWN STANDBY POWER BUILDING).
   - SECONDARY CONDUIT: 2 – 5" C WITH PULL ROPE.
   - OBTAIN PG&E APPROVAL PRIOR TO CONSTRUCTION.
   - ALL WORK AND MATERIAL SHALL BE PER PG&E REQUIREMENTS
2. MTPS POWER/CONTROL DUCTBANK SHALL CONTAIN:
   - (3)[2"C. W/3#1, & 1#4 GRD]
   - (1)[1"C. W/16#14, 8#14 SPARE & 1#14 GRD]

   SIGNAL DUCTBANK SHALL CONTAIN:
   - [1"C. W/(2)2/C#16 SHLD & (2)2C#16 SHLD SPARE] (OR AS REQUIRED FOR MT-LE-4 FURNISHED.)
3. T1 & T2 SHALL BE FURNISHED AND INSTALLED BY CONTRACTOR. FURNISH AND INSTALL PREFABRICATED CONCRETE PAD FOR T1 & T2. PAD AND TRANSFORMER INSTALLATION AND GROUNDING SHALL BE IN FULL COMPLIANCE WITH PG&E GREENBOOK REQUIREMENTS.
4. PPS-05A POWER/CONTROL DUCTBANK SHALL CONTAIN:
   - (2)[1"C. W/2#10, & 1#10 GRD]
   - (1)[1"C. W/10#14, 6#14 SPARE & 1#14 GRD]
5. VALVE VAULT CONTROL DUCTBANK SHALL CONTAIN:
   - (1)[1"C. W/2#14, 6#14 SPARE & 1#14 GRD]
6. ODOR CONTROL POWER/CONTROL DUCTBANK SHALL CONTAIN:
   - (1)[1"C. W/3#12, & 1#12 GRD]
   - (1)[1"C. W/4#14, 4#14 SPARE & 1#14 GRD]
7. RELOCATE EXISTING LIGHTING FIXTURE AND CONDUIT/WIRE AS REQUIRED. EXACT LOCATION TO BE DETERMINED BY OWNER DURING CONSTRUCTION.

REV. NO.	DATE	DRWN	CHKD	REMARKS

DESIGNED BY: CAL
DRAWN BY: WKT
CHECKED BY: GNM
DATE: APRIL 2012

CDM Smith
2295 Gateway Oaks Drive, Suite 240
Sacramento, CA 95833
Tel: (916) 567-9900

0 1/2 1
IF THIS BAR DOES NOT MEASURE 1" THEN ADJUST SCALE ACCORDINGLY

REGISTERED PROFESSIONAL ENGINEER
JAMES A. WORKMAN
No. E 8841
Exp. 3/31/2014
ELECTRICAL
STATE OF CALIFORNIA

DIGALERT
DIAL TOLL FREE
1-800-642-2444
AT LEAST TWO DAYS BEFORE YOU DIG
UNDERGROUND SERVICE ALERT OF NORTHERN CALIFORNIA

LOS OSOS WASTEWATER COLLECTION SYSTEM

MID-TOWN PUMP STATION & PPS 5A SITE ELECTRICAL POWER PLAN

PROJECT NO.42502-83120
FILE NAME: PS-E-206
SHEET NO.
PS-E-206

©2012 CDM SMITH ALL RIGHTS RESERVED.
REUSE OF DOCUMENTS: THESE DOCUMENTS AND DESIGNS PROVIDED BY PROFESSIONAL SERVICE, INCORPORATED HEREIN, ARE THE PROPERTY OF CDM SMITH AND ARE NOT TO BE USED, IN WHOLE OR PART, FOR ANY OTHER PROJECT WITHOUT THE WRITTEN AUTHORIZATION OF CDM SMITH.
N:\ACAD2008\los osos\01-sheets\PS\08-ELE\ PS-E-206 04/24/12 10:04 weinerja XREFS: N-FEAT-CNBL, X-FEAT-ADDR, X-FEAT-APN, X-FEAT-GOED, X-FEAT-ROW, autocad_bdr, N-UTIL-SS, ML, X-FEAT-AERL, X-FEAT-TOPO, X-UTIL-FIBR, X-UTIL-GAS, X-UTIL

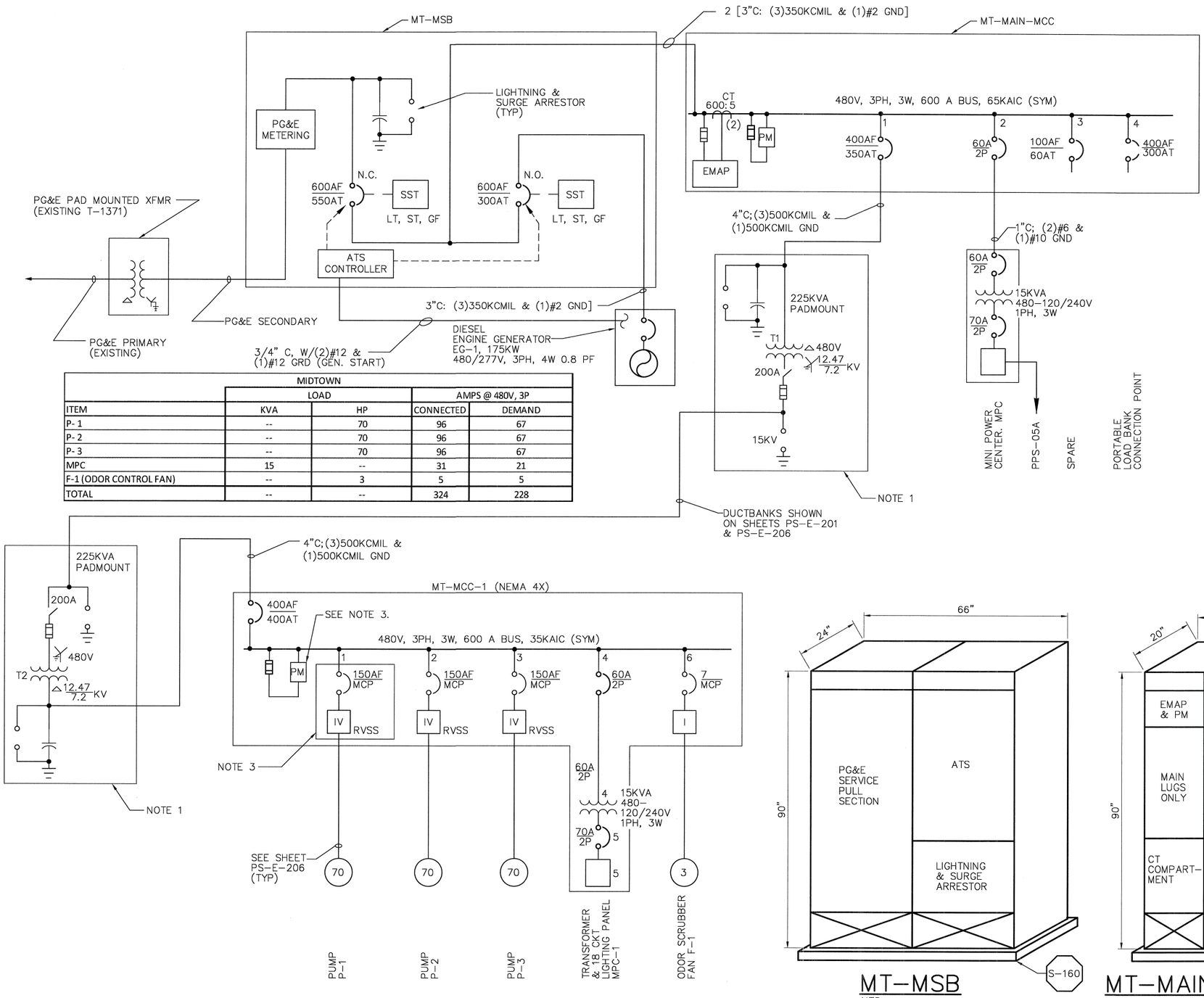

	MIDTOWN			
	LOAD		AMPS @ 480V, 3P	
ITEM	KVA	HP	CONNECTED	DEMAND
P- 1	--	70	96	67
P- 2	--	70	96	67
P- 3	--	70	96	67
MPC	15	--	31	21
F-1 (ODOR CONTROL FAN)	--	3	5	5
TOTAL	--	--	324	228

MT-MSB
NTS

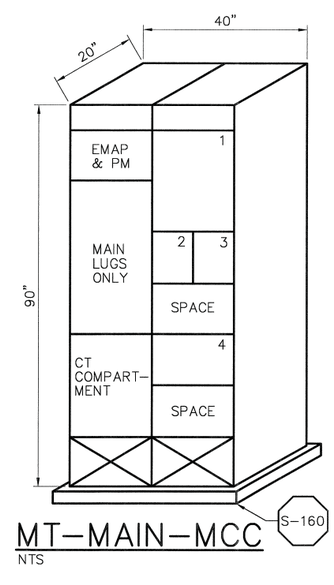

MT-MAIN-MCC
NTS

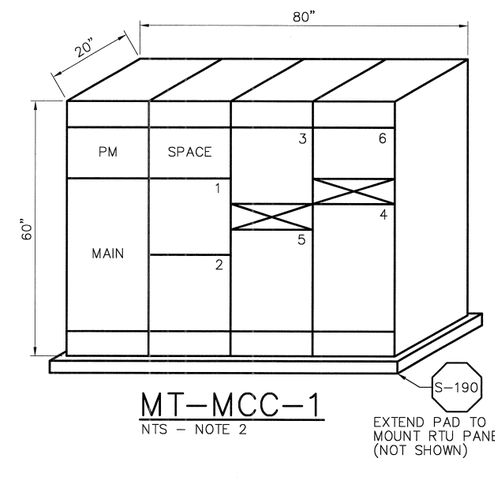

MT-MCC-1
NTS – NOTE 2

EXTEND PAD TO MOUNT RTU PANEL (NOT SHOWN)

NOTES:

1. TRANSFORMER T1 & T2 SHALL BE FURNISHED AND INSTALLED BY CONTRACTOR. REFER TO SPEC 16431 FOR ADDITIONAL DETAILS.
2. MT-MCC-1 SHALL BE A LOW PROFILE DESIGN. NEMA 4X STAINLESS STEEL EXTERIOR ENCLOSURE REQUIRED BUT NOT SHOWN ON ELEVATION. REFER TO SPEC 16480 FOR ADDITIONAL REQUIREMENTS.
3. PROVIDE ONE COMPLETE SPARE RVSS/CIRCUIT BREAKER ASSEMBLY (INCLUDING MCC BUCKET AND ALL APPURTENANCES) IDENTICAL TO THOSE INSTALLED. (BOX AND DELIVER TO OWNER AS DETAILED IN SPECS.)

REV. NO.	DATE	DRWN	CHKD	REMARKS

DESIGNED BY: CAL
DRAWN BY: WKT
CHECKED BY: GNM
DATE: APRIL 2012

CDM Smith
2295 Gateway Oaks Drive, Suite 240
Sacramento, CA 95833
Tel: (916) 567-9900

0 1/2 1
IF THIS BAR DOES NOT MEASURE 1" THEN ADJUST SCALE ACCORDINGLY

REGISTERED PROFESSIONAL ENGINEER GARY NEIL GNEZDILOV No. E 8841 Exp. 3/31/2014 ELECTRICAL STATE OF CALIFORNIA

DIGALERT
DIAL TOLL FREE 1-800-642-2444
AT LEAST TWO DAYS BEFORE YOU DIG
UNDERGROUND SERVICE ALERT OF NORTHERN CALIFORNIA

LOS OSOS WASTEWATER COLLECTION SYSTEM
ELECTRICAL
MID-TOWN PS & STANDBY POWER
SINGLE LINE

PROJECT NO.42502-83120
FILE NAME: PS-E-207
SHEET NO.
PS-E-207

©2012 CDM SMITH ALL RIGHTS RESERVED.
REUSE OF DOCUMENTS: THESE DOCUMENTS AND DESIGNS PROVIDED BY PROFESSIONAL SERVICE, INCORPORATED HEREIN, ARE THE PROPERTY OF CDM SMITH AND ARE NOT TO BE USED, IN WHOLE OR PART, FOR ANY OTHER PROJECT WITHOUT THE WRITTEN AUTHORIZATION OF CDM SMITH.
N:\ACAD2008\los osos\01-sheets\PS\06-ELE\ PS-E-207 04/23/12 11:31 (gibotwk XREFS: LosOsos-bar, Ca-cal

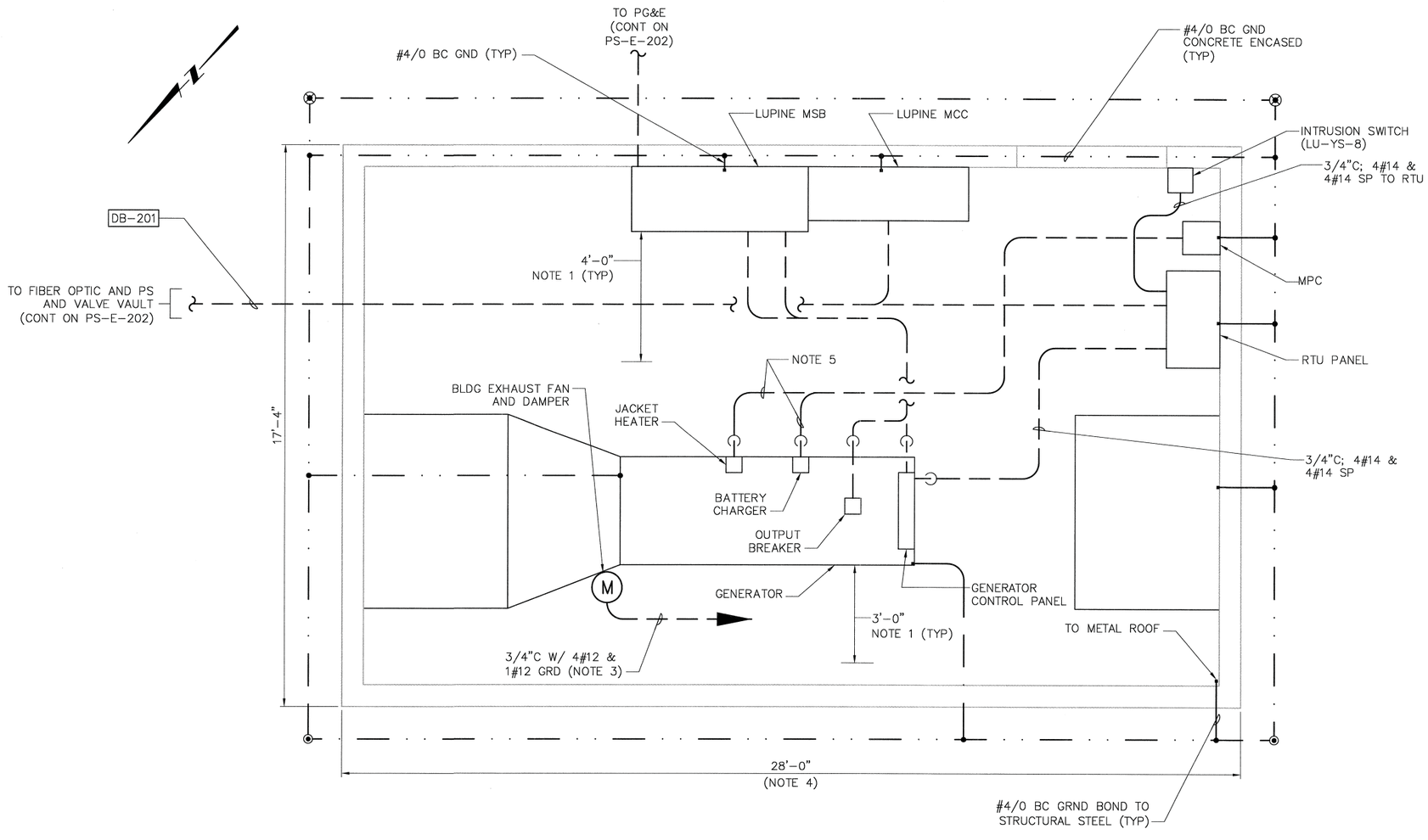

PLAN

1/2" = 1'- 0"

1 0 1 2

NOTES:

1. THE ELECTRICAL AND MECHANICAL EQUIPMENT IS SHOWN IN GENERAL LOCATION ONLY. THE CONTRACTOR SHALL DETERMINE THE EXACT LOCATION OF EQUIPMENT BASED ON THE EQUIPMENT FURNISHED AS REQUIRED TO MAINTAIN THE FOLLOWING MINIMUM CLEARANCES:
   - A MIMIMUM 4'-0" WORKING CLEARANCE IN FRONT OF ALL ELECTRICAL EQUIPMENT.
   - A MINIMUM 3'-0" MAINTENANCE ACCESS CLEARANCE AROUND ALL MECHANICAL EQUIPMENT.
2. REFER TO PS-E-009 FOR LIGHTING AND FIRE DETECTION DETAILS.
3. CONNECT EXHAUST FAN TO MPC VIA ATC. (REFER TO SHEET PS-E-009.)
4. REFER TO STRUCTURAL AND MECHANICAL DRAWINGS FOR ADDITIONAL BUILDING DETAILS.
5. 3/4"C. W/WIRES PER GENERATOR MANUFACTURER'S REQUIREMENTS

REV. NO.	DATE	DRWN	CHKD	REMARKS

DESIGNED BY: CAL
DRAWN BY: JAW
CHECKED BY: GNM
DATE: APRIL 2012

CDM Smith
2295 Gateway Oaks Drive, Suite 240
Sacramento, CA 95833
Tel: (916) 567-9900

0 1/2 1
IF THIS BAR DOES NOT MEASURE 1" THEN ADJUST SCALE ACCORDINGLY

REGISTERED PROFESSIONAL ENGINEER
CHARLES E. WORSTELL
No. E 8941
Exp. 3/31/2014
ELECTRICAL
STATE OF CALIFORNIA

DIGALERT
DIAL TOLL FREE
1-800-642-2444
AT LEAST TWO DAYS BEFORE YOU DIG
UNDERGROUND SERVICE ALERT OF NORTHERN CALIFORNIA

LOS OSOS WASTEWATER COLLECTION SYSTEM
ELECTRICAL
LUPINE STANDBY POWER BUILDING
POWER, INSTRUMENTATION, & GRD PLAN

PROJECT NO.42502-83120
FILE NAME: PS-E-208
SHEET NO.
PS-E-208

©2012 CDM SMITH ALL RIGHTS RESERVED.
REUSE OF DOCUMENTS: THESE DOCUMENTS AND DESIGNS PROVIDED BY PROFESSIONAL SERVICE, INCORPORATED HEREIN, ARE THE PROPERTY OF CDM SMITH AND ARE NOT TO BE USED, IN WHOLE OR PART, FOR ANY OTHER PROJECT WITHOUT THE WRITTEN AUTHORIZATION OF CDM SMITH.
N:\ACAD2008\los osos\01-sheets\PS\08-ELE\ PS-E-208 04/23/12 12:50 weinerja XREFS: LosOsos-bdr, Co-cal, X-ELEC-BUILDING

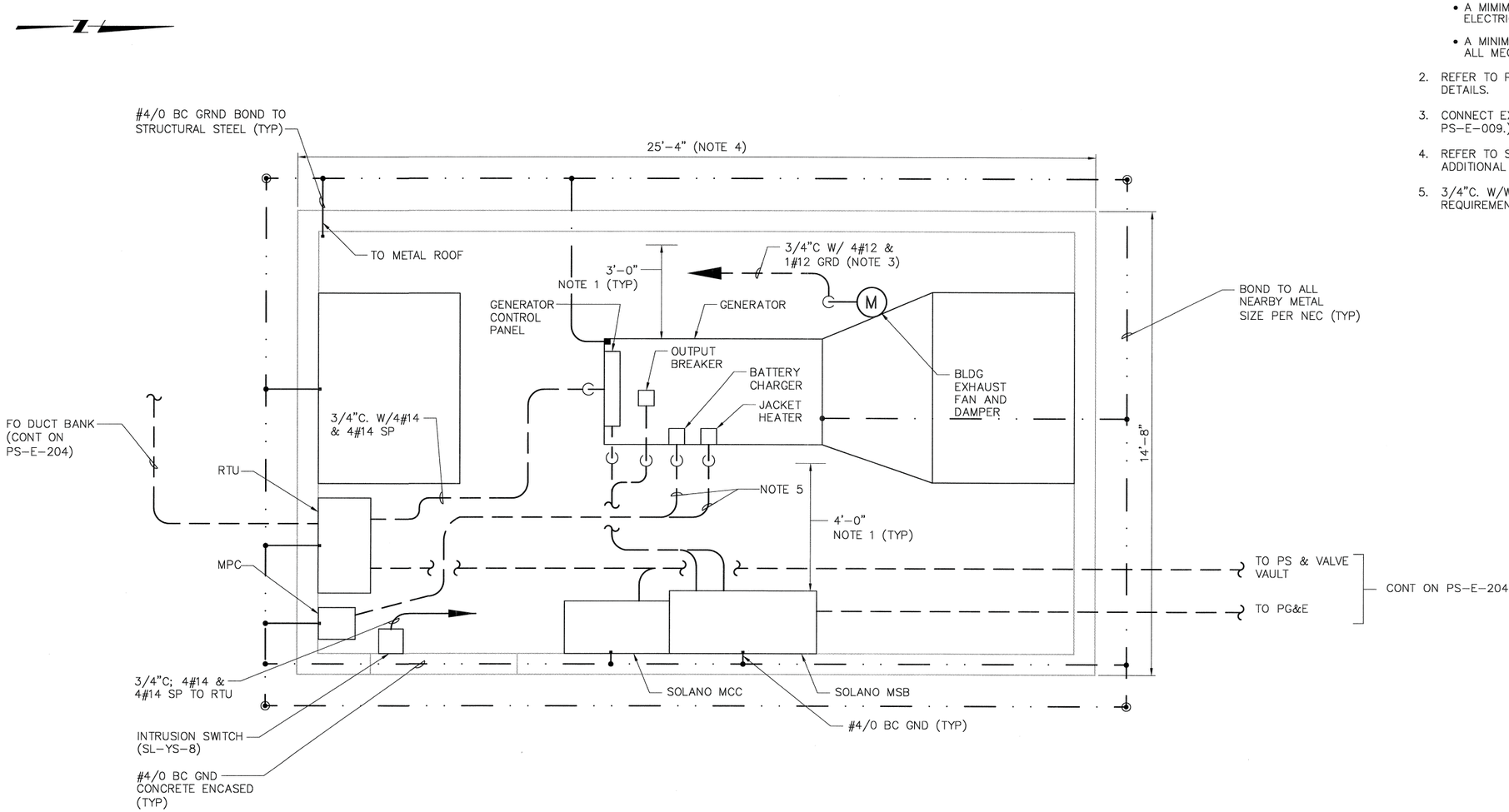

PLAN

1/2" = 1'- 0"

1 0 1 2

NOTES:

1. THE ELECTRICAL AND MECHANICAL EQUIPMENT IS SHOWN IN GENERAL LOCATION ONLY. THE CONTRACTOR SHALL DETERMINE THE EXACT LOCATION OF EQUIPMENT BASED ON THE EQUIPMENT FURNISHED AS REQUIRED TO MAINTAIN THE FOLLOWING MINIMUM CLEARANCES:
   - A MIMIMUM 4'-0" WORKING CLEARANCE IN FRONT OF ALL ELECTRICAL EQUIPMENT.
   - A MINIMUM 3'-0" MAINTENANCE ACCESS CLEARANCE AROUND ALL MECHANICAL EQUIPMENT.
2. REFER TO PS-E-009 FOR LIGHTING AND FIRE DETECTION DETAILS.
3. CONNECT EXHAUST FAN TO MPC VIA ATC. (REFER TO SHEET PS-E-009.)
4. REFER TO STRUCTURAL AND MECHANICAL DRAWINGS FOR ADDITIONAL BUILDING DETAILS.
5. 3/4"C. W/WIRES PER GENERATOR MANUFACTURER'S REQUIREMENTS

©2012 CDM SMITH ALL RIGHTS RESERVED.
REUSE OF DOCUMENTS: THESE DOCUMENTS AND DESIGNS PROVIDED BY PROFESSIONAL SERVICE, INCORPORATED HEREIN, ARE THE PROPERTY OF CDM SMITH AND ARE NOT TO BE USED, IN WHOLE OR PART, FOR ANY OTHER PROJECT WITHOUT THE WRITTEN AUTHORIZATION OF CDM SMITH.
N:\ACAD2008\los osos\01-sheets\PS\08-ELE\ PS-E-209 04/23/12 14:23 rushma XREFS: LosOsos-bdr, Ca-cal, X-ELEC-BUILDING

REV. NO.	DATE	DRWN	CHKD	REMARKS

DESIGNED BY: CAL
DRAWN BY: JAW
CHECKED BY: GNM
DATE: APRIL 2012

CDM Smith
2295 Gateway Oaks Drive, Suite 240
Sacramento, CA 95833
Tel: (916) 567-9900

0 1/2 1
IF THIS BAR DOES NOT MEASURE 1" THEN ADJUST SCALE ACCORDINGLY

REGISTERED PROFESSIONAL ENGINEER CHARLES A. LINDQUIST II No. E 8841 Exp. 3/31/2014 4/24/12 ELECTRICAL STATE OF CALIFORNIA

DIGALERT
DIAL TOLL FREE 1-800-642-2444
AT LEAST TWO DAYS BEFORE YOU DIG
UNDERGROUND SERVICE ALERT OF NORTHERN CALIFORNIA

LOS OSOS WASTEWATER COLLECTION SYSTEM
ELECTRICAL
SOLANO STANDBY POWER BUILDING
POWER, INSTRUMENTATION, & GRD PLAN

PROJECT NO.42502-83120
FILE NAME: PS-E-209
SHEET NO.
PS-E-209

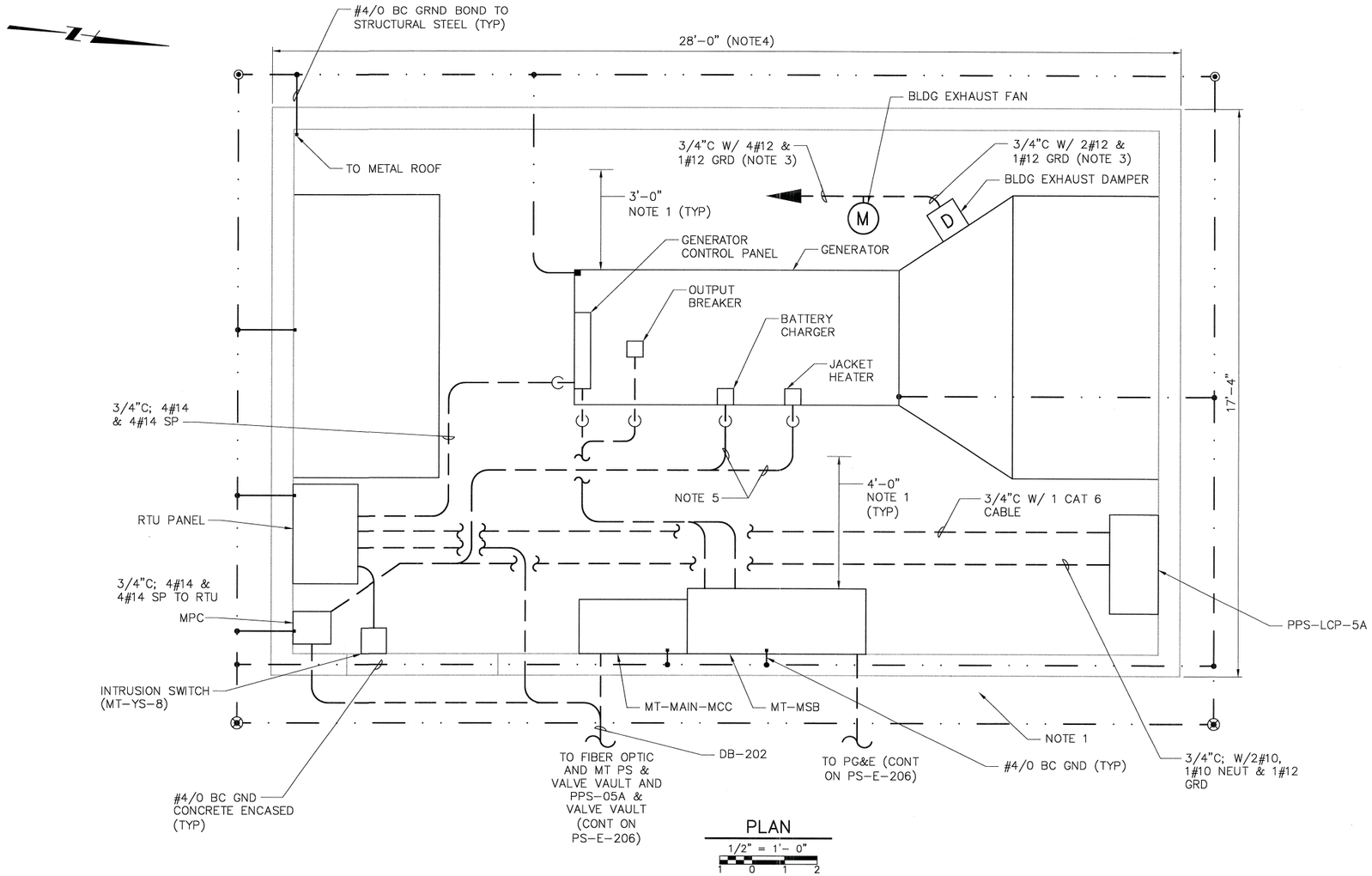

PLAN

1/2" = 1'- 0"

1 0 1 2

NOTES:

1. THE ELECTRICAL AND MECHANICAL EQUIPMENT IS SHOWN IN GENERAL LOCATION ONLY. THE CONTRACTOR SHALL DETERMINE THE EXACT LOCATION OF EQUIPMENT BASED ON THE EQUIPMENT FURNISHED AS REQUIRED TO MAINTAIN THE FOLLOWING MINIMUM CLEARANCES:
   - A MINIMUM 4'-0" WORKING CLEARANCE IN FRONT OF ALL ELECTRICAL EQUIPMENT.
   - A MINIMUM OF 3'-0" MAINTENANCE ACCESS CLEARANCE AROUND ALL MECHANICAL EQUIPMENT.
2. REFER TO SHEET PS-E-009 FOR LIGHTING AND FIRE DETECTION DETAILS.
3. CONNECT EXHAUST FAN TO MPC VIA ATC. (REFER TO SHEET PS-E-009.)
4. REFER TO STRUCTURAL AND MECHANICAL DRAWINGS FOR ADDITIONAL BUILDING DETAILS.
5. 3/4"C. W/WIRES PER GENERATOR MANUFACTURER'S REQUIREMENTS.

REV. NO.	DATE	DRWN	CHKD	REMARKS

DESIGNED BY: CAL
DRAWN BY: JAW
CHECKED BY: GNM
DATE: APRIL 2012

CDM Smith
2295 Gateway Oaks Drive, Suite 240
Sacramento, CA 95833
Tel: (916) 567-9900

0 1/2 1
IF THIS BAR DOES NOT MEASURE 1" THEN ADJUST SCALE ACCORDINGLY

REGISTERED PROFESSIONAL ENGINEER CHARLES M. LINDSHEIMER No. E 8841 Exp. 3/31/2014 ELECTRICAL STATE OF CALIFORNIA

DIGALERT
DIAL TOLL FREE 1-800-642-2444
AT LEAST TWO DAYS BEFORE YOU DIG
UNDERGROUND SERVICE ALERT OF NORTHERN CALIFORNIA

LOS OSOS WASTEWATER COLLECTION SYSTEM

ELECTRICAL MID-TOWN STANDBY POWER BUILDING POWER, INSTRUMENTATION, & GROUNDING PLAN

PROJECT NO.42502-83120
FILE NAME: PS-E-210
SHEET NO.
PS-E-210

©2012 CDM SMITH ALL RIGHTS RESERVED.
REUSE OF DOCUMENTS: THESE DOCUMENTS AND DESIGNS PROVIDED BY PROFESSIONAL SERVICE, INCORPORATED HEREIN, ARE THE PROPERTY OF CDM SMITH. AND ARE NOT TO BE USED, IN WHOLE OR PART, FOR ANY OTHER PROJECT WITHOUT THE WRITTEN AUTHORIZATION OF CDM SMITH.
N:\ACAD2008\los osos\01-sheets\PS\06-ELE\ PS-E-210 04/23/12 14:12 rustmo XREFS: LosOsos-bdr, Ca-col, X-ELEC-BUILDING

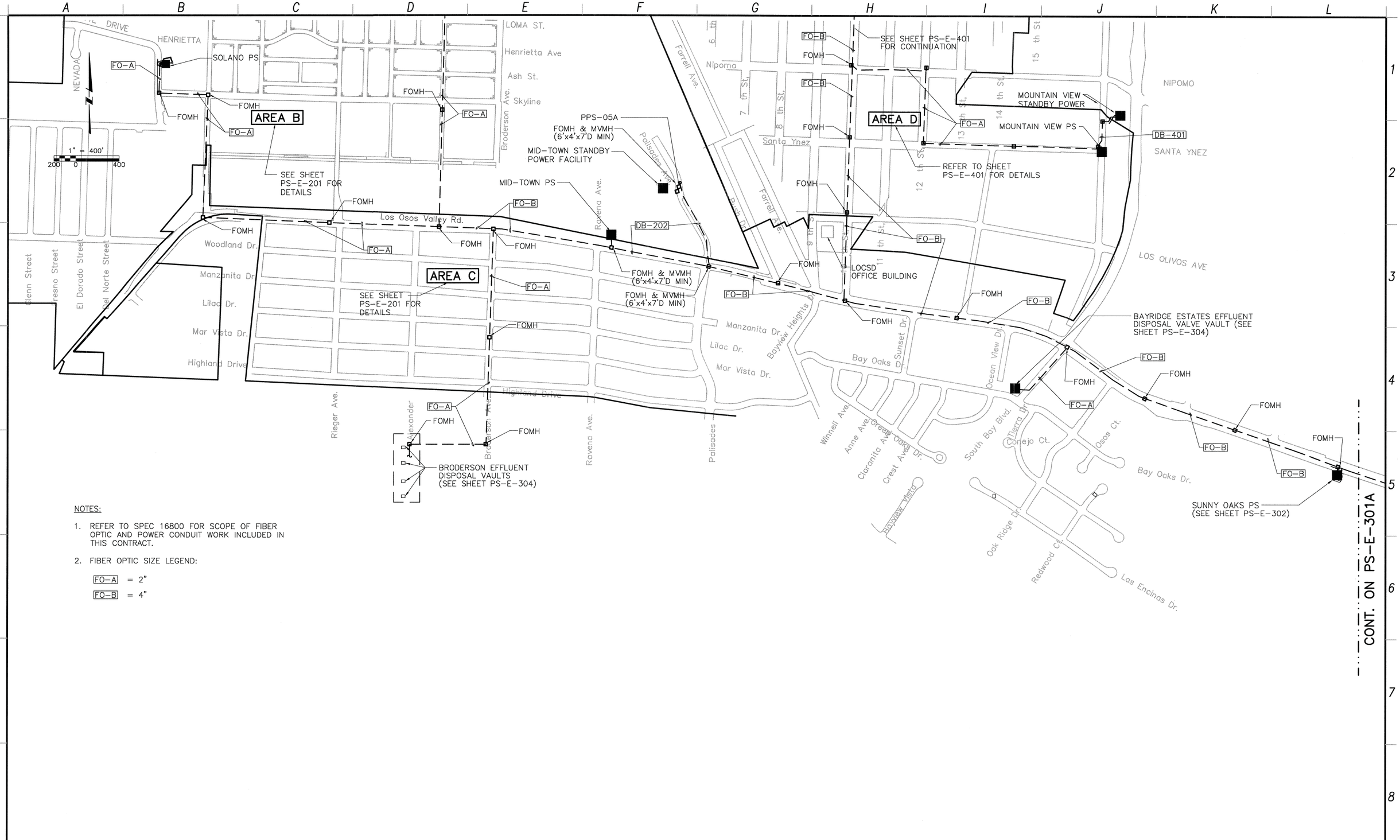

NOTES:

1. REFER TO SPEC 16800 FOR SCOPE OF FIBER OPTIC AND POWER CONDUIT WORK INCLUDED IN THIS CONTRACT.
2. FIBER OPTIC SIZE LEGEND:

   FO-A = 2"

   FO-B = 4"

REV. NO.	DATE	DRWN	CHKD	REMARKS

DESIGNED BY: CAL
DRAWN BY: WKT
CHECKED BY: GNM
DATE: APRIL 2012

CDM Smith
2295 Gateway Oaks Drive, Suite 240
Sacramento, CA 95833
Tel: (916) 567-9900

0 1/2 1
IF THIS BAR DOES NOT MEASURE 1" THEN ADJUST SCALE ACCORDINGLY

REGISTERED PROFESSIONAL ENGINEER
CHARLES M. LAMBERT II
No. E 8841
Exp. 3/31/2014
4/24/12
ELECTRICAL
STATE OF CALIFORNIA

DIGALERT
DIAL TOLL FREE 1-800-642-2444
AT LEAST TWO DAYS BEFORE YOU DIG
UNDERGROUND SERVICE ALERT OF NORTHERN CALIFORNIA

LOS OSOS WASTEWATER COLLECTION SYSTEM

ELECTRICAL GENERAL AREA PLAN AREA C – SHEET 1 OF 2

PROJECT NO. 42502-83120
FILE NAME: PS-E-301
SHEET NO.
PS-E-301

©2012 CDM SMITH ALL RIGHTS RESERVED.
REUSE OF DOCUMENTS: THESE DOCUMENTS AND DESIGNS PROVIDED BY PROFESSIONAL SERVICE, INCORPORATED HEREIN, ARE THE PROPERTY OF CDM SMITH AND ARE NOT TO BE USED, IN WHOLE OR PART, FOR ANY OTHER PROJECT WITHOUT THE WRITTEN AUTHORIZATION OF CDM SMITH.
N:\ACAD2008\los osos\01-sheets\PS\08-ELE\ PS-E-301 04/18/12 16:06 rushma XREFS: x-feat-row, loc_mdl, LosOsos-bdr, Ca-cal, FIBER-OPTIC-keyplan, AREA-C-MIDTOWN-PS, X-PS-E-FO-03

©2012 CDM SMITH ALL RIGHTS RESERVED.
REUSE OF DOCUMENTS: THESE DOCUMENTS AND DESIGNS PROVIDED BY PROFESSIONAL SERVICE, INCORPORATED HEREIN, ARE THE PROPERTY OF CDM SMITH AND ARE NOT TO BE USED, IN WHOLE OR PART, FOR ANY OTHER PROJECT WITHOUT THE WRITTEN AUTHORIZATION OF CDM SMITH.
N:\ACAD2008\los osos\01-sheets\PS\08-ELE\ PS-E-301A 04/11/12 15:59 weinerja XREFS: x-feat-row, loc_mdl, LosOsos-bdr, Ca-cal, FIBER-OPTIC-keyplan, AREA-C-MIDTOWN-PS, X-PS-E-FO-03, X-FEAT-APN

NOTES:

1. REFER TO SPEC 16800 FOR SCOPE OF FIBER OPTIC WORK INCLUDED IN THIS CONTRACT.
2. FIBER OPTIC SIZE LEGEND:
   - FO-A = 2"
   - FO-B = 4"
3. EXPOSED GALVANIZED STEEL CONDUIT FOR BRIDGE CROSSING. REFER TO STRUCTURAL DRAWINGS FOR CONDUIT MOUNTING DETAILS.
4. PROJECT INTERFACE POINT. CONTINUED TO WWTP UNDER SEPARATE PROJECT.

REV. NO.	DATE	DRWN	CHKD	REMARKS

DESIGNED BY: CAL
DRAWN BY: WKT
CHECKED BY: GNM
DATE: APRIL 2012

CDM Smith
2295 Gateway Oaks Drive, Suite 240
Sacramento, CA 95833
Tel: (916) 567-9900

0 1/2 1
IF THIS BAR DOES NOT MEASURE 1" THEN ADJUST SCALE ACCORDINGLY

REGISTERED PROFESSIONAL ENGINEER CHARLES A. LINDQUIST II Nov. 8 1941 Exp. 3/31/2014 ELECTRICAL STATE OF CALIFORNIA

DIGALERT
DIAL TOLL FREE 1-800-642-2444
AT LEAST TWO DAYS BEFORE YOU DIG
UNDERGROUND SERVICE ALERT OF NORTHERN CALIFORNIA

LOS OSOS WASTEWATER COLLECTION SYSTEM
ELECTRICAL
GENERAL AREA PLAN
AREA C – SHEET 2 OF 2

PROJECT NO. 42502-83120
FILE NAME: PS-E-301A
SHEET NO.
PS-E-301A

NOTES:

1. PG&E SERVICE: CONTRACTOR SHALL FURNISH, INSTALL AND COORDINATE ALL WORK INCLUDING AS A MINIMUM THE FOLLOWING:
   - SERVICE POLE RISER CONDUIT
   - SECONDARY CONDUIT: 1 – 3" C WITH PULL ROPE
   - OBTAIN PG&E APPROVAL PRIOR TO CONSTRUCTION
   - ALL WORK AND MATERIAL SHALL BE PER PG&E REQUIREMENTS
2. POWER/CONTROL DUCTBANK SHALL CONTAIN:
   - (2)[1"C. W/3#12, & 1#12 GRD]
   - (1)[1"C. W/12#14, 6#14 SPARE & 1#14 GRD]

   SIGNAL DUCTBANK SHALL CONTAIN:
   - [1"C. (1)2/ C #16 SHLD & (1)2/ C #16 SHLD SPARE] (OR AS REQUIRED FOR SO–LE–4 FURNISHED.)

   CONTRACTOR SHALL MAINTAIN 12" SEPARATION BETWEEN DUCTBANKS.
3. CONTROL DUCTBANK SHALL CONTAIN:
   - (1)[1"C. W/2#14, 4#14 SPARE & 1#14 GRD]

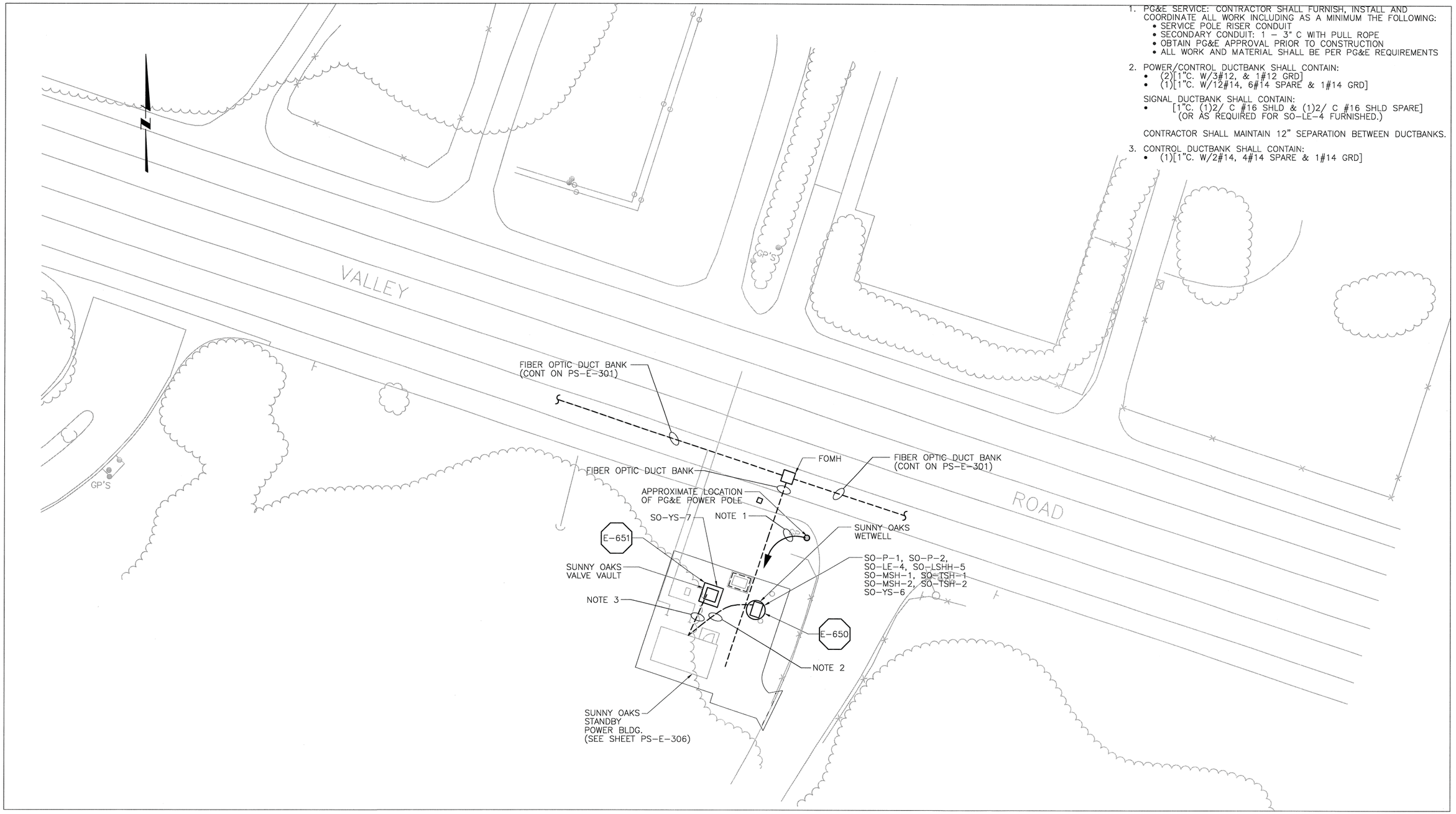

SUNNY OAKS SUBMERSIBLE PUMP STATION SITE POWER, LIGHTING & GROUNDING

PLAN

1" = 20'

10 0 20

REV. NO.	DATE	DRWN	CHKD	REMARKS

DESIGNED BY: CAL
DRAWN BY: JAW
CHECKED BY: GNM
DATE: APRIL 2012

CDM Smith
2295 Gateway Oaks Drive, Suite 240
Sacramento, CA 95833
Tel: (916) 567-9900

0 1/2 1
IF THIS BAR DOES NOT MEASURE 1" THEN ADJUST SCALE ACCORDINGLY

REGISTERED PROFESSIONAL ENGINEER CHARLES J. LINDQUIST III No. E 8841 Exp. 3/31/2014 ELECTRICAL STATE OF CALIFORNIA

DIGALERT
DIAL TOLL FREE 1-800-642-2444
AT LEAST TWO DAYS BEFORE YOU DIG
UNDERGROUND SERVICE ALERT OF NORTHERN CALIFORNIA

LOS OSOS WASTEWATER COLLECTION SYSTEM
ELECTRICAL
SUNNY OAKS SUBMERSIBLE PUMP STATION SITE
ELECTRICAL POWER PLAN

PROJECT NO.42502–83120
FILE NAME: PS–E–302
SHEET NO.
PS–E–302

©2012 CDM SMITH ALL RIGHTS RESERVED.
REUSE OF DOCUMENTS: THESE DOCUMENTS AND DESIGNS PROVIDED BY PROFESSIONAL SERVICE, INCORPORATED HEREIN, ARE THE PROPERTY OF CDM SMITH AND ARE NOT TO BE USED, IN WHOLE OR PART, FOR ANY OTHER PROJECT WITHOUT THE WRITTEN AUTHORIZATION OF CDM SMITH.
N:\ACAD2008\los osos\01-sheets\PS\08-ELE\ PS-E-302 04/18/12 10:35 talbotwk XREFS: x-fed1-deri-sou, loc_mdl, LosOsos-bdr, Ca-cal

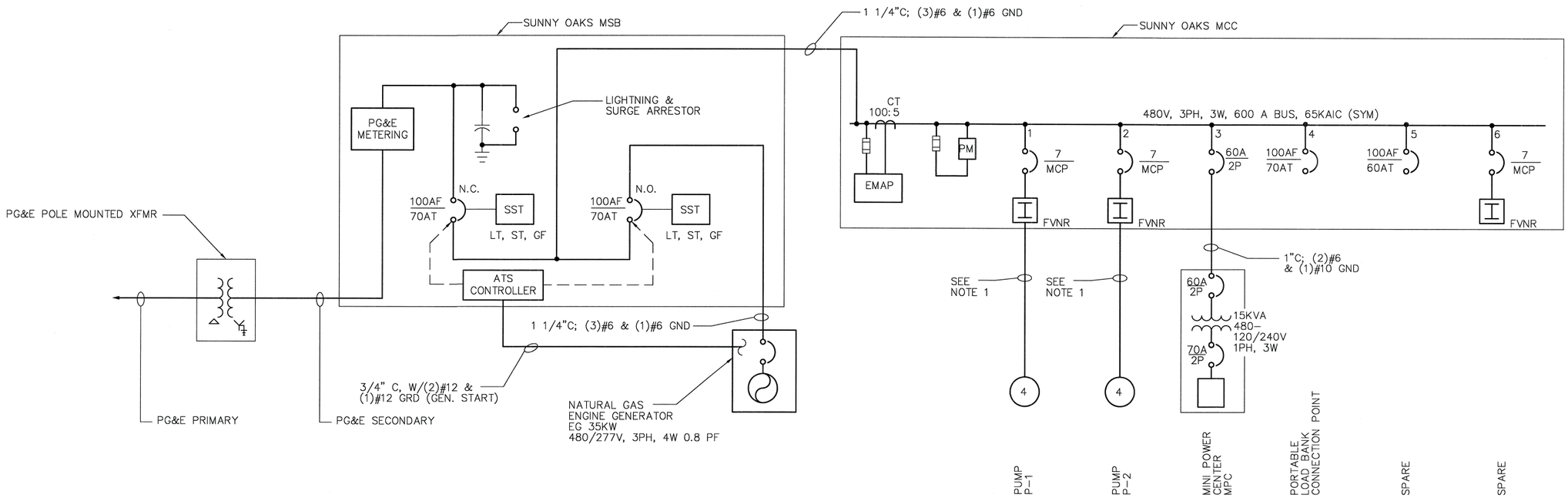

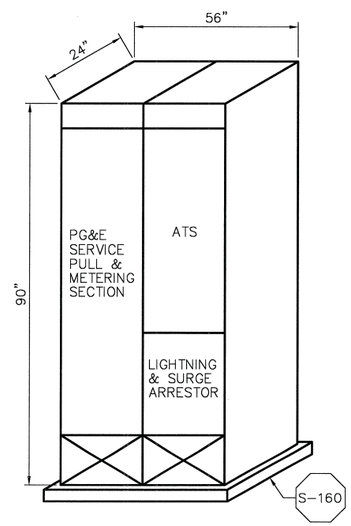

SUNNY OAKS MSB

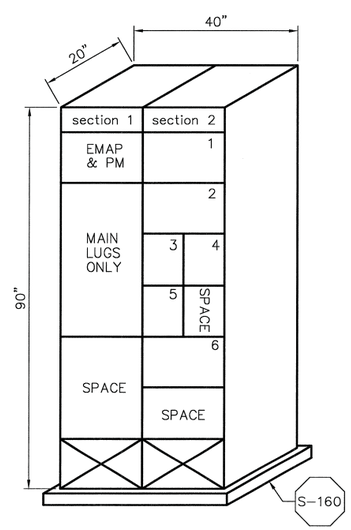

SUNNY OAKS MCC

NOTES:

1. SEE SHEET PS-E-302 FOR CONDUIT AND WIRE SIZES

	SUNNY OAKS			
	LOAD		AMPS @ 480V, 3P	
ITEM	KVA	HP	CONNECTED	DEMAND
P- 1	--	4	7.6	5
P- 2	--	4	7.6	5
MPC	15	--	31	21
TOTAL	--	--	46	32

REV. NO.	DATE	DRWN	CHKD	REMARKS

DESIGNED BY: CAL
DRAWN BY: JAW
CHECKED BY: GNM
DATE: APRIL 2012

CDM Smith
2295 Gateway Oaks Drive, Suite 240
Sacramento, CA 95833
Tel: (916) 567-9900

0 1/2 1
IF THIS BAR DOES NOT MEASURE 1" THEN ADJUST SCALE ACCORDINGLY

REGISTERED PROFESSIONAL ENGINEER CHARLES A. LINDQUIST II No. E 8641 Exp. 3/31/2014 ELECTRICAL STATE OF CALIFORNIA

DIGALERT
DIAL TOLL FREE 1-800-642-2444 AT LEAST TWO DAYS BEFORE YOU DIG
UNDERGROUND SERVICE ALERT OF NORTHERN CALIFORNIA

LOS OSOS WASTEWATER COLLECTION SYSTEM
ELECTRICAL
SUNNY OAKS PS & STANDBY POWER
SINGLE LINE

PROJECT NO.42502-83120
FILE NAME: PS-E-303
SHEET NO.
PS-E-303

©2012 CDM SMITH ALL RIGHTS RESERVED.
REUSE OF DOCUMENTS: THESE DOCUMENTS AND DESIGNS PROVIDED BY PROFESSIONAL SERVICE, INCORPORATED HEREIN, ARE THE PROPERTY OF CDM SMITH AND ARE NOT TO BE USED, IN WHOLE OR PART, FOR ANY OTHER PROJECT WITHOUT THE WRITTEN AUTHORIZATION OF CDM SMITH.
N:\ACAD2008\los osos\01-sheets\PS\08-ELE\ PS-E-303 04/20/12 17:40 rushma XREFS: LosOsos-bdr, Co-cal

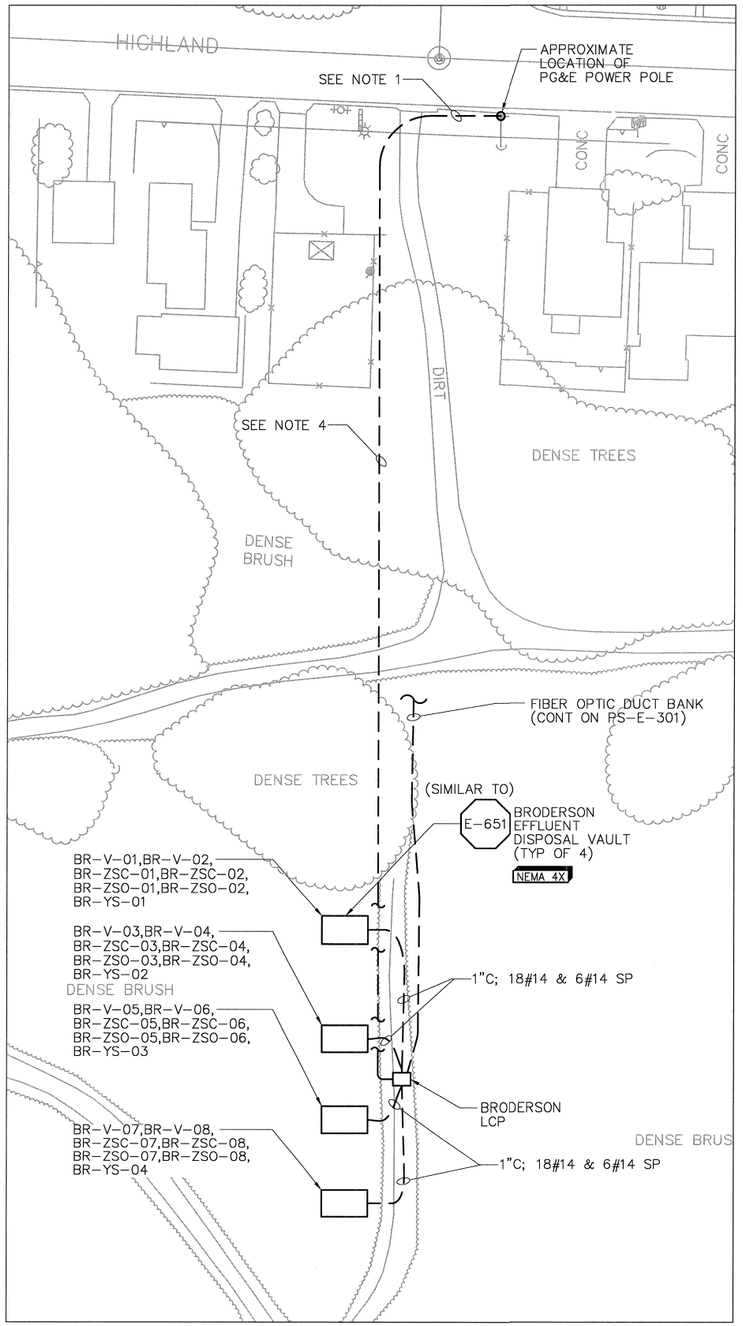

BRODERSON EFFLUENT DISPOSAL SIGHT

PLAN

1" = 30'

15 0 30

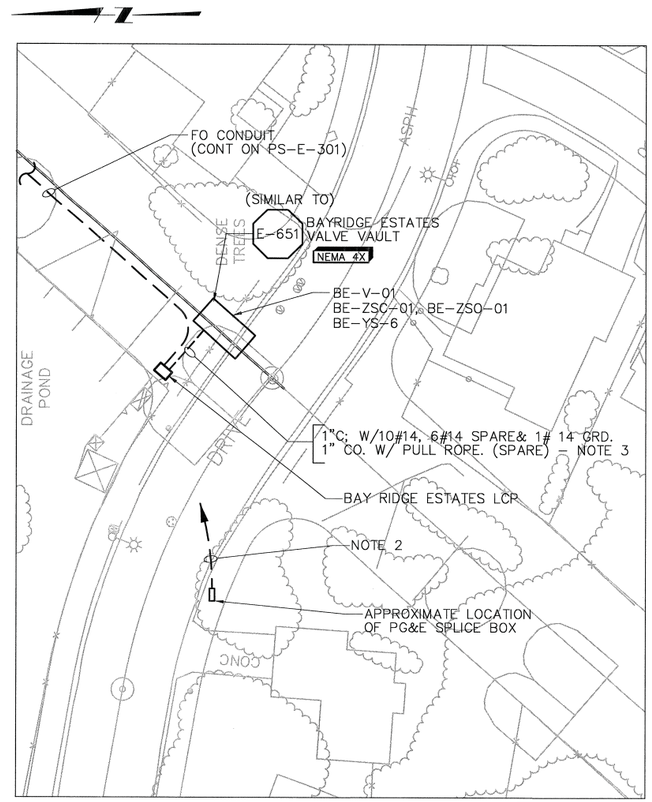

BAYRIDGE ESTATES

PLAN

1" = 30'

15 0 30

NOTES:

1. BRODERSON EDS PG&E SERVICE: CONTRACTOR SHALL FURNISH, INSTALL AND COORDINATE ALL WORK INCLUDING AS A MINIMUM THE FOLLOWING:
   - SERVICE POLE RISER CONDUIT
   - SECONDARY CONDUIT: 1 – 3" C WITH PULL ROPE
   - OBTAIN PG&E APPROVAL PRIOR TO CONSTRUCTION
   - ALL WORK AND MATERIAL SHALL BE PER PG&E REQUIREMENTS
2. BAYRIDGE ESTATES EDS PG&E SERVICE: CONTRACTOR SHALL FURNISH, INSTALL AND COORDINATE ALL WORK INCLUDING AS A MINIMUM THE FOLLOWING:
   - CONNECT TO EXISTING PG&E SPICE BOX
   - SECONDARY CONDUIT: 1 – 3" C WITH PULL ROPE
   - OBTAIN PG&E APPROVAL PRIOR TO CONSTRUCTION
   - ALL WORK AND MATERIAL SHALL BE PER PG&E REQUIREMENTS
3. SPARE CONDUIT FROM BAYRIDGE ESTATES LCP TO VALVE VAULT. TERMINATE SPARE CONDUIT INSIDE VAULT IN 4"X4"X4" BOX.
4. INSTALL PG&E SERVICE CONDUIT WITHIN EASEMENT DESIGNATED BY COUNTY.

REV. NO.	DATE	DRWN	CHKD	REMARKS

DESIGNED BY: CAL
DRAWN BY: JAW
CHECKED BY: GNM
DATE: APRIL 2012

CDM Smith
2295 Gateway Oaks Drive, Suite 240
Sacramento, CA 95833
Tel: (916) 567-9900

0 1/2 1
IF THIS BAR DOES NOT MEASURE 1" THEN ADJUST SCALE ACCORDINGLY

REGISTERED PROFESSIONAL ENGINEER CHARLES A. LANDRUST III No. E 8841 Exp. 3/31/2014 ELECTRICAL STATE OF CALIFORNIA

DIGALERT
DIAL TOLL FREE 1-800-642-2444
AT LEAST TWO DAYS BEFORE YOU DIG
UNDERGROUND SERVICE ALERT OF NORTHERN CALIFORNIA

LOS OSOS WASTEWATER COLLECTION SYSTEM
ELECTRICAL
BRODERSON & BAYRIDGE ESTATES
EFFLUENT DISPOSAL VAULTS
SITE PLAN

PROJECT NO.42502-83120
FILE NAME: PS-E-304
SHEET NO.
PS-E-304

©2012 CDM SMITH ALL RIGHTS RESERVED.
REUSE OF DOCUMENTS: THESE DOCUMENTS AND DESIGNS PROVIDED BY PROFESSIONAL SERVICE, INCORPORATED HEREIN, ARE THE PROPERTY OF CDM SMITH AND ARE NOT TO BE USED, IN WHOLE OR PART, FOR ANY OTHER PROJECT WITHOUT THE WRITTEN AUTHORIZATION OF CDM SMITH.
N:\ACAD2008\los osos\01-sheets\PS\08-ELE\ PS-E-304 04/20/12 16:13 talbotwk XREFS: x-feat-aerl-sou, LosOsos-bdr, Ca-cal, N-REW-ALIGNMENT, X-UTIL-WATR, N-UTIL-SS, x-util-all, x-feat-row-D, x-feat-aerl-D, x-feat-addr-D, x-feat-topo-supp, FIB

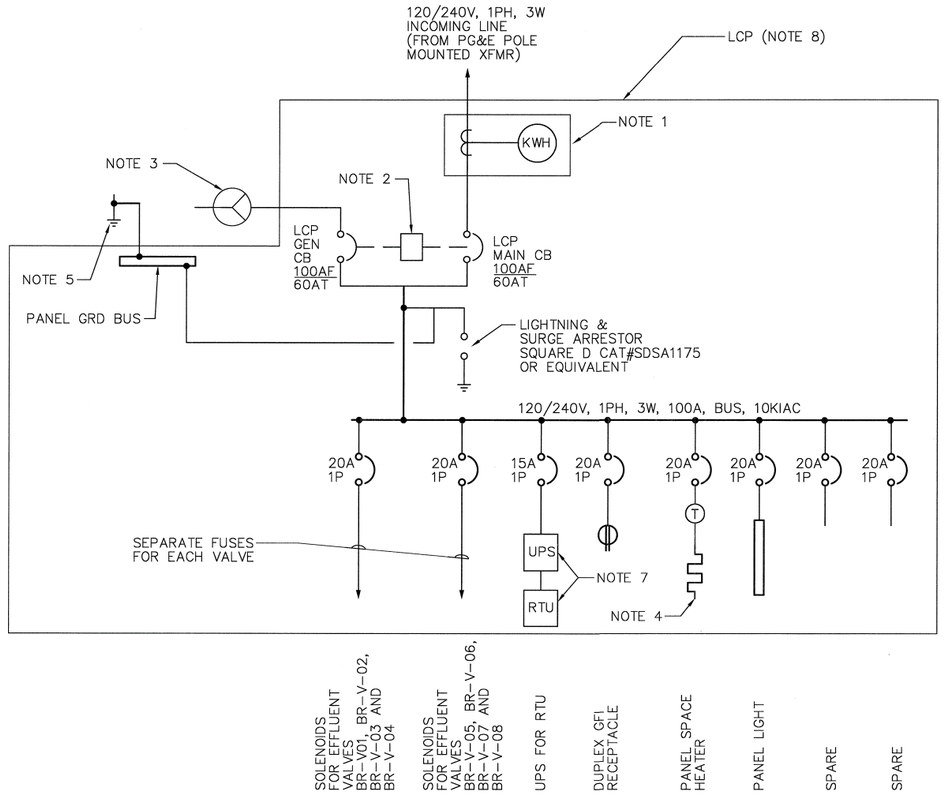

EFFLUENT DISPOSAL AND RECLAIM WATER SINGLE LINE DIAGRAM (TYP)(NOTE 9)

EFFLUENT DISPOSAL	ENCLOSURE	RTU	AREA
BAYRIDGE ESTATES	BE-LCP	RTU-BE	C
BRODERSON	BR-LCP	RTU-BR	C

NOTES:

1. METERING DEVICE MOUNTED IN ENCLOSURE, COMPLETE WITH METER, METER SOCKET, AND TEST BY-PASS SWITCHES SHALL BE IN COMPLIANCE WITH PG&E.
2. MECHANICAL OR KEY INTERLOCK TO ALLOW ONLY ONE BREAKER TO BE CLOSED AT ONCE.
3. 100A, 4 POLE, 600V, HEAVY DUTY WEATHERPROOF RECEPTACLE SHALL BE PROVIDED AND INSTALLED ON THE EXTERIOR OF THE LCP ENCLOSURE. RECEPTACLE SHALL BE APPLETON STYLE 2 REVERSE SERVICE CAT. NO. ADJA1034-200-RS WITH BACK BOX, ANGLE ADAPTER, SPRING COVER, AND MATCHING PLUGS.
4. ANTICONDENSATION SPACE HEATER, RATED FOR 500 WATTS 240V AND OPERATED AT 125 WATTS 120V. THERMOSTAT SHALL BE SET TO OPEN AT 60 DEGREES FAHRENHEIT.
5. ACCESSIBLE GROUND ROD FOR GENERATOR
6. INTRUSION ALARM SHALL BE INSTALLED AT EACH VAULT & AT LCP. CONNECT ALL YS SWITCHES IN PARALLEL FOR ONE PLC INPUT.
7. RTU & UPS PROVIDED BY INSTRUMENTATION SYSTEM SUPPLIER. REFER TO INSTRUMENTATION SPECIFICATIONS (13421) AND DRAWINGS FOR DETAILS.
8. REFER TO SPEC 13422 FOR ADDITIONAL LCP FABRICATION REQUIREMENTS.
9. BRODERSON LCP SHOWN. (BAYRIDGE ESTATES SIMILAR.)

LOCATION LEGEND:

1 FIELD
2 LCS
3 LCP
4 MCC
5 PLC

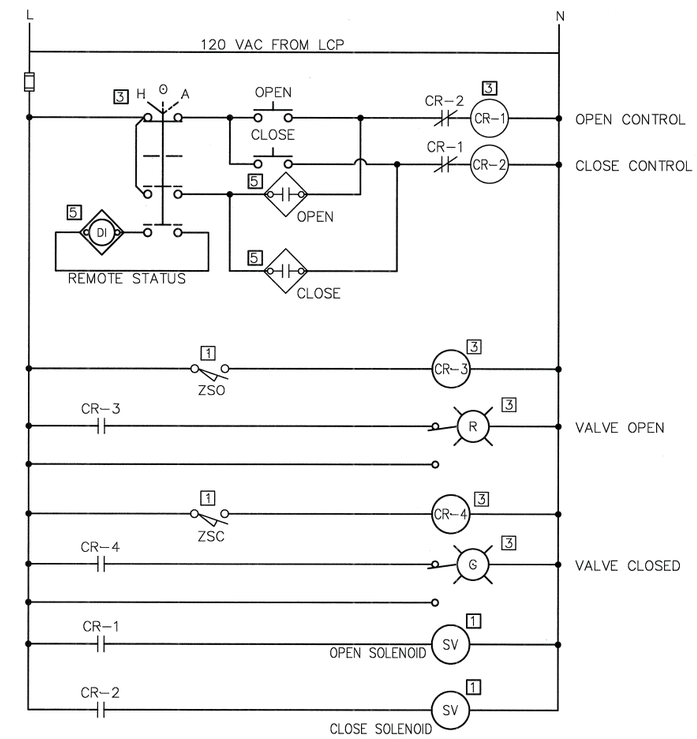

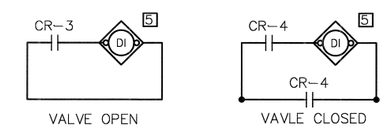

TYPICAL EFFLUENT DISPOSAL VALVE

(TYP FOR EACH VALVE)

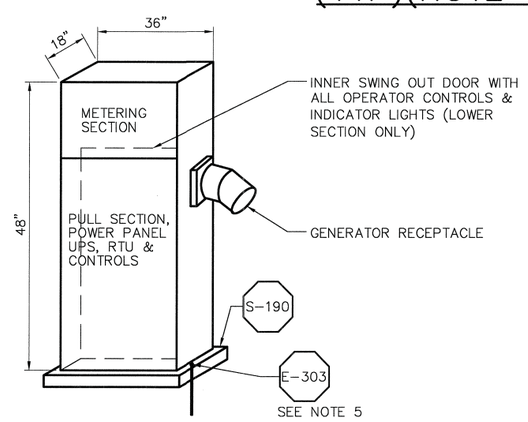

EFFLUENT DISPOSAL VAULT LCP ELEVATION (TYP)(NOTE 9)

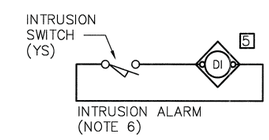

EFFLUENT DISPOSAL VAULT & LCP INTRUSION ALARM SYSTEM

(TYP FOR EACH WET WELL)

REV. NO.	DATE	DRWN	CHKD	REMARKS

DESIGNED BY: CAL
DRAWN BY: WKT
CHECKED BY: GNM
DATE: APRIL 2012

CDM Smith
2295 Gateway Oaks Drive, Suite 240
Sacramento, CA 95833
Tel: (916) 567-9900

IF THIS BAR DOES NOT MEASURE 1" THEN ADJUST SCALE ACCORDINGLY

REGISTERED PROFESSIONAL ENGINEER CHARLES A. LINDQUIST ELECTRICAL STATE OF CALIFORNIA

DIGALERT DIAL TOLL FREE 1-800-642-2444 AT LEAST TWO DAYS BEFORE YOU DIG
UNDERGROUND SERVICE ALERT OF NORTHERN CALIFORNIA

LOS OSOS WASTEWATER COLLECTION SYSTEM
ELECTRICAL
EFFLUENT DISPOSAL VAULTS
TYPICAL SINGLE LINE

PROJECT NO.42502-83120
FILE NAME: PS-E-305
SHEET NO.
PS-E-305

©2012 CDM SMITH ALL RIGHTS RESERVED.
REUSE OF DOCUMENTS: THESE DOCUMENTS AND DESIGNS PROVIDED BY PROFESSIONAL SERVICE, INCORPORATED HEREIN, ARE THE PROPERTY OF CDM SMITH. AND ARE NOT TO BE USED, IN WHOLE OR PART, FOR ANY OTHER PROJECT WITHOUT THE WRITTEN AUTHORIZATION OF CDM SMITH.
N:\ACAD2008\los osos\01-sheets\PS\08-ELE\ PS-E-305 04/23/12 12:53 weinerjo XREFS: 6EedSL, LosOsos-bdr, Ca-cal

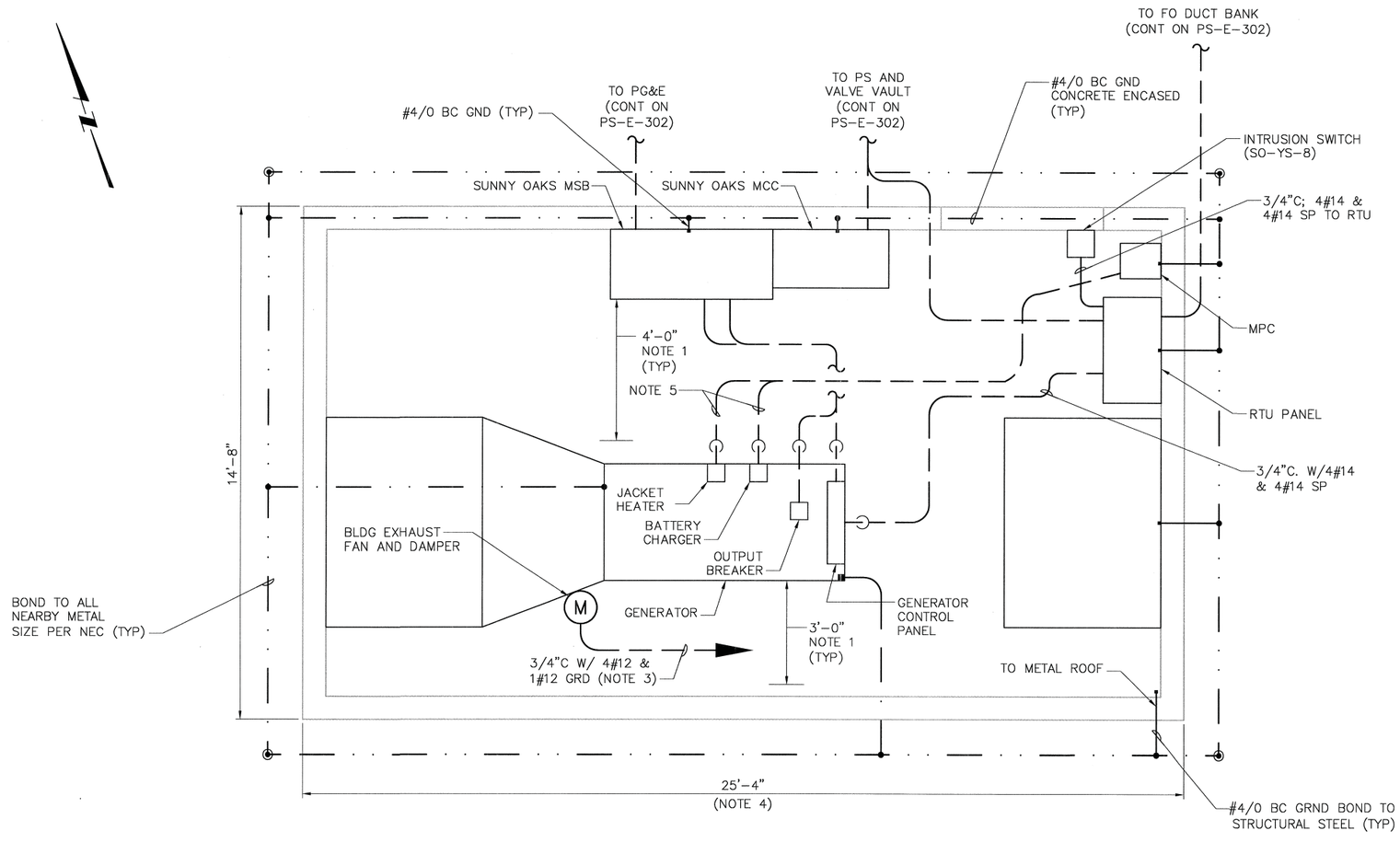

PLAN

SCALE: 1/2"=1'-0"

NOTES:

1. THE ELECTRICAL AND MECHANICAL EQUIPMENT IS SHOWN IN GENERAL LOCATION ONLY. THE CONTRACTOR SHALL DETERMINE THE EXACT LOCATION OF EQUIPMENT BASED ON THE EQUIPMENT FURNISHED AS REQUIRED TO MAINTAIN THE FOLLOWING MINIMUM CLEARANCES:
   - A MIMIMUM 4'-0" WORKING CLEARANCE IN FRONT OF ALL ELECTRICAL EQUIPMENT.
   - A MINIMUM 3'-0" MAINTENANCE ACCESS CLEARANCE AROUND ALL MECHANICAL EQUIPMENT.
2. REFER TO PS-E-009 FOR LIGHTING AND FIRE DETECTION DETAILS.
3. CONNECT EXHAUST FAN TO MPC VIA ATC. (REFER TO SHEET PS-E-009.)
4. REFER TO STRUCTURAL AND MECHANICAL DRAWINGS FOR ADDITIONAL BUILDING DETAILS.
5. 3/4"C. W/WIRES PER GENERATOR MANUFACTURER'S REQUIREMENTS

©2012 CDM SMITH ALL RIGHTS RESERVED.
REUSE OF DOCUMENTS: THESE DOCUMENTS AND DESIGNS PROVIDED BY PROFESSIONAL SERVICE, INCORPORATED HEREIN, ARE THE PROPERTY OF CDM SMITH AND ARE NOT TO BE USED, IN WHOLE OR PART, FOR ANY OTHER PROJECT WITHOUT THE WRITTEN AUTHORIZATION OF CDM SMITH.
N:\ACAD2008\los osos\01-sheets\PS\08-ELE\ PS-E-306 04/23/12 12:55 weinerja XREFS: LosOsos-bdr, Ca-cal, X-ELEC-BUILDING

REV. NO.	DATE	DRWN	CHKD	REMARKS

DESIGNED BY: CAL
DRAWN BY: JAW
CHECKED BY: GNM
DATE: APRIL 2012

CDM Smith
2295 Gateway Oaks Drive, Suite 240
Sacramento, CA 95833
Tel: (916) 567-9900

0 1/2 1
IF THIS BAR DOES NOT MEASURE 1" THEN ADJUST SCALE ACCORDINGLY

REGISTERED PROFESSIONAL ENGINEER CHARLES A. LINDQUIST III No. E 8841 Exp. 3/31/2014 4/24/12 ELECTRICAL STATE OF CALIFORNIA

DIGALERT
DIAL TOLL FREE 1-800-642-2444
AT LEAST TWO DAYS BEFORE YOU DIG
UNDERGROUND SERVICE ALERT OF NORTHERN CALIFORNIA

LOS OSOS WASTEWATER COLLECTION SYSTEM

ELECTRICAL SUNNY OAKS STANDBY POWER BUILDING POWER, INSTRUMENTATION, & GROUNDING PLAN

PROJECT NO.42502-83120
FILE NAME: PS-E-306
SHEET NO.
PS-E-306

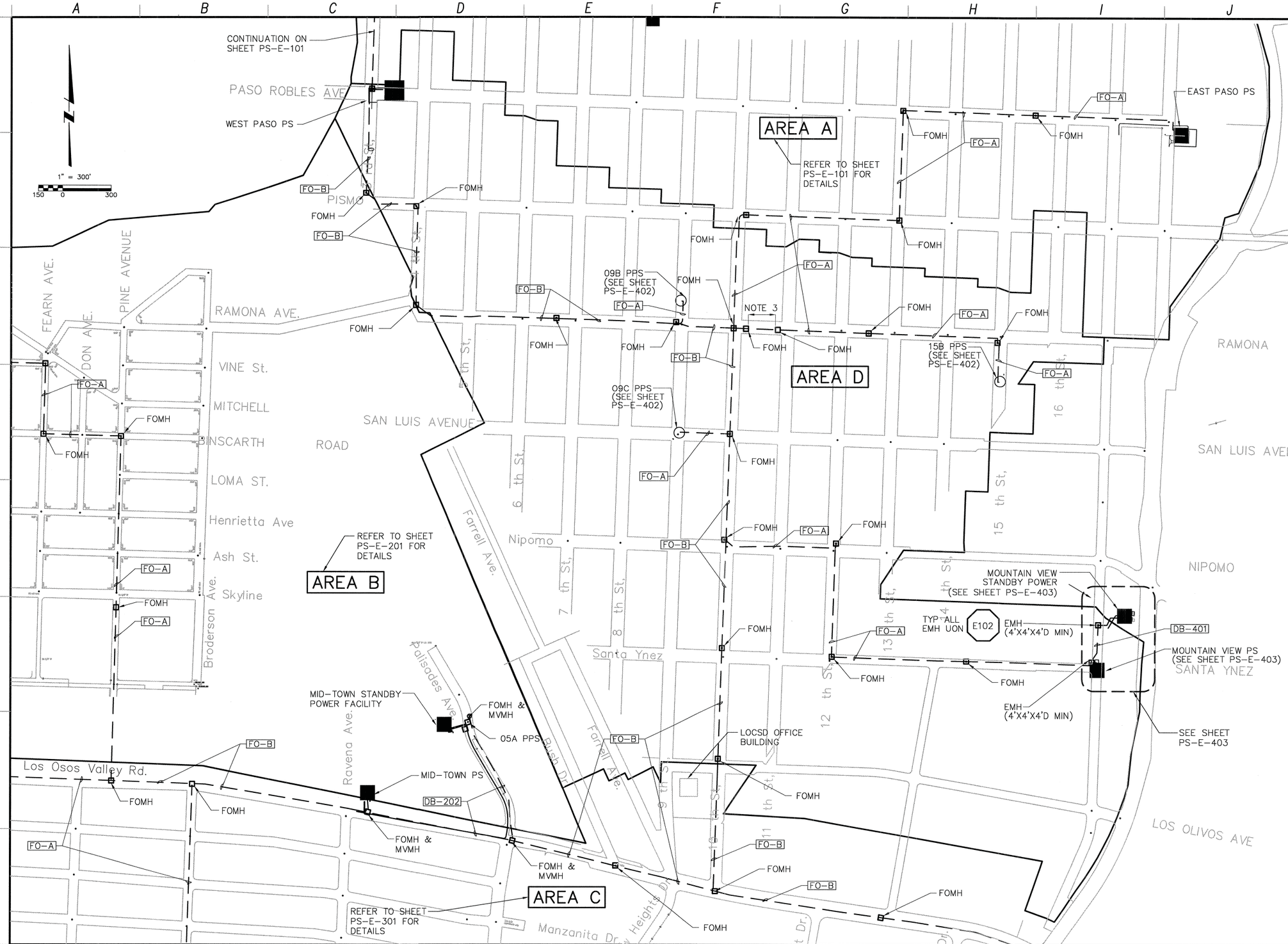

NOTES:

1. REFER TO SPEC 16800 FOR SCOPE OF FIBER OPTIC AND POWER CONDUIT WORK INCLUDED IN THIS CONTRACT.
2. FIBER OPTIC SIZE LEGEND:

   FO-A = 2"

   FO-B = 4"
3. BORE AND JACK INSTALLATION IN THIS AREA. TRANSITION TO RIGID STEEL CONDUIT WITHIN THE CASING PIPE.

REV. NO.	DATE	DRWN	CHKD	REMARKS

DESIGNED BY: CAL
DRAWN BY: WKT
CHECKED BY: GNM
DATE: APRIL 2012

CDM Smith
2295 Gateway Oaks Drive, Suite 240
Sacramento, CA 95833
Tel: (916) 567-9900

IF THIS BAR DOES NOT MEASURE 1" THEN ADJUST SCALE ACCORDINGLY

DIGALERT
DIAL TOLL FREE 1-800-642-2444
AT LEAST TWO DAYS BEFORE YOU DIG
UNDERGROUND SERVICE ALERT OF NORTHERN CALIFORNIA

LOS OSOS WASTEWATER COLLECTION SYSTEM

ELECTRICAL GENERAL AREA PLAN AREA D

PROJECT NO. 42502-83120
FILE NAME: PS-E-401
SHEET NO.
PS-E-401

©2012 CDM SMITH ALL RIGHTS RESERVED.
REUSE OF DOCUMENTS: THESE DOCUMENTS AND DESIGNS PROVIDED BY PROFESSIONAL SERVICE, INCORPORATED HEREIN, ARE THE PROPERTY OF CDM SMITH AND ARE NOT TO BE USED, IN WHOLE OR PART, FOR ANY OTHER PROJECT WITHOUT THE WRITTEN AUTHORIZATION OF CDM SMITH.
N:\ACAD2008\los osos\01-sheets\PS\08-ELE\ PS-E-401 04/11/12 11:30 weinerja XREFS: x-feat-row, loc_mdi, LosOsos-bdr, Ca-cal, FIBER-OPTIC-keyplan, AREA-C-MIDTOWN-PS, X-PS-E-FO-04

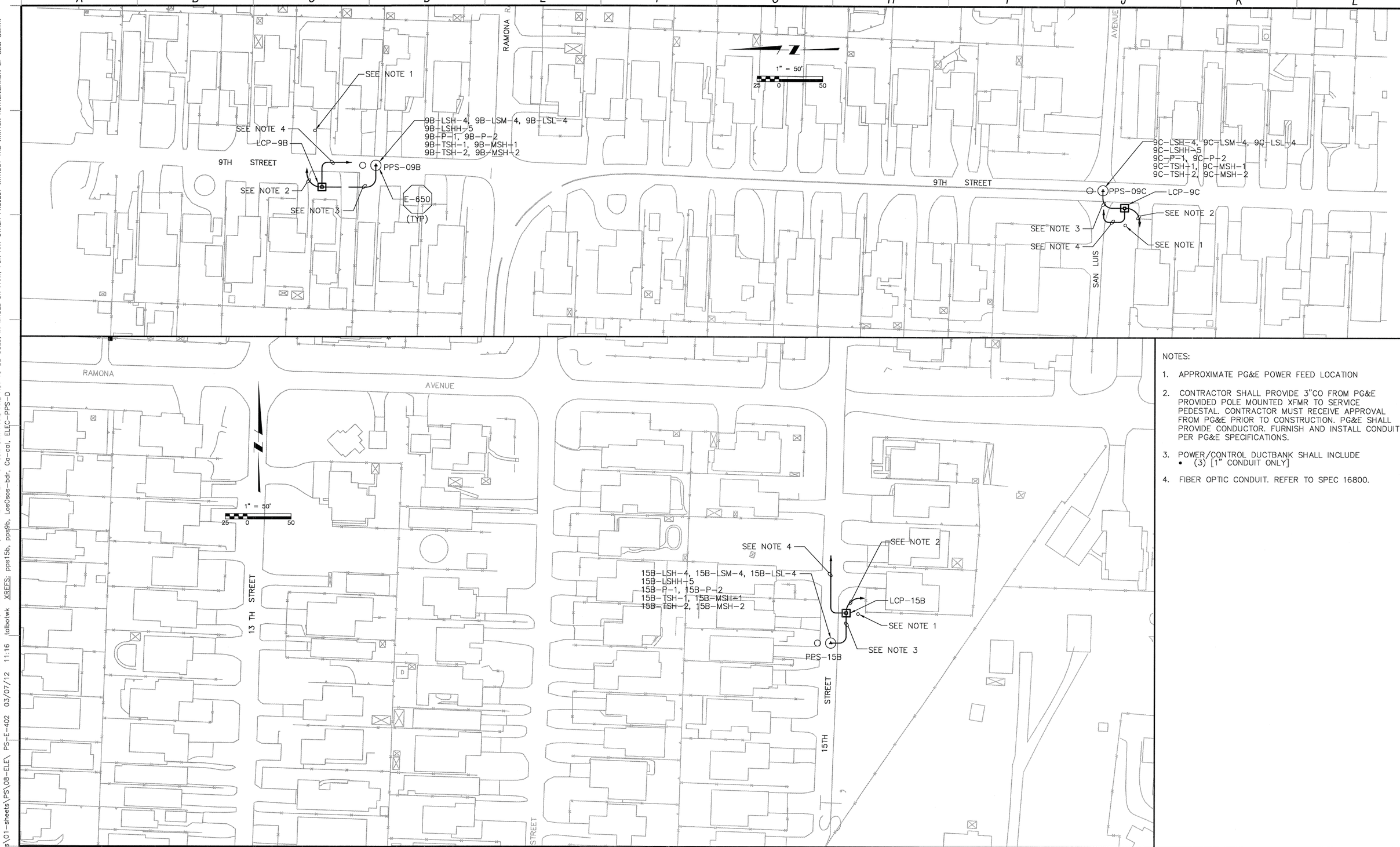

NOTES:

1. APPROXIMATE PG&E POWER FEED LOCATION
2. CONTRACTOR SHALL PROVIDE 3"CO FROM PG&E PROVIDED POLE MOUNTED XFMR TO SERVICE PEDESTAL. CONTRACTOR MUST RECEIVE APPROVAL FROM PG&E PRIOR TO CONSTRUCTION. PG&E SHALL PROVIDE CONDUCTOR. FURNISH AND INSTALL CONDUIT PER PG&E SPECIFICATIONS.
3. POWER/CONTROL DUCTBANK SHALL INCLUDE
   - (3) [1" CONDUIT ONLY]
4. FIBER OPTIC CONDUIT. REFER TO SPEC 16800.

REV. NO.	DATE	DRWN	CHKD	REMARKS

DESIGNED BY: CAL
DRAWN BY: JAW
CHECKED BY: GNM
DATE: APRIL 2012

CDM Smith
2295 Gateway Oaks Drive, Suite 240
Sacramento, CA 95833
Tel: (916) 567-9900

0 1/2 1
IF THIS BAR DOES NOT MEASURE 1" THEN ADJUST SCALE ACCORDINGLY

REGISTERED PROFESSIONAL ENGINEER
CHARLES M. FINANCIST II
No. E 8841
Exp. 3/31/2014
4/27/12
ELECTRICAL
STATE OF CALIFORNIA

DIGALERT
DIAL TOLL FREE
1-800-642-2444
AT LEAST TWO DAYS BEFORE YOU DIG
UNDERGROUND SERVICE ALERT OF NORTHERN CALIFORNIA

LOS OSOS WASTEWATER COLLECTION SYSTEM
ELECTRICAL
POCKET PUMP STATIONS
09B, 09C & 15B
ELECTRICAL SITE PLAN

PROJECT NO.42502-83120
FILE NAME: PS-E-402
SHEET NO.
PS-E-402

©2012 CDM SMITH ALL RIGHTS RESERVED.
REUSE OF DOCUMENTS: THESE DOCUMENTS AND DESIGNS PROVIDED BY PROFESSIONAL SERVICE, INCORPORATED HEREIN, ARE THE PROPERTY OF CDM SMITH AND ARE NOT TO BE USED, IN WHOLE OR PART, FOR ANY OTHER PROJECT WITHOUT THE WRITTEN AUTHORIZATION OF CDM SMITH.
N:\ACAD2008\los osos\01-sheets\PS\08-ELE\ PS-E-402 03/07/12 11:16 talbotwk XREFS: pps15b, pps9b, Los0sos-bdr, Ca-cal, ELEC-PPS-D

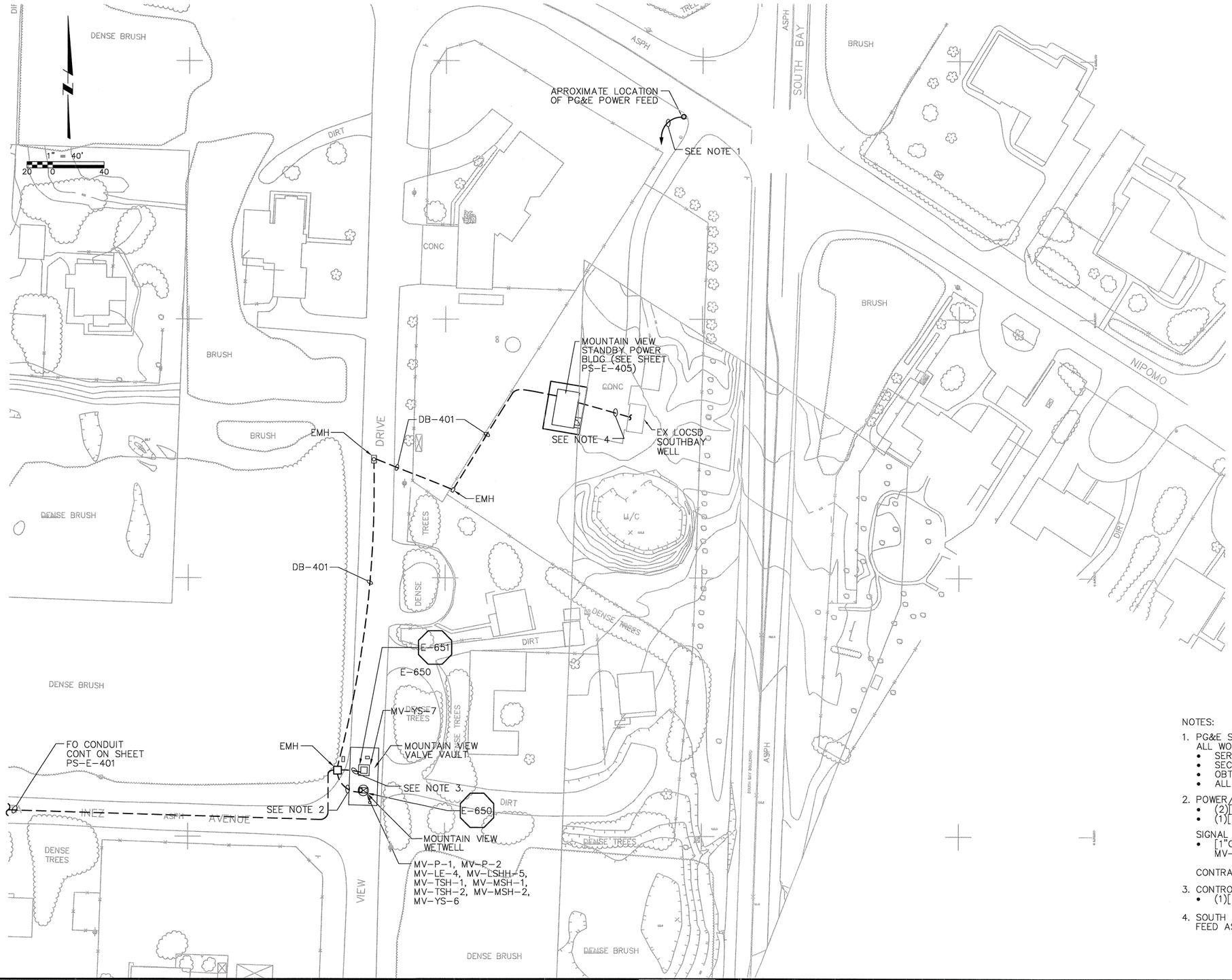

DB-401 DUCTBANK SCHEDULE

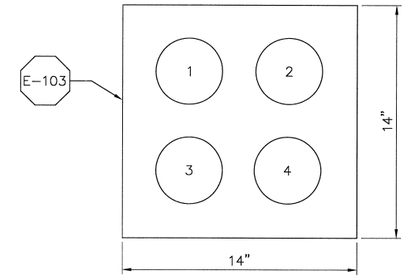

DUCT	CONDUIT	REMARKS
1	2"C; WITH POWER WIRES PER NOTE 2	MV-P-1 POWER
2	2"C; WITH POWER WIRES PER NOTE 2	MV-P-2 POWER
3	2"C; (REFER TO SPEC 16800)	FIBER OPTICS
4	2"C; WITH CONTROL WIRES PER NOTES 2 & 3	MV CONTROL

NOTES:

1. PG&E SERVICE: CONTRACTOR SHALL FURNISH, INSTALL AND COORDINATE ALL WORK INCLUDING AS A MINIMUM THE FOLLOWING:
   - SERVICE POLE RISER CONDUIT
   - SECONDARY CONDUIT: 1 – 3" C WITH PULL ROPE
   - OBTAIN PG&E APPROVAL PRIOR TO CONSTRUCTION
   - ALL WORK AND MATERIAL SHALL BE PER PG&E REQUIREMENTS
2. POWER/CONTROL DUCTBANK SHALL CONTAIN:
   - (2)[1"C. W/3#10, & 1#10 GRD]
   - (1)[1"C. W/12#14, 6#14 SPARE & 1#14 GRD]

   SIGNAL DUCTBANK SHALL CONTAIN:
   - [1"C. (1)2/ C #16 SHLD & (1)2/ C (OR AS REQUIRED FOR MV-LE-4 FURNISHED) #16 SHLD SPARE]

   CONTRACTOR SHALL MAINTAIN 12" SEPARATION BETWEEN DUCTBANKS.
3. CONTROL DUCTBANK SHALL CONTAIN:
   - (1)[1"C. W/2#14, 4#14 SPARE & 1#14 GRD]
4. SOUTH BAY WELL: DEMO OLD PG&E SERVICE AND INSTALL NEW ELECTRICAL FEED AS REQUIRED PER PS-E-404.

REV. NO.	DATE	DRWN	CHKD	REMARKS

DESIGNED BY: CAL
DRAWN BY: JAW
CHECKED BY: GNM
DATE: APRIL 2012

CDM Smith
2295 Gateway Oaks Drive, Suite 240
Sacramento, CA 95833
Tel: (916) 567-9900

0 1/2 1
IF THIS BAR DOES NOT MEASURE 1" THEN ADJUST SCALE ACCORDINGLY

REGISTERED PROFESSIONAL ENGINEER CHARLES A. LIVINGSTON II ELECTRICAL STATE OF CALIFORNIA

DIGALERT
DIAL TOLL FREE 1-800-642-2444
AT LEAST TWO DAYS BEFORE YOU DIG
UNDERGROUND SERVICE ALERT OF NORTHERN CALIFORNIA

LOS OSOS WASTEWATER COLLECTION SYSTEM

ELECTRICAL
MOUNTAIN VIEW SUBMERSIBLE PUMP STATION SITE – ELECTRICAL PLAN

PROJECT NO.42502-83120
FILE NAME: PS-E-403
SHEET NO.
PS-E-403

©2012 CDM SMITH ALL RIGHTS RESERVED.
REUSE OF DOCUMENTS: THESE DOCUMENTS AND DESIGNS PROVIDED BY PROFESSIONAL SERVICE, INCORPORATED HEREIN, ARE THE PROPERTY OF CDM SMITH AND ARE NOT TO BE USED, IN WHOLE OR PART, FOR ANY OTHER PROJECT WITHOUT THE WRITTEN AUTHORIZATION OF CDM SMITH.
N:\ACAD2008\los osos\01-sheets\PS\08-ELE\ PS-E-403 04/18/12 13:32 tglbatwk XREFS: x-feat-def-sou, xtoc_mdl, Xtopo_s, LosOsos-bdr, Ca-cal, Ductbank_details

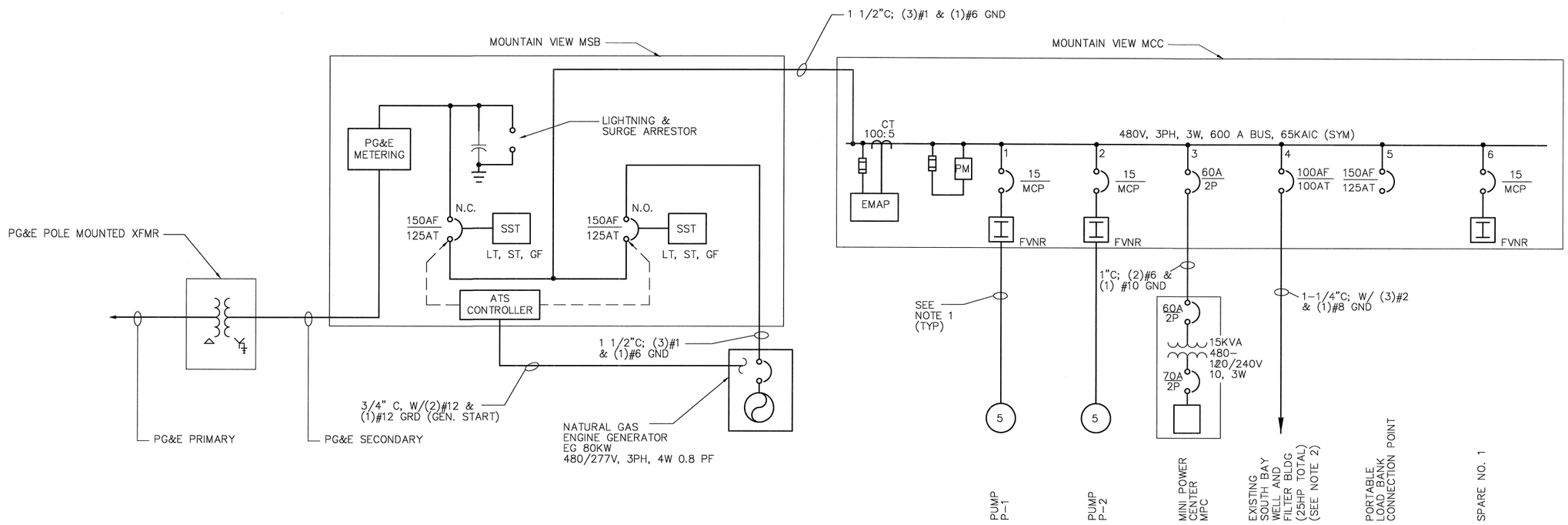

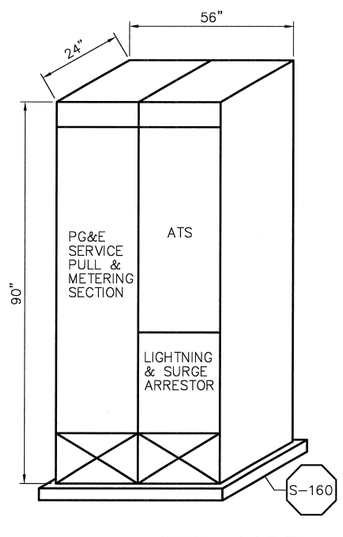

MOUNTAIN VIEW MSB

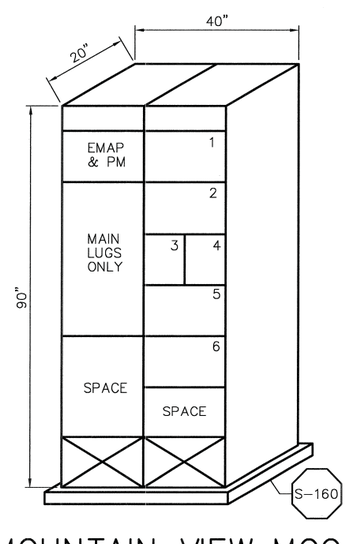

MOUNTAIN VIEW MCC

	MOUNTAIN VIEW			
	LOAD		AMPS @ 480V, 3P	
ITEM	KVA	HP	CONNECTED	DEMAND
P-1	--	5	7.6	5
P-2	--	5	7.6	5
MPC	15	--	31	21
EXIST SOUTH BAY WELL & FILTER BLDG	--	25	34	
TOTAL	--	--	80	32

NOTES:

1. SEE SHEET PS-E-403 FOR CONDUIT AND WIRE SIZES
2. PG&E SHALL REMOVE EXISTING SERVICE AND METER. CONTRACTOR SHALL INSTALL NEW CONDUIT AND WIRE FEEDING FILTER BUILDING AND SOUTHBAY WELL FROM NEW MOUNTAIN VIEW MCC.

©2012 CDM SMITH ALL RIGHTS RESERVED.
REUSE OF DOCUMENTS: THESE DOCUMENTS AND DESIGNS PROVIDED BY PROFESSIONAL SERVICE, INCORPORATED HEREIN, ARE THE PROPERTY OF CDM SMITH AND ARE NOT TO BE USED, IN WHOLE OR PART, FOR ANY OTHER PROJECT WITHOUT THE WRITTEN AUTHORIZATION OF CDM SMITH.
N:\ACAD2008\los osos\01-sheets\PS\08-ELE\ PS-E-404 04/20/12 17:57 rushma XREFS: LosOsos-bdr, Ca-cal

REV. NO.	DATE	DRWN	CHKD	REMARKS

DESIGNED BY: CAL
DRAWN BY: JAW
CHECKED BY: GNM
DATE: APRIL 2012

CDM Smith
2295 Gateway Oaks Drive, Suite 240
Sacramento, CA 95833
Tel: (916) 567-9900

IF THIS BAR DOES NOT MEASURE 1" THEN ADJUST SCALE ACCORDINGLY

DIGALERT
DIAL TOLL FREE 1-800-642-2444
AT LEAST TWO DAYS BEFORE YOU DIG
UNDERGROUND SERVICE ALERT OF NORTHERN CALIFORNIA

LOS OSOS WASTEWATER COLLECTION SYSTEM

ELECTRICAL MOUNTAIN VIEW PS & STANDBY POWER – SINGLE LINE

PROJECT NO.42502-83120
FILE NAME: PS-E-404
SHEET NO.
PS-E-404

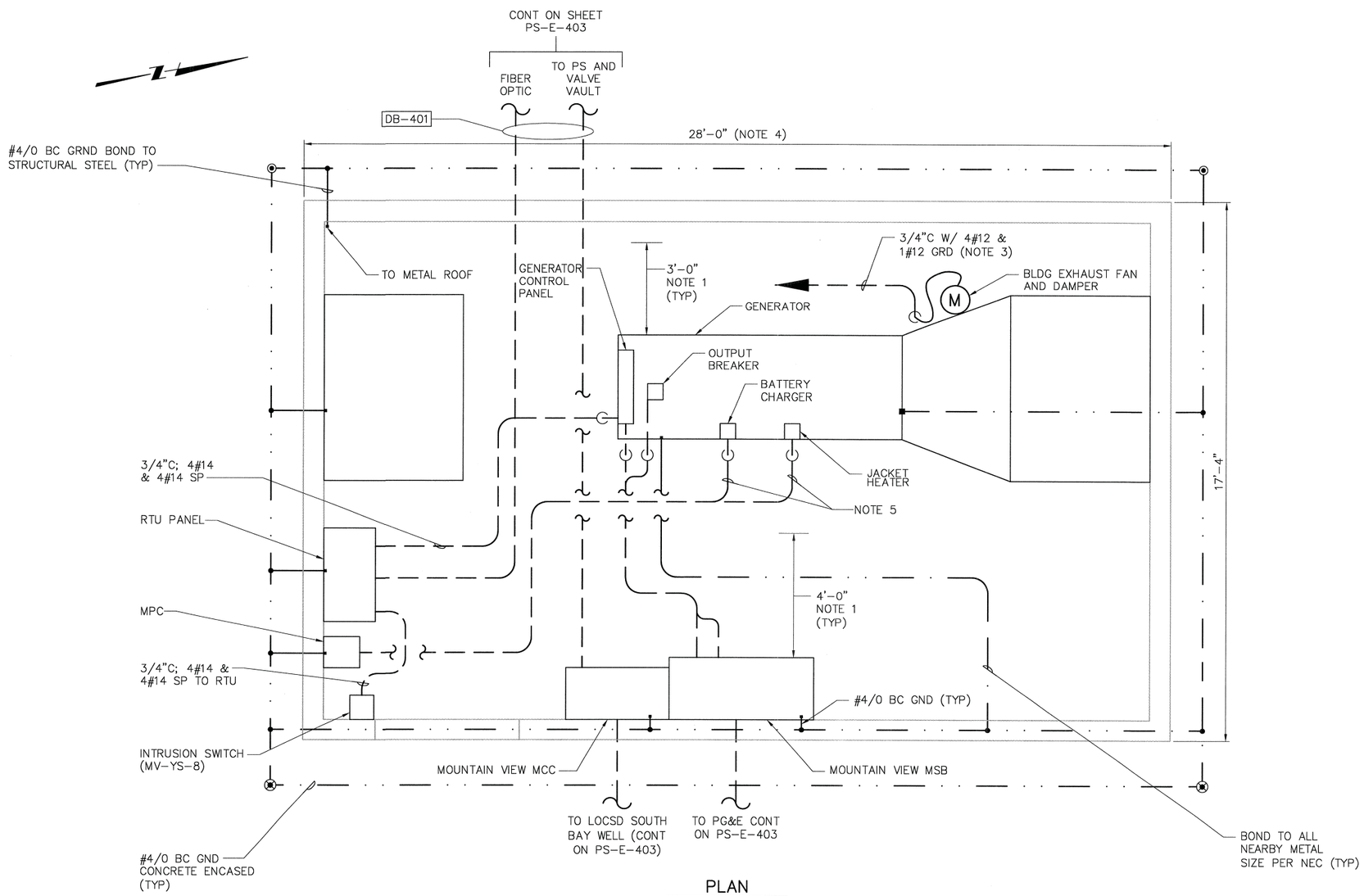

PLAN

SCALE: 1/2"=1'-0"

NOTES:

1. THE ELECTRICAL AND MECHANICAL EQUIPMENT IS SHOWN IN GENERAL LOCATION ONLY. THE CONTRACTOR SHALL DETERMINE THE EXACT LOCATION OF EQUIPMENT BASED ON THE EQUIPMENT FURNISHED AS REQUIRED TO MAINTAIN THE FOLLOWING MINIMUM CLEARANCES:
   - A MIMIMUM 4'-0" WORKING CLEARANCE IN FRONT OF ALL ELECTRICAL EQUIPMENT.
   - A MINIMUM 3'-0" MAINTENANCE ACCESS CLEARANCE AROUND ALL MECHANICAL EQUIPMENT.
2. REFER TO PS-E-009 FOR LIGHTING AND FIRE DETECTION DETAILS.
3. CONNECT EXHAUST FAN TO MPC VIA ATC. (REFER TO SHEET PS-E-009.)
4. REFER TO STRUCTURAL AND MECHANICAL DRAWINGS FOR ADDITIONAL BUILDING DETAILS.
5. 3/4"C. W/WIRES PER GENERATOR MANUFACTURER'S REQUIREMENTS

©2012 CDM SMITH ALL RIGHTS RESERVED.
REUSE OF DOCUMENTS: THESE DOCUMENTS AND DESIGNS PROVIDED BY PROFESSIONAL SERVICE, INCORPORATED HEREIN, ARE THE PROPERTY OF CDM SMITH AND ARE NOT TO BE USED, IN WHOLE OR PART, FOR ANY OTHER PROJECT WITHOUT THE WRITTEN AUTHORIZATION OF CDM SMITH.
N:\ACAD2008\los osos\01-sheets\PS\08-ELE\ PS-E-405 04/23/12 10:20 talbotwk XREFS: LosOsos-bdr, Ca-cal, X-ELEC-BUILDING

REV. NO.	DATE	DRWN	CHKD	REMARKS

DESIGNED BY: CAL
DRAWN BY: JAW
CHECKED BY: GNM
DATE: APRIL 2012

CDM Smith
2295 Gateway Oaks Drive, Suite 240
Sacramento, CA 95833
Tel: (916) 567-9900

0 1/2 1
IF THIS BAR DOES NOT MEASURE 1" THEN ADJUST SCALE ACCORDINGLY

REGISTERED PROFESSIONAL ENGINEER CHARLES A. LINDQUIST No. E 8841 Exp. 3/31/2014 4/2/12 ELECTRICAL STATE OF CALIFORNIA

DIGALERT
DIAL TOLL FREE 1-800-642-2444
AT LEAST TWO DAYS BEFORE YOU DIG
UNDERGROUND SERVICE ALERT OF NORTHERN CALIFORNIA

LOS OSOS WASTEWATER COLLECTION SYSTEM
ELECTRICAL MOUNTAIN VEW STANDBY POWER BUILDING
POWER, INSTRUMENTATION, & GRD PLAN

PROJECT NO.42502-83120
FILE NAME: PS-E-405
SHEET NO.
PS-E-405

INSTRUMENTATION SYMBOLS

- LIT — INSTRUMENT OR OTHER COMPONENT TO BE MOUNTED IN THE FIELD
- TSL — INSTRUMENT OR OTHER COMPONENT TO BE MOUNTED INSIDE CONTROL PANEL
- FIC — INSTRUMENT OR OTHER COMPONENT TO BE MOUNTED ON FRONT OF CONTROL PANEL
- PIR PSH — SINGLE INSTRUMENT OR OTHER COMPONENT HAVING MULTIPLE FUNCTIONS
- INSTRUMENT OR OTHER COMPONENT TO BE FURNISHED AND INSTALLED BY OTHERS IN THE FUTURE
- RTU DIGITAL INPUT
- RTU DIGITAL OUTPUT
- RTU ANALOG INPUT
- RTU ANALOG OUTPUT
- > < — HIGH/LOW SELECTOR
- RELATED DEVICE PERFORMS LINEARIZING OR SQUARE ROOT FUNCTION
- X Σ ÷ — RELATED DEVICE PERFORMS MULTIPLYING, SUMMATION, OR DIVISION FUNCTION
- I — GENERALIZED FOR COMPLEX INTERLOCK LOGIC–SEE SCHEMATICS OR SPECIFICATIIONS
- PNEUMATIC PRESSURE (P) SIGNAL
- ELECTRIC SIGNAL
- HYDRAULIC LINE
- MAIN PROCESS PIPING
- SONIC SIGNAL
- CAPILLIARY TUBING (FILLED SYSTEM)
- A.S. — AIR SUPPLY (20 PSIG–EXCEPT AS NOTED)

XX = WP = WEST PASO
XX = EP = EAST PASO
XX = BY = BAYWOOD
XX = SY = SANTA YSABEL
XX = EH = EAST PASO HARVEST WELL

EQUIPMENT NUMBER

XXX–P–1

MECHANICAL EQUIPMENT CALLOUT

FIRST LETTER — SUCCEEDING LETTER(S)

FIC 1

INSTRUMENT LOOP NUMBER

INSTRUMENT TAG NUMBER

SUPERVISORY CONTROL, ALARM, & DATA AQUISITION SYMBOLS

- INDICATOR/CONTROLLER/RECORDER OR ALARM NORMALLY ACCESSIBLE TO OPERATOR FROM OMI.
- INTERNAL FUNCTION NOT NORMALLY ACCESSIBLE TO OPERATOR
- DATA LINK
- J — GENERALIZED FOR COMPLEX INTERLOCK LOGIC PERFORMED IN SOFTWARE. SEE SCHEMATICS OR SPECIFICATIONS FOR DETAILS.

MISCELLANEOUS ABBREVIATIONS

AM	AUTO/MANUAL	N.C.	NORMALLY CLOSED
A. S.	AIR SUPPLY FROM SERVICE AIR SYSTEM	N.O.	NORMALLY OPEN
ATM	ATMOSPHERE	OC	OPEN/CLOSE
CB	CIRCUIT BREAKER	OL	OVERLOAD
DEV	DEVIATION	OLH	OFF/LOW/HIGH
F.C.	FAIL CLOSED	OSC	OPEN/STOP/CLOSE
F.O.	FAIL OPEN	PCT	PERCENT
FR	FORWARD/REVERSE	PLC	PROGRAMMABLE CONTROLLER
HA	HAND/AUTOMATIC	POT.	POTENTIONMETER
H/L	HOST/LOCAL	RDY	READY
HOA	HAND/OFF/AUTOMATIC	REM	REMOTE
HOR	HAND/OFF/REMOTE	RIO	REMOTE INPUT / OUTPUT
HYD	HYDRAULIC	RSL	RAISE/STOP/LOWER
ID	INCREASE/DECREASE	RTU	REMOTE TERMINAL UNIT
IOE	INTERNAL/OFF/EXTERNAL	RVSS	REDUCED VOLTAGE SOLID STATE MOTOR CONTROLLER
KO	TIMER/OFF	SCD	STREAMING CURRENT DETECTOR
I/P	CURRENT TO PNEUMATIC	SD	SHUTDOWN
LCB	LOCAL CONTROL BOARD	SEL	SELECT
LCP	LOCAL CONTROL PANEL	S/M	STROKES/MINUTE
LOR	LOCAL/OFF/REMOTE	SOF	SLOW/OFF/FAST
LOS	LOCK/OUT/STOP	SP	SET POINT
LR	LOCAL/REMOTE	S/S	START/STOP
MCB	MAIN CONTROL BOARD	TOP	TEST/OFF/PLC
MCC	MOTOR CONTROL CENTER	TSP	TWISTED SHIELDED PAIR
OMI	OPERATOR MACHINE INTERFACE	VFD	VARIABLE FREQUENCY DRIVE
NOR/BU	NORMAL/BACKUP		

INSTRUMENT IDENTIFICATION TAG LETTERS

LETTER	FIRST LETTER: MEASURED OR INITIATING VARIABLE	FIRST LETTER: MODIFIER	SUCCEEDING LETTERS: READOUT OR PASSIVE FUNCTION	SUCCEEDING LETTERS: OUTPUT FUNCTION	SUCCEEDING LETTERS: MODIFIER
A	ANALYSIS		ALARM		
B	BURNER FLAME		USER'S CHOICE	USER'S CHOICE	USER'S CHOICE
C	CONDUCTIVITY (ELECTRICAL)			CONTROLLER	CLOSED
D	DENSITY	DIFFERENTIAL			
E	VOLTAGE (EMF)		PRIMARY ELEMENT		
F	FLOW	RATIO			
G	GAGING (DIMENSIONAL)		GLASS		
H	HAND (MANUALLY INITIATED)				HIGH
I	CURRENT (ELEC)		INDICATE		
J	POWER	SCAN			
K	TIME OR TIME SCHEDULE			CONTROL STA.	
L	LEVEL		LIGHT(PILOT)		LOW
M	MOISTURE OR HUMIDITY				MIDDLE OR INTERMEDIATE
N	TORQUE		ISOLATOR		
O	USER'S CHOICE		ORIFICE		OPEN
P	PRESSURE OR PNEUMATIC		POINT		
Q	QUANTITY	INTEGRATE TOTALIZE			
R	RADIOACTIVITY		RECORD OR PRINT		
S	SPEED / FREQUENCY			SWITCH	
T	TEMPERATURE			TRANSMITTER	
U	MULTIVARIABLE		MULTIFUNCTION	MULTIFUNCTION	MULTIFUNCTION
V	VISCOSITY			VALVE DAMPER OR LOUVER	
W	WEIGHT OR FORCE		WELL		
X	UNCLASSIFIED		UNCLASSIFIED	UNCLASSIFIED	UNCLASSIFIED
Y	EVENT, STATE OR PRESENCE			RELAY OR COMPUTE	
Z	POSITION				

Cl	CHLORINE RESIDUAL	O_3	OZONE
HC	HYDROCARBON	D.O.	DISSOLVED OXYGEN
pH	HYDROGEN ION CONCENTRATION	SCU	STREAMING CURRENT UNIT
Tu	TURBIDITY		
SS	SUSPENDED SOLIDS		
O_2	OXYGEN CONCENTRATION		
SCD	STREAMING CURRENT DETECTOR		

SAMPLE LOOP DIAGRAM – MINIMUM REQUIRED

DISPLAY BLOCK CONFIGURATION
(PER MANUFACTURER STD.)

INSTRUMENT TAG NO.	FI–01	
TYPE	IND	
AREA GROUP–LOOP (AGL)		
LABEL NO. 1	SECOND	
LABEL NO. 2	FLOW	
LABEL NO. 3	(HIGH)	
(PER MANUFACTURER STD.)		

CONTROL BLOCK CONFIGURATION
(PER MANUFACTURER STD.)

BLOCK	B–XX	B–XX
NAME	ALARM	CALC
TRACK		
(PER MANUFACTURER STD.)		

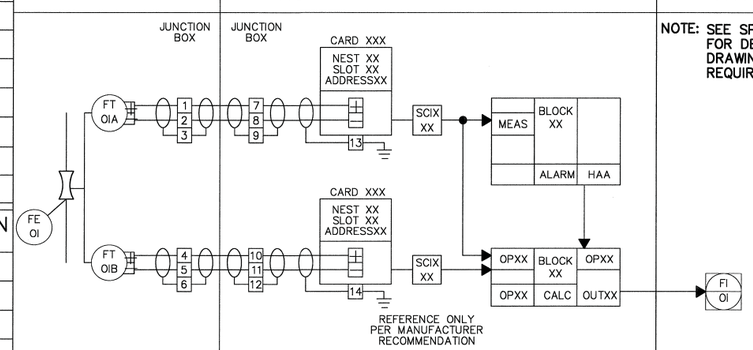

NOTE: SEE SPECIFICATION ____ FOR DETAILS OF SHOP DRAWING SUBMITTAL REQUIREMENTS.

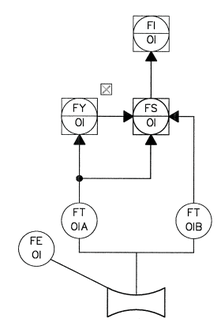

P & I D PRESENTATION

NOTES

1. ADDITIONAL INSTRUMENTATION AND CONTROL SYMBOLS MAY BE USED AS REQUIRED. SYMBOLS AND NOMENCLATURE ARE BASED ON ISA STANDARD S 5.1.
2. SEE ASSOCIATED ELECTRICAL AND MECHANICAL SYMBOL SHEETS FOR ADDITIONAL SYMBOLS AND ABBREVIATIONS.
3. FOR DETAILS OF METER COUPLING AND OTHER MECHANICAL EQUIPMENT (e.g. VALVES, PUMPS, ETC.) SEE MECHANICAL DRAWINGS AND SPECIFICATIONS.
4. SYSTEM INTEGRATOR TO MEET THE PARTICULAR CHARACTERISTICS (e.g. VOLTAGE AND CURRENT REQUIREMENTS) OF COMPONENTS IN EACH LOOP OR SYSTEM.
5. ALL FIELD SWITCHES FOR ELECTRIC MOTOR OPERATION WILL BE SUPPLIED UNDER THE ELECTRICAL SPECIFICATIONS. EXCEPTIONS ARE WHEN SWITCHES ARE MOUNTED ON PANELS OR PART OF VENDOR PACKAGES. ALL ELECTRIC ACTUATORS ON VALVES, SLUICE GATES, ETC. ARE SUPPLIED WITH THE EQUIPMENT BY THE EQUIPMENT SUPPLIERS.

REV. NO.	DATE	DRWN	CHKD	REMARKS

DESIGNED BY: CAL
DRAWN BY: JAW
CHECKED BY: GNM
DATE: APRIL 2012

CDM Smith
2295 Gateway Oaks Drive, Suite 240
Sacramento, CA 95833
Tel: (916) 567-9900

0 1/2 1
IF THIS BAR DOES NOT MEASURE 1" THEN ADJUST SCALE ACCORDINGLY

REGISTERED PROFESSIONAL ENGINEER CHARLES N. LIVINGSTON III No. E 8841 Exp. 3/31/2014 ELECTRICAL STATE OF CALIFORNIA 4/2/12

DIGALERT
DIAL TOLL FREE 1-800-642-2444
AT LEAST TWO DAYS BEFORE YOU DIG
UNDERGROUND SERVICE ALERT OF NORTHERN CALIFORNIA

LOS OSOS WASTEWATER COLLECTION SYSTEM

INSTRUMENTATION SYMBOLS AND ABBREVIATIONS – 1

PROJECT NO.42502–83120
FILE NAME: PS–I–001
SHEET NO.
PS–I–001

©2012 CDM SMITH ALL RIGHTS RESERVED.
REUSE OF DOCUMENTS: THESE DOCUMENTS AND DESIGNS PROVIDED BY PROFESSIONAL SERVICE, INCORPORATED HEREIN, ARE THE PROPERTY OF CDM SMITH AND ARE NOT TO BE USED, IN WHOLE OR PART, FOR ANY OTHER PROJECT WITHOUT THE WRITTEN AUTHORIZATION OF CDM SMITH.
N:\ACAD2008\los osos\01-sheets\PS\09-INS\ PS-I-001 04/24/12 10:21 wernerja XREFS: LosOsos-bdr, Co-cdl

©2012 CDM SMITH ALL RIGHTS RESERVED.
REUSE OF DOCUMENTS: THESE DOCUMENTS AND DESIGNS PROVIDED BY PROFESSIONAL SERVICE, INCORPORATED HEREIN, ARE THE PROPERTY OF CDM SMITH AND ARE NOT TO BE USED, IN WHOLE OR PART, FOR ANY OTHER PROJECT WITHOUT THE WRITTEN AUTHORIZATION OF CDM SMITH.
N:\ACAD2008\los osos\01-sheets\PS\09-INS\ PS-I-002 04/09/12 15:18 rushmo XREFS: Los0sos-bdr, Ca-cdi

PUMP AND COMPRESSOR SYMBOLS

- CENTRIFUGAL PUMP
- CENTRIFUGAL WET PIT PUMP OR TURBINE PUMP
- CHEMICAL FEED PUMP
- FEED GRINDER
- GEAR PUMP OR BLOWER (POSITIVE DISPLACEMENT)
- PISTON PUMP
- VERTICAL TURBINE PUMP
- PROGRESSIVE CAVITY PUMP
- SUBMERSIBLE SUMP PUMP
- COMPRESSOR (CENTRIFUGAL) OR TURBINE MOTOR
- COMPRESSOR (PISTON)
- EJECTOR
- BLOWER
- AERATOR
- FEED PUMP

MISCELLANEOUS SYMBOLS

- BLIND FLANGE
- AIR GAP
- DRAIN
- INLINE MIXER
- PULSATION DAMPENER
- HORN
- UNION
- SLIDE GATE
- FLEXIBLE CONNECTION
- 24"-SE PIPE CALL-OUT
- STRAINER
- BACKFLOW PREVENTER
- RUPTURE DISK
- MIXER
- ELECTRIC MOTOR
- RADIO ANTENNA
- DEMISTER
- AIR FILTER
- WATER LEVEL
- CONCENTRIC REDUCER
- QUICK DISCONNECT
- THREADED CAP
- EJECTOR

PRIMARY ELEMENT SYMBOLS

- VENTURI FLOWMETER
- ORIFICE FLOWMETER
- MAGNETIC FLOWMETER
- PROPELLER FLOWMETER
- PITOT TUBE
- SONIC FLOWMETER
- VORTEX FLOWMETER
- VARIABLE AREA FLOW INDICATOR (ROTAMETER) — OPTIONAL THROTTLE VALVE
- PARSHALL FLUME
- SONIC LEVEL SENSOR
- TIPPING FLOAT LEVEL SWITCH
- INDUCTIVE RELAY LEVEL SWITCH
- INVERTED COLUMN LEVEL SWITCH
- BUBBLER
- SUSPENSION CABLE LEVEL SWITCH
- PRESSURE TRANSMITTER WITH DIAPHRAM SEAL
- TEMPERATURE ELEMENT WITH WELL
- SUSPENDED SENSOR LEVEL TRANSMITTER
- HYDRALIC WEIGHT TRANSMITTER
- ANNULAR SEAL

VALVE SYMBOLS

- BUTTERFLY
- SILENT CHECK
- SWING CHECK
- BALL CHECK
- PLUG VALVE
- BALL VALVE
- GATE
- GLOBE
- DIAPHRAGM
- NEEDLE
- AIR RELEASE OR AIR/VACUUM VALVE
- PRESSURE RELIEF OR SAFETY
- PRESSURE REGULATOR
- 3-WAY
- WEIGHT BALANCED VALVE
- ANGLE VALVE
- DAMPER

VALVE ACTUATORS

- SOLENOID
- ROTARY MOTOR
- DIAPHRAGM
- DIAPHRAGM WITH ATTACHED ELECTRO-PNEUMATIC CONVERTER
- DUAL CHAMBER HYDRAULIC OR PNEUMATIC CYLINDER

REV. NO.	DATE	DRWN	CHKD	REMARKS

DESIGNED BY: CAL
DRAWN BY: JAW
CHECKED BY: GNM
DATE: APRIL 2012

CDM Smith
2295 Gateway Oaks Drive, Suite 240
Sacramento, CA 95833
Tel: (916) 567-9900

IF THIS BAR DOES NOT MEASURE 1" THEN ADJUST SCALE ACCORDINGLY

DIGALERT — DIAL TOLL FREE 1-800-642-2444 AT LEAST TWO DAYS BEFORE YOU DIG — UNDERGROUND SERVICE ALERT OF NORTHERN CALIFORNIA

LOS OSOS WASTEWATER COLLECTION SYSTEM

INSTRUMENTATION SYMBOLS AND ABBREVIATIONS – 2

PROJECT NO.42502-83120
FILE NAME: PS-I-002
SHEET NO.
PS-I-002

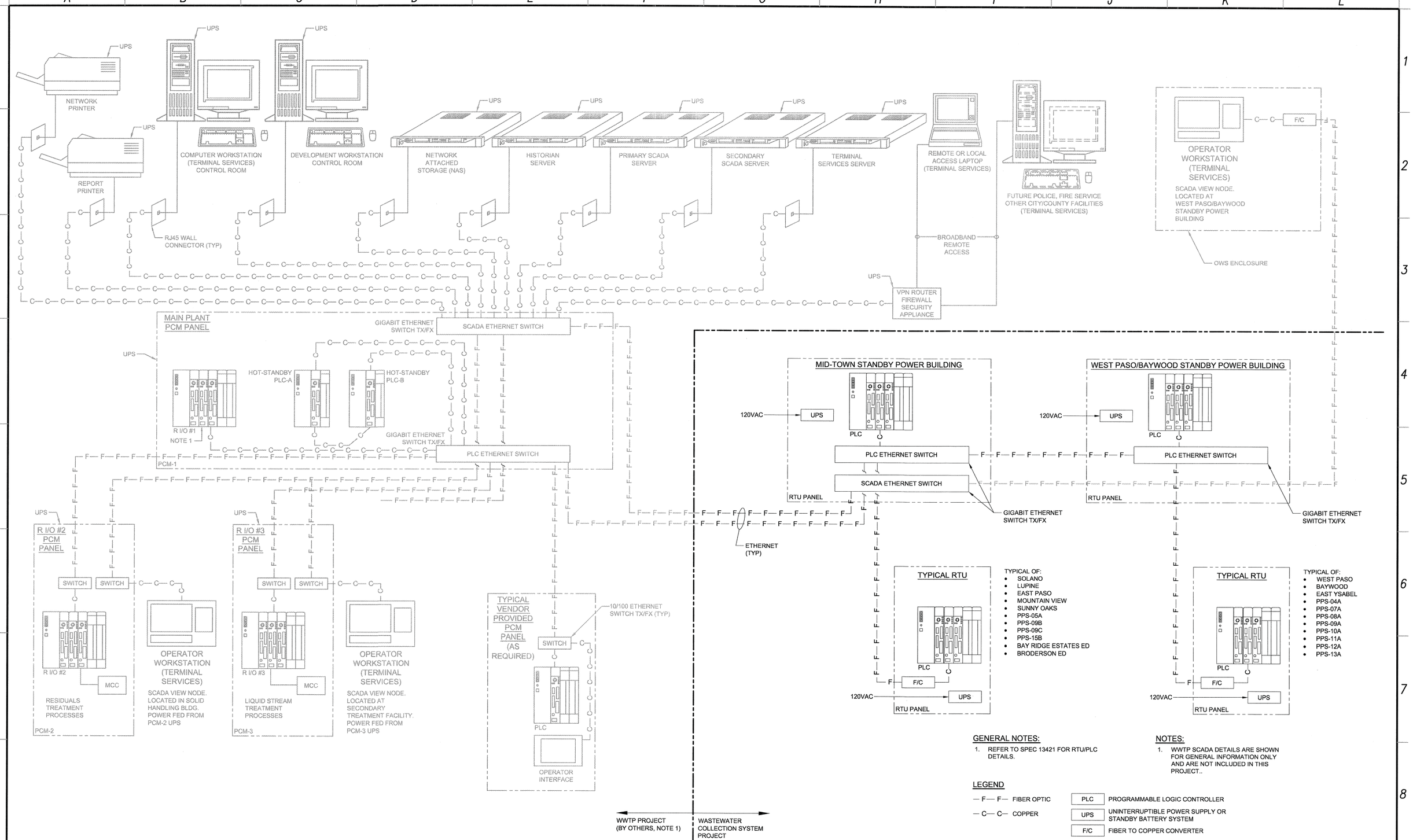

GENERAL NOTES:

1. REFER TO SPEC 13421 FOR RTU/PLC DETAILS.

NOTES:

1. WWTP SCADA DETAILS ARE SHOWN FOR GENERAL INFORMATION ONLY AND ARE NOT INCLUDED IN THIS PROJECT..

LEGEND

— F— F—	FIBER OPTIC	PLC	PROGRAMMABLE LOGIC CONTROLLER
— C— C—	COPPER	UPS	UNINTERRUPTIBLE POWER SUPPLY OR STANDBY BATTERY SYSTEM
		F/C	FIBER TO COPPER CONVERTER

REV. NO.	DATE	DRWN	CHKD	REMARKS

DESIGNED BY: CAL
DRAWN BY: WKT
CHECKED BY: GNM
DATE: APRIL 2012

CDM Smith
2295 Gateway Oaks Drive, Suite 240
Sacramento, CA 95833
Tel: (916) 567-9900

IF THIS BAR DOES NOT MEASURE 1" THEN ADJUST SCALE ACCORDINGLY

DIGALERT
DIAL TOLL FREE 1-800-642-2444
AT LEAST TWO DAYS BEFORE YOU DIG
UNDERGROUND SERVICE ALERT OF NORTHERN CALIFORNIA

LOS OSOS WASTEWATER COLLECTION SYSTEM

INSTRUMENTATION SCADA SYSTEM ARCHITECTURE

PROJECT NO.42502-83120
FILE NAME: PS-I-003
SHEET NO.
PS-I-003

©2012 CDM SMITH ALL RIGHTS RESERVED.
THESE DOCUMENTS AND DESIGNS PROVIDED BY PROFESSIONAL SERVICE, INCORPORATED HEREIN, ARE THE PROPERTY OF CDM SMITH AND ARE NOT TO BE USED, IN WHOLE OR PART, FOR ANY OTHER PROJECT WITHOUT THE WRITTEN AUTHORIZATION OF CDM SMITH.
REUSE OF DOCUMENTS:
N:\ACAD2008\los osos\01-sheets\PS\09-INS\ PS-I-003 04/23/12 12:36 wernerjg XREFS: LosOsos-bdr, Co-cdf

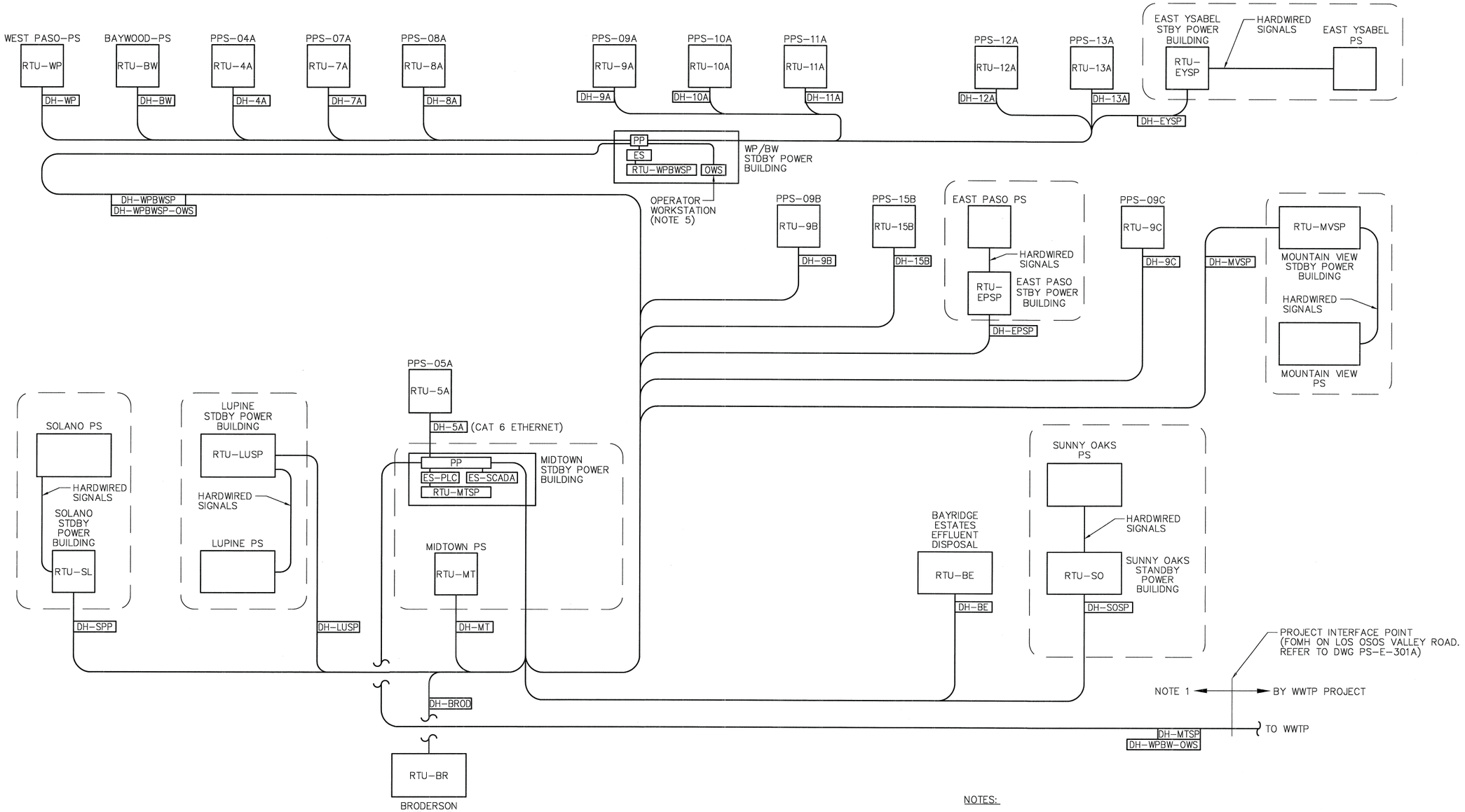

NOTES:

1. REFER TO SPECS 16800 AND DIVISION 13 FOR SCOPE OF FIBER OPTIC CABLE AND FIBER OPTIC CONDUIT WORK INCLUDED IN THIS CONTRACT.
2. EACH DH-XXX REPRESENTS A SINGLE & CONTINUOUS FIBER OPTIC CABLE. EACH FIBER OPTIC CABLE SHALL BE CONTINUOUS FROM RTU TO PP OR PP TO PP. FIBER OPTIC CABLES SHALL NOT BE SPLICED WITHOUT SUBMITTAL OF FULL DETAILS AND APPROVAL BY THE ENGINEER.
3. SEE SITE PLANS FOR CONDUIT ROUTING.
4. ALL DATA HIGHWAYS SHALL BE FIBER OPTIC UNLESS NOTED OTHERWISE. REFER TO SPEC 16801 FOR NUMBER OF FIBERS PER CABLE AND OTHER CABLE REQUIREMENTS.
5. OWS AT WEST PASO/BAYWOOD STANDBY POWER BUILDING WILL BE FURNISHED & INSTALLED BY THE WWTP CONTRACTOR. (REFER TO SPECS FOR ADDITIONAL DETAILS.)

LEGEND

DH-XXX	FIBER OPTIC DATA HIGHWAY CABLE DESIGNATION (UNLESS NOTED OTHERWISE)
ES-PLC	ETHERNET SWITCH – PLC NETWORK
ES-SCADA	ETHERNET SWITCH – SCADA NETWORK
PP	PATCH PANEL
RTU	REMOTE TERMINAL UNIT

REV. NO.	DATE	DRWN	CHKD	REMARKS

DESIGNED BY: CAL
DRAWN BY: WKT
CHECKED BY: GNM
DATE: APRIL 2012

CDM Smith
2295 Gateway Oaks Drive, Suite 240
Sacramento, CA 95833
Tel: (916) 567-9900

0 1/2 1
IF THIS BAR DOES NOT MEASURE 1" THEN ADJUST SCALE ACCORDINGLY

REGISTERED PROFESSIONAL ENGINEER — CHARLES A. LIMBACHER II — No. E 6941 — Exp. 3/01/2014 — ELECTRICAL — STATE OF CALIFORNIA

DIGALERT
DIAL TOLL FREE 1-800-642-2444
AT LEAST TWO DAYS BEFORE YOU DIG
UNDERGROUND SERVICE ALERT OF NORTHERN CALIFORNIA

LOS OSOS WASTEWATER COLLECTION SYSTEM

INSTRUMENTATION FIBER OPTIC CONDUIT INTERCONNECT DIAGRAM

PROJECT NO.42502-83120
FILE NAME: PS-I-004
SHEET NO.
PS-I-004

©2012 CDM SMITH ALL RIGHTS RESERVED.
REUSE OF DOCUMENTS: THESE DOCUMENTS AND DESIGNS PROVIDED BY PROFESSIONAL SERVICE, INCORPORATED HEREIN, ARE THE PROPERTY OF CDM SMITH AND ARE NOT TO BE USED, IN WHOLE OR PART, FOR ANY OTHER PROJECT WITHOUT THE WRITTEN AUTHORIZATION OF CDM SMITH.
N:\ACAD2008\los osos\01-sheets\PS\09-INS\ PS-I-004 04/24/12 10:28 weinerja XREFS: LosOsos-bdr, Co-cal

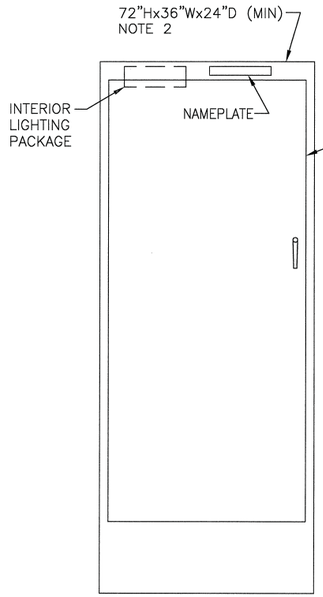

TYPICAL RTU PANEL ELEVATION
NOTE 1

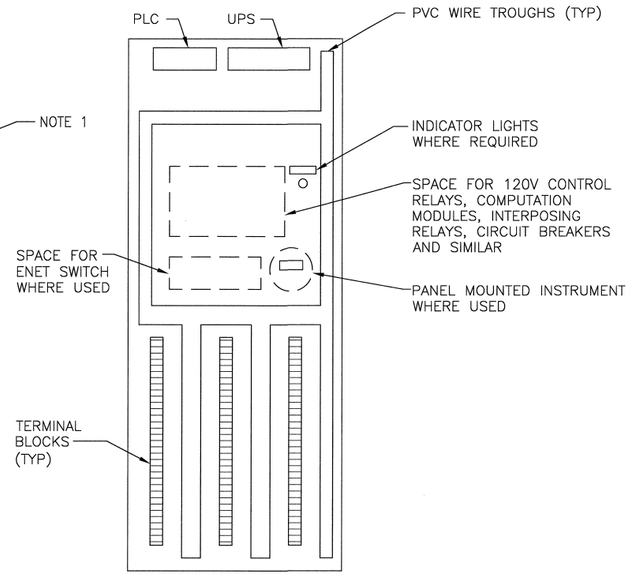

TYPICAL RTU BACK PANEL ELEVATIONS
NOTE 1

TYPICAL RTU PANEL ELEVATIONS

I-101

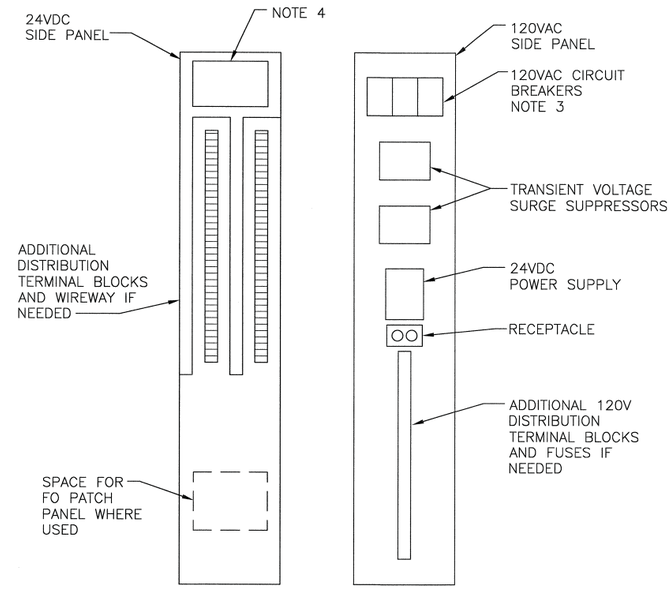

TYPICAL RTU SIDE PANEL ELEVATIONS
NOTE 1

NOTES:

1. PANEL ELEVATION ILLUSTRATES GENERAL CONFIGURATION OF AN RTU PANEL. NOT ALL REQUIRED DEVICES, WIREWAYS, ETC. SHOWN. ISS TO DEVELOP CUSTOM PANEL ELEVATIONS TO COMPLY WITH SPECIFICATIONS, NETWORK ARCHITECTURE AND P&ID DRAWINGS.
2. SEE PANEL LIST IN SECTION 13422 FOR NEMA RATINGS.
3. BREAKER AND FUSE SIZES TO BE DETERMINED BY PANEL MANUFACTURER BASED EQUIPMENT SERVED.
4. FAN OR AIR CONDITIONER IF REQUIRED BY HEAT DISSIPATION CALCULATIONS.

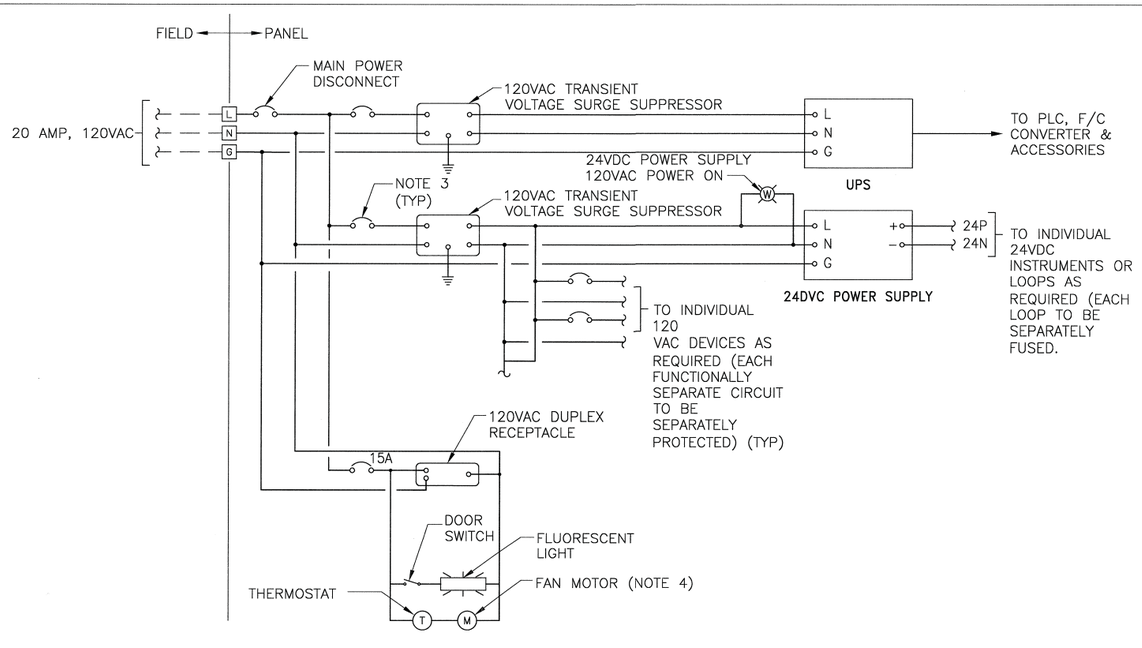

TYPICAL RTU PANEL POWER WIRING

I-102

REV. NO.	DATE	DRWN	CHKD	REMARKS

DESIGNED BY: CAL
DRAWN BY: JAW
CHECKED BY: GNM
DATE: APRIL 2012

CDM Smith
2295 Gateway Oaks Drive, Suite 240
Sacramento, CA 95833
Tel: (916) 567-9900

0 1/2 1
IF THIS BAR DOES NOT MEASURE 1" THEN ADJUST SCALE ACCORDINGLY

REGISTERED PROFESSIONAL ENGINEER
CHARLES A. LINDQUIST II
No. E-8841
Exp. 3/31/2014
ELECTRICAL
STATE OF CALIFORNIA

DIGALERT
DIAL TOLL FREE
1-800-642-2444
AT LEAST TWO DAYS BEFORE YOU DIG
UNDERGROUND SERVICE ALERT OF NORTHERN CALIFORNIA

LOS OSOS WASTEWATER COLLECTION SYSTEM
INSTRUMENTATION DETAILS

PROJECT NO.42502-83120
FILE NAME: PS-I-005
SHEET NO.
PS-I-005

©2012 CDM SMITH ALL RIGHTS RESERVED.
REUSE OF DOCUMENTS: THESE DOCUMENTS AND DESIGNS PROVIDED BY PROFESSIONAL SERVICE, INCORPORATED HEREIN, ARE THE PROPERTY OF CDM SMITH AND ARE NOT TO BE USED, IN WHOLE OR PART, FOR ANY OTHER PROJECT WITHOUT THE WRITTEN AUTHORIZATION OF CDM SMITH.
N:\ACAD2008\los osos\01-sheets\PS\09-INS\ PS-I-005 04/23/12 10:43 rushma XREFS: LosOsos-bdr, Ca-cal

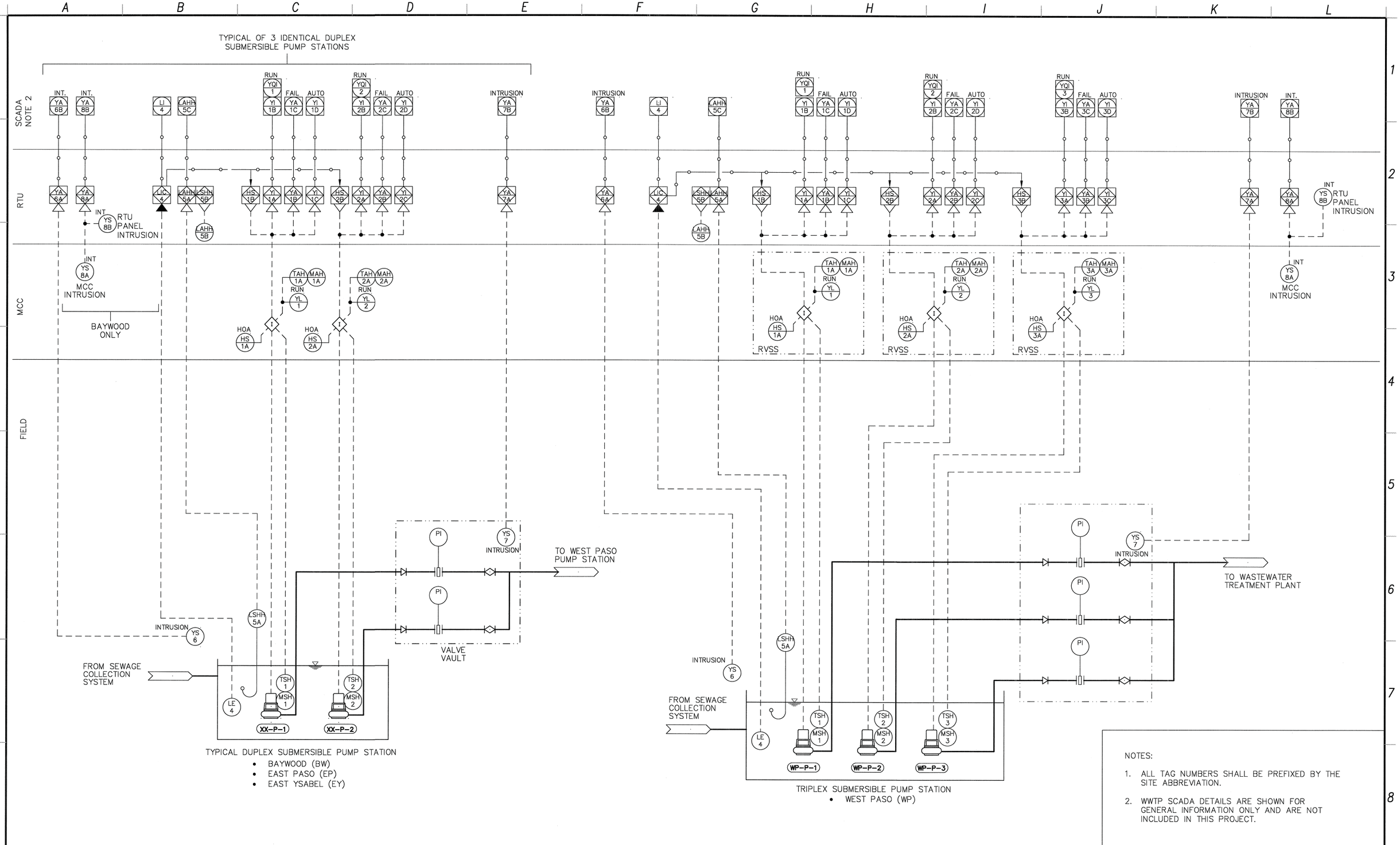

NOTES:

1. ALL TAG NUMBERS SHALL BE PREFIXED BY THE SITE ABBREVIATION.
2. WWTP SCADA DETAILS ARE SHOWN FOR GENERAL INFORMATION ONLY AND ARE NOT INCLUDED IN THIS PROJECT.

REV. NO.	DATE	DRWN	CHKD	REMARKS

DESIGNED BY: CAL
DRAWN BY: JAW
CHECKED BY: GNM
DATE: APRIL 2012

CDM Smith
2295 Gateway Oaks Drive, Suite 240
Sacramento, CA 95833
Tel: (916) 567-9900

0 1/2 1
IF THIS BAR DOES NOT MEASURE 1" THEN ADJUST SCALE ACCORDINGLY

DIGALERT
DIAL TOLL FREE 1-800-642-2444
AT LEAST TWO DAYS BEFORE YOU DIG
UNDERGROUND SERVICE ALERT OF NORTHERN CALIFORNIA

LOS OSOS WASTEWATER COLLECTION SYSTEM
INSTRUMENTATION AREA A PUMP STATIONS P&ID-1

PROJECT NO. 42502-83120
FILE NAME: PS-I-101
SHEET NO.
PS-I-101

©2012 CDM SMITH ALL RIGHTS RESERVED.
REUSE OF DOCUMENTS: THESE DOCUMENTS AND DESIGNS PROVIDED BY PROFESSIONAL SERVICE, INCORPORATED HEREIN, ARE THE PROPERTY OF CDM SMITH AND ARE NOT TO BE USED, IN WHOLE OR PART, FOR ANY OTHER PROJECT WITHOUT THE WRITTEN AUTHORIZATION OF CDM SMITH.
N:\ACAD2008\los osos\01-sheets\PS\09-INS\ PS-I-101 04/10/12 10:41 rushmg XREFS: LosOsos-bdr, Co-cal

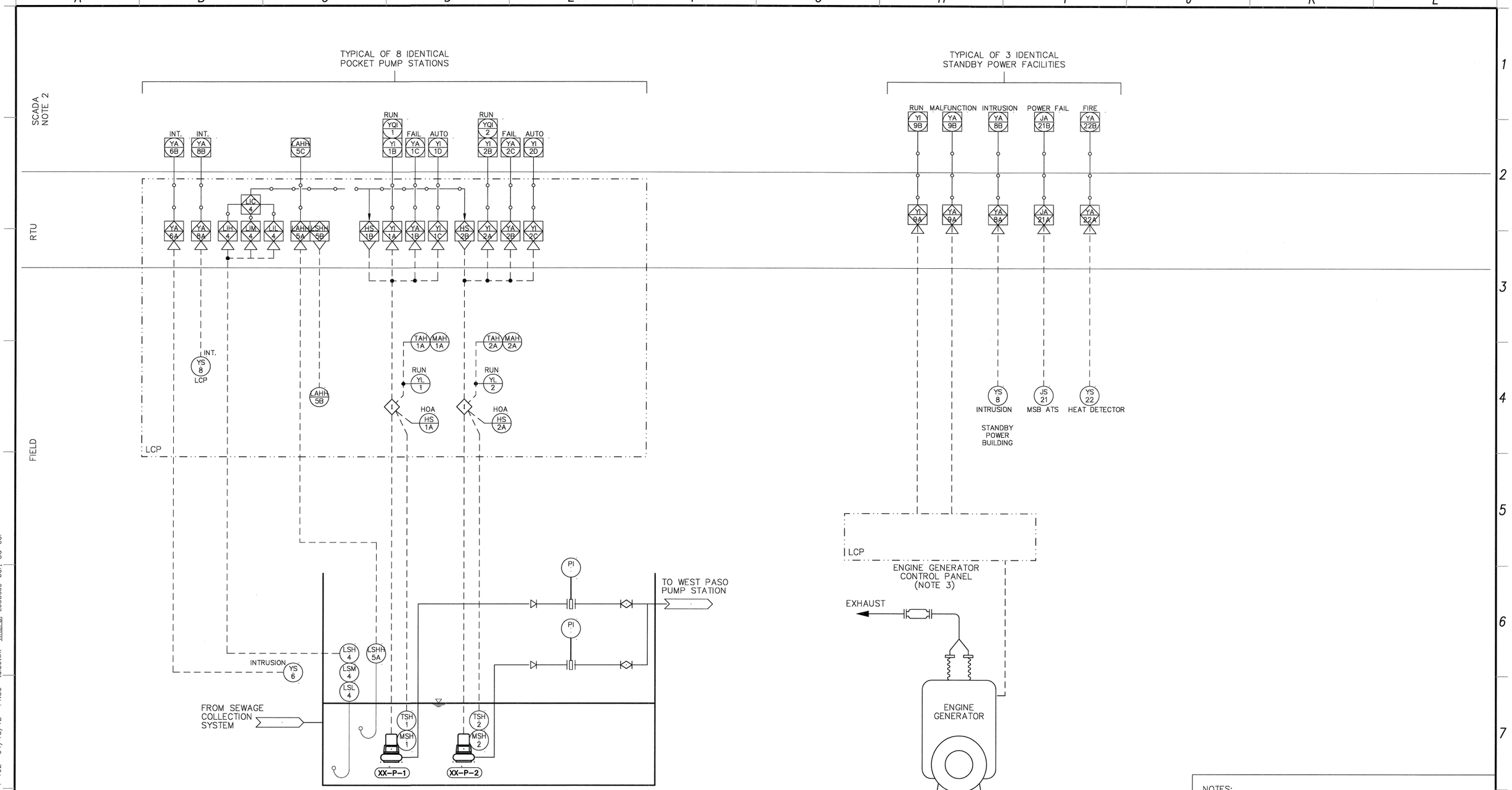

TYPICAL DUPLEX PUMP POCKET PUMP STATIONS

- 04A
- 07A
- 08A
- 09A
- 10A
- 11A
- 12A
- 13A

TYPICAL STANDBY POWER FACILITY

- WEST PASO/BAYWOOD (WPBWSP)
- EAST PASO (EPSP)
- EAST YSABEL (EYSP)

NOTES:

1. ALL TAG NUMBERS SHALL BE PREFIXED BY THE SITE ABBREVIATION.
2. WWTP SCADA DETAILS ARE SHOWN FOR GENERAL INFORMATION ONLY AND ARE NOT INCLUDED IN THIS PROJECT.
3. REFER TO ENGINE GENERATOR SPEC FOR DETAILS.

REV. NO.	DATE	DRWN	CHKD	REMARKS

DESIGNED BY: CAL
DRAWN BY: JAW
CHECKED BY: GNM
DATE: APRIL 2012

CDM Smith
2295 Gateway Oaks Drive, Suite 240
Sacramento, CA 95833
Tel: (916) 567-9900

0 1/2 1
IF THIS BAR DOES NOT MEASURE 1" THEN ADJUST SCALE ACCORDINGLY

REGISTERED PROFESSIONAL ENGINEER CHARLES M. LINDQUIST II No. E 8841 Exp. 3/31/2014 ELECTRICAL STATE OF CALIFORNIA

DIGALERT
DIAL TOLL FREE 1-800-642-2444 AT LEAST TWO DAYS BEFORE YOU DIG
UNDERGROUND SERVICE ALERT OF NORTHERN CALIFORNIA

LOS OSOS WASTEWATER COLLECTION SYSTEM
INSTRUMENTATION
AREA A PUMP STATIONS
P&ID-2

PROJECT NO.42502-83120
FILE NAME: PS-I-102
SHEET NO.
PS-I-102

©2012 CDM SMITH ALL RIGHTS RESERVED.
REUSE OF DOCUMENTS: THESE DOCUMENTS AND DESIGNS PROVIDED BY PROFESSIONAL SERVICE, INCORPORATED HEREIN, ARE THE PROPERTY OF CDM SMITH AND ARE NOT TO BE USED, IN WHOLE OR PART, FOR ANY OTHER PROJECT WITHOUT THE WRITTEN AUTHORIZATION OF CDM SMITH.
N:\ACAD2008\los osos\01-sheets\PS\09-INS\ PS-I-102 04/18/12 14:30 talbotwk XREFS: LosOsos-bdr Cg-cal

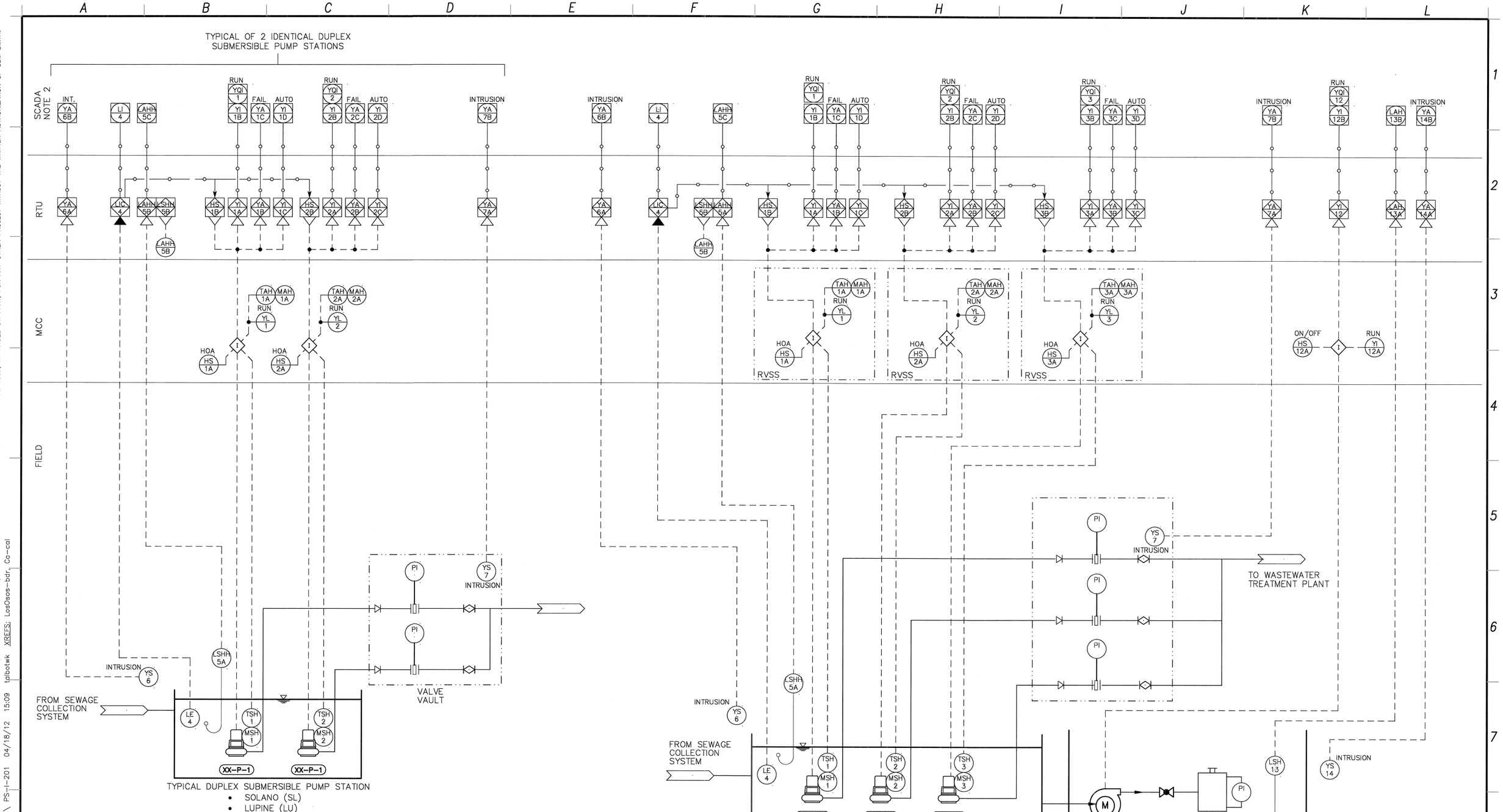

NOTES:

1. ALL TAG NUMBERS SHALL BE PREFIXED BY THE SITE ABBREVIATION.
2. WWTP SCADA DETAILS ARE SHOWN FOR GENERAL INFORMATION ONLY AND ARE NOT INCLUDED IN THIS PROJECT.

REV. NO.	DATE	DRWN	CHKD	REMARKS

DESIGNED BY: CAL
DRAWN BY: JAW
CHECKED BY: GNM
DATE: APRIL 2012

CDM Smith
2295 Gateway Oaks Drive, Suite 240
Sacramento, CA 95833
Tel: (916) 567-9900

0 1/2 1
IF THIS BAR DOES NOT MEASURE 1" THEN ADJUST SCALE ACCORDINGLY

REGISTERED PROFESSIONAL ENGINEER CHARLES A. LINDQUIST II No. E 8841 Exp. 3/31/2014 ELECTRICAL STATE OF CALIFORNIA

DIGALERT
DIAL TOLL FREE 1-800-642-2444
AT LEAST TWO DAYS BEFORE YOU DIG
UNDERGROUND SERVICE ALERT OF NORTHERN CALIFORNIA

LOS OSOS WASTEWATER COLLECTION SYSTEM
INSTRUMENTATION
AREA B PUMP STATIONS
P&ID-1

PROJECT NO. 42502-83120
FILE NAME: PS-I-201
SHEET NO.
PS-I-201

©2012 CDM SMITH ALL RIGHTS RESERVED.
REUSE OF DOCUMENTS: THESE DOCUMENTS AND DESIGNS PROVIDED BY PROFESSIONAL SERVICE, INCORPORATED HEREIN, ARE THE PROPERTY OF CDM SMITH AND ARE NOT TO BE USED, IN WHOLE OR PART, FOR ANY OTHER PROJECT WITHOUT THE WRITTEN AUTHORIZATION OF CDM SMITH.
N:\ACAD2008\los osos\01-sheets\PS\09-INS\ PS-I-201 04/18/12 15:09 talbotwk XREFS: LosOsos-bdr, Ca-cal

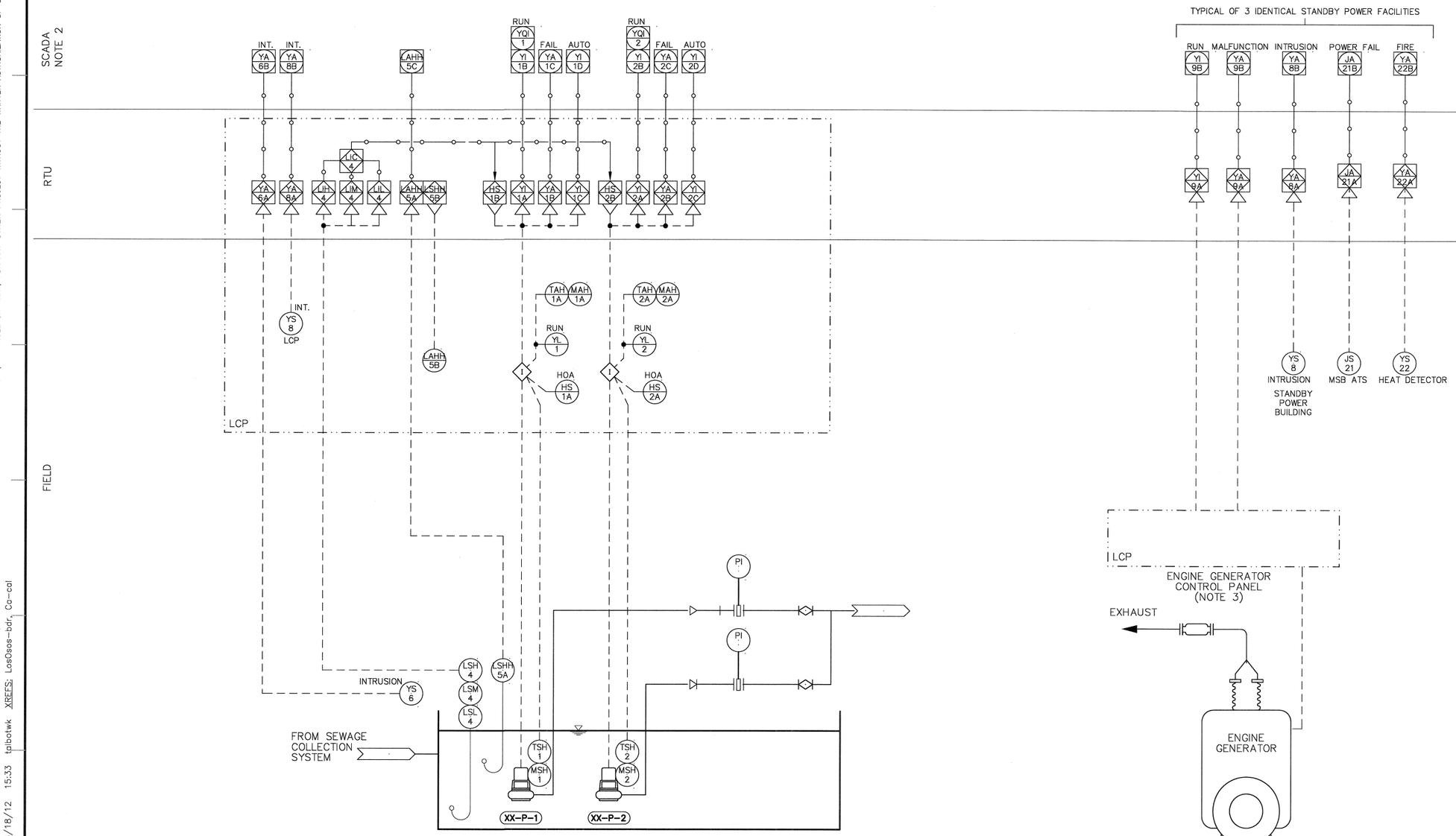

TYPICAL DUPLEX PUMP POCKET PUMP STATION
- 05A

TYPICAL STANDBY POWER FACILITY
- SOLANO (SLSP)
- LUPINE (LUSP)
- MIDTOWN (MTSP)

NOTES:

1. ALL TAG NUMBERS SHALL BE PREFIXED BY THE SITE ABBREVIATION.
2. WWTP SCADA DETAILS ARE SHOWN FOR GENERAL INFORMATION ONLY AND ARE NOT INCLUDED IN THIS PROJECT.
3. REFER TO ENGINE GENERATOR SPEC FOR DETAILS.

REV. NO.	DATE	DRWN	CHKD	REMARKS

DESIGNED BY: CAL
DRAWN BY: JAW
CHECKED BY: GNM
DATE: APRIL 2012

CDM Smith
2295 Gateway Oaks Drive, Suite 240
Sacramento, CA 95833
Tel: (916) 567-9900

0 1/2 1
IF THIS BAR DOES NOT MEASURE 1" THEN ADJUST SCALE ACCORDINGLY

REGISTERED PROFESSIONAL ENGINEER CHARLES E. LINDQUIST II No. E 8841 Exp. 3/31/2014 ELECTRICAL STATE OF CALIFORNIA

DIGALERT
DIAL TOLL FREE 1-800-642-2444
AT LEAST TWO DAYS BEFORE YOU DIG
UNDERGROUND SERVICE ALERT OF NORTHERN CALIFORNIA

LOS OSOS WASTEWATER COLLECTION SYSTEM
INSTRUMENTATION
AREA B PUMP STATIONS
P&ID-2

PROJECT NO. 42502-83120
FILE NAME: PS-I-202
SHEET NO.
PS-I-202

©2012 CDM SMITH ALL RIGHTS RESERVED.
REUSE OF DOCUMENTS: THESE DOCUMENTS AND DESIGNS PROVIDED BY PROFESSIONAL SERVICE, INCORPORATED HEREIN, ARE THE PROPERTY OF CDM SMITH AND ARE NOT TO BE USED, IN WHOLE OR PART, FOR ANY OTHER PROJECT WITHOUT THE WRITTEN AUTHORIZATION OF CDM SMITH.
N:\ACAD2008\los osos\01-sheets\PS\09-INS\ PS-I-202 04/18/12 15:33 talbotwk XREFS: LosOsos-bdr, Co-cal

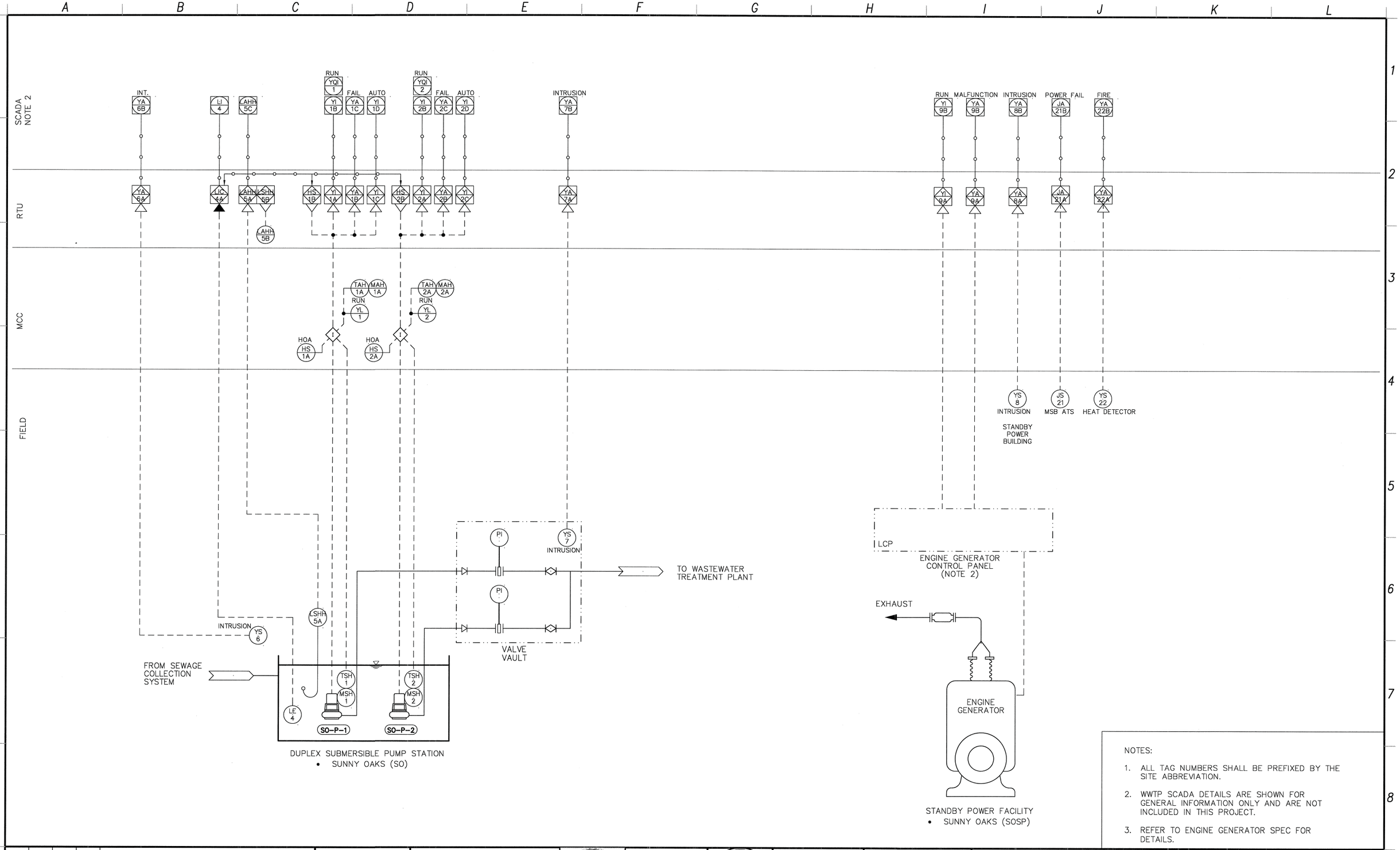

NOTES:

1. ALL TAG NUMBERS SHALL BE PREFIXED BY THE SITE ABBREVIATION.
2. WWTP SCADA DETAILS ARE SHOWN FOR GENERAL INFORMATION ONLY AND ARE NOT INCLUDED IN THIS PROJECT.
3. REFER TO ENGINE GENERATOR SPEC FOR DETAILS.

REV. NO.	DATE	DRWN	CHKD	REMARKS

DESIGNED BY: CAL
DRAWN BY: JAW
CHECKED BY: GNM
DATE: APRIL 2012

CDM Smith
2295 Gateway Oaks Drive, Suite 240
Sacramento, CA 95833
Tel: (916) 567-9900

0 1/2 1
IF THIS BAR DOES NOT MEASURE 1" THEN ADJUST SCALE ACCORDINGLY

REGISTERED PROFESSIONAL ENGINEER CHARLES A. LINDQUIST II No. E 8841 Exp. 3/31/2014 ELECTRICAL STATE OF CALIFORNIA 4/24/12

DIGALERT
DIAL TOLL FREE 1-800-642-2444
AT LEAST TWO DAYS BEFORE YOU DIG
UNDERGROUND SERVICE ALERT OF NORTHERN CALIFORNIA

LOS OSOS WASTEWATER COLLECTION SYSTEM
INSTRUMENTATION AREA C PUMP STATION P&ID

PROJECT NO. 42502-83120
FILE NAME: PS-I-301
SHEET NO.
PS-I-301

©2012 CDM SMITH ALL RIGHTS RESERVED.
REUSE OF DOCUMENTS: THESE DOCUMENTS AND DESIGNS PROVIDED BY PROFESSIONAL SERVICE, INCORPORATED HEREIN, ARE THE PROPERTY OF CDM SMITH AND ARE NOT TO BE USED, IN WHOLE OR PART, FOR ANY OTHER PROJECT WITHOUT THE WRITTEN AUTHORIZATION OF CDM SMITH.
N:\ACAD2008\los osos\01-sheets\PS\09-INS\ PS-I-301 04/18/12 15:42 talbotwk XREFS: LosOsos-bdr, Ca-cal

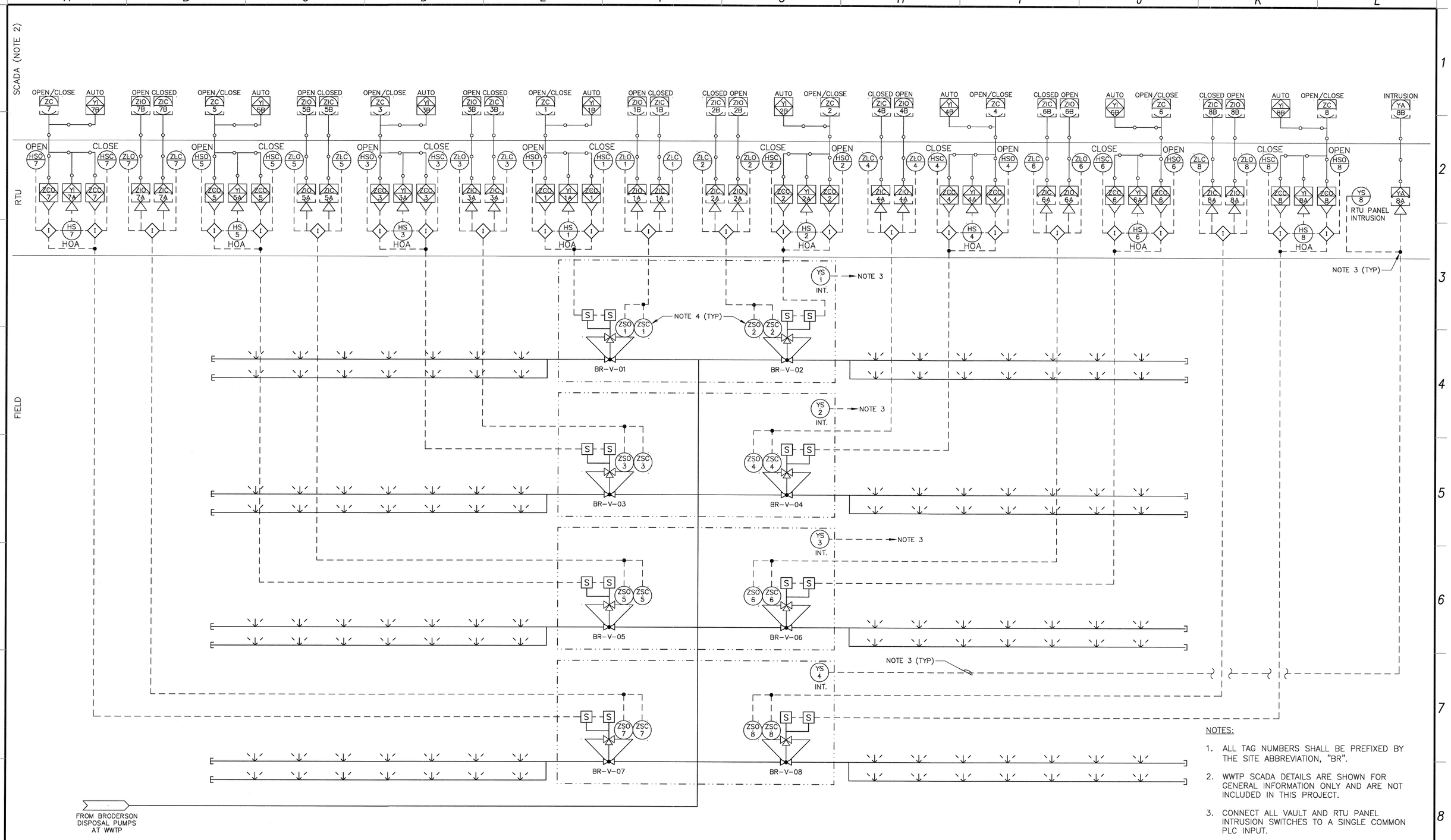

NOTES:

1. ALL TAG NUMBERS SHALL BE PREFIXED BY THE SITE ABBREVIATION, "BR".
2. WWTP SCADA DETAILS ARE SHOWN FOR GENERAL INFORMATION ONLY AND ARE NOT INCLUDED IN THIS PROJECT.
3. CONNECT ALL VAULT AND RTU PANEL INTRUSION SWITCHES TO A SINGLE COMMON PLC INPUT.
4. VALVES AND APPURTENANCES (SOLENOIDS & LIMIT SWITCHES) ARE EXISTING.

REV. NO.	DATE	DRWN	CHKD	REMARKS

DESIGNED BY: CAL
DRAWN BY: JAW
CHECKED BY: GNM
DATE: APRIL 2012

CDM Smith
2295 Gateway Oaks Drive, Suite 240
Sacramento, CA 95833
Tel: (916) 567-9900

0 1/2 1
IF THIS BAR DOES NOT MEASURE 1" THEN ADJUST SCALE ACCORDINGLY

DIGALERT
DIAL TOLL FREE 1-800-642-2444
AT LEAST TWO DAYS BEFORE YOU DIG
UNDERGROUND SERVICE ALERT OF NORTHERN CALIFORNIA

LOS OSOS WASTEWATER COLLECTION SYSTEM

INSTRUMENTATION AREA C BRODERSON EFFLUENT DISPOSAL SITE P&ID

PROJECT NO.42502-83120
FILE NAME: PS-I-302
SHEET NO.
PS-I-302

©2012 CDM SMITH ALL RIGHTS RESERVED.
REUSE OF DOCUMENTS: THESE DOCUMENTS AND DESIGNS PROVIDED BY PROFESSIONAL SERVICE, INCORPORATED HEREIN, ARE THE PROPERTY OF CDM SMITH AND ARE NOT TO BE USED, IN WHOLE OR PART, FOR ANY OTHER PROJECT WITHOUT THE WRITTEN AUTHORIZATION OF CDM SMITH.
N:\ACAD2008\los osos\01-sheets\PS\09-INS\ PS-I-302 04/23/12 12:43 weinerja XREFS: LosOsos-bdr, Cg-cal

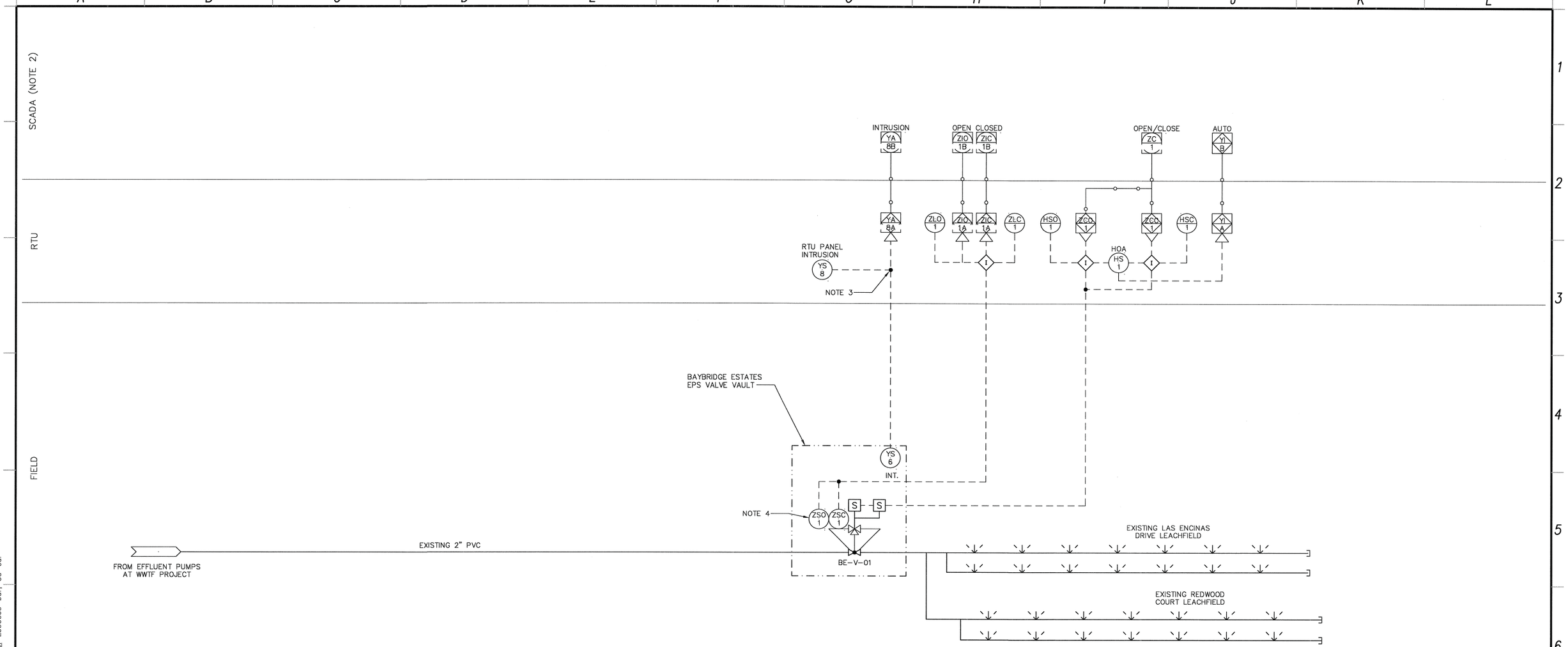

NOTES:

1. ALL TAG NUMBERS SHALL BE PREFIXED BY THE SITE ABBREVIATION, "BE".
2. WWTP SCADA DETAILS ARE SHOWN FOR GENERAL INFORMATION ONLY AND ARE NOT INCLUDED IN THIS PROJECT.
3. CONNECT VAULT AND RTU PANEL INTRUSION SWITCHES TO A SINGLE COMMON PLC INPUT.
4. VALVE AND APPURTENANCES (SOLENOIDS & LIMIT SWITCHES ARE EXISTING.

REV. NO.	DATE	DRWN	CHKD	REMARKS

DESIGNED BY: CAL
DRAWN BY: JAW
CHECKED BY: GNM
DATE: APRIL 2012

CDM Smith
2295 Gateway Oaks Drive, Suite 240
Sacramento, CA 95833
Tel: (916) 567-9900

0 1/2 1
IF THIS BAR DOES NOT MEASURE 1" THEN ADJUST SCALE ACCORDINGLY

REGISTERED PROFESSIONAL ENGINEER CHARLES LINDSAY II No. E 6841 Exp. 3/31/2014 ELECTRICAL STATE OF CALIFORNIA 7/24/12

DIGALERT
DIAL TOLL FREE 1-800-642-2444
AT LEAST TWO DAYS BEFORE YOU DIG
UNDERGROUND SERVICE ALERT OF NORTHERN CALIFORNIA

LOS OSOS WASTEWATER COLLECTION SYSTEM
INSTRUMENTATION AREA C BAYRIDGE ESTATES EFFLUENT DISPOSAL SITE P&ID

PROJECT NO. 42502-83120
FILE NAME: PS-I-303
SHEET NO.
PS-I-303

©2012 CDM SMITH ALL RIGHTS RESERVED.
REUSE OF DOCUMENTS: THESE DOCUMENTS AND DESIGNS PROVIDED BY PROFESSIONAL SERVICE, INCORPORATED HEREIN, ARE THE PROPERTY OF CDM SMITH AND ARE NOT TO BE USED, IN WHOLE OR PART, FOR ANY OTHER PROJECT WITHOUT THE WRITTEN AUTHORIZATION OF CDM SMITH.
N:\ACAD2008\los osos\01-sheets\PS\09-INS\ PS-I-303 04/23/12 10:45 rushma XREFS: LosOsos-bdr, Ca-cal

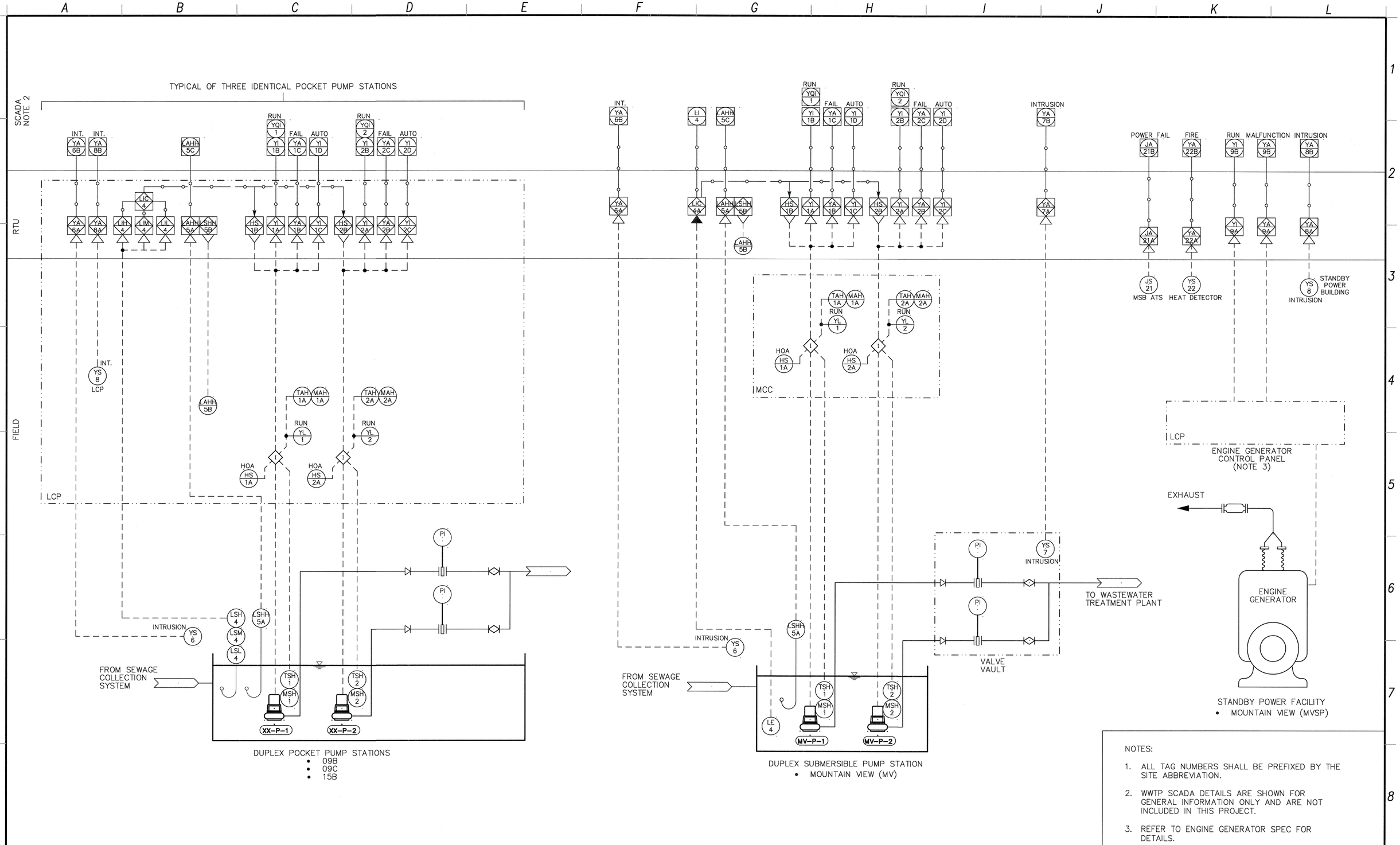

NOTES:

1. ALL TAG NUMBERS SHALL BE PREFIXED BY THE SITE ABBREVIATION.
2. WWTP SCADA DETAILS ARE SHOWN FOR GENERAL INFORMATION ONLY AND ARE NOT INCLUDED IN THIS PROJECT.
3. REFER TO ENGINE GENERATOR SPEC FOR DETAILS.

REV. NO.	DATE	DRWN	CHKD	REMARKS

DESIGNED BY: CAL
DRAWN BY: JAW
CHECKED BY: GNM
DATE: APRIL 2012

CDM Smith
2295 Gateway Oaks Drive, Suite 240
Sacramento, CA 95833
Tel: (916) 567-9900

0 1/2 1
IF THIS BAR DOES NOT MEASURE 1" THEN ADJUST SCALE ACCORDINGLY

REGISTERED PROFESSIONAL ENGINEER CHARLES A. LINDQUIST II No. E 8841 Exp. 3/31/2014 ELECTRICAL STATE OF CALIFORNIA

DIGALERT
DIAL TOLL FREE 1-800-642-2444
AT LEAST TWO DAYS BEFORE YOU DIG
UNDERGROUND SERVICE ALERT OF NORTHERN CALIFORNIA

LOS OSOS WASTEWATER COLLECTION SYSTEM
INSTRUMENTATION AREA D PUMP STATIONS P&ID

PROJECT NO. 42502-83120
FILE NAME: PS-I-401
SHEET NO.
PS-I-401

©2012 CDM SMITH ALL RIGHTS RESERVED.
REUSE OF DOCUMENTS: THESE DOCUMENTS AND DESIGNS PROVIDED BY PROFESSIONAL SERVICE, INCORPORATED HEREIN, ARE THE PROPERTY OF CDM SMITH AND ARE NOT TO BE USED, IN WHOLE OR PART, FOR ANY OTHER PROJECT WITHOUT THE WRITTEN AUTHORIZATION OF CDM SMITH.
N:\ACAD2008\los osos\01-sheets\PS\09-INS\ PS-I-401 04/18/12 15:58 talbotwk XREFS: LosOsos-bdr, Ca-cal