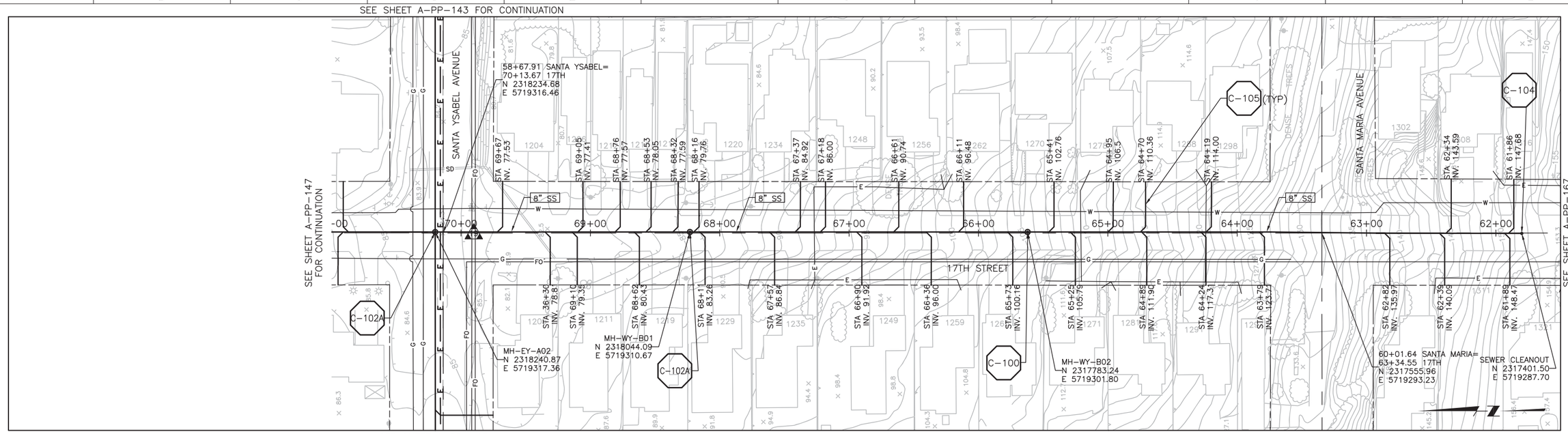

PLAN ON 17TH STREET

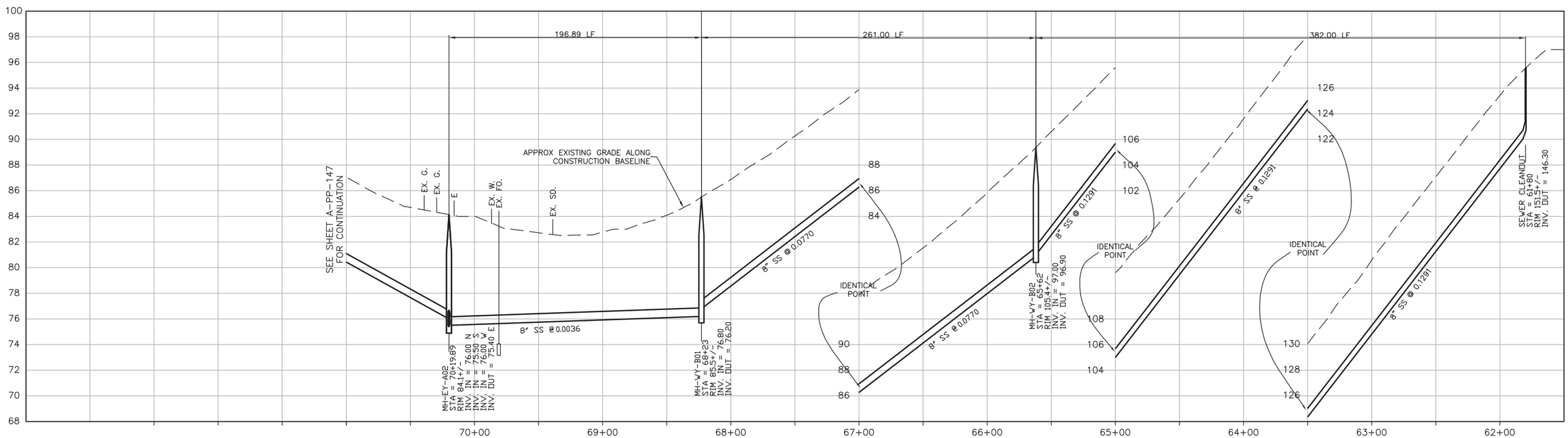

PROFILE ON 17TH STREET

SCALE:
HORZ: 1"=40'
VERT: 1"=4'

REV. NO.	DATE	DRWN	CHKD	REMARKS

DESIGNED BY: GLM
DRAWN BY: SHS
CHECKED BY: GLM
DATE: March 12, 2012

CDM Smith
2295 Gateway Oaks Drive, Suite 240
Sacramento, CA 95833
Tel: (916) 567-9900

0 1/2 1
IF THIS BAR DOES NOT MEASURE 1" THEN ADJUST SCALE ACCORDINGLY

REGISTERED PROFESSIONAL ENGINEER
GERALD L. MICHEL
No. 36895
CIVIL
STATE OF CALIFORNIA

rrmdesigngroup
creating environments people enjoy®

DIGALERT
DIAL TOLL FREE
1-800-642-2444
AT LEAST TWO DAYS BEFORE YOU DIG
UNDERGROUND SERVICE ALERT OF NORTHERN CALIFORNIA

LOS OSOS WASTEWATER COLLECTION SYSTEM
PLAN AND PROFILE
17TH STREET
STA 61+80 TO STA 70+19.89

PROJECT NO.42502-83120
FILE NAME: A-PP-146.dwg
SHEET NO.
A-PP-146

SEE SHEET A-PP-143 FOR CONTINUATION

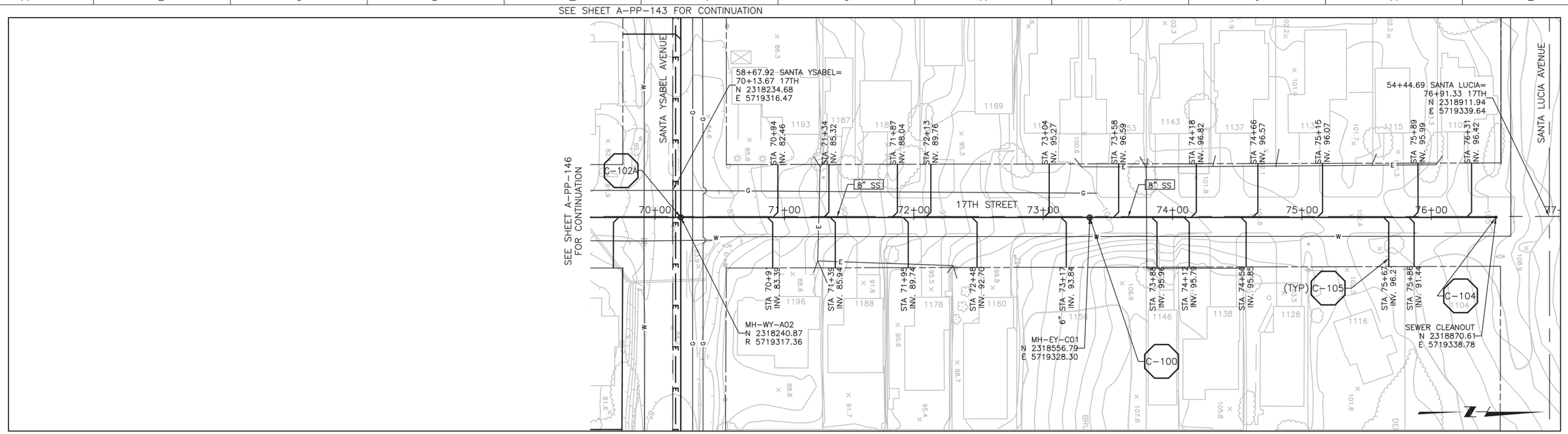

SEE SHEET A-PP-143
FOR CONTINUATION

PLAN ON 17TH STREET

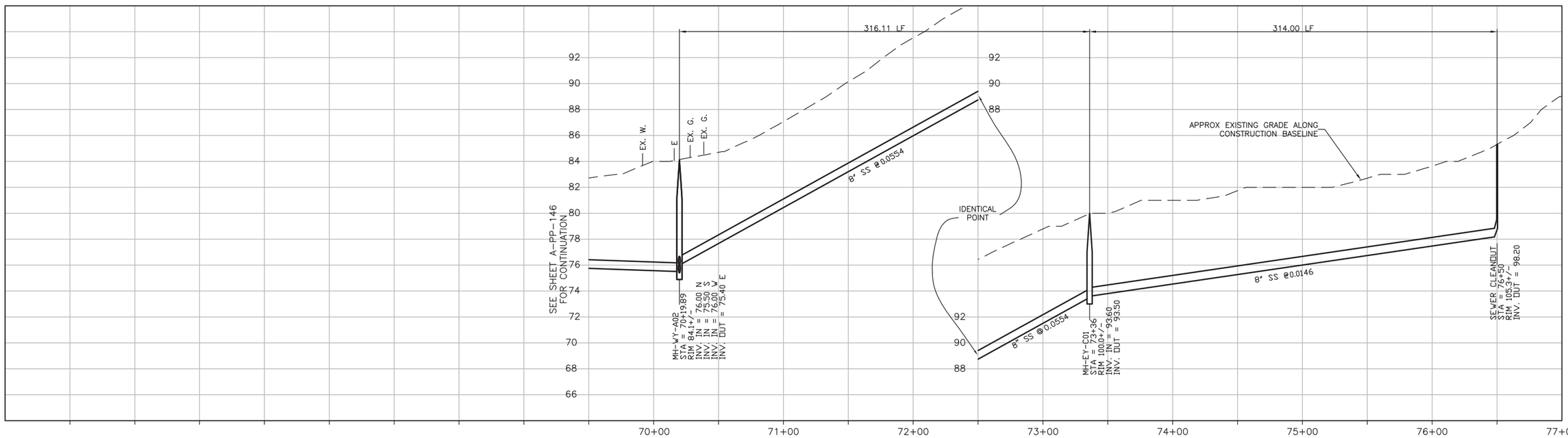

CONSTRUCTION
BASELINE
STATION

PROFILE ON 17TH STREET

SCALE:
HORZ: 1"=40'
VERT: 1"=4'

REV. NO.	DATE	DRWN	CHKD	REMARKS

DESIGNED BY: GLM
DRAWN BY: SHS
CHECKED BY: GLM
DATE: March 12, 2012

CDM Smith
2295 Gateway Oaks Drive, Suite 240
Sacramento, CA 95833
Tel: (916) 567-9900

0 1/2 1
IF THIS BAR DOES NOT MEASURE 1" THEN ADJUST SCALE ACCORDINGLY

REGISTERED PROFESSIONAL ENGINEER
GERALD L. MICHEL
No. 36895
CIVIL
STATE OF CALIFORNIA

rrmdesigngroup
creating environments people enjoy®

DIGALERT
DIAL TOLL FREE
1-800-642-2444
AT LEAST TWO DAYS BEFORE YOU DIG
UNDERGROUND SERVICE ALERT OF NORTHERN CALIFORNIA

LOS OSOS WASTEWATER COLLECTION SYSTEM
PLAN AND PROFILE
17TH STREET
STA 70+19.89 STO STA 76+50

PROJECT NO.42502-83120
FILE NAME: A-PP-147.dwg
SHEET NO.
A-PP-147

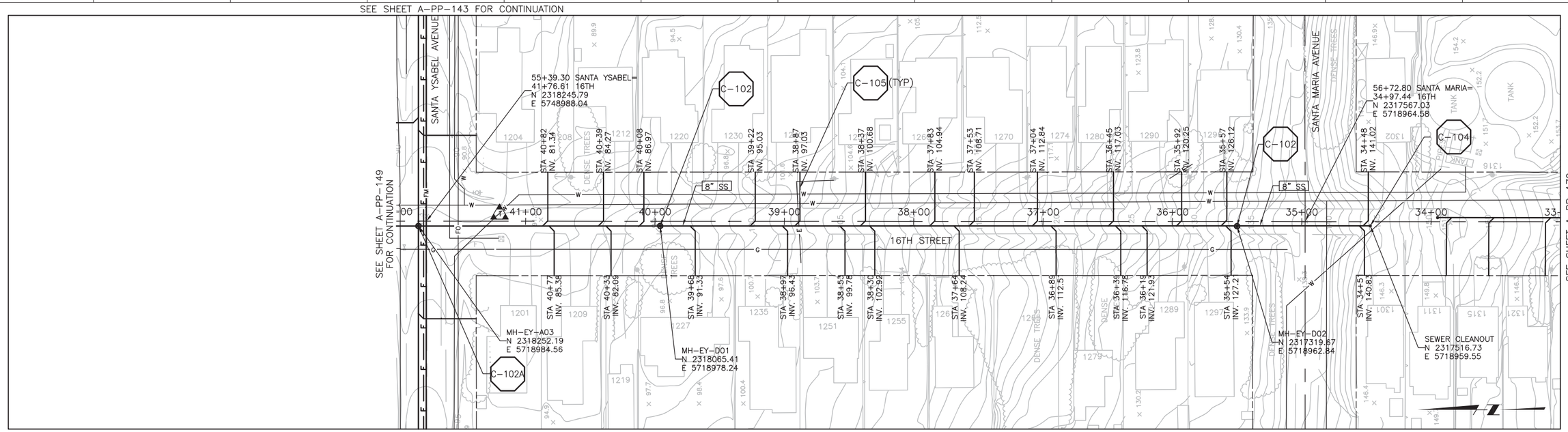

PLAN ON 16TH STREET

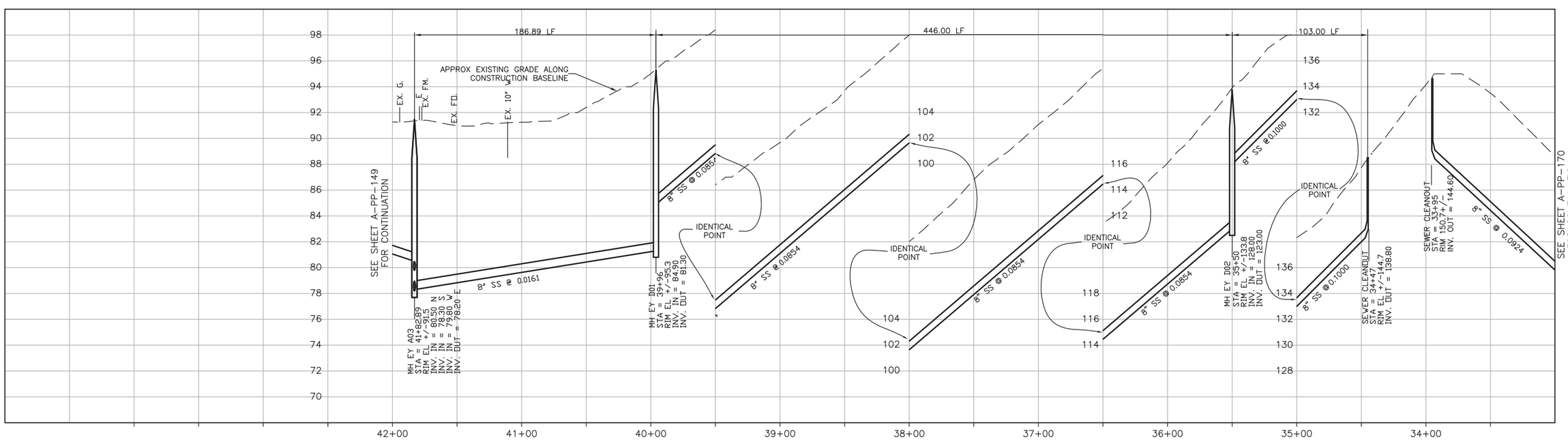

CONSTRUCTION BASELINE STATION

PROFILE ON 16TH STREET

SCALE:
HORZ: 1"=40'
VERT: 1"=4'

REV. NO.	DATE	DRWN	CHKD	REMARKS

DESIGNED BY: GLM
DRAWN BY: SHS
CHECKED BY: GLM
DATE: March 12, 2012

CDM Smith
2295 Gateway Oaks Drive, Suite 240
Sacramento, CA 95833
Tel: (916) 567-9900

0 1/2 1
IF THIS BAR DOES NOT MEASURE 1" THEN ADJUST SCALE ACCORDINGLY

REGISTERED PROFESSIONAL ENGINEER GERALD L. WICK No. 36895 CIVIL STATE OF CALIFORNIA

rrmdesigngroup
creating environments people enjoy®

DIGALERT
DIAL TOLL FREE 1-800-642-2444
AT LEAST TWO DAYS BEFORE YOU DIG
UNDERGROUND SERVICE ALERT OF NORTHERN CALIFORNIA

LOS OSOS WASTEWATER COLLECTION SYSTEM
PLAN AND PROFILE
16TH STREET
STA 34+42 TO STA 41+82.89

PROJECT NO.42502-83120
FILE NAME: A-PP-148.dwg
SHEET NO.
A-PP-148

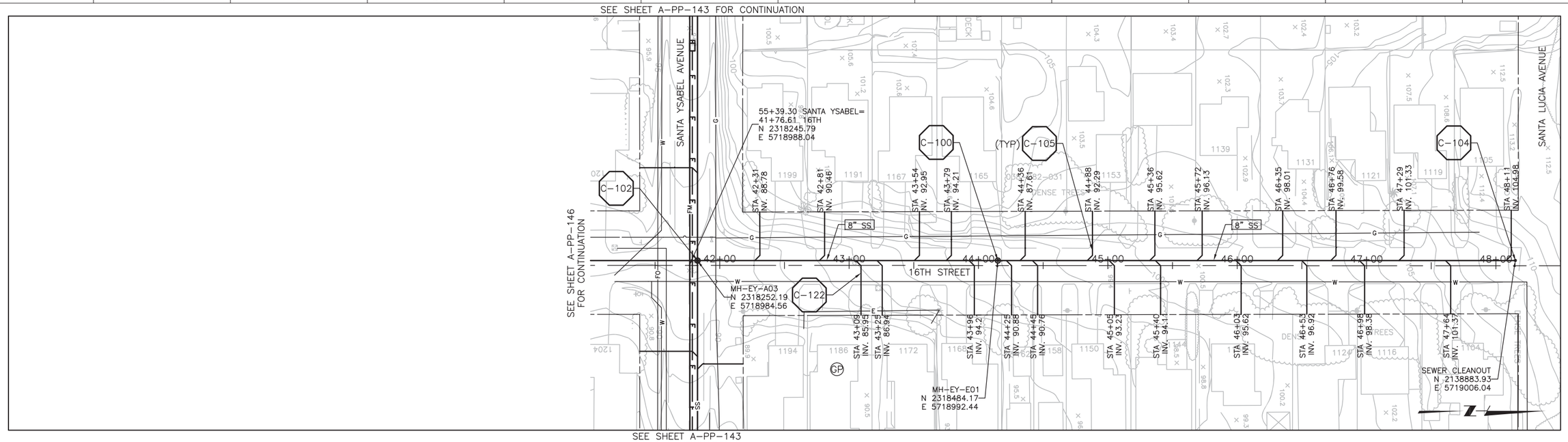

PLAN ON 16TH STREET

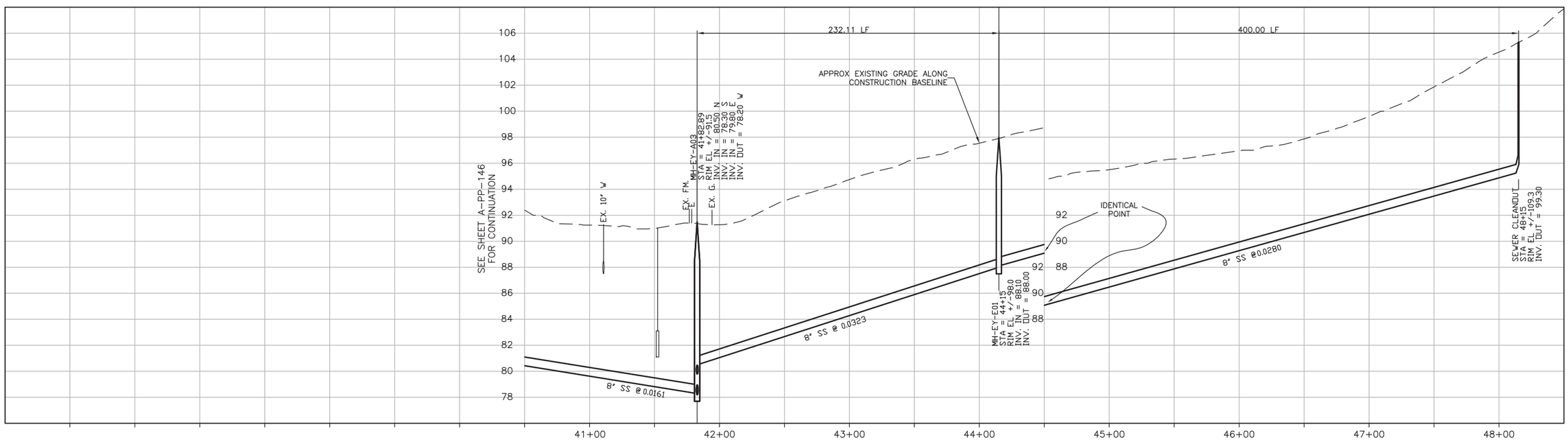

PROFILE ON 16TH STREET

SCALE:
HORZ: 1"=40'
VERT: 1"=4'

REV. NO.	DATE	DRWN	CHKD	REMARKS

DESIGNED BY: GLM
DRAWN BY: SHS
CHECKED BY: GLM
DATE: March 12, 2012

CDM Smith
2295 Gateway Oaks Drive, Suite 240
Sacramento, CA 95833
Tel: (916) 567-9900

0 1/2 1
IF THIS BAR DOES NOT MEASURE 1" THEN ADJUST SCALE ACCORDINGLY

REGISTERED PROFESSIONAL ENGINEER GERALD L. VICE No. 36895 CIVIL STATE OF CALIFORNIA

rrmdesigngroup
creating environments people enjoy®

DIGALERT
DIAL TOLL FREE
1-800-642-2444
AT LEAST TWO DAYS BEFORE YOU DIG
UNDERGROUND SERVICE ALERT OF NORTHERN CALIFORNIA

LOS OSOS WASTEWATER COLLECTION SYSTEM
PLAN AND PROFILE
16TH STREET
STA 41+82.89 TO STA 48+15

PROJECT NO.42502-83120
FILE NAME: A-PP-149.dwg
SHEET NO.
A-PP-149

SEE SHEET A-PP-144 FOR CONTINUATION

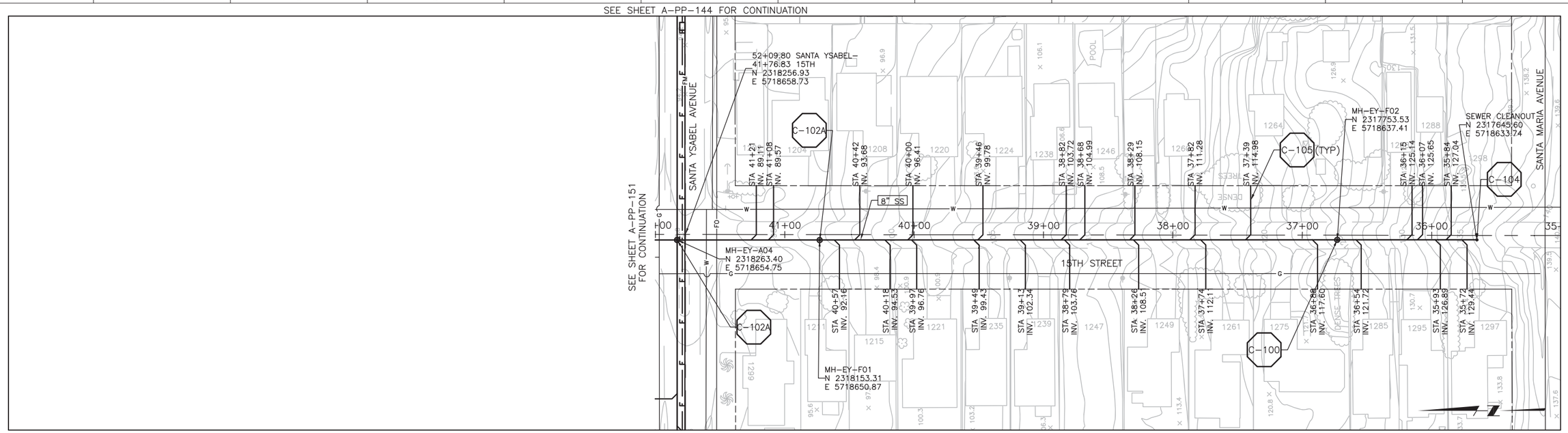

SEE SHEET A-PP-144 FOR CONTINUATION

PLAN ON 15TH STREET

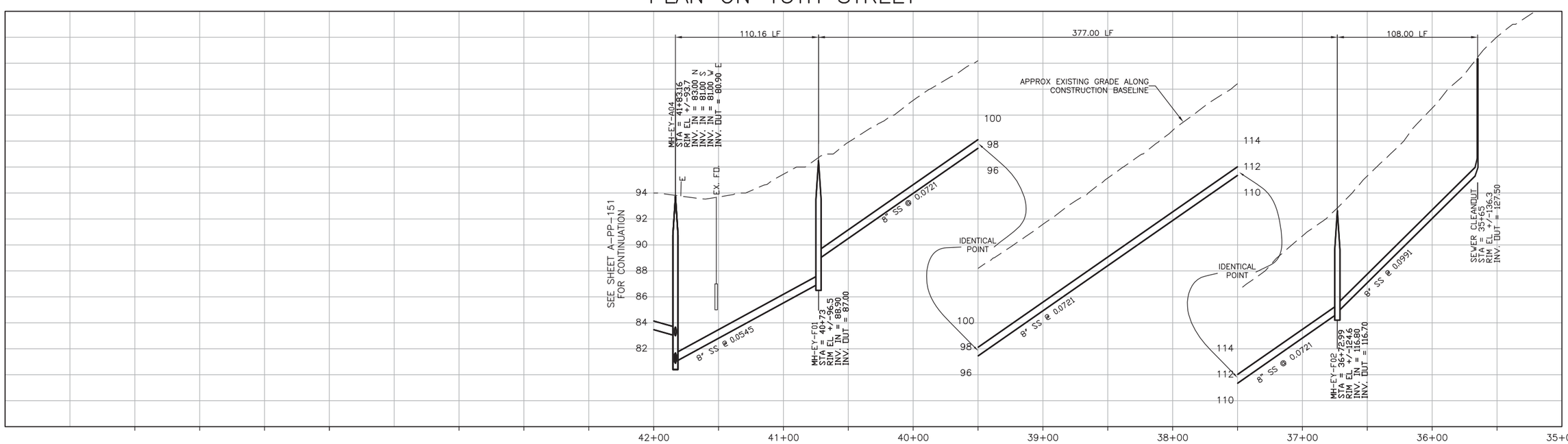

CONSTRUCTION BASELINE STATION

PROFILE ON 15TH STREET

SCALE:
HORZ: 1"=40'
VERT: 1"=4'

REV. NO.	DATE	DRWN	CHKD	REMARKS

DESIGNED BY: GLM
DRAWN BY: SHS
CHECKED BY: GLM
DATE: March 12, 2012

CDM Smith
2295 Gateway Oaks Drive, Suite 240
Sacramento, CA 95833
Tel: (916) 567-9900

0 1/2 1
IF THIS BAR DOES NOT MEASURE 1" THEN ADJUST SCALE ACCORDINGLY

REGISTERED PROFESSIONAL ENGINEER
GERALD L. MIGUEL
No. 36895
CIVIL
STATE OF CALIFORNIA

rrmdesigngroup
creating environments people enjoy®

DIGALERT
DIAL TOLL FREE
1-800-642-2444
AT LEAST TWO DAYS BEFORE YOU DIG
UNDERGROUND SERVICE ALERT OF NORTHERN CALIFORNIA

LOS OSOS WASTEWATER COLLECTION SYSTEM
PLAN AND PROFILE
15TH STREET
STA 35+65 TO STA 41+83.16

PROJECT NO.42502-83120
FILE NAME: A-PP-150.dwg
SHEET NO.
A-PP-150

SEE SHEET A-PP-143 FOR CONTINUATION

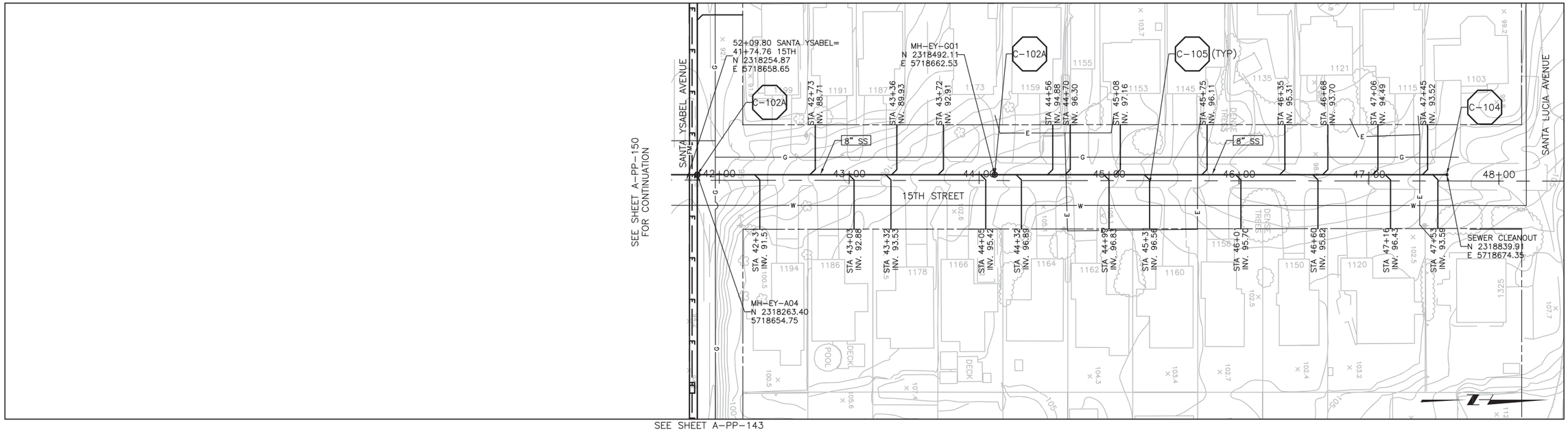

SEE SHEET A-PP-143 FOR CONTINUATION

PLAN ON 15TH STREET

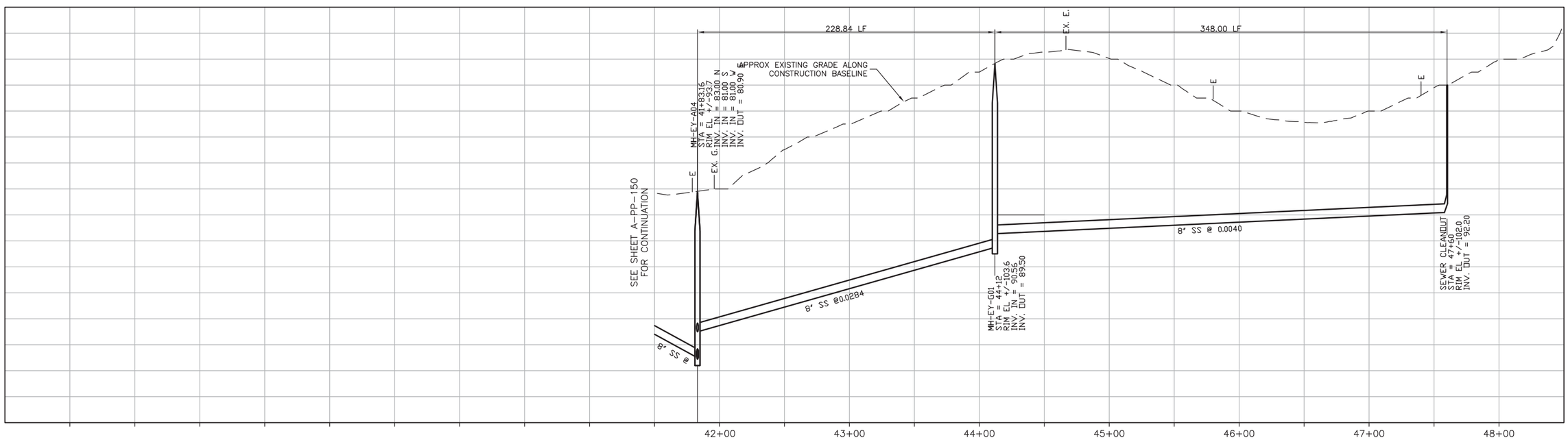

PROFILE ON 15TH STREET

SCALE:
HORZ: 1"=40'
VERT: 1"=4'

REV. NO.	DATE	DRWN	CHKD	REMARKS

DESIGNED BY: GLM
DRAWN BY: SHS
CHECKED BY: GLM
DATE: March 12, 2012

CDM Smith
2295 Gateway Oaks Drive, Suite 240
Sacramento, CA 95833
Tel: (916) 567-9900

0 1/2 1
IF THIS BAR DOES NOT MEASURE 1" THEN ADJUST SCALE ACCORDINGLY

REGISTERED PROFESSIONAL ENGINEER GERALD L. MICKEY No. 36895 CIVIL STATE OF CALIFORNIA

rrmdesigngroup creating environments people enjoy®

DIGALERT DIAL TOLL FREE 1-800-642-2444 AT LEAST TWO DAYS BEFORE YOU DIG
UNDERGROUND SERVICE ALERT OF NORTHERN CALIFORNIA

LOS OSOS WASTEWATER COLLECTION SYSTEM
PLAN AND PROFILE
15TH STREET
STA 41+83.16 TO STA 47+60

PROJECT NO.42502-83120
FILE NAME: A-PP-151.dwg
SHEET NO.
A-PP-151

SEE SHEET A-PP-144 FOR CONTINUATION

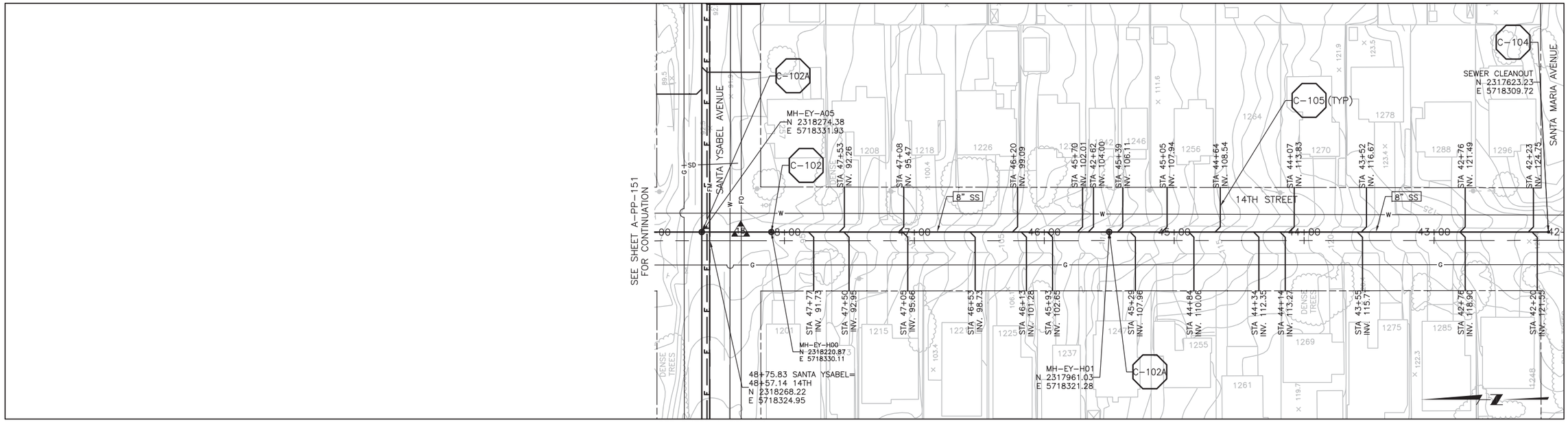

SEE SHEET A-PP-144 FOR CONTINUATION

PLAN ON 14TH STREET

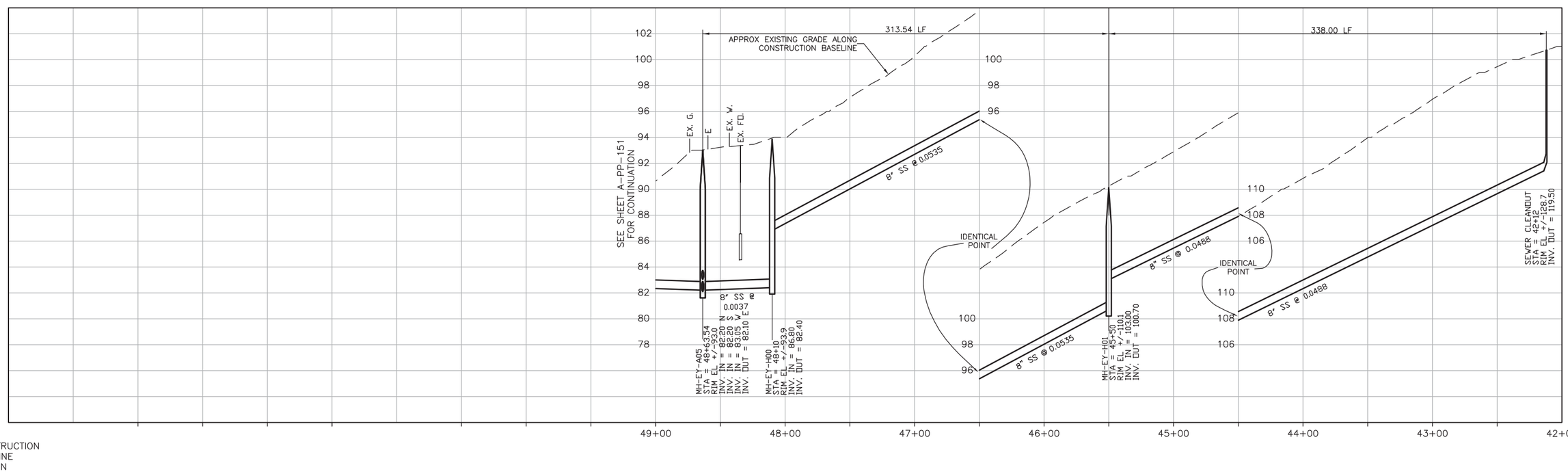

CONSTRUCTION BASELINE STATION

PROFILE ON 14TH STREET

SCALE:
HORZ: 1"=40'
VERT: 1"=4'

REV. NO.	DATE	DRWN	CHKD	REMARKS

DESIGNED BY: GLM
DRAWN BY: SHS
CHECKED BY: GLM
DATE: March 12, 2012

CDM Smith
2295 Gateway Oaks Drive, Suite 240
Sacramento, CA 95833
Tel: (916) 567-9900

0 1/2 1
IF THIS BAR DOES NOT MEASURE 1" THEN ADJUST SCALE ACCORDINGLY

REGISTERED PROFESSIONAL ENGINEER GERALD L. MICHEL No. 36895 CIVIL STATE OF CALIFORNIA

rrmdesigngroup creating environments people enjoy®

DIGALERT
DIAL TOLL FREE 1-800-642-2444
AT LEAST TWO DAYS BEFORE YOU DIG
UNDERGROUND SERVICE ALERT OF NORTHERN CALIFORNIA

LOS OSOS WASTEWATER COLLECTION SYSTEM
PLAN AND PROFILE
14TH STREET
STA 42+12 TO STA 48+63.54

PROJECT NO.42502-83120
FILE NAME: A-PP-152.dwg
SHEET NO.
A-PP-152

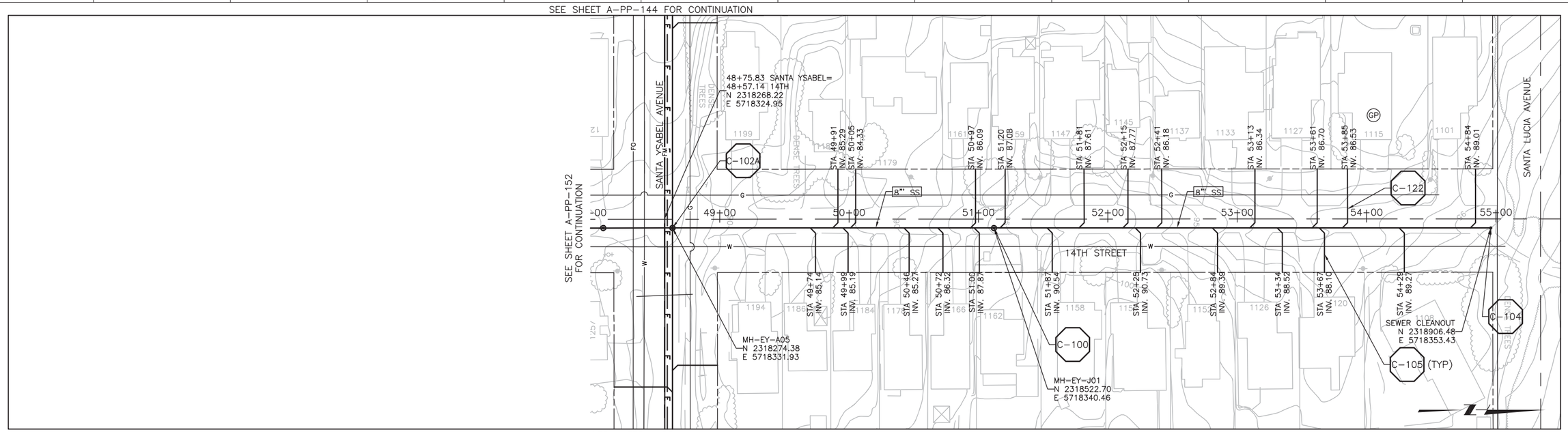

PLAN ON 14TH STREET

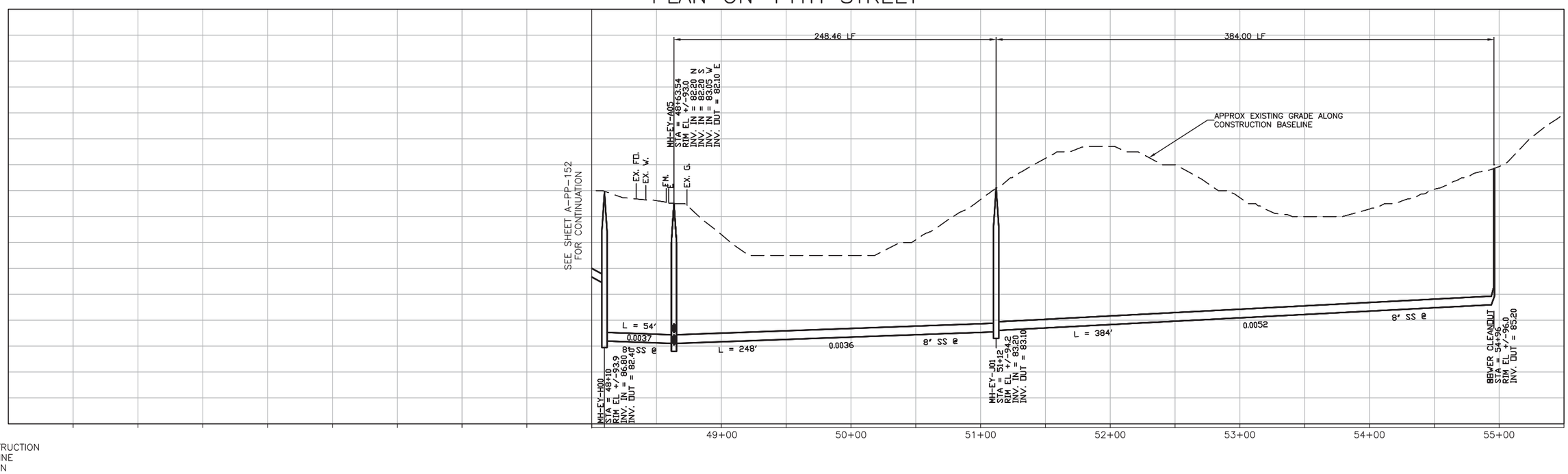

PROFILE ON 14TH STREET

SCALE:
HORZ: 1"=40'
VERT: 1"=4'

REV. NO.	DATE	DRWN	CHKD	REMARKS

DESIGNED BY: GLM
DRAWN BY: SHS
CHECKED BY: GLM
DATE: March 12, 2012

CDM Smith
2295 Gateway Oaks Drive, Suite 240
Sacramento, CA 95833
Tel: (916) 567-9900

0 1/2 1
IF THIS BAR DOES NOT MEASURE 1" THEN ADJUST SCALE ACCORDINGLY

REGISTERED PROFESSIONAL ENGINEER
GERALD L. MICHEL
No. 36895
CIVIL
STATE OF CALIFORNIA

rrmdesigngroup
creating environments people enjoy®

DIGALERT
DIAL TOLL FREE
1-800-642-2444
AT LEAST TWO DAYS BEFORE YOU DIG
UNDERGROUND SERVICE ALERT OF NORTHERN CALIFORNIA

LOS OSOS WASTEWATER COLLECTION SYSTEM
PLAN AND PROFILE
14TH STREET
STA 48+63.54 TO STA 54+96

PROJECT NO.42502-83120
FILE NAME: A-PP-153.dwg
SHEET NO.
A-PP-153

SEE SHEET A-PP-144 FOR CONTINUATION

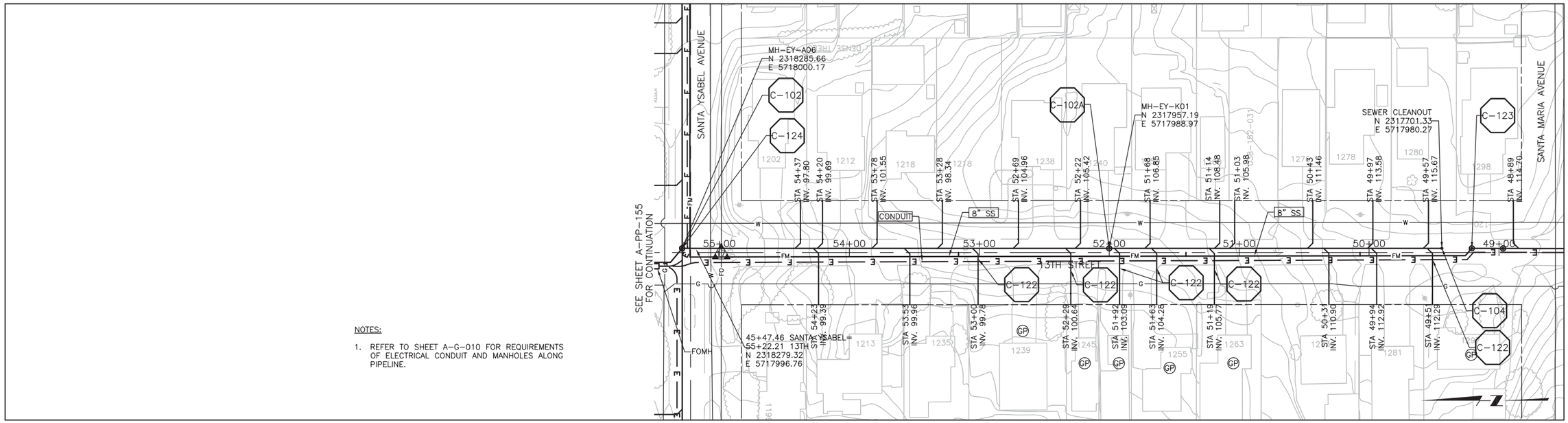

NOTES:

1. REFER TO SHEET A-G-010 FOR REQUIREMENTS OF ELECTRICAL CONDUIT AND MANHOLES ALONG PIPELINE.

SEE SHEET A-PP-144 FOR CONTINUATION

PLAN ON 13TH STREET

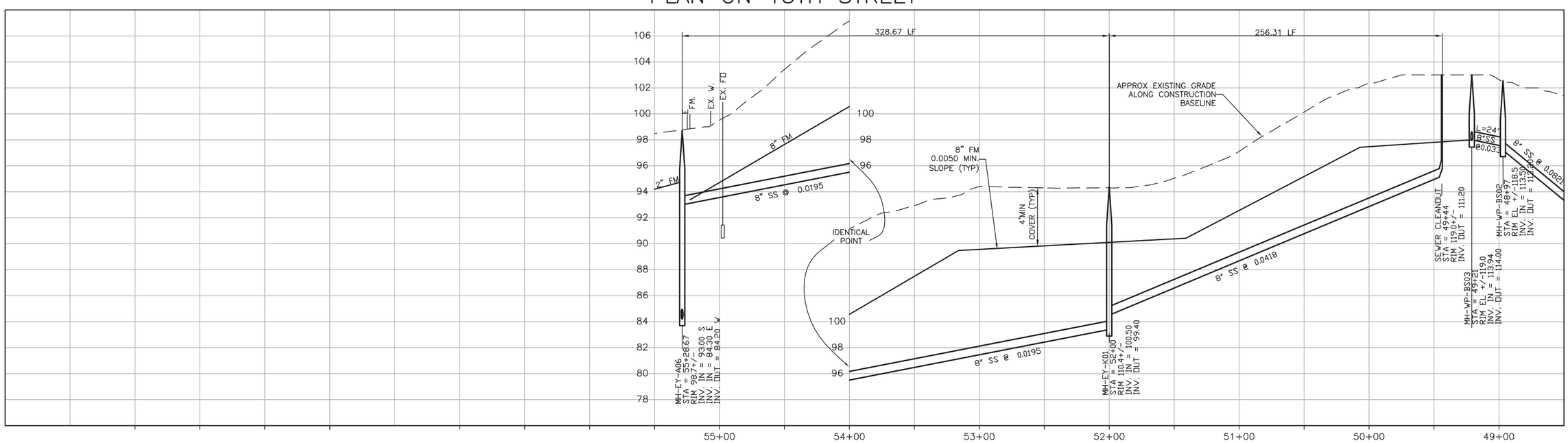

CONSTRUCTION BASELINE STATION

PROFILE ON 13TH STREET

SCALE:
HORZ: 1"=40'
VERT: 1"=4'

REV. NO.	DATE	DRWN	CHKD	REMARKS

DESIGNED BY: GLM
DRAWN BY: SHS
CHECKED BY: GLM
DATE: March 12, 2012

CDM Smith
2295 Gateway Oaks Drive, Suite 240
Sacramento, CA 95833
Tel: (916) 567-9900

0 1/2 1
IF THIS BAR DOES NOT MEASURE 1" THEN ADJUST SCALE ACCORDINGLY

REGISTERED PROFESSIONAL ENGINEER
GERALD L. NICOLL
No. 36895
CIVIL
STATE OF CALIFORNIA

rrmdesigngroup
creating environments people enjoy®

DIGALERT
DIAL TOLL FREE
1-800-642-2444
AT LEAST TWO DAYS BEFORE YOU DIG
UNDERGROUND SERVICE ALERT OF NORTHERN CALIFORNIA

LOS OSOS WASTEWATER COLLECTION SYSTEM
PLAN AND PROFILE
13TH STREET
STA 49+44 TO STA 55+28.67

PROJECT NO.42502-83120
FILE NAME: A-PP-154.dwg
SHEET NO.
A-PP-154

SEE SHEET A-PP-144 FOR CONTINUATION

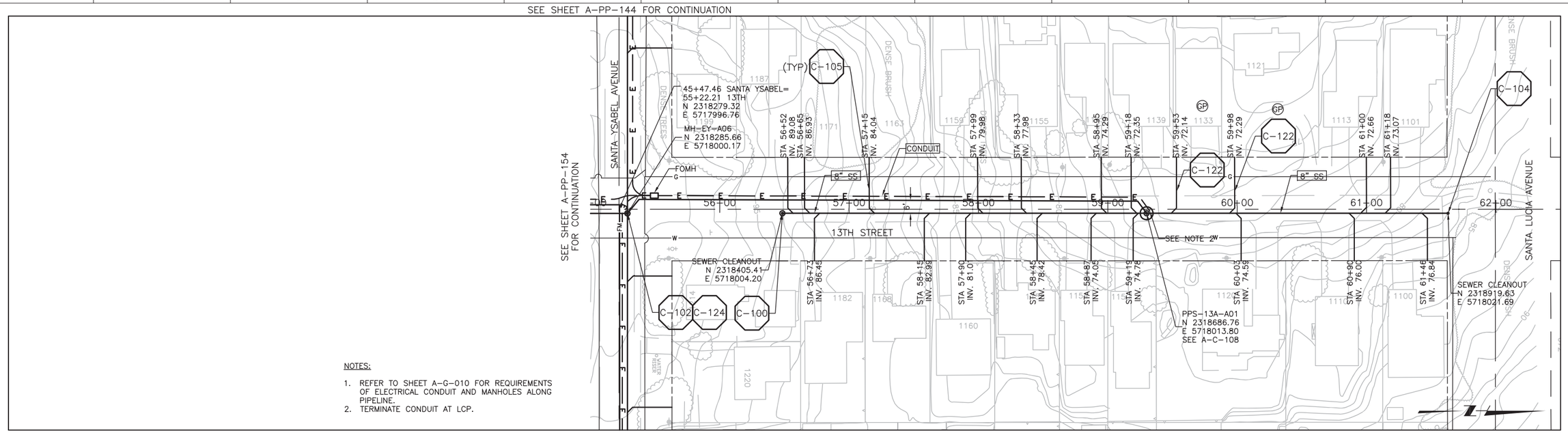

NOTES:

1. REFER TO SHEET A-G-010 FOR REQUIREMENTS OF ELECTRICAL CONDUIT AND MANHOLES ALONG PIPELINE.
2. TERMINATE CONDUIT AT LCP.

SEE SHEET A-PP-144 FOR CONTINUATION

PLAN ON 13TH STREET

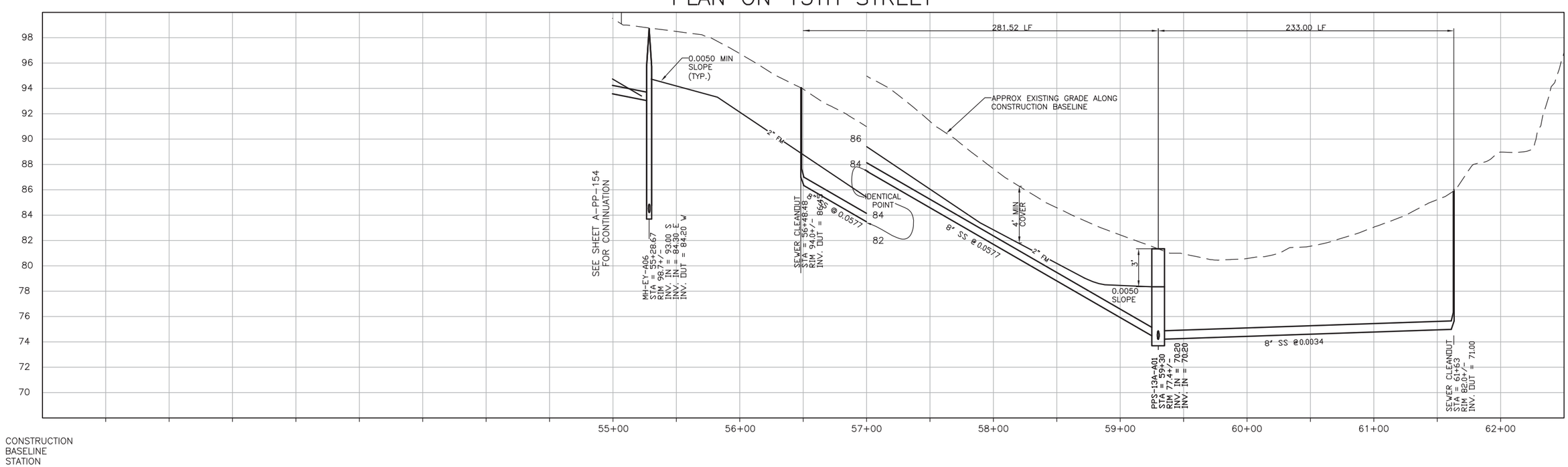

PROFILE ON 13TH STREET

SCALE:
HORZ: 1"=40'
VERT: 1"=4'

REV. NO.	DATE	DRWN	CHKD	REMARKS

DESIGNED BY: GLM
DRAWN BY: SHS
CHECKED BY: GLM
DATE: March 12, 2012

CDM Smith
2295 Gateway Oaks Drive, Suite 240
Sacramento, CA 95833
Tel: (916) 567-9900

0 1/2 1
IF THIS BAR DOES NOT MEASURE 1" THEN ADJUST SCALE ACCORDINGLY

REGISTERED PROFESSIONAL ENGINEER GERALD L. MICHEL No. 36895 CIVIL STATE OF CALIFORNIA

rrmdesigngroup
creating environments people enjoy®

DIGALERT
DIAL TOLL FREE
1-800-642-2444
AT LEAST TWO DAYS BEFORE YOU DIG
UNDERGROUND SERVICE ALERT OF NORTHERN CALIFORNIA

LOS OSOS WASTEWATER COLLECTION SYSTEM
PLAN AND PROFILE
13TH STREET
STA 55+25.67 TO STA 61+63

PROJECT NO.42502-83120
FILE NAME: A-PP-155.dwg
SHEET NO.
A-PP-155

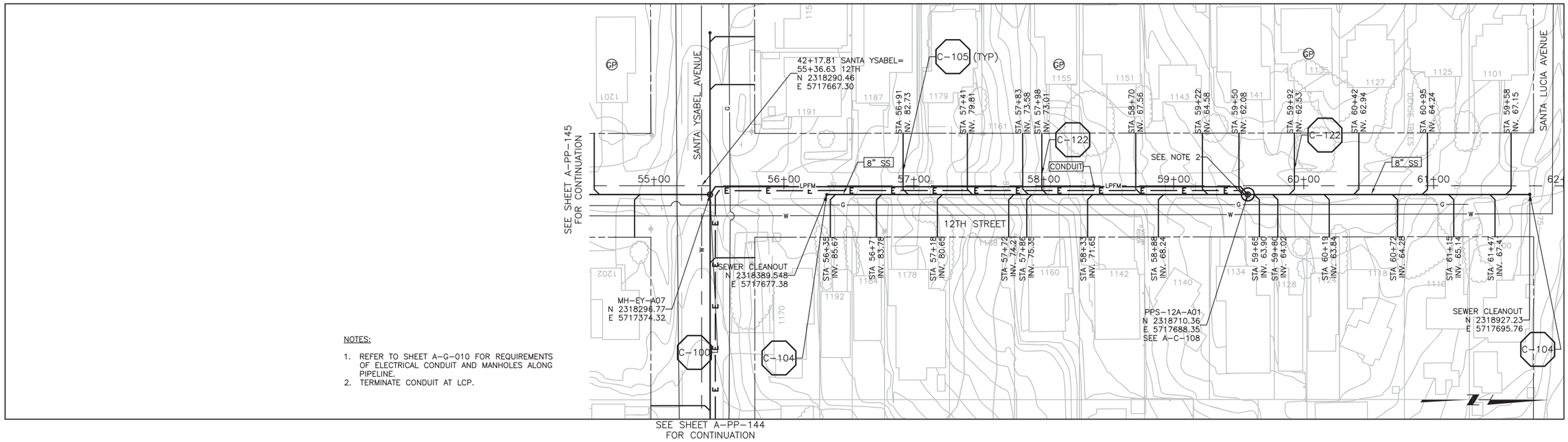

NOTES:

1. REFER TO SHEET A-G-010 FOR REQUIREMENTS OF ELECTRICAL CONDUIT AND MANHOLES ALONG PIPELINE.
2. TERMINATE CONDUIT AT LCP.

PLAN ON 12TH STREET

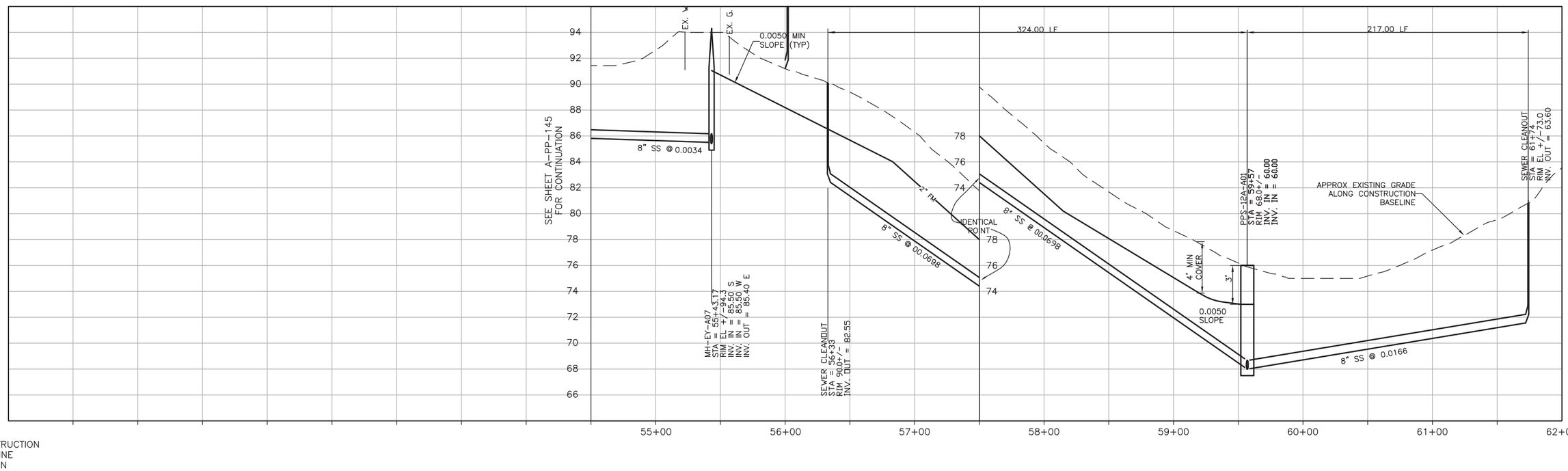

PROFILE ON 12TH STREET

SCALE:
HORZ: 1"=40'
VERT: 1"=4'

REV. NO.	DATE	DRWN	CHKD	REMARKS

DESIGNED BY: GLM
DRAWN BY: SHS
CHECKED BY: GLM
DATE: March 12, 2012

CDM Smith
2295 Gateway Oaks Drive, Suite 240
Sacramento, CA 95833
Tel: (916) 567-9900

0 1/2 1
IF THIS BAR DOES NOT MEASURE 1" THEN ADJUST SCALE ACCORDINGLY

REGISTERED PROFESSIONAL ENGINEER GERALD L. WICE No. 36895 CIVIL STATE OF CALIFORNIA

rrmdesigngroup
creating environments people enjoy®

DIGALERT
DIAL TOLL FREE
1-800-642-2444
AT LEAST TWO DAYS BEFORE YOU DIG
UNDERGROUND SERVICE ALERT OF NORTHERN CALIFORNIA

LOS OSOS WASTEWATER COLLECTION SYSTEM
PLAN AND PROFILE 12TH STREET STA 55+43.17 TO STA 61+74

PROJECT NO.42502-83120
FILE NAME: A-PP-156.dwg
SHEET NO.
A-PP-156

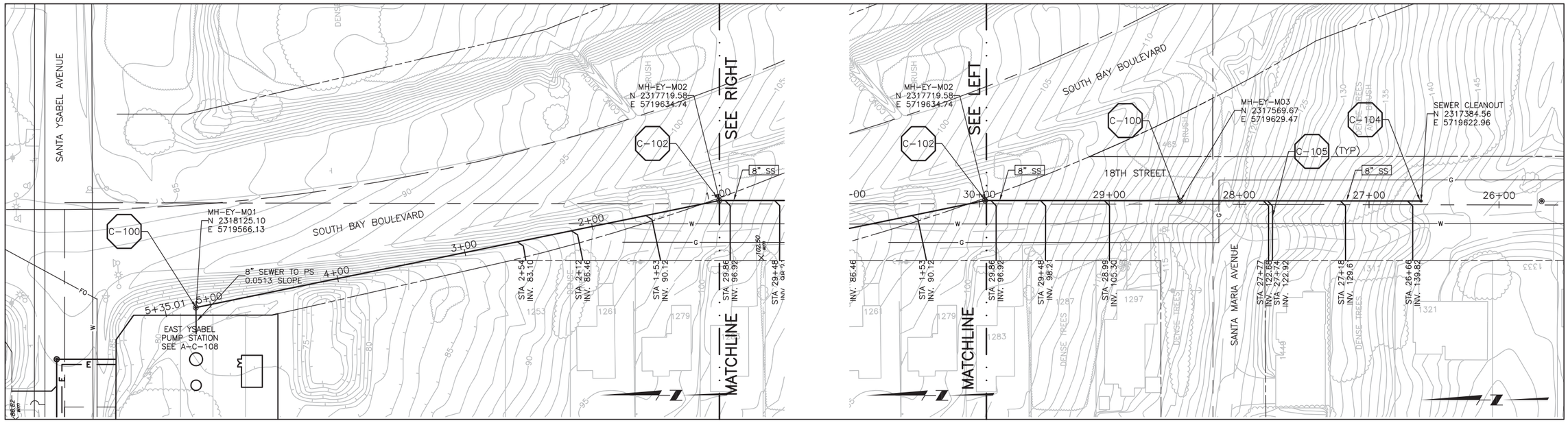

PLAN ON 18TH STREET

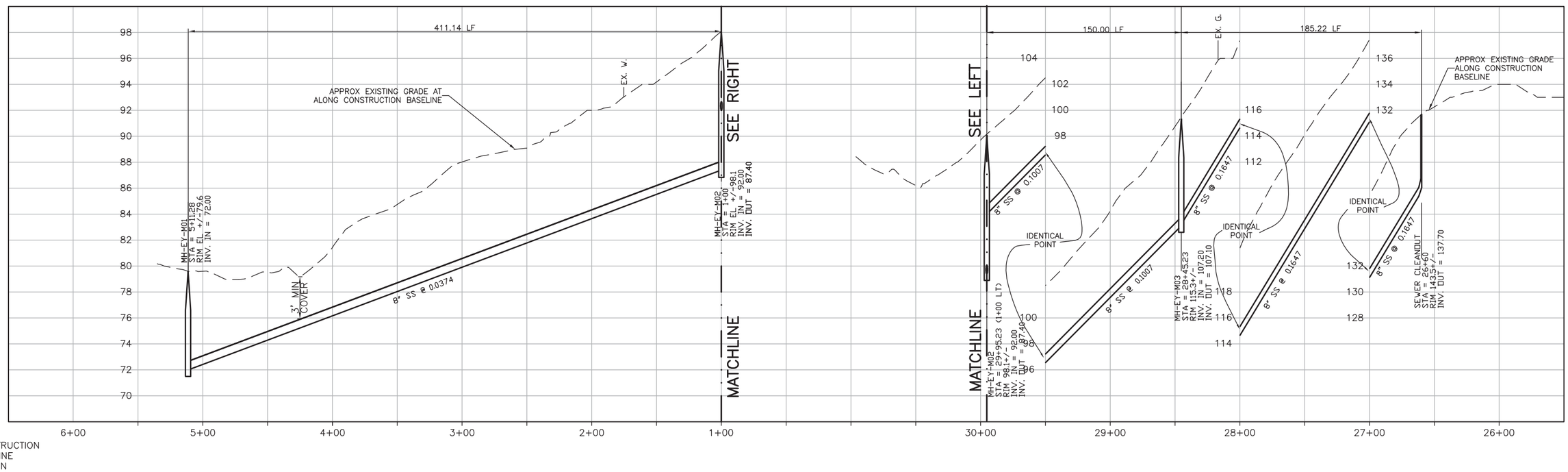

CONSTRUCTION
BASELINE
STATION

PROFILE ON 18TH STREET

SCALE:
HORZ: 1"=40'
VERT: 1"=4'

REV. NO.	DATE	DRWN	CHKD	REMARKS

DESIGNED BY: GLM
DRAWN BY: SHS
CHECKED BY: GLM
DATE: March 12, 2012

CDM Smith
2295 Gateway Oaks Drive, Suite 240
Sacramento, CA 95833
Tel: (916) 567-9900

0 1/2 1
IF THIS BAR DOES NOT MEASURE 1" THEN ADJUST SCALE ACCORDINGLY

REGISTERED PROFESSIONAL ENGINEER
GERALD L. NICOLL
No. 36895
CIVIL
STATE OF CALIFORNIA

rrmdesigngroup
creating environments people enjoy®

DIGALERT
DIAL TOLL FREE
1-800-642-2444
AT LEAST TWO DAYS BEFORE YOU DIG
UNDERGROUND SERVICE ALERT OF NORTHERN CALIFORNIA

LOS OSOS WASTEWATER COLLECTION SYSTEM
PLAN AND PROFILE
18TH STREET, 1+00 TO 5+11.28
26+60 TO 29+95.23

PROJECT NO.42502-83120
FILE NAME: A-PP-157.dwg
SHEET NO.
A-PP-157

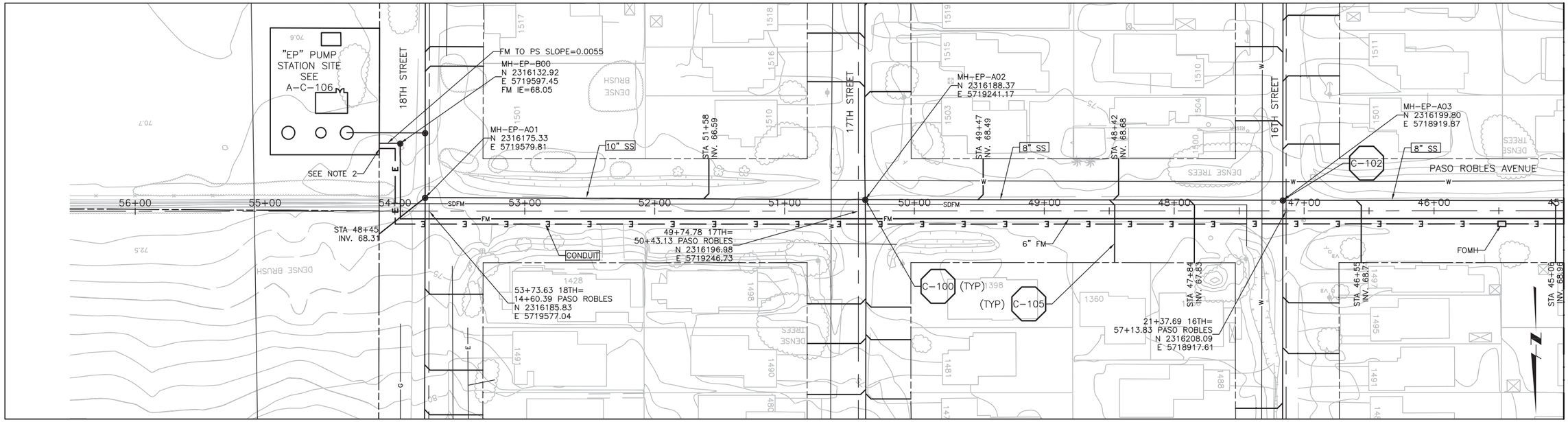

PLAN ON PASO ROBLES AVENUE

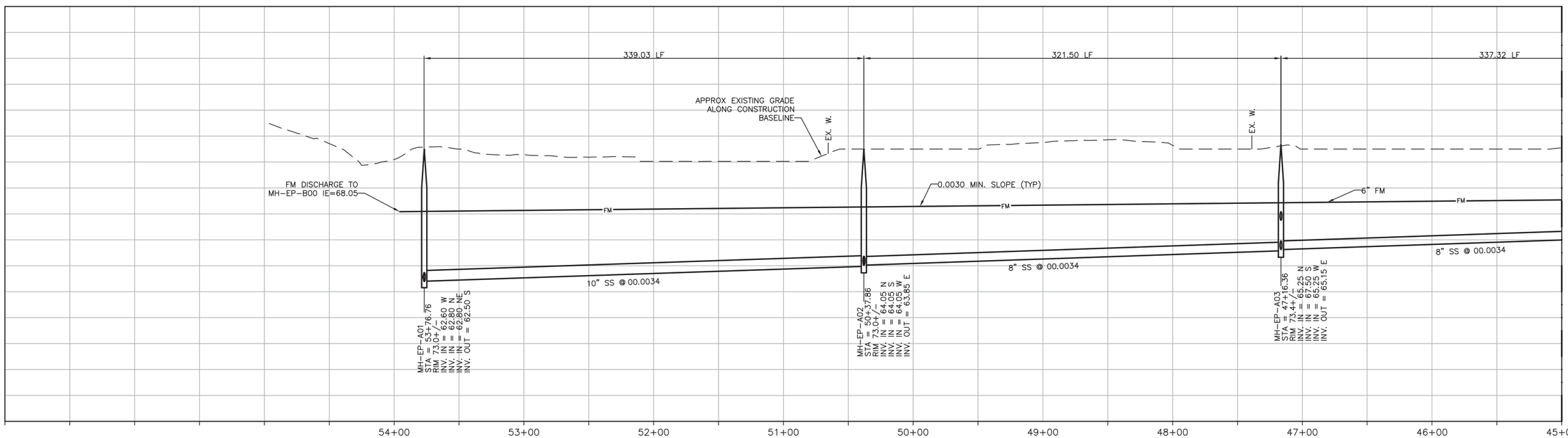

NOTES:

1. REFER TO SHEET A-G-010 FOR REQUIREMENTS OF ELECTRICAL CONDUIT AND MANHOLES ALONG PIPELINE.
2. TERMINATE CONDUIT @ PROPERTY LINE

PROFILE ON PASO ROBLES AVENUE

SCALE:
HORZ: 1"=40'
VERT: 1"=4'

REV. NO.	DATE	DRWN	CHKD	REMARKS

DESIGNED BY: GLM
DRAWN BY: SHS
CHECKED BY: GLM
DATE: March 12, 2012

CDM Smith
2295 Gateway Oaks Drive, Suite 240
Sacramento, CA 95833
Tel: (916) 567-9900

0 1/2 1
IF THIS BAR DOES NOT MEASURE 1" THEN ADJUST SCALE ACCORDINGLY

REGISTERED PROFESSIONAL ENGINEER GERALD L. RICE No. 36895 CIVIL STATE OF CALIFORNIA

rrmdesigngroup creating environments people enjoy®

DIGALERT
DIAL TOLL FREE 1-800-642-2444 AT LEAST TWO DAYS BEFORE YOU DIG
UNDERGROUND SERVICE ALERT OF NORTHERN CALIFORNIA

LOS OSOS WASTEWATER COLLECTION SYSTEM
PLAN AND PROFILE
PASO ROBLES STREET
STA 45+00 TO STA 53+76.76

PROJECT NO.42502-83120
FILE NAME: A-PP-158.dwg
SHEET NO.
A-PP-158

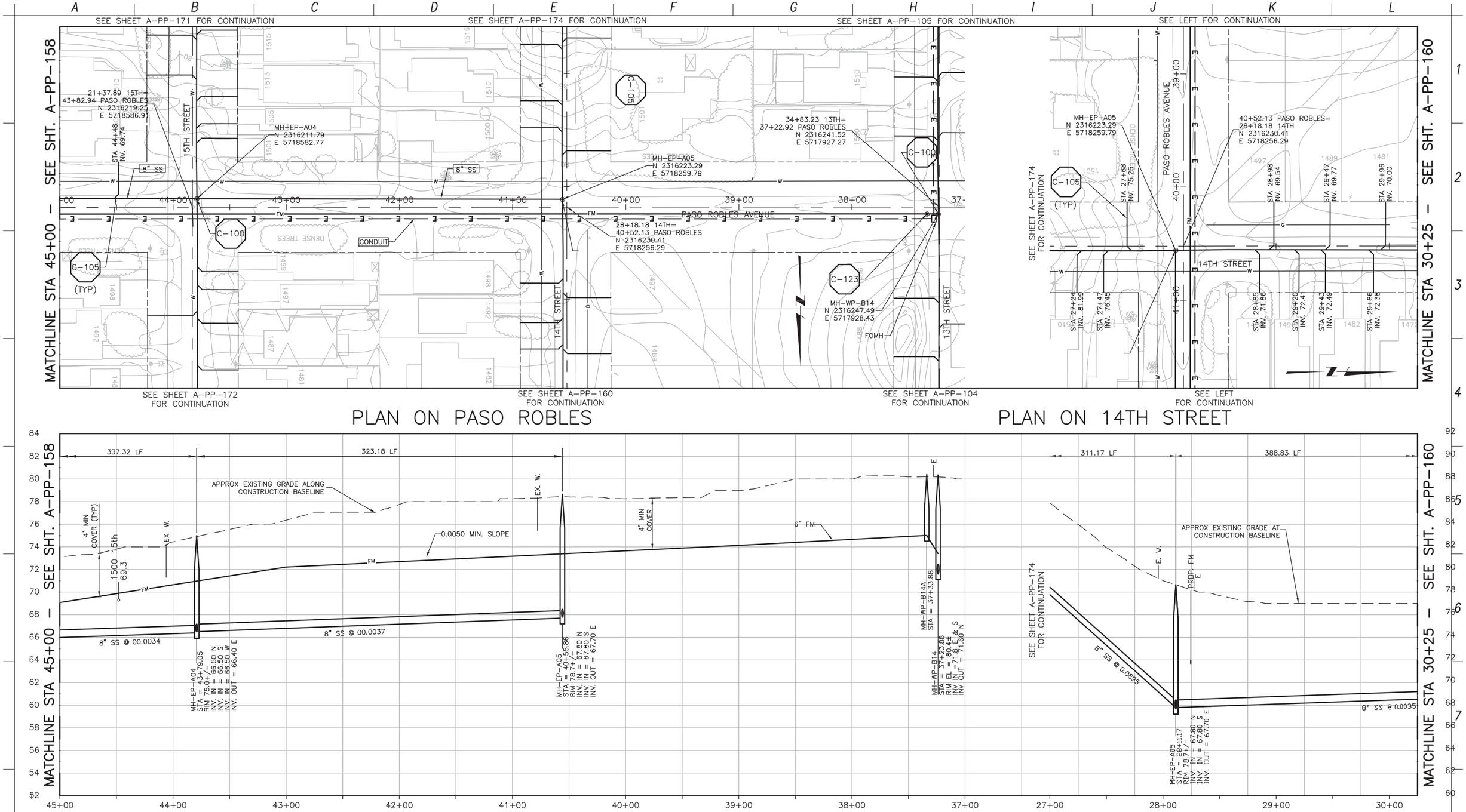

PLAN ON PASO ROBLES

PLAN ON 14TH STREET

PROFILE ON PASO ROBLES

PROFILE ON 14TH STREET

NOTES:

1. REFER TO SHEET A-G-010 FOR REQUIREMENTS OF ELECTRICAL CONDUIT AND MANHOLES ALONG PIPELINE.

SCALE:
HORZ: 1"=40'
VERT: 1"=4'

REV. NO.	DATE	DRWN	CHKD	REMARKS

DESIGNED BY: GLM
DRAWN BY: SHS
CHECKED BY: GLM
DATE: March 12, 2012

CDM Smith
2295 Gateway Oaks Drive, Suite 240
Sacramento, CA 95833
Tel: (916) 567-9900

0 1/2 1
IF THIS BAR DOES NOT MEASURE 1" THEN ADJUST SCALE ACCORDINGLY

REGISTERED PROFESSIONAL ENGINEER
GERALD L. MICHEL
No. 36895
CIVIL
STATE OF CALIFORNIA

rrmdesigngroup
creating environments people enjoy®

DIGALERT
DIAL TOLL FREE
1-800-642-2444
AT LEAST TWO DAYS BEFORE YOU DIG
UNDERGROUND SERVICE ALERT OF NORTHERN CALIFORNIA

LOS OSOS WASTEWATER COLLECTION SYSTEM
PLAN AND PROFILE
14TH STREET STA 26+75 TO 30+25
PASO ROBLES 45+00 TO 37+23.88

PROJECT NO.42502-83120
FILE NAME: A-PP-159.dwg
SHEET NO.
A-PP-159

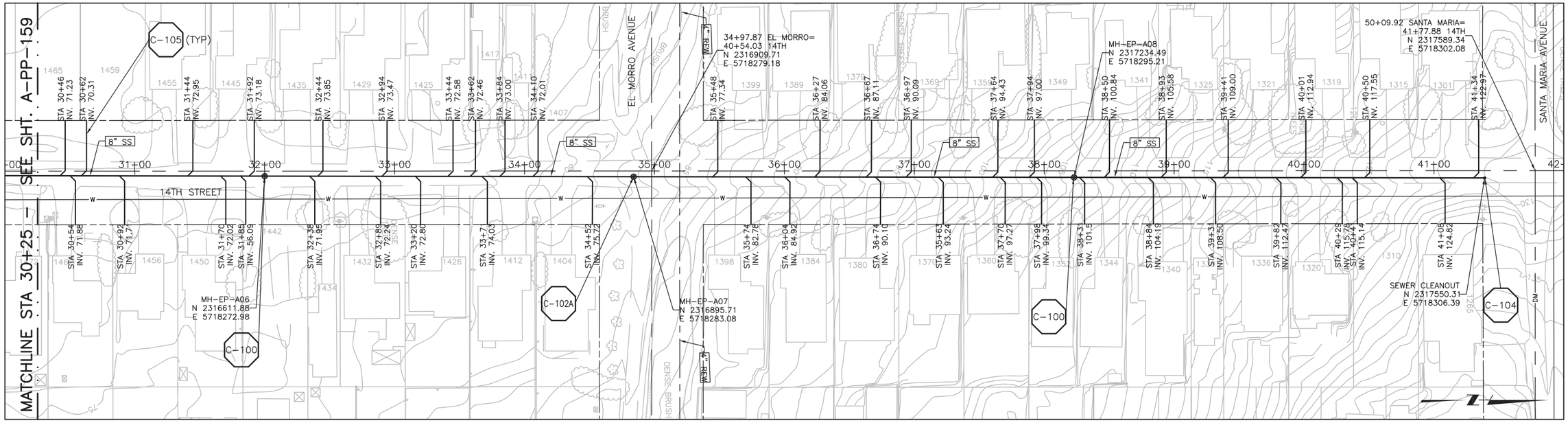

PLAN ON 14TH STREET

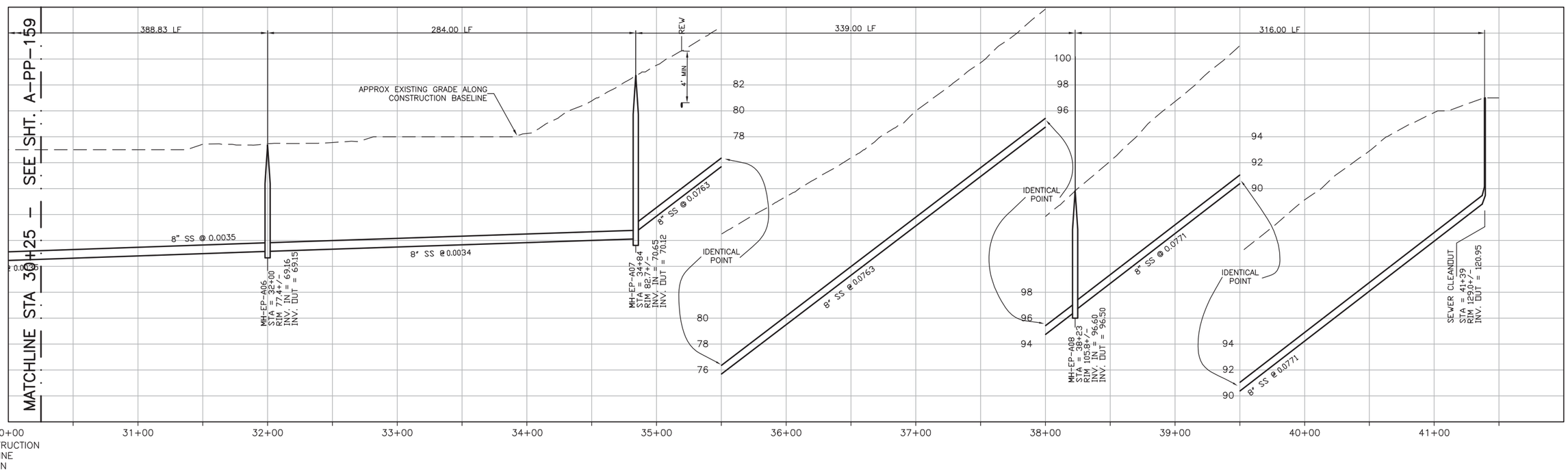

PROFILE ON 14TH STREET

SCALE:
HORZ: 1"=40'
VERT: 1"=4'

REV. NO.	DATE	DRWN	CHKD	REMARKS

DESIGNED BY: GLM
DRAWN BY: SHS
CHECKED BY: GLM
DATE: March 12, 2012

CDM Smith
2295 Gateway Oaks Drive, Suite 240
Sacramento, CA 95833
Tel: (916) 567-9900

0 1/2 1
IF THIS BAR DOES NOT MEASURE 1" THEN ADJUST SCALE ACCORDINGLY

REGISTERED PROFESSIONAL ENGINEER GERALD L. RICE No. 36895 CIVIL STATE OF CALIFORNIA 3/12/12

rrmdesigngroup
creating environments people enjoy®

DIGALERT
DIAL TOLL FREE
1-800-642-2444
AT LEAST TWO DAYS BEFORE YOU DIG
UNDERGROUND SERVICE ALERT OF NORTHERN CALIFORNIA

LOS OSOS WASTEWATER COLLECTION SYSTEM

PLAN AND PROFILE 14TH STREET STA 30+25 TO STA 41+39

PROJECT NO.42502-83120
FILE NAME: A-PP-160.dwg

SHEET NO.
A-PP-160