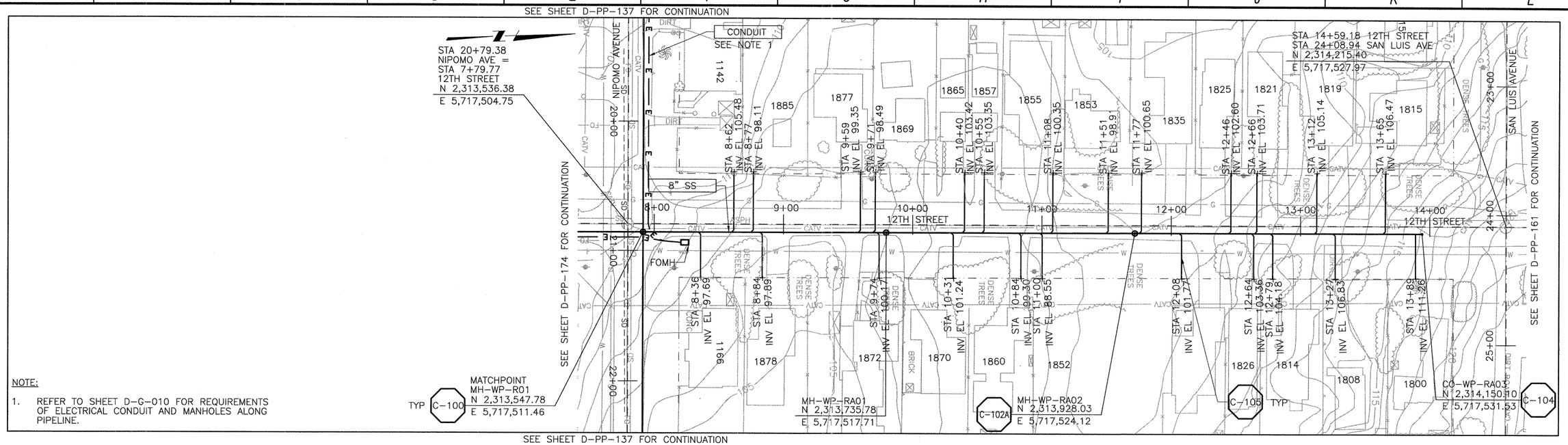


NOTE:

1. REFER TO SHEET D-G-010 FOR REQUIREMENTS OF ELECTRICAL CONDUIT AND MANHOLES ALONG PIPELINE.

SEE SHEET D-PP-137 FOR CONTINUATION

## PLAN ON 12TH STREET

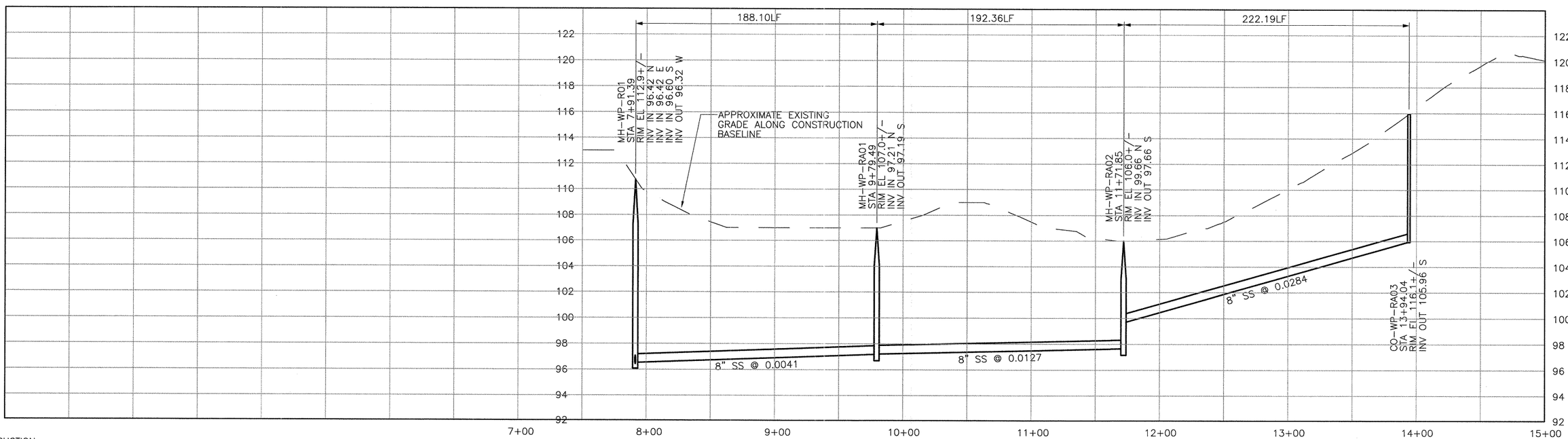


## PROFILE ON 12TH STREET

SCALE:
HORZ: 1"=40'
VERT: 1"=4'

| REV. NO. | DATE | DRWN | CHKD | REMARKS |
|---|---|---|---|---|

DESIGNED BY: MDT/MHM
DRAWN BY: JCM
CHECKED BY: GEH
DATE: MARCH, 2012

CDM Smith
2295 Gateway Oaks Drive, Suite 240
Sacramento, CA 95833
Tel: (916) 567-9900

IF THIS BAR DOES NOT MEASURE 1" THEN ADJUST SCALE ACCORDINGLY

DIGALERT
DIAL TOLL FREE
1-800-642-2444
AT LEAST TWO DAYS BEFORE YOU DIG
UNDERGROUND SERVICE ALERT OF NORTHERN CALIFORNIA

LOS OSOS WASTEWATER COLLECTION SYSTEM

# PLAN AND PROFILE
# 12TH STREET
# STA. 7+91.39 TO 13+94.04

PROJECT NO.42502-83120
FILE NAME: D-PP-173
SHEET NO.
D-PP-173

©2012 CDM SMITH ALL RIGHTS RESERVED.
REUSE OF DOCUMENTS: THESE DOCUMENTS AND DESIGNS PROVIDED BY PROFESSIONAL SERVICE, INCORPORATED HEREIN, ARE THE PROPERTY OF CDM SMITH AND ARE NOT TO BE USED, IN WHOLE OR PART, FOR ANY OTHER PROJECT WITHOUT THE WRITTEN AUTHORIZATION OF CDM SMITH.
S:\Los Osos\Walnut Creek\Area D-SS\ d-pp-173 03/12/12 14:36 bullockll XREFS: LosOsos-bdr, CA-MDM, x-feat-topo-D, x-feat-aerl-D, x-feat-row-D, x-feat-aerl-sou-D, x-util-strm-D, FIBER-OPTIC, x-feat-cnbj-REV, x-feat-addr-D, n-util-ss-D, n-feat-cnbj-REV, x-feat-aerl-sou-D, x-util-strm-D, FIBER-OPTIC, x-feat-row-D, x-util-all, x-feat-addr-D, n-util-ss-D, n-feat-cnbj-REV, x-feat-aerl-sou-D, x-util-strm-D, FIBER-OPTIC

SEE SHEET D-PP-137 FOR CONTINUATION

SEE SHEET D-PP-175 FOR CONTINUATION

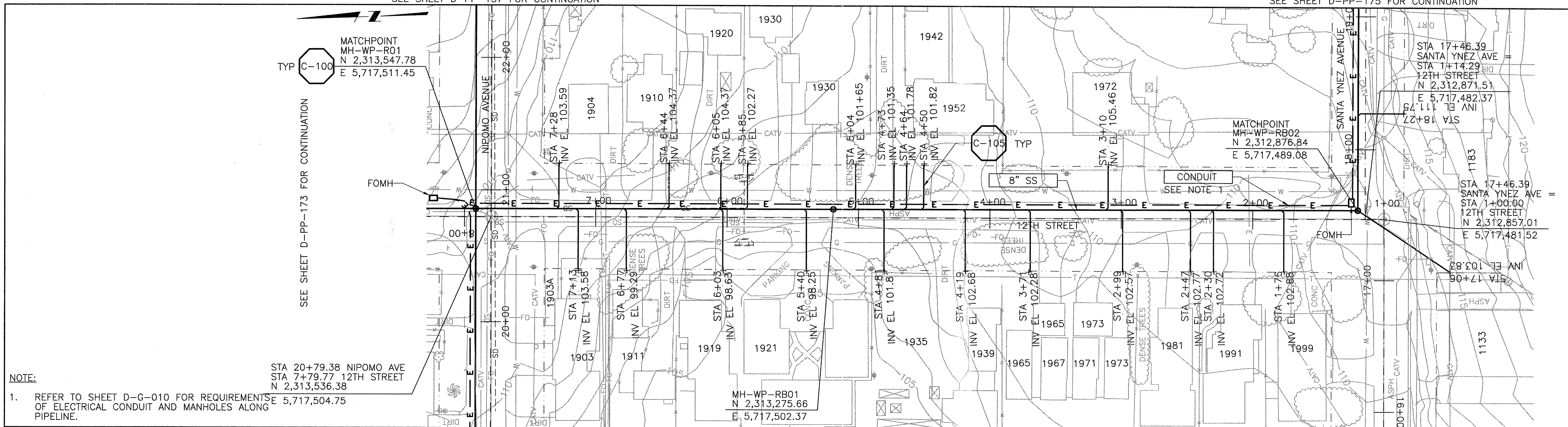


NOTE:

1. REFER TO SHEET D-G-010 FOR REQUIREMENTS OF ELECTRICAL CONDUIT AND MANHOLES ALONG PIPELINE.

SEE SHEET D-PP-137 FOR CONTINUATION

# PLAN ON 12TH STREET

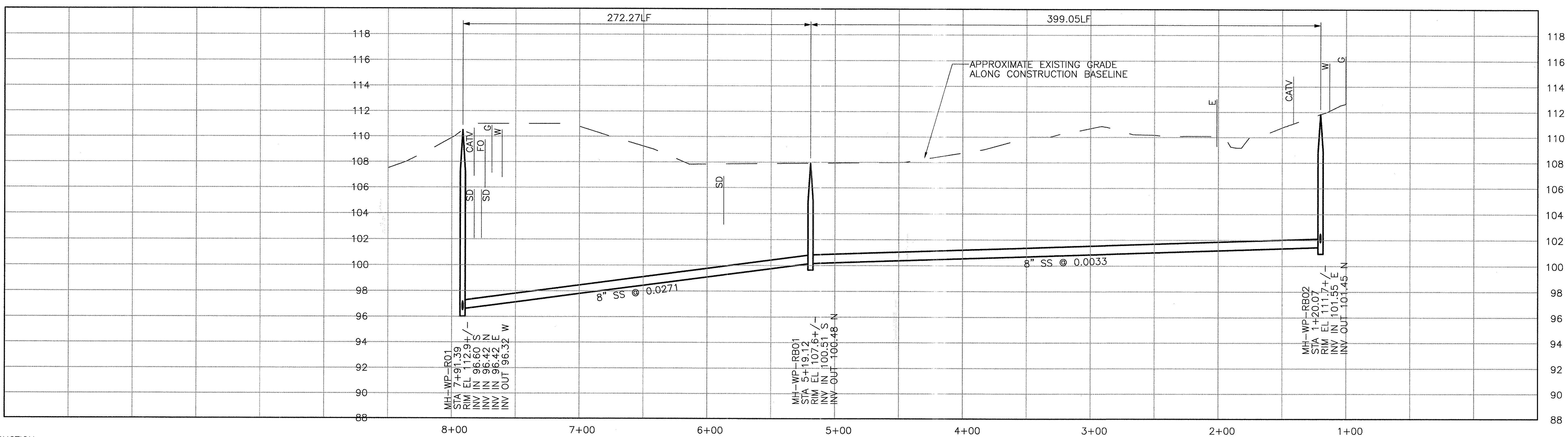


CONSTRUCTION BASELINE STATION

# PROFILE ON 12TH STREET

SCALE:
HORZ: 1"=40'
VERT: 1"=4'

| REV. NO. | DATE | DRWN | CHKD | REMARKS |
|---|---|---|---|---|

DESIGNED BY: SDN
DRAWN BY: LLB
CHECKED BY: MDM
DATE: MARCH, 2012

CDM Smith
2295 Gateway Oaks Drive, Suite 240
Sacramento, CA 95833
Tel: (916) 567-9900

IF THIS BAR DOES NOT MEASURE 1" THEN ADJUST SCALE ACCORDINGLY

REGISTERED PROFESSIONAL ENGINEER MICHAEL D. MIDDLETON C 061533 Exp. 6/30/13 CIVIL STATE OF CALIFORNIA

DIGALERT
DIAL TOLL FREE
1-800-642-2444
AT LEAST TWO DAYS BEFORE YOU DIG
UNDERGROUND SERVICE ALERT OF NORTHERN CALIFORNIA

LOS OSOS WASTEWATER COLLECTION SYSTEM
# PLAN AND PROFILE
## 12TH STREET
## STA. 7+91.39 TO 1+20.07

PROJECT NO.42502-83120
FILE NAME: D-PP-174
SHEET NO.
D-PP-174

©2012 CDM SMITH ALL RIGHTS RESERVED.
REUSE OF DOCUMENTS: THESE DOCUMENTS AND DESIGNS PROVIDED BY PROFESSIONAL SERVICE, INCORPORATED HEREIN, ARE THE PROPERTY OF CDM SMITH AND ARE NOT TO BE USED, IN WHOLE OR PART, FOR ANY OTHER PROJECT WITHOUT THE WRITTEN AUTHORIZATION OF CDM SMITH.
S:\Los Osos\Walnut Creek\Area D-SS\ d-pp-174 03/12/12 14:34 bullockll XREFS: LosOsos-bdr, CA-MDM, x-feat-topo-D, x-feat-aerl-D, x-feat-row-D, x-util-all, x-feat-addr-D, n-util-ss-D, n-feat-cnbl-REV, x-feat-aerl-sou-D, x-util-strm-D, FIBER-OPTIC

SEE SHEET D-PP-174 FOR CONTINUATION

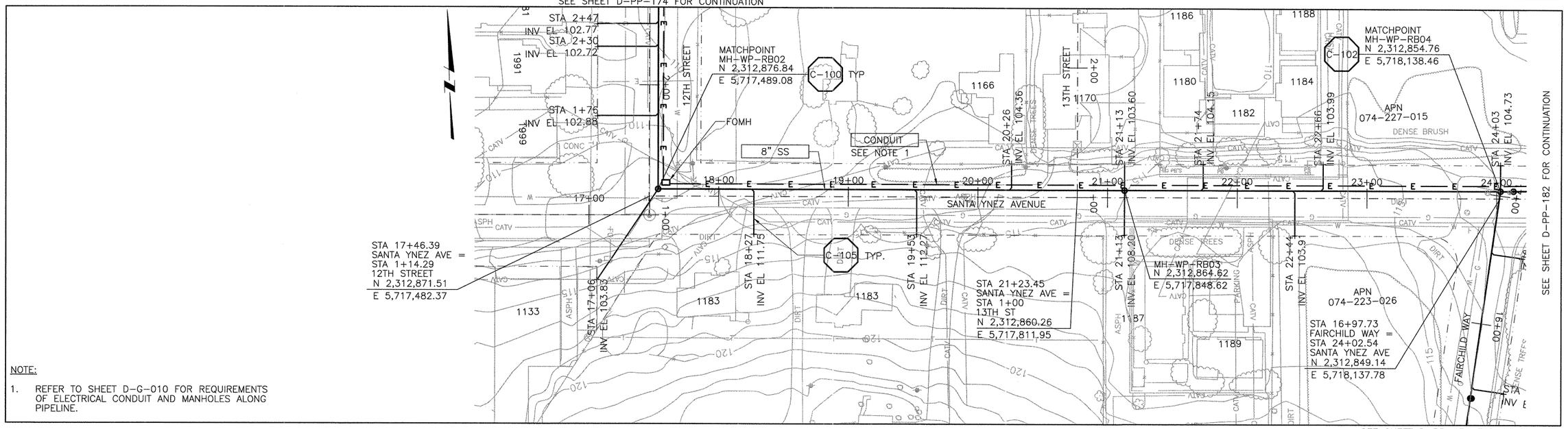


SEE SHEET D-PP-176 FOR CONTINUATION

NOTE:

1. REFER TO SHEET D-G-010 FOR REQUIREMENTS OF ELECTRICAL CONDUIT AND MANHOLES ALONG PIPELINE.

## PLAN ON SANTA YNEZ AVENUE

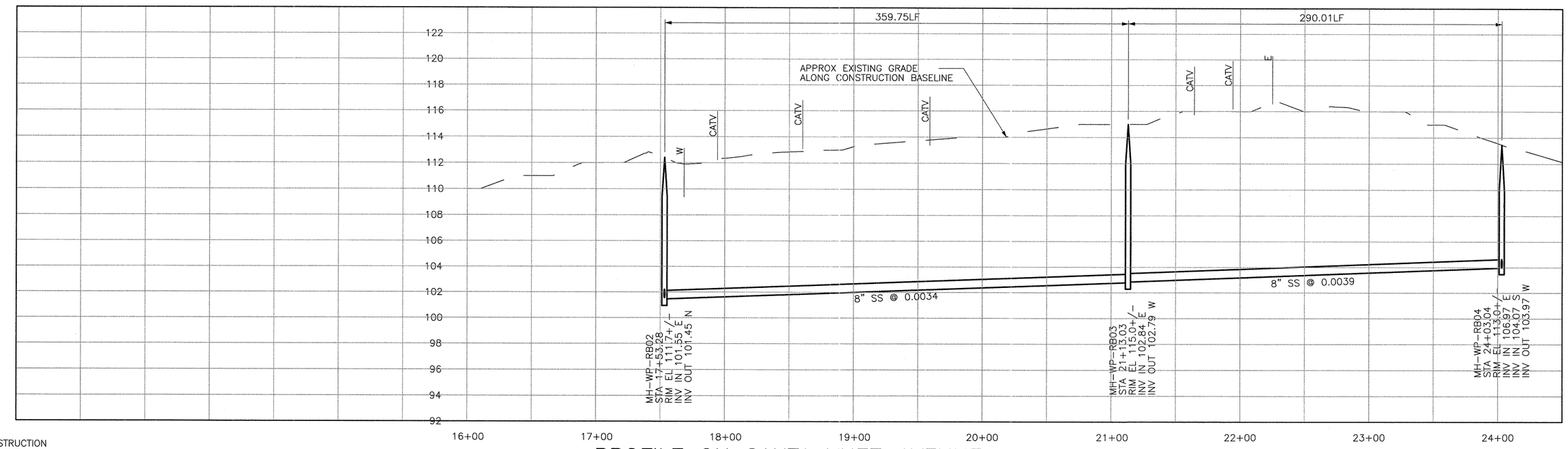


CONSTRUCTION BASELINE STATION

## PROFILE ON SANTA YNEZ AVENUE

SCALE:
HORZ: 1"=40'
VERT: 1"=4'

| REV. NO. | DATE | DRWN | CHKD | REMARKS |
|---|---|---|---|---|

DESIGNED BY: SDN
DRAWN BY: LLB
CHECKED BY: MDM
DATE: MARCH, 2012

CDM Smith
2295 Gateway Oaks Drive, Suite 240
Sacramento, CA 95833
Tel: (916) 567-9900

0 1/2 1
IF THIS BAR DOES NOT MEASURE 1" THEN ADJUST SCALE ACCORDINGLY

REGISTERED PROFESSIONAL ENGINEER
MICHAEL D. MIDDLETON
C 061533
Exp. 6/30/13
CIVIL
STATE OF CALIFORNIA

DIGALERT
DIAL TOLL FREE
1-800-642-2444
AT LEAST TWO DAYS BEFORE YOU DIG
UNDERGROUND SERVICE ALERT OF NORTHERN CALIFORNIA

LOS OSOS WASTEWATER COLLECTION SYSTEM
PLAN AND PROFILE
SANTA YNEZ AVE
STA. 17+53.28 TO 24+03.04

PROJECT NO. 42502-83120
FILE NAME: D-PP-175
SHEET NO.
D-PP-175

©2012 CDM SMITH ALL RIGHTS RESERVED.
REUSE OF DOCUMENTS: THESE DOCUMENTS AND DESIGNS PROVIDED BY PROFESSIONAL SERVICE, INCORPORATED HEREIN, ARE THE PROPERTY OF CDM SMITH AND ARE NOT TO BE USED, IN WHOLE OR PART, FOR ANY OTHER PROJECT WITHOUT THE WRITTEN AUTHORIZATION OF CDM SMITH.
S:\Los Osos\Walnut Creek\Area D-SS\ d-pp-175 03/12/12 14:44 bullockll XREFS: LosOsos-bdr, x-feat-topo-D, x-feat-row-D, x-util-all, x-feat-addr-D, n-util-ss-D, n-feat-cnbl-REV, x-feat-aerl-sou-D, CA-MDM, x-util-strm-D, FIBER-OPTIC

SEE SHEET D-PP-182 FOR CONTINUATION

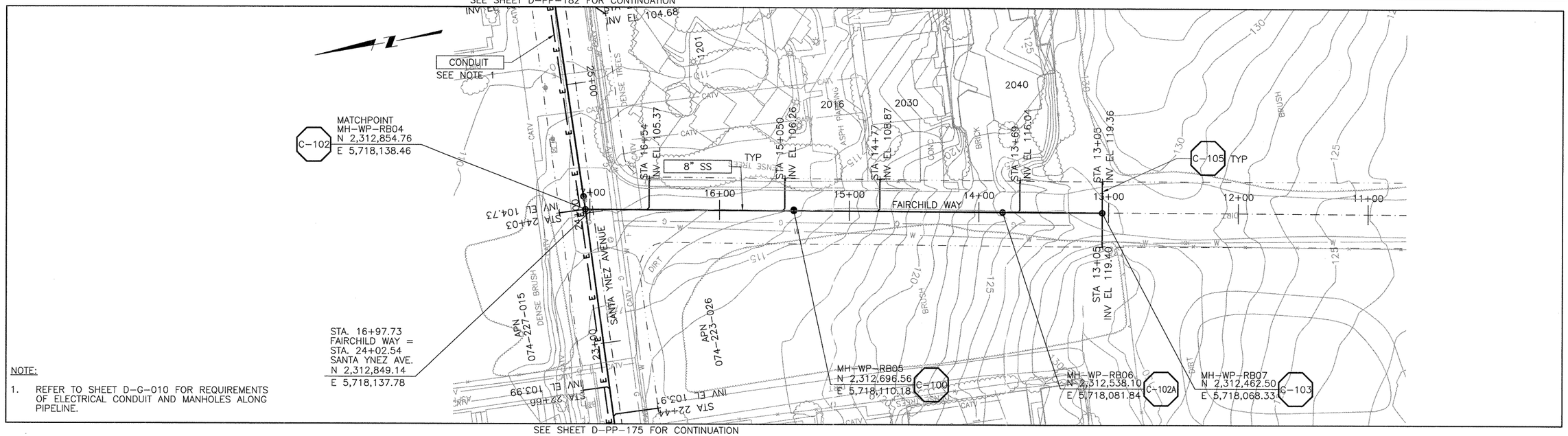


NOTE:

1. REFER TO SHEET D-G-010 FOR REQUIREMENTS OF ELECTRICAL CONDUIT AND MANHOLES ALONG PIPELINE.

SEE SHEET D-PP-175 FOR CONTINUATION

## PLAN ON FAIRCHILD WAY

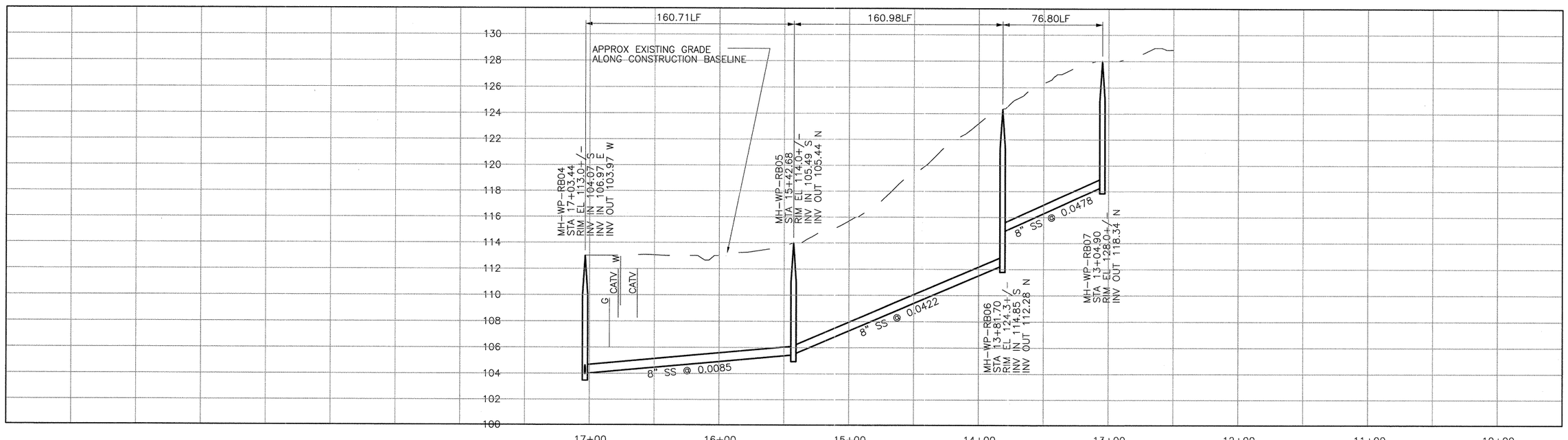


CONSTRUCTION BASELINE STATION

## PROFILE ON FAIRCHILD WAY

SCALE:
HORZ: 1"=40'
VERT: 1"=4'

| REV. NO. | DATE | DRWN | CHKD | REMARKS |
|---|---|---|---|---|

DESIGNED BY: SDN
DRAWN BY: LLB
CHECKED BY: MDM
DATE: MARCH, 2012

CDM Smith
2295 Gateway Oaks Drive, Suite 240
Sacramento, CA 95833
Tel: (916) 567-9900

0 1/2 1
IF THIS BAR DOES NOT MEASURE 1" THEN ADJUST SCALE ACCORDINGLY

REGISTERED PROFESSIONAL ENGINEER
MICHAEL D. MIDDLETON
C 061533
Exp. 6/30/13
CIVIL
STATE OF CALIFORNIA

DIGALERT
DIAL TOLL FREE
1-800-642-2444
AT LEAST TWO DAYS BEFORE YOU DIG
UNDERGROUND SERVICE ALERT OF NORTHERN CALIFORNIA

LOS OSOS WASTEWATER COLLECTION SYSTEM
PLAN AND PROFILE
FAIRCHILD WAY
STA. 17+03.44 TO 13+04.90

PROJECT NO. 42502-83120
FILE NAME: D-PP-176
SHEET NO.
D-PP-176

©2012 CDM SMITH ALL RIGHTS RESERVED.
REUSE OF DOCUMENTS: THESE DOCUMENTS AND DESIGNS PROVIDED BY PROFESSIONAL SERVICE, INCORPORATED HEREIN, ARE THE PROPERTY OF CDM SMITH AND ARE NOT TO BE USED, IN WHOLE OR PART, FOR ANY OTHER PROJECT WITHOUT THE WRITTEN AUTHORIZATION OF CDM SMITH.
S:\Los Osos\Walnut Creek\Area D-SS\ d-pp-176 03/12/12 14:51 bullockll XREFS: LosOsos-bdr, x-feat-topo-D, x-feat-row-D, x-util-all, x-feat-addr-D, n-util-ss-D, n-feat-cnbl-REV, x-feat-aerl-sou-D, CA-MDM, x-util-strm-D, FIBER-OPTIC

SEE SHEET D-PP-137 FOR CONTINUATION

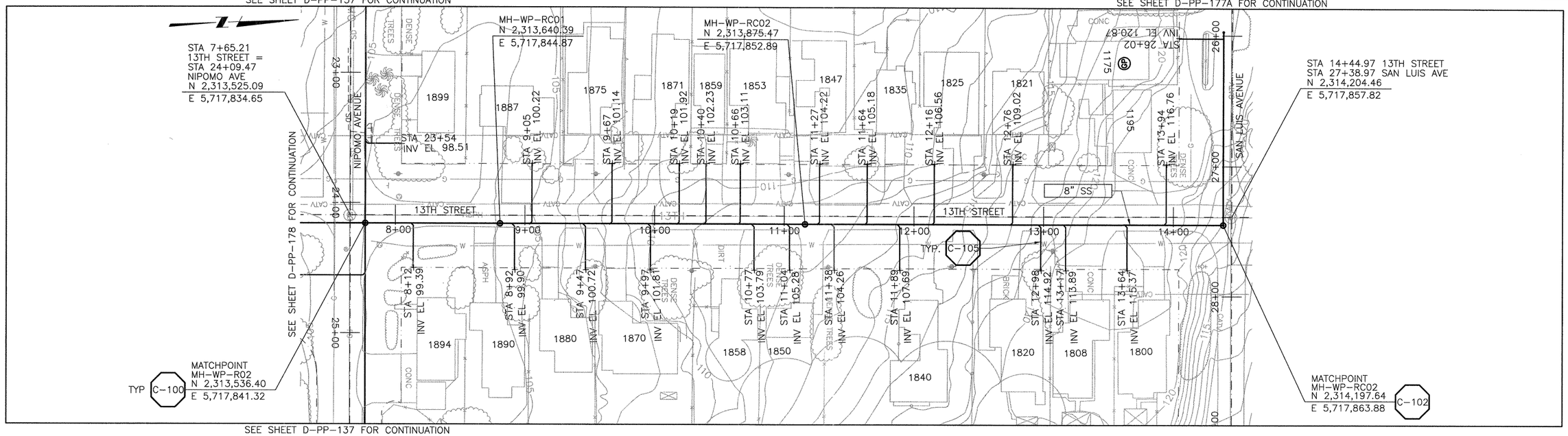


SEE SHEET D-PP-177A FOR CONTINUATION

SEE SHEET D-PP-137 FOR CONTINUATION

## PLAN ON 13TH STREET

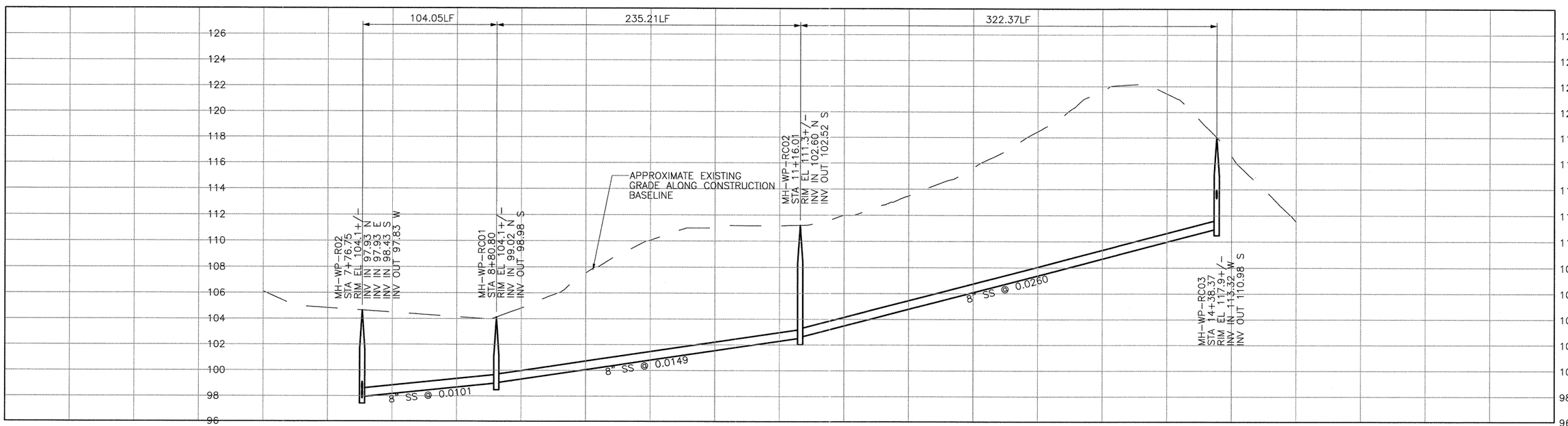


## PROFILE ON 13TH STREET

SCALE:
HORZ: 1"=40'
VERT: 1"=4'

| REV. NO. | DATE | DRWN | CHKD | REMARKS |
|---|---|---|---|---|

DESIGNED BY: SDN
DRAWN BY: LLB
CHECKED BY: MDM
DATE: MARCH, 2012

CDM Smith
2295 Gateway Oaks Drive, Suite 240
Sacramento, CA 95833
Tel: (916) 567-9900

0 1/2 1
IF THIS BAR DOES NOT MEASURE 1" THEN ADJUST SCALE ACCORDINGLY

REGISTERED PROFESSIONAL ENGINEER MICHAEL D. MIDDLETON C 061533 Exp. 6/30/13 CIVIL STATE OF CALIFORNIA

DIGALERT
DIAL TOLL FREE 1-800-642-2444
AT LEAST TWO DAYS BEFORE YOU DIG
UNDERGROUND SERVICE ALERT OF NORTHERN CALIFORNIA

LOS OSOS WASTEWATER COLLECTION SYSTEM
PLAN AND PROFILE
13TH STREET
STA. 7+76.75 TO 14+38.27

PROJECT NO. 42502-83120
FILE NAME: D-PP-177
SHEET NO.
D-PP-177

©2012 CDM SMITH ALL RIGHTS RESERVED.
REUSE OF DOCUMENTS: THESE DOCUMENTS AND DESIGNS PROVIDED BY PROFESSIONAL SERVICE, INCORPORATED HEREIN, ARE THE PROPERTY OF CDM SMITH AND ARE NOT TO BE USED, IN WHOLE OR PART, FOR ANY OTHER PROJECT WITHOUT THE WRITTEN AUTHORIZATION OF CDM SMITH.
S:\Los Osos\Walnut Creek\Area D-SS\ d-pp-177 03/12/12 14:49 bullockll XREFS: LosOsos-bdr, CA-MDM, x-feat-topo-D, x-feat-aerl-D, x-feat-row-D, x-util-all, x-feat-addr-D, n-util-ss-D, n-feat-cnbl-REV, x-feat-aerl-sou-D, x-util-strm-D

©2012 CDM SMITH ALL RIGHTS RESERVED.
REUSE OF DOCUMENTS: THESE DOCUMENTS AND DESIGNS PROVIDED BY PROFESSIONAL SERVICE, INCORPORATED HEREIN, ARE THE PROPERTY OF CDM SMITH AND ARE NOT TO BE USED, IN WHOLE OR PART, FOR ANY OTHER PROJECT WITHOUT THE WRITTEN AUTHORIZATION OF CDM SMITH.
S:\Los Osos\Walnut Creek\Area D-SS\ d-pp-177A 03/12/12 14:48 bullockll XREFS: x-feat-topo-D, x-feat-aerl-D, x-feat-row-D, x-util-all, x-feat-addr-D, n-util-ss-D, n-feat-cnbl-REV, LosOsos-bdr, CA-MDM, x-util-strm-D

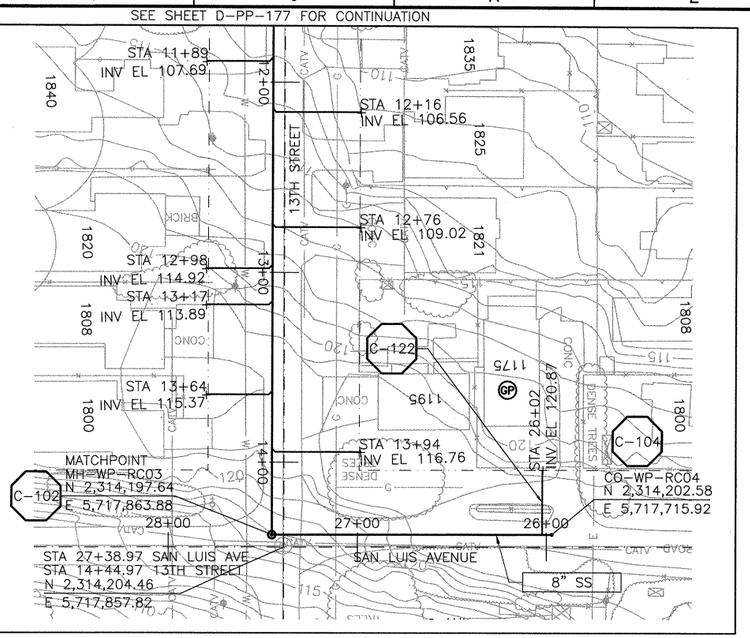


## PLAN ON SAN LUIS AVENUE

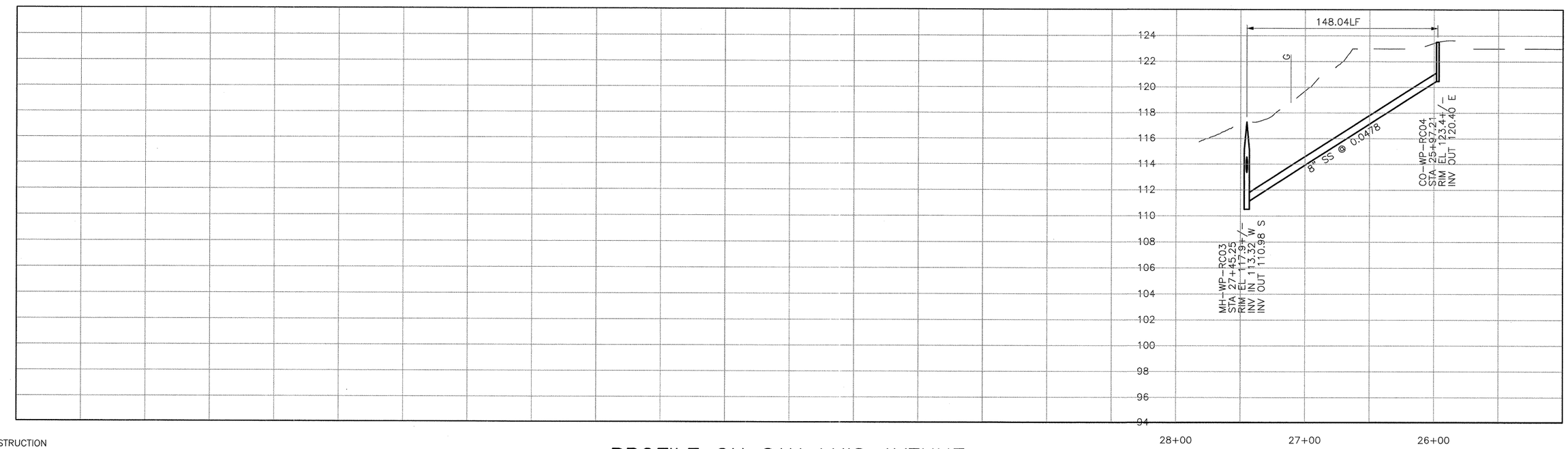


CONSTRUCTION
BASELINE
STATION

## PROFILE ON SAN LUIS AVENUE

SCALE:
HORZ: 1"=40'
VERT: 1"=4'

| REV. NO. | DATE | DRWN | CHKD | REMARKS |
|---|---|---|---|---|
| | | | | |

DESIGNED BY: SDN
DRAWN BY: LLB
CHECKED BY: MDM
DATE: MARCH, 2012

CDM Smith
2295 Gateway Oaks Drive, Suite 240
Sacramento, CA 95833
Tel: (916) 567-9900

0 1/2 1
IF THIS BAR DOES NOT MEASURE 1" THEN ADJUST SCALE ACCORDINGLY

REGISTERED PROFESSIONAL ENGINEER
MICHAEL D. MIDDLETON
No. C 061533
Exp. 6/30/13
CIVIL
STATE OF CALIFORNIA

DIGALERT
DIAL TOLL FREE
1-800-642-2444
AT LEAST TWO DAYS BEFORE YOU DIG
UNDERGROUND SERVICE ALERT OF NORTHERN CALIFORNIA

LOS OSOS WASTEWATER COLLECTION SYSTEM
PLAN AND PROFILE
SAN LUIS AVE
STA. 27+45.25 TO 25+97.21

PROJECT NO. 42502-83120
FILE NAME: D-PP-177A
SHEET NO.
D-PP-177A

SEE SHEET D-PP-137 FOR CONTINUATION

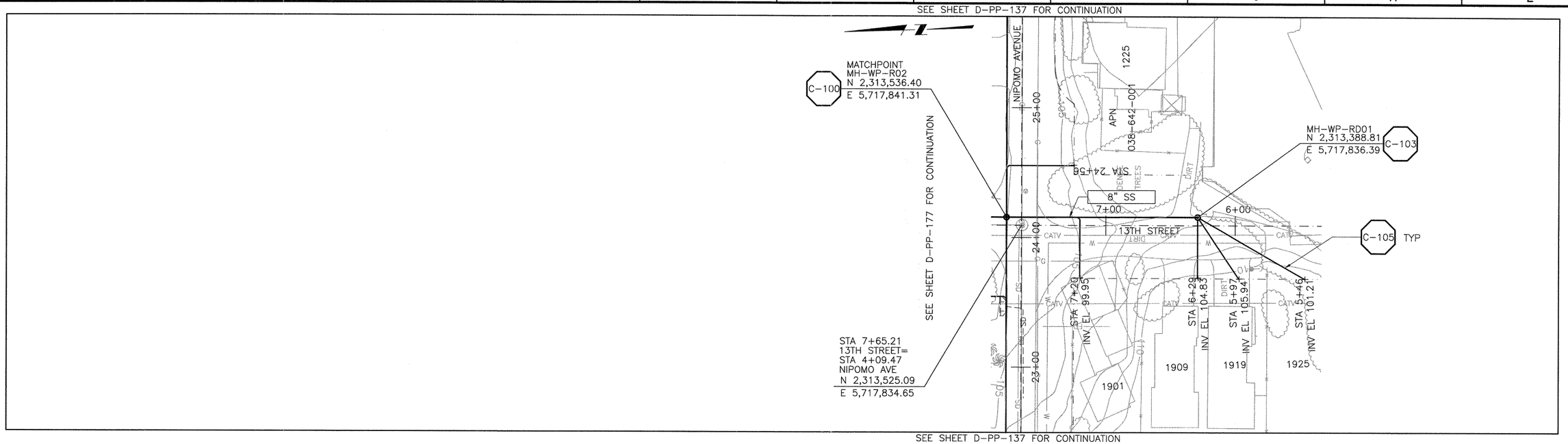


SEE SHEET D-PP-137 FOR CONTINUATION

## PLAN ON 13TH STREET

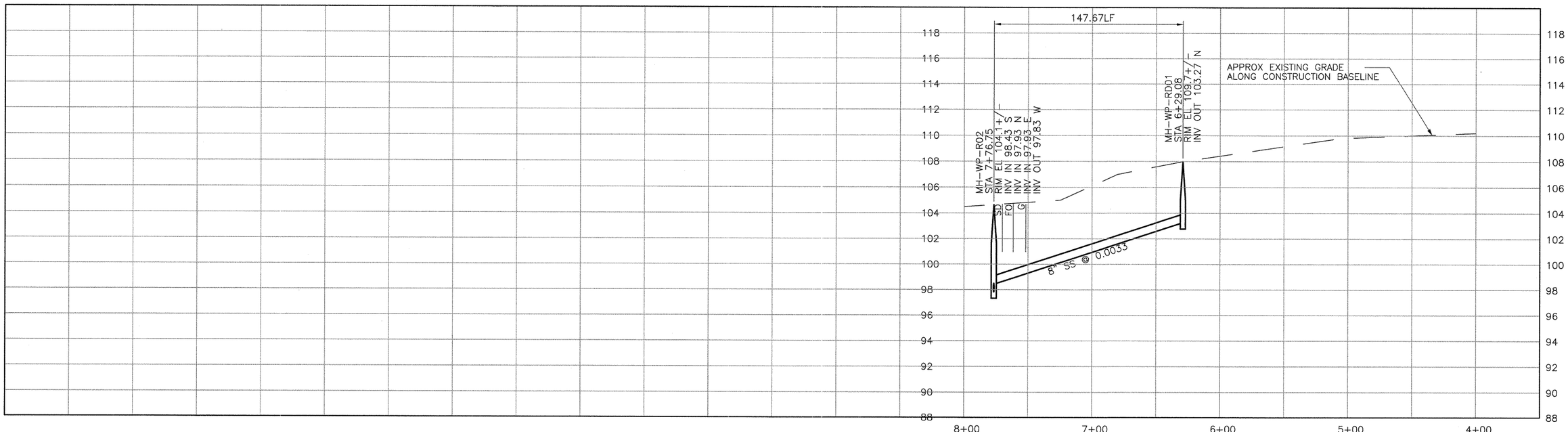


CONSTRUCTION
BASELINE
STATION

## PROFILE ON 13TH STREET

SCALE:
HORZ: 1"=40'
VERT: 1"=4'

| REV. NO. | DATE | DRWN | CHKD | REMARKS |
|---|---|---|---|---|

DESIGNED BY: SDN
DRAWN BY: LLB
CHECKED BY: MDM
DATE: MARCH, 2012

CDM Smith
2295 Gateway Oaks Drive, Suite 240
Sacramento, CA 95833
Tel: (916) 567-9900

0 1/2 1
IF THIS BAR DOES NOT MEASURE 1" THEN ADJUST SCALE ACCORDINGLY

REGISTERED PROFESSIONAL ENGINEER
MICHAEL D. MIDDLETON
C 061533
Exp. 6/30/13
CIVIL
STATE OF CALIFORNIA

DIGALERT
DIAL TOLL FREE
1-800-642-2444
AT LEAST TWO DAYS BEFORE YOU DIG
UNDERGROUND SERVICE ALERT OF NORTHERN CALIFORNIA

LOS OSOS WASTEWATER COLLECTION SYSTEM
PLAN AND PROFILE
13TH STREET
STA. 7+76.75 TO 6+29.08

PROJECT NO.42502-83120
FILE NAME: D-PP-178
SHEET NO.
D-PP-178

©2012 CDM SMITH ALL RIGHTS RESERVED.
REUSE OF DOCUMENTS: THESE DOCUMENTS AND DESIGNS PROVIDED BY PROFESSIONAL SERVICE, INCORPORATED HEREIN, ARE THE PROPERTY OF CDM SMITH AND ARE NOT TO BE USED, IN WHOLE OR PART, FOR ANY OTHER PROJECT WITHOUT THE WRITTEN AUTHORIZATION OF CDM SMITH.
S:\Los Osos\Walnut Creek\Area D-SS\ d-pp-178 03/12/12 14:48 bullockll XREFS: LosOsos-bdr, x-feat-topo-D, x-feat-aerl-D, x-feat-row-D, x-util-all, x-feat-addr-D, n-util-ss-D, n-feat-cnbl-REV, x-feat-aerl-sou-D, CA-MDM, x-util-strm-D

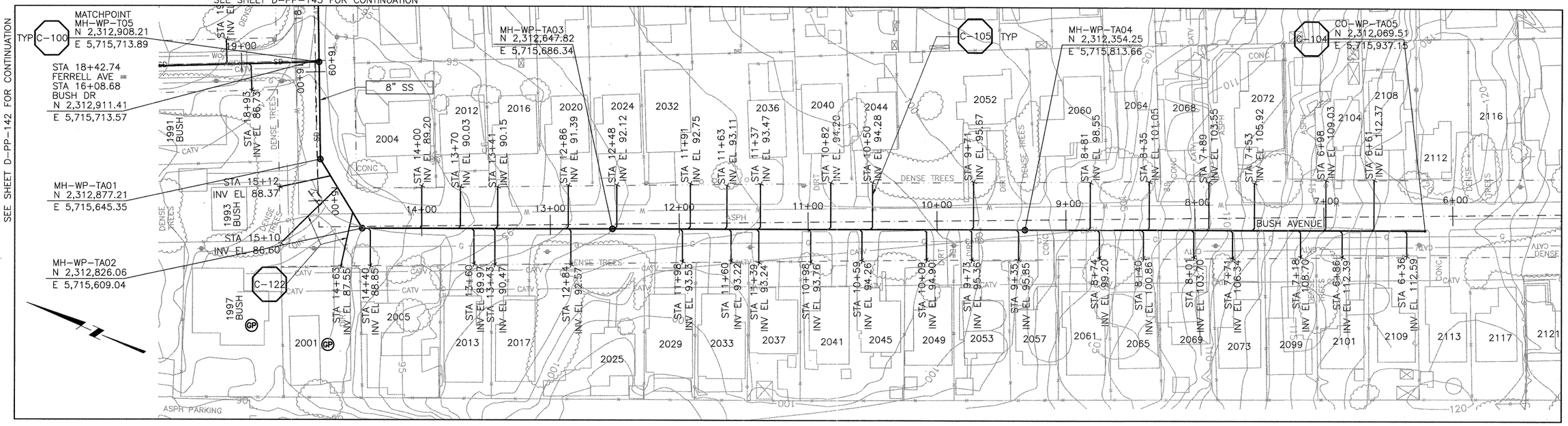


PLAN ON BUSH DRIVE

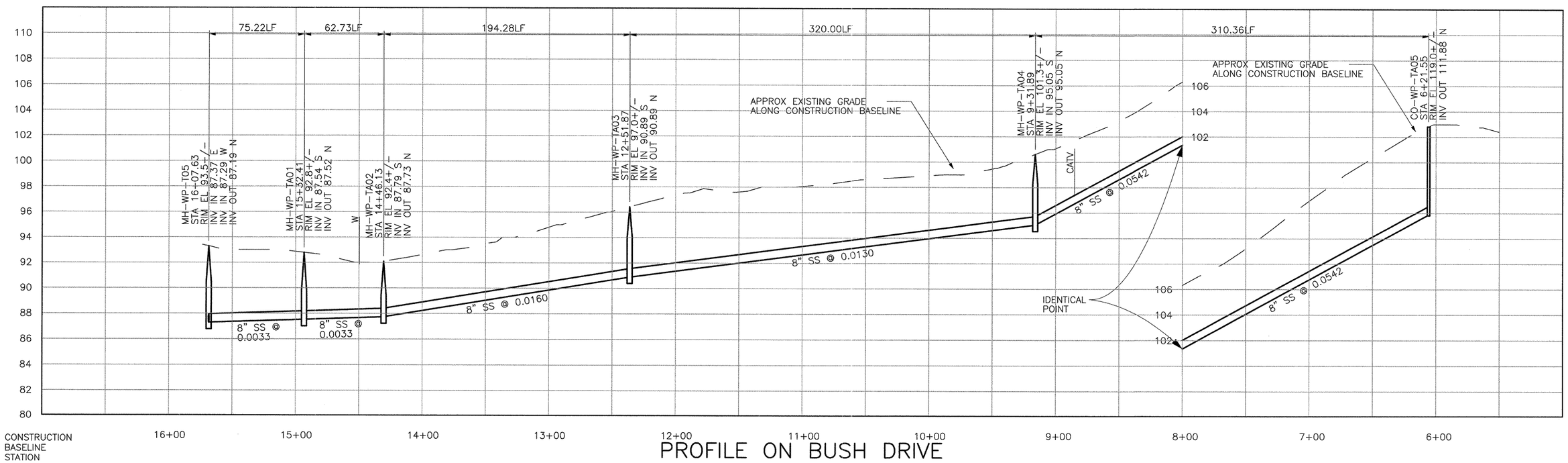


PROFILE ON BUSH DRIVE

SCALE:
HORZ: 1"=40'
VERT: 1"=4'

| REV. NO. | DATE | DRWN | CHKD | REMARKS |
|---|---|---|---|---|

DESIGNED BY: SDN
DRAWN BY: LLB
CHECKED BY: MDM
DATE: MARCH, 2012

CDM Smith
2295 Gateway Oaks Drive, Suite 240
Sacramento, CA 95833
Tel: (916) 567-9900

0 1/2 1
IF THIS BAR DOES NOT MEASURE 1" THEN ADJUST SCALE ACCORDINGLY

REGISTERED PROFESSIONAL ENGINEER
MICHAEL D. MIRABEAU
C 061533
Exp. 6/30/13
CIVIL
STATE OF CALIFORNIA

DIGALERT
DIAL TOLL FREE
1-800-642-2444
AT LEAST TWO DAYS BEFORE YOU DIG
UNDERGROUND SERVICE ALERT OF NORTHERN CALIFORNIA

LOS OSOS WASTEWATER COLLECTION SYSTEM
PLAN AND PROFILE
BUSH DRIVE
STA. 16+07.63 TO 6+21.55

PROJECT NO.42502-83120
FILE NAME: D-PP-179
SHEET NO.
D-PP-179

©2012 CDM SMITH ALL RIGHTS RESERVED.
REUSE OF DOCUMENTS: THESE DOCUMENTS AND DESIGNS PROVIDED BY PROFESSIONAL SERVICE, INCORPORATED HEREIN, ARE THE PROPERTY OF CDM SMITH AND ARE NOT TO BE USED, IN WHOLE OR PART, FOR ANY OTHER PROJECT WITHOUT THE WRITTEN AUTHORIZATION OF CDM SMITH.
S:\Los Osos\Walnut Creek\Area D-SS\ d-pp-179 03/12/12 14:46 bullockll XREFS: LosOsos-bdr, x-feat-topo-D, x-feat-row-D, x-util-all, x-feat-addr-D, n-util-ss-D, n-feat-cnbl-REV, x-feat-aerl-sou-D, CA-MDM, x-util-strm-D

SEE SHEET D-PP-165 FOR CONTINUATION

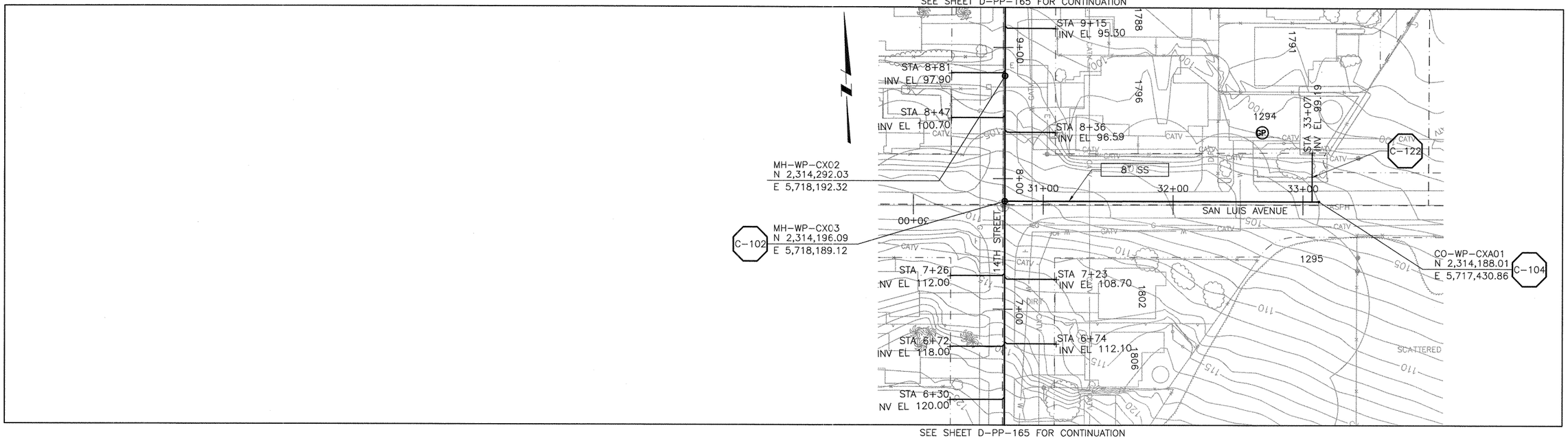


SEE SHEET D-PP-165 FOR CONTINUATION

## PLAN ON SAN LUIS AVENUE

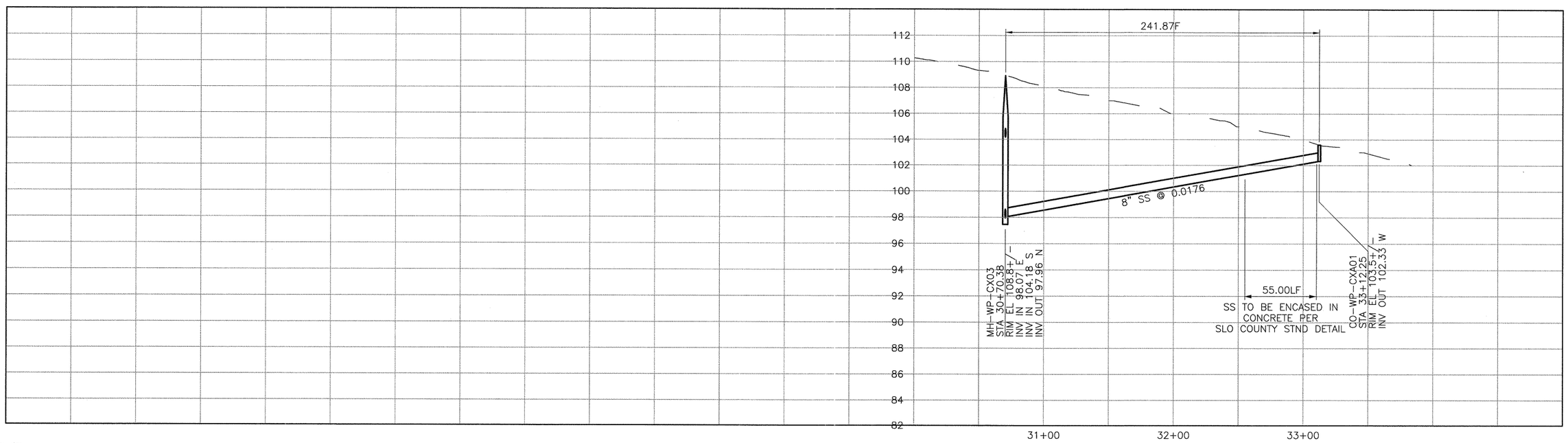


CONSTRUCTION
BASELINE
STATION

## PROFILE ON SAN LUIS AVENUE

SCALE:
HORZ: 1"=40'
VERT: 1"=4'

| REV. NO. | DATE | DRWN | CHKD | REMARKS |
|---|---|---|---|---|

DESIGNED BY: APS
DRAWN BY: LLB
CHECKED BY: MDM
DATE: MARCH, 2012

CDM Smith
2295 Gateway Oaks Drive, Suite 240
Sacramento, CA 95833
Tel: (916) 567-9900

0 1/2 1
IF THIS BAR DOES NOT MEASURE 1" THEN ADJUST SCALE ACCORDINGLY

REGISTERED PROFESSIONAL ENGINEER
MICHAEL D. MIDDLETON
C 061533
Exp. 6/30/13
CIVIL
STATE OF CALIFORNIA

DIGALERT
DIAL TOLL FREE
1-800-642-2444
AT LEAST TWO DAYS BEFORE YOU DIG
UNDERGROUND SERVICE ALERT OF NORTHERN CALIFORNIA

LOS OSOS WASTEWATER COLLECTION SYSTEM
PLAN AND PROFILE
SAN LUIS AVENUE
STA. 30+70.38 TO 33+12.25

PROJECT NO.42502-83120
FILE NAME: D-PP-179A
SHEET NO.
D-PP-179A

©2012 CDM SMITH ALL RIGHTS RESERVED.
REUSE OF DOCUMENTS: THESE DOCUMENTS AND DESIGNS PROVIDED BY PROFESSIONAL SERVICE, INCORPORATED HEREIN, ARE THE PROPERTY OF CDM SMITH AND ARE NOT TO BE USED, IN WHOLE OR PART, FOR ANY OTHER PROJECT WITHOUT THE WRITTEN AUTHORIZATION OF CDM SMITH.
S:\Los Osos\Walnut Creek\Area D-SS\ d-pp-179A 03/12/12 14:51 bullockll XREFS: LosOsos-bdr, CA-MDM, x-feat-topo-D, x-feat-aerl-D, x-feat-row-D, x-util-all, x-feat-addr-D, n-feat-cnbl-REV, n-util-ss-D

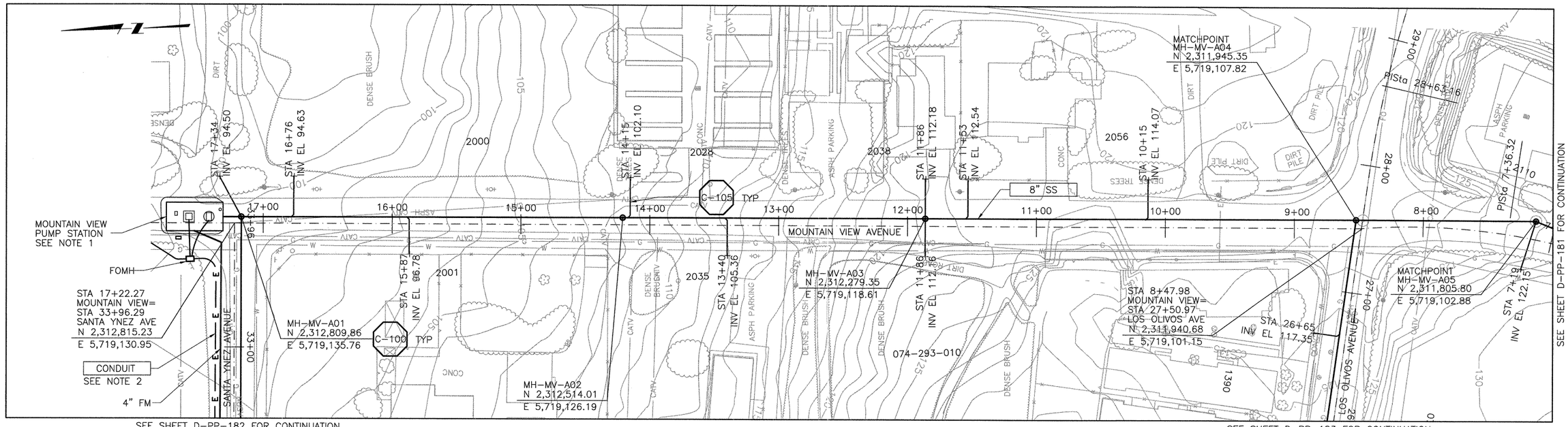


NOTE:

1. SEE SHEET D-C-402 FOR DETAILS.
2. REFER TO SHEET D-G-010 FOR REQUIREMENTS OF ELECTRICAL CONDUIT AND MANHOLES ALONG PIPELINE.

# PLAN ON MOUNTAIN VIEW AVENUE

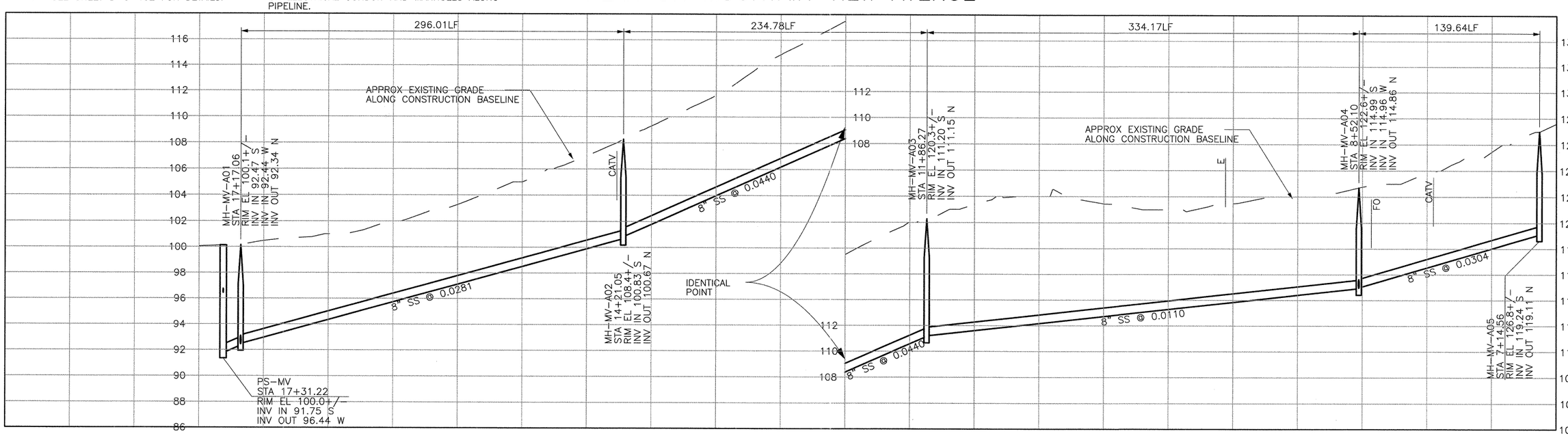


# PROFILE ON MOUNTAIN VIEW AVENUE

SCALE:
HORZ: 1"=40'
VERT: 1"=4'

| REV. NO. | DATE | DRWN | CHKD | REMARKS |
|---|---|---|---|---|

DESIGNED BY: SDN
DRAWN BY: LLB
CHECKED BY: MDM
DATE: MARCH, 2012

CDM Smith
2295 Gateway Oaks Drive, Suite 240
Sacramento, CA 95833
Tel: (916) 567-9900

0 1/2 1
IF THIS BAR DOES NOT MEASURE 1" THEN ADJUST SCALE ACCORDINGLY

REGISTERED PROFESSIONAL ENGINEER MICHAEL D. MIDDLETON C 061533 Exp. 6/30/13 CIVIL STATE OF CALIFORNIA

DIGALERT
DIAL TOLL FREE 1-800-642-2444 AT LEAST TWO DAYS BEFORE YOU DIG
UNDERGROUND SERVICE ALERT OF NORTHERN CALIFORNIA

LOS OSOS WASTEWATER COLLECTION SYSTEM
PLAN AND PROFILE
MOUNTAIN VIEW AVE
STA. 17+17.06 TO 8+52.10

PROJECT NO. 42502-83120
FILE NAME: D-PP-180
SHEET NO.
D-PP-180

©2012 CDM SMITH ALL RIGHTS RESERVED. THESE DOCUMENTS AND DESIGNS PROVIDED BY PROFESSIONAL SERVICE, INCORPORATED HEREIN, ARE THE PROPERTY OF CDM SMITH AND ARE NOT TO BE USED, IN WHOLE OR PART, FOR ANY OTHER PROJECT WITHOUT THE WRITTEN AUTHORIZATION OF CDM SMITH. REUSE OF DOCUMENTS: S:\Los Osos\Walnut Creek\Area D-SS\ d-pp-180 03/12/12 14:58 bullockll XREFS: LosOsos-bdr, CA-MDM, x-feat-topo-D, x-feat-row-D, x-util-all, x-feat-addr-D, n-util-ss-D, n-feat-cnbl-REV, x-feat-aerl-sou-D, x-util-strm-D, loc_mdl, FIBER-OPTIC

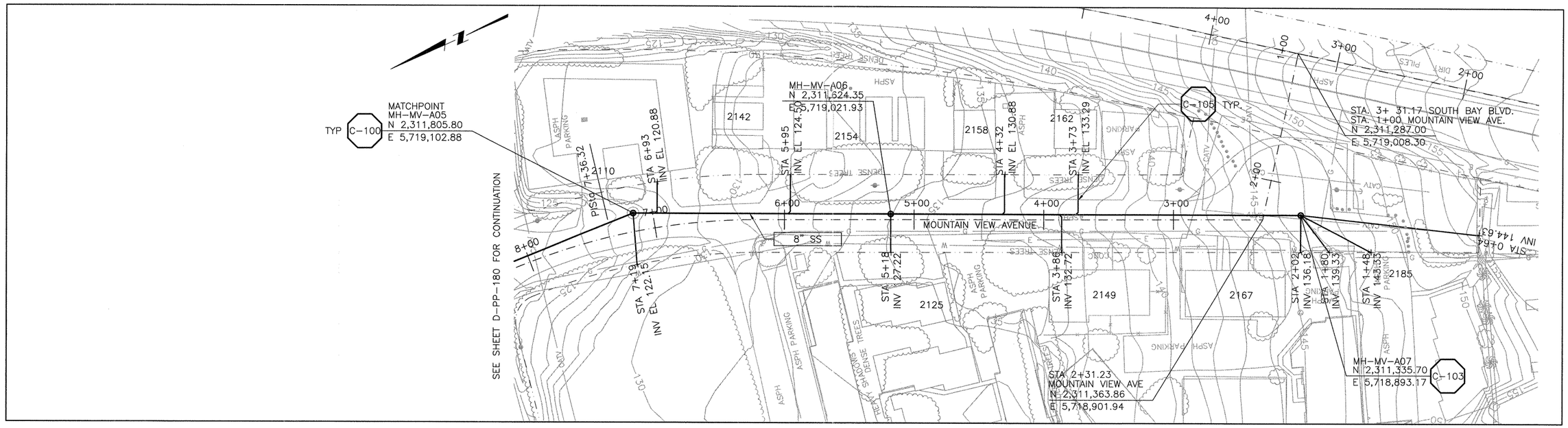


# PLAN ON MOUNTAIN VIEW AVENUE

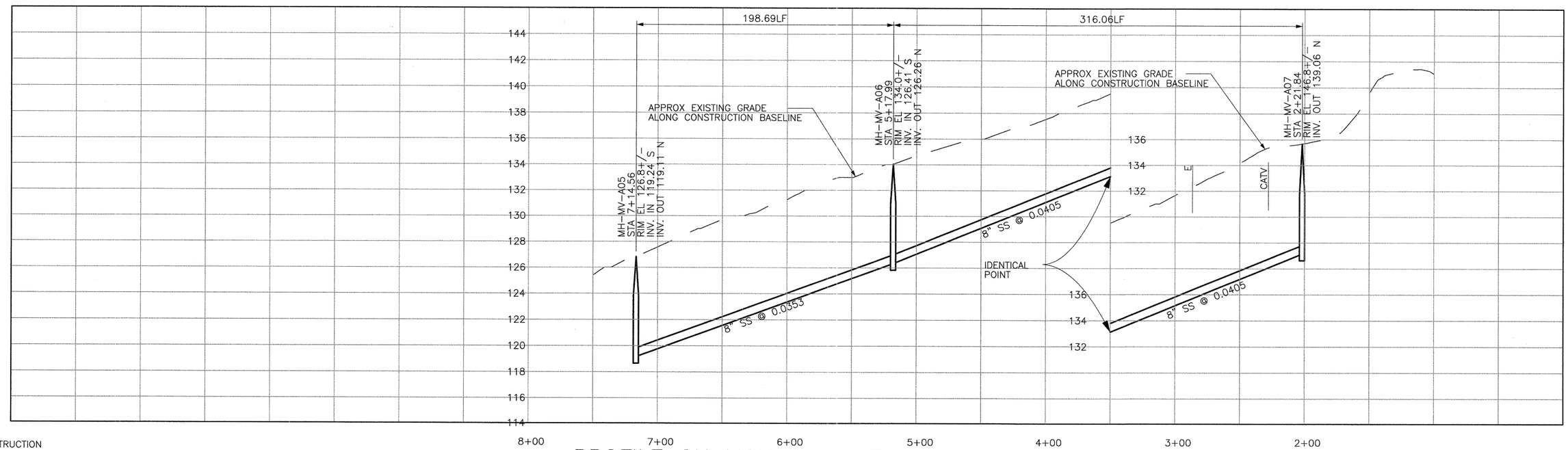


# PROFILE ON MOUNTAIN VIEW AVENUE

SCALE:
HORZ: 1"=40'
VERT: 1"=4'

| REV. NO. | DATE | DRWN | CHKD | REMARKS |
|---|---|---|---|---|
| | | | | |

DESIGNED BY: SDN
DRAWN BY: LLB
CHECKED BY: MDM
DATE: MARCH, 2012

CDM Smith
2295 Gateway Oaks Drive, Suite 240
Sacramento, CA 95833
Tel: (916) 567-9900

IF THIS BAR DOES NOT MEASURE 1" THEN ADJUST SCALE ACCORDINGLY

REGISTERED PROFESSIONAL ENGINEER
MICHAEL D. HINSON
C 061533
Exp. 6/30/13
CIVIL
STATE OF CALIFORNIA

DIGALERT
DIAL TOLL FREE
1-800-642-2444
AT LEAST TWO DAYS BEFORE YOU DIG
UNDERGROUND SERVICE ALERT OF NORTHERN CALIFORNIA

LOS OSOS WASTEWATER COLLECTION SYSTEM

## PLAN AND PROFILE MOUNTAIN VIEW AVE STA. 7+14.56 TO 2+21.84

PROJECT NO. 42502-83120
FILE NAME: D-PP-181
SHEET NO.
D-PP-181

©2012 CDM SMITH ALL RIGHTS RESERVED.
REUSE OF DOCUMENTS: THESE DOCUMENTS AND DESIGNS PROVIDED BY PROFESSIONAL SERVICE, INCORPORATED HEREIN, ARE THE PROPERTY OF CDM SMITH AND ARE NOT TO BE USED, IN WHOLE OR PART, FOR ANY OTHER PROJECT WITHOUT THE WRITTEN AUTHORIZATION OF CDM SMITH.
S:\Los Osos\Walnut Creek\Area D-SS\ d-pp-181 03/12/12 14:57 bullockll XREFS: LosOsos-bdr, CA-MDM, x-feat-topo-D, x-feat-row-D, x-util-all, x-feat-addr-D, n-util-ss-D, n-feat-cnbl-REV, x-feat-aerl-sou-D, x-util-strm-D

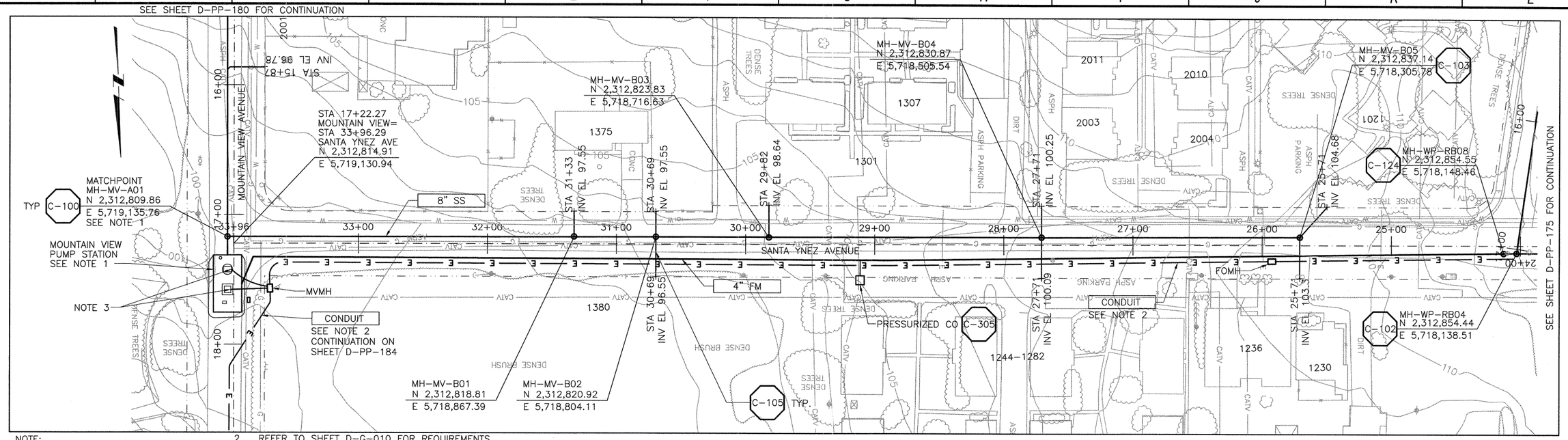


NOTE:

1. SEE SHEET D-C-402 FOR DETAILS.
2. REFER TO SHEET D-G-010 FOR REQUIREMENTS OF ELECTRICAL CONDUIT AND MANHOLES ALONG PIPELINE.
3. TERMINATE CONDUIT AT PUMP STATION AND VALVE VAULT.

# PLAN ON SANTA YNEZ AVENUE

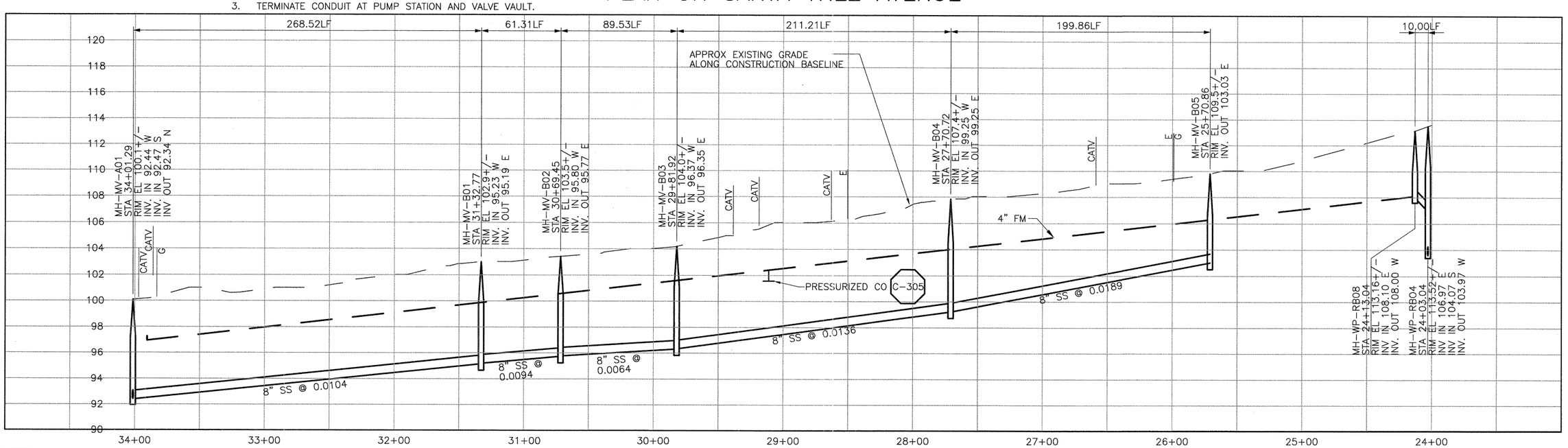


# PROFILE ON SANTA YNEZ AVENUE

SCALE:
HORZ: 1"=40'
VERT: 1"=4'

| REV. NO. | DATE | DRWN | CHKD | REMARKS |
|---|---|---|---|---|

DESIGNED BY: SDN
DRAWN BY: LLB
CHECKED BY: MDM
DATE: MARCH, 2012

CDM Smith
2295 Gateway Oaks Drive, Suite 240
Sacramento, CA 95833
Tel: (916) 567-9900

IF THIS BAR DOES NOT MEASURE 1" THEN ADJUST SCALE ACCORDINGLY

DIGALERT
DIAL TOLL FREE
1-800-642-2444
AT LEAST TWO DAYS BEFORE YOU DIG
UNDERGROUND SERVICE ALERT OF NORTHERN CALIFORNIA

LOS OSOS WASTEWATER COLLECTION SYSTEM

PLAN AND PROFILE
SANTA YNEZ AVE
STA. 34+01.29 TO 24+70.86

PROJECT NO.42502-83120
FILE NAME: D-PP-182
SHEET NO.
D-PP-182

©2012 CDM SMITH ALL RIGHTS RESERVED.
REUSE OF DOCUMENTS: THESE DOCUMENTS AND DESIGNS PROVIDED BY PROFESSIONAL SERVICE, INCORPORATED HEREIN, ARE THE PROPERTY OF CDM SMITH AND ARE NOT TO BE USED, IN WHOLE OR PART, FOR ANY OTHER PROJECT WITHOUT THE WRITTEN AUTHORIZATION OF CDM SMITH.
S:\Los Osos\Walnut Creek\Area D-SS\ d-pp-182 03/12/12 14:56 bullockll XREFS: LosOsos-bdr, CA-MDM, x-feat-topo-D, x-feat-row-D, x-util-all-D, x-feat-addr-D, n-util-ss-D, n-feat-cnbl-REV, x-feat-cerl-sou-D, x-util-strm-D, loc_mdl, FIBER-OPTIC

SEE SHEET D-PP-181 FOR CONTINUATION

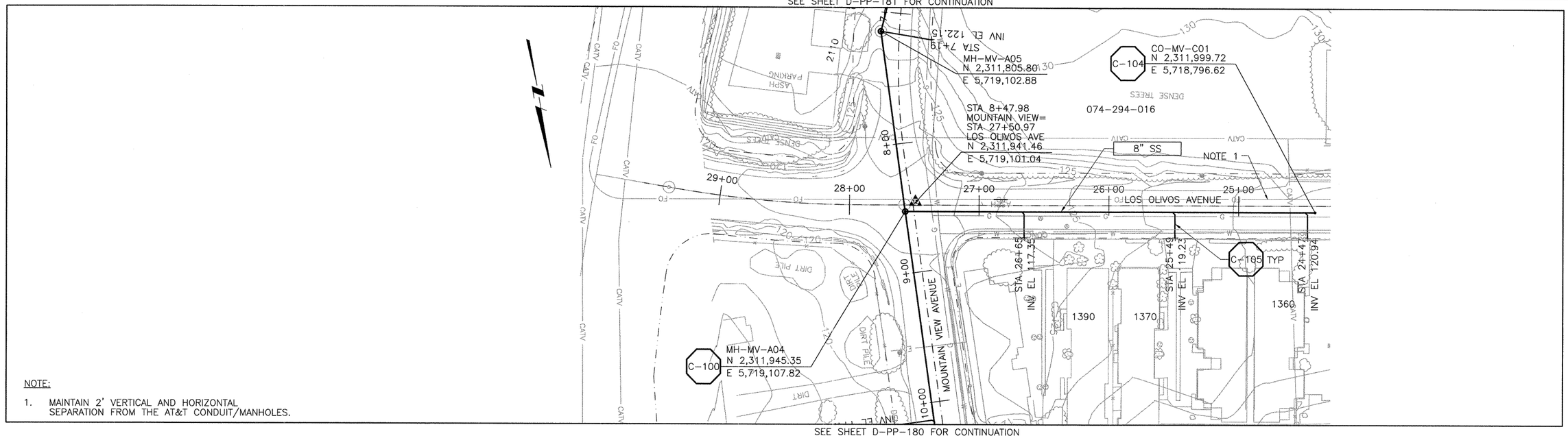


NOTE:

1. MAINTAIN 2' VERTICAL AND HORIZONTAL SEPARATION FROM THE AT&T CONDUIT/MANHOLES.

SEE SHEET D-PP-180 FOR CONTINUATION

## PLAN ON LOS OLIVOS AVENUE

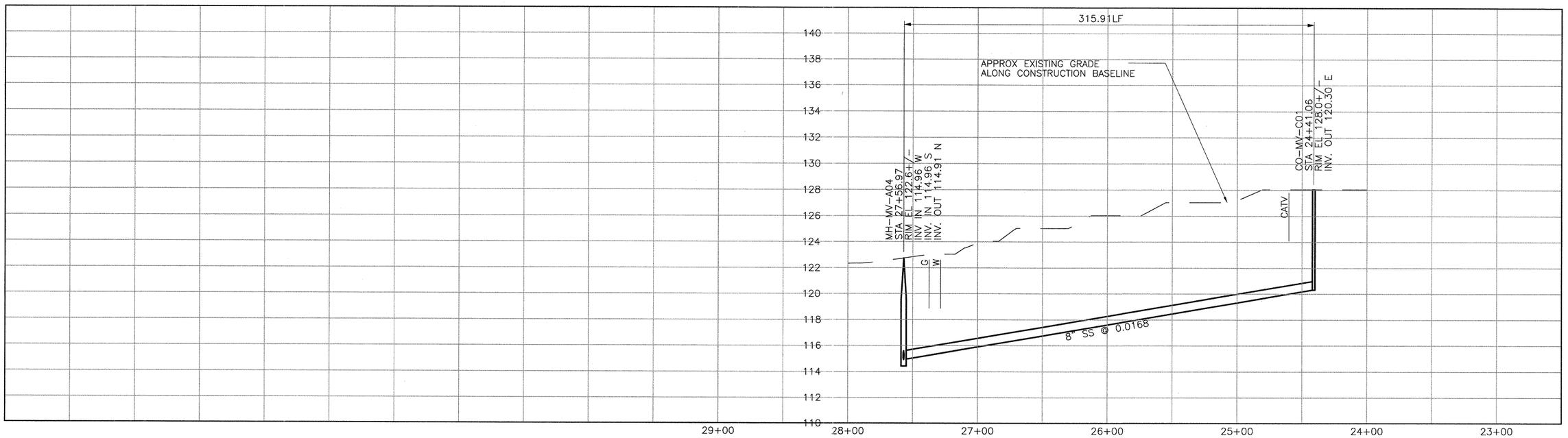


CONSTRUCTION BASELINE STATION

## PROFILE ON LOS OLIVOS AVENUE

SCALE:
HORZ: 1"=40'
VERT: 1"=4'

| REV. NO. | DATE | DRWN | CHKD | REMARKS |
|---|---|---|---|---|

DESIGNED BY: SDN
DRAWN BY: LLB
CHECKED BY: MDM
DATE: MARCH, 2012

CDM Smith
2295 Gateway Oaks Drive, Suite 240
Sacramento, CA 95833
Tel: (916) 567-9900

0 1/2 1
IF THIS BAR DOES NOT MEASURE 1" THEN ADJUST SCALE ACCORDINGLY

REGISTERED PROFESSIONAL ENGINEER
MICHAEL D. MIDDLETON
C 061533
Exp. 6/30/13
CIVIL
STATE OF CALIFORNIA

DIGALERT
DIAL TOLL FREE
1-800-642-2444
AT LEAST TWO DAYS BEFORE YOU DIG
UNDERGROUND SERVICE ALERT OF NORTHERN CALIFORNIA

LOS OSOS WASTEWATER COLLECTION SYSTEM
PLAN AND PROFILE
LOS OLIVOS AVE
STA. 27+56.97 TO 24+41.06

PROJECT NO.42502-83120
FILE NAME: D-PP-183
SHEET NO.
D-PP-183

©2012 CDM SMITH ALL RIGHTS RESERVED.
REUSE OF DOCUMENTS: THESE DOCUMENTS AND DESIGNS PROVIDED BY PROFESSIONAL SERVICE, INCORPORATED HEREIN, ARE THE PROPERTY OF CDM SMITH AND ARE NOT TO BE USED, IN WHOLE OR PART, FOR ANY OTHER PROJECT WITHOUT THE WRITTEN AUTHORIZATION OF CDM SMITH.
S:\Los Osos\Walnut Creek\Area D-SS\ d-pp-183 03/12/12 14:56 bullockll XREFS: LosOsos-bdr, x-feat-topo-D, x-feat-row-D, x-util-all, x-feat-addr-D, n-util-ss-D, n-feat-cnbl-REV, x-feat-aerl-sou-D, CA-MDM, x-util-strm-D

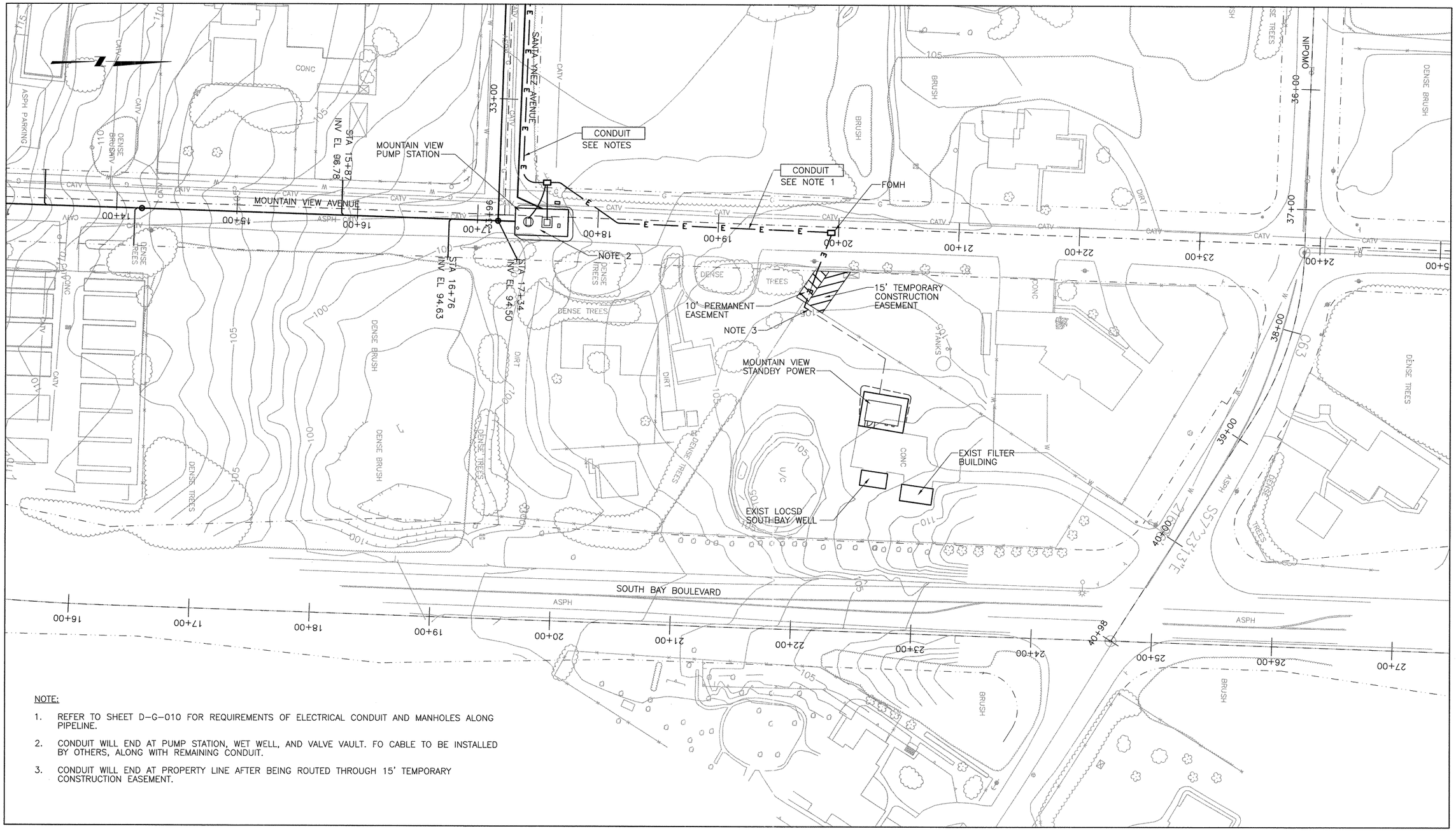


NOTE:

1. REFER TO SHEET D-G-010 FOR REQUIREMENTS OF ELECTRICAL CONDUIT AND MANHOLES ALONG PIPELINE.
2. CONDUIT WILL END AT PUMP STATION, WET WELL, AND VALVE VAULT. FO CABLE TO BE INSTALLED BY OTHERS, ALONG WITH REMAINING CONDUIT.
3. CONDUIT WILL END AT PROPERTY LINE AFTER BEING ROUTED THROUGH 15' TEMPORARY CONSTRUCTION EASEMENT.

CONSTRUCTION BASELINE STATION

# PLAN ON SANTA YNEZ AVENUE

SCALE:
HORZ: 1"=40'
VERT: 1"=4'

| REV. NO. | DATE | DRWN | CHKD | REMARKS |
|---|---|---|---|---|

DESIGNED BY: SDN
DRAWN BY: LLB
CHECKED BY: MDM
DATE: MARCH, 2012

CDM Smith
2295 Gateway Oaks Drive, Suite 240
Sacramento, CA 95833
Tel: (916) 567-9900

0 1/2 1
IF THIS BAR DOES NOT MEASURE 1" THEN ADJUST SCALE ACCORDINGLY

REGISTERED PROFESSIONAL ENGINEER MICHAEL D. MIDDLETON C 061533 Exp. 6/30/13 CIVIL STATE OF CALIFORNIA

DIGALERT
DIAL TOLL FREE 1-800-642-2444 AT LEAST TWO DAYS BEFORE YOU DIG
UNDERGROUND SERVICE ALERT OF NORTHERN CALIFORNIA

LOS OSOS WASTEWATER COLLECTION SYSTEM

MOUNTAIN VIEW AVE CONDUIT PLAN

PROJECT NO. 42502-83120
FILE NAME: D-PP-184
SHEET NO.
D-PP-184

©2012 CDM SMITH ALL RIGHTS RESERVED.
REUSE OF DOCUMENTS: THESE DOCUMENTS AND DESIGNS PROVIDED BY PROFESSIONAL SERVICE, INCORPORATED HEREIN, ARE THE PROPERTY OF CDM SMITH AND ARE NOT TO BE USED, IN WHOLE OR PART, FOR ANY OTHER PROJECT WITHOUT THE WRITTEN AUTHORIZATION OF CDM SMITH.
S:\Los Osos\Walnut Creek\Area D-SS\ d-pp-184 03/12/12 15:17 bullockll XREFS: LosOsos-bdr, CA-MDM, x-feat-topo-D, x-feat-row-D, x-util-all-D, x-feat-addr-D, n-util-ss-D, n-feat-cnbl-REV, x-feat-aerl-sou-D, x-util-strm-D, loc_mdl, FIBER-OPTIC

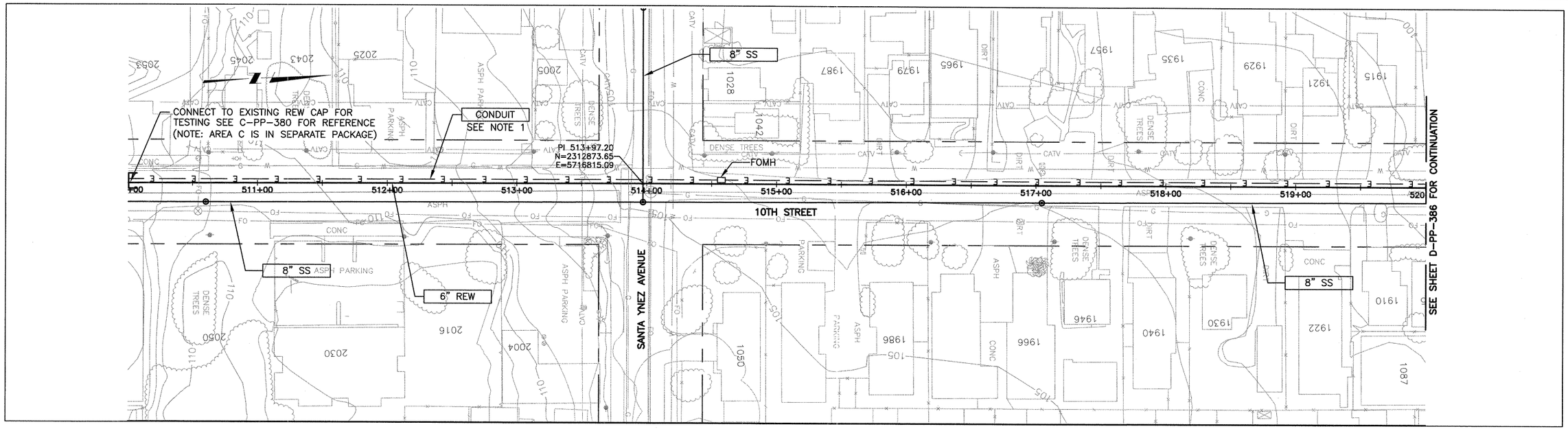


PLAN ON 10TH STREET

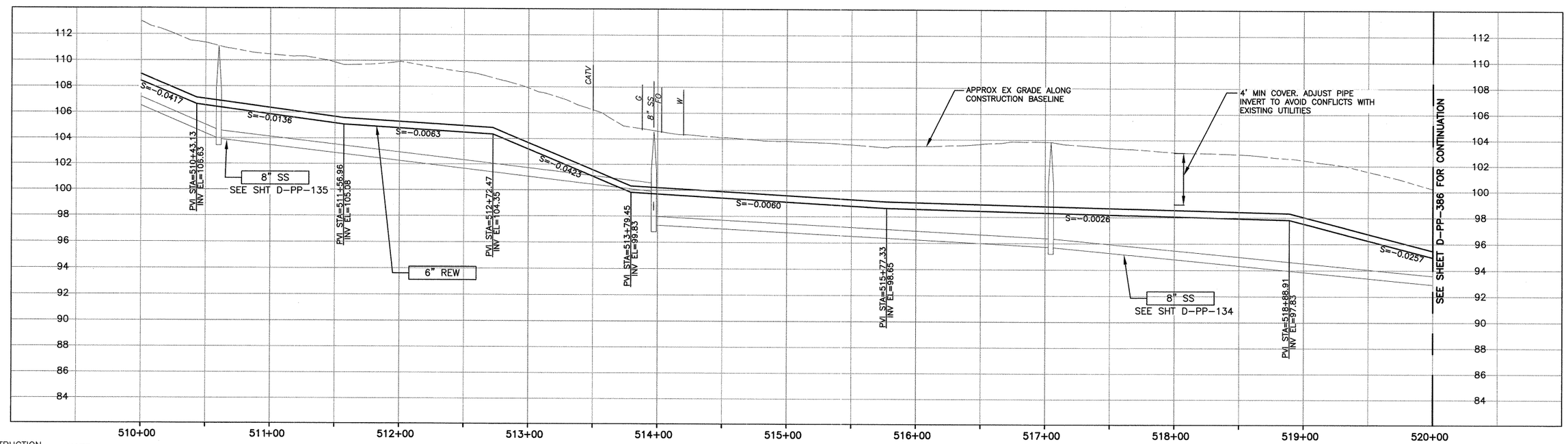


CONSTRUCTION BASELINE STATION

NOTE:

1. REFER TO SHEET D-G-010 FOR REQUIREMENTS OF ELECTRICAL CONDUITS AND MANHOLES ALONG PIPELINE.

PROFILE ON 10TH STREET

SCALE:
HORZ: 1"=40'
VERT: 1"=4'

| REV. NO. | DATE | DRWN | CHKD | REMARKS |
|---|---|---|---|---|

DESIGNED BY: APS
DRAWN BY: RKU
CHECKED BY: MDM
DATE: MARCH 2012

CDM Smith
2295 Gateway Oaks Drive, Suite 240
Sacramento, CA 95833
Tel: (916) 567-9900

0 1/2 1
IF THIS BAR DOES NOT MEASURE 1" THEN ADJUST SCALE ACCORDINGLY

REGISTERED PROFESSIONAL ENGINEER
MICHAEL D. MIDDLETON
C 061533
Exp. 6/30/13
CIVIL
STATE OF CALIFORNIA

DIGALERT
DIAL TOLL FREE
1-800-642-2444
AT LEAST TWO DAYS BEFORE YOU DIG
UNDERGROUND SERVICE ALERT OF NORTHERN CALIFORNIA

LOS OSOS WASTEWATER COLLECTION SYSTEM
PLAN AND PROFILE – REW
10TH STREET
STA 510+00 TO 520+00

PROJECT NO.42502-83120
FILE NAME: D-PP-385
SHEET NO.
D-PP-385

©2012 CDM SMITH ALL RIGHTS RESERVED.
REUSE OF DOCUMENTS: THESE DOCUMENTS AND DESIGNS PROVIDED BY PROFESSIONAL SERVICE, INCORPORATED HEREIN, ARE THE PROPERTY OF CDM SMITH AND ARE NOT TO BE USED, IN WHOLE OR PART, FOR ANY OTHER PROJECT WITHOUT THE WRITTEN AUTHORIZATION OF CDM SMITH.
L:\Los Osos-42502\83120\01-Sheets\02Civil\Area D\400\D-PP-385 02/01/12 11:32 uchimurark XREFS: N-UTIL-SS, N-REW-PROFILE, N-REW-ALIGNMENT, n-util-ss-D, LosOsos-bdr, x-util-all, x-feat-row-D, x-feat-aerl-D, x-feat-addr-D, N-TOPO-AR
A, C-UTIL-SEWR-CONPL, X-UTIL-WATR, x-feat-topo-supp, CA-MDM, loc_mdl, FIBER-OPTIC

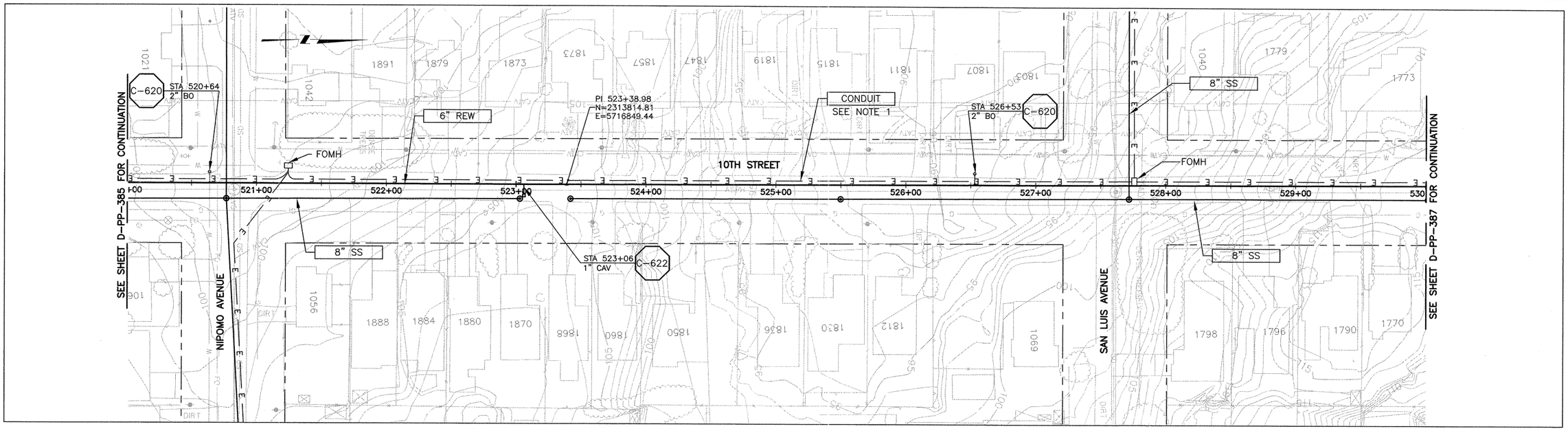


PLAN ON 10TH STREET

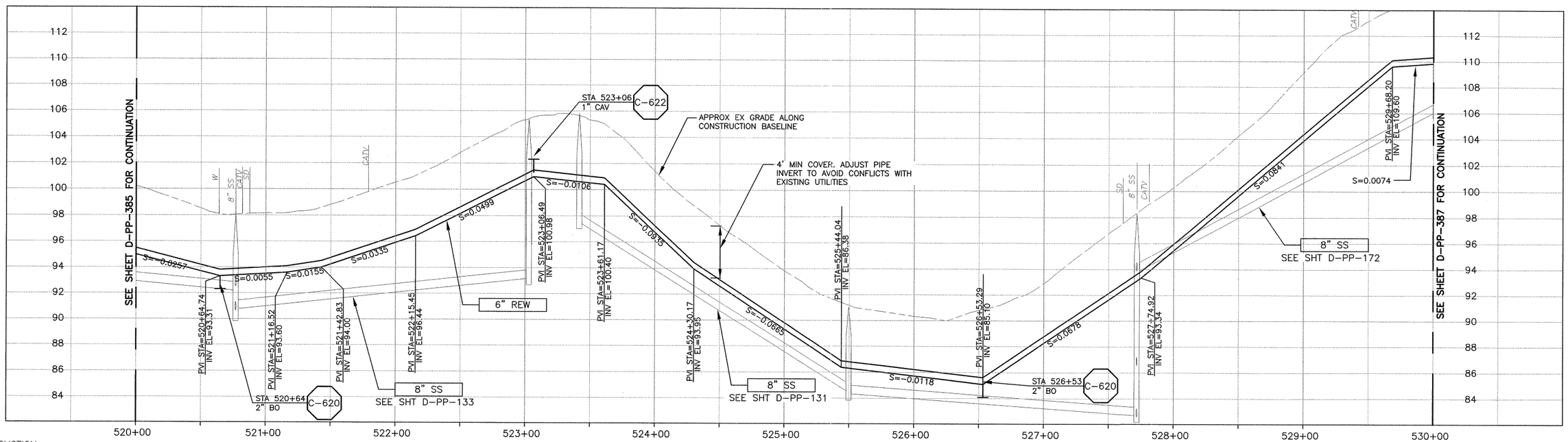


CONSTRUCTION BASELINE STATION

NOTE:

1. REFER TO SHEET D-G-010 FOR REQUIREMENTS OF ELECTRICAL CONDUITS AND MANHOLES ALONG PIPELINE.

PROFILE ON 10TH STREET

SCALE:
HORZ: 1"=40'
VERT: 1"=4'

| REV. NO. | DATE | DRWN | CHKD | REMARKS |
|---|---|---|---|---|

DESIGNED BY: APS
DRAWN BY: RKU
CHECKED BY: MDM
DATE: MARCH 2012

CDM Smith
2295 Gateway Oaks Drive, Suite 240
Sacramento, CA 95833
Tel: (916) 567-9900

0 1/2 1
IF THIS BAR DOES NOT MEASURE 1" THEN ADJUST SCALE ACCORDINGLY

REGISTERED PROFESSIONAL ENGINEER
CHRISTOPHER D. MIDDLETON
C 061533
Exp. 6/30/13
CIVIL
STATE OF CALIFORNIA

DIGALERT
DIAL TOLL FREE
1-800-642-2444
AT LEAST TWO DAYS BEFORE YOU DIG
UNDERGROUND SERVICE ALERT OF NORTHERN CALIFORNIA

LOS OSOS WASTEWATER COLLECTION SYSTEM
PLAN AND PROFILE – REW
10TH STREET
STA 520+00 TO 530+00

PROJECT NO. 42502-83120
FILE NAME: D-PP-386
SHEET NO.
D-PP-386

©2012 CDM SMITH ALL RIGHTS RESERVED.
REUSE OF DOCUMENTS: THESE DOCUMENTS AND DESIGNS PROVIDED BY PROFESSIONAL SERVICE, INCORPORATED HEREIN, ARE THE PROPERTY OF CDM SMITH AND ARE NOT TO BE USED, IN WHOLE OR PART, FOR ANY OTHER PROJECT WITHOUT THE WRITTEN AUTHORIZATION OF CDM SMITH.
L:\Los Osos-42502\83120\01-Sheets\02Civil\AreaD 400\ D-PP-386 02/01/12 11:37 uchimurark XREFS: N-UTIL-SS, X-FEAT-ADDR, N-REW-PROFILE, N-REW-ALIGNMENT, n-util-ss-D, LosOsos-bdr, x-util-all, x-feat-row-D, x-feat-aerl-D, x-feat-addr-D
N-TOPO-AREA A, C-UTIL-SEWR-CONPL, X-UTIL-WATR, x-feat-topo-supp, CA-MDM, loc_mdl, FIBER-OPTIC

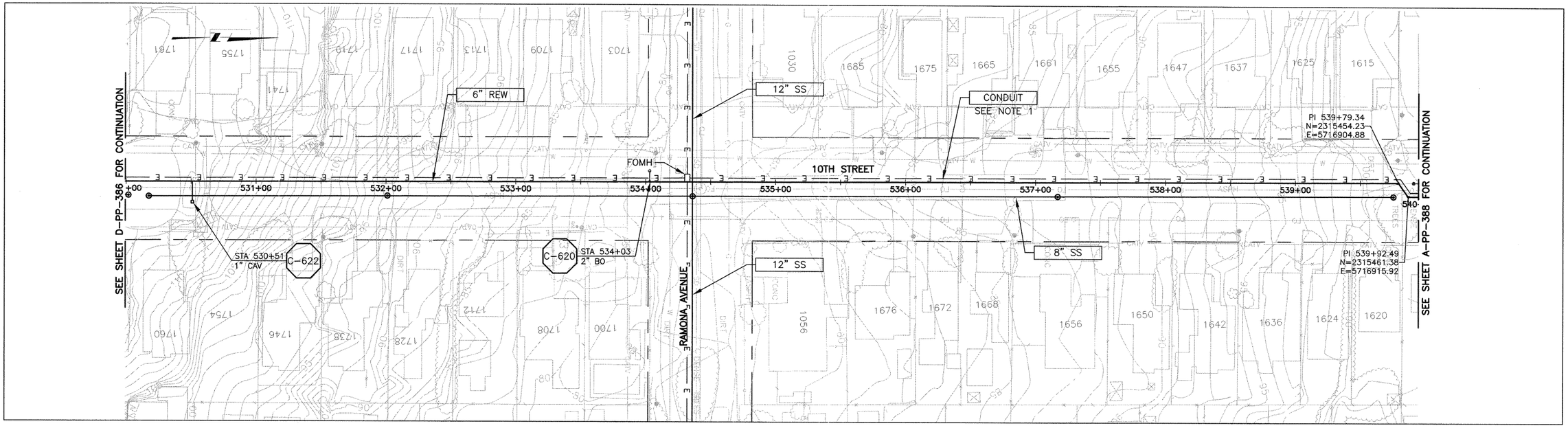


PLAN ON 10TH STREET

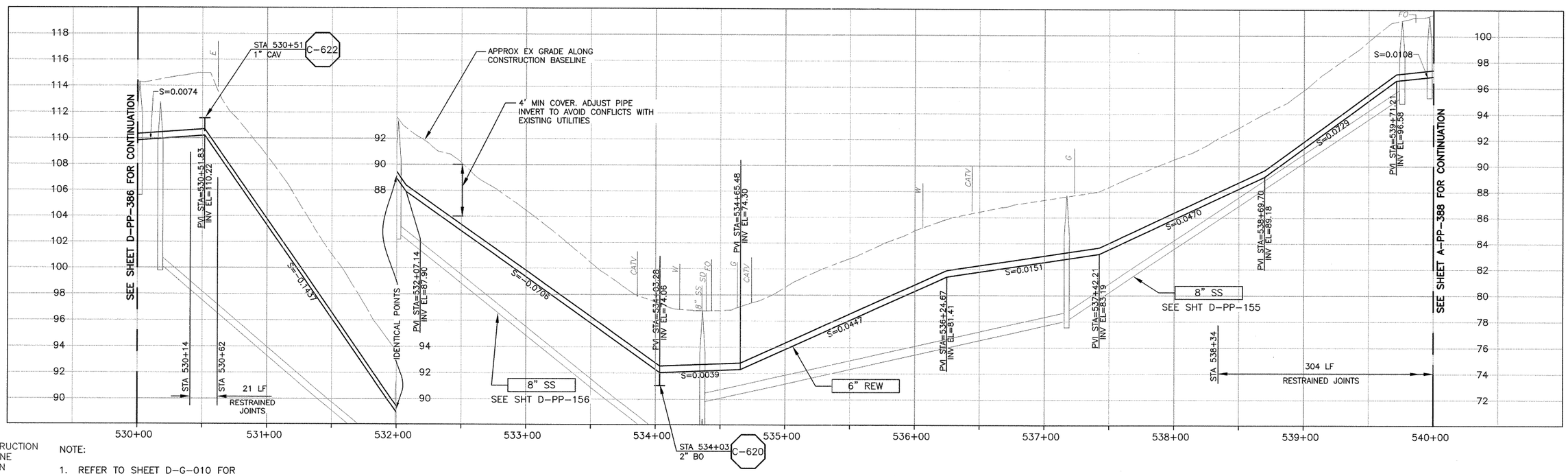


CONSTRUCTION BASELINE STATION

NOTE:

1. REFER TO SHEET D-G-010 FOR REQUIREMENTS OF ELECTRICAL CONDUITS AND MANHOLES ALONG PIPELINE.

PROFILE ON 10TH STREET

SCALE:
HORZ: 1"=40'
VERT: 1"=4'

| REV. NO. | DATE | DRWN | CHKD | REMARKS |
|---|---|---|---|---|

DESIGNED BY: APS
DRAWN BY: RKU
CHECKED BY: MDM
DATE: MARCH 2012

CDM Smith
2295 Gateway Oaks Drive, Suite 240
Sacramento, CA 95833
Tel: (916) 567-9900

IF THIS BAR DOES NOT MEASURE 1" THEN ADJUST SCALE ACCORDINGLY

DIGALERT
DIAL TOLL FREE
1-800-642-2444
AT LEAST TWO DAYS BEFORE YOU DIG
UNDERGROUND SERVICE ALERT OF NORTHERN CALIFORNIA

LOS OSOS WASTEWATER COLLECTION SYSTEM
PLAN AND PROFILE – REW
10TH STREET
STA 530+00 TO 540+00

PROJECT NO.42502-83120
FILE NAME: D-PP-387
SHEET NO.
D-PP-387

©2012 CDM SMITH ALL RIGHTS RESERVED.
REUSE OF DOCUMENTS: THESE DOCUMENTS AND DESIGNS PROVIDED BY PROFESSIONAL SERVICE, INCORPORATED HEREIN, ARE THE PROPERTY OF CDM SMITH AND ARE NOT TO BE USED, IN WHOLE OR PART, FOR ANY OTHER PROJECT WITHOUT THE WRITTEN AUTHORIZATION OF CDM SMITH.
L:\Los Osos-42502\83120\01-Sheets\02Civil\AreaD 400\ D-PP-387 12/13/11 15:07 uchimurark XREFS: N-UTIL-SS, X-FEAT-TOPO, N-REW-PROFILE, N-REW-ALIGNMENT, n-util-ss-D, LosOsos-bdr, x-util-oil, x-feat-row-D, x-feat-topo-D,
x-feat-gen-sou-D, x-feat-gen-D, x-feat-addr-D, n-feat-cnbl-REV, N-FEAT-CNBL, N-FM-ALIGNMENT

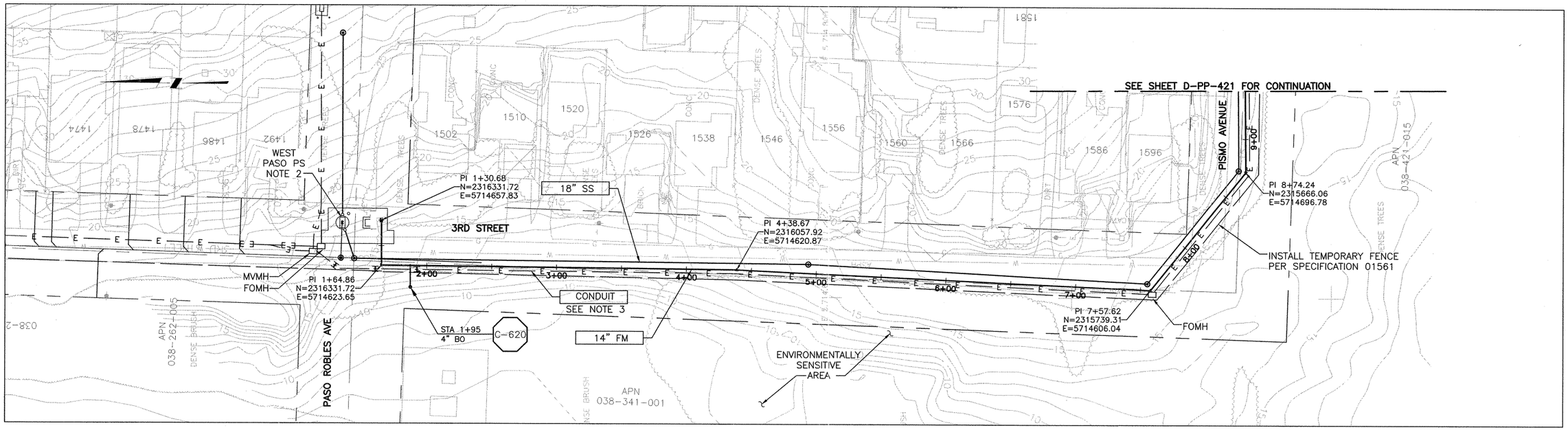


PLAN ON 3RD STREET

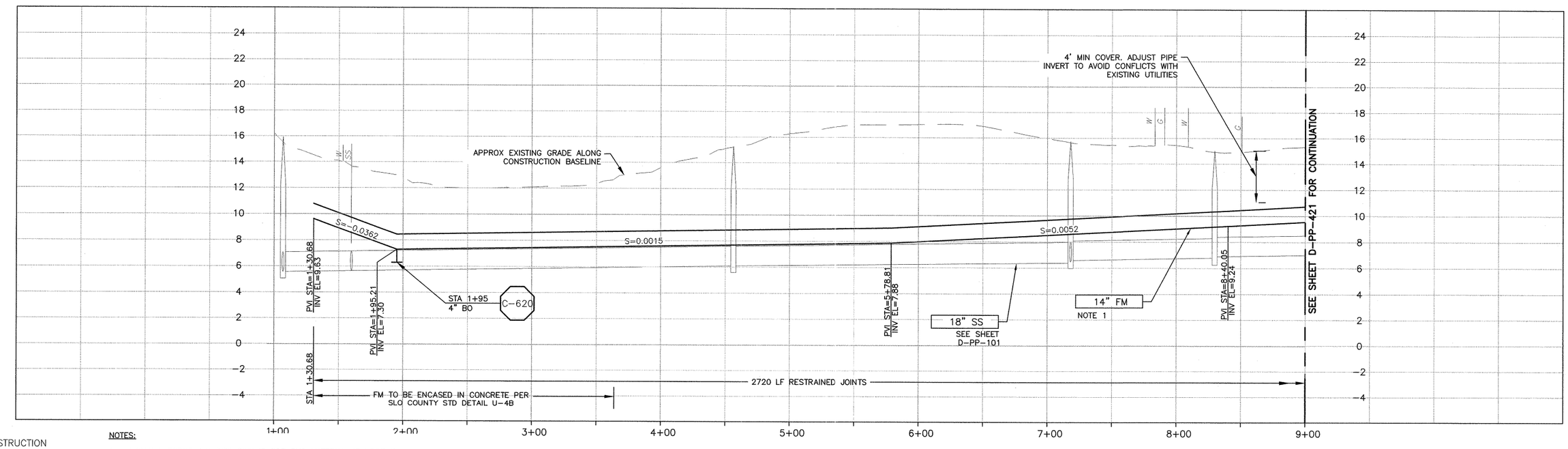


CONSTRUCTION BASELINE STATION

NOTES:

1. NOMINAL FORCEMAIN PIPE SIZE IS FOR PVC MATERIAL. IF HDPE IS UTILIZED, NOMINAL PIPE SIZE SHALL BE 16".
2. SEE SHEET A-C-103 FOR DETAILS.
3. REFER TO SHEET D-G-010 FOR REQUIREMENTS OF ELECTRICAL CONDUITS AND MANHOLES ALONG PIPELINE.

PROFILE ON 3RD STREET

SCALE:
HORZ: 1"=40'
VERT: 1"=4'

| REV. NO. | DATE | DRWN | CHKD | REMARKS |
|---|---|---|---|---|

DESIGNED BY: APS
DRAWN BY: RKU
CHECKED BY: MDM
DATE: MARCH 2012

CDM Smith
2295 Gateway Oaks Drive, Suite 240
Sacramento, CA 95833
Tel: (916) 567-9900

0 1/2 1
IF THIS BAR DOES NOT MEASURE 1" THEN ADJUST SCALE ACCORDINGLY

REGISTERED PROFESSIONAL ENGINEER
MICHAEL D. MADISON
C 061533
Exp. 6/30/13
CIVIL
STATE OF CALIFORNIA

DIGALERT
DIAL TOLL FREE 1-800-642-2444
AT LEAST TWO DAYS BEFORE YOU DIG
UNDERGROUND SERVICE ALERT OF NORTHERN CALIFORNIA

LOS OSOS WASTEWATER COLLECTION SYSTEM
PLAN AND PROFILE – FM
3RD STREET
STA 1+30.68 TO 9+00

PROJECT NO. 42502-83120
FILE NAME: D-PP-420
SHEET NO.
D-PP-420

©2012 CDM SMITH ALL RIGHTS RESERVED.
REUSE OF DOCUMENTS: THESE DOCUMENTS AND DESIGNS PROVIDED BY PROFESSIONAL SERVICE, INCORPORATED HEREIN, ARE THE PROPERTY OF CDM SMITH AND ARE NOT TO BE USED, IN WHOLE OR PART, FOR ANY OTHER PROJECT WITHOUT THE WRITTEN AUTHORIZATION OF CDM SMITH.
L:\Los Osos-42502\83120\01-Sheets\02Civil\AreaD 400\ D-PP-420 01/03/12 12:00 uchimurark XREFS: N-FM-ALIGNMENT, N-FM-PROFILE-CDA AREAS, n-util-ss-D, x-util-strm-D, x-util-all, LosOsos-bdr, x-feat-addr-D, x-feat-aerl-D, x-feat-aerl-sou-D, x-feat-row-D, x-feat-topp-D, n-feat-cnbl-REV, n-feat-ps, N-UTIL-SS, CA-MDM

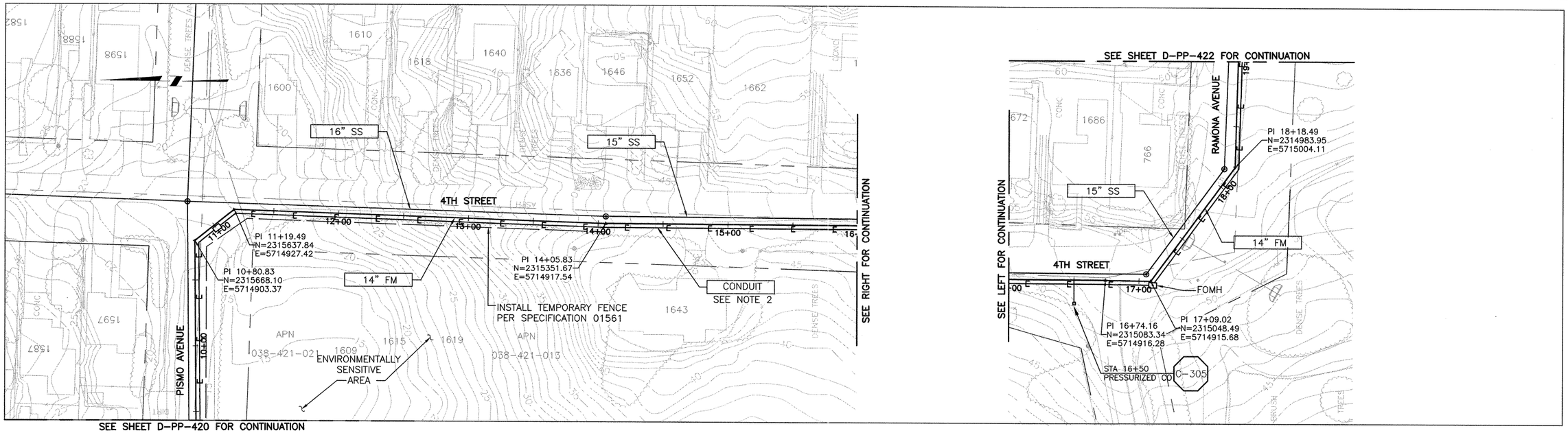


PLAN ON 4TH STREET

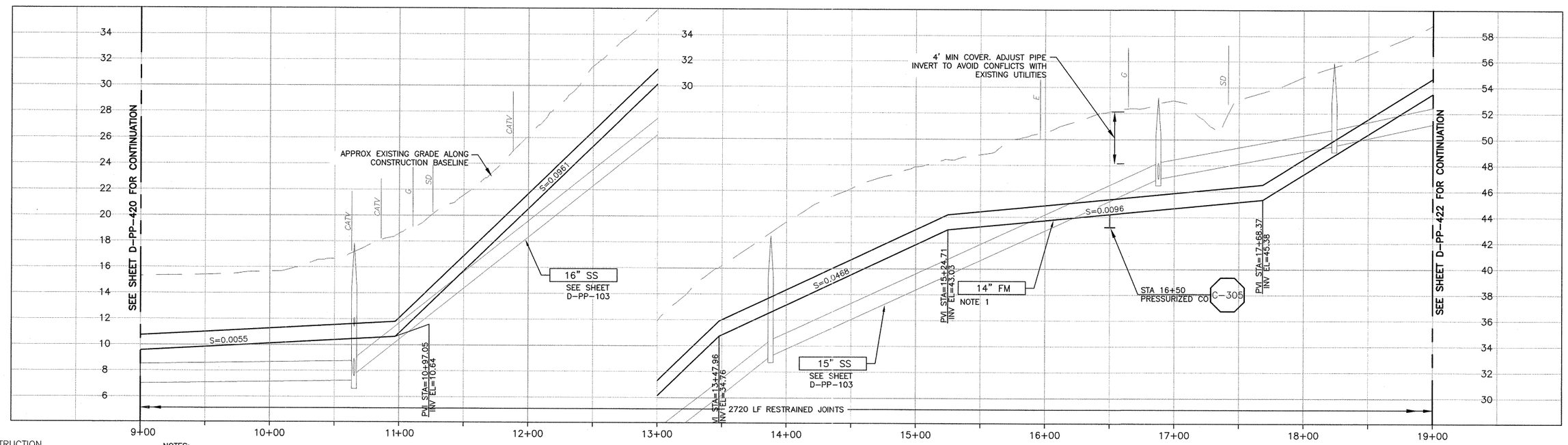


CONSTRUCTION
BASELINE
STATION

NOTES:

1. NOMINAL FORCEMAIN PIPE SIZE IS FOR PVC MATERIAL. IF HDPE IS UTILIZED, NOMINAL PIPE SIZE SHALL BE 16".
2. REFER TO SHEET D-G-010 FOR REQUIREMENTS OF ELECTRICAL CONDUITS AND MANHOLES ALONG PIPELINE.

PROFILE ON 4TH STREET

SCALE:
HORZ: 1"=40'
VERT: 1"=4'

| REV. NO. | DATE | DRWN | CHKD | REMARKS |
|---|---|---|---|---|

DESIGNED BY: APS
DRAWN BY: RKU
CHECKED BY: MDM
DATE: MARCH 2012

CDM Smith
2295 Gateway Oaks Drive, Suite 240
Sacramento, CA 95833
Tel: (916) 567-9900

0 1/2 1
IF THIS BAR DOES NOT MEASURE 1" THEN ADJUST SCALE ACCORDINGLY

REGISTERED PROFESSIONAL ENGINEER
MICHAEL D. MIDDLETON
C 061533
Exp. 6/30/13
CIVIL
STATE OF CALIFORNIA

DIGALERT
DIAL TOLL FREE
1-800-642-2444
AT LEAST TWO DAYS BEFORE YOU DIG
UNDERGROUND SERVICE ALERT OF NORTHERN CALIFORNIA

LOS OSOS WASTEWATER COLLECTION SYSTEM
PLAN AND PROFILE – FM
4TH STREET
STA 9+00 TO 19+00

PROJECT NO. 42502-83120
FILE NAME: D-PP-421
SHEET NO.
D-PP-421

©2012 CDM SMITH ALL RIGHTS RESERVED.
REUSE OF DOCUMENTS: THESE DOCUMENTS AND DESIGNS PROVIDED BY PROFESSIONAL SERVICE, INCORPORATED HEREIN, ARE THE PROPERTY OF CDM SMITH AND ARE NOT TO BE USED, IN WHOLE OR PART, FOR ANY OTHER PROJECT WITHOUT THE WRITTEN AUTHORIZATION OF CDM SMITH.
L:\Los Osos-42502\83120\01-Sheets\02Civil\AreaD 400\ D-PP-420 01/03/12 12:00 uchimurark XREFS: N-FM-ALIGNMENT, N-FM-PROFILE-CDA AREAS, n-util-ss-D, x-util-strm-D, x-util-all, LosOsos-bdr, x-feat-addr-D, x-feat-aerl-D, x-feat-aerl-sou-D, x-feat-row-D, x-feat-topo-D, n-feat-cnbl-REV, n-feat-ps, N-UTIL-SS, CA-MDM

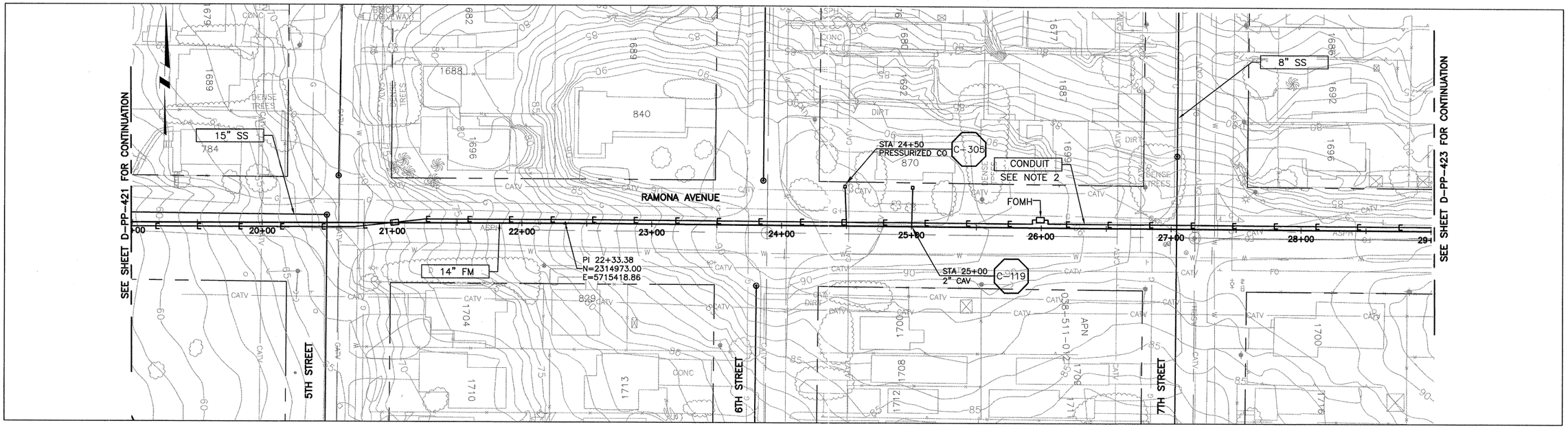


PLAN ON RAMONA AVENUE

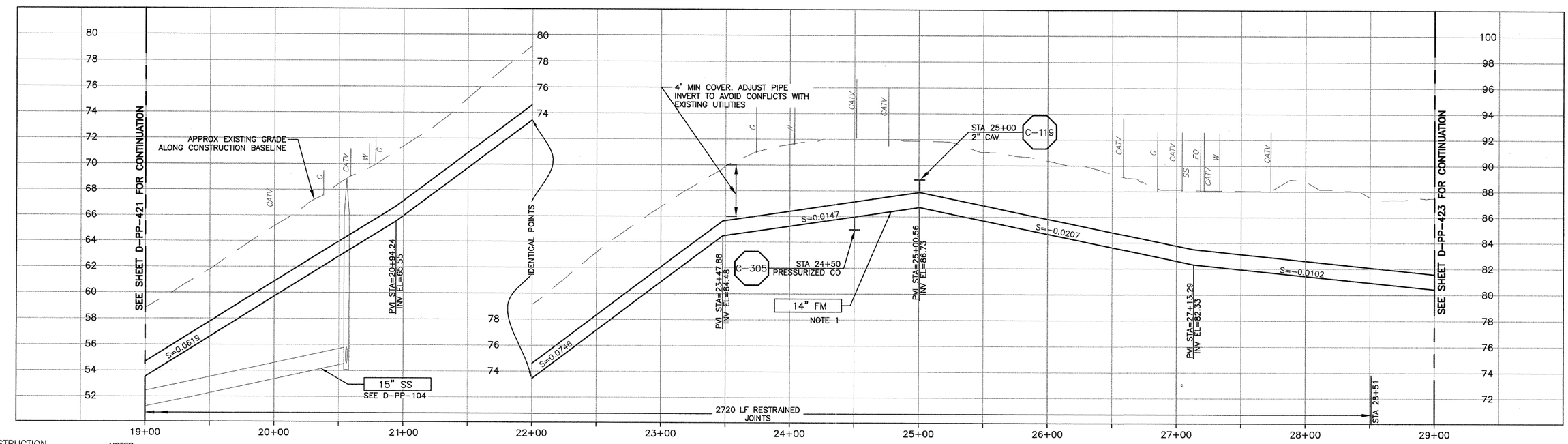


CONSTRUCTION
BASELINE
STATION

NOTES:

1. NOMINAL FORCEMAIN PIPE SIZE IS FOR PVC MATERIAL. IF HDPE IS UTILIZED, NOMINAL PIPE SIZE SHALL BE 16".
2. REFER TO SHEET D-G-010 FOR REQUIREMENTS OF ELECTRICAL CONDUITS AND MANHOLES ALONG THE PIPELINE.

PROFILE ON RAMONA AVENUE

SCALE:
HORZ: 1"=40'
VERT: 1"=4'

| REV. NO. | DATE | DRWN | CHKD | REMARKS |
|---|---|---|---|---|

DESIGNED BY: APS
DRAWN BY: RKU
CHECKED BY: MDM
DATE: MARCH 2012

CDM Smith
2295 Gateway Oaks Drive, Suite 240
Sacramento, CA 95833
Tel: (916) 567-9900

0 1/2 1
IF THIS BAR DOES NOT MEASURE 1" THEN ADJUST SCALE ACCORDINGLY

REGISTERED PROFESSIONAL ENGINEER
MICHAEL D. MIDDLETON
C 061533
Exp. 6/30/13
CIVIL
STATE OF CALIFORNIA

DIGALERT
DIAL TOLL FREE
1-800-642-2444
AT LEAST TWO DAYS BEFORE YOU DIG
UNDERGROUND SERVICE ALERT OF NORTHERN CALIFORNIA

LOS OSOS WASTEWATER COLLECTION SYSTEM
PLAN AND PROFILE – FM
RAMONA AVE
STA 19+00 TO 29+00

PROJECT NO.42502-83120
FILE NAME: D-PP-422
SHEET NO.
D-PP-422

©2012 CDM SMITH ALL RIGHTS RESERVED.
REUSE OF DOCUMENTS: THESE DOCUMENTS AND DESIGNS PROVIDED BY PROFESSIONAL SERVICE, INCORPORATED HEREIN, ARE THE PROPERTY OF CDM SMITH AND ARE NOT TO BE USED, IN WHOLE OR PART, FOR ANY OTHER PROJECT WITHOUT THE WRITTEN AUTHORIZATION OF CDM SMITH.

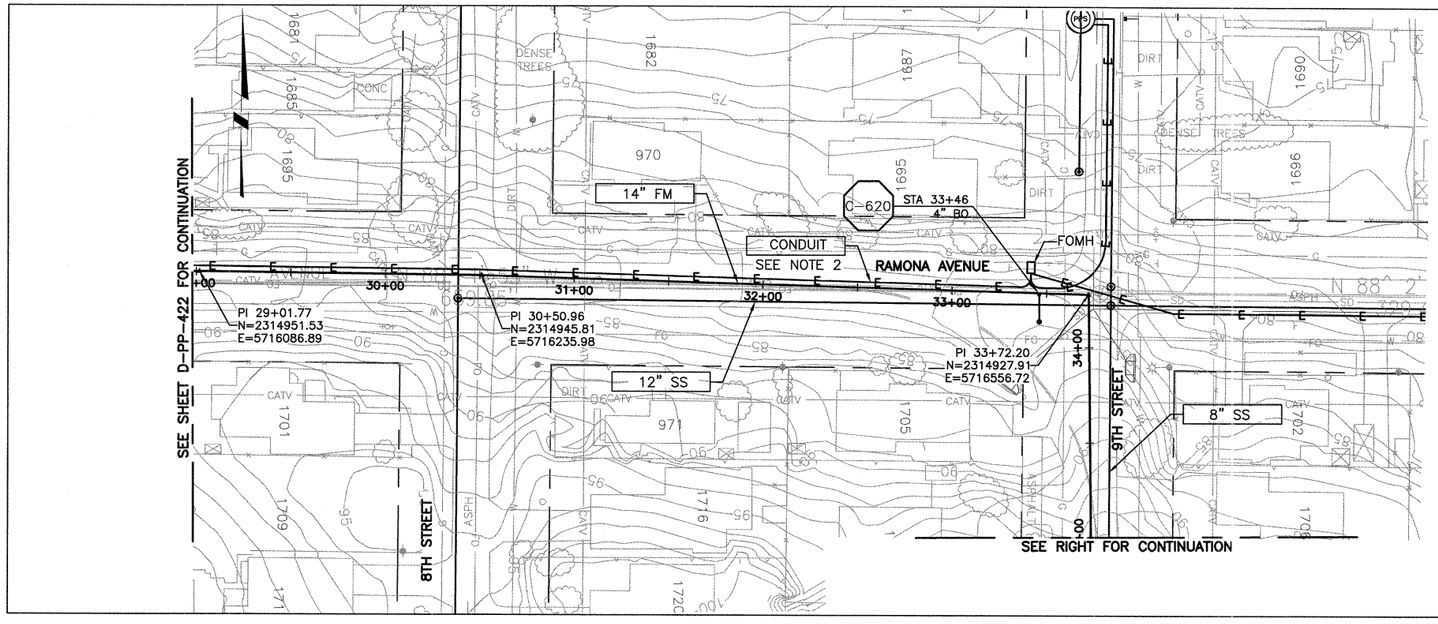


PLAN ON RAMONA AVENUE

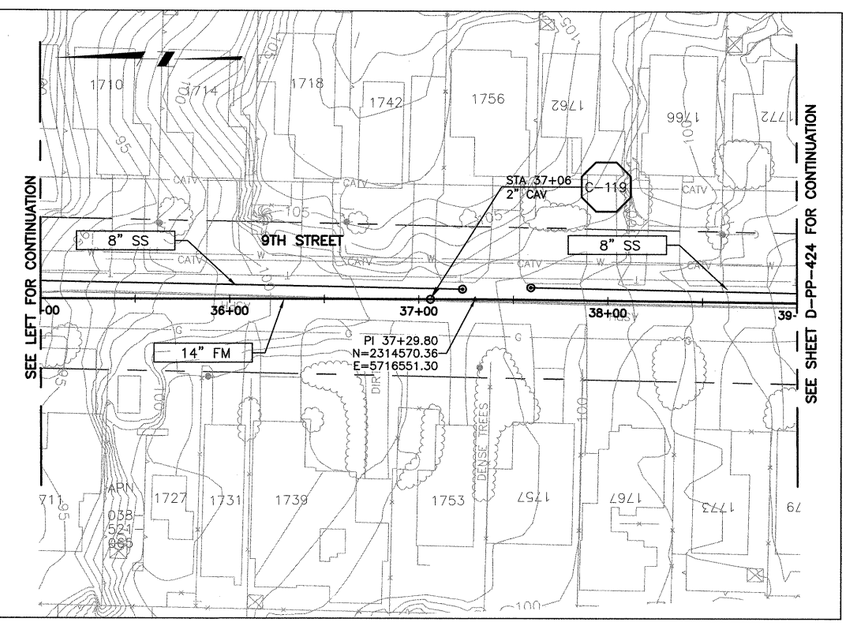


PLAN ON 9TH STREET

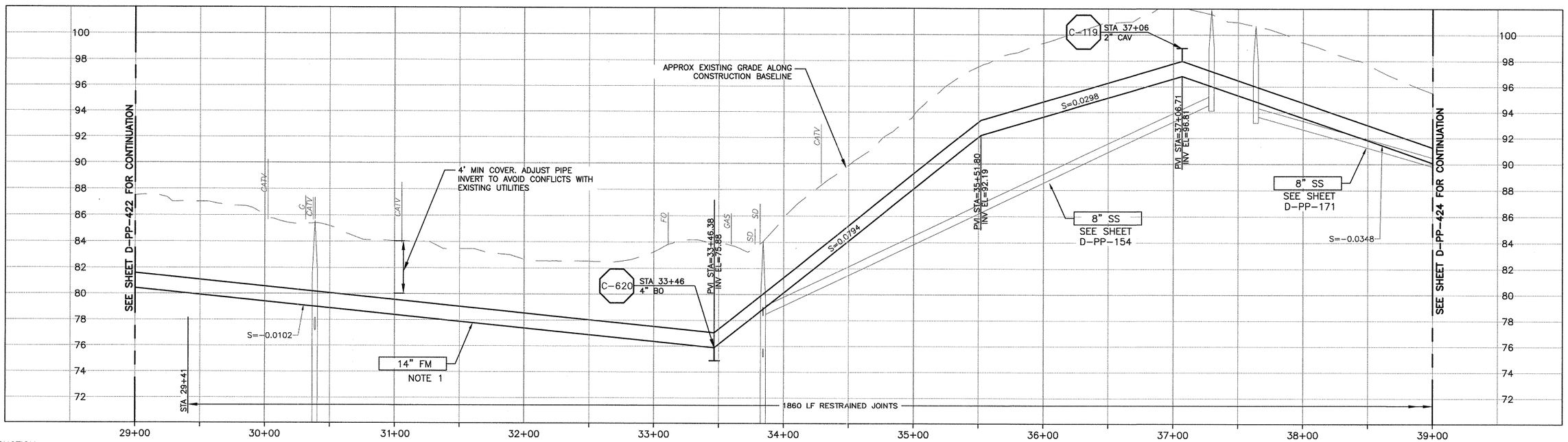


PROFILE ON RAMONA AVENUE & 9TH STREET

NOTES:

1. NOMINAL FORCEMAIN PIPE SIZE IS FOR PVC MATERIAL. IF HDPE IS UTILIZED, NOMINAL PIPE SIZE SHALL BE 16".
2. REFER TO SHEET D-G-010 FOR REQUIREMENTS OF ELECTRICAL CONDUITS AND MANHOLES ALONG THE PIPELINE.

SCALE:
HORZ: 1"=40'
VERT: 1"=4'

| REV. NO. | DATE | DRWN | CHKD | REMARKS |
|---|---|---|---|---|

DESIGNED BY: APS
DRAWN BY: RKU
CHECKED BY: MDM
DATE: MARCH 2012

CDM Smith
2295 Gateway Oaks Drive, Suite 240
Sacramento, CA 95833
Tel: (916) 567-9900

IF THIS BAR DOES NOT MEASURE 1" THEN ADJUST SCALE ACCORDINGLY

DIGALERT
DIAL TOLL FREE
1-800-642-2444
AT LEAST TWO DAYS BEFORE YOU DIG
UNDERGROUND SERVICE ALERT OF NORTHERN CALIFORNIA

LOS OSOS WASTEWATER COLLECTION SYSTEM
PLAN AND PROFILE – FM
RAMONA AVENUE & 9TH STREET
STA 29+00 TO 39+00

PROJECT NO.42502-83120
FILE NAME: D-PP-423
SHEET NO.
D-PP-423

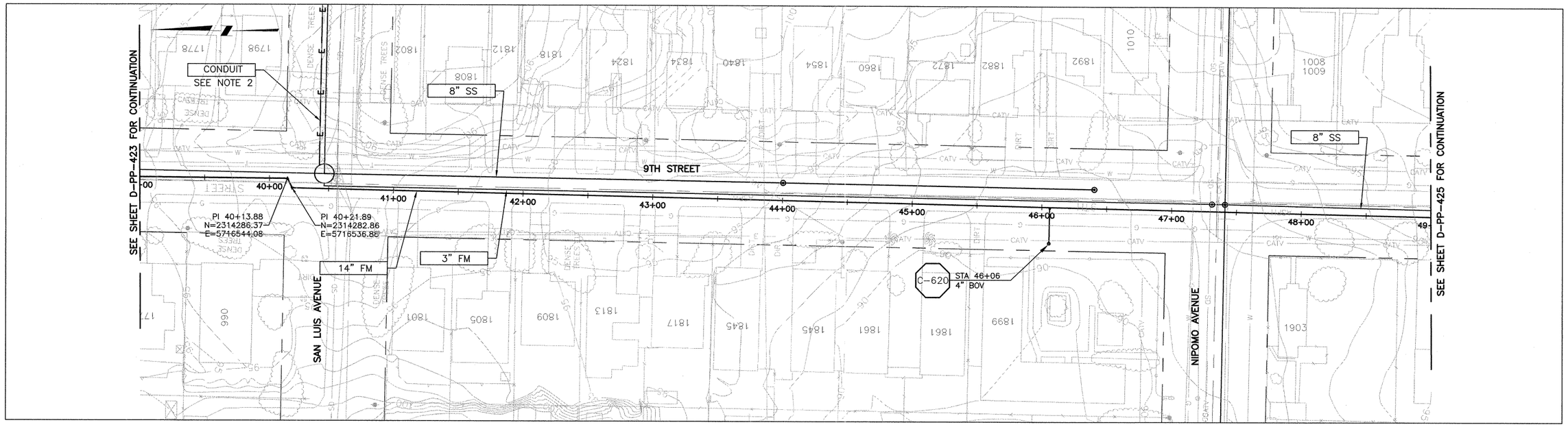


PLAN ON 9TH STREET

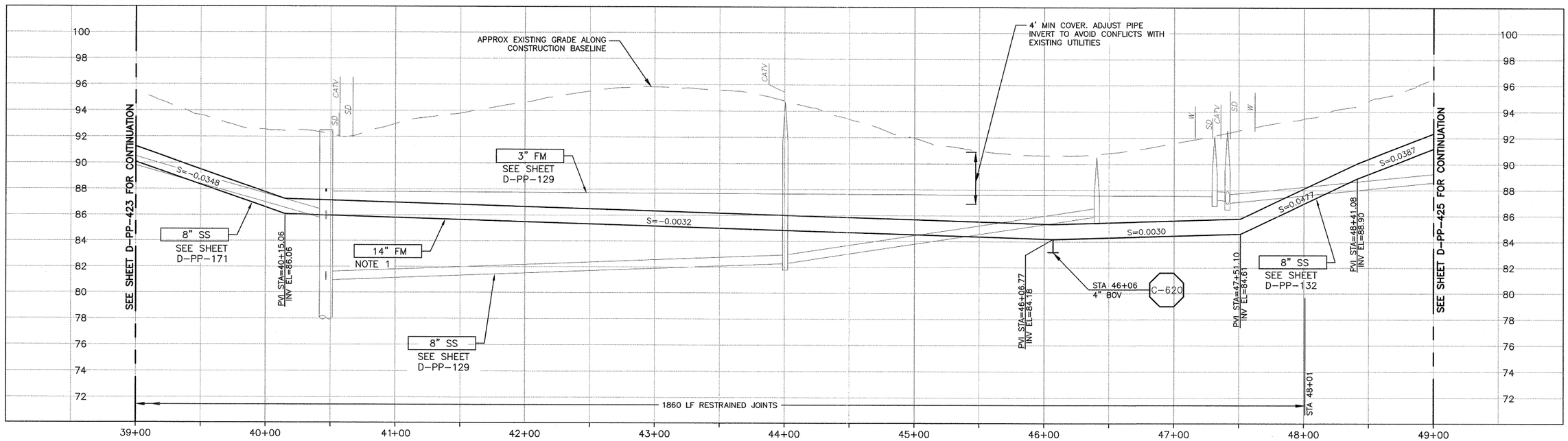


CONSTRUCTION BASELINE STATION

NOTES:

1. NOMINAL FORCEMAIN PIPE SIZE IS FOR PVC MATERIAL. IF HDPE IS UTILIZED, NOMINAL PIPE SIZE SHALL BE 16".
2. REFER TO SHEET D-G-010 FOR REQUIREMENTS OF ELECTRICAL CONDUITS AND MANHOLES ALONG PIPELINE.

PROFILE ON 9TH STREET

SCALE:
HORZ: 1"=40'
VERT: 1"=4'

| REV. NO. | DATE | DRWN | CHKD | REMARKS |
|---|---|---|---|---|

DESIGNED BY: APS
DRAWN BY: RKU
CHECKED BY: MDM
DATE: MARCH 2012

CDM Smith
2295 Gateway Oaks Drive, Suite 240
Sacramento, CA 95833
Tel: (916) 567-9900

0 1/2 1
IF THIS BAR DOES NOT MEASURE 1" THEN ADJUST SCALE ACCORDINGLY

REGISTERED PROFESSIONAL ENGINEER
MICHAEL D. MIDDLETON
C 061533
Exp. 6/30/13
CIVIL
STATE OF CALIFORNIA

DIGALERT
DIAL TOLL FREE
1-800-642-2444
AT LEAST TWO DAYS BEFORE YOU DIG
UNDERGROUND SERVICE ALERT OF NORTHERN CALIFORNIA

LOS OSOS WASTEWATER COLLECTION SYSTEM
PLAN AND PROFILE – FM
9TH STREET
STA 39+00 TO 49+00

PROJECT NO.42502-83120
FILE NAME: D-PP-424
SHEET NO.
D-PP-424

I:\Los Osos-42502\83120\01-Sheets\02Civil\AreaD 400\ D-PP-424 02/14/12 09:29 uchimurark XREFS: N-FM-ALIGNMENT, N-FM-PROFILE-CDA AREAS, n-util-ss-D, x-util-strm-D, x-util-all, LosOsos-bdr, x-feat-addr-D, x-feat-aerl-D, x-feat-aerl-squ-D, x-feat-row-D, x-feat-topo-D, N-UTIL-SS, CA-MDM, AREA-C-MIDTOWN-PS, loc mdl

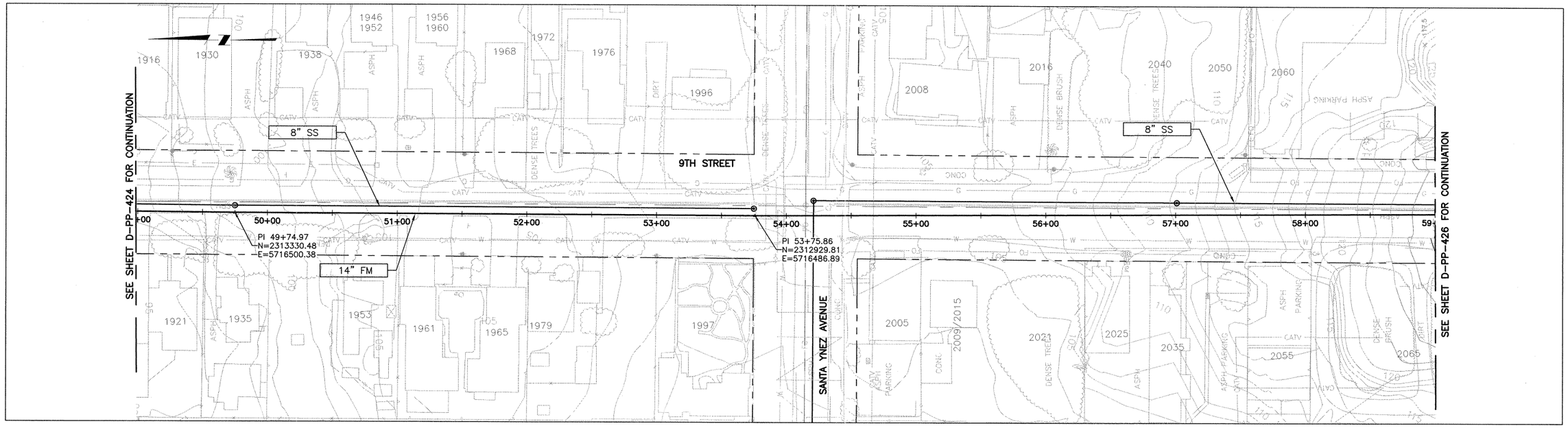


PLAN ON 9TH STREET

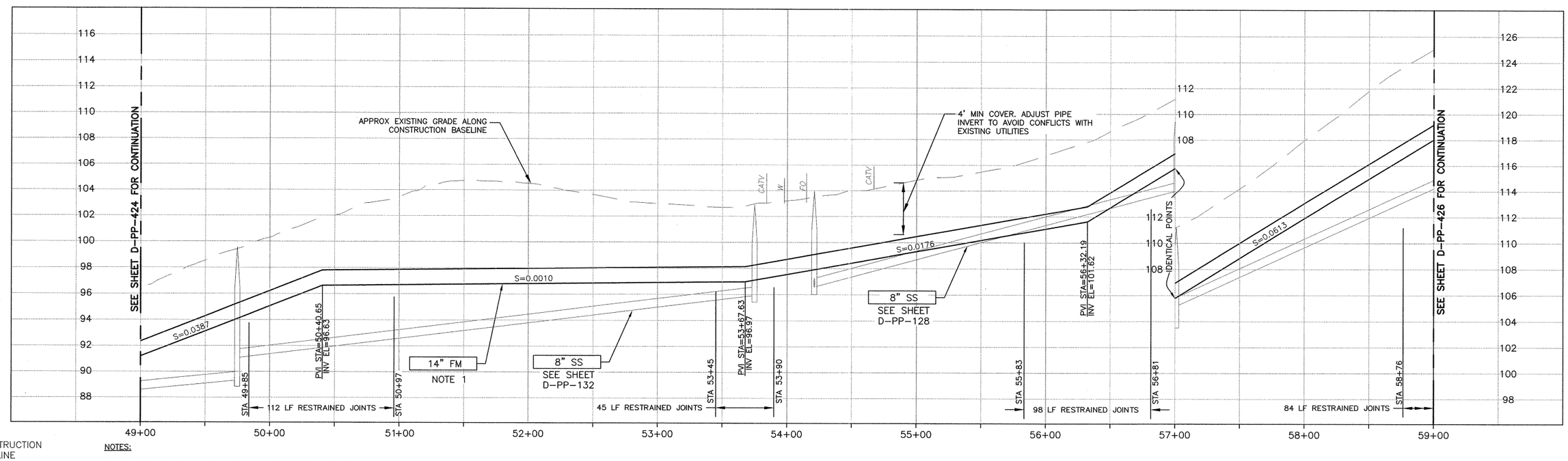


CONSTRUCTION BASELINE STATION

NOTES:

1. NOMINAL FORCEMAIN PIPE SIZE IS FOR PVC MATERIAL. IF HDPE IS UTILIZED, NOMINAL PIPE SIZE SHALL BE 16".

PROFILE ON 9TH STREET

SCALE:
HORZ: 1"=40'
VERT: 1"=4'

| REV. NO. | DATE | DRWN | CHKD | REMARKS |
|---|---|---|---|---|

DESIGNED BY: APS
DRAWN BY: RKU
CHECKED BY: MDM
DATE: MARCH 2012

CDM Smith
2295 Gateway Oaks Drive, Suite 240
Sacramento, CA 95833
Tel: (916) 567-9900

0 1/2 1
IF THIS BAR DOES NOT MEASURE 1" THEN ADJUST SCALE ACCORDINGLY

REGISTERED PROFESSIONAL ENGINEER
MICHAEL D. MIDDLE
C 061533
Exp. 6/30/13
CIVIL
STATE OF CALIFORNIA
3-14-12

DIGALERT
DIAL TOLL FREE
1-800-642-2444
AT LEAST TWO DAYS BEFORE YOU DIG
UNDERGROUND SERVICE ALERT OF NORTHERN CALIFORNIA

LOS OSOS WASTEWATER COLLECTION SYSTEM
PLAN AND PROFILE – FM
9TH STREET
STA 49+00 TO 59+00

PROJECT NO.42502-83120
FILE NAME: D-PP-425
SHEET NO.
D-PP-425

L:\Los Osos-42502\83120\01-Sheets\02Civil\AreaD 400\ D-PP-425 02/14/12 09:37 uchimurark XREFS: N-FM-ALIGNMENT, N-FM-PROFILE-CDA AREAS, n-util-ss-D, x-util-strm-D, x-util-all, LosOsos-bdr, x-feat-addr-D, x-feat-aerl-D, x-feat-aerl-sou-D, x-feat-row-D, x-feat-topo-D, N-UTIL-SS, CA-MDM, AREA-C-MIDTOWN-PS, loc_mdl

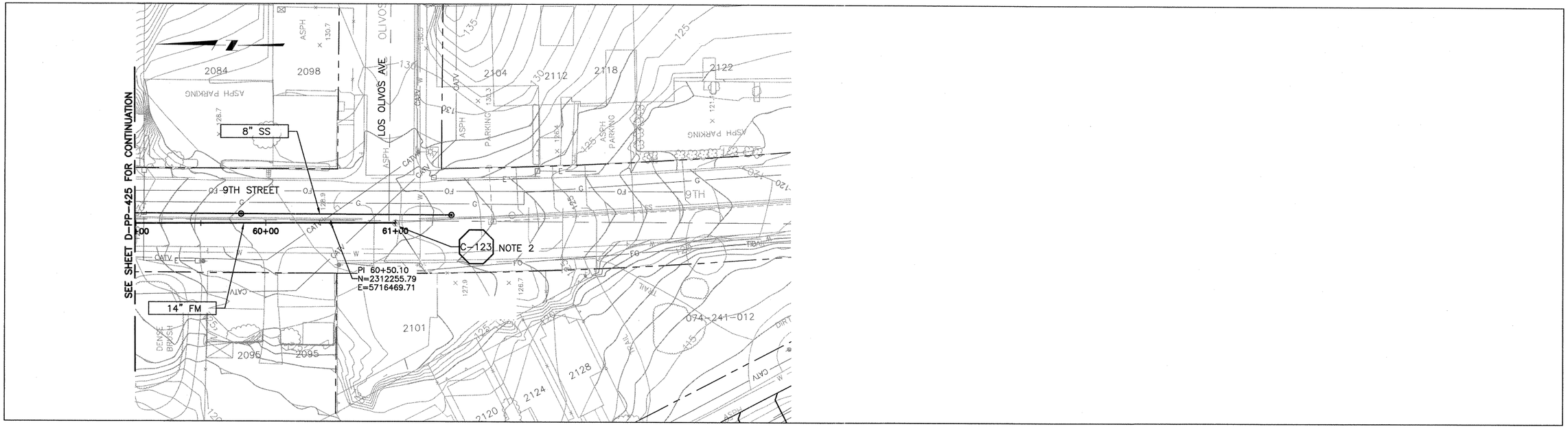


PLAN ON 9TH STREET

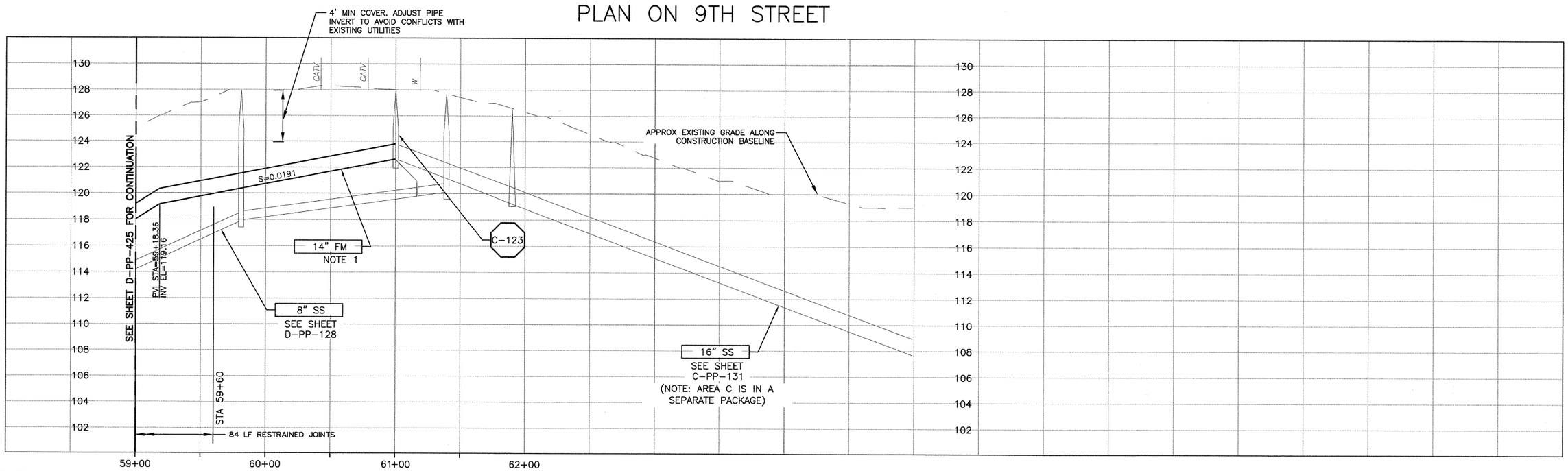


NOTES:

1. NOMINAL FORCEMAIN PIPE SIZE IS FOR PVC MATERIAL. IF HDPE IS UTILIZED, NOMINAL PIPE SIZE SHALL BE 16".
2. MH AND DOWNSTREAM GRAVITY SEWER ARE TO BE INSTALLED BY OTHERS.

PROFILE ON 9TH STREET

SCALE:
HORZ: 1"=40'
VERT: 1"=4'

| REV. NO. | DATE | DRWN | CHKD | REMARKS |
|---|---|---|---|---|

DESIGNED BY: APS
DRAWN BY: RKU
CHECKED BY: MDM
DATE: MARCH 2012

CDM Smith
2295 Gateway Oaks Drive, Suite 240
Sacramento, CA 95833
Tel: (916) 567-9900

0 1/2 1
IF THIS BAR DOES NOT MEASURE 1" THEN ADJUST SCALE ACCORDINGLY

REGISTERED PROFESSIONAL ENGINEER MICHAEL D. MIDDLETON C 061533 Exp. 6/30/13 CIVIL STATE OF CALIFORNIA

DIGALERT
DIAL TOLL FREE 1-800-642-2444 AT LEAST TWO DAYS BEFORE YOU DIG
UNDERGROUND SERVICE ALERT OF NORTHERN CALIFORNIA

LOS OSOS WASTEWATER COLLECTION SYSTEM
PLAN AND PROFILE – FM
9TH STREET
STA 59+00 TO 61+00

PROJECT NO.42502-83120
FILE NAME: D-PP-426
SHEET NO.
D-PP-426

L:\Los Osos-42502\83120\01-Sheets\02Civ\AreaD 400\ D-PP-426 02/08/12 13:29 uchimurark XREFS: N-FM-ALIGNMENT, N-FM-PROFILE-CDA AREAS, n-util-ss-D, x-util-strm-D, x-util-ell, LosOsos-bdr, n-feat-cnbl-REV, x-feat-addr-D, x-feat-aerl-D, x-feat-aerl-sou-D, x-feat-row-D, area-d-sheets, N-UTIL-SS, CA-MDM, AREA-C-MIDTOWN-PS, loc_mdl

## A. GENERAL NOTES

1. ALL STRUCTURAL DRAWINGS SHALL BE USED IN CONJUNCTION WITH THE CIVIL, MECHANICAL, ARCHITECTURAL, ELECTRICAL, INSTRUMENTATION AND SHOP DRAWINGS AND THE PROJECT SPECIFICATIONS.

2. ALL CONSTRUCTION SHALL CONFORM TO THE 2010 EDITION OF THE CALIFORNIA BUILDING CODE (CBC).

3. SEE ALL OTHER PROJECT DOCUMENTS FOR REGLETS, PIPE SLEEVES, CONDUITS OR OTHER ITEMS TO BE EMBEDDED OR PASSED THROUGH CONCRETE STRUCTURES.

4. PENETRATIONS THROUGH WALLS OR SLABS MAY NOT BE SHOWN ON STRUCTURAL DRAWINGS – REFER TO ASSOCIATED DOCUMENTS FOR LOCATIONS.

5. THE MINIMUM CLEAR DISTANCE BETWEEN PIPE OR CONDUIT PENETRATIONS SHALL BE 3 TIMES THE DIAMETER OF THE PENETRATION OR 8", WHICHEVER IS SMALLER. LOCATE CONDUIT IN MIDDLE THIRD OF SLABS.

6. NO STRUCTURAL MEMBERS SHALL BE CUT FOR PIPES, DUCTS, ETC., UNLESS SPECIFICALLY DETAILED OR APPROVED IN WRITING BY THE ENGINEER.

7. WRITTEN DIMENSIONS SHALL TAKE PRECEDENCE OVER SCALED SIZES.

8. USE PERTINENT STANDARD DETAILS SHOWN, EVEN THOUGH THEY MAY NOT BE CALLED OUT AT LOCATIONS WHERE THEY APPLY.

9. UNLESS MODIFIED BY THIS NOTE, SPECIAL INSPECTION BY ICC CERTIFIED INSPECTORS SHALL BE CONDUCTED IN ACCORDANCE WITH THE REQUIREMENTS SET FORTH IN SECTION 1701 OF THE CALIFORNIA BUILDING CODE, (CBC). THE FOLLOWING ITEMS, AS A MINIMUM, SHALL RECEIVE SPECIAL INSPECTION:

a. REINFORCING STEEL: REINFORCING STEEL SHALL BE INSPECTED PRIOR TO CLOSING THE FORMS OR DELIVERY OF CONCRETE TO JOB SITE.

b. WATERSTOP: THE INSPECTOR SHALL INSPECT ALL WATERSTOP INSTALLATIONS PRIOR TO CONCRETE PLACEMENT.

c. BOLTS INSTALLED IN CONCRETE: BOLTS SHALL BE INSPECTED PRIOR TO AND DURING CONCRETE PLACEMENT.

d. CONCRETE: THE INSPECTOR SHALL SUPERVISE THE PREPARATION OF COMPRESSION TEST SPECIMENS AND THE PLACEMENT OF REINFORCED CONCRETE.

e. ADHESIVE ANCHORS OR DOWELS INSTALLED IN CONCRETE: AT A MINIMUM, THE INSPECTOR SHALL PERIODICALLY VERIFY ANCHOR TYPE, ANCHOR DIMENSIONS, CONCRETE TYPE, CONCRETE COMPRESSIVE STRENGTH, HOLE DIMENSIONS, HOLE CLEANING PROCEDURES, ANCHOR SPACING, EDGE DISTANCES, CONCRETE THICKNESS ANCHOR EMBEDMENT, TIGHTENING TORQUE, AND ADHESIVE EXPIRATION DATE; THE INSPECTOR SHALL VERIFY ANCHOR INSTALLATION HAS BEEN PERFORMED IN COMPLIANCE WITH THE MANUFACTURER'S PUBLISHED INSTRUCTIONS AND THE APPROPRIATE ICC EVALUATION SERVICE REPORT.

f. EXPANSION ANCHORS INSTALLED IN CONCRETE: THE INSPECTOR SHALL PERIODICALLY VERIFY ANCHOR TYPE, ANCHOR DIMENSIONS, CONCRETE TYPE, CONCRETE COMPRESSIVE STRENGTH, HOLE DIMENSIONS, ANCHOR SPACING, EDGE DISTANCES, CONCRETE MEMBER THICKNESS, ANCHOR EMBEDMENT, AND TIGHTENING TORQUE. THE INSPECTOR SHALL VERIFY ANCHOR INSTALLATION HAS BEEN PERFORMED IN COMPLIANCE WITH THE MANUFACTURER'S PUBLISHED INSTRUCTIONS AND THE APPROPRIATE ICC EVALUATION SERVICE REPORT.

g. WELDING: CONTINUOUS VISUAL INSPECTION SHALL BE PROVIDED FOR ALL STRUCTURAL WELDING DONE IN THE FIELD.

10. THE CONTRACTOR SHALL BE RESPONSIBLE FOR SAFELY SUPPORTING THE STRUCTURE DURING CONSTRUCTION. STRUCTURES HAVE BEEN DESIGNED FOR OPERATIONAL LOADS ON THE COMPLETED STRUCTURES. DURING CONSTRUCTION, STRUCTURES SHALL BE SUPPORTED BY BRACING OR SHORING WHEREVER EXCESSIVE CONSTRUCTION LOADS MAY OCCUR.

## B. DESIGN LOADS

1. GRAVITY: PUMP STATION AND VAULT ROOF LIVE LOAD HS–20

2. LATERAL: LATERAL LOADS SHALL COMPLY WITH THE REQUIREMENTS OF CHAPTER 16 OF THE 2010 CBC, UNLESS OTHERWISE NOTED. THE FOLLOWING DESIGN PARAMETERS SHALL BE USED.

WIND (2010 CBC): 85 MPH, EXPOSURE D, Iw = 1.15 (UNO)

## B. DESIGN LOADS CONT

SEISMIC (2010 CBC): SEE TABLE BELOW

| FACILITIES | $S_{DS}$ * | $S_{D1}$ * |
|---|---|---|
| MOUNTAIN VIEW | 0.960 | 0.868 |
| POCKET PUMP STATIONS | 0.984 | 0.894 |

* VALUE IS BASED ON THE HIGHER OF SITE CLASS D OR F (SITE CLASS F IS EQUIVALENT TO SITE CLASS E ASSUMING NO SITE MITIGATION IS PERFORMED TO ADDRESS LIQUEFACTION)

IMPORTANCE FACTOR: $I = 1.5$, $I_p = 1.5$

## C. GEOTECHNICAL INFORMATION

1. ALLOWABLE BEARING PRESSURE SHALL BE 2000 PSF WITH A 50% ALLOWABLE INCREASE FOR LOAD COMBINATIONS INCLUDING SEISMIC OR WIND LOADS.

2. THE COEFFICIENT OF FRICTION SHALL BE 0.4.

3. ADDITIONAL GEOTECHNICAL DESIGN PARAMETERS ARE IN GEOTECHNICAL REPORT TITLED "GEOTECHNICAL REPORT LOS OSOS WASTEWATER PROJECT LOS OSOS COMMUNITY SERVICES DISTRICT SAN LUIS OBISPO COUNTY, CALIFORNIA" PREPARED BY FUGRO WEST, INC. DATED MARCH 9, 2004 AND "ADDENDUM TO GEOTECHNICAL REPORT FOR LOS OSOS WASTEWATER PROJECT" PREPARED BY FUGRO CONSULTANTS, INC. DATED OCTOBER 24, 2011.

## D. CAST–IN–PLACE CONCRETE

1. REINFORCED CONCRETE SHALL CONFORM TO ACI 318–08 AND 350–06.

2. MINIMUM CONCRETE COMPRESSIVE STRENGTH AT 28 DAYS, UNLESS OTHERWISE NOTED ON THE DRAWINGS:

STRUCTURAL CONCRETE (CLASS E): f'c = 5000 psi

SEAL SLAB (CLASS D): f'c = 4000 psi

SIDEWALKS, PAVEMENT, CONCRETE FILL, ENCASEMENT (CLASS B): f'c = 3000 psi

3. REINFORCING STEEL SHALL CONFORM TO THE LATEST EDITION OF ASTM SPECIFICATION A615 GRADE 60 AS SPECIFIED IN SPECIFICATION SECTION 03200.

4. REINFORCING STEEL FABRICATION SHALL BE IN ACCORDANCE WITH THE LATEST EDITION OF CRSI MANUAL OF STANDARD PRACTICE.

5. REINFORCING SHALL HAVE THE FOLLOWING CLEAR CONCRETE COVER, UNLESS OTHERWISE NOTED ON THE DRAWINGS.

| CONDITION | COVER |
|---|---|
| UNFORMED SURFACES IN CONTACT WITH EARTH | 3" |
| FORMED SURFACES EXPOSED TO EARTH, WATER, & WEATHER | 2" |
| BOTTOM SURFACES FOR SLAB OVER WATER | 2" |
| CONCRETE SURFACES FOR DRY CONDITIONS: | |
| WALLS AND SLAB | 1 1/2" |
| BEAMS: | |
| PRIMARY REINFORCEMENT | 2" |
| STIRRUPS AND TIES | 1 1/2" |

6. SPLICED BARS SHALL HAVE A MINIMUM LAP AS SPECIFIED IN LATEST EDITION OF THE ACI 315 DETAILING MANUAL AND ACI 318 CHAPTER 21 UNLESS OTHERWISE NOTED IN CONTRACT DOCUMENTS. ALL SPLICES SHALL BE CLASS B TENSION SPLICES AND BE IN ACCORDANCE WITH THE STANDARD DETAILS, UNO.

7. CONSTRUCTION JOINTS SHALL NOT BE PLACED AT LOCATIONS OTHER THAN THOSE SHOWN ON THE DRAWINGS WITHOUT THE PRIOR APPROVAL OF THE ENGINEER.

8. ALL EXPOSED CORNERS OF CONCRETE SHALL HAVE 3/4" CHAMFER, UNLESS NOTED OTHERWISE.

9. WRITTEN SPACING AND LOCATION OF REINFORCING SHALL TAKE PRECEDENCE OVER DEPICTED SPACING AND LOCATION.

## E. STRUCTURAL STEEL

1. STRUCTURAL STEEL WIDE FLANGE SHAPES SHALL CONFORM TO ASTM A992.

2. OTHER STRUCTURAL STEEL SHAPES, PLATES AND BARS SHALL CONFORM TO ASTM A36.

3. HOLLOW STRUCTURAL SECTIONS SHALL CONFORM TO ASTM A500 GRADE B.

4. STRUCTURAL STEEL SHALL BE FABRICATED, ERECTED, AND CONNECTED IN COMPLIANCE WITH THE LATEST AISC SPECIFICATION FOR STRUCTURAL BUILDINGS.

5. SHOP PAINTING AND FIELD PAINTING, IF REQUIRED, SHALL BE DONE IN ACCORDANCE WITH THE SPECIFICATIONS.

6. SEE SPECIFICATION SECTION 05500 FOR ADDITIONAL REQUIREMENTS.

## F. ANCHORS AND ADHESIVE DOWELS FOR CONCRETE

1. CAST–IN ANCHORS SHALL BE HEADED BOLTS CONFORMING TO ASTM F1554 AND GALVANIZED IN ACCORDANCE WITH ASTM A153, UNO.

2. POST–INSTALLED ANCHORS AND ADHESIVE DOWELS SHALL BE INSTALLED IN ACCORDANCE WITH THE MANUFACTURER'S RECOMMENDATIONS AND THE APPROPRIATE ICC EVALUATION SERVICE REPORTS. ONLY ANCHORS OR ADHESIVES WITH CURRENT ICC EVALUATION SERVICE REPORTS AVAILABLE FOR DOWNLOAD ON THE ICC WEBSITE SHALL BE USED. SEE SPEC SECTION 05500 FOR ADDITIONAL INFORMATION.

3. THE CONTRACTOR SHALL LOCATE EXISTING CONCRETE REINFORCEMENT USING NON–DESTRUCTIVE METHODS PRIOR TO DRILLING HOLES FOR POST–INSTALLED ANCHORS OR DOWELS. ADJUST SPACING OF ANCHORS TO MISS EXISTING REINFORCING. THE TOTAL NUMBER OF ANCHORS PROVIDED SHALL BE EQUAL TO WHAT IS SHOWN ON THE DRAWINGS OR EQUIPMENT ANCHORAGE SHOP DRAWINGS.

4. POST–INSTALLED ANCHORS SHALL NOT BE USED FOR VIBRATORY LOADS, UNO.

## G. CONCRETE JOINTS

1. UNO, WATERSTOPS SHALL BE PROVIDED IN JOINTS WHERE SHOWN ON THE DRAWINGS AND WHERE INDICATED BY THE FOLLOWING:

a. IN ALL JOINTS IN WALLS AND SLABS OF LIQUID CONTAINMENT STRUCTURES TO PREVENT EXFILTRATION OF LIQUID INTO SOIL OR DRY AREAS OF THE STRUCTURE.

b. IN ALL BELOW–GRADE JOINTS IN WALLS AND SLABS TO PREVENT INFILTRATION OF GROUNDWATER INTO STRUCTURE.

2. PROVIDE SEALANT IN JOINTS AS SHOWN ON THE DRAWINGS.

3. MATERIAL FOR WATERSTOPS AND JOINT SEALANTS SHALL BE AS NOTED ON THE DRAWINGS AND IN ACCORDANCE WITH THE SPECIFICATIONS.

4. INTENTIONALLY ROUGHEN THE SURFACES OF CONSTRUCTION JOINTS AND WHERE NEW CONCRETE CONTACTS EXISTING CONCRETE TO A CONCRETE SURFACE PROFILE (CSP) 9 PER ICRI GUIDELINE 03732 WITH ¼" MINIMUM AMPLITUDE. THIS ROUGHENED SURFACE MAY BE ACCOMPLISHED BY RAKING THE PLASTIC CONCRETE OR BY BUSHHAMMERING OR CHISELING HARDENED CONCRETE SURFACES. THOROUGHLY CLEAN JOINT SURFACES OF LOOSE OR WEAKENED MATERIALS BY WATERBLASTING OR SANDBLASTING. SATURATE SURFACE WITH WATER 12 HOURS BEFORE AND AGAIN IMMEDIATELY PRIOR TO CONCRETE PLACEMENT.

©2012 CDM SMITH ALL RIGHTS RESERVED.
REUSE OF DOCUMENTS – THESE DOCUMENTS AND DESIGNS PROVIDED BY PROFESSIONAL SERVICE, INCORPORATED HEREIN, ARE THE PROPERTY OF CDM SMITH AND ARE NOT TO BE USED, IN WHOLE OR PART, FOR ANY OTHER PROJECT WITHOUT THE WRITTEN AUTHORIZATION OF CDM SMITH.
\\Wfcsvr01\cad\ACAD2008\los osos\01-sheets\D\D-STR\ D-S-001 03/07/12 10:03 nguyentv XREFS: LosOsos-bdr, CA-CNO

| REV. NO. | DATE | DRWN | CHKD | REMARKS |
|---|---|---|---|---|

DESIGNED BY: CNO
DRAWN BY: TVN
CHECKED BY: LGS
DATE: MARCH 2012

CDM Smith
2295 Gateway Oaks Drive, Suite 240
Sacramento, CA 95833
Tel: (916) 567-9900

0 1/2 1
IF THIS BAR DOES NOT MEASURE 1" THEN ADJUST SCALE ACCORDINGLY

REGISTERED PROFESSIONAL ENGINEER CHARLES M. GRIFFITH No. C 77836 Exp. 6/30/13 CIVIL STATE OF CALIFORNIA 3/13/2012

DIGALERT
DIAL TOLL FREE 1-800-642-2444
AT LEAST TWO DAYS BEFORE YOU DIG
UNDERGROUND SERVICE ALERT OF NORTHERN CALIFORNIA

LOS OSOS WASTEWATER COLLECTION SYSTEM

# STRUCTURAL NOTES 1

PROJECT NO.42502–83120
FILE NAME: D–S–001
SHEET NO.
D–S–001

## H. PRECAST CONCRETE

1. THE SUPPLIER OF THE PRECAST CONCRETE UNITS SHALL DESIGN AND PROVIDE DRAWINGS AND CALCULATIONS STAMPED AND SIGNED BY A PROFESSIONAL CIVIL OR STRUCTURAL ENGINEER REGISTERED IN THE STATE OF CALIFORNIA. THE DESIGN SHALL BE PER THE SPECIFICATIONS AND AS SHOWN IN THE DRAWINGS.

2. THE SUPPLIER SHALL COORDINATE WITH THE CONTRACTOR FOR THE SIZE AND LOCATION OF ALL ROOF AND WALL PENETRATIONS PRIOR TO FABRICATION.

## I. SUBMERSIBLE PUMP STATION

1. REINFORCED CONCRETE PIPE AND DESIGN FOR THE CAISSONS CONSTRUCTION PUMP STATIONS SHALL BE IN ACCORDANCE WITH SPECIFICATION SECTION 02612.

2. PVC LINING FOR THE PUMP STATION WALLS SHALL BE IN ACCORDANCE WITH SPECIFICATION SECTION 02765.

3. CAISSON CONSTRUCTION SHALL BE IN ACCORDANCE WITH SPECIFICATION SECTION 02355.

## J. DEFERRED SUBMITTALS

1. THE FOLLOWING PORTIONS OF THE PROJECT ARE DEFERRED SUBMITTAL ITEMS & HAVE NOT BEEN DESIGNED BY THE ENGINEER OF RECORD.

a) SUPPORT AND ANCHORAGE OF EQUIPMENT
b) PRECAST MANHOLES
c) PRECAST VAULTS
d) PRECAST REINFORCED CONCRETE PIPE CAISSONS
e) HS-20 ACCESS HATCHES

2. DEFERRED SUBMITTAL ITEMS SHALL NOT BE INSTALLED UNTIL THE ENGINEER OF RECORD HAS REVIEWED THE SUBMITTAL DOCUMENTS AND INDICATED THAT THEY HAVE BEEN REVIEWED AND THAT THEY HAVE BEEN FOUND TO BE IN GENERAL CONFORMANCE WITH THE DESIGN OF THE STRUCTURE.

## K. ABBREVIATION NOTES

1. ABBREVIATIONS AND DESIGNATIONS FOR STEEL MEMBERS MAY BE FOUND IN THE CURRENT MANUAL OF STEEL CONSTRUCTION BY AISC.

2. WELDING SYMBOLS AND ABBREVIATIONS MAY BE FOUND IN AWS D1.1.

3. ABBREVIATIONS LISTED ARE FOR USE WITH STRUCTURAL DRAWINGS ONLY. SOME ABBREVIATIONS LISTED MAY NOT BE USED ON THE PLANS.

## STRUCTURAL ABBREVIATIONS

| | |
|---|---|
| Ø | DIAMETER |
| AB | ANCHOR BOLT |
| ADDL | ADDITIONAL |
| AL | ALUMINUM |
| ALT | ALTERNATE(ING) |
| APPROX | APPROXIMATE(LY) |
| ARND | AROUND |
| BGS | BELOW GROUND SURFACE |
| BLDG | BUILDING |
| BLK | BLOCK(ING) |
| BO | BOTTOM OF |
| BOT | BOTTOM |
| BTWN | BETWEEN |
| CHKD | CHECKERED |
| CIRC | CIRCUMFERENTIAL |
| CJ | CONSTRUCTION JOINT |
| CJP | COMPLETE JOINT PENETRATION |
| CL, ℄ | CENTERLINE |
| CTJ | CONTROL JOINT |
| CLR | CLEAR |
| COL | COLUMN |
| CONC | CONCRETE |
| CONN | CONNECTION |
| CONST | CONSTRUCTION |
| CONT | CONTINUOUS |
| CTR | CENTER (ED) |
| D | DEEP, DEPTH |
| DEMO | DEMOLITION |
| DET | DETAIL |
| DIA | DIAMETER |
| DIAG | DIAGONAL |
| DIM | DIMENSION |
| DL | DEAD LOAD |
| DN | DOWN |
| DO. | DITTO |
| DR | DRAIN |
| DWG(S) | DRAWING(S) |
| DWL(S) | DOWEL(S) |
| EA | EACH |
| EB | EXPANSION BOLT |
| ECC | ECCENTRIC |
| EF | EACH FACE |
| EL | ELEVATION |
| EMBED | EMBEDMENT |
| EQ | EQUAL (LY) |
| EQPT | EQUIPMENT |
| EQUIV | EQUIVALENT |
| ES | EACH SIDE |
| ETC | ETCETERA |
| EW | EACH WAY |
| EXP | EXPANSION |
| EXST, (E) | EXISTING |
| EXT | EXTERIOR |
| f'c | CONCRETE COMPRESSIVE STRENGTH |
| FD | FLOOR DRAIN |
| FDN | FOUNDATION |
| FIG | FIGURE |
| FIN | FINISH (ED) |
| FL | FLOOR |
| FLEX | FLEXIBLE |
| FTG | FOOTING |
| GA | GAGE |
| GALV | GALVANIZED |
| GALVS | GALVANIZED STEEL |
| GR | GUARD RAIL |
| GRTG | GRATING |
| HDR | HEADER |
| H | HEIGHT |
| HOR | HORIZONTAL |
| HP | HIGH POINT |
| HR | HANDRAIL |
| HSB | HIGH STRENGTH BOLTS |
| ICC | INTERNATIONAL CODE COUNCIL |
| ID | INSIDE DIAMETER |
| I.F. | INSIDE FACE |
| INT | INTERIOR |
| INV | INVERT |
| JT | JOINT |
| JT FLR | JOINT FILLER |
| LG | LONG |
| LLH | LONG LEG HORIZONTAL |
| LLV | LONG LEG VERTICAL |
| LNTL | LINTEL |
| LONG. | LONGITUDINAL |
| LP | LOW POINT |
| LT | LEFT |
| MATL | MATERIAL |
| MAX | MAXIMUM |
| MFR | MANUFACTURER |
| MIN | MINIMUM |
| MOL | MAXIMUM OPERATING LEVEL |
| MTL | METAL |
| (N) | NEW |
| NOM | NOMINAL |
| NSG | NON-SHRINK GROUT |
| NTS | NOT TO SCALE |
| O/E | OR EQUAL |
| OC | ON CENTER |
| OD | OUTSIDE DIAMETER |
| O.F | OUTSIDE FACE |
| OPNG(S) | OPENING(S) |
| OPP | OPPOSITE |
| OPP HD | OPPOSITE HAND |
| OPT | OPTION (AL) |
| PJF | PREMOLDED JOINT FILLER |
| PL | PLATE |
| PREFAB | PRE-FABRICATED |
| PT | POINT |
| R | RISER |
| RAD | RADIUS |
| RD | ROOF DRAIN |
| REF | REFERENCE / REFER |
| REINF | REINFORCE (D, ING) |
| REQD | REQUIRED |
| REV | REVISION |
| RO | ROUGH OPENING |
| RT | RIGHT |
| SECT | SECTION |
| SHT | SHEET |
| SIM | SIMILAR |
| SL | SLOPE |
| SP | SPACE (S, ED) |
| SPEC | SPECIFICATION, SPECIFIED |
| SQ | SQUARE |
| SST | STAINLESS STEEL |
| SSW | SIDE SEAM WELD |
| STD | STANDARD |
| STL | STEEL |
| STRUC | STRUCTURE (S, URAL) |
| SYM | SYMMETRICAL |
| T | TREAD (S) |
| T&B | TOP AND BOTTOM |
| TD | TRENCH DRAIN |
| THK | THICK (NESS) |
| T.O. | TOP OF |
| TOC | TOP OF CONCRETE |
| TOS | TOP OF STEEL |
| T.O.W. | TOP OF WALL |
| TRNSV | TRANSVERSE |
| TSW | TOP SEAM WELD |
| TYP | TYPICAL |
| UNO | UNLESS NOTED OTHERWISE |
| VB | VAPOR BARRIER |
| VERT | VERTICAL |
| W | WIDE |
| W/ | WITH |
| W/O | WITHOUT |
| WD | WIDTH / WOOD |
| WP | WORKING POINT |
| WPG | WATERPROOFING |
| WS | WATERSTOP |
| WT | WEIGHT |
| WWF | WELDED |
| WIRE | FABRIC |

©2012 CDM SMITH ALL RIGHTS RESERVED.
REUSE OF DOCUMENTS: THESE DOCUMENTS AND DESIGNS PROVIDED BY PROFESSIONAL SERVICE, INCORPORATED HEREIN, ARE THE PROPERTY OF CDM SMITH AND ARE NOT TO BE USED, IN WHOLE OR PART, FOR ANY OTHER PROJECT WITHOUT THE WRITTEN AUTHORIZATION OF CDM SMITH.
\\Wcsvr01\cad\KCAD2008\los osos\01-sheets\D\D-STR\ D-S-002 03/07/12 10:09 nguyentv XREFS: LosOsos-bar, CA-CNO

| REV. NO. | DATE | DRWN | CHKD | REMARKS |
|---|---|---|---|---|

DESIGNED BY: CNO
DRAWN BY: TVN
CHECKED BY: LGS
DATE: MARCH 2012

CDM Smith
2295 Gateway Oaks Drive, Suite 240
Sacramento, CA 95833
Tel: (916) 567-9900

0 1/2 1
IF THIS BAR DOES NOT MEASURE 1" THEN ADJUST SCALE ACCORDINGLY

REGISTERED PROFESSIONAL ENGINEER CHARLES N. CHIU No. C 77836 Exp. 6/30/13 CIVIL STATE OF CALIFORNIA 3/13/2012

DIGALERT DIAL TOLL FREE 1-800-642-2444 AT LEAST TWO DAYS BEFORE YOU DIG
UNDERGROUND SERVICE ALERT OF NORTHERN CALIFORNIA

LOS OSOS WASTEWATER COLLECTION SYSTEM

# STRUCTURAL NOTES 2

PROJECT NO.42502-83120
FILE NAME: D-S-002
SHEET NO.
D-S-002

## LEGEND:

CLASS 2 PERMEABLE MATERIAL

STRUCTURAL FILL/ BACKFILL

UNDISTURBED EARTH OR SCARIFIED SOIL

CONCRETE FILL/ CONCRETE

GROUT

COVER PLATE

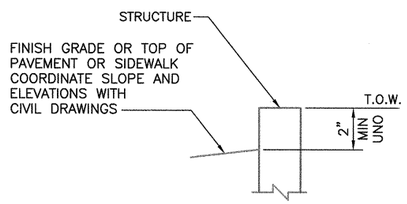


## STRUCTURAL STANDARD DETAIL CALLOUT

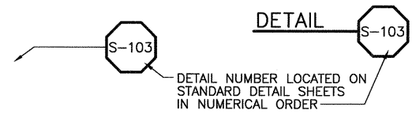


## SECTION CALLOUT

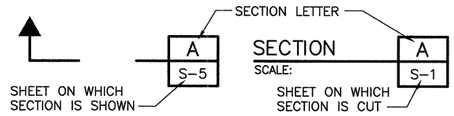


## DETAIL CALLOUT

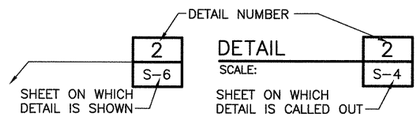


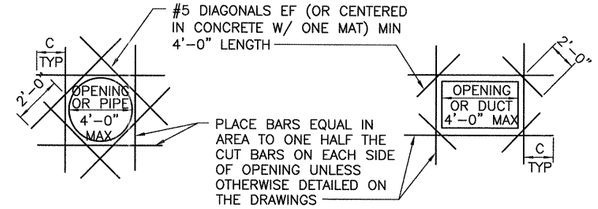


1. C = TENSION DEVELOPMENT LENGTH: PROVIDE STD HOOK IF FULL DEVELOPMENT LENGTH IS NOT POSSIBLE.

2. REINFORCING STEEL IS TO BE CARRIED ACROSS ALL CONSTRUCTION JOINTS.

3. DETAIL IS TYP FOR ALL OPENINGS GREATER THAN 10 INCHES IN CONCRETE WALLS AND SLABS UNLESS OTHERWISE DETAILED ON THE DRAWINGS.

4. EXTRA BARS ARE NOT REQUIRED AT AN OPENING EDGE PARALLEL TO AND WITHIN 6 INCHES OF A WALL OR BEAM, UNO.

**EXTRA REINFORCEMENT AT CONCRETE OPENINGS**

DETAIL S-110
SCALE: NONE –

| | DEVELOPMENT LENGTH ld (INCHES) | | LAP LENGTH (INCHES) | |
|---|---|---|---|---|
| REINF | TOP BAR | OTHER | TOP BAR | OTHER |
| #3 | 20 | 15 | 26 | 20 |
| #4 | 22 | 17 | 28 | 22 |
| #5 | 27 | 21 | 35 | 27 |
| #6 | 32 | 25 | 42 | 32 |
| #7 | 38 | 29 | 49 | 38 |
| #8 | 43 | 33 | 56 | 43 |
| #9 | 48 | 37 | 63 | 48 |

NOTES:

1. TOP BAR IS ANY HORIZ BAR WITH MORE THAN 12" CONCRETE CAST IN ONE LIFT BENEATH IT. HORIZONTAL BARS MAY OCCUR IN WALL OR A SLAB.

2. PROVIDE LAP LENGTHS PER ABOVE TABLE AT ALL SPLICES.

3. SPLICES IN HORIZONTAL BARS SHALL BE STAGGERED.

4. UNLESS OTHERWISE DETAILED ON THE DRAWINGS, SPLICES IN TWO CURTAINS SHALL NOT OCCUR IN THE SAME LOCATION.

5. BASED ON ACI 318-08 CHAP. 12 AND 21.

6. COMPRESSIVE STRENGTH OF CONCRETE, f'c, IS 5,000 psi.

**LAP SPLICE LENGTH IN CONCRETE**

DETAIL S-111
SCALE: NONE –

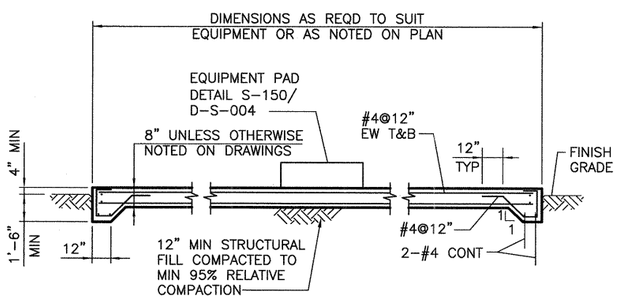


**EXTERIOR EQUIPMENT SLAB**

DETAIL S-114
SCALE: NONE –

| REV. NO. | DATE | DRWN | CHKD | REMARKS |
|---|---|---|---|---|

DESIGNED BY: CNO
DRAWN BY: TVN
CHECKED BY: LGS
DATE: MARCH 2012


CDM Smith
2295 Gateway Oaks Drive, Suite 240
Sacramento, CA 95833
Tel: (916) 567-9900


0 1/2 1
IF THIS BAR DOES NOT MEASURE 1" THEN ADJUST SCALE ACCORDINGLY

REGISTERED PROFESSIONAL ENGINEER No. C 77836 Exp. 6/30/13 3/13/2012 CIVIL STATE OF CALIFORNIA

DIGALERT
DIAL TOLL FREE 1-800-642-2444
AT LEAST TWO DAYS BEFORE YOU DIG
UNDERGROUND SERVICE ALERT OF NORTHERN CALIFORNIA

LOS OSOS WASTEWATER COLLECTION SYSTEM

STANDARD STRUCTURAL DETAILS 1

PROJECT NO. 42502-83120
FILE NAME: D-S-003
SHEET NO.
D-S-003


©2012 CDM SMITH ALL RIGHTS RESERVED.
REUSE OF DOCUMENTS: THESE DOCUMENTS AND DESIGNS PROVIDED BY PROFESSIONAL SERVICE, INCORPORATED HEREIN, ARE THE PROPERTY OF CDM SMITH AND ARE NOT TO BE USED, IN WHOLE OR PART, FOR ANY OTHER PROJECT WITHOUT THE WRITTEN AUTHORIZATION OF CDM SMITH.

\\Wicsvr01\cad\ACAD2008\los osos\01-sheets\D-STR\ D-S-003 03/08/12 12:36 nguyentv XREFS: LosOsos-bdr, CA-CNO

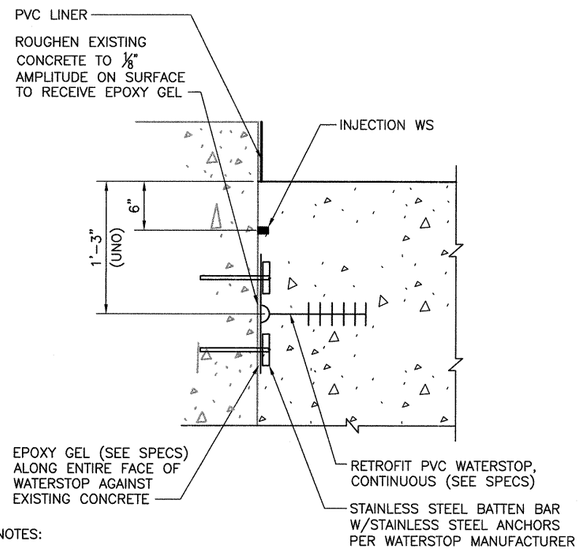


NOTES:

1. REINF NOT SHOWN FOR CLARITY.

**WATERSTOP AT EXISTING SURFACE**

DETAIL S-130
SCALE: NONE

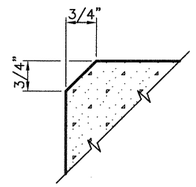


UNO ON DRAWINGS

**CONCRETE CHAMFER**

DETAIL S-140
SCALE: NONE

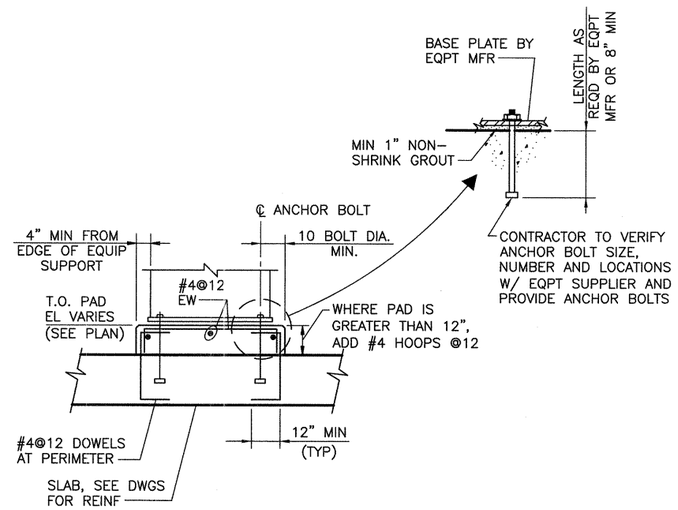


**EQUIPMENT PAD**

DETAIL S-150
SCALE: NONE

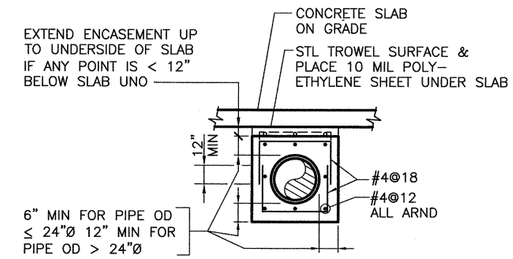


NOTE: CONCRETE ENCASEMENT SHALL EXTEND BEYOND STRUCTURE TO FIRST PIPE JOINT, UNO.

**PIPE ENCASEMENT**

DETAIL S-172
SCALE: NONE

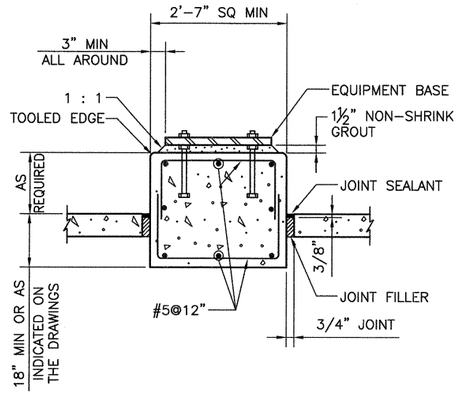


NOTE:

WHERE NO DIMENSION IS INDICATED ON THE DRAWINGS, BASE DEPTH SHALL BE SET SO THAT THE BASE WEIGHS AT LEAST THREE TIMES THE WEIGHT OF THE EQUIPMENT SUPPORTED.

**EQUIPMENT BASE ON GRADE WITH SEPARATING JOINT**

DETAIL S-193
SCALE: NONE

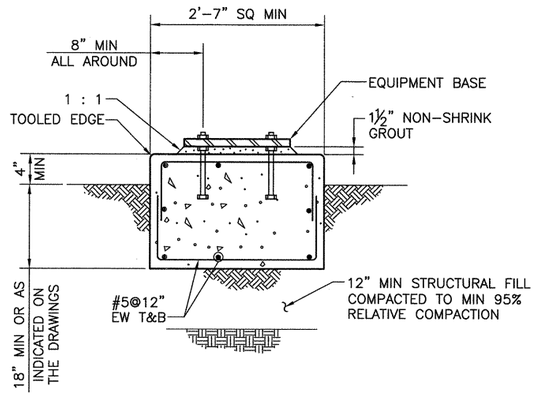


NOTES:

1. SUPPORTED EQUIPMENT SHALL NOT EXCEED 500 LBS OR 5'-0" IN HEIGHT.

2. WHERE NO DIMENSION IS INDICATED ON THE DRAWINGS, BASE DEPTH SHALL BE THE GREATER OF 1'-6" AND A DEPTH SUCH THAT THE BASE WEIGHS AT LEAST THREE TIMES THE WEIGHT OF THE EQUIPMENT SUPPORTED.

**SMALL EQUIPMENT BASE ON GRADE**

DETAIL S-194
SCALE: NONE

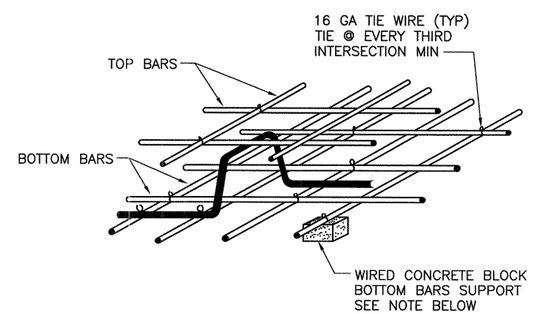


NOTE:

METAL BAR SUPPORTS, IF USED IN SLABS NOT ON GROUND, SHALL NOT MAKE CONTACT WITH FORMS.

**REINFORCEMENT SUPPORT**

DETAIL S-204
SCALE: NONE

| REV. NO. | DATE | DRWN | CHKD | REMARKS |
|---|---|---|---|---|

DESIGNED BY: CNO
DRAWN BY: TVN
CHECKED BY: LGS
DATE: MARCH 2012

CDM Smith
2295 Gateway Oaks Drive, Suite 240
Sacramento, CA 95833
Tel: (916) 567-9900

0 1/2 1
IF THIS BAR DOES NOT MEASURE 1" THEN ADJUST SCALE ACCORDINGLY

REGISTERED PROFESSIONAL ENGINEER LOUIS N. GRIFFITH No. C 77808 Exp. 6/30/12 5/13/2012 CIVIL STATE OF CALIFORNIA

DIGALERT DIAL TOLL FREE 1-800-642-2444 AT LEAST TWO DAYS BEFORE YOU DIG
UNDERGROUND SERVICE ALERT OF NORTHERN CALIFORNIA

LOS OSOS WASTEWATER COLLECTION SYSTEM

STANDARD STRUCTURAL DETAILS 2

PROJECT NO.42502-83120
FILE NAME: D-S-004
SHEET NO.
D-S-004

©2012 CDM SMITH ALL RIGHTS RESERVED.
REUSE OF DOCUMENTS: THESE DOCUMENTS AND DESIGNS PROVIDED BY PROFESSIONAL SERVICE, INCORPORATED HEREIN, ARE THE PROPERTY OF CDM SMITH AND ARE NOT TO BE USED, IN WHOLE OR PART, FOR ANY OTHER PROJECT WITHOUT THE WRITTEN AUTHORIZATION OF CDM SMITH.
\\Wicsvr01\cad\ACAD2008\los osos\01-sheets\D-STR\ D-S-004 03/08/12 12:38 nguyentv XREFS: LosOsos-bdr, CA-CNO

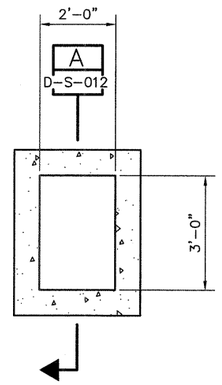


PRECAST CLEANOUT VAULT
FOUNDATION PLAN
SCALE: 1/2"=1'-0"

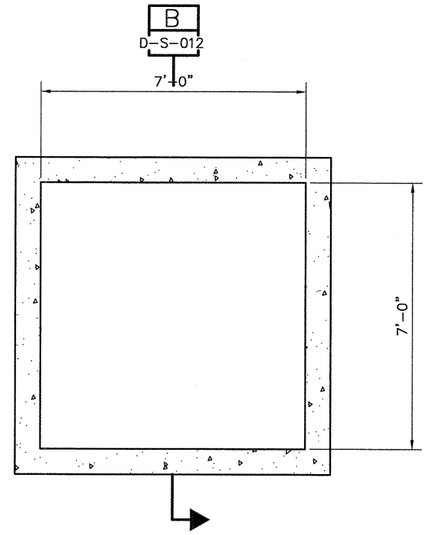


PRECAST VALVE VAULT
FOUNDATION PLAN
SCALE: 1/2"=1'-0"

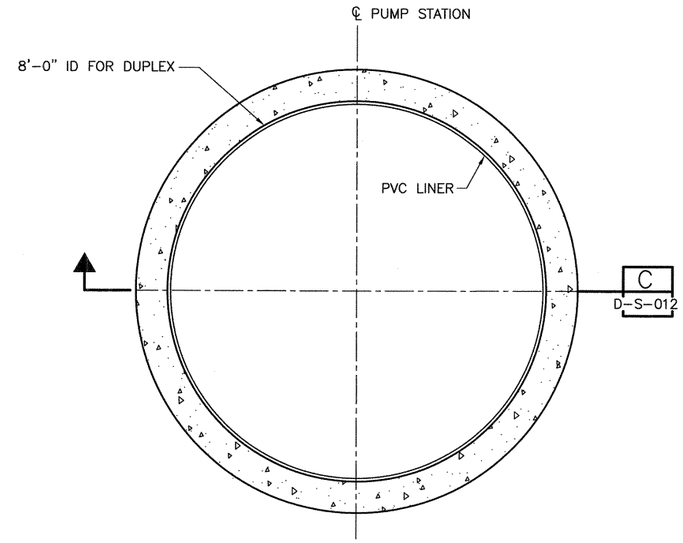


PUMP STATION
FOUNDATION PLAN
SCALE: 1/2"=1'-0"

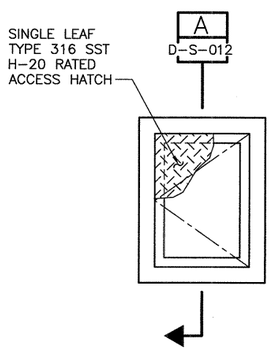


NOTE: COORDINATE VAULT PENETRATION SIZES AND LOCATIONS WITH CIVIL, MECHANICAL AND ELECTRICAL DRAWINGS.

PRECAST CLEANOUT VAULT
TOP PLAN
SCALE: 1/2"=1'-0"

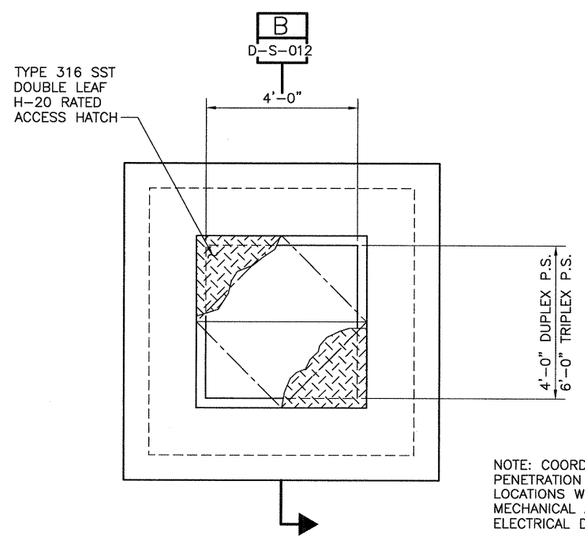


NOTE: COORDINATE VAULT PENETRATION SIZES AND LOCATIONS WITH CIVIL, MECHANICAL AND ELECTRICAL DRAWINGS.

PRECAST VALVE VAULT
TOP PLAN
SCALE: 1/2"=1'-0"

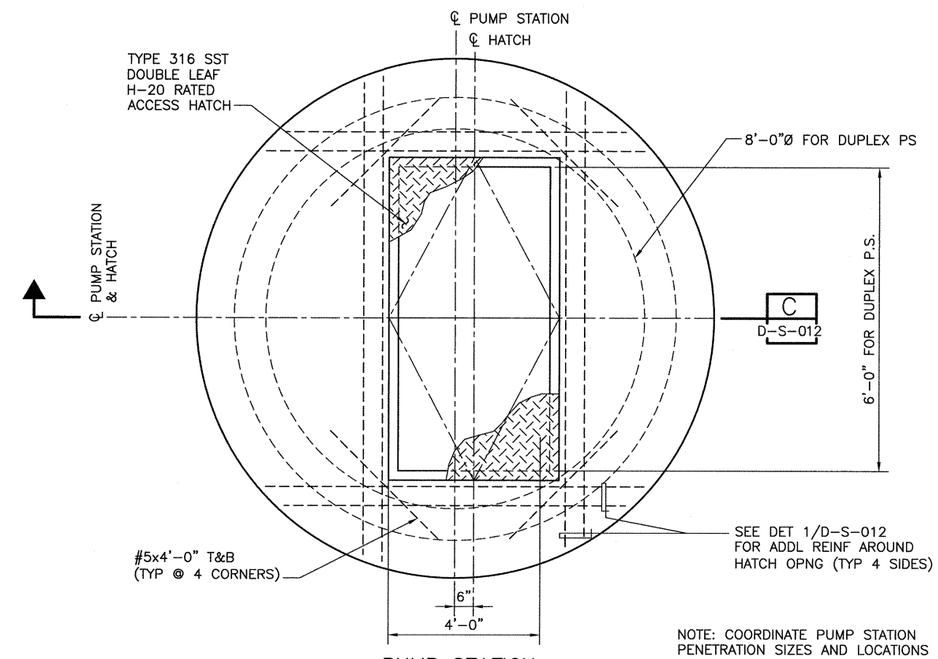


NOTE: COORDINATE PUMP STATION PENETRATION SIZES AND LOCATIONS WITH CIVIL, MECHANICAL AND ELECTRICAL DRAWINGS.

PUMP STATION
TOP PLAN
SCALE: 1/2"=1'-0"

| REV. NO. | DATE | DRWN | CHKD | REMARKS |
|---|---|---|---|---|

DESIGNED BY: CNO
DRAWN BY: TVN
CHECKED BY: LGS
DATE: MARCH 2012

CDM Smith
2295 Gateway Oaks Drive, Suite 240
Sacramento, CA 95833
Tel: (916) 567-9900

0 1/2 1
IF THIS BAR DOES NOT MEASURE 1" THEN ADJUST SCALE ACCORDINGLY

REGISTERED PROFESSIONAL ENGINEER
CARLOS H. ORTIZ
No. C 77836
Exp. 6/30/13
3/13/2012
CIVIL
STATE OF CALIFORNIA

DIGALERT
DIAL TOLL FREE
1-800-642-2444
AT LEAST TWO DAYS BEFORE YOU DIG
UNDERGROUND SERVICE ALERT OF NORTHERN CALIFORNIA

LOS OSOS WASTEWATER COLLECTION SYSTEM
STRUCTURAL
SUBMERSIBLE PUMP STATIONS & VALVE VAULTS – FOUNDATION AND TOP PLANS

PROJECT NO.42502-83120
FILE NAME: D-S-011
SHEET NO.
D-S-011

©2012 CDM SMITH ALL RIGHTS RESERVED.
REUSE OF DOCUMENTS: THESE DOCUMENTS AND DESIGNS PROVIDED BY PROFESSIONAL SERVICE, INCORPORATED HEREIN, ARE THE PROPERTY OF CDM SMITH AND ARE NOT TO BE USED, IN WHOLE OR PART, FOR ANY OTHER PROJECT WITHOUT THE WRITTEN AUTHORIZATION OF CDM SMITH.
\\Wicsvr01\cad\ACAD2008\los osos\01-sheets\D\D-STR\ D-S-011 03/07/12 10:20 nguyentv XREFS: LosOsos-bdr, Submers-PSModels, CA-CNO

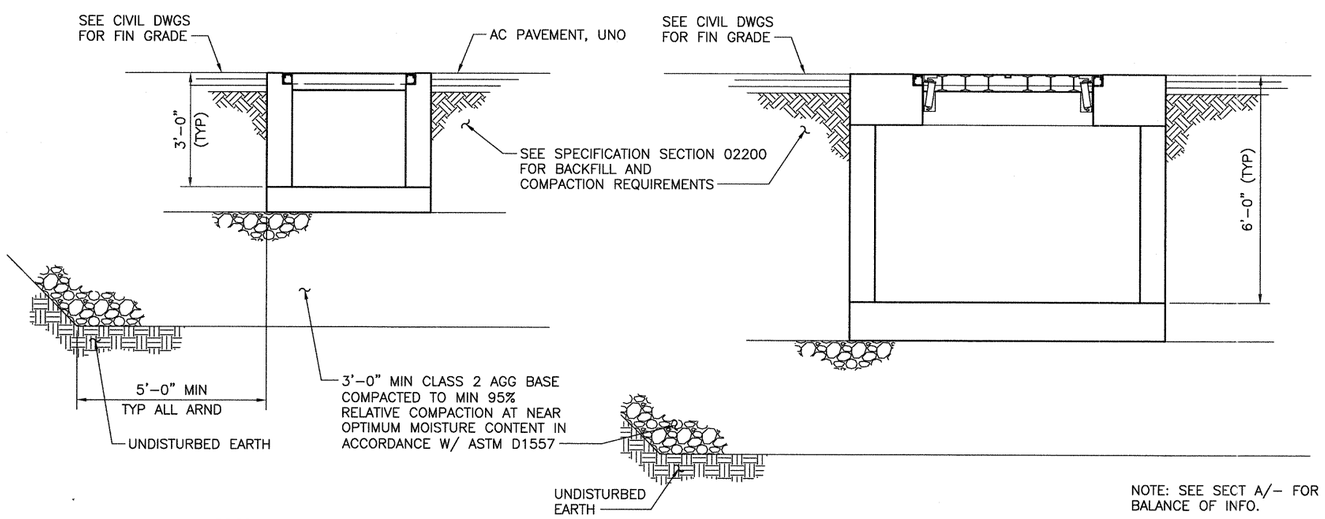


NOTE: SEE SECT A/– FOR BALANCE OF INFO.

PRECAST CLEANOUT VAULT
SECTION A
SCALE: 1/2"=1' D–S–011

PRECAST VALVE VAULT
SECTION B
SCALE: 1/2"=1' D–S–011

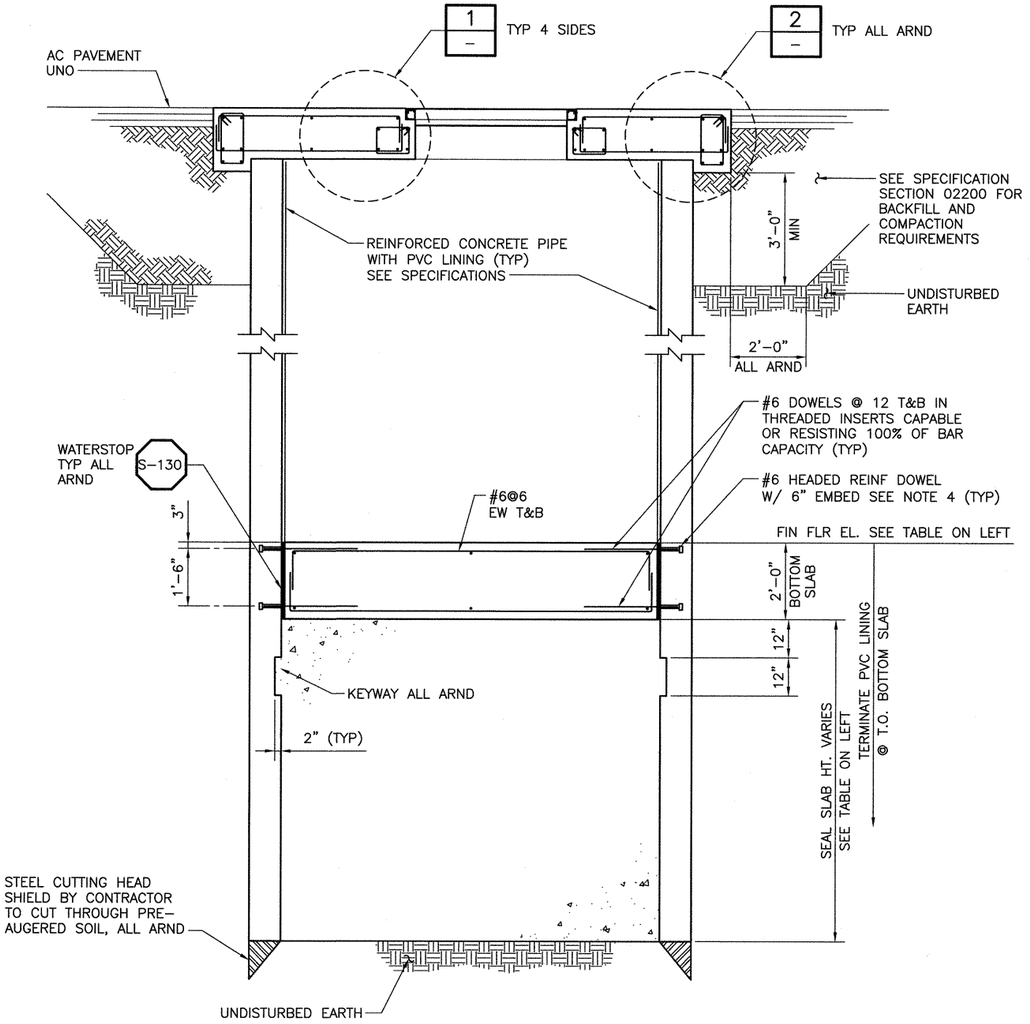


PUMP STATION
SECTION C
SCALE: 1/2"=1' D–S–011

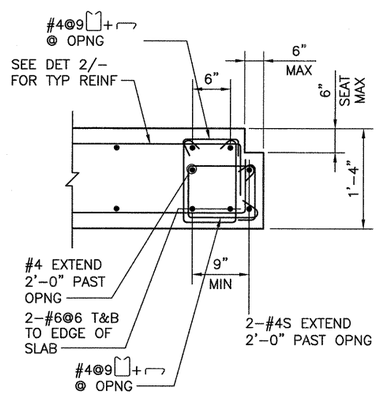


NOTES:

1. ACCESS HATCH NOT SHOWN FOR CLARITY.

DETAIL 1
SCALE: 1"=1' D–S–013,–

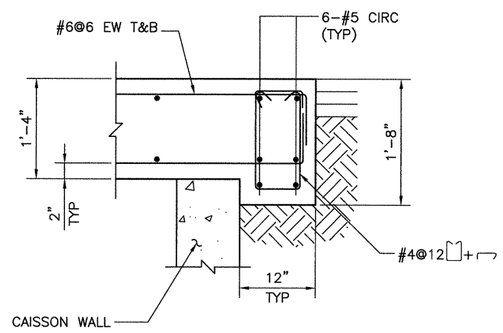


DETAIL 2
SCALE: 1"=1' D–S–013,–

| PUMP | DUPLEX |
|---|---|
| SITE LOCATION | MOUNTAIN VIEW |
| SUBMERSIBLE PS FIN GRADE EL. | 100.20' |
| SUBMERSIBLE PS FIN FLR EL. | 86.70' |
| SUBMERSIBLE PS I.D. | 8'–0" |
| MIN SEAL SLAB DEPTH | 6'–0" |

NOTES:

1. REFER TO SPEC SECTION 02355 FOR PUMP STATION RECOMMENDED CHRONOLOGICAL SEQUENCED OF CONSTRUCTION AND ADD'L INFO.
2. REFER TO THE TABLE HEREIN FOR THE FINISHED GRADE ELEVATIONS AND FINISHED FLOOR ELEVATIONS OF THE WET WELL AT VARIOUS SITES. SEE CIVIL DWGS FOR FIN GR EL OF PRECAST VALVE VAULT AND CLEANOUT VAULT.
3. 8' OR 10' INTERNAL DIA PRECAST CONCRETE SECTIONS USED FOR THE SUBMERSIBLE PUMP STATIONS SHALL BE REINFORCED CONCRETE PIPE PER ASTM C–76, CLASS III. REINFORCEMENT SHALL BE CIRCULAR. JOINTS SHALL BE STEEL FLUSH BELL WITH O–RING GASKET, CONFORMING TO ASTM C–361.
4. SEE SPECIFICATION 03200 FOR ADD'L INFORMATION ON HEADED REINF.

| REV. NO. | DATE | DRWN | CHKD | REMARKS |
|---|---|---|---|---|

DESIGNED BY: CNO
DRAWN BY: TVN
CHECKED BY: LGS
DATE: MARCH 2012

CDM Smith
2295 Gateway Oaks Drive, Suite 240
Sacramento, CA 95833
Tel: (916) 567-9900

0 1/2 1
IF THIS BAR DOES NOT MEASURE 1" THEN ADJUST SCALE ACCORDINGLY

REGISTERED PROFESSIONAL ENGINEER CHARLES N. GRIFFITH No. C 37838 Exp. 6/30/13 CIVIL STATE OF CALIFORNIA 7/13/2012

DIGALERT
DIAL TOLL FREE 1-800-642-2444 AT LEAST TWO DAYS BEFORE YOU DIG
UNDERGROUND SERVICE ALERT OF NORTHERN CALIFORNIA

LOS OSOS WASTEWATER COLLECTION SYSTEM
STRUCTURAL
SUBMERSIBLE PUMP STATIONS & VALVE VAULTS – SECTIONS AND DETAILS

PROJECT NO.42502–83120
FILE NAME: D–S–012
SHEET NO.
D–S–012

©2012 CDM SMITH ALL RIGHTS RESERVED.
REUSE OF DOCUMENTS: THESE DOCUMENTS AND DESIGNS PROVIDED BY PROFESSIONAL SERVICE, INCORPORATED HEREIN, ARE THE PROPERTY OF CDM SMITH AND ARE NOT TO BE USED, IN WHOLE OR PART, FOR ANY OTHER PROJECT WITHOUT THE WRITTEN AUTHORIZATION OF CDM SMITH.
\\Wicsvr01\cad\ACAD2008\los osos\01-sheets\D\D-STR\ D-S-012 03/08/12 12:52 nguyentv XREFS: LosOsos-bdr, Submers-PSModels, CA-CNO

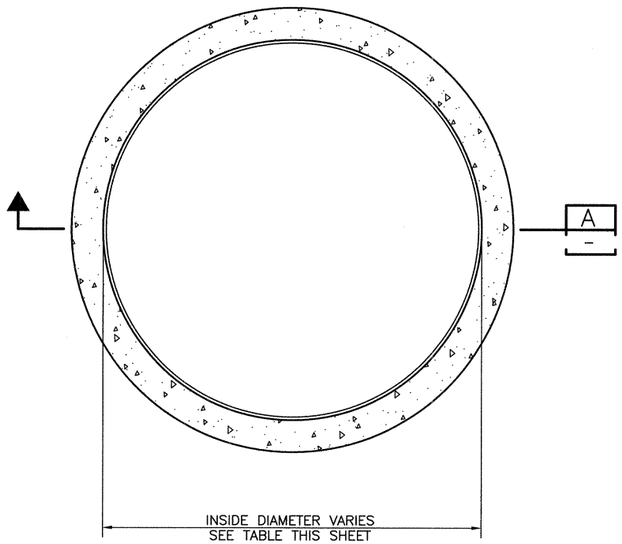


## FOUNDATION PLAN

SCALE: 1/2"=1'-0"

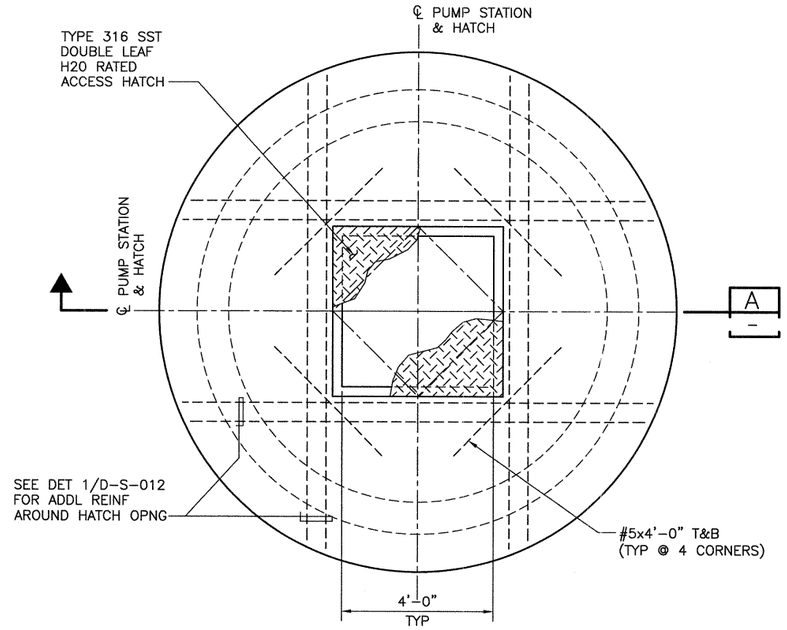


## TOP PLAN

SCALE: 1/2"=1'-0"

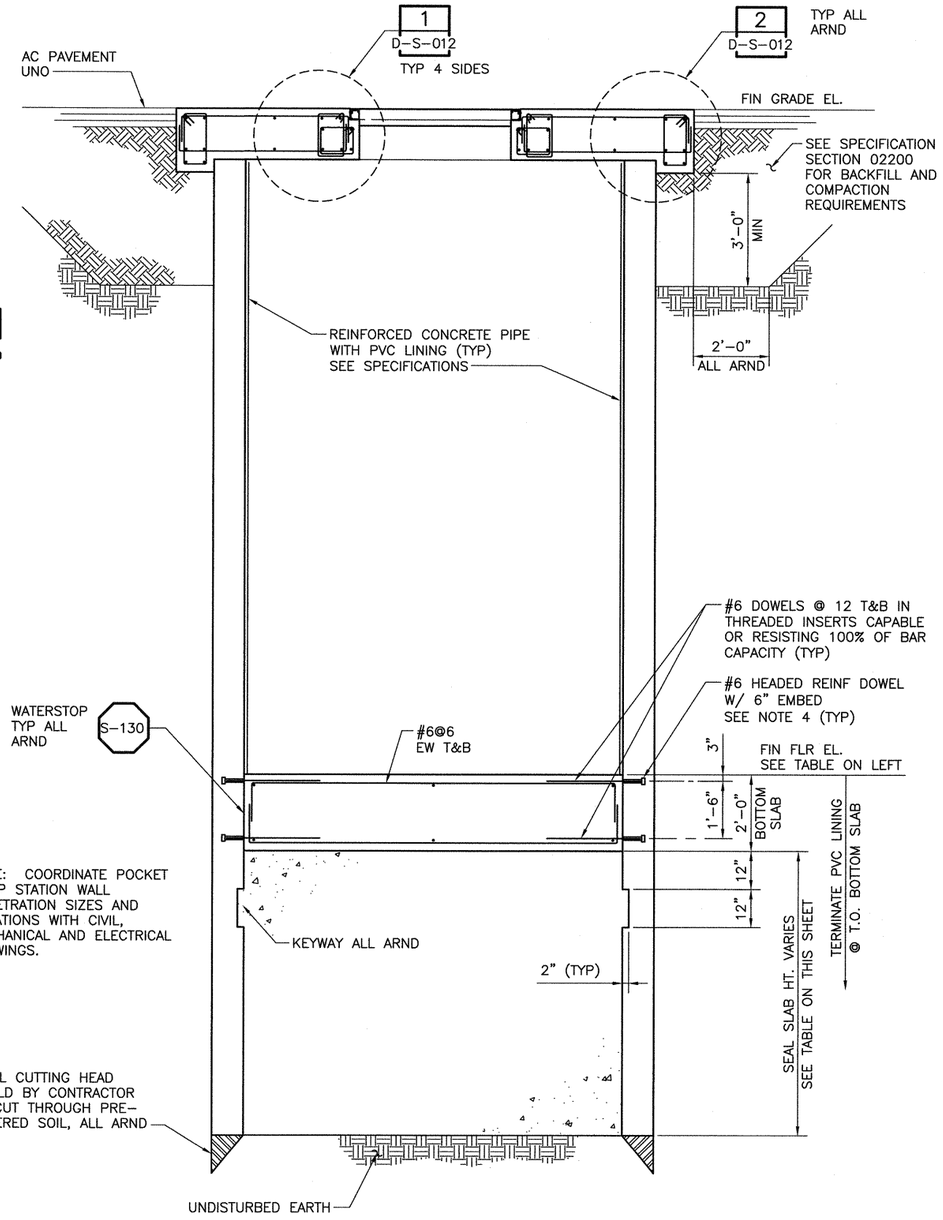


## SECTION A

SCALE: 1/2"=1'

| SITE LOCATION | 09B | 09C | 15B |
|---|---|---|---|
| POCKET PS GRADE EL. | 73.00' | 92.50' | 94.50' |
| POCKET PS FIN FLR EL. | 59.66' | 75.49' | 82.67' |
| POCKET PS I.D. | 8'-0" | 8'-0" | 8'-0" |
| MIN SEAL SLAB DEPTH | 5'-6" | 7'-0" | 4'-6" |

NOTES:

1. REFER TO SPEC SECTION 02355 FOR PUMP STATION RECOMMENDED CHRONOLOGICAL SEQUENCE OF CONSTRUCTION AND ADD'L INFO.
2. REFER TO THE TABLE HEREIN FOR THE GROUND ELEVATIONS AND FINISHED FLOOR ELEVATIONS OF THE WET WELL, PRECAST VALVE VAULT AND CLEAN UP VAULT AT VARIOUS SITES.
3. 8' OR 10' INTERNAL DIA PRECAST CONCRETE SECTIONS USED FOR THE SUBMERSIBLE PUMP STATIONS SHALL BE REINFORCED CONCRETE PIPE PER ASTM C-76, CLASS III. REINFORCEMENT SHALL BE CIRCULAR. JOINTS SHALL BE STEEL FLUSH BELL WITH O-RING GASKET, CONFORMING TO ASTM C-361.
4. SEE SPECIFICATION 03200 FOR ADD'L INFORMATION ON HEADED DOWELS.

| REV. NO. | DATE | DRWN | CHKD | REMARKS |
|---|---|---|---|---|

DESIGNED BY: CNO
DRAWN BY: TVN
CHECKED BY: LGS
DATE: MARCH 2012

CDM Smith
2295 Gateway Oaks Drive, Suite 240
Sacramento, CA 95833
Tel: (916) 567-9900

0 1/2 1
IF THIS BAR DOES NOT MEASURE 1" THEN ADJUST SCALE ACCORDINGLY

REGISTERED PROFESSIONAL ENGINEER CARLOS H. ORTEGA No. C 77836 Exp. 6/30/13 CIVIL STATE OF CALIFORNIA 5/13/2012

DIGALERT DIAL TOLL FREE 1-800-642-2444 AT LEAST TWO DAYS BEFORE YOU DIG
UNDERGROUND SERVICE ALERT OF NORTHERN CALIFORNIA

LOS OSOS WASTEWATER COLLECTION SYSTEM

# STRUCTURAL POCKET PUMP STATION PLANS, SECTION AND DETAILS

PROJECT NO.42502-83120
FILE NAME: D-S-013
SHEET NO.
D-S-013

©2012 CDM SMITH ALL RIGHTS RESERVED.
REUSE OF DOCUMENTS: THESE DOCUMENTS AND DESIGNS PROVIDED BY PROFESSIONAL SERVICE, INCORPORATED HEREIN, ARE THE PROPERTY OF CDM SMITH AND ARE NOT TO BE USED, IN WHOLE OR PART, FOR ANY OTHER PROJECT WITHOUT THE WRITTEN AUTHORIZATION OF CDM SMITH.
\\Wcsvr01\cad\ACAD2008\los osos\01-sheets\D\D-STR\ D-S-013 03/08/12 12:56 nguyentv XREFS: LosOsos-bdr, Pocket-PSModels, CA-CNO

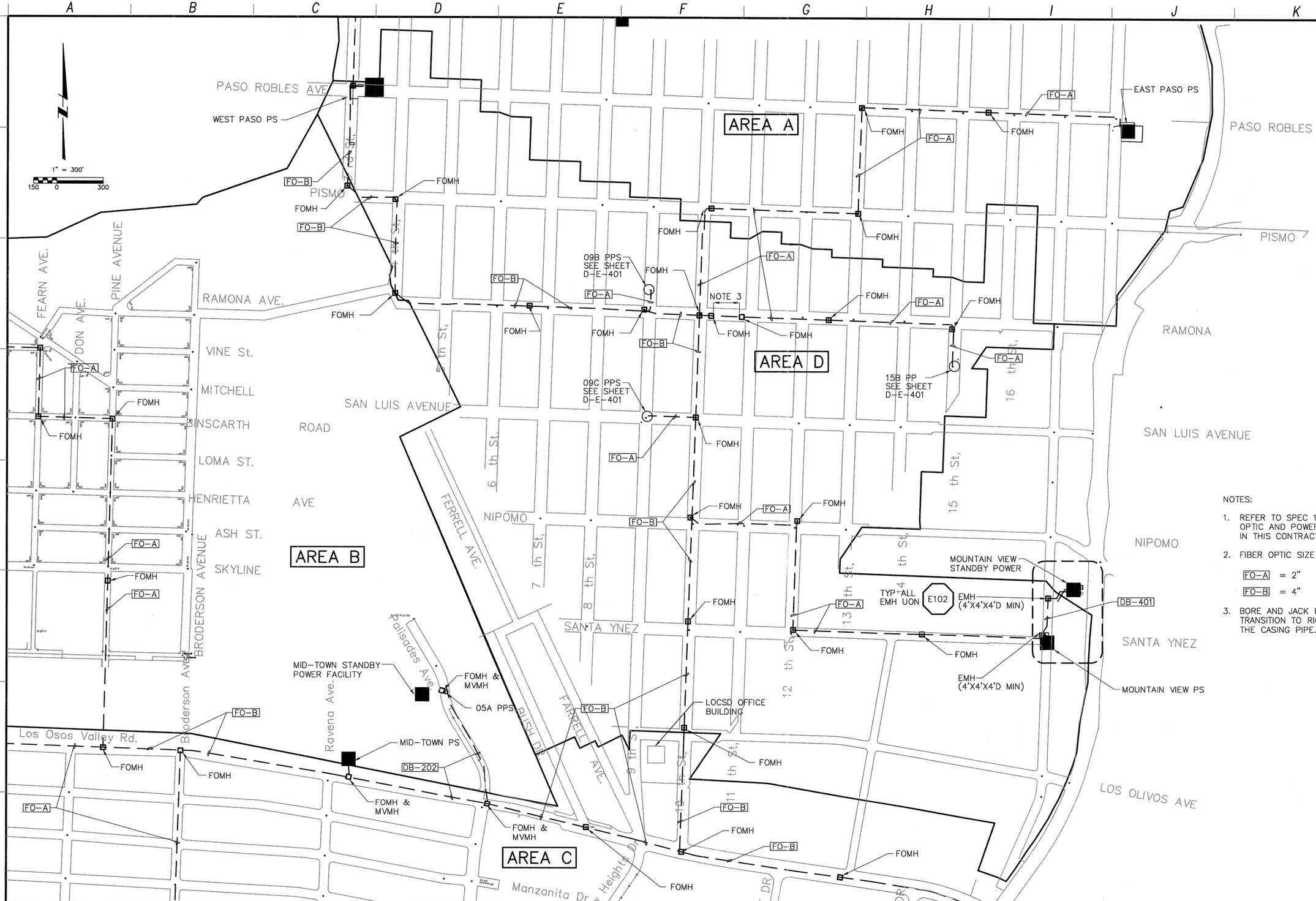


NOTES:

1. REFER TO SPEC 16800 FOR SCOPE OF FIBER OPTIC AND POWER CONDUIT WORK INCLUDED IN THIS CONTRACT.
2. FIBER OPTIC SIZE LEGEND:

   FO-A = 2"

   FO-B = 4"
3. BORE AND JACK INSTALLATION IN THIS AREA. TRANSITION TO RIGID STEEL CONDUIT WITHIN THE CASING PIPE.

| REV. NO. | DATE | DRWN | CHKD | REMARKS |
|---|---|---|---|---|
| | | | | |

DESIGNED BY: CAL
DRAWN BY: WKT
CHECKED BY: GNM
DATE: MARCH 2012

CDM Smith
2295 Gateway Oaks Drive, Suite 240
Sacramento, CA 95833
Tel: (916) 567-9900

0 1/2 1
IF THIS BAR DOES NOT MEASURE 1" THEN ADJUST SCALE ACCORDINGLY

DIGALERT
DIAL TOLL FREE 1-800-642-2444 AT LEAST TWO DAYS BEFORE YOU DIG
UNDERGROUND SERVICE ALERT OF NORTHERN CALIFORNIA

LOS OSOS WASTEWATER COLLECTION SYSTEM

# ELECTRICAL
# FIBER OPTIC & POWER CONDUIT PLAN AREA D

PROJECT NO.42502-83120
FILE NAME: D-E-001
SHEET NO.
D-E-001

©2012 CDM SMITH ALL RIGHTS RESERVED.
REUSE OF DOCUMENTS: THESE DOCUMENTS AND DESIGNS PROVIDED BY PROFESSIONAL SERVICE. INCORPORATED HEREIN, ARE THE PROPERTY OF CDM SMITH AND ARE NOT TO BE USED, IN WHOLE OR PART, FOR ANY OTHER PROJECT WITHOUT THE WRITTEN AUTHORIZATION OF CDM SMITH.
N:\ACAD2008\los osos\01-sheets\D\D-ELEC\ D-E-001 03/09/12 15:09 talbotwk XREFS: x-feat-row, loc_mdl, LosOsos-bdr, Ca-col, FIBER-OPTIC-keyplan, AREA-C-MIDTOWN-PS, X-PS-E-FO-04.

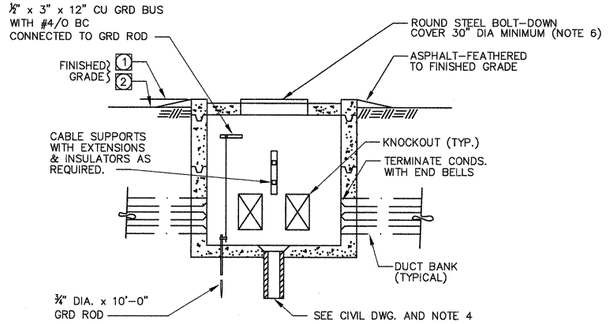


NOTES:

1. AT PAVED AREAS
2. UNPAVED AREAS.
3. PULL BOX INSTALLATION TO BE WATERTIGHT AFTER CONDUITS HAVE BEEN INSTALLED BY USING RAYCHEM RAYFLATE DUCT SEALING SYSTEM RDSS OR EQUAL.
4. FOR MANHOLE/PULL BOX NOT SHOWN WITH DRAINAGE PIPING ON CIVIL DRAWINGS, PROVIDE A MINIMUM OF 5FT OF 4" PD TO A 5FT CUBED TYPE DRAIN ROCK WITH FILTER FABRIC AROUND.
5. MANHOLE MINIMUM SIZE AS SHOWN ON DRAWINGS.
6. PROVIDE COLLAR OR CHIMNEY IF REQUIRED TO RAISE GRADE.

## TYPICAL PULLBOX/MANHOLE

E-102

MORE THAN ONE CONDUIT IN A RUN

SINGLE CONDUIT RUN

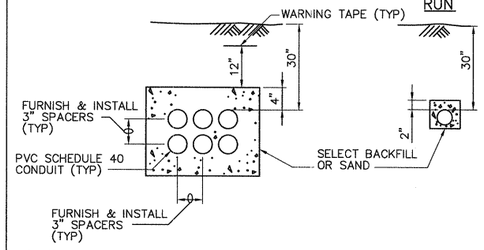


NOTES:

1. REFER TO DRAWINGS FOR ACTUAL CONDUIT SIZE AND NUMBER.

## TYPICAL DUCTBANK

SELECT BACKFILL OR SAND

E-103

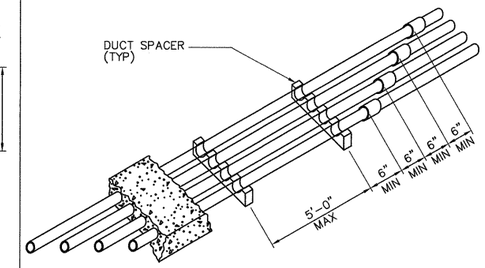


## TYPICAL DUCTBANK

JOINT/SUPPORT SPACING

REV 042999

E-108

DETAIL SHEET NOTES:

1. DETAILS SHALL BE USED IN ALL APPLICABLE LOCATIONS EVEN IF NOT SPECIFICALLY CALLED OUT ON THE DRAWINGS.

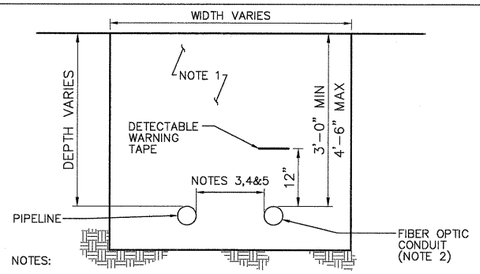


NOTES:

1. REFER TO CIVIL AND PIPELINE DRAWINGS FOR FOR ALL TRENCH DETAILS.
2. CONDUIT SIZE AS DETAILED ON ELECTRICAL AREA PLANS.
3. MINIMUM OFFSET FROM FORCE MAIN PIPE = 6".
4. MINIMUM OFFSET FROM GRAVITY SEWER = 3'-0".
5. MINIMUM OFFSET FROM ALL PIPELINE MANHOLE = 12"

## FIBER OPTIC CONDUIT IN PIPELINE TRENCH

REV 011312

E-701

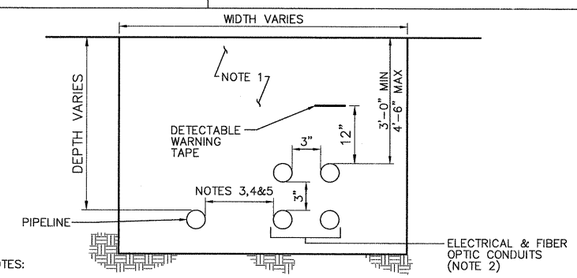


NOTES:

1. REFER TO CIVIL AND PIPELINE DRAWINGS FOR FOR ALL TRENCH DETAILS.
2. CONDUIT SIZE AS DETAILED ON ELECTRICAL AREA PLANS.
3. MINIMUM OFFSET FROM FORCE MAIN PIPE = 6".
4. MINIMUM OFFSET FROM GRAVITY SEWER = 3'-0".
5. MINIMUM OFFSET FROM ALL PIPELINE MANHOLE = 12"

## POWER & FIBER OPTIC CONDUIT IN PIPELINE TRENCH

REV 011312

E-702

## DB-401
## DUCTBANK SCHEDULE

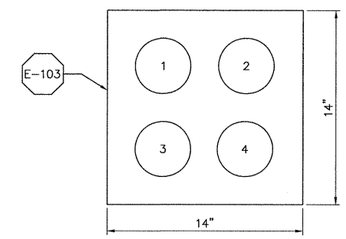


| DUCT | CONDUIT | REMARKS |
|---|---|---|
| 1 | 2"C; WITH POWER WIRES PER NOTE 2 | MV-P-1 POWER |
| 2 | 2"C; WITH POWER WIRES PER NOTE 2 | MV-P-2 POWER |
| 3 | 2"C; (REFER TO SPEC 16800) | FIBER OPTICS |
| 4 | 2"C; WITH CONTROL WIRES PER NOTES 2 & 3 | MV CONTROL |

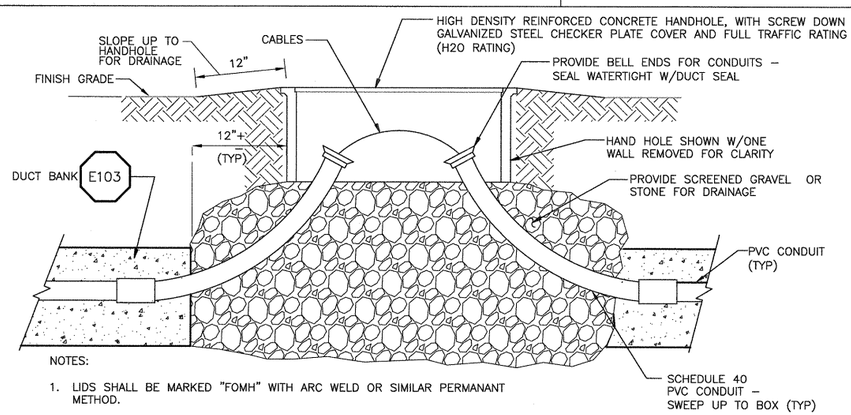


NOTES:

1. LIDS SHALL BE MARKED "FOMH" WITH ARC WELD OR SIMILAR PERMANANT METHOD.
2. NOMINAL MINIMUM INSIDE SIZE OF HANDHOLE 24"W X 36"L X 14"D UNLESS NOTED OTHERWISE. SEE SPECIFICATIONS FOR ADDITIONAL DETAIL.

## TYPICAL FOMH (FIBER OPTIC MANHOLE)

E104

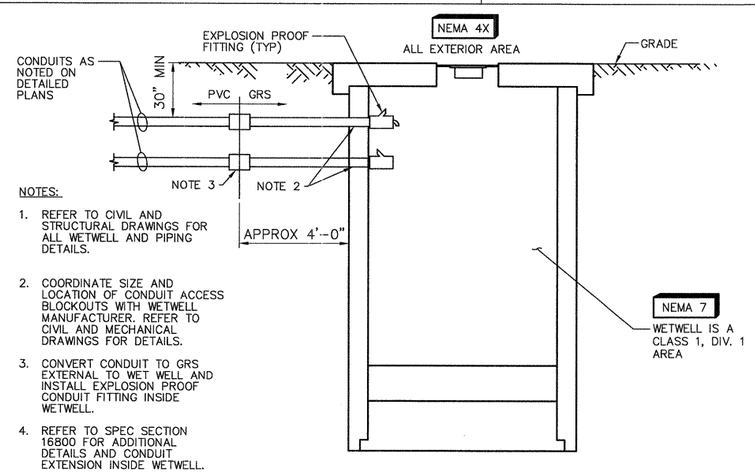


NOTES:

1. REFER TO CIVIL AND STRUCTURAL DRAWINGS FOR ALL WETWELL AND PIPING DETAILS.
2. COORDINATE SIZE AND LOCATION OF CONDUIT ACCESS BLOCKOUTS WITH WETWELL MANUFACTURER. REFER TO CIVIL AND MECHANICAL DRAWINGS FOR DETAILS.
3. CONVERT CONDUIT TO GRS EXTERNAL TO WET WELL AND INSTALL EXPLOSION PROOF CONDUIT FITTING INSIDE WETWELL.
4. REFER TO SPEC SECTION 16800 FOR ADDITIONAL DETAILS AND CONDUIT EXTENSION INSIDE WETWELL.

## WET WELL & VALVE VAULT CONDUIT ENTRANCE (NOTE 1)

E-703

| REV. NO. | DATE | DRWN | CHKD | REMARKS |
|---|---|---|---|---|

DESIGNED BY: CAL
DRAWN BY: JAW
CHECKED BY: GNM
DATE: MARCH 2012

CDM Smith
2295 Gateway Oaks Drive, Suite 240
Sacramento, CA 95833
Tel: (916) 567-9900

0 1/2 1
IF THIS BAR DOES NOT MEASURE 1" THEN ADJUST SCALE ACCORDINGLY

REGISTERED PROFESSIONAL ENGINEER
SHAILESH A. PURANIK
No. E 8841
Exp. 3/31/12
ELECTRICAL
STATE OF CALIFORNIA

DIGALERT
DIAL TOLL FREE
1-800-642-2444
AT LEAST TWO DAYS BEFORE YOU DIG
UNDERGROUND SERVICE ALERT OF NORTHERN CALIFORNIA

LOS OSOS WASTEWATER COLLECTION SYSTEM

# ELECTRICAL DETAILS

PROJECT NO.42502-83120
FILE NAME: D-E-002
SHEET NO.
D-E-002

©2012 CDM SMITH ALL RIGHTS RESERVED.
REUSE OF DOCUMENTS: THESE DOCUMENTS AND DESIGNS PROVIDED BY PROFESSIONAL SERVICE, INCORPORATED HEREIN, ARE THE PROPERTY OF CDM SMITH AND ARE NOT TO BE USED, IN WHOLE OR PART, FOR ANY OTHER PROJECT WITHOUT THE WRITTEN AUTHORIZATION OF CDM SMITH.
N:\ACAD2008\los osos\01-sheets\D\D-ELEC\ D-E-002 03/12/12 11:21 rushma XREFS: LosOsos-bdr, ELE-STD-DTLS, Co-cal, Ductbank_details

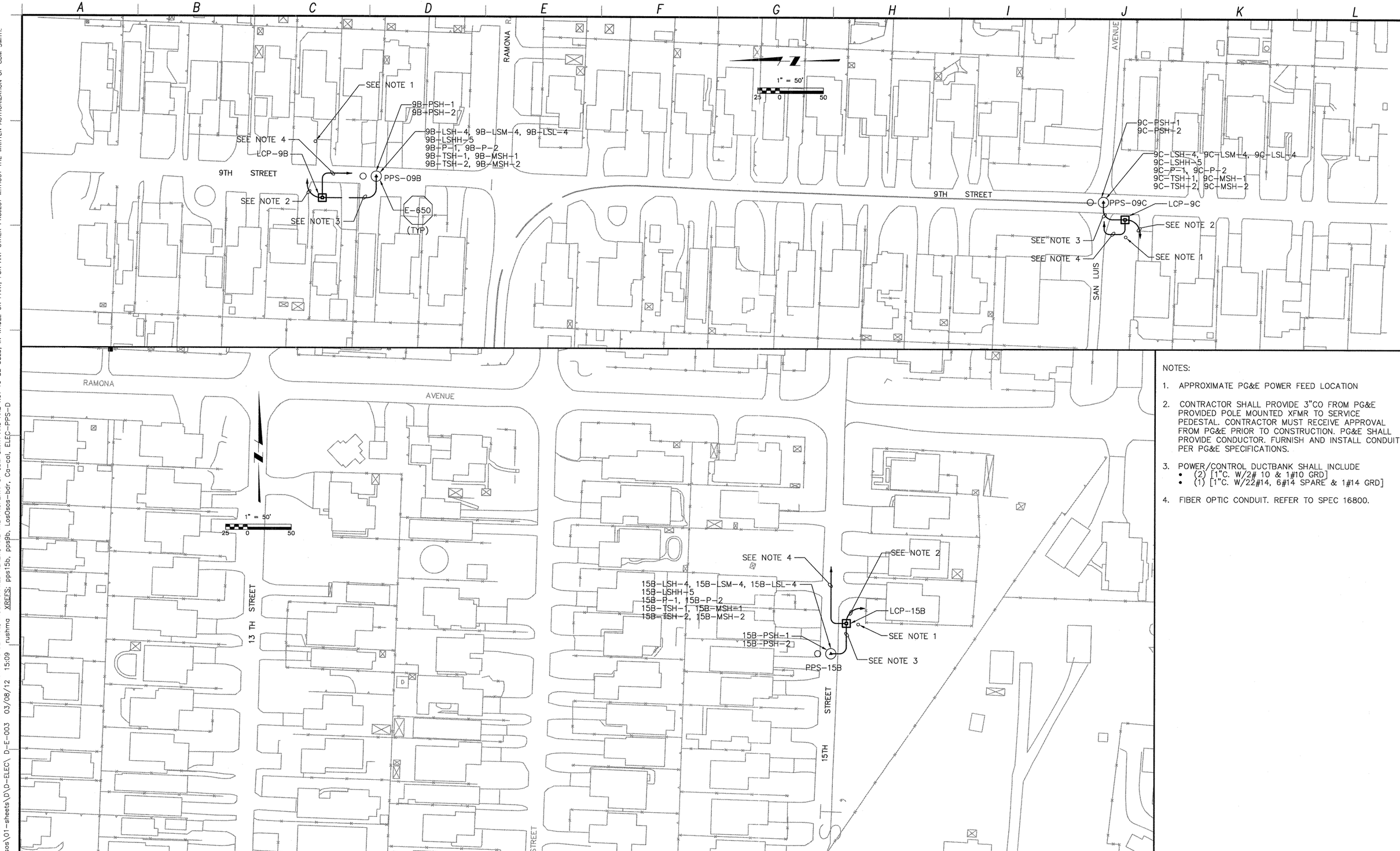


NOTES:

1. APPROXIMATE PG&E POWER FEED LOCATION
2. CONTRACTOR SHALL PROVIDE 3"CO FROM PG&E PROVIDED POLE MOUNTED XFMR TO SERVICE PEDESTAL. CONTRACTOR MUST RECEIVE APPROVAL FROM PG&E PRIOR TO CONSTRUCTION. PG&E SHALL PROVIDE CONDUCTOR. FURNISH AND INSTALL CONDUIT PER PG&E SPECIFICATIONS.
3. POWER/CONTROL DUCTBANK SHALL INCLUDE
   - (2) [1"C. W/2# 10 & 1#10 GRD]
   - (1) [1"C. W/22#14, 6#14 SPARE & 1#14 GRD]
4. FIBER OPTIC CONDUIT. REFER TO SPEC 16800.

| REV. NO. | DATE | DRWN | CHKD | REMARKS |
|---|---|---|---|---|

DESIGNED BY: CAL
DRAWN BY: JAW
CHECKED BY: GNM
DATE: MARCH 2012

CDM Smith
2295 Gateway Oaks Drive, Suite 240
Sacramento, CA 95833
Tel: (916) 567-9900

0 1/2 1
IF THIS BAR DOES NOT MEASURE 1" THEN ADJUST SCALE ACCORDINGLY

REGISTERED PROFESSIONAL ENGINEER
CHARLES L. MARQUIST II
No. E 8841
Exp. 3/31/12
ELECTRICAL
STATE OF CALIFORNIA

DIGALERT
DIAL TOLL FREE
1-800-642-2444
AT LEAST TWO DAYS BEFORE YOU DIG
UNDERGROUND SERVICE ALERT OF NORTHERN CALIFORNIA

LOS OSOS WASTEWATER COLLECTION SYSTEM
ELECTRICAL
POCKET PUMP STATIONS
09B, 09C & 15B
ELECTRICAL SITE PLAN

PROJECT NO.42502-83120
FILE NAME: D-E-401
SHEET NO.
D-E-401

©2012 CDM SMITH ALL RIGHTS RESERVED.
REUSE OF DOCUMENTS: THESE DOCUMENTS AND DESIGNS PROVIDED BY PROFESSIONAL SERVICE, INCORPORATED HEREIN, ARE THE PROPERTY OF CDM SMITH AND ARE NOT TO BE USED, IN WHOLE OR PART, FOR ANY OTHER PROJECT WITHOUT THE WRITTEN AUTHORIZATION OF CDM SMITH.
N:\ACAD2008\los osos\01-sheets\D\D-ELEC\ D-E-003 03/08/12 15:09 rushma XREFS: pps15b, pps9b, LosOsos-bdr, Ca-cal, ELEC-PPS-D