SAFE ROUTES TO SCHOOL IMPROVEMENTS ON BEECHNUT AVENUE, THOMPSON AVENUE, AND PRICE STREET, NIPOMO, CA
CONTRACT NO. 300362
FEDERAL NO. SR2SF-5949(109)

TABLE OF CONTENTS

Beginning w/
Page No.

NOTICE AND INSTRUCTIONS TO BIDDERS 1

IMPORTANT SPECIAL NOTICE 2

NOTICE TO BIDDERS 3

BID PROTESTS 6

SPECIAL INSTRUCTIONS TO BIDDERS 7

BID PROPOSAL AND FORMS 8

BID PROPOSAL 9

ADDENDA ACKNOWLEDGMENT 12

DESIGNATION OF SUBCONTRACTORS FORM 13

DESIGNATION OF SUBCONTRACTORS FORM – ADDITIVE BID ITEM 1 ..... 13(a)

DESIGNATION OF SUBCONTRACTORS FORM – ADDITIVE BID ITEM 2 ..... 13(b)

UDBE COMMITMENT FORM 14

UDBE COMMITMENT FORM – BASE BIDE PLUS ADDITIVE ITEM 1 ..... 14(a)

UDBE COMMITMENT FORM – BASE BID PLUS ADDITIVE ITEMS 1 & 2 ..... 14(b)

UDBE INFORMATION - GOOD FAITH EFFORTS 15

BIDDER'S LIST OF SUBCONTRACTORS (DBE AND NON-DBE) 18

EQUAL EMPLOYMENT OPPORTUNITY CERTIFICATION 20

CERTIFICATION OF NON-SEGREGATED FACILITIES 21

NONCOLLUSION AFFIDAVIT 22

DEBARMENT AND SUSPENSION CERTIFICATION 23

PUBLIC CONTRACT CODE SECTION 10162 QUESTIONNAIRE 24

PUBLIC CONTRACT CODE SECTION 10232 STATEMENT 25

PUBLIC CONTRACT CODE SECTION 10285.1 STATEMENT 26

NON-LOBBYING CERTIFICATION FOR FEDERAL AID CONTRACTS 27

DISCLOSURE OF LOBBYING ACTIVITIES 28

BIDDER'S BOND 30

AGREEMENT 33

AGREEMENT 34

AGREEMENT SIGNATURE PAGE 44

PERFORMANCE BOND 45
PAYMENT BOND 48
DBE INFORMATION – BASE BID 51
DBE INFORMATION – BASE BID PLUS ADDITIVE ITEM 1 ..... 51(a)
DBE INFORMATION – BASE BID PLUS ADDITIVE ITEMS 1 & 2 ..... 51(b)
SPECIAL PROVISIONS 52
SECTION 1. SPECIFICATIONS AND PLANS 54
SECTION 2. PROPOSAL REQUIREMENTS AND CONDITIONS 55
2-1.01 PROPOSAL REQUIREMENTS AND CONDITIONS 55
2-1.02 REQUIRED LISTING OF PROPOSED SUBCONTRACTORS 56
2-1.03 FEDERAL LOBBYING RESTRICTIONS 57
2-1.04 DISADVANTAGED BUSINESS ENTERPRISE (DBE) 58
2-1.04A UDBE COMMITMENT SUBMITTAL 59
2-1.04B UDBE GOOD FAITH EFFORT SUBMITTAL 60
SECTION 3. AWARD AND EXECUTION OF CONTRACT 62
3-1.01 AWARD OF CONTRACT 62
3-1.02 CONTRACT BONDS 63
3-1.03 EXECUTION OF CONTRACT 63
SECTION 4. PROSECUTION AND PROGRESS OF THE WORK 64
4-1.01 GENERAL 64
4-1.02 LIQUIDATED DAMAGES 64
4-1.03 SUBMITTALS 65
4-1.04 MANDATORY PRE-CONSTRUCTION CONFERENCE 65
SECTION 5. GENERAL AND MISCELLANEOUS 65
5-1.01 DEFINITIONS AND TERMS 65
5-1.02 SCOPE OF WORK 65
5-1.03 CONTROL OF WORK 66
5-1.04 PREVAILING WAGE 67
5-1.05 PRESERVATION OF PROPERTY 68
5-1.06 PROGRESS SCHEDULE 69
5-1.07 MEASUREMENT AND PAYMENT 69
5-1.08 DETERMINATION OF DISPUTES 71

TABLE OF CONTENTS

Beginning w/
Page No.

NOTICE AND INSTRUCTIONS TO BIDDERS 1

IMPORTANT SPECIAL NOTICE 2

NOTICE TO BIDDERS 3

BID PROTESTS 6

SPECIAL INSTRUCTIONS TO BIDDERS 7

BID PROPOSAL AND FORMS 8

BID PROPOSAL 9

ADDENDA ACKNOWLEDGMENT 12

DESIGNATION OF SUBCONTRACTORS FORM 13

DESIGNATION OF SUBCONTRACTORS FORM – ADDITIVE BID ITEM 1 ..... 13(a)

DESIGNATION OF SUBCONTRACTORS FORM – ADDITIVE BID ITEM 2 ..... 13(b)

UDBE COMMITMENT FORM 14

UDBE COMMITMENT FORM – BASE BIDE PLUS ADDITIVE ITEM 1 ..... 14(a)

UDBE COMMITMENT FORM – BASE BID PLUS ADDITIVE ITEMS 1 & 2 ..... 14(b)

UDBE INFORMATION - GOOD FAITH EFFORTS 15

BIDDER'S LIST OF SUBCONTRACTORS (DBE AND NON-DBE) 18

EQUAL EMPLOYMENT OPPORTUNITY CERTIFICATION 20

CERTIFICATION OF NON-SEGREGATED FACILITIES 21

NONCOLLUSION AFFIDAVIT 22

DEBARMENT AND SUSPENSION CERTIFICATION 23

PUBLIC CONTRACT CODE SECTION 10162 QUESTIONNAIRE 24

PUBLIC CONTRACT CODE SECTION 10232 STATEMENT 25

PUBLIC CONTRACT CODE SECTION 10285.1 STATEMENT 26

NON-LOBBYING CERTIFICATION FOR FEDERAL AID CONTRACTS 27

DISCLOSURE OF LOBBYING ACTIVITIES 28

BIDDER'S BOND 31

AGREEMENT 34

AGREEMENT 35

AGREEMENT SIGNATURE PAGE 45

PERFORMANCE BOND 46
PAYMENT BOND 49
DBE INFORMATION – BASE BID 52
DBE INFORMATION – BASE BID PLUS ADDITIVE ITEM 1 ..... 51(a)
DBE INFORMATION – BASE BID PLUS ADDITIVE ITEMS 1 & 2 ..... 51(b)
SPECIAL PROVISIONS 52
SECTION 1. SPECIFICATIONS AND PLANS 54
SECTION 2. PROPOSAL REQUIREMENTS AND CONDITIONS 55
2-1.01 PROPOSAL REQUIREMENTS AND CONDITIONS 55
2-1.02 REQUIRED LISTING OF PROPOSED SUBCONTRACTORS 56
2-1.03 FEDERAL LOBBYING RESTRICTIONS 57
2-1.04 DISADVANTAGED BUSINESS ENTERPRISE (DBE) 58
2-1.04A UDBE COMMITMENT SUBMITTAL 59
2-1.04B UDBE GOOD FAITH EFFORT SUBMITTAL 60
SECTION 3. AWARD AND EXECUTION OF CONTRACT 62
3-1.01 AWARD OF CONTRACT 62
3-1.02 CONTRACT BONDS 63
3-1.03 EXECUTION OF CONTRACT 63
SECTION 4. PROSECUTION AND PROGRESS OF THE WORK 64
4-1.01 GENERAL 64
4-1.02 LIQUIDATED DAMAGES 64
4-1.03 SUBMITTALS 65
4-1.04 MANDATORY PRE-CONSTRUCTION CONFERENCE 65
SECTION 5. GENERAL AND MISCELLANEOUS 65
5-1.01 DEFINITIONS AND TERMS 65
5-1.02 SCOPE OF WORK 65
5-1.03 CONTROL OF WORK 66
5-1.04 PREVAILING WAGE 67
5-1.05 PRESERVATION OF PROPERTY 68
5-1.06 PROGRESS SCHEDULE 69
5-1.07 MEASUREMENT AND PAYMENT 69
5-1.08 DETERMINATION OF DISPUTES 71

5-1.09 AUDIT OF RECORDS 74
5-1.10 CONTRACTOR'S REPORTS 74
5-1.11 REMOVAL OF ASBESTOS AND HAZARDOUS SUBSTANCES 74
5-1.12 SUBCONTRACTOR AND DBE RECORDS 75
5-1.13 DBE CERTIFICATION STATUS 76
5-1.14 PERFORMANCE OF SUBCONTRACTORS 79
5-1.15 SUBCONTRACTING 80
5-1.16 PROMPT PROGRESS PAYMENT TO SUBCONTRACTORS 81
5-1.17 PROMPT PAYMENT OF FUNDS WITHHELD TO SUBCONTRACTORS 81
5-1.18 BUY AMERICA REQUIREMENTS 82
5-1.19 SUBMITTALS 82
5-1.20 MEANS AND METHODS 83
5-1.21 LEGAL ADDRESS OF THE CONTRACTOR 83
5-1.22 WEEKLY PROGRESS MEETINGS 83
5-1.23 SOLID WASTE MANAGEMENT 83
5-1.24 AREA FOR CONTRACTOR'S USE 87
5-1.25 SOUND CONTROL REQUIREMENTS 87
5-1.26 RELATIONS WITH CALIFORNIA DEPARTMENT OF FISH AND GAME 88
5-1.27 TRENCH SAFETY 89
5-1.28 ENVIRONMENTALLY SENSITIVE AREA 89
5-1.29 NON-HIGHWAY FACILITIES (INCLUDING UTILITIES) 89
SECTION 6. FEDERAL MINIMUM WAGES 91
SECTION 7. FEDERAL REQUIREMENTS FOR FEDERAL-AID CONSTRUCTION PROJECTS FR-1
SECTION 8. MATERIALS 8-1
SECTION 9. DESCRIPTION OF WORK 9-1
SECTION 10. CONSTRUCTION DETAILS 10-1
SECTION 11. AMENDMENTS TO STANDARD SPECIFICATIONS 11-1
ATTACHMENT A SUMMARY OF ENVIRONMENTAL PERMITS, CONDITIONS, AND MITIGATION
ATTACHMENT B CALIFORNIA DEPARTMENT OF FISH AND GAME STREAMBED ALTERATION AGREEMENT

ATTACHMENT C NEPA CATEGORIZED EXCLUSION DETERMINATION AND CONDITIONS OF ENVIRONMENTAL REVIEW
ATTACHMENT D GEOTECHNICAL INVESTIGATION REPORT
ATTACHMENT E CONSTRUCTION DETAIL
ATTACHMENT F PROJECT PLANS

COUNTY OF SAN LUIS OBISPO
DEPARTMENT OF PUBLIC WORKS AND TRANSPORTATION

NOTICE AND INSTRUCTIONS TO BIDDERS

FOR

SAFE ROUTES TO SCHOOL IMPROVEMENTS ON
BEECHNUT AVENUE, THOMPSON AVENUE,
AND PRICE STREET, NIPOMO, CA
CONTRACT NO. 300362
FEDERAL NO. SR2SF-5949(109)

IMPORTANT SPECIAL NOTICE

Attention is directed to the following sections of the Special Provisions regarding the County's Race/Gender Conscious DBE program:

Section 2-1.04	Disadvantaged Business Enterprise (DBE)
Section 3-1.01	Award of Contract
Section 5-1.11	Subcontractor and DBE Records
Section 5-1.12	DBE Certification Status
Section 5-1.13	Performance of Subcontractors
Section 5-1.14	Subcontracting

Bidders may submit requests for information to the County during the bid period at the following website:

http://www.slocounty.ca.ogv/PW/Design_Division/Projects_Out_To_Bid.htm

Attention is directed to Section 4-1.03, "Submittals" of these Special Provisions regarding the time period to submit the listed items upon receipt of the fully executed contract.

COUNTY OF SAN LUIS OBISPO
DEPARTMENT OF PUBLIC WORKS AND TRANSPORTATION
NOTICE TO BIDDERS

Sealed proposals will be received at the office of the County Clerk, 1055 Monterey Street, Room D-120, San Luis Obispo, California 93408 until 3:00 P.M. on Thursday, _____, 20__, which bids will then be opened and declared at 3:15 o'clock P.M. on the above mentioned date at a public meeting at 1055 Monterey Street, Room D-120, by the County Clerk, for the following Public Works Project:

SAFE ROUTES TO SCHOOL IMPROVEMENTS ON
BEECHNUT AVENUE, THOMPSON AVENUE,
AND PRICE STREET, NIPOMO, CA
CONTRACT NO. 300362
FEDERAL NO. SR2SF-5949(109)

Any bid received at the Office of the Clerk of the Board of Supervisors of the County of San Luis Obispo after 3:00 P.M. on the date specified above shall not be considered, and shall be returned to the bidder unopened.

THIS PROJECT IS SUBJECT TO THE "BUY AMERICA" PROVISIONS OF THE SURFACE TRANSPORTATION ASSISTANCE ACT OF 1982 AS AMENDED BY THE INTERMODAL SURFACE TRANSPORTATION EFFICIENCY ACT OF 1991.

The UDBE Contract goal is 9 percent, applicable to the base bid and any or all of the additive bid items.

Bids are required for the entire work described herein.

A bound copy of a reduced size set of the Project Plans, the Agreement, the General and Special Provisions, and blank forms suitable for use in bidding on said work may be obtained from the Department of Public Works, Room 207, County Government Center, San Luis Obispo, CA 93408 and may be purchased therefrom for ($18.50) eighteen dollars and fifty cents, (tax included), per bound copy, said purchase cost not to be refunded. No bid will be considered which is not in accordance with or on the forms herein referred to. **A full size set of the Project Plans, and cross sections if any, are charged separately at the department's current rates and will be provided only upon request.** Revised 12/09

Federal funds are being used on this project, and therefore, the Davis-Bacon Act applies. The Federal minimum wage rates for this project as predetermined by the United States Secretary of Labor are set forth in the Special Provisions. If there is a difference between the minimum wage rates predetermined by the Secretary of Labor and the prevailing wage rates determined to be applicable to this contract by the Director of the California Department of Industrial Relations for similar classifications of labor, the Contractor and subcontractors shall pay not less than the higher wage rate.

Pursuant to the provisions of Section 1773 of the California Labor Code, the Board of Supervisors of the County of San Luis Obispo has obtained from the Director of the California Department of Industrial Relations the general prevailing rate of per diem wages and the general prevailing rate for holiday and overtime work for the locality in which the work is to be performed for each needed craft, classification, or type of workman. Copies of said prevailing rate of per diem wages are on file in the Office of the Clerk of the Board of Supervisors and available at the California Department of Industrial Relations' web site address at: www.dir.ca.gov/DLSR/PWD.

Bidders are advised that any contractor who is awarded a public works project and intends to use a craft or classification not shown on the general prevailing wage determination may be required to pay the wage rate of that craft or classification most closely related to it as shown in the general determinations effective at the time of the call for bids.

Travel and subsistence payments shall be in accordance with Section 1773.1 of the Labor Code. Wage rates for holiday and overtime work shall be in accordance with Section 1773 of the Labor Code. Attention is directed to the provisions in Sections 1777.5, 1777.6 and 1777.7 of the Labor Code concerning the employment of apprentices by the Contractor or any subcontractor. Attention is directed to the provisions in Section 1776 of the Labor Code concerning payroll records. Revised 8/09

Attention is directed to the provisions in Sections 1810 – 1815 of the Labor Code concerning work hours. Revised 8/09

Bidders are advised that the Copeland Anti-Kickback Act (18 USC 874) as supplemented in the Department of Labor regulations (29 CFR Part 3) applies to this contract. This act provides that the Contractor shall be prohibited from inducing any person employed in the construction, completion, or repair of public facilities to give up any part of the compensation which they are otherwise entitled. Revised 8/09

The bidder's attention is directed to the provisions of Section 2-1.02, "Required Listing of Proposed Subcontractors," of the Special Provisions regarding the requirement that proposed subcontractors be listed in the bidder's proposal. A "DESIGNATION OF SUBCONTRACTORS" form for listing subcontractors, as required, is included in the section titled "Bid Proposal and Forms" of the Contract Documents. This form must be completed and submitted with bidder's bid proposal. **The bidder shall complete and submit three "DESIGNATION OF SUBCONTRACTORS" forms with bidder's bid proposal in order to be considered responsive, one form for the Base Bid and one form for each of the Additive Bid items.**

The bidder's attention is directed to the provisions of Section 2-1.04A, "UDBE Commitment Submittal," of the Special Provisions regarding the requirement that bidders submit the "UDBE COMMITMENT" form, included in the section titled "Bid Proposal and Forms" of the Contract Documents. **The bidder shall submit a "UDBE COMMITMENT" form for each of the following scenarios with bidder's bid proposal in order to be considered responsive:**

Base Bid
Base Bid plus Additive Item 1
Base Bid plus Additive Items 1 and 2 Revised 8/09

The bidder's attention is directed to the provisions of Section 2-1.04B, "UDBE Good Faith Effort Submittal," of the Special Provisions regarding the requirement that bidder's submit the "UDBE INFORMATION - GOOD FAITH EFFORTS" form, included in the section titled "Bid Proposal and Forms" of the Contract Documents.

All bonds and endorsements thereto to be submitted pursuant to this contract shall be written by a company authorized to do surety business in the State of California with a minimum of a "B" rating and of adequate financial category as rated by the current edition of Best's Key Rating Guide as published by A.M. Best Company, Inc., Oldwick, New Jersey 08858.

Each bid must be accompanied by a form of bidder's security, namely cash, certified check, cashier's check, or bidder's bond, in the amount of ten percent (10%) of the total of the bid. Said checks shall be made payable to the County of San Luis Obispo. Said bidder's bond shall be on a form approved by or acceptable to the County. Said bidder's security shall be a guarantee that the bidder, if awarded the contract, will enter into a contract for the performance thereof satisfactory to said Board of Supervisors.

All addenda issued before the time in which to submit bids expires shall form a part of the Contract Documents and shall be covered in the bid. Bidders shall acknowledge and confirm receipt of each and every addendum in their bid proposal. (For example, if the County issues three addenda, each addendum shall be listed separately and acknowledged by the Bidder.)

Within five (5) calendar days, not including Saturdays, Sundays, and legal holidays, after receipt of notice that the contract has been awarded, the successful bidder, shall execute a written contract with the County in the form prescribed herein.

At the time of execution of the contract, the successful bidder shall submit the certificates of insurance stipulated in Article 7 of the Agreement, and, in addition thereto, shall furnish a "Performance" Bond in the sum of one hundred percent (100%) of the contract bid to guarantee the performance of the contract, and a "Payment Bond" in the sum of one hundred percent (100%) of the contract bid. The bond forms are included in the section titled "Agreement" of the Contract Documents.

At the time of execution of the contract, the successful bidder shall submit the "DBE INFORMATION" form, included in the section titled "Agreement" of the Contract Documents. Revised 8/09

The bidder's attention is directed to the provisions of Section 4-1.03, "Submittals," of the Special Provisions regarding the requirement that the successful bidder submit the Storm Water Pollution Prevention Plan, Recycling Plan, Proposed Progress Schedule, and Traffic Control Plan within 10 calendar days of receipt of the fully executed contract. Revised 1/10

In accordance with San Luis Obispo County Code, Title 8, Health and Sanitation, Chapter 8.12, "Solid Waste Management," a project "Recycling Plan" and "Disposal Report" are required for this contract. The bidder's attention is directed to Sections 4-1.03, "Submittals,"

and 5-1.23, "Solid Waste Management," of the section titled "Special Provisions" of the Contract Documents. Revised 1/10

Attention is directed to the provisions of Section 5-1.07, "Measurement and Payment," of the Special Provisions permitting the substitution of equivalent securities for any moneys withheld to ensure performance of this contract. Said Section 5-1.07 is incorporated by reference in this invitation for bid as if fully set forth at length.

The Board of Supervisors reserves the right to reject any or all bids, and to waive discrepancies, irregularities, informalities or any other errors in the bids or bidding, if to do so seems to best serve the public interest. The right of the Board of Supervisors to waive errors applies even if the Contract Documents state that a discrepancy, irregularity, informality or other error makes a bid nonresponsive, so long as the error does not constitute a material error. Revised 9/09

The successful bidder must be licensed to perform the work in accordance with the laws of the State of California. Accordingly, the successful bidder shall possess a Class A general engineering contractor's license at the time this contract is awarded. In the alternative, the successful bidder shall possess a specialty contractor's license that permits the successful bidder to perform with his or her own organization contract work amounting to not less than 30% of the original total contract price and to subcontract the remaining work in accordance with Section 5-1.055, "Subcontracting," of the Amendments to the Standard Specifications. Failure of the bidder to be properly and adequately licensed shall constitute a failure to execute the contract and shall result in the forfeiture of the bidder's security.

BID PROTESTS

Any bid protest must be submitted in writing to the Department of Public Works, Room 207, County Government Center, 976 Osos Street, San Luis Obispo, CA 93408; Attention: Design Engineer before 5 p.m. of the 7th business day following bid opening.

The initial protest document shall contain a complete statement of the basis for the protest and all evidence and documents supporting the protest available to the protesting party. The protest shall refer to the specific portion of the document which forms the basis for the protest. The protest shall include the name, address and telephone number of the person representing the protesting party. The party filing the protest shall concurrently transmit a copy of the initial protest document and any attached documentation to all other parties with a direct financial interest which may be adversely affected by the outcome of the protest. Such parties shall include all other bidders who appear to have a reasonable prospect of receiving an award depending upon the outcome of the protest. The County Board of Supervisors will issue a decision on the protest.

The procedure and time limits set forth in this section are mandatory and are the bidder's sole and exclusive remedy in the event of bid protest and failure to comply with these procedures shall constitute a waiver of any right to further pursue the bid protest, including filing a Government Code Claim or legal proceedings.

SPECIAL INSTRUCTIONS TO BIDDERS:

The bidder's attention is directed to Sub-Section 1.2 "Qualified Suppliers" of Section 10-1.31. "Special Specifications for Prefabricated Bridge" of the contract special provisions. Each bidder is required to identify their intended bridge supplier as part of the bid submittal. Qualified suppliers must have at least 5 years experience fabricating these type structures.

Pre-approved Manufacturers:
CONTECH Bridge Solutions Inc.
8301 State Highway 29 North
Alexandria, Minnesota 56308
1-800-328-2047

The Contractor must provide the documentation requested in Sub-Section 1.2, for any proposed supplier who is not pre-approved, within 7 days after award of the contract.

Bidders must satisfy themselves by personal examination of the location of the proposed work and by such other means as they prefer as to the actual conditions and requirements of the work, and shall not at any time after submission of the bid dispute, complain, or assert that there was any misunderstanding in regard to the nature or amount of work to be done.

By order of the Board of Supervisors of the County of San Luis Obispo made this _____day of _____, 20__.

County Clerk and Ex-officio Clerk
of the Board of Supervisors

By _____
Deputy Clerk

COUNTY OF SAN LUIS OBISPO
DEPARTMENT OF PUBLIC WORKS AND TRANSPORTATION

BID PROPOSAL AND FORMS

FOR

SAFE ROUTES TO SCHOOL IMPROVEMENTS ON
BEECHNUT AVENUE, THOMPSON AVENUE,
AND PRICE STREET, NIPOMO, CA
CONTRACT NO. 300362
FEDERAL NO. SR2SF-5949(109)

BID PROPOSAL

TO: THE BOARD OF SUPERVISORS OF THE COUNTY OF SAN LUIS OBISPO, STATE OF CALIFORNIA:

Pursuant to and in compliance with your Notice to Bidders, the undersigned, as bidder, declares that the only person or parties interested in this proposal as principals are those named herein; that this proposal is made without collusion with any other person, firm or corporation; that he/she is aware of the provisions of Section 3700 of the Labor Code which require every employer to be insured against liability for workers' compensation or to undertake self insurance in accordance with the provisions of that code, and he/she will comply with such provisions before commencing the performance of the work of this contract; that he/she has carefully examined the location of the proposed work, the annexed proposed form of contract, and he/she proposes, and agrees if this proposal is accepted, that he/she will contract with the Board of Supervisors of the County of San Luis Obispo in the form of the copy of the contract annexed hereto, to provide all necessary machinery, tools, apparatus and other equipment needed, and to do all of the work and furnish all the materials specified in the contract, in the manner and the time therein prescribed, and according to the requirements of the Department of Public Works and Transportation as therein set forth, and that he/she will take in full payment therefor the following unit prices, to-wit:

SAFE ROUTES TO SCHOOL IMPROVEMENTS
ON BEECHNUT AVENUE, THOMPSON AVENUE,
AND PRICE STREET, NIPOMO, CA
CONTRACT NO. 300362
FEDERAL NO. SR2SF-5949(109)
BID PROPOSAL

BASE BID - SIDEWALK IMPROVEMENTS (PRICE, BEECHNUT, THOMPSON AVE.)

ITEM NO.	CODE NO.	DESCRIPTION OF ITEM	APPROX. QUANTITY	UNIT OF MEASURE	UNIT PRICE (IN FIGURES) DOLLARS. CENTS	TOTAL AMOUNT DOLLARS. CENTS
1	120090	CONSTRUCTION AREA SIGNS	1	L.S.		
2	120100	TRAFFIC CONTROL SYSTEM	1	L.S.		
3	074020	WATER POLLUTION CONTROL	1	L.S.		
4	150716	REMOVE TRAFFIC STRIPE AND PAVEMENT MARKING	1	L.S.		
5	150857 (F)	REMOVE ASPHALT AND CONCRETE SURFACING	1353	SY		
6	152320	RESET ROADSIDE SIGN	4	EA		
7	160101	CLEARING AND GRUBBING	1	L.S.		
8	190101	ROADWAY EXCAVATION	772	CY		

9	260201	CLASS 2 AGGREGATE BASE	352	CY		
10	153155	COLD PLANE ASPHALT CONCRETE PAVEMENT (0.30 MAX.)	300	SY		
11	390132	HOT MIX ASPHALT (TYPE A)	132	TONS		
12	394002	PLACE HOT MIX ASPHALT (MISCELLANEOUS AREAS)	13	SY		
13	394048	PLACE HOT MIX ASPHALT DIKE (TYPE A)	160	LF		
14	510127	CLASS 2 CONCRETE (TYPE 6A RETAINING WALL FOOTING)	20	CY		
15	513551	RETAINING WALL STEM (TYPE 6A)	600	SF		
16	510502	MINOR CONCRETE (MINOR STRUCTURE)	12	CY		
17	641107	18" PLASTIC PIPE	345	LF		
18	731504	MINOR CONCRETE (CURB AND GUTTER)	810	LF		
19	731517A	MINOR CONCRETE (CURB RAMP)	5	CY		
20	731521	MINOR CONCRETE (SIDEWALK)	61	CY		
21	731516	MINOR CONCRETE (DRIVEWAY)	35	CY		
22	731507	MINOR CONCRETE (SPANDREL)	6	CY		
23	731521a	MINOR CONCRETE (D-4A SIDEWALK UNDERDRAIN)	6	EA		
24	731521b	MINOR CONCRETE (SIDEWALK UNDERDRAIN)	1	EA		
25	750007	FRAME AND GRATE	4	EA		
26	750007	MANHOLE COVER	1	EA		
27	840656	PAINT TRAFFIC STRIPE (2-COAT)	900	LF		
28	840666	PAINT PAVEMENT MARKING (2-COAT)	20	SY		
29	850102	PAVEMENT MARKER (REFLECTIVE)	62	EA		
					BASE BID TOTAL	

ADDITIVE BID 1 - PEDESTRIAN BRIDGE (TEFFT ST. - DANA ST.)

ITEM NO.	CODE NO.	DESCRIPTION OF ITEM	APPROX. QUANTITY	UNIT OF MEASURE	UNIT PRICE (IN FIGURES) DOLLARS. CENTS	TOTAL AMOUNT DOLLARS. CENTS
30	120090	CONSTRUCTION AREA SIGNS	1	L.S.		
31	120100	TRAFFIC CONTROL SYSTEM	1	L.S.		
32	160101	CLEARING AND GRUBBING	1	L.S.		
33	194001	ROADWAY EXCAVATION	12	CY		
34	197010	EMBANKMENT CONSTRUCTION (PEDESTRIAN PATHWAY)	25	CY		
35	260201	CLASS 2 AGGREGATE BASE	34	CY		
36	390103	HOT MIX ASPHALT (TYPE A)	50	TONS		
37	394002	PLACE HOT MIX ASPHALT (MISCELLANEOUS AREAS)	134	SY		
38	731517	MINOR CONCRETE (ADA LANDING)	2	CY		
39	510127	CLASS 2 CONCRETE (BRIDGE ABUTMENT & WINGWALL)	1	L.S.		
40	550204	STRUCTURAL STEEEL (BRIDGE)	2	EA		
41	840656	PAINT TRAFFIC STRIPE (2-COAT)	72	LF		
42	840666	PAINT PAVEMENT MARKING (2-COAT)	14	SY		
					TOTAL ADDITIVE BID ITEM 1	

ADDITIVE BID 2 - PEDESTRIAN BRIDGE (BRANCH ST. - TEFFT ST.)

ITEM NO.	CODE NO.	DESCRIPTION OF ITEM	APPROX. QUANTITY	UNIT OF MEASURE	UNIT PRICE (IN FIGURES) DOLLARS. CENTS	TOTAL AMOUNT DOLLARS. CENTS
43	120090	CONSTRUCTION AREA SIGNS	1	L.S.		
44	120100	TRAFFIC CONTROL SYSTEM	1	L.S.		
45	160101	CLEARING AND GRUBBING	1	L.S.		
46	194001	ROADWAY EXCAVATION	24	CY		
47	197010	EMBANKMENT CONSTRUCTION (PEDESTRIAN PATHWAY)	85	CY		
48	260201	CLASS 2 AGGREGATE BASE	37	CY		

49	390103	HOT MIX ASPHALT (TYPE A)	32	TONS		
50	731517	MINOR CONCRETE (ADA LANDING)	2	CY		
51	510127	CLASS 2 CONCRETE (BRIDGE ABUTMENT & WINGWALL)	1	L.S.		
52	550204	STRUCTURAL STEEL (BRIDGE)	1	EA		
					TOTAL ADDITIVE BID ITEM 2	

TOTAL BASE BID	
TOTAL ADDITIVE BID ITEM 1	
TOTAL ADDITIVE BID ITEM 2	
TOTAL ALL ITEMS	

Bidder's Name: _____

Bidder represents that he/she has hereinabove set forth for each unit basis item of work a unit price and a total for the item, and for each lump sum item a total for the item, all in clearly legible figures in the respective spaces provided for that purpose. In the case of unit basis items, the amount set forth under the "Total" column is the extension of the unit price bid on the basis of the approximate quantity for the item.

In case of discrepancy between the unit price and the total set forth for a unit basis item, the unit price shall prevail, provided, however, if the amount set forth as a unit price is ambiguous, unintelligible, or uncertain for any cause, or is omitted, or is the same amount as the entry in the "Total" column, then the amount set forth in the "Total" column for the item shall prevail and shall be divided by the estimated quantity for the item and the price thus obtained shall be the unit price.

In accordance with 23 CFR 635.102, proposals in which the prices are mathematically or materially unbalanced may be rejected. Following are the U.S. Comptroller General's definitions of mathematically and materially unbalanced bids:

- A bid is mathematically unbalanced if the bid is structured on the basis of nominal prices for some work and inflated prices for other work; that is, each element of the bid must carry its proportionate share of the total cost of the work plus profits.
- A bid is materially unbalanced if there is reasonable doubt that award to the bidder submitting the mathematically unbalanced bid will result in the lowest ultimate cost to the Government.

Revised 8/09

Bidder shall execute and submit with their proposal, copies of each of the following:

- DESIGNATION OF SUBCONTRACTORS
- UDBE COMMITMENT
- BIDDER'S LIST OF SUBCONTRACTORS (DBE and NON-DBE)
- EQUAL EMPLOYMENT OPPORTUNITY CERTIFICATION
- CERTIFICATION OF NON-SEGREGATED FACILITIES
- NON-COLLUSION AFFIDAVIT
- DEBARMENT AND SUSPENSION CERTIFICATION
- PUBLIC CONTRACT CODE SECTION 10162 QUESTIONNAIRE
- PUBLIC CONTRACT CODE SECTION 10232 STATEMENT
- PUBLIC CONTRACT CODE SECTION 10285.1 STATEMENT
- NONLOBBYING CERTIFICATION FOR FEDERAL AID CONTRACTS
- DISCLOSURE OF LOBBYING ACTIVITIES

Revised 8/09

Bidder declares that he/she has read, and agrees to, the Special Provisions, including, without limitation, the provisions of Sections 1, 2, 3, 4, 5, 6, and 7 thereof.

Bidder understands that this Contract is subject to Part 26, Title 49, Code of Federal Regulations entitled "Participation By Disadvantaged Business Enterprise in Department of Transportation Financial Assistance Programs." Bidder further understands that the award of this Contract, if it be awarded, will be to the lowest responsible bidder whose proposal complies with all the requirements prescribed herein.

Bidder is fully informed respecting the requirements of Part 26, Title 49, of the Code of Federal Regulations, and has read and understands the Disadvantaged Business Enterprise (DBE) provisions set forth in Sections 2, 3, and 5 of the Special Provisions.

Bidder shall list the name and address of each subcontractor to whom the bidder proposes to directly subcontract portions of the work as required by the provisions in Section 2-1.02, "Required Listing of Proposed Subcontractors," of these Special Provisions. The list of subcontractors shall also set forth the portion of work that will be done by each subcontractor listed. The "DESIGNATION OF SUBCONTRACTORS" form for listing the subcontractors is included in the section titled "Bid Proposal and Forms" of the Contract Documents.

Accompanying this bid proposal is a bidder's bond, cash, cashier's check, or a certified check, payable to the County of San Luis Obispo, for the sum of _____ _____ Dollars ($_____), said amount being at least ten percent (10%) of the total of the bid.

A bidder's bond, cash, cashier's check, or a certified check accompanies this bid proposal as a guarantee. The proceeds thereof shall become the property of the County of San Luis Obispo if the proposal is withdrawn after the time fixed in the Notice to Bidders for the opening of bids, or if, in case this bid is accepted by said Board of Supervisors and such bidder has received notice that the contract has been awarded to him/her, the undersigned shall fail within ten (10) calendar days, not including Saturdays, Sundays, and legal holidays, thereafter to execute a contract with the County and furnish the certificates of insurance and bonds required by the Notice to Bidders and said Board of Supervisors. Otherwise, said guarantee, except a bidder's bond, will be returned to the undersigned. Revised 1/10

This bid proposal may be withdrawn, in writing, prior to the time fixed in the Notice to Bidders for the opening of bids. It is understood and agreed that this bid proposal will <u>not</u> be withdrawn after the time fixed in the Notice to Bidders for the opening of bids. Bidders further agree that the failure of the County to open bids for this project exactly at the time fixed in said Notice shall not extend the time within which bids may be withdrawn.

The undersigned bidder will sign and deliver to the County of San Luis Obispo the written contract, together with the certificates of insurance and bonds described in the Notice to Bidders, within ten (10) calendar days, not including Saturdays, Sundays, and legal holidays, after the undersigned has received notice that the contract has been awarded to him/her. Revised 1/10

The undersigned, as bidder, declares that he/she is aware of the provisions of Section 3700 of the California Labor Code which require every employer to be insured against liability for workers' compensation or to undertake self insurance in accordance with the provisions of that code, and will comply with such provisions before commencing the performance of the work of this contract.

The bidder's execution of the signature portion of this bid proposal shall also constitute an endorsement and execution of those certifications, questionnaires, and assurances which are a part of this proposal.

ADDENDA: The undersigned acknowledges and confirms the receipt of **Addenda Nos.**

Addenda Number	Date
_____	_____
_____	_____
_____	_____

and agrees that said addenda are covered in the bid proposal and shall form a part of the Contract Documents.

Revised 7/09

IMPORTANT NOTICE:

If bidder or other interested person is a corporation, state legal name of corporation, also names of the president, secretary, treasurer, and manager thereof; if a partnership, state true name of firm, also names of all individual co-partners composing firm; if bidder or other interested person is an individual, state first and last names in full.

_____

_____

Bidder warrants and represents that he/she is licensed in accordance with an Act providing for the registration of Contractors, License No. _____, Class _____, License Expiration Date _____. (Note: The successful bidder must possess the license classification specified in the Notice to Bidders upon award of this contract.)

Name of Bidder_____

Signature of Bidder_____

Printed Name and Title_____

Business Address_____

Telephone Number_____

Date_____

NOTICE. . . . . .If bidder is a corporation, the legal name of the corporation shall be set forth above together with the signature of the officer or officers authorized to sign contract in behalf of the corporation; if bidder is a partnership, the true name of the firm shall be set forth above together with the signature of the partner or partners authorized to sign contracts in behalf of the partnership; and if the bidder is an individual, his or her signature shall be placed above. If signature is by an agent, other than an officer of a corporation or a member of a partnership, a Power of Attorney must be on file with the County prior to opening of bids or submitted with the bid; otherwise, the bid will be disregarded as irregular and unauthorized.

RETURN THIS FORM WITH YOUR BID PROPOSAL

DESIGNATION OF SUBCONTRACTORS – BASE BID

In compliance with the provisions of Sections 4100 et seq of the Public Contract Code of the State of California, and any amendments thereto, the undersigned bidder sets forth the following:

a. The name and location of the place of business of each subcontractor who will perform work or labor, or render service to the undersigned Prime Contractor in or about the construction of the work or improvement, or a subcontractor licensed by the State of California who, under subcontract to the Prime Contractor, specially fabricates and installs a portion of the work or improvement according to detailed drawings contained in the plans and specifications, in an amount in excess of one-half of one percent of the undersigned Prime Contractor's total bid or in the case of bids for the construction of streets and highways, including bridges, in excess of one-half of one percent or ten thousand dollars ($10,000), whichever is greater.*

b. The portion of the work which will be done by each such subcontractor. Only one subcontractor shall be listed for each such portion.

Bid Schedule Item and description of each Subcontractor's Portion of Work	Subcontractor (including License No.)	Address	Approximate Dollar Value for each Subcontractor's Portion of Work

By: _____
(Bidder's Signature/Printed Name and Title/Company Name)

*NOTE: When there is a failure to list a subcontractor, as required, the law provides that the Contractor agrees to do the work with his or her own forces. In such case, bidder must be authorized to perform said work. Any bid not complying with the provisions hereof may be rejected.

RETURN THIS FORM WITH YOUR BID PROPOSAL

DESIGNATION OF SUBCONTRACTORS – ADDITIVE BID ITEM 1

In compliance with the provisions of Sections 4100 et seq of the Public Contract Code of the State of California, and any amendments thereto, the undersigned bidder sets forth the following:

a. The name and location of the place of business of each subcontractor who will perform work or labor, or render service to the undersigned Prime Contractor in or about the construction of the work or improvement, or a subcontractor licensed by the State of California who, under subcontract to the Prime Contractor, specially fabricates and installs a portion of the work or improvement according to detailed drawings contained in the plans and specifications, in an amount in excess of one-half of one percent of the undersigned Prime Contractor's total bid or in the case of bids for the construction of streets and highways, including bridges, in excess of one-half of one percent or ten thousand dollars ($10,000), whichever is greater.*

b. The portion of the work which will be done by each such subcontractor. Only one subcontractor shall be listed for each such portion.

Bid Schedule Item and description of each Subcontractor's Portion of Work	Subcontractor (including License No.)	Address	Approximate Dollar Value for each Subcontractor's Portion of Work

By: _____
(Bidder's Signature/Printed Name and Title/Company Name)

*NOTE: When there is a failure to list a subcontractor, as required, the law provides that the Contractor agrees to do the work with his or her own forces. In such case, bidder must be authorized to perform said work. Any bid not complying with the provisions hereof may be rejected.

RETURN THIS FORM WITH YOUR BID PROPOSAL

DESIGNATION OF SUBCONTRACTORS – ADDITIVE BID ITEM 2

In compliance with the provisions of Sections 4100 et seq of the Public Contract Code of the State of California, and any amendments thereto, the undersigned bidder sets forth the following:

a. The name and location of the place of business of each subcontractor who will perform work or labor, or render service to the undersigned Prime Contractor in or about the construction of the work or improvement, or a subcontractor licensed by the State of California who, under subcontract to the Prime Contractor, specially fabricates and installs a portion of the work or improvement according to detailed drawings contained in the plans and specifications, in an amount in excess of one-half of one percent of the undersigned Prime Contractor's total bid or in the case of bids for the construction of streets and highways, including bridges, in excess of one-half of one percent or ten thousand dollars ($10,000), whichever is greater.*

b. The portion of the work which will be done by each such subcontractor. Only one subcontractor shall be listed for each such portion.

Bid Schedule Item and description of each Subcontractor's Portion of Work	Subcontractor (including License No.)	Address	Approximate Dollar Value for each Subcontractor's Portion of Work

By: _____
(Bidder's Signature/Printed Name and Title/Company Name)

*NOTE: When there is a failure to list a subcontractor, as required, the law provides that the Contractor agrees to do the work with his or her own forces. In such case, bidder must be authorized to perform said work. Any bid not complying with the provisions hereof may be rejected.

RETURN THIS FORM WITH YOUR BID PROPOSAL

UDBE COMMITMENT – BASE BID

AGENCY: SAN LUIS OBISPO COUNTY - DEPT. OF PUBLIC WORKS LOCATION: _____

PROJECT DESCRIPTION: _____

TOTAL CONTRACT AMOUNT: $_____

BID DATE: _____

BIDDER'S NAME: _____

CONTRACT UDBE GOAL: _____

BID ITEM NUMBER	ITEM OF WORK AND DESCRIPTION OR SERVICES TO BE SUBCONTRACTED OR MATERIALS TO BE PROVIDED	CERT. NO. OF UDBE AND EXPIRATION DATE	NAME OF UDBEs (Must be certified on the date bids are opened - include UDBE address and phone number)	DOLLAR AMOUNT UDBE

For Local Agency to Complete:

Local Agency Contract Number: 300362

Federal Aid Project Number: SR2SF-5949(109)

Federal Share: _____

Contract Award Date: _____

Local Agency certifies that all information is complete and accurate.

Print Name _____ Signature _____ Date _____
Local Agency Representative

(Area Code) Telephone Number: _____

Total Claimed Participation $_____

_____%

Signature of Bidder _____

Date _____ (Area Code) Tel. No. _____

Person to Contact _____ (Please Type or Print)

For Caltrans Review:

Print Name _____ Signature _____ Date _____
Caltrans District Local Assistance Engineer

UDBE Commitment (Rev 8/09)

Distribution: (1) Copy - Fax or scan a copy immediately to the Caltrans District Local Assistance Engineer (DLAE) upon award
(2) Copy - Include in award package to Caltrans District Local Assistance
(3) Original - Local agency files

RETURN THIS FORM WITH YOUR BID PROPOSAL

UDBE COMMITMENT – BASE BID PLUS ADDITIVE ITEM 1

AGENCY: SAN LUIS OBISPO COUNTY - DEPT. OF PUBLIC WORKS LOCATION: _____

PROJECT DESCRIPTION: _____

TOTAL CONTRACT AMOUNT: $_____

BID DATE: _____

BIDDER'S NAME: _____

CONTRACT UDBE GOAL: _____

BID ITEM NUMBER	ITEM OF WORK AND DESCRIPTION OR SERVICES TO BE SUBCONTRACTED OR MATERIALS TO BE PROVIDED	CERT. NO. OF UDBE AND EXPIRATION DATE	NAME OF UDBEs (Must be certified on the date bids are opened - include UDBE address and phone number)	DOLLAR AMOUNT UDBE

For Local Agency to Complete:

Local Agency Contract Number: 300362

Federal Aid Project Number: SR2SF-5949(109)

Federal Share: _____

Contract Award Date: _____

Local Agency certifies that all information is complete and accurate.

Print Name _____ Signature _____ Date _____
Local Agency Representative

(Area Code) Telephone Number: _____

Total Claimed Participation $_____

_____%

Signature of Bidder _____

Date _____ (Area Code) Tel. No. _____

Person to Contact _____ (Please Type or Print)

For Caltrans Review:

Print Name _____ Signature _____ Date _____
Caltrans District Local Assistance Engineer

UDBE Commitment (Rev 8/09)

Distribution: (1) Copy - Fax or scan a copy immediately to the Caltrans District Local Assistance Engineer (DLAE) upon award
(2) Copy - Include in award package to Caltrans District Local Assistance
(3) Original - Local agency files

RETURN THIS FORM WITH YOUR BID PROPOSAL

UDBE COMMITMENT – BASE BID PLUS ADDITIVE ITEMS 1 & 2

AGENCY: SAN LUIS OBISPO COUNTY - DEPT. OF PUBLIC WORKS LOCATION: _____

PROJECT DESCRIPTION: _____

TOTAL CONTRACT AMOUNT: $_____

BID DATE: _____

BIDDER'S NAME: _____

CONTRACT UDBE GOAL: _____

BID ITEM NUMBER	ITEM OF WORK AND DESCRIPTION OR SERVICES TO BE SUBCONTRACTED OR MATERIALS TO BE PROVIDED	CERT. NO. OF UDBE AND EXPIRATION DATE	NAME OF UDBEs (Must be certified on the date bids are opened - include UDBE address and phone number)	DOLLAR AMOUNT UDBE

For Local Agency to Complete:

Local Agency Contract Number: 300362

Federal Aid Project Number: SR2SF-5949(109)

Federal Share: _____

Contract Award Date: _____

Local Agency certifies that all information is complete and accurate.

_____ _____ _____

Print Name Signature Date
Local Agency Representative

(Area Code) Telephone Number: _____

Total Claimed Participation $_____

_____%

_____
Signature of Bidder

_____
Date (Area Code) Tel. No.

_____
Person to Contact (Please Type or Print)

For Caltrans Review:

_____ _____ _____

Print Name Signature Date
Caltrans District Local Assistance Engineer

UDBE Commitment (Rev 8/09)

Distribution: (1) Copy - Fax or scan a copy immediately to the Caltrans District Local Assistance Engineer (DLAE) upon award
(2) Copy - Include in award package to Caltrans District Local Assistance
(3) Original - Local agency files

RETURN THIS FORM WITH YOUR BID PROPOSAL

UDBE INFORMATION - GOOD FAITH EFFORTS

Federal-aid Project No.: SR2SF-5949(109) Bid Opening Date: _____

Bidder's Name: _____

The County of San Luis Obispo established an Underutilized Disadvantaged Business Enterprise (UDBE) goal of 9% for this project. The information provided herein shows that a good faith effort was made.

Lowest, second lowest, and third lowest bidders shall submit the following information to document adequate good faith efforts. Bidders should submit the following information even if the "UDBE COMMITMENT" form indicates the bidder has met the UDBE goal. This will protect the bidder's eligibility for award of the contract if the County determines the bidder failed to meet the goal for various reasons, e.g., a UDBE firm was not certified at bid opening, or the bidder made a mathematical error. Submittal of only the "UDBE COMMITMENT" for may not provide sufficient documentation to demonstrate that adequate good faith efforts were made.

The following items are listed in Section 2-1.04B, "UDBE Good Faith Effort Submittal," of the Special Provisions:

A. The names and dates of each publication in which a request for UDBE participation for this project was placed by the bidder (please attach copies of advertisements or proofs of publication):

Publications	Dates of Advertisement

B. The names and dates of written notices sent to certified UDBEs soliciting bids for this project and the dates and methods used for following up initial solicitations to determine with certainty whether the UDBEs were interested (please attach copies of UDBE search results, solicitations, telephone records, fax confirmations, etc.):

Names of UDBEs Solicited	UDBE Certification Number	Method and Date of Initial Solicitation	Follow Up Methods and Dates	Results of Follow Up

C. The items of work which the bidder made available to UDBE firms, including, where appropriate, any breaking down of the contract work items (including those items normally performed by the bidder with its own forces) into economically feasible units to facilitate UDBE participation. It is the bidder's responsibility to demonstrate that sufficient work to facilitate UDBE participation was made available to UDBE firms.

Items of Work	Bidder Normally Performs Item (Y/N)	Breakdown of Items	Amount ($)	Percentage Of Contract

D. The names, addresses, and phone numbers of rejected UDBE firms, the reasons for the bidder's rejection of the UDBEs, the firms selected for that work (please attach copies of quotes from the firms involved), and the price difference for each UDBE if the selected firm is not a UDBE:

Item of Work	Name, address, and phone number of rejected UDBE	Reason for rejection of UDBE	Name, address, and phone number of selected firm	Price difference between UDBE and selected firm

E. Efforts made to assist interested UDBEs in obtaining bonding, lines of credit or insurance, and any technical assistance or information related to the plans, specifications and requirements for the work which was provided to UDBEs:

_____
_____
_____
_____
_____

F. Efforts made to assist interested UDBEs in obtaining necessary equipment, supplies, materials, or related assistance or services, excluding supplies and equipment the UDBE subcontractor purchases or leases from the prime contractor or its affiliate:

_____
_____
_____
_____
_____

G. The names of agencies, organizations or groups contacted to provide assistance in contacting, recruiting and using UDBE firms (please attach copies of requests to agencies and any responses received, i.e., lists, Internet page download, etc.):

Name of Agency/Organization	Method/Date of Contact	Results

H. Any additional data to support a demonstration of good faith efforts (use additional sheets if necessary):

_____
_____
_____
_____
_____

By: _____
(Bidder's Signature/Printed Name and Title/Company Name)

Revised 8/09

NOTE: USE ADDITIONAL SHEETS OF PAPER IF NECESSARY.

BIDDER'S LIST OF SUBCONTRACTORS (DBE and NON-DBE)

The bidder shall list all subcontractors, subconsultants, and suppliers (both DBE and non-DBE) who supplied bids or quoted for this project, in accordance with Section 2-1.054 of the Standard Specifications and per Title 49, Section 26.11 of the Code of Federal Regulations. This listing is required in addition to listing subcontractors elsewhere in the proposal. Photocopy this form for additional firms.

Are all subcontractors/subconsultants/supplier bids (quotes) received by your firm for this Project listed below? ☐ YES ☐ NO

Name of Firm Submitting Bid/Quote	Phone/ Fax	Description of Work Items	Certified DBE?	Firm Being Used?
1.	*Phone* *Fax*		☐ YES ☐ NO *If YES list DBE #:*	☐ YES ☐ NO
2.	*Phone* *Fax*		☐ YES ☐ NO *If YES list DBE #:*	☐ YES ☐ NO
3.	*Phone* *Fax*		☐ YES ☐ NO *If YES list DBE #:*	☐ YES ☐ NO
4.	*Phone* *Fax*		☐ YES ☐ NO *If YES list DBE #:*	☐ YES ☐ NO
5.	*Phone* *Fax*		☐ YES ☐ NO *If YES list DBE #:*	☐ YES ☐ NO

Distribution: 1) Original – Local Agency File

RETURN THIS FORM WITH YOUR BID PROPOSAL

BIDDER'S LIST OF SUBCONTRACTORS (DBE and NON-DBE) continued

Name of Firm Submitting Bid/Quote	Phone/ Fax	Description of Work Items	Certified DBE?	Firm Being Used?
6.	*Phone* *Fax*		☐ YES ☐ NO *If YES list DBE #:*	☐ YES ☐ NO
7.	*Phone* *Fax*		☐ YES ☐ NO *If YES list DBE #:*	☐ YES ☐ NO
8.	*Phone* *Fax*		☐ YES ☐ NO *If YES list DBE #:*	☐ YES ☐ NO
9.	*Phone* *Fax*		☐ YES ☐ NO *If YES list DBE #:*	☐ YES ☐ NO
10.	*Phone* *Fax*		☐ YES ☐ NO *If YES list DBE #:*	☐ YES ☐ NO
11.	*Phone* *Fax*		☐ YES ☐ NO *If YES list DBE #:*	☐ YES ☐ NO

By:

(Bidder's Signature/Printed Name and Title/Company Name)

Distribution: 1) Original – Local Agency File

RETURN THIS FORM WITH YOUR BID PROPOSAL

EQUAL EMPLOYMENT OPPORTUNITY CERTIFICATION

The bidder_____, proposed subcontractor_____, hereby certifies that they have ___, have not___, participated in a previous contract or subcontract subject to the equal opportunity clauses, as required by Executive Orders 10925, 11114, or 11246, and that, where required, has filed with the Joint Reporting Committee, the Director of the Office of Federal Contract Compliance, a Federal Government contracting or administering agency, or the former President's Committee on Equal Employment Opportunity, all reports due under the applicable filling requirements.

_____
(Name of Company)

By: _____

_____
Printed Name

_____
Title

Date: _____

Note: The above certification is required by the Equal Employment Opportunity Regulations of the Secretary of Labor (41 CFR 60-1.7(b)(1)), and must be submitted by bidders and proposed subcontractors only in connection with contracts and subcontracts which are subject to the equal opportunity clause. Contracts and subcontracts which are exempt from the equal opportunity clause are set forth in 41 CFR 60-1.5. (Generally only contracts or subcontracts of $10,000 or under are exempt).

Currently, Standard Form 100 (EEO-1) is the only report required by Executive Orders or their implementing regulations.

Proposed prime contractors and subcontractors who have participated in a previous contract or subcontract subject to the Executive Orders and have not filled out the required reports should note that 41 CFR 60-1.7(b)(1) prevents the award of contracts and subcontracts unless such contractor submits a report covering the delinquent period or such other period specified by the Federal Highway Administration or by the Director, Office of Federal Contract Compliance, U.S. Department of Labor.

RETURN THIS FORM WITH YOUR BID PROPOSAL

CERTIFICATION OF NON-SEGREGATED FACILITIES
FEDERALLY ASSISTED PROJECTS

The federally assisted construction contractor certifies that he/she does not maintain or provide for his/her employees any segregated facilities at any of his/her establishments, and that he/she does not permit his/her employees to perform their services at any location, under his/her control, where segregated facilities are maintained. The federally assisted construction contractor certifies further that he/she will not maintain or provide for his/her employees any segregated facilities at any of his/her establishments, and that he/she will not permit his/her employees to perform their services at any location, under his/her control, where segregated facilities are maintained. The federally assisted construction contractor agrees that a breach of this certification is a violation of the Equal Opportunity clause in this contract. As used in this certification, the term "segregated facilities" means any waiting rooms, work areas, restrooms and washrooms, restaurants and other eating areas, timeclocks, locker rooms and other storage or dressing areas, parking lots, drinking fountains, recreation or entertainment areas, transportation, and housing facilities provided for employees which are segregated by explicit directive or are in fact segregated on the basis of race, creed, color, or national origin, because of habit, local custom, or otherwise. The federally assisted construction contractor agrees that (except where he/she has obtained identical certifications from proposed subcontractors for specific time periods) he/she will obtain identical certifications from proposed subcontractors prior to the award of subcontracts exceeding $10,000 which are not exempt from the provisions of the Equal Opportunity clause, and that he/she will retain such certifications in his/her files.

NOTE: The penalty for making false statements in offers is prescribed in 18 U.S.C. 1001.

Company: _____

By: _____

Printed Name: _____

Title: _____

Date: _____

RETURN THIS FORM WITH YOUR BID PROPOSAL

NONCOLLUSION AFFIDAVIT

(Title 23 United States Code Section 112 and Public Contract Code Section 7106)

In accordance with Title 23 United States Code Section 112 and California Public Contract Code Section 7106, the bidder hereby declares, under penalty of perjury, that the bid is not made in the interest of, or on behalf of, any undisclosed person, partnership, company, association, organization, or corporation; that the bid is genuine and not collusive or sham; that the bidder has not directly or indirectly induced or solicited any other bidder to put in a false or sham bid, and has not directly or indirectly colluded, conspired, connived, or agreed with any bidder or anyone else to put in a sham bid, or that anyone shall refrain from bidding; that the bidder has not in any manner, directly or indirectly, sought by agreement, communication, or conference with anyone to fix the bid price of the bidder or any other bidder, or to fix any overhead, profit, or cost element of the bid price, or of that of any other bidder, or to secure any advantage against the public body awarding the contract of anyone interested in the proposed contract; that all statements contained in the bid are true; and, further, that the bidder has not, directly or indirectly, submitted his or her bid price or any other breakdown thereof, or the contents thereof, or divulged information or data relative thereto, or paid, and will not pay, any fee to any corporation, partnership, company, association, organization, bid depository, or to any member or agent thereto to effectuate a collusive or sham bid.

I declare under penalty of perjury under the laws of the State of California that the foregoing is true and correct.

_____
(Name of Company)

By: _____

_____
Printed Name

_____
Title

Date: _____

RETURN THIS FORM WITH YOUR BID PROPOSAL

DEBARMENT AND SUSPENSION CERTIFICATION

TITLE 49, CODE OF FEDERAL REGULATIONS, PART 29

The bidder, under penalty of perjury, certifies that, except as noted below, he/she or any other person associated therewith in the capacity of owner, partner, director, officer, manager:

- Is not currently under suspension, debarment, voluntary exclusion, or determination of ineligibility by any federal agency;
- Has not been suspended, debarred, voluntarily excluded or determined ineligible by any federal agency within the past 3 years;
- Does not have a proposed debarment pending; and
- Has not been indicted, convicted, or had a civil judgment rendered against it by a court of competent jurisdiction in any manner involving fraud of official misconduct within the past 3 years.

If there are any exceptions to this certification, insert the exceptions below. Exceptions will not necessarily result in denial of award, but will be considered in determining bidder responsibility. For any exception noted, indicate to whom it applies, the initiating agency, and dates of action.

_____

_____

_____

_____

_____

_____

_____
(Name of Company)

By: _____

_____
Printed Name

_____
Title

Date: _____

RETURN THIS FORM WITH YOUR BID PROPOSAL

PUBLIC CONTRACT CODE SECTION 10162 QUESTIONNAIRE

In conformance with Public Contract Code Section 10162, the Bidder shall complete, under penalty of perjury, the following questionnaire:

Has the bidder, any officer of the bidder, or any employee of the bidder who has a proprietary interest in the bidder, ever been disqualified, removed, or otherwise prevented from bidding on, or completing a federal, state, or local government project because of a violation of law or a safety regulation?

Yes _____ No _____

If the answer is yes, explain the circumstances in the following space.

_____
_____
_____
_____
_____
_____
_____
_____
_____
_____

I declare under penalty of perjury under the laws of the State of California that the foregoing is true and correct.

_____
(Name of Company)

By: _____

_____
Printed Name

_____
Title

Date: _____

RETURN THIS FORM WITH YOUR BID PROPOSAL

PUBLIC CONTRACT CODE SECTION 10232 STATEMENT

In accordance with Public Contract Code Section 10232, the Contractor, hereby states under penalty of perjury, that no more than one final unappealable finding of contempt of court by a federal court has been issued against the Contractor within the immediately preceding two-year period because of the Contractor's failure to comply with an order of a federal court which orders the Contractor to comply with an order of the National Labor Relations Board.

I declare under penalty of perjury under the laws of the State of California that the foregoing is true and correct:

_____
(Name of Company)

By: _____

_____
Printed Name

_____
Title

Date: _____

RETURN THIS FORM WITH YOUR BID PROPOSAL

PUBLIC CONTRACT CODE SECTION 10285.1 STATEMENT

In conformance with Public Contract Code Section 10285.1 (Chapter 376, Stats. 1985), the bidder hereby declares under penalty of perjury under the laws of the State of California that the bidder has ____, has not ____ been convicted within the preceding three years of any offenses referred to in that section, including any charge of fraud, bribery, collusion, conspiracy, or any other act in violation of any state or Federal antitrust law in connection with the bidding upon, award of, or performance of, any public works contract, as defined in Public Contract Code Section 1101, with any public entity, as defined in Public Contract Code Section 1100, including the Regents of the University of California or the Trustees of the California State University. The term "bidder" is understood to include any partner, member, officer, director, responsible managing officer, or responsible managing employee thereof, as referred to in Section 10285.1.

Note: The bidder must place a check mark after "has" or "has not" in one of the blank spaces provided.

Bidders are cautioned that making a false certification may subject the certifier to criminal prosecution.

I declare under penalty of perjury under the laws of the State of California that the foregoing is true and correct:

_____
(Name of Company)

By: _____

_____
Printed Name

_____
Title

Date: _____

RETURN THIS FORM WITH YOUR BID PROPOSAL

NON-LOBBYING CERTIFICATION FOR FEDERAL AID CONTRACTS

The prospective participant certifies, by signing and submitting their bid proposal, to the best of his or her knowledge and belief, that:

(1) No Federal appropriated funds have been paid or will be paid, by or on behalf of the undersigned, to any person for influencing or attempting to influence an officer or employee of any Federal agency, a Member of congress, an officer or employee of Congress, or an employee of a Member of Congress in connection with the awarding of any Federal contract, the making of any Federal grant, the making of any Federal loan, the entering into of any cooperative agreement, and the extension, continuation, renewal, amendment, or modification of any Federal contract, grant, loan, or cooperative agreement.

(2) If any funds other than Federal appropriated funds have been paid or will be paid to any person for influencing or attempting to influence an officer or employee of any Federal agency, a Member of Congress, an officer or employee of Congress, or an employee of a Member of Congress in connection with this Federal contract, grant, loan, or cooperative agreement, the undersigned shall complete and submit Standard Form-LLL, "Disclosure of Lobbying Activities," in accordance with its instructions.

This certification is a material representation of fact upon which reliance was placed when this transaction was made or entered into. Submission of this certification is a prerequisite for making or entering into this transaction imposed by Section 1352, Title 31, U.S. Code. Any person who fails to file the required certification shall be subject to a civil penalty of not less than $10,000 and not more than $100,000 for each such failure.

The prospective participant also agrees by submitting his or her bid or proposal that he or she shall require that the language of this certification be included in all lower tier subcontracts, which exceed $100,000 and that all such subrecipients shall certify and disclose accordingly.

DISCLOSURE OF LOBBYING ACTIVITIES

COMPLETE THIS FORM TO DISCLOSE LOBBYING ACTIVITIES PURSUANT TO 31 U.S.C. 1352

1. Type of Federal Action:

☐ a. contract
b. grant
c. cooperative agreement
d. loan
e. loan guarantee
f. loan insurance

2. Status of Federal Action:

☐ a. bid/offer/application
b. initial award
c. post-award

3. Report Type:

☐ a. initial
b. material change

For Material Change Only:
year ____ quarter _____
date of last report _____

4. Name and Address of Reporting Entity

☐ Prime ☐ Subawardee
Tier_____ , if known

Congressional District, if known

5. If Reporting Entity in No. 4 is Subawardee, Enter Name and Address of Prime:

Congressional District, if known

6. Federal Department/Agency:

7. Federal Program Name/Description:

CFDA Number, if applicable _____

8. Federal Action Number, if known:

9. Award Amount, if known:

10. a. Name and Address of Lobby Entity
(If individual, last name, first name, MI)

b. Individuals Performing Services (including address if different from No. 10a)
(last name, first name, MI)

(attach Continuation Sheet(s) if necessary)

11. Amount of Payment (check all that apply)

$ _____ ☐ actual ☐ planned

12. Form of Payment (check all that apply):

☐ a. cash
☐ b. in-kind; specify: nature _____
value _____

13. Type of Payment (check all that apply)

☐ a. retainer
☐ b. one-time fee
☐ c. commission
☐ d. contingent fee
☐ e deferred
☐ f. other, specify _____

14. Brief Description of Services Performed or to be performed and Date(s) of Service, including officer(s), employee(s), or member(s) contacted, for Payment Indicated in Item 11:

(attach Continuation Sheet(s) if necessary)

15. Continuation Sheet(s) attached: **Yes** ☐ **No** ☐

16. Information requested through this form is authorized by Title 31 U.S.C. Section 1352. This disclosure of lobbying reliance was placed by the tier above when his transaction was made or entered into. This disclosure is required pursuant to 31 U.S.C. 1352. This information will be reported to Congress semiannually and will be available for public inspection. Any person who fails to file the required disclosure shall be subject to a civil penalty of not less than $10,000 and not more than $100,000 for each such failure.

Signature: _____

Print Name: _____

Title: _____

Telephone No.: _____ Date: _____

Authorized for Local Reproduction
Standard Form - LLL

Federal Use Only:

Standard Form LLL Rev. 09-12-97

INSTRUCTIONS FOR COMPLETION OF SF-LLL, DISCLOSURE OF LOBBYING ACTIVITIES

This disclosure form shall be completed by the reporting entity, whether subawardee or prime Federal recipient, at the initiation or receipt of covered Federal action or a material change to previous filing pursuant to title 31 U.S.C. section 1352. The filing of a form is required for such payment or agreement to make payment to lobbying entity for influencing or attempting to influence an officer or employee of any agency, a Member of Congress an officer or employee of Congress or an employee of a Member of Congress in connection with a covered Federal action. Attach a continuation sheet for additional information if the space on the form is inadequate. Complete all items that apply for both the initial filing and material change report. Refer to the implementing guidance published by the Office of Management and Budget for additional information.

1. Identify the type of covered Federal action for which lobbying activity is and/or has been secured to influence, the outcome of a covered Federal action.
2. Identify the status of the covered Federal action.
3. Identify the appropriate classification of this report. If this is a follow-up report caused by a material change to the information previously reported, enter the year and quarter in which the change occurred. Enter the date of the last, previously submitted report by this reporting entity for this covered Federal action.
4. Enter the full name, address, city, state and zip code of the reporting entity. Include Congressional District if known. Check the appropriate classification of the reporting entity that designates if it is or expects to be a prime or subaward recipient. Identify the tier of the subawardee, e.g., the first subawardee of the prime is the first tier. Subawards include but are not limited to subcontracts, subgrants and contract awards under grants.
5. If the organization filing the report in Item 4 checks "Subawardee" then enter the full name, address, city, state and zip code of the prime Federal recipient. Include Congressional District, if known.
6. Enter the name of the Federal agency making the award or loan commitment. Include at least one organization level below agency name, if known. For example, Department of Transportation, United States Coast Guard.
7. Enter the Federal program name or description for the covered Federal action (item 1). If known, enter the full Catalog of Federal Domestic Assistance (CFDA) number for grants, cooperative agreements, loans and loan commitments.
8. Enter the most appropriate Federal identifying number available for the Federal action identification in item 1 (e.g., Request for Proposal (RFP) number, Invitation for Bid (IFB) number, grant announcement number, the contract grant. or loan award number, the application/proposal control number assigned by the Federal agency). Include prefixes, e.g., "RFP-DE-90-001."
9. For a covered Federal action where there has been an award or loan commitment by the Federal agency, enter the Federal amount of the award/loan commitments for the prime entity identified in item 4 or 5.
10. (a) Enter the full name, address, city, state and zip code of the lobbying entity engaged by the reporting entity identified in item 4 to influenced the covered Federal action.
    (b) Enter the full names of the individual(s) performing services and include full address if different from 10 (c). Enter Last Name, First Name and Middle Initial (MI).
11. Enter the amount of compensation paid or reasonably expected to be paid by the reporting entity (item 4) to the lobbying entity (item 10). Indicate whether the payment has been made (actual) or will be made (planned). Check all boxes that apply. If this is a material change report, enter the cumulative amount of payment made or planned to be made.
12. Check the appropriate box(es). Check all boxes that apply. If payment is made through an in-kind contribution, specify the nature and value of the in-kind payment.
13. Check the appropriate box(es). Check all boxes that apply. If other, specify nature.
14. Provide a specific and detailed description of the services that the lobbyist has performed or will be expected to perform and the date(s) of any services rendered. Include all preparatory and related activity not just time spent in actual contact with Federal officials. Identify the Federal officer(s) or employee(s) contacted or the officer(s) employee(s) or Member(s) of Congress that were contacted.
15. Check whether or not a continuation sheet(s) is attached.
16. The certifying official shall sign and date the form; print his/her name title and telephone number.

Public reporting burden for this collection of information is estimated to average 30 minutes per response, including time for reviewing instruction, searching existing data sources, gathering and maintaining the data needed, and completing and reviewing the collection of information. Send comments regarding the burden estimate or any other aspect of this collection of information, including suggestions for reducing this burden, to the Office of Management and Budget, Paperwork Reduction Project (0348-0046), Washington, D.C. 20503.

BIDDER'S BOND

KNOW ALL BY THESE PRESENTS:

That we, _____

_____

as Principal, and _____

_____,

as Surety, are held and firmly bound unto the County of San Luis Obispo, State of California (hereinafter called "County") in the penal sum of Ten Percent (10%) of the total aggregate amount of the bid of the Principal above named, submitted by said Principal to the County for the work described below, for the payment of which sum in lawful money of the United States, well and truly to be made, we bind ourselves, our heirs, executors, administrators and successors, jointly and severally, firmly by these presents. In no case shall the liability of the Surety hereunder exceed the sum of _____

_____ ($_____).

THE CONDITION OF THIS OBLIGATION IS SUCH,

That whereas a bid to County for certain construction specifically described as follows, for which bids are to be opened on _____, 20____, has been submitted by Principal to County for:

SAFE ROUTES TO SCHOOL IMPROVEMETNS
ON BEECHNUT AVENUE, THOMPSON AVENUE,
AND PRICE STREET, NIPOMO, CA
CONTRACT NO. 300362
FEDERAL NO. SR2SF-5949(109)

Bidder's Bond

NOW, THEREFORE, the penal sum guaranteed by this bond shall be forfeited to the County in the event of any of the following:

(1) The aforesaid Principal withdraws said bid after the time fixed in the Notice of Bidders for the opening of bids; or,

(2) Principal fails to provide the County within the time(s) specified in the aforesaid contract documents all of the completed UDBE documents required to perfect the Principal's bid before the contract is awarded; or

(3) Principal fails, within fifteen (15) calendar days after receipt of written notice that the contract has been awarded to Principal, to, enter into a written contract with County, in the prescribed form, in accordance with the bid as accepted, and file with the County the certificates of insurance as stipulated in Article 7 of the Agreement and the two bonds (in the prescribed forms), one to guarantee faithful performance and the other to guarantee payment for labor and materials. Revised 8/09

Surety, for value received, hereby stipulates and agrees that no change, extension of time, alteration or addition to the terms of said contract or to the work to be performed thereunder or the specifications accompanying the same shall in any manner affect its obligations on this bond, and it does hereby waive notice of any such change, extension, alteration, or addition.

In the event suit is brought upon said bond by County and judgment is recovered, the Surety shall pay all costs incurred by County in such suit, including a reasonable attorney's fee to be fixed by the court. Death of the Principal shall not relieve Surety of its obligations hereunder.

IN WITNESS WHEREOF, we have hereunto set our hands and seals on this _____ day of_____, 20____.

_____ (Seal)

_____ (Seal)

_____ (Seal)
Principal

_____ (Seal)

_____ (Seal)

_____ (Seal)
Surety

_____

_____
Address

NOTE:

Signatures of those executing for Surety must be properly acknowledged.

Bidder's Bond

COUNTY OF SAN LUIS OBISPO
DEPARTMENT OF PUBLIC WORKS AND TRANSPORTATION

AGREEMENT

FOR

SAFE ROUTES TO SCHOOL IMPROVEMETNS
ON BEECHNUT AVENUE, THOMPSON AVENUE,
AND PRICE STREET, NIPOMO, CA
CONTRACT NO. 300362
FEDERAL NO. SR2SF-5949(109)

COUNTY OF SAN LUIS OBISPO

AGREEMENT

THIS AGREEMENT, made and entered into this _____ day of _____, 20_____, between the County of San Luis Obispo, a political subdivision and county of the State of California, party of the first part, hereinafter called "County" and _____ _____ the party of the second part, hereinafter called "Contractor".

WITNESSETH, that for and in consideration of the mutual covenants and agreements hereinafter contained, the parties hereto agree as follows:

ARTICLE 1. That the Contractor will, at its own proper cost and expense, do all the work and furnish all the equipment and materials necessary to construct and complete in good and workmanlike manner to the satisfaction of the Board of Supervisors of said County, for

SAFE ROUTES TO SCHOOL IMPROVEMETNS
ON BEECHNUT AVENUE, THOMPSON AVENUE,
AND PRICE STREET, NIPOMO, CA
CONTRACT NO. 300362
FEDERAL NO. SR2SF-5949(109)

all in strict accordance with the Contract Documents, including without limitation, the Project Plans, the Standard Specifications of the State of California, Department of Transportation, dated May 2006 (hereinafter called, "Standard Specifications"), the Standard Plans of the State of California, Department of Transportation, dated May 2006 (hereinafter called, "Standard Plans"), and the Special Provisions therefor, on file in the Department of Public Works and Transportation and the Office of the Clerk of the Board of Supervisors of the County of San Luis Obispo, State of California.

ARTICLE 2. This Agreement, together with the Notice and Instructions to Bidders, Bid Proposal and Forms, Standard Specifications, Standard Plans, the Special Provisions, including without limitation the Project Plans incorporated therein, and all addenda thereto, form the contract, and said documents by this reference become as fully a part of this Agreement as if set forth in full and are herein sometimes referred to as "Contract" or as "Contract Documents". The terms set forth below, when utilized in said documents, shall mean as follows: Revised 9/09

PUBLIC WORKS DIRECTOR: Means the Director of Public Works and Transportation (hereinafter, also the Department of Public Works) of the County of San Luis Obispo, State of California, acting either directly or through properly authorized agent(s), acting within the scope of the particular duties delegated to them, including registered engineers employed by the Department of Public Works and Transportation.

COUNTY CLERK: Means the Clerk of the Board of Supervisors of the County of San Luis Obispo, State of California.

ARTICLE 3. The Contractor shall begin work within ten (10) calendar days, not including Saturdays, Sundays, or legal holidays, from the date of receipt of County's Notice to Contractor to Proceed, and the work to be accomplished under this contract shall be completed within the time limit provided in Section 4, "Prosecution and Progress of the Work", of the Special Provisions. Attention is directed to the provisions of said Section 4, "Prosecution and Progress of the Work", of the Special Provisions for the amount of liquidated damages. Revised 9/09

ARTICLE 4. The total Contract price is the amount of the Contractor's bid as set forth in the award of the Contract approved by the County's Board of Supervisors. The Contractor will receive and accept and the County will pay the prices specified in the attached Bid Proposal, which is incorporated herein by reference, as full compensation for furnishing all labor, materials, and equipment for doing all the work contemplated and embraced in this Agreement. To the extent permitted by law, the Contractor assumes during the progress of the work and before its acceptance, any and all loss or damage arising out of the nature of the work aforesaid or from the action of the elements, or from any unforeseen difficulties or obstructions which may arise or be encountered in the prosecution of the work until its acceptance by the County; and assumes any and all expenses incurred by or in consequence of the suspension or discontinuance of work, for well and faithfully completing the work, and the whole thereof, in the manner and to the requirements of the Plans, Special Provisions, Standard Specifications, Standard Plans, and the Public Works Director. Revised 10/09

ARTICLE 5. The Contractor's attention is directed to the provisions of Section 2-1.02, "Required Listing of Proposed Subcontractors," of the Special Provisions and the requirements contained therein.

Additionally, the Contractor's attention is directed to the provisions of the "Subletting and Subcontracting Fair Practices Act" set forth in Sections 4100-4114 of the Public Contract Code.

ARTICLE 6. The Contractor agrees that the Public Works Director shall decide as to the meaning of the Standard Specifications, Standard Plans, and Special Provisions for the work, including without limitation the Project Plans incorporated therein, where the same may be found to be obscure or in dispute and the decision shall be final. The Public Works Director shall have the right to correct any errors or omissions therein when such corrections are necessary to the proper fulfillment of the intention of the Special Provisions, Standard Specifications and Standard Plans; the action of such corrections is to take effect from the time said Public Works Director gives notice thereof to the Contractor.

ARTICLE 7. The County of San Luis Obispo, its officers, employees, volunteers, and agents shall be added as additional insureds with respect to all liabilities arising out of Contractor's performance of any and all work under this Agreement (CGL & BAL). Revised 9/09

(a) **MINIMUM SCOPE AND LIMITS OF REQUIRED INSURANCE POLICIES**

The following policies shall be maintained with insurers authorized to do business in the State of California and shall be issued under forms of policies satisfactory to the County.

1. **COMMERCIAL GENERAL LIABILITY INSURANCE POLICY ("CGL")**

Policy shall include coverage at least as broad as set forth in Insurance Services Office (herein "ISO") Commercial General Liability coverage. (Occurrence Form CG 0001) with policy limits not less than the following:

$1,000,000 each occurrence (combined single limit);
$1,000,000 for personal injury liability;
$1,000,000 aggregate for products-completed operations; and,
$1,000,000 general aggregate.

The general aggregate limits shall apply separately to Contractor's work under this Agreement.

2. **BUSINESS AUTOMOBILE LIABILITY POLICY ("BAL")**

Policy shall include coverage at least as broad as set forth in the liability section of Insurance Services Office Business Auto Coverage (CA 00 01) with policy limits of no less than $1 million dollars combined single limit for each occurrence. Said insurance shall include coverage for owned, non-owned, and hired vehicles. Policy shall be endorsed with the following specific language or contain equivalent language in the policy:

i. The County of San Luis Obispo, its officers and employees, is named as an additional insured for all liability arising out of the operations by or on behalf of the named insured in the performance of this Agreement.

ii. The policy shall not be cancelled or materially changed without first giving thirty days prior written notice to the County of San Luis Obispo, Department of Public Works. Revised 5/10

3. **WORKERS' COMPENSATION AND EMPLOYERS' LIABILITY INSURANCE POLICY ("WC/EL")**

This policy shall include at least the following coverages and policy limits:

i. Workers' Compensation insurance as required by the laws of the State of California; and

ii. Employer's Liability Insurance Coverage B with coverage amounts not less than one million ($1,000,000) dollars each accident/Bodily Injury

(herein "BI"); one million ($1,000,000) dollars policy limit BI by disease; and, one million ($1,000,00) dollars each employee BI by disease.

(b) **DEDUCTIBLES AND SELF-INSURANCE RETENTIONS**

Any deductibles and/or self-insured retentions which apply to any of the insurance policies referred to above shall be declared in writing by Contractor and approved by the County before work is begun pursuant to this Agreement. At the option of the County, Contractor shall either reduce or eliminate such deductibles or self-insured retentions as respect to the County, its officers, employees, volunteers, and agents, or shall provide a financial guarantee satisfactory to the County guaranteeing payment of losses and related investigations, claim administration, and/or defense expenses.

(c) **ENDORSEMENTS**

All of the following clauses and endorsements, or similar provisions, are required to be made a part of insurance policies indicated in parentheses below:

i. A "Cross Liability", "Severability of Interest" or "Separation of Insureds" clause (CGL & BAL);

ii. The County of San Luis Obispo, its officers, employees, volunteers, and agents shall be added as additional insureds with respect to all liabilities arising out of Contractor's performance of any and all work under this Agreement (CGL & BAL); Revised 9/09

iii. If the insurance policy covers an "accident" basis, it must be changed to "occurrence" (CGL & BAL);

iv. This policy shall be considered primary insurance with respect to any other valid and collectible insurance County may possess, including any self-insured retention County may have, and any other insurance County does possess shall be considered excess insurance only and shall not be called upon to contribute to this insurance (CGL & BAL);

v. No cancellation or non-renewal of this policy, or reduction of coverage afforded under the policy, shall be effective until written notice has been given at least thirty (30) days prior to the effective date of such reduction or cancellation to the Department of Public Works, Room 207, County Government Center, San Luis Obispo, CA 93408, Attention Design Engineer, Contract No. 300362 (CGL & WC/EL);

vi. Contractor and its insurers shall agree to waive all rights of subrogation against the County, its officers, employees, volunteers, and agents for any loss arising under this Agreement (CGL); and

vii. Deductibles and self-insured retentions must be declared (All Policies)

(d) **ABSENCE OF INSURANCE COVERAGE**

County may direct Contractor to immediately cease all activities with respect to this Agreement if it determines that Contractor fails to carry, in full force and affect, all insurance policies with coverages at or above the limits specified in this Agreement. Any delays or expense caused due to stopping of work and change of insurance shall be considered Contractor's delay and expense. At the County's discretion, under conditions of lapse, the County may purchase appropriate insurance and charge all costs related to such policy to Contractor.

(e) **PROOF OF INSURANCE COVERAGE AND COVERAGE VERIFICATION**

The following requirements apply to all insurance to be provided by Contractor.

i. Upon written request by the County, Contractor shall provide all required certificates of insurance coverage to the County within ten (10) working days. All certificates of insurance shall be furnished to County at the time of the execution of this Contract. Failure to provide the required certificates of insurance shall be deemed a non-waivable, material breach of this Contract which shall relieve the County of any obligation to make any payment(s) to the Contractor related to any performance made pursuant to this Contract. Such breach cannot be waived by the County's execution of this Contract, or by any other conduct of the County.

ii. After the execution of this Contract, Contractor shall annually provide County a current copy of a Certificate of Insurance, on an Accord or similar form, which includes complete policy coverage verification, as evidence of the stipulated coverages.

iii. All of the insurance companies providing insurance for Contractor shall have, and provide evidence of, a Best Rating Service rate of A VI or above. The Certificate of Insurance and coverage verification and all other notices related to cancellation or non-renewal shall be mailed to the Department of Public Works, Room 207, County Government Center, CA 93408, Attention Design Engineer, Contract No. 300362.

iv. The furnishing of the required certificates of the insurance to the County shall not relieve or decrease the extent to which the Contractor may be held responsible for payment of damages resulting from any liability of the Contractor related to this Contract.

v. If Contractor fails or refuses to procure or to maintain the insurance required by this Article, or fails or refuses to furnish, within the time limitations specified in the Contract Documents, the required certificates of insurance, or the insurance policies, if demanded, County shall have the right to forthwith terminate this Contract.

vi. The minimum limits of insurance liability specified herein shall supersede and replace those minimum limits set forth in Section 7-1.12B of the Standard Specifications.

vii. Contractor shall not allow any subcontractor to commence work until the insurance required of the subcontractor has been obtained.

(f) The parties expressly agree that the indemnification and insurance clauses in this Contract are an integral part of the performance exchanged in this Contract. The compensation stated in this Contract includes compensation for the risks transferred to Contractor by the indemnification and insurance clauses.

ARTICLE 8. Contractor shall defend, indemnify, and hold harmless the County, its officers, and employees from all claims, demands, damages, costs, expenses, judgments, attorney fees, liabilities, or other losses that may be asserted by any person or entity, and that arise out of or are made in connection with the acts or omissions relating to the performance of any duty, obligation, or work hereunder. The obligation to indemnify shall be effective and shall extend to all such claims and losses, in their entirety, even when such claims or losses arise from the comparative negligence of the County its officers and employees. However, this indemnity will not extend to any claims or losses arising out of the sole negligence or willful misconduct of the County, its officers and employees.

The preceding paragraph applies to any theory of recovery relating to said act or omission by the Contractor, or its agents, employees, or other independent contractors directly responsible to Contractor, including, but not limited to the following:

1. Violation of statute.

2. Professional malpractice.

3. Willful, intentional or other wrongful acts, or failures to act.

4. Negligence or recklessness.

5. Furnishing of defective or dangerous products.

6. Broad Form Property Damage (Including Completed Operations).
7. Premises Liability.

8. Strict Liability.

9. Inverse condemnation.

10. Violation of civil rights

11. Violation of any federal or state stature, regulation, or ruling resulting in a determination by the Internal Revenue Service, California Franchise Tax Board, or any other California entity responsible for collecting payroll taxes, when the Contractor is not an independent contractor.

Nothing contained in the foregoing indemnity provisions shall be construed to require the Contractor to indemnify the County, against any responsibility or liability in contravention of Civil Code 2782.

It is the intent of the parties to provide the County the fullest indemnification, defense, and "hold harmless" rights allowed under the law. If any word(s) contained herein are deemed by a court to be in contravention of applicable law, said word(s) shall be severed from this contract and the remaining language shall be given full force and effect.

ARTICLE 9. It is further stipulated and agreed that the Contractor shall keep himself/herself fully informed of all laws, ordinances, and regulations which do or may affect the conduct of the work, the materials used therein or persons engaged or employed thereupon and all such orders of bodies and tribunals having any jurisdiction over the same. If it be found that the Special Provisions or Standard Specifications for the work conflict with any such law, ordinance or regulation the Contractor shall immediately report same to the Public Works Director in writing. The Contractor shall at all times observe and comply with and shall cause all his/her agents, employees, and independent contractors hired by the Contractor to observe and comply with all such existing and future laws, ordinances, regulations, or decrees.

ARTICLE 10. It is mutually agreed between the parties hereto, that no certificate given or payments made under this contract, except the final payment, shall be evidence of the performance of this contract, either wholly or in part, against any claim of the Contractor. Final payment for the work performed under this contract shall not be made until the lapse of thirty-five (35) calendar days after the notice of completion of said work has been filed for record and no payment shall be construed to be an acceptance of any defective work or improper materials. The Contractor further agrees that acceptance by the Contractor of the final payment due under this contract, and the adjustment and payment of his/her bill rendered for any work done in accordance with any amendments of this Contract, shall be and shall operate as a release to the County of San Luis Obispo from any and all claims or liabilities on account of work performed under this Contract except claims or liabilities for which written notice of claim or protest has been filed with the Public Works Director. Besides guarantees required elsewhere, the Contractor shall and does hereby guarantee all workmanship and material for a period of one year from and after both the date of acceptance of the work and the recordation of the notice of completion by the County and shall repair or replace any or all work and material, together with any other portions of the work which may be displaced in so doing, that in the opinion of the County is or becomes defective during the period of said guarantee without expense whatsoever to the County.

ARTICLE 11. The Contractor hereby declares that he/she has read the Contract Documents pertaining to the work to be accomplished hereunder, has carefully examined the plans and detail drawings of the work to be performed and fully understands the intent and meaning of the same.

ARTICLE 12. Attention is directed to the provisions in Sections 1777.5, 1777.6, and 1777.7 of the Labor Code concerning the employment of apprentices by the Contractor or any subcontractor.

The Contractor and any subcontractor shall comply with the requirements of Section 1777.5, 1777.6, and 1777.7 of the Labor Code in the employment of apprentices. Revised 7/09

To insure compliance and complete understanding of the law relating to apprentices, and specifically the required ratio thereunder, each contractor or subcontractor should, where some question exists, contact the Division of Apprenticeship Standards, 455 Golden Gate Avenue, San Francisco, California, or one of its branch offices prior to commencement of work on this contract. Responsibility for compliance with said Labor Code Sections lies with the prime contractor.

ARTICLE 13. Attention is directed to the provisions in Section 1776 of the Labor Code concerning Contractor and subcontractor payroll records.

The Contractor and any subcontractor shall comply with the requirements of Section 1776 of the Labor Code. Revised 7/09

ARTICLE 14. During the performance of this contract, Contractor agrees to comply with all of the Equal Employment Opportunity provisions of Executive Order No. 11246 of September 24, 1965, including the following:

1. The Contractor will not discriminate against any employee or applicant for employment because of race, color, religion, sex, or national origin. The Contractor will take affirmative action to ensure that applicants are employed, and that employees are treated during employment without regard to their race, color, religion, sex, or national origin. Such action shall include, but not be limited to the following: employment, upgrading, demotion or transfer, recruitment or recruitment advertising, layoffs or termination, rates of pay or other forms of compensation, and selection for training, including apprenticeship. The Contractor agrees to post in conspicuous places, available to employees and applicants for employment, notices to be provided by the Department of Public Works setting forth the provisions of this nondiscrimination clause.

2. The Contractor will, in all solicitations or advertisements for employees placed by or on behalf of the Contractor, state that all qualified applicants will receive consideration for employment without regard to race, color, religion, sex, or national origin.

3. The Contractor will send to each labor union or representative of workers with which he/she has a collective bargaining agreement or other contract or understanding, a notice, to be provided by the Department of Public Works, advising the said labor union or worker's representative of the Contractor's commitments under this Article14 and shall post copies of the Notice in conspicuous places available to employees and applicants for employment.

4. The Contractor will comply with all provisions of Executive Order 11246 of September 24, 1965, and of the rules, regulations (41 CFR, Part 60) and relevant orders of the Secretary of Labor.

5. The Contractor will furnish all information and reports required by Executive Order 11246 of September 24, 1965, and by rules, regulations, and orders of the Secretary of Labor, or pursuant thereto, and will permit access to his books, records, and accounts by the County of San Luis Obispo and the Secretary of Labor for purposes of investigation to ascertain compliance with such rules, regulations, and orders.

6. In the event of the Contractor's noncompliance with the nondiscrimination clauses of this contract or with any of the said rules, regulations or orders, this contract may be cancelled, terminated or suspended in whole or in part and the Contractor may be declared ineligible for further government contracts or federally assisted construction contracts in accordance with procedures authorized in Executive Order 11246 of September 24, 1965, and such other sanctions may be imposed and remedies invoked as provided in Executive Order 11246 of September 24, 1965, or by rule, regulation or order of the Secretary of Labor, or as otherwise provided by law.

7. The Contractor will include the provisions of this Article 14 in every subcontract or purchase order unless exempted by rules, regulations, or orders of the Secretary of Labor issued pursuant to Section 204 of Executive Order 11246 of September 24, 1965, so that such provisions will be binding upon each subcontractor or vendor. The Contractor will take such action with respect to any subcontract or purchase order as the Public Works Director or the Secretary of Labor may direct as a means of enforcing such provisions including sanctions for noncompliance: provided, however, that in the event a contractor becomes involved in, or is threatened with litigation with a subcontractor or vendor as a result of such direction by the Secretary of Labor, the Contractor may request the United States to enter into such litigation to protect the interests of the United States.

ARTICLE 15 Safety: All work conducted by the Contractor and/or subcontractors in the execution of this contract shall be in accordance with current CAL OSHA requirements. Full compensation for compliance with the provisions of this Article 15 shall be considered as included in the other items of work and no additional compensation will be allowed therefor.

Revised 8/09

IN WITNESS WHEREOF, the parties to these presents have hereunto set their hands the year and date first above written, being authorized thereto.

COUNTY OF SAN LUIS OBISPO

By: _____
Chairperson of the Board of Supervisors
County of San Luis Obispo

ATTEST:

_____
Clerk of the Board of Supervisors
of the County of San Luis Obispo

By: _____
Deputy Clerk

_____
(Contractor)

APPROVAL RECOMMENDED
PAAVO OGREN

By: _____

By: _____
Director of Public Works

_____
(Printed Name and Title)

Date _____, 20__

Date Signed:
_____, 20__

APPROVED AS TO FORM AND
LEGAL EFFECT:
WARREN R. JENSEN
County Counsel

By: _____

By: _____

_____
(Printed Name and Title)

Date _____, 20__

Date Signed:

_____, 20__

PERFORMANCE BOND

KNOW ALL BY THESE PRESENTS: That

WHEREAS, the Board of Supervisors of the County of San Luis Obispo, State of California, has awarded to _____

_____

(hereinafter designated as "Principal") a contract for _____

_____

_____

_____; and

WHEREAS, said Principal is required under the terms of said contract to furnish a bond for the faithful performance of said contract;

NOW, THEREFORE, we, the Principal and _____

_____, as Surety, are held and firmly bound unto the County of San Luis Obispo, (hereinafter called "County"), in the penal sum of

_____

($_____), lawful money of the United States, for the payment of which sum well and truly to be made, we bind ourselves, our heirs, executors, administrators and successors, jointly and severally, firmly by these presents.

The condition of this obligation is such that if the above bounded Principal, his or its heirs, executors, administrators, successors or assigns, shall in all things stand to and abide by, and well and truly keep and perform the covenants, conditions and agreements

in the said contract and any alteration thereof made as therein provided, on his/her or their part, to be kept and performed at the time and in the manner therein specified, and in all respects according to their true intent and meaning, and shall indemnify and save harmless County, its officers, agents, and employees, as therein stipulated, then this obligation shall become null and void; otherwise it shall be and remain in full force virtue and effect.

And the said Surety, for value received, hereby stipulates and agrees that no change, extension of time, alteration or addition to the terms of the contract or to the work to be performed thereunder or the specifications accompanying the same shall in any manner affect its obligations on this bond, and it does hereby waive notice of any such change, extension of time, alteration, or additions to the terms of the contract or to the work or to the specifications.

In the event suit is brought upon this bond by County and judgment is recovered, Surety shall pay all costs incurred by County in such suit, including a reasonable attorney's fee to be fixed by the Court.

Death of the Principal shall not relieve Surety of its obligations hereunder.

Performance Bond

IN WITNESS WHEREOF, one identical counterpart of this instrument, which shall for all purposes be deemed an original thereof, has been duly executed by Principal and Surety above named, on the _____ day of_____, 20____.

_____ (Seal)

_____ (Seal)

_____ (Seal)
Principal

_____ (Seal)

_____ (Seal)

_____ (Seal)
Surety

_____

_____
Address

NOTE:

Signatures of those executing for Surety must be properly acknowledged.

Performance Bond

PAYMENT BOND

KNOW ALL BY THESE PRESENTS:

WHEREAS, the Board of Supervisors of the County of San Luis Obispo, State of California, and _____

_____ (hereinafter designated as "Principal") have entered into an agreement for _____

_____

_____

_____

which said Agreement, and all of the Contract Documents attached to or forming a part of said Agreement, are hereby referred to and made a part hereof; and

WHEREAS, pursuant to law, the Principal is required before entering upon the performance of the Work, to file a good and sufficient bond with the body by whom the contract is awarded, to secure claims to which reference is made in Sections 3247 through 3252, inclusive, of the Civil Code of California, and Sections 3181, 3110, 3111 and 3112 of the Civil Code of California,

NOW, THEREFORE, said Principal and the undersigned _____

_____

as corporate surety, are held and firmly bound unto the County of San Luis Obispo, and unto all laborers, materialmen, and other persons referred to in said statutes in the sum of

_____

($_____), lawful money of the United States for the payment of which sum well

and truly made, we bind ourselves, our heirs, executors, administrators, successors, or assigns, jointly and severally by these presents.

The condition of this obligation is such that if the said Principal, his/her or its heirs, executors, administrators, successors or assigns, or subcontractors, shall fail to pay any of the persons named in Civil Code Section 3181, or amounts due under the Unemployment Insurance Code with respect to work or labor performed by any such claimant, or any amounts required to be deducted, withheld, and paid over to the Employment Development Department from the wages of employees of the Principal and his/her subcontractors pursuant to Section 13020 of the Unemployment Insurance Code, with respect to such work and labor, that the surety herein will pay for the same in an amount not exceeding the sum specified in this bond, otherwise the above obligation shall be void. In case suit is brought upon this bond, the said surety will pay a reasonable attorney's fee to be fixed by the court.

This bond shall inure to the benefit of any of the persons named in Civil Code Section 3181 as to give a right of action to such persons or their assigns in any suit brought upon this bond.

Should the condition of this bond be fully performed, then this obligation shall become null and void, otherwise it shall be and remain in full force, virtue, and effect.

Payment Bond

And the said Surety, for value received, hereby stipulates and agrees that no change, extension of time, alteration or addition to the terms of the contract or to the work to be performed thereunder or the specifications accompanying the same shall in any manner affect its obligations on this bond, and it does hereby waive notice of any such change, extension of time, alteration, or additions to the terms of the contract or to the work or to the specifications.

Death of the Principal shall not relieve Surety of its obligations hereunder.

IN WITNESS WHEREOF one identical counterpart of this instrument, which shall for all purposes be deemed an original thereof, has been duly executed by the Principal and Surety above named, on the _____ day of_____, 20____.

_____ (Seal)

_____ (Seal)

_____ (Seal)
Principal

_____ (Seal)

_____ (Seal)

_____ (Seal)
Surety

_____

_____
Address

NOTE:
Signatures of those executing for Surety must be properly acknowledged.

Payment Bond

DBE INFORMATION – BASE BID

(Inclusive of all DBEs including the UDBEs listed at bid proposal)

The **successful bidder** must execute and return the LOCAL AGENCY BIDDER - DBE INFORMATION form, even if no DBE participation will be reported.

AGENCY: SAN LUIS OBISPO COUNTY - DEPT. OF PUBLIC WORKS LOCATION: _____

PROJECT DESCRIPTION: _____

TOTAL CONTRACT AMOUNT: $ _____

BID DATE: _____

BIDDER'S NAME: _____

CONTRACT ITEM NO.	ITEM OF WORK AND DESCRIPTION OR SERVICES TO BE SUBCONTRACTED OR MATERIALS TO BE PROVIDED	CERT. NO. OF DBE AND EXPIRATION DATE	NAME OF DBEs (Must be certified on the date bids are opened - include DBE address and phone number)	DOLLAR AMOUNT DBE

For Local Agency to Complete:

Local Agency Contract Number: 300362

Federal Aid Project Number: SR2SF-5949(109)

Federal Share: _____

Contract Award Date: _____

Total Claimed Participation $_____

_____%

Local Agency certifies that all information is complete and accurate.

Print Name _____ Signature _____ Date _____

Local Agency Representative

(Area Code) Telephone Number: _____

Signature of Bidder _____

Date _____ (Area Code) Tel. No. _____

Person to Contact _____ (Please Type or Print)

For Caltrans Review:

Print Name _____ Signature _____ Date _____

Caltrans District Local Assistance Engineer

DBE Information (Rev 8/09)

Distribution: (1) Copy – Fax or scan a copy immediately to the Caltrans District Local Assistance Engineer (DLAE.) upon award
(2) Copy -- Include in award package to Caltrans District Local Assistance
(3) Original – Local agency file

DBE INFORMATION – BASE BID PLUS ADDITIVE ITEM 1

(Inclusive of all DBEs including the UDBEs listed at bid proposal)

The **successful bidder** must execute and return the LOCAL AGENCY BIDDER - DBE INFORMATION form, even if no DBE participation will be reported.

AGENCY: SAN LUIS OBISPO COUNTY - DEPT. OF PUBLIC WORKS LOCATION: _____

PROJECT DESCRIPTION: _____

TOTAL CONTRACT AMOUNT: $ _____

BID DATE: _____

BIDDER'S NAME: _____

CONTRACT ITEM NO.	ITEM OF WORK AND DESCRIPTION OR SERVICES TO BE SUBCONTRACTED OR MATERIALS TO BE PROVIDED	CERT. NO. OF DBE AND EXPIRATION DATE	NAME OF DBEs (Must be certified on the date bids are opened - include DBE address and phone number)	DOLLAR AMOUNT DBE

For Local Agency to Complete:

Local Agency Contract Number: 300362

Federal Aid Project Number: SR2SF-5949(109)

Federal Share: _____

Contract Award Date: _____

Total Claimed Participation $ _____

_____ %

Local Agency certifies that all information is complete and accurate.

Print Name _____ Signature _____ Date _____

Local Agency Representative

(Area Code) Telephone Number:

Signature of Bidder _____

Date _____ (Area Code) Tel. No. _____

Person to Contact _____ (Please Type or Print)

For Caltrans Review:

Print Name _____ Signature _____ Date _____

Caltrans District Local Assistance Engineer

DBE Information (Rev 8/09)

Distribution: (1) Copy – Fax or scan a copy immediately to the Caltrans District Local Assistance Engineer (DLAE.) upon award
(2) Copy -- Include in award package to Caltrans District Local Assistance
(3) Original – Local agency file

DBE INFORMATION – BASE BID PLUS ADDITIVE ITEMS 1 & 2

(Inclusive of all DBEs including the UDBEs listed at bid proposal)

The **successful bidder** must execute and return the LOCAL AGENCY BIDDER - DBE INFORMATION form, even if no DBE participation will be reported.

AGENCY: SAN LUIS OBISPO COUNTY - DEPT. OF PUBLIC WORKS LOCATION: _____

PROJECT DESCRIPTION: _____

TOTAL CONTRACT AMOUNT: $ _____

BID DATE: _____

BIDDER'S NAME: _____

CONTRACT ITEM NO.	ITEM OF WORK AND DESCRIPTION OR SERVICES TO BE SUBCONTRACTED OR MATERIALS TO BE PROVIDED	CERT. NO. OF DBE AND EXPIRATION DATE	NAME OF DBEs (Must be certified on the date bids are opened - include DBE address and phone number)	DOLLAR AMOUNT DBE

For Local Agency to Complete:

Local Agency Contract Number: 300362

Federal Aid Project Number: SR2SF-5949(109)

Federal Share: _____

Contract Award Date: _____

Total Claimed Participation $_____

_____%

Local Agency certifies that all information is complete and accurate.

_____ _____ _____

Print Name Signature Date

Local Agency Representative

(Area Code) Telephone Number: _____

_____

Signature of Bidder

_____

Date (Area Code) Tel. No.

_____

Person to Contact (Please Type or Print)

For Caltrans Review:

_____ _____ _____

Print Name Signature Date

Caltrans District Local Assistance Engineer

DBE Information (Rev 8/09)

Distribution: (1) Copy – Fax or scan a copy immediately to the Caltrans District Local Assistance Engineer (DLAE.) upon award
(2) Copy -- Include in award package to Caltrans District Local Assistance
(3) Original – Local agency file

COUNTY OF SAN LUIS OBISPO
DEPARTMENT OF PUBLIC WORKS AND TRANSPORTATION

SPECIAL PROVISIONS

FOR

SAFE ROUTES TO SCHOOL IMPROVEMENTS
ON BEECHNUT AVENUE, THOMPSON AVENUE,
AND PRICE STREET, NIPOMO, CA
CONTRACT NO. 300362
FEDERAL NO. SR2SF-5949(109)

The Special Provisions contained herein have been prepared by or under the direction of the following registered engineer(s):

REGISTERED PROFESSIONAL ENGINEER
STEVEN R. JONES
No. 65124
CIVIL
STATE OF CALIFORNIA

PREPARED BY:

PROJECT ENGINEER — DATE: 3-26-10

DESIGN ENGINEER — DATE: 3/29/10

REGISTERED PROFESSIONAL ENGINEER
JEFF B. WERST
C 47971
EXP 12-31-11
CIVIL
STATE OF CALIFORNIA

RECOMMENDED FOR APPROVAL AND ADVERTISING BY:

DEPUTY PUBLIC WORKS DIRECTOR — DATE: 3/29/10

APPROVED BY:

PUBLIC WORKS DIRECTOR — DATE: 3/30/2010

SECTION 1. SPECIFICATIONS AND PLANS

1-1.01 Specifications and Plans: The work embraced herein shall be done in accordance with the Standard Specifications of the State of California, Department of Transportation, dated May 2006 (hereinafter called, "Standard Specifications"), the Standard Plans of the State of California, Department of Transportation, dated May 2006 (hereinafter called, "Standard Plans"), insofar as they may apply and in accordance with these Contract Documents. Wherever State Agencies, Departments, or Officers are referred to in the above mentioned Standard Specifications and Standard Plans, the comparable County of San Luis Obispo Agency, Department, or Officer having jurisdiction shall be meant thereby for the purpose of these Contract Documents.

The County hereby elects under Public Contract Code § 20396 to have said applicable provisions of the Standard Specifications and Standard Plans referenced above, including those provisions modified by these Special Provisions, governed by the State Contract Act to the extent, and only to the extent, one or both of the following conditions is satisfied: (1) the applicable provisions of the Standard Specifications or Standard Plans expressly refer to the State Contract Act; or (2) the County would lack the authority to implement the applicable provisions of the Standard Specifications or Standard Plans absent the County's election to have the County's implementation of the provisions governed by the State Contract Act. Revised 10/09

No amendment by the Department of Transportation to the Standard Specifications shall apply to these Contract Documents unless the amendment is expressly set forth in these Special Provisions.

In case of conflict between the Standard Specifications and the contract Special Provisions herein, the Special Provisions shall take precedence over such conflicting portions.

SECTION 2. PROPOSAL REQUIREMENTS AND CONDITIONS

2-1.01 Proposal Requirements and Conditions: Attention is directed to the provisions in Section 2, "Proposal Requirements and Conditions," of the Standard Specifications and these Special Provisions.

The bidder's bond shall conform to the bond form in the section titled "Bid Proposal and Forms" of the Contract Documents and shall be properly filled out and executed. The bidder's bond form included in the Contract Documents may be used.

In conformance with Public Contract Code Section 7106, a Noncollusion Affidavit is included in the section titled "Bid Proposal and Forms" of the Contract Documents. Signing the Bid Proposal shall also constitute signature of the Noncollusion Affidavit.

The Contractor, sub-recipient, or subcontractor shall not discriminate on the basis of race, color, national origin, or sex in the performance of this contract. The Contractor shall carry out applicable requirements of Title 49 Code of Federal Regulations Part 26 (49 CFR 26) in the award and administration of contracts financed in whole or in part with Federal funds. Failure by the Contractor to carry out these requirements is a material breach of this contract, which may result in the termination of this contract or such other remedy as the County deems appropriate. Each subcontract signed by the bidder must include this assurance.

Failure of the bidder to fulfill the requirements of the Contract Documents for submittals required to be furnished after bid opening will be grounds for finding the bid nonresponsive.

The following provisions for Section 2, "Proposal Requirements and Conditions," of the Standard Specifications are hereby modified as set forth hereafter.

Section 2-1.03, "Examination of Plans, Specifications, Contract, and Site of Work," of the Standard Specifications is hereby amended by modifying the first sentence of the 4th paragraph to read: "Inspection of such records may be made at the Department of Public Works and Transportation of the County of San Luis Obispo."

Section 2-1.05, "Proposal Forms" of the Standard Specifications, is hereby amended by substituting the words, "General and Special Provisions" for the words, "Proposal and Contract" in the first sentence of the 2nd paragraph and by substituting the words, "Notice to Bidders" for the words, "Notice to Contractors" in the first sentence of the 3rd paragraph. The 4th paragraph is hereby amended to read: "Proposal forms shall be obtained from the Department of Public Works and Transportation, County Government Center, San Luis Obispo, CA. 93408." The 5th paragraph is hereby deleted.

Section 2-1.07, "Proposal Guaranty" of the Standard Specifications, is hereby amended by substituting the words, "made payable to the County of San Luis Obispo" for the words, "made payable to the Director of Transportation" in the first paragraph. The 2nd paragraph is hereby amended by adding the following sentence, "The provisions of the Public Contract Code § 10181 are applicable to this contract." The first sentence of the last paragraph is hereby amended by substituting the words, "General and Special Provisions" for the words, "Proposal and Contract". The last sentence of the last paragraph is hereby deleted.

Section 2-1.08, "Withdrawal of Proposals" of the Standard Specifications, is hereby amended by substituting the words, "Office of the Clerk of the Board of Supervisors of the County of San Luis Obispo" for the words, "Office Engineer, Division of Construction" in the first sentence. The last sentence is hereby amended by modifying it to read: "Any bid received at the Office of the Clerk of the Board of Supervisors of the County of San Luis Obispo after the date and time specified in the Notice to Bidders shall <u>not</u> be considered and shall be returned to the bidder unopened nor may any bid be withdrawn after the time fixed in the public notice for the opening of bids."

Section 2-1.105, "Previous Disqualification, Removal or Other Prevention of Bidding", of the Standard Specifications, is hereby amended by deleting the first paragraph.

Section 2-1.108, "Compliance with Orders of the National Labor Relations Board", of the Standard Specifications, is hereby amended by modifying the last paragraph to read: "The statement required by said Section 10232 is included in the section titled "Bid Proposal and Forms" of the Contract Documents."

Section 2-1.11, "Ineligibility to Contract", of the Standard Specifications is hereby amended by modifying the last paragraph to read: "A form for the statement required by Section 10285.1 is included in the section titled "Bid Proposal and Forms" of the Contract Documents."

2-1.02 <u>Required Listing of Proposed Subcontractors</u>: The designated subcontractors listed in the bidder's proposal shall list therein the name and address of all subcontractors to whom the bidder proposes to subcontract portions of the work in an amount in excess of 1/2 of one percent of the total bid, or in the case of bids for the construction of streets and highways, including bridges, in excess of 1/2 of the one percent or $10,000, whichever is greater, in accordance with the Subletting and Subcontracting Fair Practices Act commencing with Section 4100 of the Public Contract Code. The bidder's attention is invited to other provisions of said Act related to the imposition of penalties for a failure to observe its provisions by using unauthorized subcontractors or by making unauthorized substitutions.

The "DESIGNATION OF SUBCONTRACTORS" form for the designation of subcontractors, as required herein, is included in the section titled "Bid Proposal and Forms" of the Contract Documents and shall be completely filled out, signed by the bidder, and submitted with the bid proposal. **The bidder shall complete and submit three "DESIGNATION OF SUBCONTRACTORS" forms with bidder's bid proposal in order to be considered responsive, one form for the Base Bid and one form for each of the Additive Bid Items.**

The Contractor, subrecipient, or subcontractor shall not discriminate on the basis of race, color, national origin, or sex in the performance of this contract. The Contractor shall carry out applicable requirements of 49 CFR part 26 in the award and administration of contracts financed in whole or in part with Federal funds. Failure by the Contractor to carry out these requirements is a material breach of this contract, which may result in the termination of this contract or such other remedy as the County deems appropriate. Each subcontract signed by the bidder must include this assurance.

2-1.03 Federal Lobbying Restrictions: Section 1352, Title 31, United States Code prohibits Federal funds from being expended by the recipient or any lower tier subrecipient of a Federal-aid contract to pay for any person for influencing or attempting to influence a Federal agency or Congress in connection with the awarding of any Federal-aid contract, the making of any Federal grant or loan, or the entering into of any cooperative agreement.

If any funds other than Federal funds have been paid for the same purposes in connection with this Federal-aid contract, the recipient shall submit an executed certification and, if required, submit a completed disclosure form as part of the bid documents.

A certification for Federal-aid contracts regarding payment of funds to lobby Congress or a Federal agency is included in the Contract Documents. Standard Form - LLL, "Disclosure of Lobbying Activities," with instructions for completion of the Standard Form is also included. Signing the Proposal shall constitute signature of the Certification.

The above-referenced certification and disclosure of lobbying activities shall be included in each subcontract and any lower-tier contracts exceeding $100,000. All disclosure forms, but not certifications, shall be forwarded from tier to tier until received by the Engineer.

The Contractor, subcontractors, and any lower-tier contractors shall file a disclosure form at the end of each calendar quarter in which there occurs any event that requires disclosure or that materially affects the accuracy of the information contained in any disclosure form previously filed by the Contractor, subcontractors, and any lower-tier contractors. An event that materially affects the accuracy of the information reported includes:

1. A cumulative increase of $25,000 or more in the amount paid or expected

to be paid for influencing or attempting to influence a covered Federal action; or

2. A change in the person(s) or individual(s) influencing or attempting to influence a covered Federal action; or

3. A change in the officer(s), employee(s), or Member(s) contacted to influence or attempt to influence a covered Federal action.

2-1.04 Disadvantaged Business Enterprise (DBE): This contract is subject to Title 49 Code of Federal Regulations Part 26 (49 CFR 26) entitled "Participation by Disadvantaged Business Enterprises in Department of Transportation Financial Assistance Programs." The Regulations in their entirety are incorporated herein by this reference.

Consistent with 49 Code of Federal Regulations (CFR) Part 26.11, data provided by the bidders on the "BIDDER'S LIST OF SUBCONTRACTORS (DBE AND NON-DBE)" will provide the County as accurate data as possible about the DBE and non-DBE firms actively seeking work on its public works contracts, for use in setting overall DBE goals. Bidders shall submit the "BIDDER'S LIST OF SUBCONTRACTORS (DBE AND NON-DBE)" forms with their bid. Revised 8/09

Bidders shall take necessary and reasonable steps to ensure that DBEs have an opportunity to participate in this contract.

To ensure there is equal participation of the DBE groups specified in 49 CFR 26.5, the County specifies a goal for Underutilized Disadvantaged Business Enterprises (UDBEs). UDBE is a firm meeting the definition of a DBE as specified in 49 CFR 26 and is a member of one the following groups:

1. Black American
2. Asian-Pacific American
3. Native American
4. Women

Reference to DBEs includes all UDBEs, but reference to UDBEs does not include all DBEs. Revised 8/09

It is the bidder's responsibility to make enough work available to UDBEs and to select those portions of the work or material needs consistent with the available UDBEs. Revised 8/09

Bidders shall meet the UDBE Goal shown in the Notice to Bidders or demonstrate that, prior to bidding, Good Faith Efforts were made to meet the goal.

It is the bidder's responsibility to verify the UDBE firm is certified as DBE at the

date of bid opening. Listings of DBEs certified by the California Unified Certification Program (CUCP) are available at:

http://www.dot.ca.gov/hq/beq/find_certified.htm

Only UDBE participation will count towards the UDBE goal. DBE participation will count towards the County's Annual Anticipated DBE Participation Level and the California statewide goal.

Credit for materials or supplies purchased from UDBEs will count towards the UDBE goal in the following manner:

1. If the materials or supplies are obtained from a UDBE manufacturer, 100 percent of the cost of the materials or supplies will count toward the UDBE goal.

2. If the materials or supplies are purchased from a UDBE regular dealer, 60 percent of the cost of the materials or supplies will count toward the UDBE goal.

3. If the UDBE is neither a manufacturer nor a regular dealer, only the entire amount of fees, commissions, and charges for assistance in the procurement and delivery of the materials or supplies will count toward the UDBE goal. 49 CFR 26.55 defines "manufacturer" and "regular dealer". Revised 8/09

Credit for employing a UDBE trucking company will count towards the UDBE goal if the UDBE trucking company performs a commercially useful function as defined in 49 CFR 26.55.

2-1.04A <u>UDBE Commitment Submittal</u>: Bidders shall submit UDBE information on the "UDBE COMMITMENT" included in the section titled "Bid Proposal and Forms" of the Contract Documents with the bid proposal. This form shall be completely filled out, signed by the bidder, and submitted with the bid proposal. Revised 8/09

Bidders are encouraged to submit written confirmation for each UDBE listed on said form that is participating in the contract work with the bid proposal. A copy of a UDBE's quote will serve as written confirmation that the UDBE is participating in the contract. If said written confirmation is not submitted with the bid, the apparent low bidder, second low bidder, and the third low bidder, must complete and submit this confirmation to the office of the County Clerk, 1055 Monterey Street, Room D-120, San Luis Obispo, CA 93408, no later than 4:00 p.m. on the second business day after bid opening. Failure to submit said confirmation within said time period shall be grounds for forfeiture of the bidder's security. A copy of a UDBE's quote will serve as written confirmation that the UDBE is participating in the contract. Revised 9/09

Other bidders do not need to submit the written confirmation unless the County requests it. If the County requests a bidder to submit this confirmation, the bidder shall submit said confirmations no later than 4:00 p.m. on the third business day following the request. Revised 9/09

A UDBE subcontractor listed on the "UDBE COMMITMENT" shall also be listed on the "DESIGNATION OF SUBCONTRACTORS" form when the bidder proposes to subcontract portions of the work in an amount in excess of 1/2 of one percent of the total bid, or in the case of bids for the construction of streets and highways, including bridges, in excess of 1/2 of the one percent or $10,000, whichever is greater, in accordance with the Subletting and Subcontracting Fair Practices Act commencing with Section 4100 of the Public Contract Code. Revised 8/09

2-1.04B UDBE Good Faith Effort Submittal: Bidders are encouraged to submit the "UDBE INFORMATION – GOOD FAITH EFFORTS" form and supporting documentation (hereafter, collectively "GFE documentation") with the bid proposal to establish that, before the bid, the bidder made adequate Good Faith Efforts (GFE) to meet the goal. Only Good Faith Efforts directed towards obtaining participation by UDBEs will be considered. Revised 8/09

If the GFE documentation is not submitted with the bid, the apparent low bidder, second low bidder, and the third low bidder, must complete and submit this documentation to the County. The GFE documentation must be received by the County no later than 4:00 p.m. on the second business day after bid opening. Failure to submit said form and the relevant supporting documentation within said time period shall be grounds for forfeiture of the bidder's security. GFE documentation shall be submitted to the office of the County Clerk, 1055 Monterey Street, Room D-120, San Luis Obispo, California 93408. Revised 8/09

Other bidders do not need to submit the GFE documentation unless the County requests it. If the County requests a bidder to submit their GFE documentation, the bidder shall submit said documentation no later than 4:00 p.m. on the third business day following the request. Revised 9/09

Bidders are cautioned that even though their "UDBE COMMITMENT" form indicates they will meet the UDBE goal, they are required to submit their GFE documentation, within the time specified herein, to be considered a responsive bidder in the event the County finds the UDBE goal has not been met. Revised 8/09

The GFE documentation must include the following information and supporting documents, as necessary:

1. Items of work the bidder has made available to UDBE firms. Identify those items of work the bidder might otherwise perform with its own forces and those items that have been broken down into economically

feasible units to facilitate UDBE participation. For each item listed, show the dollar value and percentage of the total contract. It is the bidder's responsibility to demonstrate that sufficient work to meet the goal was made available to UDBE firms.

2. The names of certified UDBEs and the dates on which they were solicited to bid on the project. Include the items of work offered. Describe the methods used for following up initial solicitations to determine with certainty if the UDBEs were interested, and the dates of the follow up. Attach supporting documents such as copies of letters, memos, facsimiles sent, telephone logs, telephone billing statements, and other evidence of solicitation. Bidders are reminded to solicit certified UDBEs through all reasonable and available means and provide sufficient time to allow UDBEs to respond.

3. For each item of work made available, the UDBEs that provided quotes, the selected firm and its status as a UDBE, the price quote for each firm, and the name, address, and telephone number for each firm. If the firm selected for the item is not a UDBE, provide the reasons for the selection.

4. The names and dates of each publication in which a request for UDBE participation for the project was placed by the bidder. Attach copies of the published advertisements.

5. The names of agencies and the dates on which they were contacted to provide assistance in contacting, recruiting, and using UDBE firms. If the agencies were contacting in writing, provide copies of supporting documents.

6. Descriptions of the efforts made to provide interested UDBEs with adequate information about the plans, specifications, and requirements of the contract to assist them in responding to a solicitation. If the bidder has provided information, identify the name of the UDBE assisted, the nature of the information provided, and date of contact. Provide copies of supporting documents, as appropriate.

7. Descriptions of efforts made to assist interested UDBEs in obtaining bonding, lines of credit, insurance, necessary equipment, supplies, and materials (excluding supplies and equipment which the UDBE subcontractor purchases or leases from the prime contractor or its affiliate). If such assistance was provided by the bidder, identify the name of the UDBE assisted, nature of the assistance offered, and date. Provide copies of supporting documents, as appropriate.

8. Any additional data to support a demonstration of GFE.

SECTION 3. AWARD AND EXECUTION OF CONTRACT

3-1.01 Award of Contract: Attention is directed to the provisions of Section 3, "Award and Execution of Contract," of the Standard Specifications and these Special Provisions.

The award of contract, if it be awarded, will be to the lowest responsible bidder, whose proposal complies with all of the requirements prescribed, with the lowest base bid without consideration of the prices on the additive items. The County of San Luis Obispo has the option of adding any of the additive bid items after the lowest responsible bidder has been determined, and the bidder is bound by its bid amount for said additive item(s). Such award, if made, will be made within 45 calendar days after the opening of proposals.

A "DBE INFORMATION" form is included in the section titled "Agreement" of the Contract Documents to be executed by the successful bidder. The purpose of the form is to collect data required under 49 CFR 26. Even if no DBE participation will be reported, the successful bidder must execute and return the form. Revised 8/09

The successful bidder's "DBE INFORMATION" form should include the names, addresses, and phone numbers of DBE firms that will participate, with a complete description of work or supplies to be provided by each, and the dollar value of each DBE transaction. When 100 percent of a contract item of work is not to be performed or furnished by a DBE, a description of the exact portion of that work to be performed or furnished by that DBE shall be included in the DBE information, including the planned location of that work. A successful bidder certified as a DBE shall describe the work it has committed to performing with its own forces as well as any other work that it has committed to be performed by DBE subcontractors, suppliers, and trucking companies. Revised 8/09

The successful bidder is required to provide written confirmation from each DBE that the DBE is participating in the contract. A copy of a DBE's quote will serve as written confirmation that the DBE is participating in the contract. If a DBE is participating as a joint venture partner, the successful bidder is required to submit a copy of the joint venture agreement. Revised 8/09

If the lowest responsible bidder refuses or fails to complete and return the "DBE INFORMATION" form in a timely manner, the Board of Supervisors of the County of San Luis Obispo may award the contract to the second lowest responsible bidder. Such award, if made, will be made within 90 calendar days after the opening of proposals. If the second lowest responsible bidder refuses or fails to complete and return the "DBE INFORMATION" form in a timely manner, the Board of Supervisors of the County of San Luis Obispo may award the contract to the third lowest responsible bidder, and so on. Such award, if made, will be made within 135 calendar days after the opening of proposals. The periods of time specified above within which the award of contract may be made shall be subject to extension for such further period as may be agreed

upon in writing between the County of San Luis Obispo and the bidder concerned. Revised 8/09

3-1.02 Contract Bonds: The successful bidder shall furnish two (2) bonds:

1. The Payment bond to secure the claim payments of laborers, workers, mechanics, or materialmen providing goods, labor, or services under the contract. This bond shall be equal to one hundred percent (100%) of the total contract bid.
2. The Performance bond to guarantee the faithful performance of the contract. This bond shall be equal to one hundred percent (100%) of the total contract bid.

Forms for the two (2) required bonds are included in the section titled "Bid Proposal and Forms" of the Contract Documents.

Surety on said bonds must agree that death of the Contractor shall not relieve the surety of its obligation hereunder. The said surety, for the value received, must stipulate and agree that all alterations, extension of time, extra and additional work, and other changes authorized by these Specifications or any part of the contract may be made without securing consent of the surety on the contract bonds, and such actions shall not in any way affect the obligations of the surety on the bonds.

Attention is directed to the provisions in Section 6-1.075, "Guarantee," of the Amendments to the Standard Specifications.

3-1.03 Execution of Contract: The contract shall be signed by the successful bidder and returned, together with the contract bonds, "DBE INFORMATION" form, copy of insurance policies, and Certificates of Insurance, with documents to verify any self insurance coverage within ten (10) calendar days, not including Saturdays, Sundays, and legal holidays, after the bidder has received the contract for execution. Revised 1/10

The contract shall not be deemed executed by the successful bidder unless all of the above documents are received by the County with the signed contract within said time period. The bidder's security may be forfeited for failure to execute the contract within the time specified. Revised 8/09

SECTION 4. PROSECUTION AND PROGRESS OF THE WORK

4-1.01 General: Attention is directed to the provisions in Section 8, "Prosecution and Progress," of the Standard Specifications and these Special Provisions.

The Contractor shall begin work within 10 working days from the date of receipt of the County's "Notice to Proceed."

In consideration of the lead time required for design, fabrication and erection of either one or both of the pedestrian bridges, a total of 40 additional working days will be allowed for Additive Bid Item 1 with or without Additive Bid Item 2. This work shall be diligently prosecuted to completion before the expiration of 40 WORKING DAYS for the base work, and 40 ADDITIONAL WORKING DAYS for any combination of Additive Bid Item 1, and/or Additive Bid Item 2, from the date of receipt of the County's "Notice to Proceed." The Contractor shall not begin work in advance of receiving the County's "Notice to Proceed." Revised 5/10

4-1.02 Liquidated Damages: It is agreed by the parties to the contract that in the case all the work called for under the contract in all parts and requirements is not finished or completed within the number of working days as set forth in these Special Provisions, damage will be sustained by the County of San Luis Obispo, and that it is and will be impractical and extremely difficult to ascertain and determine the actual damage which the County will sustain in the event of and by reason of such delay; and it is therefore agreed that the Contractor will pay to the County of San Luis Obispo the sum of ONE THOUSAND HUNDRED DOLLARS ($1,300) per day for each and every calendar days delay in finishing the work in excess of the number of working days prescribed above as liquidated and agreed damages; and the Contractor agrees to pay said liquidated damages herein provided for, and further agrees that the County may deduct the amount thereof from any moneys due or that may become due the Contractor under the contract.

The language in Sections 10253 through 10260 of the Public Contract Code are incorporated herein by reference as though fully set forth herein (with the word "Director" therein construed to mean the Public Works Director); provided, however, that prequalification of bidders shall not be required, and any references in said sections to prequalification of bidders are hereby deleted.

4-1.03 Submittals: The Contractor shall submit the following to the Engineer within 10 calendar days, not including Saturdays, Sundays, and legal holidays, of the Contractor's receipt of the fully executed contract:

- Storm Water Pollution Prevention Plan – 3 copies
- Recycling Plan
- Proposed Progress Schedule
- Identity of Project Safety Officer

The Contractor shall allow 10 days, not including Saturdays, Sundays, and legal holidays, for the Engineer's review. The Contractor shall revise and resubmit the submittal within 5 days, not including Saturdays, Sundays, and legal holidays, of receipt of the Engineer's comments. No claim will be allowed for damages or extensions of time because of delays in work resulting from rejection of the submittals or from revisions and resubmittal of the submittals. The number of working days within which the Contractor must complete the work under this contract shall be reduced by 1 working day for each day the Contractor fails to submit or resubmit the required submittal to the Engineer within the prescribed time allowances.

The Engineer's review and approval shall not waive any contract requirements and shall not relieve the Contractor from complying with Federal, State, and local laws, regulations, and requirements. No claim will be allowed for damages or extensions of time because of delays in work resulting from any documents submitted by Contractor to any federal, state, or local agency that are determined by such agency to be incomplete or not in compliance with any applicable laws, regulations, or requirements.

Revised 1/10

4-1.04 Mandatory Pre-Construction Conference: Prior to the issuance of the "Notice to Proceed" a mandatory pre-construction conference will be held at the office of the Construction Engineer for the purpose of discussing with the Contractor the scope of work, contract drawings, specifications, existing conditions, materials to be ordered, equipment to be used, and all essential matters pertaining to the prosecution and the satisfactory completion of the project as required. The Contractor's representatives at this conference shall include major superintendents and shall include major subcontractors' representatives. So long as the County provides the Contractor at least 5 calendar days advance notice of the date and time of said conference. The number of working days within which the Contractor must complete the work under this contract shall be reduced by 1 working day for each day said conference is delayed by the Contractor's failure to attend the conference with the appropriate representatives.

A written record of attendance and items discussed shall be made by the Engineer and a copy of the record shall be kept in the Engineer's files. If for any reason a pre-construction conference is not held the Engineer will notify the Contractor in writing.

SECTION 5. GENERAL AND MISCELLANEOUS

5-1.01 Definitions and Terms: Attention is directed to the provisions in Section 1, "Definitions and Terms," of the Standard Specifications with the modifications as set forth hereafter.

Section 1-1.13, "Department," of the Standard Specifications is hereby amended to read: "The County of San Luis Obispo acting by and through its Department of Public Works and Transportation."

Section 1-1.15, "Director," of the Standard Specifications is hereby amended to read: "The Director of the Department of Public Works and Transportation of the County of San Luis Obispo."

Section 1-1.18, "Engineer," of the Standard Specifications is hereby amended to read: "Any duly authorized representative either employed by or contracting with the Department of Public Works and Transportation acting within the scope of the particular duties delegated to them."

Section 1-1.19, "Engineer's Estimate," of the Standard Specifications is hereby amended to read: "The contract bid form indicating the approximate quantities of work to be performed as contained in the Bid Proposal."

Section 1-1.26, "Liquidated Damages," of the Standard Specifications is hereby amended to read: "The amount prescribed in Section 4 of the Special Provisions pursuant to Government Code Section 53069.85 to be paid to the County, or to be deducted from any payments due, or to become due, the Contractor for each day's delay in completing the whole or any specified portion of work beyond the time allowed in the Contract Documents."

Section 1-1.39, "State," of the Standard Specifications is hereby amended to read: "The State of California and its political subdivision, the County of San Luis Obispo."

Section 1-1.40, "State Contract Act," of the Standard Specifications is hereby amended to read: "Only those sections or provisions of Chapter 1 of Part 2 of Division 2 of the Public Contract Code (Section 10100 et seq.) which are specifically incorporated into this contract are applicable to this contract. All other sections and provisions of Chapter 1 of Part 2 of Division 2 of the Public Contract Code are not applicable to this contract and do not constitute a part hereof."

5-1.02 Scope of Work: Attention is directed to the provisions in Section 4, "Scope of Work," of the Standard Specifications with the modifications as set forth hereafter.

Section 4-1.03B(1), "Increases of More Than 25 Percent," of the Standard Specifications is amended by adding the following sentence to the last

paragraph: "Additionally, such written request by the Contractor shall be accompanied by adequate, detailed data to support actual costs incurred."

Section 4-1.03B(2), "Decreases of More Than 25 Percent, " of the Standard Specifications is hereby amended by modifying the first sentence of the first paragraph to read: "Should the total pay quantity of any item of work required under the contract be less than 75 percent of the Engineer's Estimate therefor, the Engineer may reserve the right to make no adjustment in the corresponding unit price for that item if he/she so elects, except that an adjustment in compensation pursuant to this Section will be made if requested in writing by the Contractor. Additionally, such written request by the Contractor shall be accompanied by adequate, detailed data to support actual costs incurred."

Section 4-1.03D, "Extra Work," of the Standard Specifications is hereby amended by adding the following sentences to the 2nd paragraph: "All extra work shall be reported daily by the Contractor upon forms furnished by the Engineer, signed by both parties at the conclusion of each workday. Said daily extra work reports shall thereafter be considered the true record of the extra work performed and shall become the basis of payment therefor."

5-1.03 Control of Work: Attention is directed to Section 5, "Control of Work," of the Standard Specifications with the modifications as set forth hereafter.

Section 5-1.07, "Lines and Grades," of the Standard Specifications is hereby amended to read: "Stakes or marks will be set by the Engineer as the Engineer determines to be necessary to establish the lines and grades required for the completion of the work specified in these specifications, on the plans, and in the Special Provisions.

When the Contractor requests stakes or marks to be set, the Contractor shall notify the Engineer of the request in writing no less than three (3) working days in advance of starting operations that require their use. The Contractor shall also submit to the Engineer for acceptance, a tentative schedule of all anticipated staking requests for the initial thirty (30) working days of the contract. The Engineer shall determine if the staking request schedule is reasonable before recognizing any requests for stakes or marks to be set. Said schedule shall correlate with any order of work specified in the Contract Special Provisions. If any vegetation needs to be cleared or grubbed, as determined by the Engineer, before stakes or marks can be set, then the Contractor shall clear the obstructing vegetation for the proper placement of stakes or marks. The Engineer and the Contractor shall agree on the extent of vegetation removal necessary to prepare the work site for the setting of stakes or marks. Vegetation removal for the preparation of the work site for the setting of stakes or marks shall be considered as included in the various items of work involved and no additional compensation will be allowed therefor. The Contractor will not be entitled to any compensation for any perceived delay, nor entitled to an extension of time for any perceived delay without due cause for the period between when the work site is deemed cleared by the Engineer and when the stakes or marks are set for use by the Contractor.

Stakes and marks set by the Engineer shall be carefully preserved by the Contractor. In case the stakes and marks are destroyed or damaged, the stakes and marks will be replaced or restored at the Engineer's earliest convenience. The Contractor will be charged $875.00 for each stake or mark replaced or restored which in the judgment of the Engineer had been carelessly or willfully destroyed or damaged by the Contractor's operations. This charge will be deducted from any moneys due or to become due the Contractor."

Section 5-1.116, "Differing Site Conditions," of the Amendments to the Standard Specifications is hereby amended by including the following language from Section 7104 of the Public Contract Code: "7104. Any public works contract of a local public entity which involves digging trenches or other excavations that extend deeper than four feet below the surface shall contain a clause which provides the following: (a) That the contractor shall promptly, and before the following conditions are disturbed, notify the public entity, in writing, of any: (1) Material that the contractor believes may be material that is hazardous waste, as defined in Section 25117 of the Health and Safety Code, that is required to be removed to a Class I, Class II, or Class III disposal site in accordance with provisions of existing law. (2) Subsurface or latent physical conditions at the site differing from those indicated. (3) Unknown physical conditions at the site of any unusual nature, different materially from those ordinarily encountered and generally recognized as inherent in work of the character provided for in the contract. (b) That the public entity shall promptly investigate the conditions, and if it finds that the conditions do materially so differ, or do involve hazardous waste, and cause a decrease or increase in the contractor's cost of, or the time required for, performance of any part of the work shall issue a change order under the procedures described in the contract. (c) That, in the event that a dispute arises between the public entity and the contractor whether the conditions materially differ, or involve hazardous waste, or cause a decrease or increase in the contractor's cost of, or time required for, performance of any part of the work, the contractor shall not be excused from any scheduled completion date provided for by the contract, but shall proceed with all work to be performed under the contract. The contractor shall retain any and all rights provided either by contract or by law which pertain to the resolution of disputes and protests between the contracting parties."

5-1.04 Prevailing Wage: Attention is directed to the provisions in Section 7-1.01A(2), "Prevailing Wage," of the Standard Specifications and these Special Provisions.

Pursuant to the provisions of Section 1773 of the California Labor Code, the Board of Supervisors of the County of San Luis Obispo has obtained from the Director of the California Department of Industrial Relations the general prevailing rate of per diem wages and the general prevailing rate for holiday and overtime work for the locality in which the work is to be performed for each needed craft, classification, or type of workman. Copies of said prevailing rate of per diem wages are on file in the Office of the Clerk of the Board of Supervisors and available at the California Department of Industrial Relations' web site at:

www.dir.ca.gov/DLSR/PWD.

The wage rates determined by the Director of Industrial Relations refer to expiration dates. Prevailing wage determinations with a single asterisk after the expiration date are in effect on the date of advertisement for bids and are good for the life of the contract. Prevailing wage determinations with double asterisks after the expiration date indicate that the wage rate to be paid for work performed after this date has been determined. If work is to extend past this date, the new rate shall be paid and incorporated in the contract. The Contractor shall contact the Department of Industrial Relations as indicated in the wage rate determinations to obtain predetermined wage changes.

Pursuant to Section 1773.2 of the Labor Code, a copy of said general prevailing rates shall be posted by the Contractor in a prominent place at the site of the work.

Additionally, the Director of Industrial Relations has reserved the right to issue corrected wage determinations for certain crafts contained in the prevailing wage determinations applicable to this contract. These corrected prevailing wage rates shall apply to this contract in the same manner as if they had been published in the prevailing wage determinations applicable to this contract. These revisions to the general prevailing wage rates are on file at the Office of the Clerk of the Board of Supervisors and available at the California Department of Industrial Relations' web site at:

www.dir.ca.gov/DLSR/PWD.

Additionally, changes in general prevailing wage determinations which conform to Labor Code Section 1773.6 and Title 8 California Code of Regulations Section 16204 shall apply to the contract when issued by the Director of Industrial Relations at least ten (10) calendar days prior to the date of the Notice to Bidders for the project. Changes, if any, to the general prevailing wage rate will be on file at the Office of the Clerk of the Board of Supervisors and available at the California Department of Industrial Relations' web site at:

www.dir.ca.gov/DLSR/PWD.

5-1.05 Preservation of Property: Attention is directed to the provisions in Section 7-1.11, "Preservation of Property," of the Standard Specifications is hereby amended by adding the following to the end of the second paragraph: "Pursuant to Section 8771(b) of the California Business and Professions Code, existing survey monuments that control the location of subdivisions, tracts, boundaries, roads, streets, or highways, or provide survey control that are within or adjacent to the Contractor's operations, shall be located and referenced by or under the direction of a licensed land surveyor or registered civil engineer prior to the time when any streets, highways, other rights-of-way, or easements are improved, constructed, reconstructed, maintained, resurfaced, or relocated. In the event that any existing survey monument is disturbed in any way by the Contractor's operations as determined by a licensed land surveyor or registered civil engineer, they shall be reset accordingly and a corner record shall be filed with the county surveyor prior to the recording of a certificate of completion for the

project. Full compensation for furnishing all labor, materials, tools, equipment, and incidentals, and for doing all the work involved in locating existing survey monuments by or under the direction of a licensed land surveyor or registered civil engineer, resetting any disturbed survey monument and filing a corner record, shall be considered as included in the prices paid for the various contract items of work and no additional compensation will be allowed therefor."

5-1.06 Progress Schedule: Progress schedules will be required for this contract and shall conform to the provisions in Section 8-1.04, "Progress Schedules," of the Standard Specifications.

The Contractor shall submit to the Engineer a practicable progress schedule in conformance with the provisions in Section 4-1.03, "Submittals," of these Special Provisions, and within 5 working days of the Engineer's written request at any other time.

5-1.07 Measurement and Payment: Attention is directed to the provisions in Section 9, "Measurement and Payment," of the Standard Specifications with the modifications as set forth hereafter.

The 13th paragraph of Section 9-1.01, "Measurement of Quantities," of the Standard Specifications shall be amended to read as follow: "Whenever pay quantities of materials are determined by weighting, the scales shall be operated by a weighmaster licensed in accordance with provisions of the California Business and Professions Code, Division 5, Chapter 7. The Contractor shall furnish a Public Weighmaster's certificate, or a private Weighmaster's certificate (load slip) with each load and a Daily Record of Platform Scale Weights. The Weighmaster's certificates shall be numbered consecutively to correspond with the Daily Record of Platform Scale Weights. The Daily Record of Platform Scale Weights shall be prepared using a form supplied by the County and shall be delivered to the Engineer at the end of each day. Contractor shall provide the County sufficient advance notice so as to enable a representative of the County to be present to witness the Weighing and check the Daily Record of Platform Scale Weights.

Section 9-1.04, "Notice of Potential Claim," of the Standard Specifications is hereby amended by adding the following: "Additionally, the written notice of potential claim shall be submitted on Caltrans form CEM-6201 and shall be certified with reference to the California False Claims Act, Government Code Sections 12650-12655. The notice shall set forth the reasons for which the Contractor believes additional compensation will or may be due and the nature of the costs involved. Unless the amount of the potential claim has been stated in the written notice, the Contractor shall within 15 working days of submitting said notice, furnish an estimate of the cost of the affected work and impacts, if any, on project completion. Said estimate of costs may be changed or updated by the Contractor when conditions have changed. Revised 9/09

When the affected work is completed, the Contractor shall submit substantiation of actual costs. Failure to do so shall be sufficient cause for denial of any claim subsequently filed on the basis of said notice of potential claim.

Should the Contractor, in conjunction with or subsequent to the assertion of a potential claim, request inspection and copying of documents or records in the possession of the County that pertain to the potential claim, the Contractor shall make its records of the project, as deemed by the County to be pertinent to the potential claim, available to the County for inspection and copying."

Section 9-1.05, "Stop Notices," of the Standard Specifications is hereby amended by adding the following statement: "Stop notice information may be obtained from the Department of Public Works and Transportation."

Section 9-1.06, "Partial Payments," of the Standard Specifications is hereby amended by modifying the third paragraph to read, "In the event the County is withholding retainage for incremental portions of work pursuant to Section 5-1.14 "Prompt Payment of Funds Withheld to Subcontractors," of these Special Provisions, or for acceptable materials pursuant to the first paragraph of said Section 9-1.06: (1) The County shall retain 10 percent of the estimated value of the work done and/or 10 percent of the estimated value of materials eligible for partial payment that has been furnished and delivered and unused or furnished and stored in accordance with the provisions in the first paragraph of Section 9-1.06 as part security for the fulfillment of the contract by the Contractor from each progress payment made; and (2) the County shall pay respective retained amount(s) with subsequent payments upon acceptance of portions of the work, as determined by the Engineer."

Section 9-1.065, "Payment of Withheld Funds," of the Standard Specifications is hereby amended to read: "Attention is directed to Section 9-1.06, "Partial Payments," of the Standard Specifications, to these Special Provisions and in particular to the retention provisions therein.

Upon the Contractor's request, the County will make payment to the Contractor of funds withheld to ensure performance of this contract if the Contractor, in accordance with Public Contract Code Section 22300, deposits in escrow with the County, or with a state or federally chartered bank in California securities equivalent to the amount withheld. Securities eligible for investment under this section shall include bank or savings and loan certificates of deposit, the securities enumerated in Government Code Section 16430, interest bearing demand deposit accounts, standby letters of credit, or any other security mutually agreed to by the Contractor and the County. Upon satisfactory completion of the contract, the securities shall be returned to the Contractor. Alternatively, the Contractor may request that the County make payment of retention earned directly to the escrow agent as provided in subdivision (b) of Section 22300 of the Public Contract Code.

Each of the following conditions shall apply to the deposit of securities into escrow:

(a) The Contractor shall bear the expense of the County and the escrow agent (either the County or the bank) in connection with the escrow deposit made.

(b) Securities or certificates of deposit to be placed in escrow shall be of a value at least equivalent to the amounts of retention to be paid to the Contractor pursuant to this section.

(c) The value of any securities placed in escrow shall be based upon the market value of such securities as of the date the securities are deposited in escrow, and not upon the face value of the securities. Such securities shall be valued by the County, whose decision on valuation of the securities shall be final.

(d) The escrow agreement shall provide that the escrow agent must convert the securities deposited therein for cash, in whole or in part, to meet the defaults by the Contractor upon a unilateral demand for such conversion by the Public Works Director, and further that any amount so demanded shall be paid to the County upon said unilateral demand for payment.

(e) The Contractor shall be the beneficial owner of any securities substituted for moneys withheld and shall receive any interest thereon.

(f) The Contractor shall enter into an escrow agreement satisfactory to the County, which agreement shall be substantially similar to the form set forth in Public Contract Code Section 22300. The Contractor shall obtain the written consent of the surety to such agreement. The Public Works Director is authorized to sign such escrow agreements on behalf of the County.

5-1.08 Determination of Disputes: Public Contract Code Sections 10240 through 10245.4 shall not be applicable to this contract. Section 9-1.10, "Arbitration," of the Standard Specifications is hereby deleted. All disputes and claims arising under or by virtue of this contract shall be directed to and be determined by the Public Works Director. The Public Works Director's determination of disputes and claims pursuant to these Special Provisions shall constitute the decision of the County; provided, however, that Article 1.5 (commencing with Section 20104) of Chapter 1 of Part 3 of Division 2 of the Public Contract Code shall apply to the public works claim of $375,000 or less. Article 1.5 provides as follows:

Article 1.5 Resolution of Construction Claims

20104. (a) (1) This article applies to all public works claims of three hundred seventy-five thousand dollars ($375,000) or less which arise between a contractor and a local agency. (2) This article shall not apply to any claims resulting from a contract between a contractor and a public agency when the public agency has elected to resolve any disputes pursuant to Article 7.1 (commencing with Section 10240) of Chapter 1 of Part 2.

(b) (1) "Public work" has the same meaning as in Sections 3100 and 3106 of the Civil Code, except that "public work" does not include any work or improvement contracted for by the state or the Regents of the University of California. (2) "Claim" means a separate demand by the Contractor for (A) a time extension,

(B) payment of money or damages arising from work done by, or on behalf of, the Contractor pursuant to the contract for a public work and payment of which is not otherwise expressly provided for or the claimant is not otherwise entitled to, or (C) an amount the payment of which is disputed by the local agency.

(c) The provisions of this article or a summary thereof shall be set forth in the plans or specifications for any work which may give rise to a claim under this article.

(d) This article applies only to contracts entered into on or after January 1, 1991.

20104.2. For any claim subject to this article, the following requirements apply: (a) The claim shall be in writing and include the documents necessary to substantiate the claim. Claims must be filed on or before the date of final payment. Nothing in this subdivision is intended to extend the time limit or supersede notice requirements otherwise provided by contract for the filing of claims.

(b) (1) For claims of less than fifty thousand dollars ($50,000), the local agency shall respond in writing to any written claim within 45 days of receipt of the claim, or may request, in writing, within 30 days of receipt of the claim, any additional documentation supporting the claim or relating to defenses to the claim the local agency may have against the claimant. (2) If additional information is thereafter required, it shall be requested and provided pursuant to this subdivision, upon mutual agreement of the local agency and the claimant. (3) The local agency's written response to the claim, as further documented, shall be submitted to the claimant within 15 days after receipt of the further documentation or within a period of time no greater than that taken by the claimant in producing the additional information, whichever is greater.

(c) (1) For claims of over fifty thousand dollars ($50,000) and less than or equal to three hundred seventy-five thousand dollars ($375,000), the local agency shall respond in writing to all written claims within 60 days of receipt of the claim, or may request, in writing, within 30 days of receipt of the claim, any additional documentation supporting the claim or relating to defenses to the claim the local agency may have against the claimant. (2) If additional information is thereafter required, it shall be requested and provided pursuant to this subdivision, upon mutual agreement of the local agency and the claimant. (3) The local agency's written response to the claim, as further documented, shall be submitted to the claimant within 30 days after receipt of the further documentation, or within a period of time no greater than that taken by the claimant in producing the additional information or requested documentation, whichever is greater.

(d) If the claimant disputes the local agency's written response, or the local agency fails to respond within the time prescribed, the claimant may so notify the local agency, in writing, either within 15 days of receipt of the local agency's response or within 15 days of the local agency's failure to respond within the time prescribed, respectively, and demand an informal conference to meet and

confer for settlement of the issues in dispute. Upon a demand, the local agency shall schedule a meet and confer conference within 30 days for settlement of the dispute.

(e) Following the meet and confer conference, if the claim or any portion remains in dispute, the claimant may file a claim as provided in Chapter 1 (commencing with Section 900) and Chapter 2 (commencing with Section 910) of Part 3 of Division 3.6 of Title 1 of the Government Code. For purposes of those provisions, the running of the period of time within which a claim must be filed shall be tolled from the time the claimant submits his or her written claim pursuant to subdivision (a) until the time that claim is denied as a result of the meet and confer process, including any period of time utilized by the meet and confer process.

(f) This article does not apply to tort claims and nothing in this article is intended nor shall be construed to change the time periods for filing tort claims or actions specified by Chapter 1 (commencing with Section 900) and Chapter 2 (commencing with Section 910) of Part 3 of Division 3.6 of Title 1 of the Government Code.

20104.4. The following procedures are established for all civil actions filed to resolve claims subject to this article:

(a) Within 60 days, but no earlier than 30 days, following the filing or responsive pleadings, the court shall submit the matter to nonbinding mediation unless waived by mutual stipulation of both parties. The mediation process shall provide for the selection within 15 days by both parties of a disinterested third person as mediator, shall be commenced within 30 days of the submittal, and shall be concluded within 15 days from the commencement of the mediation unless a time requirement is extended upon a good cause showing to the court or by stipulation of both parties. If the parties fail to select a mediator within the 15-day period, any party may petition the court to appoint the mediator.

(b) (1) If the matter remains in dispute, the case shall be submitted to judicial arbitration pursuant to Chapter 2.5 (commencing with Section 1141.10) of Title 3 of Part 3 of the Code of Civil Procedure, notwithstanding Section 1141.11 of that code. The Civil Discovery Act of 1986 (Article 3 (commencing with Section 2016) of Chapter 3 of Title 3 of Part 4 of the Code of Civil Procedure) shall apply to any proceeding brought under this subdivision consistent with the rules pertaining to judicial arbitration. (2) Notwithstanding any other provision of law, upon stipulation of the parties, arbitrators appointed for purposes of this article shall be experienced in construction law, and, upon stipulation of the parties, mediators, and arbitrators shall be paid necessary and reasonable hourly rates of pay not to exceed their customary rate, and such fees and expenses shall be paid equally by the parties, except in the case of arbitration where the arbitrator, for good cause, determines a different division. In no event shall these fees or expenses be paid by state or county funds. (3) In addition to Chapter 2.5 (commencing with Section 1141.10) of Title 3 of Part 3 of the Code of Civil

Procedure, any party who after receiving an arbitration award requests a trial de novo but does not obtain a more favorable judgment shall, in addition to payment of costs and fees under that chapter, pay the attorney's fees of the other party arising out of the trial de novo.

(c) The court may, upon request by any party, order any witnesses to participate in the mediation or arbitration process.

20104.6. (a) No local agency shall fail to pay money as to any portion of a claim which is undisputed except as otherwise provided in the contract.

(b) In any suit filed under Section 20104.4, the local agency shall pay interest at the legal rate on any arbitration award or judgment. The interest shall begin to accrue on the date the suit is filed in a court of law.

5-1.09 Audit of Records: The Contractor shall maintain and make available for examination and audit by the State Auditor General and/or duly authorized representatives of the State, County, or Federal Governments, all books, papers, accounting records, and other documents pertaining to the cost and performance of this contract.

The Contractor shall retain said books, papers, accounting records, and other documents for a period of three years after the date of final payment under this contract (Government Code Section 8546.7).

5-1.10 Contractor's Reports: The Contractor shall complete a daily report indicating location worked, total manpower per construction trade for each task, major equipment on site, each subcontractor's manpower and equipment, weather conditions, and other related information involved in the performance of the work. The daily report shall be completed on forms furnished by the Engineer and shall be submitted to the Engineer at the conclusion of each workday. The report shall comment on the daily progress and status of the work within each major component of the work.

5-1.11 Removal of Asbestos and Hazardous Substances: When the presence of asbestos or hazardous substances are not shown on the plans or indicated in the specifications and the Contractor encounters materials which the Contractor reasonably believes to be asbestos or a hazardous substance as defined in Section 25914.1 of the Health and Safety Code, and the asbestos or hazardous substance has not been rendered harmless, the Contractor may continue work in unaffected areas reasonably believed to be safe. The Contractor shall immediately cease work in the affected area and report the condition to the Engineer in writing.

In conformance with Section 25914.1 of the Health and Safety Code, removal of asbestos or hazardous substances including exploratory work to identify and determine the extent of the asbestos or hazardous substance will be performed by separate contract.

If delay of work in the area delays the current controlling operation, the delay will be considered a right of way delay and the Contractor will be compensated for the delay in conformance with the provisions in Section 8-1.09, "Right of Way Delays," of the Standard Specifications.

5-1.12 Subcontractor and DBE Records: The Contractor shall maintain records showing the name and business address of each first-tier subcontractor. The records shall also show the name and business address of every DBE subcontractor, DBE vendor of materials, and DBE trucking company, regardless of tier. The records shall show the date of payment and the total dollar figure paid to all of these firms. DBE prime contractors shall also show the date of work performed by their own forces along with the corresponding dollar value of the work.

Upon completion of the contract, a summary of these records shall be prepared on "Final Report – Utilization of Disadvantaged Business Enterprises – DBE), First-Tier Subcontractors" Form CEM-2402 and certified correct by the Contractor or the Contractor's authorized representative, and shall be furnished to the Engineer. The form shall be furnished to the Engineer within 90 days from the date of contract acceptance. The amount of $10,000 will be withheld from payment until a satisfactory form is submitted.

Prior to the fifteenth of each month, the Contractor shall submit documentation to the Engineer showing the amount paid to DBE trucking companies. The Contractor shall also obtain and submit documentation to the Engineer showing the amount paid by DBE trucking companies to all firms, including owner-operators, for the leasing of trucks. If the DBE leases trucks from a non-DBE, the Contractor is entitled to credit only for the fee or commission the DBE receives as a result of the lease arrangement.

The Contractor shall also obtain and submit documentation to the Engineer showing the truck number, owner's name, California Highway Patrol CA number, and if applicable, the DBE certification number of the owner of the truck for all trucks used during that month. This documentation shall be submitted on "Monthly DBE Trucking Verifications" Form CEM-2404 (F).
The following is a copy of the "Final Report – Utilization of Disadvantaged Business Enterprises – DBE), First-Tier Subcontractors" Form CEM-2402.

Revised 9/09

STATE OF CALIFORNIA - DEPARTMENT OF TRANSPORTATION

FINAL REPORT-UTILIZATION OF DISADVANTAGED BUSINESS ENTERPRISES (DBE), FIRST-TIER SUBCONTRACTORS

ADA Notice

For individuals with sensory disabilities, this document is available in alternate formats. For information call (916) 654-6410 or TDD (916) 654-3880 or write Records and Forms Management, 1120 N Street, MS-89, Sacramento, CA 95814

CEM-2402F (REV 02/2008)

CONTRACT NUMBER	COUNTY	ROUTE	POST MILES	FEDERAL AID PROJECT NO.	ADMINISTERING AGENCY	CONTRACT COMPLETION DATE

PRIME CONTRACTOR	BUSINESS ADDRESS	ESTIMATED CONTRACT AMOUNT $

ITEM NO.	DESCRIPTION OF WORK PERFORMED AND MATERIAL PROVIDED	COMPANY NAME AND BUSINESS ADDRESS	DBE CERT. NUMBER	CONTRACT PAYMENTS						DATE WORK COMPLETE	DATE OF FINAL PAYMENT
				NON-DBE	DBE	BA UDBE	APA UDBE	NA UDBE	W UDBE		
				$	$	$	$	$	$		
				$	$	$	$	$	$		
				$	$	$	$	$	$		
				$	$	$	$	$	$		
				$	$	$	$	$	$		
				$	$	$	$	$	$		
				$	$	$	$	$	$		
				$	$	$	$	$	$		
				$	$	$	$	$	$		
				$	$	$	$	$	$		
				$	$	$	$	$	$		
				$	$	$	$	$	$		
				$	$	$	$	$	$		
				$	$	$	$	$	$		
				$	$	$	$	$	$		
				$	$	$	$	$	$		
			TOTAL	$	$	$	$	$	$		

ORIGINAL COMMITMENT

$_____

UDBE

BA- Black American
APA- Asian-Pacific Islander
NA-Native American
W-Woman

List all First-Tier Subcontractors, Disadvantaged Business Enterprises (DBEs) and underutilized DBEs (UDBEs) regardless of tier, whether or not the firms were originally listed for goal credit.
If actual UDBE utilization (or item of work) was different than that approved at time of award, provide comments on back of form. List actual amount paid to each entity.

I CERTIFY THAT THE ABOVE INFORMATION IS COMPLETE AND CORRECT

CONTRACTOR REPRESENTATIVE'S SIGNATURE	BUSINESS PHONE NUMBER	DATE

TO THE BEST OF MY INFORMATION AND BELIEF, THE ABOVE INFORMATION IS COMPLETE AND CORRECT

RESIDENT ENGINEER'S SIGNATURE	BUSINESS PHONE NUMBER	DATE

Copy Distribution-Caltrans contracts: **Original** - District Construction; **Copy-** Business Enterprise Program; **Copy-** Contractor; **Copy** Resident Engineer

Copy Distribution-Local Agency contracts: **Original** - District Local Assistance Engineer (submitted with the Report of Expenditure); **Copy-** District Local Assistance Engineer; **Copy-** Local Agency file

5-1.13 DBE Certification Status: If a DBE subcontractor is decertified during the life of the project, the decertified subcontractor shall notify the Contractor in writing with the date of decertification. If a subcontractor becomes a certified DBE during the life of the project, the subcontractor shall notify the Contractor in writing with the date of certification. The Contractor shall furnish the written documentation to the Engineer.

Upon completion of the contract, "Disadvantaged Business Enterprises (DBE) Certification Status Change" Form CEM-2403(F) indicating the DBE's existing certification status shall be signed and certified correct by the Contractor. The certified form shall be furnished to the Engineer within 90 days from the date of contract acceptance.

The following is a copy of the "Disadvantaged Business Enterprises (DBE) Certification Status Change" Form CEM-2403(F). Revised 9/09

STATE OF CALIFORNIA – DEPARTMENT OF TRANSPORTATION

DISADVANTAGED BUSINESS ENTERPRISES (DBE) CERTIFICATION STATUS CHANGE

CP-CEM-2403(F) (New. 10/99)

CONTACT NUMBER	COUNTY	ROUTE	POST MILES	ADMINISTERING AGENCY	CONTRACT COMPLETION DATE
PRIME CONTRACTOR			BUSINESS ADDRESS		ESTIMATED CONTRACT AMOUNT

Prime Contractor: List all DBEs with changes in certification status (certified/decertified) while in your employ, whether or not firms were originally listed for good credit. Attach DBE certification/Decertification letter in accordance with the Special Provisions

CONTRACT ITEM NO.	SUBCONTRACT NAME AND BUSINESS ADDRESS	BUSINESS PHONE	CERTIFICATION NUMBER	AMOUNT PAID WHILE CERTIFIED	CERTIFICATION/ DECERTIFICATION DATE Letter attached
				$	
				$	
				$	
				$	
				$	
				$	
				$	
				$	
				$	

Comments:

I CERTIFY THAT THE ABOVE INFORMATION IS COMPLETE AND CORRECT

CONTRACTOR REPRESENTATIVE SIGNATURE	TITLE	BUSINESS PHONE NUMBER	DATE

TO THE BEST OF MY KNOWLEDGE, THE ABOVE INFORMATION IS COMPLETE AND CORRECT

RESIDENT ENGINEER	BUSINESS PHONE NUMBER	DATE

Distribution Original copy -DLAE
Copy -1) Business Enterprise Program 2) Prime Contactor 3) Local Agency 4) Resident Engineer

5-1.14 Performance of Subcontractors: The subcontractors listed by the Contractor in conformance with Section 2-2.01, "Required Listing of Proposed Subcontractors," of the Standard Specifications, shall perform the work for which they are listed, unless the Contractor has received prior written authorization to perform the work with other forces. Revised 8/09

UDBEs shall be listed by the Contractor in the "UDBE COMMITMENT" form specified under Section 2, "Proposed Requirements and Conditions," of these Special Provisions. The Contractor shall not terminate a UDBE listed subcontractor, reduce its work or obtain materials from other sources without prior written authorization from the County. Revised 8/09

Authorization to use other forces or sources of materials may be requested for the following reasons:

1. The listed UDBE, after having had a reasonable opportunity to do so, fails or refuses to execute a written contract, when such written contract, based upon the general terms, conditions, plans, and specifications for the project, or on the terms of such subcontractor's or supplier's written bid, is presented by the Contractor.

2. The Contractor stipulated that a bond was a condition of executing a subcontract and the listed UDBE fails or refuses to meet the bond requirements of the Contractor.

3. The work performed requires a contractors license and the listed UDBE does not have a valid contractors license under Contractors License Law.

4. The listed UDBE fails or refuses to perform the subcontract or furnish the listed materials.

5. The work performed by the listed UDBE is substantially unsatisfactory and is not in substantial conformance with the plans and specifications

6. The listed UDBE substantially delays or disrupts the progress of the work.

7. The listed UDBE becomes bankrupt or insolvent.

In conformance with the Federal DBE regulations Sections 26.53(f)(1) and 26.53(f)(2) Part 26, Title 49 CFR:

A. The Contractor shall not terminate for convenience a UDBE subcontractor listed in response to Section 2-2.03A, "UDBE Commitment Submittal," of these Special Provisions and then perform that work with its own forces, or those of an affiliate without the prior written consent of the Engineer.

B. If a UDBE subcontractor is terminated or fails to complete its work for any reason, the Contractor will be required to make good faith efforts to substitute another UDBE subcontractor for the original UDBE subcontractor, to the extent needed to meet the contract goal. Good faith efforts must adhere to Section 2-2.03B, "UDBE Good Faith Effort Submittal" of these Special Provisions. Revised 8/09

If a listed UDBE subcontractor is terminated, the Contractor shall make good faith efforts to find another UDBE subcontractor to substitute for the original UDBE. The substitute UDBE must perform at least the amount of work as the original UDBE under the contract to the extent needed to meet the UDBE goal.

The substitute UDBE must be certified as a DBE at the time the Contractor requests substitution.

The Contractor shall not be entitled to any payment for such work or material unless it is performed or supplied by the listed UDBE, unless the UDBE is terminated in accordance with this section. Revised 8/09

5-1.15 Subcontracting: No subcontract releases the Contractor from the contract or relieves the Contractor of their responsibility for a subcontractor's work.

If the Contractor violates Public Contract Code §4100 et seq., the County may exercise the remedies provided under violates Public Contract Code §4100. The County may refer the violation to the Contractors State License Board as provided under Public Contract Code §4111.

The Contractor shall perform work equaling at least 30 percent of the value of the original total bid with the Contractor's own employees and equipment, owned or rented, with or without operators.

Each subcontract shall comply with the contract.

Each subcontractor shall have an active and valid State contractor's license with a classification appropriate for the work to be performed (Business and Professions Code, §7000 et seq.).

The Contractor shall submit copies of subcontracts upon request by the Engineer.

The Contractor shall submit a Subcontracting Request form prior to commencement of that portion of the work.

The Contractor shall not use a debarred subcontractor. Pursuant to the provisions in Section 1777.1 of the Labor Code, the Labor Commissioner publishes and distributes a list of contractors ineligible to perform work as a subcontractor on a public works project. This list of debarred contractors is available from the Department of Industrial Relations web site at:

http://www.dir.ca.gov/DLSE/Debar.html.

Upon request by the Engineer, the Contractor shall immediately remove and not again use a subcontractor who fails to prosecute the work satisfactorily.

Each subcontract and any lower tier subcontract that may in turn be made shall include Section 7, "Federal Requirements for Federal-Aid Construction Projects," of these Special Provisions. Noncompliance shall be corrected. Payment for subcontracted work involved will be withheld from progress payments due, or to become due, until correction is made. Failure to comply may result in termination of the contract.

5-1.16 Prompt Progress Payment to Subcontractors: A prime contractor or subcontractor shall pay any subcontractor not later than 10 days of receipt of each progress payment in accordance with the provision in Section 7108.5 of the California Business and Professions Code concerning prompt payment to subcontractors. The 10 days is applicable unless a longer period is agreed to in writing. Any delay or postponement of payment over 30 days may take place only for good cause and with the County's prior written approval. Any violation of Section 7108.5 shall subject the violating contractor or subcontractor to the penalties, sanctions, and other remedies of that section. This requirement shall not be construed to limit or impair any contractual, administrative, or judicial remedies otherwise available to the prime contractor or subcontractor in the event of a dispute involving late payment or nonpayment by the prime contractor, deficient subcontract performance, or noncompliance by a subcontractor. This provision applies to both DBE and non-DBE prime contractors and subcontractors.

5-1.17 Prompt Payment of Funds Withheld to Subcontractors: The County shall hold retainage from the prime contractor and shall make prompt and regular incremental acceptances of portions, as determined by the County, of the contract work, and pay retainage to the prime contractor based on these acceptances. The prime contractor or subcontractor shall return all monies withheld in retention from a subcontractor within 30 days after receiving payment for work satisfactorily completed and accepted including incremental acceptances of portions of the contract work by the County. Federal law (49CFR26.29) requires that any delay or postponement of payment over 30 days may take place only for good cause and with the County's prior written approval. Any violation of this provision shall subject the violating prime contractor or subcontractor to the penalties, sanctions, and other remedies specified in Section 7108.5 of the California Business and Professions Code. These requirements shall not be construed to limit or impair any contractual,

administrative, or judicial remedies otherwise available to the prime contractor or subcontractor in the event of a dispute involving late payment or nonpayment by the prime contractor, deficient subcontract performance, or noncompliance by a subcontractor. This provision applies to both DBE and non-DBE prime contractors and subcontractors.

5-1.18 Buy America Requirements: Attention is directed to the "Buy America" requirements of the Surface Transportation Assistance Act of 1982 (Section 165) and the Intermodal Surface Transportation Efficiency Act of 1991 (ISTEA) Sections 1041(a) and 1048(a), and the regulations adopted pursuant thereto. In conformance with said law and regulations, all manufacturing processes for steel and iron materials furnished for incorporation into the work on this project shall occur in the United States; with the exception that pig iron and processed, pelletized and reduced iron ore manufactured outside of the United States may be used in the domestic manufacturing process for such steel and iron materials. The application of coatings, such as epoxy coating, galvanizing, painting, and other coatings that protect or enhance the value of steel or iron materials shall be considered a manufacturing process subject to the "Buy America" requirements.

A Certificate of Compliance conforming to the provisions in Section 6-1.07, "Certificates of Compliance," of the Standard Specifications shall be furnished for steel and iron materials. The certificates, in addition to certifying that the materials comply with the specifications, shall specifically certify that all manufacturing processes for the materials occurred in the United States, except for the above exceptions.

The requirements imposed by the law and regulations do not prevent a minimal use of foreign steel and iron materials if the total combined cost of the materials used does not exceed one-tenth of one percent (0.1 percent) of the total contract cost or $2,500, whichever is greater. The Contractor shall furnish the Engineer acceptable documentation of the quantity and value of the foreign steel and iron prior to incorporating the materials into the work.

5-1.19 Submittals: Submittals and shop drawings shall be supplied for all material and equipment items. The Contractor shall supply 5 copies of manufacturer's scaled, dimensioned shop drawings complete with all information required to describe the item and demonstrate compliance with contract drawings and these specifications. Neither fabrication nor onsite preparation shall be started before receipt of written review from the County.

Each submittal shall be sequentially numbered, dated, and appropriately titled with the specification number and description.

The Contractor's responsibility for errors, omissions, and deviations from the requirements of the contract documents in submittals is not relieved by the County's review. The County will require 10 days for submittal review. No claim will be allowed for damages or extensions of time because of delays in work

resulting from rejection of material or from revisions and resubmittal of shop drawings, project data, or samples.

Full compensation for preparing submittals and shop drawings, as required, shall be considered as included in the contract items of work involved and no additional compensation will be allowed therefor.

5-1.20 Means and Methods: The Engineer will not have control over, be in charge of, nor be responsible for construction means, methods, techniques, sequences, or procedures, or for the safety precautions and programs in connection with the work, since these are solely Contractor's responsibility, unless otherwise required by the Contract Documents.

5-1.21 Legal Address of the Contractor: Both the address given in the proposal and the Contractor's office in the vicinity of the work are hereby designated as places to either of which drawings, letters, notices, or other articles or communications to the Contractor may be mailed, transmitted electronically, or delivered. The mailing, electronic transmission, or delivery at either of these places shall be deemed sufficient notice thereof upon the Contractor.

Nothing herein contained shall be deemed to preclude the service of any drawing, letter, notice, article, or communication to, or upon, the Contractor or Contractor's representative personally. The address named in the proposal may be changed at any time by written notice from the Contractor to the Engineer.

5-1.22 Weekly Progress Meetings: Weekly meetings shall be held at the project site to review the progress of the work and to discuss any problems which may have occurred. Meeting shall include the Engineer, inspectors, and the Contractor's foreman. The Contractor shall provide an updated schedule at the weekly meeting.

Full compensation for preparing updated schedules and attending the progress meetings, as required, shall be considered as included in the contract items of work involved and no additional compensation will be allowed therefor.

5-1.23 Solid Waste Management: For the purpose of complying with San Luis Obispo County Code, Title 8, Health and Sanitation, Chapter 8.12, "Solid Waste Management," the Contractor shall recycle at least 50% of the construction and demolition waste generated by the project.

The following is a list of IWMA-Certified Recycling Facilities:

C&D Recycling Facility at Cold Canyon Landfill	805-549-8332
C&D Recycling Facility at Chicago Grade Landfill	805-466-2985
North SLO County Recycling	805-434-0043
API (roll-off/debris box company)	805-928-8689
R&R (a roll-off/debris box company)	805-929-8000
Recycling Facility at the Paso Robles Landfill	805-238-2028
Santa Maria Transfer Station	805-922-9255
Bedford Enterprises/SMART	805-922-4977

The Contractor shall complete and sign the "RECYCLING PLAN" form in conformance with the provisions in Section 4-1.03, "Submittals," of these Special Provisions. This form must be submitted and approved prior to receiving the Notice to Proceed.

This form must show how at least 50% of the project construction and demolition waste will be recycled.

The Contractor shall maintain receipts or other documentation for any facility or site that received waste from the project.

The Contractor shall submit a complete and accurate "DISPOSAL REPORT" form with original receipts and supporting documentation. This form must be submitted and approved prior to receiving the Notice of Completion.

If the Contractor fails to submit the required information showing the 50% recycling goal was met, the County could impose a penalty equal to 2 percent of the total contract amount.

Full compensation for complying with these requirements shall be considered as included in the prices paid for the various items of work generating such construction and demolition waste and no additional compensation will be allowed therefor.

The following are copies of the "RECYCLING PLAN" and "DISPOSAL REPORT" forms:

Revised 1/10

RECYCLING PLAN FOR COUNTY PROJECTS

SECTION 1. PROJECT INFORMATION

Contract Title	Contractor Name	
	Contractor Phone	Contractor Fax
Contract Number	Street Address	
Total Contract Amount	City, State, Zip	
Print Name and Title	Signature	Date

SECTION 2. RECYCLING PLAN

	Before Construction (estimated tons)				
	Landfill	Recycling Facility		Reuse	
Materials	(Tons)	(Tons)	Location	(Tons)	Location
Cleared Vegetation					
Asphalt Concrete					
Concrete					
Metals (including spent equipment)					
Lumber					
Drywall					
Mixed Recyclables					
Trash					
Totals					
% Diversion					

Official Use Only

Recycling Plan Approved ☐	Recycling Plan Denied ☐

Information Required:

Print Name and Title	Signature	Date

DISPOSAL REPORT FOR COUNTY PROJECTS

SECTION 1. PROJECT INFORMATION

Contract Title	Contractor Name	
	Contractor Phone	Contractor Fax
Contract Number	Street Address	
Total Contract Amount	City, State, Zip	

Contractor Certification: I certify under penalty of perjury that the information provided in this form is complete and accurate.

Print Name and Title	Signature	Date

SECTION 2. DISPOSAL REPORT

	After Construction (actual tons)				
	Landfill	Recycling Facility		Reuse	
Materials	(Tons)	(Tons)	Location	(Tons)	Location
Cleared Vegetation					
Asphalt Concrete					
Concrete					
Metals (including spent equipment)					
Lumber					
Drywall					
Mixed Recyclables					
Trash					
Totals					
% Diversion					

I have reviewed and approved the information submitted in this report for completeness

Resident Engineer's Name:	Signature:	Date:

Official Use Only

Disposal Report Approved ☐	Disposal Report Denied ☐

Information Required

Print Name and Title	Signature	Date

5-1.24 Area for Contractor's Use: Attention is directed to the provisions in Section 7-1.19, "Rights in Land and Improvements," of the Standard Specifications and these Special Provisions.

The County right of way shall be used only for purposes that are necessary to perform the required work. The Contractor shall not occupy the right of way, or allow others to occupy the right of way, for purposes which are not necessary to perform the required work.

No County-owned parcels adjacent to the right of way are available for the exclusive use of the Contractor within the contract limits. The Contractor shall secure, at the Contractor's own expense, areas required for plant sites, storage of equipment or materials, or for other purposes.

No area is available within the contract limits for the exclusive use of the Contractor. However, temporary storage of equipment and materials on County property may be arranged with the Engineer, subject to the prior demands of County maintenance forces and to other contract requirements. Use of the Contractor's work areas and other County-owned property shall be at the Contractor's own risk, and the County shall not be held liable for damage to or loss of materials or equipment located within such areas. Residence trailers will not be allowed within the County right of way, except that one trailer will be allowed for yard security purposes.

The Contractor shall remove equipment, materials, and rubbish from the work areas and other County-owned property which the Contractor occupies. The Contractor shall leave the areas in a presentable condition in conformance with the provisions in Section 4-1.02, "Final Cleaning Up," of the Standard Specifications.

The Contractor shall secure, at the Contractor's own expense, areas required for plant sites, storage of equipment or materials or for other purposes, if sufficient area is not available to the Contractor within the contract limits.

5-1.25 Sound Control Requirements: Sound control shall conform to the provisions in Section 7-1.01I, "Sound Control Requirements," of the Standard Specifications and these Special Provisions.

The noisiest construction operations, such as pile driving, shall not occur within 2,500 feet of residential lands uses before 7 a.m. or after 9 p.m. Monday thru Friday, or before 8 a.m. or after 5 p.m. on Saturday and Sunday. The noise level from the Contractor's operations, between the hours of 9:00 p.m. and 6:00 a.m., shall not exceed 86 dBa at a distance of 50 feet. This requirement shall not relieve the Contractor from responsibility for complying with local ordinances regulating noise level.

The noise level requirement shall apply to the equipment on the job or related to the job, including but not limited to trucks, transit mixers or transient equipment

that may or may not be owned by the Contractor. The use of loud sound signals shall be avoided in favor of light warnings except those required by safety laws for the protection of personnel.

Full compensation for conforming to the requirements of this section shall be considered as included in the prices paid for the various contract items of work involved and no additional compensation will be allowed therefor.

5-1.26 Relations with California Department of Fish and Game: A portion of this project is located within the jurisdiction of the California Department of Fish and Game. An agreement regarding a stream or lake has been entered into by the County and the Department of Fish and Game. The Contractor shall be fully informed of the requirements of this agreement as well as rules, regulations, and conditions that may govern the Contractor's operations in these areas and shall conduct the work accordingly.

A copy of the agreement is included in Attachment B of these Special Provisions. It is unlawful for any person to divert, obstruct or change the natural flow of the bed, channel or bank of a stream, river or lake without first notifying the Department of Fish and Game, unless the project or activity is noticed and constructed in conformance with conditions imposed under Fish and Game Code Section 1602.

Attention is directed to Sections 7-1.01, "Laws to be Observed," 7-1.01G, "Water Pollution," and 7-1.12, "Indemnification and Insurance," of the Standard Specifications.

Modifications to the agreement between the County and the Department of Fish and Game which are proposed by the Contractor shall be submitted in writing to the Engineer for transmittal to the Department of Fish and Game for their consideration.

When the Contractor is notified by the Engineer that a modification to the agreement is under consideration, no work shall be performed which is inconsistent with the original agreement or proposed modification until the County and Department of Fish and Game take action on the proposed modifications. Compensation for delay will be determined in conformance with the provisions in Section 8-1.09, "Right of Way Delays," of the Standard Specifications.

The provisions of this section shall be made a part of every subcontract executed pursuant to this contract.

Modifications to any agreement between the County and the Department of Fish and Game will be fully binding on the Contractor. The provisions of this section shall be made a part of every subcontract executed pursuant to this contract.

* Payment for compliance with the provisions in the Fish and Game agreement shall be considered as included in the contract items of work involved and no separate payment will be made therefor.

5-1.27 Trench Safety: Attention is directed to Section 7-1.01E, "Trench Safety" of the Standard Specifications and these Special Provisions.

Contractor shall submit a detailed plan in advance of any trench excavation work as part of this contract showing the design of shoring, bracing, sloping or other provisions for worker protection from the potential hazard of caving ground resulting from excavation of any trench or trenches over five (5) feet in depth. The detailed plan must be prepared by a registered civil engineer or structural engineer if the design varies from the shoring system standards required by the Construction Safety Orders.

Payment for compliance with the requirements of "Trench Safety" shall be considered as included in the contract items of work involved and no separate payment will be made therefor.

5-1.28 Environmentally Sensitive Area: An Environmentally Sensitive Area (ESA) exists on this project.

Before start of work, protect the ESA by installing temporary fence (Type ESA).

5-1.29 Non-highway Facilities (Including Utilities): The utility owner will relocate a utility shown in the following table before the corresponding date shown:

Utility Relocation and Date of the Relocation

Utility	Contact	Location	Date
Nipomo CSD	Peter Sevcik, (805) 929-1133	Price St/Thompson Ave	Jun-2010
Gas	Claudia Turner, (805) 681-8024	Price St/Thompson Ave	Jun-2010

During the progress of the work under this Contract, the utility owner will relocate a utility shown in the following table within the corresponding number of days shown.

Notify the Engineer before you work within the approximate location of a utility shown. The days start on the notification date.

Utility Relocation and Department-Arranged Time for the Relocation

Utility	Contact	Location	Days
Charter	Bruce Jensen, (805) 783-4950	Price St/Thompson Ave	5

Installation of the utilities shown in the following table requires coordination with your activities. Make the necessary arrangements with the utility company through the Engineer and submit a schedule:

1. Verified by a representative of the utility company
2. Allowing at least the time shown for the utility owner to complete its work

SECTION 6. FEDERAL MINIMUM WAGES

Attention is directed to Section 7, "Federal Requirements for Federal-Aid Construction Projects", of these Special Provisions, to the Notice to Bidders for this contract; and Decision No. CA20100019 of the Secretary of Labor, included herein.

GENERAL WAGE DETERMINATIONS
ISSUE UNDER THE DAVIS-BACON
AND RELATED ACTS

GENERAL DECISION: CA20100019 04/16/2010 CA19

Date: April 16, 2010
General Decision Number: CA20100019 04/16/2010

Superseded General Decision Number: CA20080019

State: California

Construction Types: Building, Heavy (Heavy and Dredging) and Highway

County: San Luis Obispo County in California.

BUILDING, DREDGING (does not include hopper dredge work), HEAVY (does not include water well drilling, AND HIGHWAY CONSTRUCTION PROJECTS

Modification Number	Publication Date
0	03/12/2010
1	03/26/2010
2	04/02/2010
3	04/16/2010

ASBE0005-002 01/01/2010

	Rates	Fringes
Asbestos Workers/Insulator (Includes the application of all insulating materials, protective coverings, coatings, and finishes to all types of mechanical systems)	$ 32.93	15.32
Fire Stop Technician (Application of Firestopping Materials for wall openings and penetrations in walls, floors, ceilings and curtain walls)	$ 24.21	13.76

ASBE0005-004 01/01/2010

	Rates	Fringes
Asbestos Removal worker/hazardous material handler (Includes preparation, wetting, stripping, removal, scrapping, vacuuming, bagging and disposing of all insulation materials from mechanical systems, whether they contain asbestos or not)	$ 18.85	8.03

BOIL0092-004 10/01/2009

Area within a 25 mile radius of City of Santa Maria

	Rates	Fringes
BOILERMAKER	$ 40.22	22.26

BOIL0549-007 01/01/2009

Remainder of County outside a 25 mile radius of City of Santa Maria

	Rates	Fringes
BOILERMAKER	$ 37.01	22.25

BRCA0004-006 05/01/2009

	Rates	Fringes
BRICKLAYER; MARBLE SETTER	$ 35.20	10.60

BRCA0018-008 06/01/2008

	Rates	Fringes
MARBLE FINISHER	$ 25.52	9.08
TILE FINISHER	$ 21.07	7.88

BRCA0018-011 08/01/2009

	Rates	Fringes
TILE LAYER	$ 30.04	10.84

CARP0409-001 07/01/2009

	Rates	Fringes
CARPENTER		
(1) Carpenter, Cabinet Installer, Insulation Installer, Hardwood Floor Worker and acoustical installer	$ 37.35	10.58
(2) Millwright	$ 37.85	10.58
(3) Piledriver/Derrick Bargeman, Bridge or Dock Carpenter, Heavy Framer, Rock Bargeman or Scowman, Rockslinger, Shingler (Commercial)	$ 37.48	10.58
(4) Pneumatic Nailer, Power Stapler	$ 37.60	10.58
(5) Sawfiler	$ 37.44	10.58
(6) Scaffold Builder	$ 28.55	10.58
(7) Table Power Saw Operator	$ 37.45	10.58

FOOTNOTE: Work of forming in the construction of open cut sewers or storm drains, on operations in which horizontal lagging is used in conjunction with steel H-Beams driven or

placed in pre- drilled holes, for that portion of a lagged trench against which concrete is poured, namely, as a substitute for back forms (which work is performed by piledrivers): $0.13 per hour additional. Certified Welder - $1.00 per hour premium.

CARP0409-005 07/01/2009

	Rates	Fringes
Drywall		
DRYWALL INSTALLER/LATHER....	$ 37.35	10.58
STOCKER/SCRAPPER.....	$ 10.00	6.67

CARP0409-008 07/01/2008

	Rates	Fringes
Modular Furniture Installer.....	$ 19.00	7.41

ELEC0011-002 02/01/2010

COMMUNICATIONS AND SYSTEMS WORK

	Rates	Fringes
Communications System		
Installer.....	$ 26.99	3%+8.64
Technician.....	$ 28.79	3%+8.64

SCOPE OF WORK:
Installation, testing, service and maintenance of systems utilizing the transmission and/or transference of voice, sound, vision and digital for commercial, educational, security and entertainment purposes for the following: TV monitoring and surveillance, background-foreground music, intercom and telephone interconnect, inventory control systems, microwave transmission, multi-media, multiplex, nurse call systems, radio page, school intercom and sound, burglar alarms, fire alarm (see last paragraph below) and low voltage master clock systems in commercial buildings. Communication Systems that transmit or receive information and/or control systems that are intrinsic to the above listed systems; inclusion or exclusion of terminations and testings of conductors determined by their function; excluding all other data systems or multiple systems which include control function or power supply; excluding installation of raceway systems, conduit systems, line voltage work, and energy management systems. Does not cover work performed at China Lake Naval Ordnance Test Station. Fire alarm work shall be performed at the current inside wireman total cost package.

ELEC0639-001 06/01/2009

	Rates	Fringes
Electricians		
Wireman/Technician.....	$ 32.20	3%+15.25

FOOTNOTES:

CABLE SPLICER: 10% additional per hour above Wireman/Technician basic hourly rate.

Work from trusses, swinging scaffolds, open ladders, scaffolds, bosun chairs, stacks or towers, where subject to a direct fall from the ground floor or support structure from a distance of fifty (50) feet to ninety (90) feet: to be paid time and one-half. Work from trusses, swinging scaffolds, open ladders, scaffolds, bosun chairs, stacks or towers, where subject to a direct fall from the ground floor or support structure from a distance over ninety (90) feet: to be paid double the regular straight time rate of pay. Where workers are required to work under compressed air or in areas where injurious gases, dust or fumes are present in amounts necessitating the use of gas masks or self-contained breathing apparatus (particle masks are not considered self-contained breathing apparatus) or where workers work on poles at a distance of seventy-five (75) feet or more from the ground: to be paid a bonus of straight time pay. This shall be at a minimum of one hour, and thereafter, each succeeding hour or fraction thereof shall constitute an hour at the bonus rate. Tunnel work: to be paid at the time and one-quarter hourly rate.

ELEC1245-001 06/01/2009

	Rates	Fringes
LINE CONSTRUCTION		
(1) Lineman; Cable splicer..	$ 44.47	13.11
(2) Equipment specialist (operates crawler tractors, commercial motor vehicles, backhoes, trenchers, cranes (50 tons and below), overhead & underground distribution line equipment).....	$ 35.52	12.07
(3) Groundman.....	$ 27.17	11.82
(4) Powderman.....	$ 39.71	12.23

HOLIDAYS: New Year's Day, M.L. King Day, Memorial Day, Independence Day, Labor Day, Veterans Day, Thanksgiving Day and day after Thanksgiving, Christmas Day

---

ELEV0008-003 01/01/2010

	Rates	Fringes
ELEVATOR MECHANIC.....	$ 54.89	20.035

FOOTNOTE:

PAID VACATION: Employer contributes 8% of regular hourly rate as vacation pay credit for employees with more than 5 years of service, and 6% for 6 months to 5 years of service.
PAID HOLIDAYS: New Years Day, Memorial Day, Independence Day, Labor Day, Veterans Day, Thanksgiving Day, Friday after Thanksgiving, and Christmas Day.

ENGI0012-003 07/01/2009

	Rates	Fringes
OPERATOR: Power Equipment (All Other Work)		
GROUP 1	$ 36.83	17.22
GROUP 2	$ 37.61	17.22
GROUP 3	$ 37.90	17.22
GROUP 4	$ 39.39	17.22
GROUP 5	$ 40.49	17.22
GROUP 6	$ 39.61	17.22
GROUP 7	$ 40.71	17.22
GROUP 8	$ 39.72	17.22
GROUP 9	$ 40.82	17.22
GROUP 10	$ 39.84	17.22
GROUP 11	$ 40.94	17.22
GROUP 12	$ 40.01	17.22
GROUP 13	$ 40.11	17.22
GROUP 14	$ 40.14	17.22
GROUP 15	$ 40.22	17.22
GROUP 16	$ 40.34	17.22
GROUP 17	$ 40.51	17.22
GROUP 18	$ 40.61	17.22
GROUP 19	$ 40.72	17.22
GROUP 20	$ 40.84	17.22
GROUP 21	$ 41.01	17.22
GROUP 22	$ 41.11	17.22
GROUP 23	$ 41.22	17.22
GROUP 24	$ 41.34	17.22
GROUP 25	$ 41.51	17.22
OPERATOR: Power Equipment (Cranes, Piledriving & Hoisting)		
GROUP 1	$ 38.18	17.22
GROUP 2	$ 38.96	17.22
GROUP 3	$ 39.25	17.22
GROUP 4	$ 39.39	17.22
GROUP 5	$ 39.61	17.22
GROUP 6	$ 39.72	17.22
GROUP 7	$ 39.84	17.22
GROUP 8	$ 40.01	17.22
GROUP 9	$ 40.18	17.22
GROUP 10	$ 41.18	17.22
GROUP 11	$ 42.18	17.22
GROUP 12	$ 43.18	17.22
GROUP 13	$ 44.18	17.22
OPERATOR: Power Equipment (Tunnel Work)		
GROUP 1	$ 38.68	17.22
GROUP 2	$ 39.46	17.22
GROUP 3	$ 39.75	17.22
GROUP 4	$ 39.89	17.22
GROUP 5	$ 40.11	17.22
GROUP 6	$ 40.22	17.22
GROUP 7	$ 40.34	17.22

PREMIUM PAY:
$3.75 per hour shall be paid on all Power Equipment Operator

work on the followng Military Bases: China Lake Naval Reserve, Vandenberg AFB, Point Arguello, Seely Naval Base, Fort Irwin, Nebo Annex Marine Base, Marine Corp Logistics Base Yermo, Edwards AFB, 29 Palms Marine Base and Camp Pendleton

Workers required to suit up and work in a hazardous material environment: $2.00 per hour additional. Combination mixer and compressor operator on gunite work shall be classified as a concrete mobile mixer operator.

SEE ZONE DEFINITIONS AFTER CLASSIFICATIONS

POWER EQUIPMENT OPERATORS CLASSIFICATIONS

GROUP 1: Bargeman; Brakeman; Compressor operator; Ditch Witch, with seat or similar type equipment; Elevator operator-inside; Engineer Oiler; Forklift operator (includes loed, lull or similar types under 5 tons; Generator operator; Generator, pump or compressor plant operator; Pump operator; Signalman; Switchman

GROUP 2: Asphalt-rubber plant operator (nurse tank operator); Concrete mixer operator-skip type; Conveyor operator; Fireman; Forklift operator (includes loed, lull or similar types over 5 tons; Hydrostatic pump operator; oiler crusher (asphalt or concrete plant); Petromat laydown machine; PJU side dum jack; Screening and conveyor machine operator (or similar types); Skiploader (wheel type up to 3/4 yd. without attachment); Tar pot fireman; Temporary heating plant operator; Trenching machine oiler

GROUP 3: Asphalt-rubber blend operator; Bobcat or similar type (Skid steer); Equipment greaser (rack); Ford Ferguson (with dragtype attachments); Helicopter radioman (ground); Stationary pipe wrapping and cleaning machine operator

GROUP 4: Asphalt plant fireman; Backhoe operator (mini-max or similar type); Boring machine operator; Boxman or mixerman (asphalt or concrete); Chip spreading machine operator; Concrete cleaning decontamination machine operator; Concrete Pump Operator (small portable); Drilling machine operator, small auger types (Texoma super economatic or similar types - Hughes 100 or 200 or similar types - drilling depth of 30' maximum); Equipment greaser (grease truck); Guard rail post driver operator; Highline cableway signalman; Horizontal Directional Drilling Machine; Hydra-hammer-aero stomper; Micro Tunneling (above ground tunnel); Power concrete curing machine operator; Power concrete saw operator; Power-driven jumbo form setter operator; Power sweeper operator; Rock Wheel Saw/Trencher; Roller operator (compacting); Screed operator (asphalt or concrete); Trenching machine operator (up to 6 ft.); Vacuum or much truck

GROUP 5: Equipment Greaser (Grease Truck/Multi Shift).

GROUP 6: Articulating material hauler; Asphalt plant engineer; Batch plant operator; Bit sharpener; Concrete joint machine operator (canal and similar type); Concrete

planer operator; Dandy digger; Deck engine operator; Derrickman (oilfield type); Drilling machine operator, bucket or auger types (Calweld 100 bucket or similar types - Watson 1000 auger or similar types - Texoma 330, 500 or 600 auger or similar types - drilling depth of 45' maximum); Drilling machine operator; Hydrographic seeder machine operator (straw, pulp or seed), Jackson track maintainer, or similar type; Kalamazoo Switch tamper, or similar type; Machine tool operator; Maginnis internal full slab vibrator, Mechanical berm, curb or gutter(concrete or asphalt); Mechanical finisher operator (concrete, Clary-Johnson-Bidwell or similar); Micro tunnel system (below ground); Pavement breaker operator (truck mounted); Road oil mixing machine operator; Roller operator (asphalt or finish), rubber-tired earth moving equipment (single engine, up to and including 25 yds. struck); Self-propelled tar pipelining machine operator; Skiploader operator (crawler and wheel type, over 3/4 yd. and up to and including 1-1/2 yds.); Slip form pump operator (power driven hydraulic lifting device for concrete forms); Tractor operator-bulldozer, tamper-scraper (single engine, up to 100 h.p. flywheel and similar types, up to and including D-5 and similar types); Tugger hoist operator (1 drum); Ultra high pressure waterjet cutting tool system operator; Vacuum blasting machine operator

GROUP 7: Welder - General

GROUP 8: Asphalt or concrete spreading operator (tamping or finishing); Asphalt paving machine operator (Barber Greene or similar type); Asphalt-rubber distribution operator; Backhoe operator (up to and including 3/4 yd.), small ford, Case or similar; Cast-in-place pipe laying machine operator; Combination mixer and compressor operator (gunite work); Compactor operator (self-propelled); Concrete mixer operator (paving); Crushing plant operator; Drill Doctor; Drilling machine operator, Bucket or auger types (Calweld 150 bucket or similar types - Watson 1500, 2000 2500 auger or similar types - Texoma 700, 800 auger or similar types - drilling depth of 60' maximum); Elevating grader operator; Grade checker; Gradall operator; Grouting machine operator; Heavy-duty repairman; Heavy equipment robotics operator; Kalamazoo balliste regulator or similar type; Kolman belt loader and similar type; Le Tourneau blob compactor or similar type; Loader operator (Athey, Euclid, Sierra and similar types); Mobark Chipper or similar; Ozzie padder or similar types; P.C. slot saw; Pneumatic concrete placing machine operator (Hackley-Presswell or similar type); Pumpcrete gun operator; Rock Drill or similar types; Rotary drill operator (excluding caisson type); Rubber-tired earth-moving equipment operator (single engine, caterpillar, Euclid, Athey Wagon and similar types with any and all attachments over 25 yds. up to and including 50 cu. yds. struck); Rubber-tired earth-moving equipment operator (multiple engine up to and including 25 yds. struck); Rubber-tired scraper operator (self-loading paddle wheel type-John Deere, 1040 and similar single unit); Self-propelled curb and gutter machine operator; Shuttle buggy; Skiploader operator (crawler and wheel type over 1-1/2 yds. up to and including 6-1/2 yds.); Soil remediation plant

operator; Surface heaters and planer operator; Tractor compressor drill combination operator; Tractor operator (any type larger than D-5 - 100 flywheel h.p. and over, or similar-bulldozer, tamper, scraper and push tractor single engine); Tractor operator (boom attachments), Traveling pipe wrapping, cleaning and bendng machine operator; Trenching machine operator (over 6 ft. depth capacity, manufacturer's rating); trenching Machine with Road Miner attachment (over 6 ft depth capacity): Ultra high pressure waterjet cutting tool system mechanic; Water pull (compaction) operator

GROUP 9: Heavy Duty Repairman

GROUP 10: Drilling machine operator, Bucket or auger types (Calweld 200 B bucket or similar types-Watson 3000 or 5000 auger or similar types-Texoma 900 auger or similar types-drilling depth of 105' maximum); Dual drum mixer, dynamic compactor LDC350 (or similar types); Monorail locomotive operator (diesel, gas or electric); Motor patrol-blade operator (single engine); Multiple engine tractor operator (Euclid and similar type-except Quad 9 cat.); Rubber-tired earth-moving equipment operator (single engine, over 50 yds. struck); Pneumatic pipe ramming tool and similar types; Prestressed wrapping machine operator; Rubber-tired earth-moving equipment operator (single engine, over 50 yds. struck); Rubber tired earth moving equipment operator (multiple engine, Euclid, caterpillar and similar over 25 yds. and up to 50 yds. struck), Tower crane repairman; Tractor loader operator (crawler and wheel type over 6-1/2 yds.); Woods mixer operator (and similar Pugmill equipment)

GROUP 11: Heavy Duty Repairman - Welder Combination, Welder - Certified.

GROUP 12: Auto grader operator; Automatic slip form operator; Drilling machine operator, bucket or auger types (Calweld, auger 200 CA or similar types - Watson, auger 6000 or similar types - Hughes Super Duty, auger 200 or similar types - drilling depth of 175' maximum); Hoe ram or similar with compressor; Mass excavator operator less tha 750 cu. yards; Mechanical finishing machine operator; Mobile form traveler operator; Motor patrol operator (multi-engine); Pipe mobile machine operator; Rubber-tired earth- moving equipment operator (multiple engine, Euclid, Caterpillar and similar type, over 50 cu. yds. struck); Rubber-tired self- loading scraper operator (paddle-wheel-auger type self-loading - two (2) or more units)

GROUP 13: Rubber-tired earth-moving equipment operator operating equipment with push-pull system (single engine, up to and including 25 yds. struck)

GROUP 14: Canal liner operator; Canal trimmer operator; Remote- control earth-moving equipment operator (operating a second piece of equipment: $1.00 per hour additional); Wheel excavator operator (over 750 cu. yds.)

GROUP 15: Rubber-tired earth-moving equipment operator,

operating equipment with push-pull system (single engine, Caterpillar, Euclid, Athey Wagon and similar types with any and all attachments over 25 yds. and up to and including 50 yds. struck); Rubber-tired earth-moving equipment operator, operating equipment with push-pull system (multiple engine-up to and including 25 yds. struck)

GROUP 16: Rubber-tired earth-moving equipment operator, operating equipment with push-pull system (single engine, over 50 yds. struck); Rubber-tired earth-moving equipment operator, operating equipment with push-pull system (multiple engine, Euclid, Caterpillar and similar, over 25 yds. and up to 50 yds. struck)

GROUP 17: Rubber-tired earth-moving equipment operator, operating equipment with push-pull system (multiple engine, Euclid, Caterpillar and similar, over 50 cu. yds. struck); Tandem tractor operator (operating crawler type tractors in tandem - Quad 9 and similar type)

GROUP 18: Rubber-tired earth-moving equipment operator, operating in tandem (scrapers, belly dumps and similar types in any combination, excluding compaction units - single engine, up to and including 25 yds. struck)

GROUP 19: Rotex concrete belt operator (or similar types); Rubber-tired earth-moving equipment operator, operating in tandem (scrapers, belly dumps and similar types in any combination, excluding compaction units - single engine, Caterpillar, Euclid, Athey Wagon and similar types with any and all attachments over 25 yds.and up to and including 50 cu. yds. struck); Rubber-tired earth-moving equipment operator, operating in tandem (scrapers, belly dumps and similar types in any combination, excluding compaction units - multiple engine, up to and including 25 yds. struck)

GROUP 20: Rubber-tired earth-moving equipment operator, operating in tandem (scrapers, belly dumps and similar types in any combination, excluding compaction units - single engine, over 50 yds. struck); Rubber-tired earth-moving equipment operator, operating in tandem (scrapers, belly dumps, and similar types in any combination, excluding compaction units - multiple engine, Euclid, Caterpillar and similar, over 25 yds. and up to 50 yds. struck)

GROUP 21: Rubber-tired earth-moving equipment operator, operating in tandem (scrapers, belly dumps and similar types in any combination, excluding compaction units - multiple engine, Euclid, Caterpillar and similar type, over 50 cu. yds. struck)

GROUP 22: Rubber-tired earth-moving equipment operator, operating equipment with the tandem push-pull system (single engine, up to and including 25 yds. struck)

GROUP 23: Rubber-tired earth-moving equipment operator, operating equipment with the tandem push-pull system (single engine, Caterpillar, Euclid, Athey Wagon and similar types with any and all attachments over 25 yds. and

up to and including 50 yds. struck); Rubber-tired earth-moving equipment operator, operating with the tandem push-pull system (multiple engine, up to and including 25 yds. struck)

GROUP 24: Rubber-tired earth-moving equipment operator, operating equipment with the tandem push-pull system (single engine, over 50 yds. struck); Rubber-tired earth-moving equipment operator, operating equipment with the tandem push-pull system (multiple engine, Euclid, Caterpillar and similar, over 25 yds. and up to 50 yds. struck)

GROUP 25: Concrete pump operator-truck mounted; Rubber-tired earth-moving equipment operator, operating equipment with the tandem push-pull system (multiple engine, Euclid, Caterpillar and similar type, over 50 cu. yds. struck)

CRANES, PILEDRIVING AND HOISTING EQUIPMENT CLASSIFICATIONS

GROUP 1: Engineer oiler; Fork lift operator (includes loed, lull or similar types)

GROUP 2: Truck crane oiler

GROUP 3: A-frame or winch truck operator; Ross carrier operator (jobsite)

GROUP 4: Bridge-type unloader and turntable operator; Helicopter hoist operator

GROUP 5: Hydraulic boom truck; Stinger crane (Austin-Western or similar type); Tugger hoist operator (1 drum)

GROUP 6: Bridge crane operator; Cretor crane operator; Hoist operator (Chicago boom and similar type); Lift mobile operator; Lift slab machine operator (Vagtborg and similar types); Material hoist and/or manlift operator; Polar gantry crane operator; Self Climbing scaffold (or similar type); Shovel, backhoe, dragline, clamshell operator (over 3/4 yd. and up to 5 cu. yds. mrc); Tugger hoist operator

GROUP 7: Pedestal crane operator; Shovel, backhoe, dragline, clamshell operator (over 5 cu. yds. mrc); Tower crane repair; Tugger hoist operator (3 drum)

GROUP 8: Crane operator (up to and including 25 ton capacity); Crawler transporter operator; Derrick barge operator (up to and including 25 ton capacity); Hoist operator, stiff legs, Guy derrick or similar type (up to and including 25 ton capacity); Shovel, backhoe, dragline, clamshell operator (over 7 cu. yds., M.R.C.)

GROUP 9: Crane operator (over 25 tons and up to and including 50 tons mrc); Derrick barge operator (over 25 tons up to and including 50 tons mrc); Highline cableway operator; Hoist operator, stiff legs, Guy derrick or similar type (over 25 tons up to and including 50 tons mrc); K-crane operator; Polar crane operator; Self erecting tower crane operator maximum lifting capacity ten tons

GROUP 10: Crane operator (over 50 tons and up to and including 100 tons mrc); Derrick barge operator (over 50 tons up to and including 100 tons mrc); Hoist operator, stiff legs, Guy derrick or similar type (over 50 tons up to and including 100 tons mrc), Mobile tower crane operator (over 50 tons, up to and including 100 tons M.R.C.); Tower crane operator and tower gantry

GROUP 11: Crane operator (over 100 tons and up to and including 200 tons mrc); Derrick barge operator (over 100 tons up to and including 200 tons mrc); Hoist operator, stiff legs, Guy derrick or similar type (over 100 tons up to and including 200 tons mrc); Mobile tower crane operator (over 100 tons up to and including 200 tons mrc)

GROUP 12: Crane operator (over 200 tons up to and including 300 tons mrc); Derrick barge operator (over 200 tons up to and including 300 tons mrc); Hoist operator, stiff legs, Guy derrick or similar type (over 200 tons, up to and including 300 tons mrc); Mobile tower crane operator (over 200 tons, up to and including 300 tons mrc)

GROUP 13: Crane operator (over 300 tons); Derrick barge operator (over 300 tons); Helicopter pilot; Hoist operator, stiff legs, Guy derrick or similar type (over 300 tons); Mobile tower crane operator (over 300 tons)

TUNNEL CLASSIFICATIONS

GROUP 1: Skiploader (wheel type up to 3/4 yd. without attachment)

GROUP 2: Power-driven jumbo form setter operator

GROUP 3: Dinkey locomotive or motorperson (up to and including 10 tons)

GROUP 4: Bit sharpener; Equipment greaser (grease truck); Slip form pump operator (power-driven hydraulic lifting device for concrete forms); Tugger hoist operator (1 drum); Tunnel locomotive operator (over 10 and up to and including 30 tons)

GROUP 5: Backhoe operator (up to and including 3/4 yd.); Small Ford, Case or similar; Drill doctor; Grouting machine operator; Heading shield operator; Heavy-duty repairperson; Loader operator (Athey, Euclid, Sierra and similar types); Mucking machine operator (1/4 yd., rubber-tired, rail or track type); Pneumatic concrete placing machine operator (Hackley-Presswell or similar type); Pneumatic heading shield (tunnel); Pumpcrete gun operator; Tractor compressor drill combination operator; Tugger hoist operator (2 drum); Tunnel locomotive operator (over 30 tons)

GROUP 6: Heavy Duty Repairman

GROUP 7: Tunnel mole boring machine operator

ENGINEERS ZONES

$1.00 additional per hour for all of IMPERIAL County and the portions of KERN, RIVERSIDE & SAN BERNARDINO Counties as defined below:

That area within the following Boundary: Begin in San Bernardino County, approximately 3 miles NE of the intersection of I-15 and the California State line at that point which is the NW corner of Section 1, T17N,m R14E, San Bernardino Meridian. Continue W in a straight line to that point which is the SW corner of the NW ¼ of Section 6, T27S, R42E, Mt. Diablo Meridian. Continue North to the intersection with the Inyo County Boundary at that point which is the NE corner of the W ½ of the N ¼ of Section 6, T25S, R42E, MDM. Continue W along the Inyo and San Bernardino County boundary until the intersection with Kern County, as that point which is the SE corner of Section 34, T24S, R40E, MDM. Continue W along the Inyo and Kern County boundary until the intersection with Tulare County, at that point which is the SW corner of the SE ¼ of Section 32, T24S, R37E, MDM. Continue W along the Kern and Tulare County boundary, until that point which is the NW corner of T25S, R32E, MDM. Continue S following R32E lines to the NW corner of T31S, R32E, MDM. Continue W to the NW corner of T31S, R31E, MDM. Continue S to the SW corner of T32S, R31E, MDM. Continue W to SW corner of SE ¼ of Section 34, T32S, R30E, MDM. Continue S to SW corner of T11N, R17W, SBM. Continue E along south boundary of T11N, SBM to SW corner of T11N, R7W, SBM. Continue S to SW corner of T9N, R7W, SBM. Continue E along south boundary of T9N, SBM to SW corner of T9N, R1E, SBM. Continue S along west boundary of R1E, SMB to Riverside County line at the SW corner of T1S, R1E, SBM. Continue E along south boundary of T1s, SBM (Riverside County Line) to SW corner of T1S, R10E, SBM. Continue S along west boundary of R10E, SBM to Imperial County line at the SW corner of T8S, R10E, SBM. Continue W along Imperial and Riverside county line to NW corner of T9S, R9E, SBM. Continue S along the boundary between Imperial and San Diego Counties, along the west edge of R9E, SBM to the south boundary of Imperial County/California state line. Follow the California state line west to Arizona state line, then north to Nevada state line, then continuing NW back to start at the point which is the NW corner of Section 1, T17N, R14E, SBM

$1.00 additional per hour for portions of SAN LUIS OBISPO, KERN, SANTA BARBARA & VENTURA as defined below:

That area within the following Boundary: Begin approximately 5 miles north of the community of Cholame, on the Monterey County and San Luis Obispo County boundary at the NW corner of T25S, R16E, Mt. Diablo Meridian. Continue south along the west side of R16E to the SW corner of T30S, R16E, MDM. Continue E to SW corner of T30S, R17E, MDM. Continue S to SW corner of T31S, R17E, MDM. Continue E to SW corner of T31S, R18E, MDM. Continue S along West side of R18E, MDM as it crosses into San Bernardino Meridian numbering area and becomes R30W. Follow the west side of R30W, SBM to the SW corner of T9N, R30W, SBM. Continue E along the south edge of T9N, SBM to the Santa Barbara County and Ventura County boundary at that point whch is the SW corner of Section 34.T9N, R24W, SBM, continue S along the Ventura County line to that point which is the SW corner of

the SE ¼ of Section 32, T7N, R24W, SBM. Continue E along the south edge of T7N, SBM to the SE corner to T7N, R21W, SBM. Continue N along East side of R21W, SBM to Ventura County and Kern County boundary at the NE corner of T8N, R21W. Continue W along the Ventura County and Kern County boundary to the SE corner of T9N, R21W. Continue North along the East edge of R21W, SBM to the NE corner of T12N, R21W, SBM. Continue West along the north edge of T12N, SBM to the SE corner of T32S, R21E, MDM. [T12N SBM is a think strip between T11N SBM and T32S MDM]. Continue North along the East side of R21E, MDM to the Kings County and Kern County border at the NE corner of T25S, R21E, MDM, continue West along the Kings County and Kern County Boundary until the intersection of San Luis Obispo County. Continue west along the Kings County and San Luis Obispo County boundary until the intersection with Monterey County. Continue West along the Monterey County and San Luis Obispo County boundary to the beginning point at the NW corner of T25S, R16E, MDM.

$2.00 additional per hour for INYO and MONO Counties and the Northern portion of SAN BERNARDINO County as defined below:

That area within the following Boundary: Begin at the intersection of the northern boundary of Mono County and the California state line at the point which is the center of Section 17, T10N, R22E, Mt. Diablo Meridian. Continue S then SE along the entire western boundary of Mono County, until it reaches Inyo County at the point which is the NE corner of the W ½ of the NW ¼ of Section 2, T8S, R29E, MDM. Continue SSE along the entire western boundary of Inyo County, until the intersection with Kern County at the point which is the SW corner of the SE ¼ of Section 32, T24S, R37E, MDM. Continue E along the Inyo and Kern County boundary until the intersection with San Bernardino County at that point which is the SE corner of section 34, T24S, R40E, MDM. Continue E along the Inyo and San Bernardino County boundary until the point which is the NE corner of the W ½ of the NW ¼ of Section 6, T25S, R42E, MDM. Continue S to that point which is the SW corner of the NW ¼ of Section 6, T27S, R42E, MDM. Continue E in a straight line to the California and Nevada state border at the point which is the NW corner of Section 1, T17N, R14E, San Bernardino Meridian. Then continue NW along the state line to the starting point, which is the center of Section 18, T10N, R22E, MDM.

REMAINING AREA NOT DEFINED ABOVE RECIEVES BASE RATE

ENGI0012-004 08/01/2009

	Rates	Fringes
OPERATOR: Power Equipment (DREDGING)		
(1) Leverman	$ 44.83	17.22
(2) Dredge dozer	$ 40.36	17.22
(3) Deckmate	$ 40.25	17.22
(4) Winch operator (stern winch on dredge)	$ 39.70	17.22

(5) Fireman-Oiler,
Deckhand, Bargeman,
Leveehand.....$ 39.16 17.22
(6) Barge Mate.....$ 39.77 17.22

IRON0002-004 07/01/2009

	Rates	Fringes
Ironworkers:		
Fence Erector	$ 26.58	15.24
Ornamental, Reinforcing and Structural	$ 33.00	23.71

PREMIUM PAY:

$6.00 additional per hour at the following locations:

China Lake Naval Test Station, Chocolate Mountains Naval Reserve-Niland,
Edwards AFB, Fort Irwin Military Station, Fort Irwin Training Center-Goldstone, San Clemente Island, San Nicholas Island, Susanville Federal Prison, 29 Palms - Marine Corps, U.S. Marine Base - Barstow, U.S. Naval Air Facility - Sealey, Vandenberg AFB

$4.00 additional per hour at the following locations:

Army Defense Language Institute - Monterey, Fallon Air Base, Naval Post Graduate School - Monterey, Yermo Marine Corps Logistics Center

$2.00 additional per hour at the following locations:

Port Hueneme, Port Mugu, U.S. Coast Guard Station - Two Rock

LABO0300-001 07/01/2008

	Rates	Fringes
Brick Tender	$ 27.17	13.75

LABO0300-003 01/01/2010

	Rates	Fringes
LABORER (GUNITE)		
GROUP 1	$ 30.04	17.37
GROUP 2	$ 29.09	17.37
GROUP 3	$ 25.55	17.37
LABORER (TUNNEL)		
GROUP 1	$ 31.24	15.04
GROUP 2	$ 31.56	15.04
GROUP 3	$ 32.02	15.04
GROUP 4	$ 32.71	15.04
LABORER		
GROUP 1	$ 26.33	14.75
GROUP 2	$ 26.88	14.75
GROUP 3	$ 27.43	14.75
GROUP 4	$ 28.98	14.75

GROUP 5.....$ 29.33 14.75

FOOTNOTE: GUNITE PREMIUM PAY: Workers working from a Bosn'n's Chair or suspended from a rope or cable shall receive 40 cents per hour above the foregoing applicable classification rates. Workers doing gunite and/or shotcrete work in a tunnel shall receive 35 cents per hour above the foregoing applicable classification rates, paid on a portal-to-portal basis. Any work performed on, in or above any smoke stack, silo, storage elevator or similar type of structure, when such structure is in excess of 75'-0" above base level and which work must be performed in whole or in part more than 75'-0" above base level, that work performed above the 75'-0" level shall be compensated for at 35 cents per hour above the applicable classification wage rate.

LABORER CLASSIFICATIONS

GROUP 1: Cleaning and handling of panel forms; Concrete screeding for rough strike-off; Concrete, water curing; Demolition laborer, the cleaning of brick if performed by a worker performing any other phase of demolition work, and the cleaning of lumber; Fire watcher, limber, brush loader, piler and debris handler; Flag person; Gas, oil and/or water pipeline laborer; Laborer, asphalt-rubber material loader; Laborer, general or construction; Laborer, general clean-up; Laborer, landscaping; Laborer, jetting; Laborer, temporary water and air lines; Material hose operator (walls, slabs, floors and decks); Plugging, filling of shee bolt holes; Dry packing of concrete; Railroad maintenance, repair track person and road beds; Streetcar and railroad construction track laborers; Rigging and signaling; Scaler; Slip form raiser; Tar and mortar; Tool crib or tool house laborer; Traffic control by any method; Window cleaner; Wire mesh pulling - all concrete pouring operations

GROUP 2: Asphalt shoveler; Cement dumper (on 1 yd. or larger mixer and handling bulk cement); Cesspool digger and installer; Chucktender; Chute handler, pouring concrete, the handling of the chute from readymix trucks, such as walls, slabs, decks, floors, foundation, footings, curbs, gutters and sidewalks; Concrete curer, impervious membrane and form oiler; Cutting torch operator (demolition); Fine grader, highways and street paving, airport, runways and similar type heavy construction; Gas, oil and/or water pipeline wrapper - pot tender and form person; Guinea chaser; Headerboard person - asphalt; Laborer, packing rod steel and pans; Membrane vapor barrier installer; Power broom sweeper (small); Riprap stonepaver, placing stone or wet sacked concrete; Roto scraper and tiller; Sandblaster (pot tender); Septic tank digger and installer(lead); Tank scaler and cleaner; Tree climber, faller, chain saw operator, Pittsburgh chipper and similar type brush shredder; Underground laborer, including caisson bellower

GROUP 3: Buggymobile person; Concrete cutting torch; Concrete pile cutter; Driller, jackhammer, 2-1/2 ft. drill steel or longer; Dri-pak-it machine; Gas, oil and/or water pipeline wrapper, 6-in. pipe and over, by any method, inside and

out; High scaler (including drilling of same); Hydro seeder and similar type; Impact wrench multi-plate; Kettle person, pot person and workers applying asphalt, lay-kold, creosote, lime caustic and similar type materials ("applying" means applying, dipping, brushing or handling of such materials for pipe wrapping and waterproofing); Operator of pneumatic, gas, electric tools, vibrating machine, pavement breaker, air blasting, come-alongs, and similar mechanical tools not separately classified herein; Pipelayer's backup person, coating, grouting, making of joints, sealing, caulking, diapering and including rubber gasket joints, pointing and any and all other services; Rock slinger; Rotary scarifier or multiple head concrete chipping scarifier; Steel headerboard and guideline setter; Tamper, Barko, Wacker and similar type; Trenching machine, hand-propelled

GROUP 4: Asphalt raker, lute person, ironer, asphalt dump person, and asphalt spreader boxes (all types); Concrete core cutter (walls, floors or ceilings), grinder or sander; Concrete saw person, cutting walls or flat work, scoring old or new concrete; Cribber, shorer, lagging, sheeting and trench bracing, hand-guided lagging hammer; Head rock slinger; Laborer, asphalt- rubber distributor boot person; Laser beam in connection with laborers' work; Oversize concrete vibrator operator, 70 lbs. and over; Pipelayer performing all services in the laying and installation of pipe from the point of receiving pipe in the ditch until completion of operation, including any and all forms of tubular material, whether pipe, metallic or non-metallic, conduit and any other stationary type of tubular device used for the conveying of any substance or element, whether water, sewage, solid gas, air, or other product whatsoever and without regard to the nature of material from which the tubular material is fabricated; No-joint pipe and stripping of same; Prefabricated manhole installer; Sandblaster (nozzle person), water blasting, Porta Shot-Blast

GROUP 5: Blaster powder, all work of loading holes, placing and blasting of all powder and explosives of whatever type, regardless of method used for such loading and placing; Driller: All power drills, excluding jackhammer, whether core, diamond, wagon, track, multiple unit, and any and all other types of mechanical drills without regard to the form of motive power; Toxic waste removal

TUNNEL LABORER CLASSIFICATIONS

GROUP 1: Batch plant laborer; Bull gang mucker, track person; Changehouse person; Concrete crew, including rodder and spreader; Dump person; Dump person (outside); Swamper (brake person and switch person on tunnel work); Tunnel materials handling person

GROUP 2: Chucktender, cabletender; Loading and unloading agitator cars; Nipper; Pot tender, using mastic or other materials (for example, but not by way of limitation, shotcrete, etc.); Vibrator person, jack hammer, pneumatic tools (except driller)

GROUP 3: Blaster, driller, powder person; Chemical grout jet person; Cherry picker person; Grout gun person; Grout mixer person; Grout pump person; Jackleg miner; Jumbo person; Kemper and other pneumatic concrete placer operator; Miner, tunnel (hand or machine); Nozzle person; Operating of troweling and/or grouting machines; Powder person (primer house); Primer person; Sandblaster; Shotcrete person; Steel form raiser and setter; Timber person, retimber person, wood or steel; Tunnel Concrete finisher

GROUP 4: Diamond driller; Sandblaster; Shaft and raise work

GUNITE LABORER CLASSIFICATIONS

GROUP 1: Rodmen, Nozzlemen

GROUP 2: Gunmen

GROUP 3: Reboundmen

LABO0300-005 08/05/2009

	Rates	Fringes
LABORER		
PLASTER CLEAN-UP LABORER....	$ 26.65	14.70
PLASTER TENDER.....	$ 29.20	14.70

LABO0882-002 01/01/2010

	Rates	Fringes
Asbestos Removal Laborer.....	$ 26.15	14.25

SCOPE OF WORK: Includes site mobilization, initial site cleanup, site preparation, removal of asbestos-containing material and toxic waste, encapsulation, enclosure and disposal of asbestos- containing materials and toxic waste by hand or with equipment or machinery; scaffolding, fabrication of temporary wooden barriers and assembly of decontamination stations.

LABO1184-001 07/01/2009

	Rates	Fringes
Laborers: (HORIZONTAL DIRECTIONAL DRILLING)		
(1) Drilling Crew Laborer...	$ 27.05	10.40
(2) Vehicle Operator/Hauler.	$ 27.22	10.40
(3) Horizontal Directional Drill Operator.....	$ 29.07	10.40
(4) Electronic Tracking Locator.....	$ 31.07	10.40
Laborers: (STRIPING/SLURRY SEAL)		
GROUP 1.....	$ 28.50	13.56
GROUP 2.....	$ 29.80	13.56
GROUP 3.....	$ 31.81	13.56

GROUP 4.....$ 33.55 13.56

LABORERS - STRIPING CLASSIFICATIONS

GROUP 1: Protective coating, pavement sealing, including repair and filling of cracks by any method on any surface in parking lots, game courts and playgrounds; carstops; operation of all related machinery and equipment; equipment repair technician

GROUP 2: Traffic surface abrasive blaster; pot tender - removal of all traffic lines and markings by any method (sandblasting, waterblasting, grinding, etc.) and preparation of surface for coatings. Traffic control person: controlling and directing traffic through both conventional and moving lane closures; operation of all related machinery and equipment

GROUP 3: Traffic delineating device applicator: Layout and application of pavement markers, delineating signs, rumble and traffic bars, adhesives, guide markers, other traffic delineating devices including traffic control. This category includes all traffic related surface preparation (sandblasting, waterblasting, grinding) as part of the application process. Traffic protective delineating system installer: removes, relocates, installs, permanently affixed roadside and parking delineation barricades, fencing, cable anchor, guard rail, reference signs, monument markers; operation of all related machinery and equipment; power broom sweeper

GROUP 4: Striper: layout and application of traffic stripes and markings; hot thermo plastic; tape traffic stripes and markings, including traffic control; operation of all related machinery and equipment

---

PAIN0036-007 01/01/2010

	Rates	Fringes
Painters:		
(1) Repaint Including Lead Abatement	$ 23.10	9.41
(2) High Iron & Steel	$ 29.39	9.41
(3) Journeyman Painter including Lead Abatement	$ 27.39	9.41

REPAINT of any previously painted structure. Exceptions: work involving the aerospace industry, breweries, commercial recreational facilities, hotels which operate commercial establishments as part of hotel service, and sports facilities.

HIGH IRON & STEEL:
Aerial towers, towers, radio towers, smoke stacks, flag poles (any flag poles that can be finished from the ground with a ladder excluded), elevated water towers, steeples and domes in their entirety and any other extremely high and hazardous work, cooning steel, bos'n chair, or other similar devices, painting in other high hazardous work shall be classified as high iron & steel

---

PAIN0036-008 01/06/2010

	Rates	Fringes
DRYWALL FINISHER/TAPER.....	$ 33.22	12.19

PAIN0169-002 01/01/2010

	Rates	Fringes
GLAZIER.....	$ 31.18	14.15

PAIN1247-002 01/01/2010

	Rates	Fringes
SOFT FLOOR LAYER.....	$ 30.85	10.54

PLAS0200-001 08/05/2009

	Rates	Fringes
PLASTERER.....	$ 35.41	9.88

PLAS0500-002 07/01/2009

	Rates	Fringes
CEMENT MASON/CONCRETE FINISHER...	$ 29.50	18.40

PLUM0016-001 07/01/2009

	Rates	Fringes
PLUMBER/PIPEFITTER		
(1) Work on strip malls, light commercial, tenant improvement and remodel work.....	$ 28.84	14.47
(2) Work on new additions and remodeling of bars, restaurant, stores and commercial buildings not to exceed 5,000 sq. ft. of floor space.....	$ 35.97	15.86
(3) All other work.....	$ 37.10	16.84

PLUM0345-001 07/01/2009

	Rates	Fringes
PLUMBER		
Landscape/Irrigation Fitter.	$ 26.70	13.84
Sewer & Storm Drain Work....	$ 25.18	15.67

ROOF0036-002 08/01/2009

	Rates	Fringes

ROOFER.....$ 33.15 8.47

FOOTNOTE: Pitch premium: Work on which employees are exposed to pitch fumes or required to handle pitch, pitch base or pitch impregnated products, or any material containing coal tar pitch, the entire roofing crew shall receive $1.75 per hour "pitch premium" pay.

SFCA0669-007 01/01/2009

	Rates	Fringes
SPRINKLER FITTER	$ 32.15	16.05

SHEE0273-002 02/01/2010

	Rates	Fringes
SHEET METAL WORKER	$ 38.04	15.93

HOLIDAYS: New Year's Day, Martin Luther King Day, President's Day, Good Friday, Memorial Day, Indepdendence Day, Labor Day, Veterans Day,Thankisgiving Day & Friday after, Christmas Day

---

* TEAM0011-002 07/01/2008

	Rates	Fringes
TRUCK DRIVER		
GROUP 1	$ 26.44	18.24
GROUP 2	$ 26.59	18.24
GROUP 3	$ 26.72	18.24
GROUP 4	$ 26.91	18.24
GROUP 5	$ 26.94	18.24
GROUP 6	$ 26.97	18.24
GROUP 7	$ 27.22	18.24
GROUP 8	$ 27.47	18.24
GROUP 9	$ 27.67	18.24
GROUP 10	$ 27.97	18.24
GROUP 11	$ 28.47	18.24
GROUP 12	$ 28.90	18.24

WORK ON ALL MILITARY BASES:
PREMIUM PAY: $3.00 per hour additional.
[29 palms Marine Base, Camp Roberts, China Lake, Edwards AFB, El Centro Naval Facility, Fort Irwin, Marine Corps Logistics Base at Nebo & Yermo, Mountain Warfare Training Center, Bridgeport, Point Arguello, Point Conception, Vandenberg AFB]

TRUCK DRIVERS CLASSIFICATIONS

GROUP 1: Truck driver

GROUP 2: Driver of vehicle or combination of vehicles - 2 axles; Traffic control pilot car excluding moving heavy equipment permit load; Truck mounted broom

GROUP 3: Driver of vehicle or combination of vehicles - 3 axles; Boot person; Cement mason distribution truck; Fuel truck driver; Water truck - 2 axle; Dump truck, less than 16 yds. water level; Erosion control driver

GROUP 4: Driver of transit mix truck, under 3 yds.; Dumpcrete truck, less than 6-1/2 yds. water level

GROUP 5: Water truck, 3 or more axles; Truck greaser and tire person ($0.50 additional for tire person); Pipeline and utility working truck driver, including winch truck and plastic fusion, limited to pipeline and utility work; Slurry truck driver

GROUP 6: Transit mix truck, 3 yds. or more; Dumpcrete truck, 6-1/2 yds. water level and over; Vehicle or combination of vehicles - 4 or more axles; Oil spreader truck; Dump truck, 16 yds. to 25 yds. water level

GROUP 7: A Frame, Swedish crane or similar; Forklift driver; Ross carrier driver

GROUP 8: Dump truck, 25 yds. to 49 yds. water level; Truck repair person; Water pull - single engine; Welder

GROUP 9: Truck repair person/welder; Low bed driver, 9 axles or over

GROUP 10: Dump truck - 50 yds. or more water level; Water pull - single engine with attachment

GROUP 11: Water pull - twin engine; Water pull - twin engine with attachments; Winch truck driver - $1.25 additional when operating winch or similar special attachments

GROUP 12: Boom Truck 17K and above

WELDERS - Receive rate prescribed for craft performing operation to which welding is incidental.

==========

Unlisted classifications needed for work not included within the scope of the classifications listed may be added after award only as provided in the labor standards contract clauses (29CFR 5.5 (a) (1) (ii)).

In the listing above, the "SU" designation means that rates listed under the identifier do not reflect collectively bargained wage and fringe benefit rates. Other designations indicate unions whose rates have been determined to be prevailing.

WAGE DETERMINATION APPEALS PROCESS

1.) Has there been an initial decision in the matter? This can

be:

* an existing published wage determination
* a survey underlying a wage determination
* a Wage and Hour Division letter setting forth a position on a wage determination matter
* a conformance (additional classification and rate) ruling

On survey related matters, initial contact, including requests for summaries of surveys, should be with the Wage and Hour Regional Office for the area in which the survey was conducted because those Regional Offices have responsibility for the Davis-Bacon survey program. If the response from this initial contact is not satisfactory, then the process described in 2.) and 3.) should be followed.

With regard to any other matter not yet ripe for the formal process described here, initial contact should be with the Branch of Construction Wage Determinations. Write to:

Branch of Construction Wage Determinations
Wage and Hour Division
U.S. Department of Labor
200 Constitution Avenue, N.W.
Washington, DC 20210

2.) If the answer to the question in 1.) is yes, then an interested party (those affected by the action) can request review and reconsideration from the Wage and Hour Administrator (See 29 CFR Part 1.8 and 29 CFR Part 7). Write to:

Wage and Hour Administrator
U.S. Department of Labor
200 Constitution Avenue, N.W.
Washington, DC 20210

The request should be accompanied by a full statement of the interested party's position and by any information (wage payment data, project description, area practice material, etc.) that the requestor considers relevant to the issue.

3.) If the decision of the Administrator is not favorable, an interested party may appeal directly to the Administrative Review Board (formerly the Wage Appeals Board). Write to:

Administrative Review Board
U.S. Department of Labor
200 Constitution Avenue, N.W.
Washington, DC 20210

4.) All decisions by the Administrative Review Board are final.

==========

END OF GENERAL DECISION

SECTION 7. FEDERAL REQUIREMENTS FOR FEDERAL-AID CONSTRUCTION PROJECTS

GENERAL.—The work herein proposed will be financed in whole or in part with Federal funds, and therefore all of the statutes, rules and regulations promulgated by the Federal Government and applicable to work financed in whole or in part with Federal funds will apply to such work. The "Required Contract Provisions, Federal-Aid Construction Contracts, "Form FHWA 1273, are included in this Section 7. Whenever in said required contract provisions references are made to "SHA contracting officer", "SHA resident engineer", or "authorized representative of the SHA", such references shall be construed to mean "Engineer" as defined in Section 5-1.01 of the Special Provisions. Whenever references are made to "State" such references shall be construed to mean "state" as defined in Section 5-1.01 of the Special Provisions. Whenever references are made to "State Highway Agency (SHA), such references shall be construed to mean "Department" as defined by Section 5-1.01 of the Special Provisions.

PERFORMANCE OF PREVIOUS CONTRACT.—In addition to the provisions in Section II, "Nondiscrimination," and Section VII, "Subletting or Assigning the Contract," of the required contract provisions, the Contractor shall comply with the following:

The bidder shall execute the CERTIFICATION WITH REGARD TO THE PERFORMANCE OF PREVIOUS CONTRACTS OR SUBCONTRACTS SUBJECT TO THE EQUAL OPPORTUNITY CLAUSE AND THE FILING OF REQUIRED REPORTS located in the proposal. No request for subletting or assigning any portion of the contract in excess of $10,000 will be considered under the provisions of Section VII of the required contract provisions unless such request is accompanied by the CERTIFICATION referred to above, executed by the proposed subcontractor.

NON-COLLUSION PROVISION.—The provisions in this section are applicable to all contracts except contracts for Federal Aid Secondary projects.

Title 23, United States Code, Section 112, requires as a condition precedent to approval by the Federal Highway Administrator of the contract for this work that each bidder file a sworn statement executed by, or on behalf of, the person, firm, association, or corporation to whom such contract is to be awarded, certifying that such person, firm, association, or corporation has not, either directly or indirectly, entered into any agreement, participated in any collusion, or otherwise taken any action in restraint of free competitive bidding in connection with the submitted bid. A form to make the non-collusion affidavit statement required by Section 112 as a certification under penalty of perjury rather than as a sworn statement as permitted by 28, USC, Sec. 1746, is included in the proposal.

PARTICIPATION BY DISADVANTAGED BUSINESS ENTERPRISES IN SUBCONTRACTING.—Part 26, Title 49, Code of Federal Regulations applies to this Federal-aid project. Pertinent sections of said Code are incorporated in part or in its entirety within other sections of these special provisions.

Schedule B—Information for Determining Joint Venture Eligibility

(This form need not be filled in if all joint venture firms are minority owned.)

1. Name of joint venture _____

_____

2. Address of joint venture _____

_____

3. Phone number of joint venture _____

_____

4. Identify the firms which comprise the joint venture. (The DBE partner must complete Schedule A.) _____

_____

a. Describe the role of the MBE firm in the joint venture.

_____

_____

b. Describe very briefly the experience and business qualifications of each non-DBE joint venturer: _____

_____

5. Nature of the joint venture's business _____

_____

6. Provide a copy of the joint venture agreement.

7. What is the claimed percentage of DBE ownership? ___

_____

8. Ownership of joint venture: (This need not be filled in if described in the joint venture agreement, provided by question 6.).

Revised 3-95
08-07-95

a. Profit and loss sharing.
b. Capital contributions, including equipment.
c. Other applicable ownership interests.

9. Control of and participation in this contract. Identify by name, race, sex, and "firm" those individuals (and their titles) who are responsible for day-to-day management and policy decision making, including, but not limited to, those with prime responsibility for:

a. Financial decisions _____

_____

b. Management decisions, such as:

1. Estimating _____

_____

2. Marketing and sales _____

_____

3. Hiring and firing of management personnel

_____

_____

4. Purchasing of major items or supplies _____

_____

c. Supervision of field operations _____

_____

Note.—If, after filing this Schedule B and before the completion of the joint venture's work on the contract covered by this regulation, there is any significant change in the information submitted, the joint venture must inform the grantee, either directly or through the prime contractor if the joint venture is a subcontractor.

Affidavit

"The undersigned swear that the foregoing statements are correct and include all material information necessary to identify and explain the terms and operation of our joint venture and the intended participation by each joint venturer in the undertaking. Further, the undersigned covenant and agree to provide to grantee current, complete and accurate information regarding actual joint venture work and the payment therefor and any proposed changes in any of the joint venture arrangements and to permit the audit and examination of the books, records and files of the joint venture, or those of each joint venturer relevant to the joint venture, by authorized representatives of the grantee or the Federal funding agency. Any material misrepresentation will be grounds for terminating any contract which may be awarded and for initiating action under Federal or State laws concerning false statements."

.....	.....
Name of Firm	Name of Firm
.....	.....
Signature	Signature
.....	.....
Name	Name
.....	.....
Title	Title
.....	.....
Date	Date

Date _____

State of _____

County of _____

On this ____ day of _____, 19 __, before me appeared (Name) _____, to me personally known, who, being duly sworn, did execute the foregoing affidavit, and did state that he or she was properly authorized by (Name of firm) _____ to execute the affidavit and did so as his or her free act and deed.

Notary Public _____

Commission expires _____

[Seal]

Date _____

State of _____

County of _____

On this ___ day of _____, 19 __, before me appeared (Name) _____ to me personally known, who, being duly sworn, did execute the foregoing affidavit, and did state that he or she was properly authorized by (Name of firm) _____ to execute the affidavit and did so as his or her free act and deed.

Notary Public _____

Commission expires _____

[Seal]

Revised 3-95
08-07-95

REQUIRED CONTRACT PROVISIONS
FEDERAL-AID CONSTRUCTION CONTRACTS

(Exclusive of Appalachian Contracts)

		Page
I.	General	3
II.	Nondiscrimination	3
III.	Nonsegregated Facilities	5
IV.	Payment of Predetermined Minimum Wage	6
V.	Statements and Payrolls	8
VI.	Record of Materials, Supplies, and Labor	9
VII.	Subletting or Assigning the Contract	9
VIII.	Safety: Accident Prevention	10
IX.	False Statements Concerning Highway Project	10
X.	Implementation of Clean Air Act and Federal Water Pollution Control Act	10
XI.	Certification Regarding Debarment, Suspension, Ineligibility, and Voluntary Exclusion	11
XII.	Certification Regarding Use of Contract Funds for Lobbying	12

ATTACHMENTS

A. Employment Preference for Appalachian Contracts (included in Appalachian contracts only)

I. GENERAL

1. These contract provisions shall apply to all work performed on the contract by the contractor's own organization and with the assistance of workers under the contractor's immediate superintendence and to all work performed on the contract by piecework, station work, or by subcontract.

2. Except as otherwise provided for in each section, the contractor shall insert in each subcontract all of the stipulations contained in these Required Contract Provisions, and further require their inclusion in any lower tier subcontract or purchase order that may in turn be made. The Required Contract Provisions shall not be incorporated by reference in any case. The prime contractor shall be responsible for compliance by any subcontractor or lower tier subcontractor with these Required Contract Provisions.

3. A breach of any of the stipulations contained in these Required Contract Provisions shall be sufficient grounds for termination of the contract.

4. A breach of the following clauses of the Required Contract Provisions may also be grounds for debarment as provided in 29 CFR 5.12:

Section I, paragraph 2;
Section IV, paragraphs 1, 2, 3, 4, and 7;
Section V, paragraphs 1 and 2a through 2g.

5. Disputes arising out of the labor standards provisions of Section IV (except paragraph 5) and Section V of these Required Contract Provisions shall not be subject to the general disputes clause of this contract. Such disputes shall be resolved in accordance with the procedures of the U.S. Department of Labor (DOL) as set forth in 29 CFR 5, 6, and 7. Disputes within the meaning of this clause include disputes between the contractor (or any of its subcontractors) and the contracting agency, the DOL, or the contractor's employees or their representatives.

6. **Selection of Labor:** During the performance of this contract, the contractor shall not:

a. discriminate against labor from any other State, possession, or territory of the United States (except for employment preference for Appalachian contracts, when applicable, as specified in Attachment A), or

b. employ convict labor for any purpose within the limits of the project unless it is labor performed by convicts who are on parole, supervised release, or probation.

II. NONDISCRIMINATION

(Applicable to all Federal-aid construction contracts and to all related subcontracts of $10,000 or more.)

1. **Equal Employment Opportunity:** Equal employment opportunity (EEO) requirements not to discriminate and to take affirmative action to assure equal opportunity as set forth under laws, executive orders, rules, regulations (28 CFR 35, 29 CFR 1630, and 41 CFR 60) and orders of the Secretary of Labor as modified by the provisions prescribed herein, and imposed pursuant to 23 U.S.C. 140 shall constitute the EEO and specific affirmative action standards for the contractor's project activities under this contract. The Equal Opportunity Construction Contract Specifications set forth under 41 CFR 60-4.3 and the provisions of the American Disabilities Act of 1990 (42 U.S.C. 12101 et seq.) set forth under 28 CFR 35 and 29 CFR 1630 are incorporated by reference in this contract. In the execution of this contract, the contractor agrees to comply with the following minimum specific requirement activities of EEO:

a. The contractor will work with the State highway agency (SHA) and the Federal Government in carrying out EEO obligations and in their review of his/her activities under the contract.

b. The contractor will accept as his operating policy the following statement:

"It is the policy of this Company to assure that applicants are employed, and that employees are treated during employment, without regard to their race, religion, sex, color, national origin, age or disability. Such action shall include: employment, upgrading, demotion, or transfer; recruitment or recruitment advertising; layoff or termination; rates of pay or other forms of compensation; and selection for training, including apprenticeship, preapprenticeship, and/or on-the-job training."

2. **EEO Officer:** The contractor will designate and make known to the SHA contracting officers an EEO Officer who will have the responsibility for and must be capable of effectively

administering and promoting an active contractor program of EEO and who must be assigned adequate authority and responsibility to do so.

3. **Dissemination of Policy:** All members of the contractor's staff who are authorized to hire, supervise, promote, and discharge employees, or who recommend such action, or who are substantially involved in such action, will be made fully cognizant of, and will implement, the contractor's EEO policy and contractual responsibilities to provide EEO in each grade and classification of employment. To ensure that the above agreement will be met, the following actions will be taken as a minimum:

a. Periodic meetings of supervisory and personnel office employees will be conducted before the start of work and then not less often than once every six months, at which time the contractor's EEO policy and its implementation will be reviewed and explained. The meetings will be conducted by the EEO Officer.

b. All new supervisory or personnel office employees will be given a thorough indoctrination by the EEO Officer, covering all major aspects of the contractor's EEO obligations within thirty days following their reporting for duty with the contractor.

c. All personnel who are engaged in direct recruitment for the project will be instructed by the EEO Officer in the contractor's procedures for locating and hiring minority group employees.

d. Notices and posters setting forth the contractor's EEO policy will be placed in areas readily accessible to employees, applicants for employment and potential employees.

e. The contractor's EEO policy and the procedures to implement such policy will be brought to the attention of employees by means of meetings, employee handbooks, or other appropriate means.

4. **Recruitment:** When advertising for employees, the contractor will include in all advertisements for employees the notation: "An Equal Opportunity Employer." All such advertisements will be placed in publications having a large circulation among minority groups in the area from which the project work force would normally be derived.

a. The contractor will, unless precluded by a valid bargaining agreement, conduct systematic and direct recruitment through public and private employee referral sources likely to yield qualified minority group applicants. To meet this requirement, the contractor will identify sources of potential minority group employees, and establish with such identified sources procedures whereby minority group applicants may be referred to the contractor for employment consideration.

b. In the event the contractor has a valid bargaining agreement providing for exclusive hiring hall referrals, he is expected to observe the provisions of that agreement to the extent that the system permits the contractor's compliance with EEO contract provisions. (The DOL has held that where implementation of such agreements have the effect of discriminating against minorities or women, or obligates the contractor to do the same, such implementation violates Executive Order 11246, as amended.)

c. The contractor will encourage his present employees to refer minority group applicants for employment. Information and procedures with regard to referring minority group applicants will be discussed with employees.

5. **Personnel Actions:** Wages, working conditions, and employee benefits shall be established and administered, and personnel actions of every type, including hiring, upgrading, promotion, transfer, demotion, layoff, and termination, shall be taken without regard to race, color, religion, sex, national origin, age or disability. The following procedures shall be followed:

a. The contractor will conduct periodic inspections of project sites to insure that working conditions and employee facilities do not indicate discriminatory treatment of project site personnel.

b. The contractor will periodically evaluate the spread of wages paid within each classification to determine any evidence of discriminatory wage practices.

c. The contractor will periodically review selected personnel actions in depth to determine whether there is evidence of discrimination. Where evidence is found, the contractor will promptly take corrective action. If the review indicates that the discrimination may extend beyond the actions reviewed, such corrective action shall include all affected persons.

d. The contractor will promptly investigate all complaints of alleged discrimination made to the contractor in connection with his obligations under this contract, will attempt to resolve such complaints, and will take appropriate corrective action within a reasonable time. If the investigation indicates that the discrimination may affect persons other than the complainant, such corrective action shall include such other persons. Upon completion of each investigation, the contractor will inform every complainant of all of his avenues of appeal.

6. Training and Promotion:

a. The contractor will assist in locating, qualifying, and increasing the skills of minority group and women employees, and applicants for employment.

b. Consistent with the contractor's work force requirements and as permissible under Federal and State regulations, the contractor shall make full use of training programs, i.e., apprenticeship, and on-the-job training programs for the geographical area of contract performance. Where feasible, 25 percent of apprentices or trainees in each occupation shall be in their first year of apprenticeship or training. In the event a special provision for training is provided under this contract, this subparagraph will be superseded as indicated in the special provision.

c. The contractor will advise employees and applicants for employment of available training programs and entrance requirements for each.

d. The contractor will periodically review the training and promotion potential of minority group and women employees and will encourage eligible employees to apply for such training and promotion.

7. **Unions:** If the contractor relies in whole or in part upon unions as a source of employees, the contractor will use his/her best efforts to obtain the cooperation of such unions to increase opportunities for minority groups and women within the unions, and to effect referrals by such unions of minority and female employees. Actions by the contractor either directly or through a contractor's association acting as agent will include the procedures set forth below:

a. The contractor will use best efforts to develop, in cooperation with the unions, joint training programs aimed toward qualifying more minority group members and women for membership in the unions and increasing the skills of minority group employees and women so that they may qualify for higher paying employment.

b. The contractor will use best efforts to incorporate an EEO clause into each union agreement to the end that such union will be contractually bound to refer applicants without regard to their race, color, religion, sex, national origin, age or disability.

c. The contractor is to obtain information as to the referral practices and policies of the labor union except that to the extent such information is within the exclusive possession of the labor union and such labor union refuses to furnish such information to the contractor, the contractor shall so certify to the SHA and shall set forth what efforts have been made to obtain such information.

d. In the event the union is unable to provide the contractor with a reasonable flow of minority and women referrals within the time limit set forth in the collective bargaining agreement, the contractor will, through independent recruitment efforts, fill the employment vacancies without regard to race, color, religion, sex, national origin, age or disability; making full efforts to obtain qualified and/or qualifiable minority group persons and women. (The DOL has held that it shall be no excuse that the union with which the contractor has a collective bargaining agreement providing for exclusive referral failed to refer minority employees.) In the event the union referral practice prevents the contractor from meeting the obligations pursuant to Executive Order 11246, as amended, and these special provisions, such contractor shall immediately notify the SHA.

8. Selection of Subcontractors, Procurement of Materials and Leasing of Equipment: The contractor shall not discriminate on the grounds of race, color, religion, sex, national origin, age or disability in the selection and retention of subcontractors, including procurement of materials and leases of equipment.

a. The contractor shall notify all potential subcontractors and suppliers of his/her EEO obligations under this contract.

b. Disadvantaged business enterprises (DBE), as defined in 49 CFR 26, shall have equal opportunity to compete for and perform subcontracts which the contractor enters into pursuant to this contract. The contractor will use his best efforts to solicit bids from and to utilize DBE subcontractors or subcontractors with meaningful minority group and female representation among their employees. Contractors shall obtain lists of DBE construction firms from SHA personnel.

c. The contractor will use his best efforts to ensure subcontractor compliance with their EEO obligations.

9. **Records and Reports:** The contractor shall keep such records as necessary to document compliance with the EEO requirements. Such records shall be retained for a period of three years following completion of the contract work and shall be available at reasonable times and places for inspection by authorized representatives of the SHA and the FHWA.

a. The records kept by the contractor shall document the following:

(1) The number of minority and non-minority group members and women employed in each work classification on the project;

(2) The progress and efforts being made in cooperation with unions, when applicable, to increase employment opportunities for minorities and women;

(3) The progress and efforts being made in locating, hiring, training, qualifying, and upgrading minority and female employees; and

(4) The progress and efforts being made in securing the services of DBE subcontractors or subcontractors with meaningful minority and female representation among their employees.

b. The contractors will submit an annual report to the SHA each July for the duration of the project, indicating the number of minority, women, and non-minority group employees currently engaged in each work classification required by the contract work. This information is to be reported on Form FHWA-1391. If on-the-job training is being required by special provision, the contractor will be required to collect and report training data.

III NONSEGREGATED FACILITIES

(Applicable to all Federal-aid construction contracts and to all related subcontracts of $10,000 or more.)

a. By submission of this bid, the execution of this contract or subcontract, or the consummation of this material supply agreement or purchase order, as appropriate, the bidder, Federal-aid construction contractor, subcontractor, material supplier, or vendor, as appropriate, certifies that the firm does not maintain or provide for its employees any segregated facilities at any of its establishments, and that the firm does not permit its employees to perform their services at any location, under its control, where segregated facilities are maintained. The firm agrees that a breach of this certification is a violation of the EEO provisions of this contract. The firm further certifies that no employee will be denied access to adequate facilities on the basis of sex or disability.

b. As used in this certification, the term "segregated facilities" means any waiting rooms, work areas, restrooms and washrooms, restaurants and other eating areas, time clocks, locker rooms, and other storage or dressing areas, parking lots, drinking fountains, recreation or entertainment areas, transportation, and housing facilities provided for employees which are segregated by explicit directive, or are, in fact, segregated on the basis of race, color, religion, national origin, age or disability, because of habit, local custom, or otherwise. The only exception will be for the disabled when the demands for accessibility override (e.g. disabled parking).

c. The contractor agrees that it has obtained or will obtain identical certification from proposed subcontractors or material suppliers prior to award of subcontracts or consummation of material supply agreements of $10,000 or more and that it will retain such certifications in its files.

IV. PAYMENT OF PREDETERMINED MINIMUM WAGE

(Applicable to all Federal-aid construction contracts exceeding $2,000 and to all related subcontracts, except for projects located on roadways classified as local roads or rural minor collectors, which are exempt.)

1. General:

a. All mechanics and laborers employed or working upon the site of the work will be paid unconditionally and not less often than once a week and without subsequent deduction or rebate on any account [except such payroll deductions as are permitted by regulations (29 CFR 3)] issued by the Secretary of Labor under the Copeland Act (40 U.S.C. 276c) the full amounts of wages and bona fide fringe benefits (or cash equivalents thereof) due at time of payment. The payment shall be computed at wage rates not less than those contained in the wage determination of the Secretary of Labor (hereinafter "the wage determination") which is attached hereto and made a part hereof, regardless of any contractual relationship which may be alleged to exist between the contractor or its subcontractors and such laborers and mechanics. The wage determination (including any additional classifications and wage rates conformed under paragraph 2 of this Section IV and the DOL poster (WH-1321) or Form FHWA-1495) shall be posted at all times by the contractor and its subcontractors at the site of the work in a prominent and accessible place where it can be easily seen by the workers. For the purpose of this Section, contributions made or costs reasonably anticipated for bona fide fringe benefits under Section 1(b)(2) of the Davis-Bacon Act (40 U.S.C. 276a) on behalf of laborers or mechanics are considered wages paid to such laborers or mechanics, subject to the provisions of Section IV, paragraph 3b, hereof. Also, for the purpose of this Section, regular contributions made or costs incurred for more than a weekly period (but not less often than quarterly) under plans, funds, or programs, which cover the particular weekly period, are deemed to be constructively made or incurred during such weekly period. Such laborers and mechanics shall be paid the appropriate wage rate and fringe benefits on the wage determination for the classification of work actually performed, without regard to skill, except as provided in paragraphs 4 and 5 of this Section IV.

b. Laborers or mechanics performing work in more than one classification may be compensated at the rate specified for each classification for the time actually worked therein, provided, that the employer's payroll records accurately set forth the time spent in each classification in which work is performed.

c. All rulings and interpretations of the Davis-Bacon Act and related acts contained in 29 CFR 1, 3, and 5 are herein incorporated by reference in this contract.

2. Classification:

a. The SHA contracting officer shall require that any class of laborers or mechanics employed under the contract, which is not listed in the wage determination, shall be classified in conformance with the wage determination.

b. The contracting officer shall approve an additional classification, wage rate and fringe benefits only when the following criteria have been met:

(1) the work to be performed by the additional classification requested is not performed by a classification in the wage determination;

(2) the additional classification is utilized in the area by the construction industry;

(3) the proposed wage rate, including any bona fide fringe benefits, bears a reasonable relationship to the wage rates contained in the wage determination; and

(4) with respect to helpers, when such a classification prevails in the area in which the work is performed.

c. If the contractor or subcontractors, as appropriate, the laborers and mechanics (if known) to be employed in the additional classification or their representatives, and the contracting officer agree on the classification and wage rate (including the amount designated for fringe benefits where appropriate), a report of the action taken shall be sent by the contracting officer to the DOL, Administrator of the Wage and Hour Division, Employment Standards Administration, Washington, D.C. 20210. The Wage and Hour Administrator, or an authorized representative, will approve, modify, or disapprove every additional classification action within 30 days of receipt and so advise the contracting officer or will notify the contracting officer within the 30-day period that additional time is necessary.

d. In the event the contractor or subcontractors, as appropriate, the laborers or mechanics to be employed in the additional classification or their representatives, and the contracting officer do not agree on the proposed classification and wage rate (including the amount designated for fringe benefits, where appropriate), the contracting officer shall refer the questions, including the views of all interested parties and the recommendation of the contracting officer, to the Wage and Hour Administrator for determination. Said Administrator, or an authorized representative, will issue a determination within 30 days of receipt and so advise the contracting officer or will notify the contracting officer within the 30-day period that additional time is necessary

e. The wage rate (including fringe benefits where appropriate) determined pursuant to paragraph 2c or 2d of this Section IV shall be paid to all workers performing work in the additional classification from the first day on which work is performed in the classification.

3. Payment of Fringe Benefits:

a. Whenever the minimum wage rate prescribed in the contract for a class of laborers or mechanics includes a fringe benefit which is not expressed as an hourly rate, the contractor or subcontractors, as appropriate, shall either pay the benefit

as stated in the wage determination or shall pay another bona fide fringe benefit or an hourly case equivalent thereof.

b. If the contractor or subcontractor, as appropriate, does not make payments to a trustee or other third person, he/she may consider as a part of the wages of any laborer or mechanic the amount of any costs reasonably anticipated in providing bona fide fringe benefits under a plan or program, provided, that the Secretary of Labor has found, upon the written request of the contractor, that the applicable standards of the Davis-Bacon Act have been met. The Secretary of Labor may require the contractor to set aside in a separate account assets for the meeting of obligations under the plan or program.

4. Apprentices and Trainees (Programs of the U.S. DOL) and Helpers:

a. Apprentices:

(1) Apprentices will be permitted to work at less than the predetermined rate for the work they performed when they are employed pursuant to and individually registered in a bona fide apprenticeship program registered with the DOL, Employment and Training Administration, Bureau of Apprenticeship and Training, or with a State apprenticeship agency recognized by the Bureau, or if a person is employed in his/her first 90 days of probationary employment as an apprentice in such an apprenticeship program, who is not individually registered in the program, but who has been certified by the Bureau of Apprenticeship and Training or a State apprenticeship agency (where appropriate) to be eligible for probationary employment as an apprentice.

(2) The allowable ratio of apprentices to journeyman-level employees on the job site in any craft classification shall not be greater than the ratio permitted to the contractor as to the entire work force under the registered program. Any employee listed on a payroll at an apprentice wage rate, who is not registered or otherwise employed as stated above, shall be paid not less than the applicable wage rate listed in the wage determination for the classification of work actually performed. In addition, any apprentice performing work on the job site in excess of the ratio permitted under the registered program shall be paid not less than the applicable wage rate on the wage determination for the work actually performed. Where a contractor or subcontractor is performing construction on a project in a locality other than that in which its program is registered, the ratios and wage rates (expressed in percentages of the journeyman-level hourly rate) specified in the contractor's or subcontractor's registered program shall be observed.

(3) Every apprentice must be paid at not less than the rate specified in the registered program for the apprentice's level of progress, expressed as a percentage of the journeyman-level hourly rate specified in the applicable wage determination. Apprentices shall be paid fringe benefits in accordance with the provisions of the apprenticeship program. If the apprenticeship program does not specify fringe benefits, apprentices must be paid the full amount of fringe benefits listed on the wage determination for the applicable classification. If the Administrator for the Wage and Hour Division determines that a different practice prevails for the applicable apprentice classification, fringes shall be paid in accordance with that determination.

(4) In the event the Bureau of Apprenticeship and Training, or a State apprenticeship agency recognized by the Bureau, withdraws approval of an apprenticeship program, the contractor or subcontractor will no longer be permitted to utilize apprentices at less than the applicable predetermined rate for the comparable work performed by regular employees until an acceptable program is approved.

b. Trainees:

(1) Except as provided in 29 CFR 5.16, trainees will not be permitted to work at less than the predetermined rate for the work performed unless they are employed pursuant to and individually registered in a program which has received prior approval, evidenced by formal certification by the DOL, Employment and Training Administration.

(2) The ratio of trainees to journeyman-level employees on the job site shall not be greater than permitted under the plan approved by the Employment and Training Administration. Any employee listed on the payroll at a trainee rate who is not registered and participating in a training plan approved by the Employment and Training Administration shall be paid not less than the applicable wage rate on the wage determination for the classification of work actually performed. In addition, any trainee performing work on the job site in excess of the ratio permitted under the registered program shall be paid not less than the applicable wage rate on the wage determination for the work actually performed.

(3) Every trainee must be paid at not less than the rate specified in the approved program for his/her level of progress, expressed as a percentage of the journeyman-level hourly rate specified in the applicable wage determination. Trainees shall be paid fringe benefits in accordance with the provisions of the trainee program. If the trainee program does not mention fringe benefits, trainees shall be paid the full amount of fringe benefits listed on the wage determination unless the Administrator of the Wage and Hour Division determines that there is an apprenticeship program associated with the corresponding journeyman-level wage rate on the wage determination which provides for less than full fringe benefits for apprentices, in which case such trainees shall receive the same fringe benefits as apprentices.

(4) In the event the Employment and Training Administration withdraws approval of a training program, the contractor or subcontractor will no longer be permitted to utilize trainees at less than the applicable predetermined rate for the work performed until an acceptable program is approved.

c. Helpers:

Helpers will be permitted to work on a project if the helper classification is specified and defined on the applicable wage determination or is approved pursuant to the conformance procedure set forth in Section IV.2. Any worker listed on a payroll at a helper wage rate, who is not a helper under an approved definition, shall be paid not less than the applicable wage rate on the wage determination for the classification of work actually performed.

5. Apprentices and Trainees (Programs of the U.S. DOT):

Apprentices and trainees working under apprenticeship and skill training programs which have been certified by the Secretary of Transportation as promoting EEO in connection with Federal-aid highway construction programs are not subject to the requirements of paragraph 4 of this Section IV. The straight time hourly wage rates for apprentices and trainees under such programs will be established by the particular programs. The ratio of apprentices and trainees to journeymen shall not be greater than permitted by the terms of the particular program.

6. Withholding:

The SHA shall upon its own action or upon written request of an authorized representative of the DOL withhold, or cause to be withheld, from the contractor or subcontractor under this contract or any other Federal contract with the same prime contractor, or any other Federally-assisted contract subject to Davis-Bacon prevailing wage requirements which is held by the same prime contractor, as much of the accrued payments or advances as may be considered necessary to pay laborers and mechanics, including apprentices, trainees, and helpers, employed by the contractor or any subcontractor the full amount of wages required by the contract. In the event of failure to pay any laborer or mechanic, including any apprentice, trainee, or helper, employed or working on the site of the work, all or part of the wages required by the contract, the SHA contracting officer may, after written notice to the contractor, take such action as may be necessary to cause the suspension of any further payment, advance, or guarantee of funds until such violations have ceased.

7. Overtime Requirements:

No contractor or subcontractor contracting for any part of the contract work which may require or involve the employment of laborers, mechanics, watchmen, or guards (including apprentices, trainees, and helpers described in paragraphs 4 and 5 above) shall require or permit any laborer, mechanic, watchman, or guard in any workweek in which he/she is employed on such work, to work in excess of 40 hours in such workweek unless such laborer, mechanic, watchman, or guard receives compensation at a rate not less than one-and-one-half times his/her basic rate of pay for all hours worked in excess of 40 hours in such workweek.

8. Violation:

Liability for Unpaid Wages; Liquidated Damages: In the event of any violation of the clause set forth in paragraph 7 above, the contractor and any subcontractor responsible thereof shall be liable to the affected employee for his/her unpaid wages. In addition, such contractor and subcontractor shall be liable to the United States (in the case of work done under contract for the District of Columbia or a territory, to such District or to such territory) for liquidated damages. Such liquidated damages shall be computed with respect to each individual laborer, mechanic, watchman, or guard employed in violation of the clause set forth in paragraph 7, in the sum of $10 for each calendar day on which such employee was required or permitted to work in excess of the standard work week of 40 hours without payment of the overtime wages required by the clause set forth in paragraph 7.

9. Withholding for Unpaid Wages and Liquidated Damages:

The SHA shall upon its own action or upon written request of any authorized representative of the DOL withhold, or cause to be withheld, from any monies payable on account of work performed by the contractor or subcontractor under any such contract or any other Federal contract with the same prime contractor, or any other Federally-assisted contract subject to the Contract Work Hours and Safety Standards Act, which is held by the same prime contractor, such sums as may be determined to be necessary to satisfy any liabilities of such contractor or subcontractor for unpaid wages and liquidated damages as provided in the clause set forth in paragraph 8 above.

V. STATEMENTS AND PAYROLLS

(Applicable to all Federal-aid construction contracts exceeding $2,000 and to all related subcontracts, except for projects located on roadways classified as local roads or rural collectors, which are exempt.)

1. Compliance with Copeland Regulations (29 CFR 3):

The contractor shall comply with the Copeland Regulations of the Secretary of Labor which are herein incorporated by reference.

2. Payrolls and Payroll Records:

a. Payrolls and basic records relating thereto shall be maintained by the contractor and each subcontractor during the course of the work and preserved for a period of 3 years from the date of completion of the contract for all laborers, mechanics, apprentices, trainees, watchmen, helpers, and guards working at the site of the work.

b. The payroll records shall contain the name, social security number, and address of each such employee; his or her correct classification; hourly rates of wages paid (including rates of contributions or costs anticipated for bona fide fringe benefits or cash equivalent thereof the types described in Section 1(b)(2)(B) of the Davis Bacon Act); daily and weekly number of hours worked; deductions made; and actual wages paid. In addition, for Appalachian contracts, the payroll records shall contain a notation indicating whether the employee does, or does not, normally reside in the labor area as defined in Attachment A, paragraph 1. Whenever the Secretary of Labor, pursuant to Section IV, paragraph 3b, has found that the wages of any laborer or mechanic include the amount of any costs reasonably anticipated in providing benefits under a plan or program described in Section 1(b)(2)(B) of the Davis Bacon Act, the contractor and each subcontractor shall maintain records which show that the commitment to provide such benefits is enforceable, that the plan or program is financially responsible, that the plan or program has been communicated in writing to the laborers or mechanics affected, and show the cost anticipated or the actual cost incurred in providing benefits. Contractors or subcontractors employing apprentices or trainees under approved programs shall maintain written evidence of the registration of apprentices and trainees, and ratios and wage rates prescribed in the applicable programs.

c. Each contractor and subcontractor shall furnish, each week in which any contract work is performed, to the SHA resident engineer a payroll of wages paid each of its employees (including apprentices, trainees, and helpers, described in Section IV, paragraphs 4 and 5, and watchmen and guards engaged on work during the preceding weekly payroll period). The payroll submitted shall set out accurately and completely all of the information required to be maintained under paragraph 2b of this Section V. This information may be submitted in any form desired. Optional Form WH-347 is available for this purpose and may be purchased from the Superintendent of Documents (Federal stock number 029-005-0014-1), U.S. Government Printing Office, Washington, D.C. 20402. The prime contractor is responsible for the submission of copies of payrolls by all subcontractors.

d. Each payroll submitted shall be accompanied by a "Statement of Compliance," signed by the contractor or subcontractor or his/her agent who pays or supervises the payment of the persons employed under the contract and shall certify the following:

(1) that the payroll for the payroll period contains the information required to be maintained under paragraph 2b of this Section V and that such information is correct and complete;

(2) that such laborer or mechanic (including each helper, apprentice, and trainee) employed on the contract during the payroll period has been paid the full weekly wages earned, without rebate, either directly or indirectly, and that no deductions have been made either directly or indirectly from the full wages earned, other than permissible deductions as set forth in the Regulations, 29 CFR 3;

(3) that each laborer or mechanic has been paid not less that the applicable wage rate and fringe benefits or cash equivalent for the classification of worked performed, as specified in the applicable wage determination incorporated into the contract.

e. The weekly submission of a properly executed certification set forth on the reverse side of Optional Form WH-347 shall satisfy the requirement for submission of the "Statement of Compliance" required by paragraph 2d of this Section V.

f. The falsification of any of the above certifications may subject the contractor to civil or criminal prosecution under 18 U.S.C. 1001 and 31 U.S.C. 231.

g. The contractor or subcontractor shall make the records required under paragraph 2b of this Section V available for inspection, copying, or transcription by authorized representatives of the SHA, the FHWA, or the DOL, and shall permit such representatives to interview employees during working hours on the job. If the contractor or subcontractor fails to submit the required records or to make them available, the SHA, the FHWA, the DOL, or all may, after written notice to the contractor, sponsor, applicant, or owner, take such actions as may be necessary to cause the suspension of any further payment, advance, or guarantee of funds. Furthermore, failure to submit the required records upon request or to make such records available may be grounds for debarment action pursuant to 29 CFR 5.12.

VI. RECORD OF MATERIALS, SUPPLIES, AND LABOR

(As of May 22, 2007, Form FHWA-47 is no longer required.)

VII. SUBLETTING OR ASSIGNING THE CONTRACT

1. The contractor shall perform with its own organization contract work amounting to not less than 30 percent (or a greater percentage if specified elsewhere in the contract) of the total original contract price, excluding any specialty items designated by the State. Specialty items may be performed by subcontract and the amount of any such specialty items performed may be deducted from the total original contract price before computing the amount of work required to be performed by the contractor's own organization (23 CFR 635).

a. "Its own organization" shall be construed to include only workers employed and paid directly by the prime contractor and equipment owned or rented by the prime contractor, with or without operators. Such term does not include employees or equipment of a subcontractor, assignee, or agent of the prime contractor.

b. "Specialty Items" shall be construed to be limited to work that requires highly specialized knowledge, abilities, or equipment not ordinarily available in the type of contracting organizations qualified and expected to bid on the contract as a whole and in general are to be limited to minor components of the overall contract.

2. The contract amount upon which the requirements set forth in paragraph 1 of Section VII is computed includes the cost of material and manufactured products which are to be purchased or produced by the contractor under the contract provisions.

3. The contractor shall furnish (a) a competent superintendent or supervisor who is employed by the firm, has full authority to direct performance of the work in accordance with the contract requirements, and is in charge of all construction operations (regardless of who performs the work) and (b) such other of its own organizational resources (supervision, management, and engineering services) as the SHA contracting officer determines is necessary to assure the performance of the contract.

4. No portion of the contract shall be sublet, assigned or otherwise disposed of except with the written consent of the SHA contracting officer, or authorized representative, and such consent when given shall not be construed to relieve the contractor of any responsibility for the fulfillment of the contract. Written consent will be given only after the SHA has assured that each subcontract is evidenced in writing and that it contains all pertinent provisions and requirements of the prime contract.

VIII. SAFETY: ACCIDENT PREVENTION

1. In the performance of this contract the contractor shall comply with all applicable Federal, State, and local laws governing safety, health, and sanitation (23 CFR 635). The contractor shall provide all safeguards, safety devices and protective equipment and take any other needed actions as it determines, or as the SHA contracting officer may determine, to be reasonably necessary to protect the life and health of employees on the job and the safety of the public and to protect property in connection with the performance of the work covered by the contract.

2. It is a condition of this contract, and shall be made a condition of each subcontract, which the contractor enters into pursuant to this contract, that the contractor and any subcontractor shall not permit any employee, in performance of the contract, to work in surroundings or under conditions which are unsanitary, hazardous or dangerous to his/her health or safety, as determined under construction safety and health standards (29 CFR 1926) promulgated by the Secretary of Labor, in accordance with Section 107 of the Contract Work Hours and Safety Standards Act (40 U.S.C. 333).

3. Pursuant to 29 CFR 1926.3, it is a condition of this contract that the Secretary of Labor or authorized representative thereof, shall have right of entry to any site of contract performance to inspect or investigate the matter of compliance with the construction safety and health standards and to carry out the duties of the Secretary under Section 107 of the Contract Work Hours and Safety Standards Act (40 U.S.C. 333).

IX. FALSE STATEMENTS CONCERNING HIGHWAY PROJECTS

In order to assure high quality and durable construction in conformity with approved plans and specifications and a high degree of reliability on statements and representations made by engineers, contractors, suppliers, and workers on Federal-aid highway projects, it is essential that all persons concerned with the project perform their functions as carefully, thoroughly, and honestly as possible. Willful falsification, distortion, or misrepresentation with respect to any facts related to the project is a violation of Federal law. To prevent any misunderstanding regarding the seriousness of these and similar acts, the following notice shall be posted on each Federal-aid highway project (23 CFR 635) in one or more places where it is readily available to all persons concerned with the project:

NOTICE TO ALL PERSONNEL ENGAGED ON FEDERAL-AID HIGHWAY PROJECTS

18 U.S.C. 1020 reads as follows:

"Whoever being an officer, agent, or employee of the United States, or any State or Territory, or whoever, whether a person, association, firm, or corporation, knowingly makes any false statement, false representation, or false report as to the character, quality, quantity, or cost of the material used or to be used, or the quantity or quality of the work performed or to be performed, or the cost thereof in connection with the submission of plans, maps, specifications, contracts, or costs of construction on any highway or related project submitted for approval to the Secretary of Transportation; or

Whoever knowingly makes any false statement, false representation, false report or false claim with respect to the character, quality, quantity, or cost of any work performed or to be performed, or materials furnished or to be furnished, in connection with the construction of any highway or related project approved by the Secretary of Transportation; or

Whoever knowingly makes any false statement or false representation as to material fact in any statement, certificate, or report submitted pursuant to provisions of the Federal-aid Roads Act approved July 1, 1916, (39 Stat. 355), as amended and supplemented;

Shall be fined not more that $10,000 or imprisoned not more than 5 years or both."

X. IMPLEMENTATION OF CLEAN AIR ACT AND FEDERAL WATER POLLUTION CONTROL ACT

(Applicable to all Federal-aid construction contracts and to all related subcontracts of $100,000 or more.)

By submission of this bid or the execution of this contract, or subcontract, as appropriate, the bidder, Federal-aid construction contractor, or subcontractor, as appropriate, will be deemed to have stipulated as follows:

1. That any facility that is or will be utilized in the performance of this contract, unless such contract is exempt under the Clean Air Act, as amended (42 U.S.C. 1857 et seq., as amended by Pub. L. 91-604), and under the Federal Water Pollution Control Act, as amended (33 U.S.C. 1251 et seq., as amended by Pub. L. 92-500), Executive Order 11738, and regulations in implementation thereof (40 CFR 15) is not listed, on the date of contract award, on the U.S. Environmental Protection Agency (EPA) List of Violating Facilities pursuant to 40 CFR 15.20.

2. That the firm agrees to comply and remain in compliance with all the requirements of Section 114 of the Clean Air Act and Section 308 of the Federal Water Pollution Control Act and all regulations and guidelines listed thereunder.

3. That the firm shall promptly notify the SHA of the receipt of any communication from the Director, Office of Federal Activities, EPA, indicating that a facility that is or will be utilized

for the contract is under consideration to be listed on the EPA List of Violating Facilities.

4. That the firm agrees to include or cause to be included the requirements of paragraph 1 through 4 of this Section X in every nonexempt subcontract, and further agrees to take such action as the government may direct as a means of enforcing such requirements.

XI. CERTIFICATION REGARDING DEBARMENT, SUSPENSION, INELIGIBILITY AND VOLUNTARY EXCLUSION

1. Instructions for Certification - Primary Covered Transactions:

(Applicable to all Federal-aid contracts - 49 CFR 29)

a. By signing and submitting this proposal, the prospective primary participant is providing the certification set out below.

b. The inability of a person to provide the certification set out below will not necessarily result in denial of participation in this covered transaction. The prospective participant shall submit an explanation of why it cannot provide the certification set out below. The certification or explanation will be considered in connection with the department or agency's determination whether to enter into this transaction. However, failure of the prospective primary participant to furnish a certification or an explanation shall disqualify such a person from participation in this transaction.

c. The certification in this clause is a material representation of fact upon which reliance was placed when the department or agency determined to enter into this transaction. If it is later determined that the prospective primary participant knowingly rendered an erroneous certification, in addition to other remedies available to the Federal Government, the department or agency may terminate this transaction for cause of default.

d. The prospective primary participant shall provide immediate written notice to the department or agency to whom this proposal is submitted if any time the prospective primary participant learns that its certification was erroneous when submitted or has become erroneous by reason of changed circumstances.

e. The terms "covered transaction," "debarred," "suspended," "ineligible," "lower tier covered transaction," "participant," "person," "primary covered transaction," "principal," "proposal," and "voluntarily excluded," as used in this clause, have the meanings set out in the Definitions and Coverage sections of rules implementing Executive Order 12549. You may contact the department or agency to which this proposal is submitted for assistance in obtaining a copy of those regulations.

f. The prospective primary participant agrees by submitting this proposal that, should the proposed covered transaction be entered into, it shall not knowingly enter into any lower tier covered transaction with a person who is debarred, suspended, declared ineligible, or voluntarily excluded from participation in this covered transaction, unless authorized by the department or agency entering into this transaction.

g. The prospective primary participant further agrees by submitting this proposal that it will include the clause titled "Certification Regarding Debarment, Suspension, Ineligibility and Voluntary Exclusion-Lower Tier Covered Transaction," provided by the department or agency entering into this covered transaction, without modification, in all lower tier covered transactions and in all solicitations for lower tier covered transactions.

h. A participant in a covered transaction may rely upon a certification of a prospective participant in a lower tier covered transaction that is not debarred, suspended, ineligible, or voluntarily excluded from the covered transaction, unless it knows that the certification is erroneous. A participant may decide the method and frequency by which it determines the eligibility of its principals. Each participant may, but is not required to, check the nonprocurement portion of the "Lists of Parties Excluded From Federal Procurement or Nonprocurement Programs" (Nonprocurement List) which is compiled by the General Services Administration.

i. Nothing contained in the foregoing shall be construed to require establishment of a system of records in order to render in good faith the certification required by this clause. The knowledge and information of participant is not required to exceed that which is normally possessed by a prudent person in the ordinary course of business dealings.

j. Except for transactions authorized under paragraph f of these instructions, if a participant in a covered transaction knowingly enters into a lower tier covered transaction with a person who is suspended, debarred, ineligible, or voluntarily excluded from participation in this transaction, in addition to other remedies available to the Federal Government, the department or agency may terminate this transaction for cause or default.

* * * * *

Certification Regarding Debarment, Suspension, Ineligibility and Voluntary Exclusion—Primary Covered Transactions

1. The prospective primary participant certifies to the best of its knowledge and belief, that it and its principals:

a. Are not presently debarred, suspended, proposed for debarment, declared ineligible, or voluntarily excluded from covered transactions by any Federal department or agency;

b. Have not within a 3-year period preceding this proposal been convicted of or had a civil judgment rendered against them for commission of fraud or a criminal offense in connection with obtaining, attempting to obtain, or performing a public (Federal, State or local) transaction or contract under a public transaction; violation of Federal or State antitrust statutes or commission of embezzlement, theft, forgery, bribery, falsification or destruction of records, making false statements, or receiving stolen property;

c. Are not presently indicted for or otherwise criminally or civilly charged by a governmental entity (Federal, State or local) with commission of any of the offenses enumerated in paragraph 1b of this certification; and

d. Have not within a 3-year period preceding this application/proposal had one or more public transactions (Federal, State or local) terminated for cause or default.

2. Where the prospective primary participant is unable to certify to any of the statements in this certification, such prospective participant shall attach an explanation to this proposal.

* * * * *

2. Instructions for Certification - Lower Tier Covered Transactions:

(Applicable to all subcontracts, purchase orders and other lower tier transactions of $25,000 or more - 49 CFR 29)

a. By signing and submitting this proposal, the prospective lower tier is providing the certification set out below.

b. The certification in this clause is a material representation of fact upon which reliance was placed when this transaction was entered into. If it is later determined that the prospective lower tier participant knowingly rendered an erroneous certification, in addition to other remedies available to the Federal Government, the department or agency with which this transaction originated may pursue available remedies, including suspension and/or debarment.

c. The prospective lower tier participant shall provide immediate written notice to the person to which this proposal is submitted if at any time the prospective lower tier participant learns that its certification was erroneous by reason of changed circumstances.

d. The terms "covered transaction," "debarred," "suspended," "ineligible," "primary covered transaction," "participant," "person," "principal," "proposal," and "voluntarily excluded," as used in this clause, have the meanings set out in the Definitions and Coverage sections of rules implementing Executive Order 12549. You may contact the person to which this proposal is submitted for assistance in obtaining a copy of those regulations.

e. The prospective lower tier participant agrees by submitting this proposal that, should the proposed covered transaction be entered into, it shall not knowingly enter into any lower tier covered transaction with a person who is debarred, suspended, declared ineligible, or voluntarily excluded from participation in this covered transaction, unless authorized by the department or agency with which this transaction originated.

f. The prospective lower tier participant further agrees by submitting this proposal that it will include this clause titled "Certification Regarding Debarment, Suspension, Ineligibility and Voluntary Exclusion-Lower Tier Covered Transaction," without modification, in all lower tier covered transactions and in all solicitations for lower tier covered transactions.

g. A participant in a covered transaction may rely upon a certification of a prospective participant in a lower tier covered transaction that is not debarred, suspended, ineligible, or voluntarily excluded from the covered transaction, unless it knows that the certification is erroneous. A participant may decide the method and frequency by which it determines the eligibility of its principals. Each participant may, but is not required to, check the Nonprocurement List.

h. Nothing contained in the foregoing shall be construed to require establishment of a system of records in order to render in good faith the certification required by this clause. The knowledge and information of participant is not required to exceed that which is normally possessed by a prudent person in the ordinary course of business dealings.

i. Except for transactions authorized under paragraph e of these instructions, if a participant in a covered transaction knowingly enters into a lower tier covered transaction with a person who is suspended, debarred, ineligible, or voluntarily excluded from participation in this transaction, in addition to other remedies available to the Federal Government, the department or agency with which this transaction originated may pursue available remedies, including suspension and/or debarment.

* * * * *

Certification Regarding Debarment, Suspension, Ineligibility and Voluntary Exclusion-Lower Tier Covered Transactions

1. The prospective lower tier participant certifies, by submission of this proposal, that neither it nor its principals is presently debarred, suspended, proposed for debarment, declared ineligible, or voluntarily excluded from participation in this transaction by any Federal department or agency.

2. Where the prospective lower tier participant is unable to certify to any of the statements in this certification, such prospective participant shall attach an explanation to this proposal.

* * * * *

XII. CERTIFICATION REGARDING USE OF CONTRACT FUNDS FOR LOBBYING

(Applicable to all Federal-aid construction contracts and to all related subcontracts which exceed $100,000 - 49 CFR 20)

1. The prospective participant certifies, by signing and submitting this bid or proposal, to the best of his or her knowledge and belief, that:

a. No Federal appropriated funds have been paid or will be paid, by or on behalf of the undersigned, to any person for influencing or attempting to influence an officer or employee of any Federal agency, a Member of Congress, an officer or employee of Congress, or an employee of a Member of Congress in connection with the awarding of any Federal contract, the making of any Federal grant, the making of any Federal loan, the entering into of any cooperative agreement, and the extension, continuation, renewal, amendment, or modification of any Federal contract, grant, loan, or cooperative agreement.

b. If any funds other than Federal appropriated funds have been paid or will be paid to any person for influencing or attempting to influence an officer or employee of any Federal agency, a Member of Congress, an officer or employee of Congress, or an employee of a Member of Congress in connection with this Federal contract,

grant, loan, or cooperative agreement, the undersigned shall complete and submit Standard Form-LLL, "Disclosure Form to Report Lobbying," in accordance with its instructions.

2. This certification is a material representation of fact upon which reliance was placed when this transaction was made or entered into. Submission of this certification is a prerequisite for making or entering into this transaction imposed by 31 U.S.C. 1352. Any person who fails to file the required certification shall be subject to a civil penalty of not less than $10,000 and not more than $100,000 for each such failure.

3. The prospective participant also agrees by submitting his or her bid or proposal that he or she shall require that the language of this certification be included in all lower tier subcontracts, which exceed $100,000 and that all such recipients shall certify and disclose accordingly.

Female and Minority Goals

To comply with Section II, "Nondiscrimination," of "Required Contract Provisions Federal-Aid Construction Contracts," the following are goals for female and minority utilization goals for Federal-aid construction contracts and subcontracts that exceed $10,000:

The nationwide goal for female utilization is 6.9 percent.

The goals for minority utilization [45 Fed Reg 65984 (10/3/1980)] are as follows:

Minority Utilization Goals

Economic Area		Goal (Percent)
174	Redding CA: Non-SMSA Counties: CA Lassen; CA Modoc; CA Plumas; CA Shasta; CA Siskiyou; CA Tehema	6.8
175	Eureka, CA Non-SMSA Counties: CA Del Norte; CA Humboldt; CA Trinity	6.6
176	San Francisco-Oakland-San Jose, CA: SMSA Counties: 7120 Salinas-Seaside-Monterey, CA CA Monterey 7360 San Francisco-Oakland CA Alameda; CA Contra Costa; CA Marin; CA San Francisco; CA San Mateo 7400 San Jose, CA CA Santa Clara, CA 7485 Santa Cruz, CA CA Santa Cruz 7500 Santa Rosa CA Sonoma 8720 Vallejo-Fairfield-Napa, CA CA Napa; CA Solano Non-SMSA Counties: CA Lake; CA Mendocino; CA San Benito	 28.9 25.6 19.6 14.9 9.1 17.1 23.2
177	Sacramento, CA: SMSA Counties: 6920 Sacramento, CA CA Placer; CA Sacramento; CA Yolo Non-SMSA Counties CA Butte; CA Colusa; CA El Dorado; CA Glenn; CA Nevada; CA Sierra; CA Sutter; CA Yuba	 16.1 14.3
178	Stockton-Modesto, CA: SMSA Counties: 5170 Modesto, CA CA Stanislaus 8120 Stockton, CA CA San Joaquin Non-SMSA Counties CA Alpine; CA Amador; CA Calaveras; CA Mariposa; CA Merced; CA Toulumne	 12.3 24.3 19.8
179	Fresno-Bakersfield, CA SMSA Counties: 0680 Bakersfield, CA CA Kern 2840 Fresno, CA CA Fresno Non-SMSA Counties: CA Kings; CA Madera; CA Tulare	 19.1 26.1 23.6

180	Los Angeles, CA: SMSA Counties: 0360 Anaheim-Santa Ana-Garden Grove, CA CA Orange 4480 Los Angeles-Long Beach, CA CA Los Angeles 6000 Oxnard-Simi Valley-Ventura, CA CA Ventura 6780 Riverside-San Bernardino-Ontario, CA CA Riverside; CA San Bernardino 7480 Santa Barbara-Santa Maria-Lompoc, CA CA Santa Barbara Non-SMSA Counties CA Inyo; CA Mono; CA San Luis Obispo	 11.9 28.3 21.5 19.0 19.7 24.6
181	San Diego, CA: SMSA Counties 7320 San Diego, CA CA San Diego Non-SMSA Counties CA Imperial	 16.9 18.2

For each July during which work is performed under the contract, you and each non-material-supplier subcontractor with a subcontract of $10,000 or more must complete Form FHWA PR-1391 (Appendix C to 23 CFR 230). Submit the forms by August 15.

Training

This section applies if a number of trainees or apprentices is specified in the special provisions.
As part of your equal opportunity affirmative action program, provide on-the-job training to develop full journeymen in the types of trades or job classifications involved.
You have primary responsibility for meeting this training requirement.
If you subcontract a contract part, determine how many trainees or apprentices are to be trained by the subcontractor.
Include these training requirements in your subcontract.
Where feasible, 25 percent of apprentices or trainees in each occupation must be in their 1st year of apprenticeship or training.
Distribute the number of apprentices or trainees among the work classifications on the basis of your needs and the availability of journeymen in the various classifications within a reasonable recruitment area.
Before starting work, submit to the County of San Luis Obispo:

1. Number of apprentices or trainees to be trained for each classification
2. Training program to be used
3. Training starting date for each classification

Obtain the County's approval for this submitted information before you start work. The County credits you for each apprentice or trainee you employ on the work who is currently enrolled or becomes enrolled in an approved program.
The primary objective of this section is to train and upgrade minorities and women toward journeymen status. Make every effort to enroll minority and women apprentices or trainees, such as conducting systematic and direct recruitment through public and private sources likely to yield minority and women apprentices or trainees, to the extent they are available within a reasonable recruitment area. Show that you have made the efforts. In making these efforts, do not discriminate against any applicant for training.
Do not employ as an apprentice or trainee an employee:

1. In any classification in which the employee has successfully completed a training course leading to journeyman status or in which the employee has been employed as a journeyman
2. Who is not registered in a program approved by the US Department of Labor, Bureau of Apprenticeship and Training

Ask the employee if the employee has successfully completed a training course leading to journeyman status or has been employed as a journeyman. Your records must show the employee's answers to the questions.

In your training program, establish the minimum length and training type for each classification. The County of San Luis Obispo and FHWA approves a program if one of the following is met:

1. It is calculated to:

    1.1. Meet the your equal employment opportunity responsibilities
    1.2. Qualify the average apprentice or trainee for journeyman status in the classification involved by the end of the training period

2. It is registered with the U.S. Department of Labor, Bureau of Apprenticeship and Training and it is administered in a way consistent with the equal employment responsibilities of federal-aid highway construction contracts

Obtain the State's approval for your training program before you start work involving the classification covered by the program. Provide training in the construction crafts, not in clerk-typist or secretarial-type positions. Training is allowed in lower level management positions such as office engineers, estimators, and timekeepers if the training is oriented toward construction applications. Training is allowed in the laborer classification if significant and meaningful training is provided and approved by the division office. Off-site training is allowed if the training is an integral part of an approved training program and does not make up a significant part of the overall training.
The County reimburses you 80 cents per hour of training given an employee on this contract under an approved training program:

1. For on-site training
2. For off-site training if the apprentice or trainee is currently employed on a federal-aid project and you do at least one of the following:

    2.1. Contribute to the cost of the training
    2.2. Provide the instruction to the apprentice or trainee
    2.3. Pay the apprentice's or trainee's wages during the off-site training period

3. If you comply this section.

Each apprentice or trainee must:

1. Begin training on the project as soon as feasible after the start of work involving the apprentice's or trainee's skill
2. Remain on the project as long as training opportunities exist in the apprentice's or trainee's work classification or until the apprentice or trainee has completed the training program

Furnish the apprentice or trainee:

1. Copy of the program you will comply with in providing the training
2. Certification showing the type and length of training satisfactorily completed

Maintain records and submit reports documenting your performance under this section.

SECTION 8. MATERIALS

8-1.01 PREQUALIFIED AND TESTED SIGNING AND DELINEATION MATERIALS:

The Department maintains the following list of Prequalified and Tested Signing and Delineation Materials. The Engineer shall not be precluded from sampling and testing products on the list of Prequalified and Tested Signing and Delineation Materials.

The manufacturer of products on the list of Prequalified and Tested Signing and Delineation Materials shall furnish the Engineer a Certificate of Compliance in conformance with the provisions in Section 6-1.07, "Certificates of Compliance," of the Standard Specifications for each type of traffic product supplied.

For those categories of materials included on the list of Prequalified and Tested Signing and Delineation Materials, only those products shown within the listing may be used in the work. Other categories of products, not included on the list of Prequalified and Tested Signing and Delineation Materials, may be used in the work provided they conform to the requirements of the Standard Specifications.

Materials and products may be added to the list of Prequalified and Tested Signing and Delineation Materials if the manufacturer submits a New Product Information Form to the New Product Coordinator at the Transportation Laboratory. Upon a Departmental request for samples, sufficient samples shall be submitted to permit performance of required tests. Approval of materials or products will depend upon compliance with the specifications and tests the Department may elect to perform.

PAVEMENT MARKERS, PERMANENT TYPE:

Retroreflective With Abrasion Resistant Surface (ARS)

A. Apex, Model 921AR (100 mm x 100 mm) {4 inches x 4 inches}
B. Avery Dennison (formerly Stimsonite), Models C88 (100 mm x 100 mm) {4 inches x 4 inches}, 911 (100 mm x 100 mm) {4 inches x 4 inches} and 953 (70 mm x 114 mm) {2.75 inches x 4.5 inches}
C. Ray-O-Lite, Model "AA" ARS (100 mm x 100 mm) {4 inches x 4 inches}
D. 3M Series 290 (89 mm x 100 mm) {3.5 inches x 4 inches}
E. 3M Series 290 PSA, with pressure sensitive adhesive pad (89 mm x 100 mm) {3.5 inches x 4 inches}

Retroreflective With Abrasion Resistant Surface (ARS)
(for recessed applications only)

A. Avery Dennison (formerly Stimsonite), Model 948 (58 mm x 119 mm) {2.3 inches x 4.7 inches}
B. Avery Dennison (formerly Stimsonite), Model 944SB (51 mm x 100 mm) {2 inches x 4 inches}*
C. Ray-O-Lite, Model 2002 (58 mm x 117 mm) {2.3 inches x 4.6 inches}
D. Ray-O-Lite, Model 2004 ARS (51 mm x 100 mm) {2 inches x 4 inches}*

*For use only in 114 mm {4.5 inches} wide (older) recessed slots

Non-Reflective, 100 mm {4 inches} Round

A. Alpine Products, "D-Dot" and "ANR" (ABS)
B. Apex Universal (Ceramic)

C. Apex Universal, Models 929 (ABS) and 929PP (Polypropylene)
D. Elgin Molded Plastics, "Empco-Lite" Model 900 (ABS)
E. Glowlite (Ceramic)
F. Hi-Way Safety, Inc., Models P20-2000W and 2001Y (ABS)
G. Interstate Sales, "Diamond Back" (ABS) and (Polypropylene)
H. Novabrite Models Cdot (White) Cdot-y (Yellow), Ceramic
I. Novabrite Models Adot-w (White) Adot-y (Yellow), (ABS)
J. Novabrite Models Pdot-w (White) Pdot-y (Yellow), Polypropylene
K. Road Creations, Model RCB4NR (Acrylic)
L. Three D Traffic Works TD10000 (ABS), TD10500 (Polypropylene)
M. Zumar Industries, "Titan TM40A" (ABS)

PAVEMENT MARKERS, TEMPORARY TYPE:

Temporary Markers For Long Term Day/Night Use (6 months or less)
A. Apex Universal, Model 924 (100 mm x 100 mm) {4 inches x 4 inches}
B. Elgin Molded Plastics, "Empco-Lite" Model 901 (100 mm x 100 mm) {4 inches x 4 inches}
C. Road Creations, Model R41C (100 mm x 100 mm) {4 inches x 4 inches}
D. Vega Molded Products "Temporary Road Marker" (75 mm x 100 mm) {3 inches x 4 inches}

Temporary Markers For Short Term Day/Night Use (14 days or less)
(For seal coat or chip seal applications, clear protective covers are required)

A. Apex Universal, Model 932
B. Bunzl Extrusion, Models T.O.M., T.R.P.M., and "HH" (High Heat)
C. Hi-Way Safety, Inc., Model 1280/1281

STRIPING AND PAVEMENT MARKING MATERIAL:

Permanent Traffic Striping and Pavement Marking Tape
A. Advanced Traffic Marking, Series 300 and 400
B. Brite-Line, Series 1000
C. Brite-Line, "DeltaLine XRP"
D. Swarco Industries, "Director 35" (For transverse application only)
E. Swarco Industries, "Director 60"
F. 3M, "Stamark" Series 380 and 5730
G. 3M, "Stamark" Series 420 (For transverse application only)

Temporary (Removable) Striping and Pavement Marking Tape (6 months or less)
A. Advanced Traffic Marking, Series 200
B. Brite-Line, Series 100
C. Garlock Rubber Technologies, Series 2000
D. P.B. Laminations, Aztec, Grade 102
E. Swarco Industries, "Director-2"
F. Trelleborg Industri, R140 Series
G. 3M, Series 620 "CR", and Series A750
H. 3M, Series A145, Removable Black Line Mask
(Black Tape: for use only on Asphalt Concrete Surfaces)
I. Advanced Traffic Marking Black "Hide-A-Line"

(Black Tape: for use only on Asphalt Concrete Surfaces)

J. Brite-Line "BTR" Black Removable Tape
(Black Tape: for use only on Asphalt Concrete Surfaces)

K. Trelleborg Industri, RB-140
(Black Tape: for use only on Asphalt Concrete Surfaces)

Preformed Thermoplastic (Heated in place)

A. Avery Dennison, "Hotape"
B. Flint Trading, "Premark," "Premark 20/20 Flex," and "Premark 20/20 Flex Plus"

Ceramic Surfacing Laminate, 150 mm x 150 mm {6 inches x 6 inches}

A. Safeline Industries/Highway Ceramics, Inc.

CLASS 1 DELINEATORS

One Piece Driveable Flexible Type, 1700 mm {66 inches}

A. Bunzl Extrusion, "Flexi-Guide Models 400 and 566"
B. Carsonite, Curve-Flex CFRM-400
C. Carsonite, Roadmarker CRM-375
D. FlexStake, Model 654 TM
E. GreenLine Models HWD1-66 and CGD1-66
F. J. Miller Industries, Model JMI-375 (with soil anchor)

Special Use Type, 1700 mm {66 inches}

A. Bunzl Extrusion, Model FG 560 (with 450 mm {18 inches} U-Channel base)
B. Carsonite, "Survivor" (with 450 mm {18 inches} U-Channel base)
C. Carsonite, Roadmarker CRM-375 (with 450 mm {18 inches} U-Channel base)
D. FlexStake, Model 604
E. GreenLine Models HWDU and CGD (with 450 mm {18 inches} U-Channel base)
F. Impact Recovery Model D36, with #105 Driveable Base
G. Safe-Hit with 200 mm {8 inches}pavement anchor (SH248-GP1)
H. Safe-Hit with 380 mm {15 inches} soil anchor (SH248-GP2) and with 450 mm {18 inches}soil anchor (SH248-GP3)

Surface Mount Type, 1200 mm {48 inches}

A. Bent Manufacturing Company, Masterflex Model MF-180EX-48
B. Carsonite, "Super Duck II"
C. FlexStake, Surface Mount, Models 704 and 754 TM
D. Impact Recovery Model D48, with #101 Fixed (Surface-Mount) Base
E. Three D Traffic Works "Channelflex" ID No. 522248W

CHANNELIZERS

Surface Mount Type, 900 mm {36 inches}

A. Bent Manufacturing Company, Masterflex Models MF-360-36 (Round) and MF-180-36 (Flat)
B. Bunzl Extrusion, Flexi-Guide Models FG300LD and FG300UR
C. Carsonite, "Super Duck" (Flat SDF-436, Round SDR-336)
D. Carsonite, "Super Duck II" Model SDCF203601MB "The Channelizer"
E. FlexStake, Surface Mount, Models 703 and 753 TM
F. GreenLine, Model SMD-36

G. Hi-Way Safety, Inc. "Channel Guide Channelizer" Model CGC36
H. Impact Recovery Model D36, with #101 Fixed (Surface-Mount) Base
I. Repo, Models 300 and 400
J. Safe-Hit, Guide Post, Model SH236SMA
K. The Line Connection, "Dura-Post" Model DP36-3 (Permanent)
L. The Line Connection, "Dura-Post" Model DP36-3C (Temporary)
M. Three D Traffic Works "Channelflex" ID No. 522053W

Lane Separation System
A. Bunzl "Flexi-Guide (FG) 300 Curb System"
B. Qwick Kurb, "Klemmfix Guide System"
C. Recycled Technology, Inc. "Safe-Lane System"

CONICAL DELINEATORS, 1070 mm {42 inches}
(For 700 mm Traffic Cones, see Standard Specifications)
A. Bent Manufacturing Company "T-Top"
B. Plastic Safety Systems "Navigator-42"
C. Radiator Specialty Company "Enforcer"
D. Roadmaker Company "Stacker"
E. TrafFix Devices "Grabber"
F. Three D Traffic Works "Ringtop" TD7000, ID No. 742143

OBJECT MARKERS

Type "K", 450 mm {18 inches}
A. Bunzl, Model FG318PE
B. Carsonite, Model SMD 615
C. FlexStake, Model 701 KM
D. Repo, Models 300 and 400
E. Safe-Hit, Model SH718SMA
F. The Line Connection, Model DP21-4K

Type "K-4" / "Q" Object Markers, 600 mm {24 inches}
A. Bent Manufacturing "Masterflex" Model MF-360-24
B. Bunzl Extrusion, Model FG324PE
C. Carsonite, Super Duck II
D. FlexStake, Model 701KM
E. Repo, Models 300 and 400
F. Safe-Hit, Models SH8 24SMA_WA and SH8 24GP3_WA
G. The Line Connection, Model DP21-4Q
H. Three D Traffic Works "Q" Marker, ID No. 531702W

CONCRETE BARRIER MARKERS AND TEMPORARY RAILING (TYPE K) REFLECTORS:

Impactable Type
A. ARTUK, "FB"
B. Bunzl Extrusion, Models PCBM-12 and PCBM-T12
C. Duraflex Corp., "Flexx 2020" and "Electriflexx"
D. Hi-Way Safety, Inc., Model GMKRM100
E. Plastic Safety Systems "BAM" Models OM-BARR and OM-BWAR

F. Sun-Lab Technology, "Safety Guide Light Model TM-5"
G. Three D Traffic Works "Roadguide" 9304 Series, ID No. 903176 (One-Way), ID No. 903215 (Two-Way)

Non-Impactable Type
A. ARTUK, JD Series
B. Plastic Safety Systems "BAM" Models OM-BITARW and OM-BITARA
C. Vega Molded Products, Models GBM and JD

METAL BEAM GUARD RAIL POST MARKERS
(For use to the left of traffic)
A. Bunzl Extrusion, "Mini" (75 mm x 254 mm) {3 inches x 10 inches}
B. Creative Building Products, "Dura-Bull, Model 11201"
C. Duraflex Corp., "Railrider"

CONCRETE BARRIER DELINEATORS, 400 mm {16 inches}
(For use to the right of traffic)
A. Bunzl Extrusion, Model PCBM T-16
B. Safe-Hit, Model SH216RBM
C. Sun-Lab Technology, "Safety Guide Light, Model TM16," (75 mm x 300 mm) {3 inches x 12 inches}
D. Three D Traffic Works "Roadguide" ID No. 904364 (White), ID No. 904390 (Yellow)

CONCRETE BARRIER-MOUNTED MINI-DRUM (260 mm x 360 mm x 570 mm) {10 inches x 14 inches x 22 inches}
A. Stinson Equipment Company "SaddleMarker"

SOUND WALL DELINEATOR
(Applied vertically. Place top of 75 mm x 300 mm {3 inches x 12 inches} reflective element at 1200 mm {48 inches}above plane of roadway)
A. Bunzl Extrusion, PCBM S-36
B. Sun-Lab Technology, "Safety Guide Light, Model SM12," (75 mm x 300 mm) {3 inches x 12 inches}

GUARD RAILING DELINEATOR
(Place top of reflective element at 1200 mm {48 inches}above plane of roadway)

Wood Post Type, 686 mm {27 inches}
A. Bunzl Extrusion, FG 427 and FG 527
B. Carsonite, Model 427
C. FlexStake, Model 102 GR
D. GreenLine GRD 27
E. J. Miller Model JMI-375G
F. Safe-Hit, Model SH227GRD
G. Three D Traffic Works "Guardflex" TD9100 Series, ID No. 510476

Steel Post Type
A. Carsonite, Model CFGR-327 with CFGRBK300 Mounting Bracket

RETROREFLECTIVE SHEETING

Channelizers, Barrier Markers, and Delineators

A. Avery Dennison T-6500 Series (Formerly Stimsonite, Series 6200) (For rigid substrate devices only)
B. Avery Dennison WR-6100 Series
C. Nippon Carbide, Flexible Ultralite Grade (ULG) II
D. Reflexite, PC-1000 Metalized Polycarbonate
E. Reflexite, AC-1000 Acrylic
F. Reflexite, AP-1000 Metalized Polyester
G. Reflexite, Conformalight, AR-1000 Abrasion Resistant Coating
H. 3M, High Intensity

Traffic Cones, 330 mm {13 inches} Sleeves

A. Reflexite SB (Polyester), Vinyl or "TR" (Semi-transparent)

Traffic Cones, 100 mm and 150 mm {4 inches x 6 inches} Sleeves

A. Nippon Carbide, Flexible Ultralite Grade (ULG) II
B. Reflexite, Vinyl, "TR" (Semi-transparent) or "Conformalight"
C. 3M Series 3840

Barrels and Drums

A. Avery Dennison WR-6100
B. Nippon Carbide, Flexible Ultralite Grade (ULG) II
C. Reflexite, "Conformalight", "Super High Intensity" or "High Impact Drum Sheeting"
D. 3M Series 3810

Barricades: Type I, Medium-Intensity (Typically Enclosed Lens, Glass-Bead Element)

A. American Decal, Adcolite
B. Avery Dennison, T-1500 and T-1600 series
C. 3M Engineer Grade, Series 3170

Barricades: Type II, Medium-High-Intensity (Typically Enclosed Lens, Glass-Bead Element)

A. Avery Dennison, T-2500 Series
B. Kiwalite Type II
C. Nikkalite 1800 Series

Signs: Type II, Medium-High-Intensity (Typically Enclosed Lens, Glass-Bead Element)

A. Avery Dennison, T-2500 Series
B. Kiwalite, Type II
C. Nikkalite 1800 Series

Signs: Type III, High-Intensity (Typically Encapsulated Glass-Bead Element)

A. Avery Dennison, T-5500 and T-5500A Series
B. Nippon Carbide, Nikkalite Brand Ultralite Grade II
C. 3M Series 3870

Signs: Type IV, High-Intensity (Typically Unmetallized Microprismatic Element)
A. Avery Dennison, T-6500 Series (Formerly Stimsonite Series 6200)
B. Nippon Carbide, Crystal Grade, 94000 Series

Signs: Type VI, Elastomeric (Roll-Up) High-Intensity, without Adhesive
A. Avery Dennison, WU-6014
B. Novabrite LLC, "Econobrite"
C. Reflexite "Vinyl"
D. Reflexite "SuperBright"
E. Reflexite "Marathon"
F. 3M Series RS34 (Orange) and RS20 (Fluorescent orange)

Signs: Type VII, Super-High-Intensity (Typically Unmetallized Microprismatic Element)
A. 3M LDP Series 3924 (Fluorescent Red/Orange)
B. 3M LDP Series 3970

Signs: Type VIII, Super-High-Intensity (Typically Unmetallized Microprismatic Element)
A. Avery Dennison, T-7500 Series

Signs: Type IX, Very-High-Intensity (Typically Unmetallized Microprismatic Element)
A. 3M VIP Series 3981 Diamond Grade (Fluorescent yellow)
B. 3M VIP Series 3983 Diamond Grade (Fluorescent yellow/Green)
C. 3M VIP Series 3990 Diamond

SPECIALTY SIGNS
A. All Sign Products, STOP Sign (All Plastic), 750 mm {30 inches}
B. Relexite "Endurance" Work Zone Sign (with Semi-Rigid Plastic Substrate)

<u>SIGN SUBSTRATE</u>

Fiberglass Reinforced Plastic (FRP)
A. Fiber-Brite
B. Sequentia, "Polyplate"
C. Inteplast Group "InteCel" (13 mm {0.5-inch} for Post-Mounted CZ Signs, 1200 mm {48 inches}or less)

Aluminum Composite
A. Alcan Composites "Dibond Material, 2 mm {0.08-inch}" (for temporary construction signs only)
B. Mitsubishi Chemical America, Alpolic 350 (for temporary construction signs only)

SECTION 9. DESCRIPTION OF WORK

This project includes pedestrian improvements at Branch Street, Price Street and Thompson Avenue, Old Towne Nipomo. Two pedestrian bridges, a pedestrian bike path, new curb gutter and sidewalks, retaining wall, ADA accessible ramps, and a storm drain system are proposed. The work shall include roadway excavation, removal of existing ac pavement, embankment grading, trench excavation, bridge abutment and footing construction, and paving. Pavement striping, signage, railings and other permanent traffic control devices shall be installed. Aggregate base and asphalt concrete pavement shall be placed and such other items or detail work not mentioned herein that are required by the plans, the Standard Specifications, Standard Plans, or these Special Provisions shall be performed, constructed, furnished and/or installed.

SECTION 10. CONSTRUCTION DETAILS

10-1.01 Order of Work: Order of work shall conform to the provisions in Section 5-1.05, "Order of Work" of the Standard Specifications and these Special Provisions.

The work shall conform to the inherent stages of construction described in the Contractor's Progress Schedule as approved by the Engineer. Work may proceed that is not in conflict with work in preceding stages, provided satisfactory progress is maintained in said preceding stages of construction.

Construction area signs shall be placed prior to work occurring.

Lane closures of one-way traffic control will not be permitted on Thompson Avenue between the hours of 07:00 and 08:30 and between 14:30 and 18:00 on any weekday.

The contractor's attention is directed to the lead time required for preparation and review of shop drawings, review of submittals, ordering of materials, and instruction for the pedestrian bridges, abutments, wing walls and railings. The contractor's schedule shall reflect these lead times and the contractor shall be soley responsible to ensure that the work at the bridge sites is completed prior to the rainy season, October 31st and in all matters in compliance with the environmental permits.

The temporary fence (TYPE ESA) shall be the first order of work.

Sidewalk improvements on Beechnut Avenue and Price Street, nearest to Nipomo Elementary School, shall be constructed first.

The placement of permanent hot mix asphalt shall follow the operation of cold planing asphalt concrete pavement completed at any individual location within five (5) working days.

Composite decking for bridges shall be used if concrete decking cannot be placed prior to the rainy season, October 31st. This date may be extended depending on weather conditions and permission from California Department of Fish and Game.

Full compensation for conforming to these requirements shall be considered as included in the prices paid for the various items of work and no additional compensation will be allowed therefor.

10-1.02 Encountering Cultural Resources: In the event archaeological resources are unearthed or discovered during any construction activities, the following standards apply:

A. Construction activities shall cease, and the Environmental Coordinator, Planning Department and Caltrans District 5 Local Assistance shall be notified so that the extent and location of discovered materials may be recorded by a qualified archaeologist, and disposition of artifacts may be accomplished in accordance with state and federal law.

B. In the event archaeological resources are found to include human remains, or in any other case where human remains are discovered during construction, the County Coroner is to be notified in addition to the Planning Department and Environmental Coordinator so that proper disposition may be accomplished

10-1.03 Trench Safety: Attention is directed to Section 7-1.01E, "Trench Safety" of the Standard Specifications, Article 15 of the Contract Agreement, and these Special Provisions.

Excavation safety shall conform to the provisions in Section 5-1.02A, "Excavation Safety Plans" of the Standard Specifications. All excavations shall be performed, protected and supported as required for safety and in the manner set forth in the operation rules, orders and regulations prescribed by the Division of Occupational Safety and Health of the State of California and any other applicable safety regulations.

Barriers shall be placed at each end of all excavations and at such places along excavations to warn all pedestrian and vehicular traffic of such excavations. Lighted barricades shall also be placed along excavations from sunset each day to sunrise of the next day until such excavations are entirely refilled.

Nothing herein shall be deemed to allow the use of shoring, sloping or protective system less effective than that required by the Construction Safety Orders of the Division of Occupational Safety and Health.

Additionally, all work performed under this contract shall conform to the requirements of either the State of California Construction Safety Orders or the Federal Safety Codes, whichever is more stringent.

Contractor shall submit a detailed plan in advance of any trench excavation work as part of this contract showing the design of shoring, bracing, sloping or other provisions for worker protection from the potential hazard of caving ground resulting from excavation of any trench or trenches over five (5) feet in depth. The detailed plan must be prepared by a registered civil engineer or structural engineer if the design varies from the shoring system standards required by the Construction Safety Orders.

Full compensation for conforming to the requirements of this section shall be considered as included in the contract items of work involved and no separate payment will be made therefor.

10-1.04 Water Pollution Control:

GENERAL

Water pollution control work shall conform to the provisions in Section 7-1.01G, "Water Pollution," of the Standard Specifications and these Special Provisions.

The Contractor shall perform water pollution control work in conformance with the requirements in the "Storm Water Pollution Prevention Plan (SWPPP) and Water Pollution Control Program (WPCP) Preparation Manual" and its addenda in effect on the day the Notice to Proceed is dated. This manual is referred to as the "Preparation Manual." Copies of the Preparation Manual may be obtained from:

State of California
Department of Transportation
Publication Distribution Unit
1900 Royal Oaks Drive
Sacramento, California 95815
Telephone: (916) 445-3520

The Preparation Manual and other references for performing water pollution control work are available from Caltrans' Construction Storm Water and Water Pollution Control web site at:

http://www.dot.ca.gov/hq/construc/stormwater/stormwater1.htm

Before the start of job site activities, the Contractor shall provide training for project managers, supervisory personnel, and employees involved with water pollution control work. The training shall include:

A. Rules and regulations
B. Implementation and maintenance for:
   1. Temporary Soil Stabilization
   2. Temporary Sediment Control
   3. Tracking Control
   4. Wind Erosion Control

The Contractor shall designate in writing a Water Pollution Control Manager (WPCM). The Contractor shall submit a statement of qualifications describing the training, work history, and expertise of the proposed WPCM. The qualifications shall include either:

A. A minimum of 24 hours of Caltrans approved storm water management training described at Caltrans' Construction Storm Water and Water Pollution Control web site.
B. Certification as a Certified Professional in Erosion and Sediment Control (CPESC).

The WPCM shall be:

A. Responsible for water pollution control work.
B. The primary contact for water pollution control work.
C. Have authority to mobilize crews to make immediate repairs to water pollution control practices.

The Contractor may designate one manager to prepare the Water Pollution Control Program (WPCP) and a different manager to implement the plan. The WPCP preparer shall meet the training requirements for the WPCM.

WATER POLLUTION CONTROL PROGRAM
The WPCP shall conform to the requirements in the Preparation Manual and these Special Provisions.

The WPCP shall include water pollution control practices:

A. For storm water and non-storm water from areas outside of the job site related to construction activities for this contract such as:
   1. Staging areas.
   2. Storage yards.
   3. Access roads.
B. Appropriate for each season as described in "Implementation Requirements" of these Special Provisions.

The WPCP shall include a schedule that:

A. Describes when work activities that could cause water pollution will be performed.
B. Identifies soil stabilization and sediment control practices for disturbed soil area.
C. Includes dates when these practices will be 25, 50, and 100 percent complete.
D. Shows 100 percent completion of these practices before the rainy season.

The WPCP shall include the following temporary water pollution control practices and their associated contract items of work as shown on the plans or specified in these Special Provisions:

A. Temporary Soil Stabilization
   1. Clearing and Grubbing
   2. Roadway Excavation
   3. Embankment

B. Temporary Sediment Control
   1. Clearing and Grubbing
   2. Roadway Excavation
   3. Embankment

C. Tracking Control
   1. Clearing and Grubbing
   2. Roadway Excavation
   3. Embankment

D. Wind Erosion Control
   1. Clearing and Grubbing
   2. Roadway Excavation
   3. Embankment
   4. Aggregate Base

E. Non-Storm Water Management
   1. Minor Concrete
   2. Class 2 Concrete

F. Waste Management and Materials Pollution Control
   1. Minor Concrete
   2. Structural Steel (Bridge)
   3. Paint

If there is a change in construction schedule or activities, the Contractor shall prepare an amendment to the WPCP to identify additional or revised water pollution control practices. The Contractor shall submit the amendment to the Engineer for review within 5 days. The Engineer will review the amendment within the same time allotted for the review of the initial submittal of the WPCP.

The Contractor shall keep a copy of the approved WPCP at the job site. The WPCP shall be made available when requested by a representative of the Regional Water Quality Control Board, State Water Resources Control Board, United States Environmental Protection Agency, or the local storm water management agency. Requests from the public shall be directed to the Engineer.

When the County has issued the Notice of Completion the Contractor shall to submit the working copy of the WPCP, including inspection records, to the Engineer

IMPLEMENTATION REQUIREMENTS

The Contractor's responsibility for WPCP implementation shall continue throughout any temporary suspension of work ordered in conformance with the provisions in Section 8-1.05, "Temporary Suspension of Work," of the Standard Specifications.

If the Contractor or the Engineer identifies a deficiency in the implementation of the approved WPCP, the deficiency shall be corrected immediately, unless an agreed date for correction is approved in writing by the Engineer. The deficiency shall be corrected before the onset of precipitation. If the Contractor fails to correct the deficiency by the agreed date or before the onset of precipitation, the County may correct the deficiency and deduct the cost of correcting deficiencies from payments.

The Contractor shall monitor the weather forecast using the National Weather Service Forecast Office (http://www.srh.noaa.gov/) on a daily basis during the contract. Appropriate water pollution control practices shall be in place before precipitation.

The Contractor may discontinue earthwork operations for a disturbed area for up to 21 days and the disturbed soil area will still be considered active. When earthwork operations in the disturbed area have been completed, the Contractor shall implement appropriate water pollution control practices within 15 days or before predicted precipitation, whichever occurs first.

Soil stabilization and sediment control practices conforming to these Special Provisions shall be in place during the rainy season between October 15 and April 15.

The Contractor shall implement soil stabilization and sediment control practices a minimum of 10 days before the start of the rainy season.

INSPECTION AND MAINTENANCE
The WPCM shall inspect the water pollution control practices identified in the WPCP as follows:

A. Before a forecasted storm,
B. After precipitation that causes site runoff,
C. At 24-hour intervals during extended precipitation,
D. On a predetermined schedule, a minimum of once every 2 weeks outside of the defined rainy season, and
E. On a predetermined schedule, a minimum of once a week during the defined rainy season.

The WPCM shall oversee the maintenance of the water pollution control practices.

The WPCM shall use the Storm Water Quality Construction Site Inspection Checklist provided in the Preparation Manual or an alternative inspection checklist provided by the Engineer. A copy of the completed site inspection checklist shall be submitted to the Engineer within 24 hours of finishing the inspection.

REPORTING REQUIREMENTS
If the Contractor identifies discharges into surface waters or drainage systems causing or potentially causing pollution or if the project receives a written notice or order from a regulatory agency, the Contractor shall immediately inform the Engineer. The Contractor shall submit a written report to the Engineer within 7 days of the discharge, notice, or order. The report shall include the following information:

A. The date, time, location, and nature of the operation, type of discharge and quantity, and the cause of the notice or order.
B. The water pollution control practices used before the discharge, or before receiving the notice or order.
C. The date of placement and type of additional or altered water pollution control practices placed after the discharge or after receiving the notice or order.
D. A maintenance schedule for affected water pollution control practices.

PAYMENT
The contract lump sum price paid for "WATER POLLUTION CONTROL" shall include full compensation for furnishing all labor, materials, tools, equipment, and incidentals and for doing all the work involved in preparing, obtaining approval of, and amending the WPCP; reporting discharges; and the installation, inspection, maintenance, repair, and removal of water pollution control practices, as shown on the plans, as specified in the Standard Specifications and these Special Provisions, and as directed by the Engineer.

Payments for "WATER POLLUTION CONTROL" will be made as follows:

A. After the WPCP has been approved by the Engineer, 10 percent of the contract item price for "WATER POLLUTION CONTROL" will be included in the monthly progress estimate.
B. Eighty percent of the contract item price for "WATER POLLUTION CONTROL" will be paid over the life of the contract.
C. After acceptance of the contract in conformance with the provisions in

Section 7-1.17, "Acceptance of Contract," of the Standard Specifications, payment for the remaining 10 percent of the contract item price for "WATER POLLUTION CONTROL" will be made in conformance with the provisions in Section 9-1.08B, "Payment Before Final Estimate."

During each estimate period the Contractor fails to conform to the provisions in this section, "Water Pollution Control," or fails to implement the water pollution control practices shown on the plans or specified elsewhere in these Special Provisions as items of work, the County will withhold 25 percent of the progress payment.

Withholds for failure to perform water pollution control work will be in addition to all other withholds provided for in the contract. The County will return performance-failure withholds in the progress payment following the correction for noncompliance.

Implementation of water pollution control practices in areas outside the County right of way not specifically provided for in the WPCP or in these Special Provisions will not be paid for.

Water pollution control practices for which there are separate contract items of work will be measured and paid for as those contract items of work.

10-1.05 Cooperation: Attention is directed to Section 7-14, "Cooperation," of the Standard Specifications and these Special Provisions.

Work which is not project related that may be occurring by others within or adjacent to the project limits, shall not be interrupted by the Contractor to the fullest extent possible.

The Nipomo Community Senior Center, located at Beechnut and Price Street, anticipates constructing Parking Lot improvements during this contract.

10-1.06 Obstructions: Attention is directed to Sections 8-1.10, "Utility and Non-Highway Facilities," and Section 15, "Existing Highway Facilities," of the Standard Specifications and these Special Provisions.

It shall be the responsibility of the Contractor to work with the local utility companies to locate all underground utility facilities within the construction area prior to any excavation work. This requires that the Contractor notify by telephone "Underground Service Alert" at least two business days, put not more than 14 days, prior to commencing any excavation (including erecting stationary mounted construction area signs).
Notification Center: Underground Service Alert – USA North Telephone Number:1-800-227-2600.

The Contractor shall obtain and provide the "Inquire Identification Number" to the Engineer before excavation commences.

It shall be the responsibility of the Contractor to coordinate operations at locations requiring the rearrangement of existing utility facilities by others, whether such facilities are rearranged before, during, or after construction is completed.

The Contractor shall coordinate work activities with the related utility work necessary during construction of the project which must occur during the progress of the Contractor's work. The contract time specified in Section 4, "PROSECUTION AND PROGRESS OF WORK" of the contract Special Provisions includes an allowance of five (5) non-consecutive working days for the utility companies to perform their respective work. During this time, the Contractor may only work on those portions of the project that do not interfere with the utility companies' work.

Utility Relocation and Date of the Relocation			
Utiliy	Contact	Location	Date
Nipomo CSD	Peter Sevcik, (805) 929-1133	Price St/Thompson Ave	Jun-2010
Gas	Claudia Turner, (805) 681-8024	Price St/Thompson Ave	Jun-2010

Utility Relocation and Department-Arranged Time for the Relocation			
Utility	Contact	Location	Days
Charter	Bruce Jensen, (805) 783-4950	Price St/Thompson Ave	5

Compensation for delay to permit rearrangement of utilities shall be considered as included in the contract items of work involved and the Contractor will not be entitled to any compensation for such delay, nor entitled to an extension of time for such delay, without due cause.

The Contractor shall notify the Engineer in writing at least five (5) working days prior to the date upon which the utility companies may begin their rearrangement work. In the event that the work area is not satisfactorily prepared, as determined by the Engineer, the Contractor shall supply the Engineer with another five (5) working days notice, in writing, upon which the utility companies may begin their rearrangement work.

The Contractor is responsible for maintaining the roadway for traffic at all times. During utility rearrangement work, the Contractor shall avoid activities that could conflict with the utility work and shall coordinate activities that could facilitate utility work.

Emergency Contacts:

Nipomo Community Services District – Peter Sevick	929-1133
Southern California Gas Company – Claudia Turner	681-8024
AT&T/SBC – Neil Zacharia	546-7012
PG&E - Michael Orban	346-2225
Charter Communication – Bruce Jensen	783-4950
Department of Water Resources/	
Central Coast Water Authority – Tom Petersen	441-6811
John Brady	688-2292

10-1.07 Material Deposited at Job Site: The Contractor shall provide load slips to the Engineer at the point of delivery for all materials deposited at the job site for payment purposes.

10-1.08 Final Pay Quantities: Section 9-1.015, "Final Pay Quantities," of the Standard Specifications is hereby amended as follows:

"When an item of work is designated as (F) on the Bid Proposal Form, the estimated quantity for that item of work shall be the final pay quantity, unless the dimensions of any portion of that item are revised by the Engineer, or the item or any portion of the item is eliminated. If the dimensions of any portion of the item are revised, and the revisions result in an increase or decrease in the estimated quantity of that item of work, the final pay quantity for the item will be revised in the amount represented by the changes in the dimensions, except as otherwise provided for minor structures in Section 51-1.22, "Measurement." If a final pay item is eliminated, the estimated quantity for the item will be eliminated. If a portion of a final pay item is eliminated, the final pay quantity will be revised in the amount represented by the eliminated portion of the item of work.

The estimated quantity for each item of work designated as (F) on the Bid Proposal Form shall be considered as approximate only, and no guarantee is made that the quantity which can be determined by computations, based on the details and dimensions shown on the plans, will equal the estimated quantity. No allowance will be made in the event that the quantity based on computations does not equal the estimated quantity.

In case of discrepancy between the quantity shown on the Bid Proposal Form for a final pay item and the quantity or summation of quantities for the same item shown on the plans, payment will be based on the quantity shown on the Bid Proposal Form.

10-1.09 Maintaining Traffic: Attention is directed to the provisions of Section 7-1.08, "Public Convenience," Section 7-1.09, "Public Safety," and Section 12, "Construction Area Traffic Control Devices," of the Standard Specifications and these Special Provisions.

Closures shall conform to the provisions in "Traffic Control System for Lane Closures" of these Special Provisions.

Work on Price Street and on Thompson Avenue shall be restricted between the hours of 7:30 and 8:30 and between 14:00 and 15:00 on any weekday.
School drop off and pickup shall not be interrupted.

During the times when men or equipment are actually working, a minimum of one 12-foot wide lane with flagging shall be provided for public traffic. At all other times, a minimum of two 10-foot wide lanes which are reasonably smooth and satisfactory for public two-way traffic shall be provided and maintained by the Contractor irrespective of the state of construction. Adequate sight distance for vehicles exiting driveways shall be maintained.

The Contractor shall conduct operations in such a manner that access of abutting residences and businesses along the road is not obstructed. Care shall be taken by the Contractor so that materials or equipment placed or parked within the County road right of way will not block access to any residence or business. It is the Contractor's responsibility to notify and make arrangements with business owners to minimize impacts to traffic and pedestrians accessing these locations.

To accommodate excavation work, steel plate bridging may be necessary. Excavated areas within the roadway shall be covered with steel plate bridging or shall be backfilled and temporarily patched at the end of each work day and prior to opening for traffic.

Temporary Pavement Patching

The temporary patching shall be kept in a smooth, firm, dust-free condition for the safe use of the public until the final surface patching is completed. Patch material shall be cold mix asphalt at least 3-inches thick.

Steel Plate Bridging

When backfilling operations of an excavation in the traveled way, whether transverse or longitudinal, cannot be properly completed within a work day, steel plate bridging with a non-skid surface and shoring (see Trenching & Shoring) shall be required to preserve unobstructed traffic flow. In such cases, the following conditions shall apply:

a. Steel plates used for bridging must extend a minimum of 12" beyond the edges of the trench.
b. Steel plate bridging shall be installed to operate with minimum noise.
c. The trench shall be adequately shored to support the bridging and traffic loads.
d. Temporary paving with cold asphalt concrete shall be used to feather the edges of the plates.
e. Bridging shall be secured against displacement by using adjustable cleats, shims, or other devices.
f. Approach plate(s) and ending plate (if longitudinal placement) shall be attached to the roadway by a minimum of 2 dowels pre-drilled into the corners of the plate and drilled 2" into the pavement. Subsequent plates are butted to each other. Fine graded asphalt concrete shall be compacted to form ramps, maximum slope 8.5 % with a minimum 12" taper to cover all edges of the steel plates. When steel plates are removed, the dowel holes in the pavement shall be backfilled with either graded fines of asphalt concrete mix, concrete slurry or equivalent slurry that is satisfactory to the Engineer.
g. The Contractor shall maintain the steel plates, shoring, asphalt concrete ramps, and ensure that they meet minimum specifications.
h. Unless specifically noted in the Special Provisions, or approved by the Engineer, use of steel plate bridging shall not exceed 4 consecutive working days in any given week.

The following table shows the required minimal thickness of steel plate bridging required for a given trench width (A-36 grade steel, designed for HS20-44 truck loading per Caltrans Bridge Design Specifications Manual.).

Trench Width	Minimum Steel Plate Thickness (inches)
10"	½
1'-11"	¾
2'-7"	7/8
3'-5"	1
5'-3"	1-1/4

Note: For spans greater than 5'-3", a structural design by a registered civil engineer shall be prepared and submitted to the Engineer for review and approval.

All steel plates within the right of way whether used in or out of the traveled way shall be without deformation. Inspectors can determine the trueness of steel plates by using a straight edge and should reject any plate that is permanently deformed.

All steel plates used in the traveled portion of the highway shall have a surface that was manufactured with a nominal Coefficient of friction (COF) of 0.35 as determined by California Test Method 342.

A Rough Road sign (W8-8) with black lettering on an orange background shall be used in advance of steel plate bridging. This sign is used along with any other required construction signing

The Contractor, pursuant to Section 22651-M of the California Vehicle Code, shall be responsible for notifying and making arrangements with owners of vehicles required to be removed from the area.

Full compensation for conforming to the requirements of this section shall be considered as included in other items of work and no additional compensation will be allowed therefor.

10-1.10 Construction Area Signs: Attention is directed to the provisions in Section 12, "Construction Area Traffic Control Devices," of the Standard Specifications and these Special Provisions.

The Contractor shall furnish all sign panels, posts and hardware. The Contractor shall also erect and maintain all construction area signs shown on the plans as provided in these Special Provisions.

Construction area signs shall not be used until they are needed and when no longer needed, they shall be removed from the site of the work by the Contractor.

Attention is directed to the provisions in Section 8-1.01, "Prequalified and Tested Signing and Delineation Materials" of these Special Provisions. Type II retroreflective sheeting shall not be used on construction area sign panels. Type III, IV, VII, VIII, or IX retroreflective sheeting shall be used for stationary mounted construction area sign panels.

The base material of construction area signs shall not be plywood. Used sign panels, in good repair as determined by the Engineer, may be furnished. If determined by the Engineer, signs damaged by any cause shall be replaced by the Contractor at the Contractor's own expense. Repair to construction area sign panels will not be allowed, except when approved by the Engineer. At nighttime under vehicular headlight illumination, sign panels that exhibit irregular luminance, shadowing, or dark blotches shall be immediately replaced at the Contractor's expense.

The Contractor shall notify the appropriate regional notification center (USA North, 1-800-227-2600) for operators of subsurface installations at least 2 business days, but not more than 14 days, prior to commencing excavation for construction area sign posts.

Excavations required to install construction area signs shall be performed by hand methods without the use of power equipment, except that power equipment may be used if it is determined there are no utility facilities in the area of the proposed post holes. The post hole diameter, if backfilled with portland cement concrete, shall be at least 4 inches greater than the longer dimension of the post cross section.

The Contractor shall maintain accurate information on construction area signs. Signs that are no longer required shall be immediately covered or removed. Signs that convey inaccurate information shall be immediately replaced or the information shall be corrected. Covers shall be replaced when they no longer cover the signs properly. The Contractor shall immediately restore to the original position and location any sign that is displaced or overturned, from any cause, during the progress of work.

Streets and roads shall be posted by the Contractor with temporary "No Parking" signs on Type II Barricades. Temporary "No Parking" signs shall be 12" x 18", and shall display the message "TEMPORARY NO PARKING TOW AWAY" in 2" red letters. Signs shall be posted with the appropriate dates listed, a minimum of 48 hours in advance of doing the work. In the event that a change in sign posting is required due to a change in the Contractor's work schedule, the Contractor shall repost the locations affected at the Contractor's own expense.

When the Contractor's operations result in a drop off at the edge of pavement of 0.15' or more, the Contractor shall place and maintain portable delineators, w8-9 (Low Shoulder) signs, and R4-1 (Do Not Pass) signs prior to opening the lane to uncontrolled traffic. Portable delineators shall be placed at maximum intervals of 200 feet on tangents and 50 feet on curves. Warning signs shall be mounted on Type II barricades off of and adjacent to the traveled way at maximum intervals of 2000 feet.

Portable delineators, traffic cones, barricades, telescoping flag tree with flags, signs, and all traffic control devices specified in these Special Provisions shall conform to the requirements of Section 12, "Construction Area Traffic Control Devices," of the Standard Specifications.

Signs damaged by any cause shall be repaired, or, if determined by the Engineer to be irreparable, replaced by the Contractor at his expense.

"CONSTRUCTION AREA SIGNS" will be paid for on a lump sum basis in the manner specified in Section 12-4.01 of the Standard Specifications.

10-1.11 Traffic Control System for Lane Closures: A traffic control system shall consist of closing traffic lanes in conformance with the details shown on the plans, the provisions in Section 12, "Construction Area Traffic Control Devices," of the Standard Specifications, the provisions under "Maintaining Traffic" and "Construction Area Signs" of these Special Provisions, and these Special Provisions.

The provisions in this section will not relieve the Contractor from the responsibility to provide additional devices or take measures as may be necessary to comply with the provisions in Section 7-1.09, "Public Safety," of the Standard Specifications.

If components in the traffic control system are displaced or cease to operate or function as specified, from any cause, during the progress of the work, the Contractor shall immediately repair the components to the original condition or replace the components and shall restore the components to the original location.

When lane closures are made for work periods only, at the end of each work period, components of the traffic control system, except portable delineators placed along open trenches or excavation adjacent to the traveled way shall be removed from the traveled way and shoulder. If the Contractor so elects, the components may be stored at selected central locations designated by the Engineer within the limits of the highway right of way.

One-way traffic shall be controlled through the project in conformance with the plan entitled "Traffic Control System for Lane Closure on Two Lane Conventional Highways" and these Special Provisions.

Lane closures shall be made in accordance with the Lane closures restrictions list, Appendix K of the San Luis Obispo County, Department of Public Works, Public Improvement Standards.

The contract lump sum price paid for "TRAFFIC CONTROL SYSTEM" shall include full compensation for furnishing all labor (except for flagging costs), materials (including signs), tools, equipment, and incidentals, and for doing all the work involved in placing, removing, storing, maintaining, moving to new locations, replacing, and disposing of the components of the traffic control system and for furnishing and operating the pilot car, (including driver, radios, other equipment, and labor required), as shown on the plans, as specified in the Standard Specifications and these Special Provisions, and as directed by the Engineer, and no additional compensation will be allowed therefor. Flagging costs will be paid for as provided in Section 12-2.02, "Flagging Costs," of the Standard Specifications.

The adjustment provisions in Section 4-1.03, "Changes," of the Standard Specifications shall not apply to the item of traffic control system. Adjustments in compensation for traffic control system will be made only for increased or decreased traffic control system required by changes ordered by the Engineer and will be made

on the basis of the cost of the increased or decreased traffic control necessary. The adjustment will be made on a force account basis as provided in Section 9-1.03, "Force Account Payment," of the Standard Specifications for increased work and estimated on the same basis in the case of decreased work.

Traffic control system required by work which is classed as extra work, as provided in Section 4-1.03D of the Standard Specifications, will be paid for as a part of the extra work.

10-1.12 Temporary Pavement Delineation: Temporary pavement delineation shall be furnished, placed, maintained, and removed in conformance with the provisions in Section 12-3.01, "General," of the Standard Specifications and these Special Provisions. Nothing in these Special Provisions shall be construed as reducing the minimum standards specified in the California MUTCD or as relieving the Contractor from the responsibilities specified in Section 7-1.09, "Public Safety," of the Standard Specifications.

When the work causes obliteration of pavement delineation, temporary or permanent pavement delineation shall be in place before opening the traveled way to public traffic. Laneline or centerline pavement delineation shall be provided for traveled ways open to public traffic.

Work necessary, including required lines or markers, to establish the alignment of temporary pavement delineation shall be performed by the Contractor. Surfaces to receive application of paint or removable traffic tape temporary pavement delineation shall be dry and free of dirt and loose material. Temporary pavement delineation shall not be applied over existing pavement delineation or other temporary pavement delineation. Temporary pavement delineation shall be maintained until superseded or replaced with a new pattern of temporary pavement delineation or permanent pavement delineation, or as determined by the Engineer.

Temporary pavement markers and removable traffic tape that conflicts with a new traffic pattern or that is applied to the final layer of surfacing or existing pavement to remain in place shall be removed when no longer required for the direction of public traffic, as determined by the Engineer.

Temporary pavement delineation shall be used on or adjacent to lanes open to public traffic for a maximum of 14 days. Before the end of the 14 days, the permanent pavement delineation will be placed.

Painted traffic stripe used for temporary delineation shall conform to Section 84-3, "Painted Traffic Stripes and Pavement Markings," of the Standard Specifications, except for payment.

Full compensation for furnishing, placing and maintaining temporary pavement delineation and for removing and disposing of temporary raised pavement markers, when no longer required, shall be considered as included in the contract prices paid for the asphalt overlay work and no additional compensation will be allowed therefor.

10-1.13 Temporary Laneline and Centerline Delineation: When lanelines or centerlines are obliterated, the minimum laneline and centerline delineation to be provided shall be temporary pavement markers placed at longitudinal intervals of not more than 24 feet. The temporary pavement markers shall be the same color as the laneline or centerline the markers replace. Temporary pavement markers shall be, at the option of the Contractor, one of the temporary pavement markers listed for short term day/night use (14 days or less) or long term day/night use (6 months or less) in "Prequalified and Tested Signing and Delineation Materials" of these Special Provisions. Temporary pavement markers shall be placed in conformance with the manufacturer's instructions and shall be cemented to the surfacing with the adhesive recommended by the manufacturer, except epoxy adhesive shall not be used to place pavement markers in areas where removal of the markers will be required.

Temporary laneline or centerline delineation consisting entirely of temporary pavement markers shall be placed on longitudinal intervals of not more than 24 feet.

Where removal of white 4-inch wide laneline traffic stripe will not be required, painted traffic stripe and clear retroreflective pavement markers shall be used for temporary laneline delineation. Temporary painted laneline delineation placed on portland cement concrete pavement shall consist of white traffic stripe supplemented by black contrast traffic stripe and clear retroreflective pavement markers, as shown on the plans. Temporary painted laneline and clear retroreflective pavement markers shall be placed on longitudinal intervals of not more than 48 feet. When the permanent pavement delineation is placed the black contrast stripe and clear retroreflective pavement markers may remain in place. The quantity of painted traffic stripe used for temporary laneline delineation will not be included in the quantities of paint traffic stripe to be paid for.

Where "no passing" centerline pavement delineation is obliterated, the following "no passing" zone signing shall be installed before opening the lanes to public traffic. W20-1 (ROAD WORK AHEAD) signs shall be installed from 1,000 feet to 2,000 feet in advance of "no passing" zones. R4-1 (DO NOT PASS) signs shall be installed at the beginning and at every 2,000-foot interval within "no passing" zones. For continuous zones longer than 2 miles, W7-3a or W71(CA) (NEXT _____ MILES) signs shall be installed beneath the W20-1 signs installed in advance of "no passing" zones. R4-2 (PASS WITH CARE) signs shall be installed at the end of "no passing" zones. The exact location of "no passing" zone signing will be as determined by the Engineer and shall be maintained in place until permanent "no passing" centerline pavement delineation has been applied. The signing for "no passing" zones shall be removed when no longer required for the direction of public traffic. The signing for "no passing" zones shall conform to the provisions in "Construction Area Signs" of these Special Provisions, except for payment.

Full compensation for furnishing, placing, maintaining, and removing temporary pavement markers used for temporary laneline and centerline delineation and for providing equivalent patterns of permanent traffic lines for these areas when required shall be considered as included in the contract prices paid for the items of work that obliterated the laneline and centerline pavement delineation and no separate payment will be made therefor.

Full compensation for furnishing, placing, maintaining, and removing signing specified for "no passing" zones shall be considered as included in the contract prices paid for the items of work that obliterated the laneline and centerline pavement delineation and no separate payment will be made therefor.

10-1.14 Existing Highway Facilities: The work performed in connection with various existing highway facilities shall conform to the provisions in Section 15, "Existing Highway Facilities," of the Standard Specifications.

Any existing highway facility, other than that which is specified hereafter, that requires resetting, rearranging, or adjusting to the lines and grades of the plans shall be reset, rearranged, or adjusted accordingly by the Contractor and full compensation for such shall be considered as included in the various items of work involved and no additional compensation shall be allowed therefor except for materials deemed unsuitable for reuse by the Engineer which shall be replaced in kind and paid for as extra work, as provided in Section 4-1.03D, "Extra Work," of the Standard Specifications.

10-1.15 Remove Traffic Stripes and Pavement Markings: Existing traffic stripes and pavement markings shall be removed, in accordance with Section 15, "Existing Highway Facilities," before any change is made in the traffic pattern for each phase of construction.

This work includes removing existing traffic stripe and pavement marking at the locations shown on the plans.

Waste residue from removal of thermoplastic and painted traffic stripe and pavement marking is a non–hazardous waste residue and contains lead in average concentrations less than 1000 mg/kg total lead and 5 mg/L soluble lead. This waste residue does not contain heavy metals in concentrations that exceed thresholds established by the Health and Safety Code and 22 CA Code of Regs and is not regulated under the Federal Resource Conservation and Recovery Act (RCRA), 42 USC § 6901 et seq.

Removal of temporary traffic stripes and temporary pavement markings shall be included in the cost for "REMOVE TRAFFIC STRIPE AND PAVEMENT MARKING".

The contract lump sum price paid for "REMOVE TRAFFIC STRIPE AND PAVEMENT MARKING" shall include full compensation for furnishing all labor, materials, tools, equipment and incidentals, and for doing all the work involved in removing, cleaning residue, and disposing of removed material for each phase of construction, as shown on the plans, as specified in the Standard Specifications and these Special Provisions, and as directed by the Engineer.

10-1.16 Remove Asphalt and Concrete Surfacing: The existing roadway surfacing (asphalt or concrete) to be removed as shown on the plans shall be saw cut along the edges, broken up and removed. Prior to removing any asphalt concrete, the outside edge of the asphalt concrete to remain in place shall be saw cut to a neat line. The cut shall be a minimum depth of 0.2-feet. The asphalt concrete surfacing shall be removed in such a manner so that the surfacing which is to remain in place is not damaged.

There is approximately 18" or thicker of concrete roadway material beneath the existing asphalt surface in Thompson Avenue. Removal of this concrete shall be included in the cost paid for "REMOVE ASPHALT CONCRETE SURFACING".

Material removed as described in this section shall be considered excess and shall be disposed of in accordance with the provisions of Section 7-1.13, "Disposal of Material Outside the Highway Right of Way" of the Standard Specifications.

The contract price paid per square yard for "REMOVE ASPHALT AND CONCRETE SURFACING.", shall include full compensation for furnishing all labor, materials, tools, equipment, and incidentals and for doing all work involved in saw cutting, removing and disposing of asphalt and concrete roadway surface, concrete spandrel, driveway concrete, including, removing and disposing of 18" thick or thicker concrete roadway material, as shown on the plans, as specified in the Standard Specifications and these Special Provisions, as directed by the Engineer.

10-1.17 Reset Roadside Signs: Existing roadside signs that are scheduled to be reset, including signs listed as "Remove & Salvage" on the project plans, shall be relocated (or completely removed as the case may be) by the Contractor and temporarily mounted on type III barricades. The mounted signs shall be temporarily placed along the roadway during construction near their original locations and as approved by the Engineer.

The Contractor shall be responsible for the daily maintenance of the temporarily mounted signs and barricades during construction. Signs that are damaged or unusable, as determined by the Engineer, shall be replaced by the Contractor, at the Contractor's own expense during their use as temporary roadside signs.

The signs shall be salvaged for reuse and set on new posts at the locations shown on the plans. If it is determined by the Engineer that the salvaged sign cannot be reused, new signs will be furnished by the County. This determination will be made just prior to final relocation to the permanent sign location shown of the plans.

The contract unit price paid for "RESET ROADSIDE SIGNS", shall include full compensation for furnishing all labor, materials, tools, equipment, and incidentals and for doing all the work involved in relocating roadside signs, complete in place, as shown on plans, as specified in the Standard Specifications and in accordance with these Special Provisions.

10-1.18 Clearing and Grubbing: Clearing and grubbing shall conform to the provisions in Section 16, "Clearing and Grubbing," of the Standard Specifications and these Special Provisions.

Any trees and/or stumps to be removed will be marked by the Engineer and shall be verified by the Contractor in company with the Engineer prior to removal. All existing vegetation, outside the areas to be cleared and grubbed, shall be protected from injury or damage resulting from the Contractor's activities.

Trees within the riparian area, as shown on the plans, shall be trimmed back to their stumps. Stumps shall be applied with "Rodeo" Herbicide or equivalent. Payment for applying Herbicide to stumps shall be included in the contract price paid for "CLEARING AND GRUBBING" and no separate payment will be made therefor.

"CLEARING AND GRUBBING" will be paid for on a lump sum basis in the same manner specified for clearing and grubbing in Section 16, "Clearing and Grubbing," of the Standard Specifications

10-1.19 Earthwork: Earthwork shall conform to the provisions in Section 19, "Earthwork," of the Standard Specifications and these Special Provisions.

When excavated material is disposed of outside the highway right-of-way, the loading and hauling of such material will be considered as work done under the contract and shall be subject to the labor requirements of the contract.

Any soil exported from the project site may be contaminated with invasive weeds and shall be disposed of at a certified, local landfill.

The labor requirements of the contract shall apply regardless of whether or not the material is sold or donated and the forces involved in the loading and hauling of the material will be considered employees of the Contractor or subcontractor performing work on the contract

Structure excavation and backfill:
Excavation and Backfill material in connection with catch basins, curb inlets, manholes, and storm drain pipe shall be included in the contract price paid for such required work, and no additional payment will be made therefor.

Roadway Excavation:
The contract price paid per cubic yard for "ROADWAY EXCAVATION" shall include full compensation for furnishing all labor, materials, tools, equipment and incidentals and for doing all the work involved in the roadway excavation, complete in place, including saw cutting and removal of concrete driveways as shown on the plans, and removal and disposal of excess or unsuitable material, as specified in the Standard Specifications and these Special Provisions, and as directed by the Engineer.

Beachnut Avenue:
There is approximately 131 cubic yards of surplus excavated material.

Price Street:
There is approximately 313 cubic yards of surplus excavated material.

Thompson Avenue:
There is approximately 364 cubic yards of surplus excavated material.

10-1.20 Embankment Construction (Pedestrian Pathway): Embankment Construction, for the pedestrian pathway, shall conform to the provisions in Section19-6 "Embankment Construction", of the Standard Specifications.

At the option of the Contractor, and to the extent that material from required

excavation within the project limits is available, embankment shall be constructed of imported borrow or of material obtained from required excavation within the project limits or a combination of borrow and material obtained from required excavation within the project limits.

Spread of invasive species shall be avoided by ensuring that all imported fill be weed free and clean of deleterious materials.

The contract price paid per cubic yard for "EMBANKMENT CONSTRUCTION (PEDESTRIAN PATHWAY)" shall include full compensation for furnishing all labor, materials, (except material obtained from excavation within the project limits), tools, equipment, and incidentals and for doing all the work involved in constructing embankments, complete in place, including supplying and hauling borrow material, spreading and compacting embankment material, and compaction and preparation of the subgrade at the grading plane in embankment areas, all as shown on the plans, as specified in the Standard Specifications and these Special Provisions, and as directed by the Engineer.

10-1.21 Class 2 Aggregate Base: Aggregate Base shall conform to the provisions in Section 26, "Aggregate Bases," of the Standard Specifications and these Special Provisions.

Aggregate base shall be Class 2.

Do not store reclaimed asphalt concrete or aggregate base with reclaimed asphalt concrete within 100 feet measured horizontally of any culvert, watercourse, or bridge.

Preparing Subgrade shall be included in the contract price paid per cubic yard for "CLASS 2 AGGREGATE BASE", and conform to Section 19 "Earthwork" of the Standard Specifications and these Special Provisions and consist of excavating, scarifying, grading and compacting, the existing aggregate base at the locations shown on the Plans for reconstruction of the pavement structural section, and import and incorporation of additional aggregate base as required to construct the structural section to the specified grades shown on the plans including construction of detours. Watering, spreading and compaction shall conform to the provisions of Section 26, "Aggregate Bases", of the Standard Specifications.

"CLASS 2 AGGREGATE BASE" will be measured and paid by the cubic yard in the manner specified in Section 26, "Aggregate Bases," of the Standard Specifications.

10-1.22 Cold Plane Asphalt Concrete Pavement: Existing asphalt concrete shall be planed at the locations and to the dimensions shown on the plans, as specified in these Special Provisions, and as directed by the Engineer.

The Contractor shall conduct the cold planning operation in such a manner that no longitudinal drop-offs within the traveled way in either direction will be allowed at the end of each Working Day. In addition, a longitudinal drop-off of more than 0.15 remaining between the existing pavement and the planed area will not be allowed when the work area is opened to public traffic. The Contractor shall construct a temporary asphalt concrete taper at the locations opened to public traffic. The taper shall be constructed on a slope of 10:1 or flatter between the adjacent edge and level of the existing pavement left in place and level of the cold plane work.

When transverse joints are cold planed no drop-offs will be allowed between existing roadway and cold plane surfaces within the traveled way in either direction at the end of each Working Day. The Contractor shall construct a temporary asphalt concrete taper before the roadway is opened to public traffic. The taper shall be constructed on a slope of 30:1 or flatter between the adjacent edge and level of the existing pavement left in place and level of the cold planed work.

Asphalt used for temporary tapers shall be commercial quality and may be spread and compacted by any method approved by the Engineer that will produce a smooth riding surface. Temporary tapers shall be maintained by the Contractor at their own expense. Temporary tapers shall be removed, including all loose material, before placing permanent surfacing.

The Contractor shall place the construction warning sign W37 (BUMP) mounted on a portable barricade after each cold plane operation has been performed, in both directions of travel, and prior to opening the work area to public traffic. The Contractor shall maintain these warning signs, until permanent asphalt concrete surfacing eliminates the drop off.

Cold planning includes areas adjacent to conforms, gutters, around existing underground utilities and transition areas, and will be measured by the square yard. The quantity to be paid for will be the actual area of surface planed irrespective of the number of passes required.

The depth, width and shape of the cut shall be as indicated on the typical cross sections or as directed by the Engineer. The final cut shall result in a uniform surface conforming to the typical cross sections. The outside lines of the plane area shall be neat and uniform. The road surfacing to remain in place shall not be damaged in any way. The Contractor's attention is directed to the requirements of "Maintaining Traffic" of these Special Provisions.

The material planed for the roadway surface, including material deposited in existing gutters or on the adjacent traveled way, shall be immediately removed from the site of the work and disposed of as provided in Section 7-1.13, "Disposal of Material Outside the Highway Right-of-Way," of the Standard Specifications, or as specified herein. The removal crew shall follow within 50 feet of the planer, unless otherwise directed by the Engineer.

The contract price paid per square yard for, "COLD PLANE ASPHALT CONCRETE PAVEMENT (0.30' MAX.)" to depth specified shall include full compensation for furnishing all labor, materials, tools, equipment, and incidentals, and for doing all work involved in cold planing asphalt concrete surfacing and disposing of material removed, as specified in these Special Provisions and as directed by the Engineer.

10-1.23 Hot Mix Asphalt: Hot mix asphalt (HMA) shall be Type A using the Method process, and shall conform to the provisions in Section 39, "Hot Mix Asphalt," of the Standard Specifications and these Special Provisions.

The grade of asphalt binder to be mixed with aggregate for HMA Type A must shall be Performance Grade PG 64-10 and shall conform to the provisions in Section 92,

"Asphalts," of the Standard Specifications

Aggregate grading requirements for HMA Type A shall be ½ inch Maximum

Construction:

Vertical Joints:
Do not leave a vertical joint more than 0.15 foot high between driveways and adjacent lanes.

Place HMA on adjacent traveled way lanes so that at the end of each work shift, the distance between the ends of HMA layers on adjacent lanes is between 5 feet and 10 feet. Place additional HMA along the transverse edge at each lane's end and along the exposed longitudinal edges between adjacent lanes. Hand rake and compact the additional HMA to form temporary conforms. You may place Kraft paper, or another approved bond breaker, under the conform tapers to facilitate the taper removal when paving operations resume.

Widening:
If widening existing pavement, construct new structural section on both sides of the existing pavement to match the elevation of the existing pavement's edge for the project's entire length before placing HMA over the existing pavement.

Conform Tapers:
Place shoulder conform tapers concurrently with the adjacent lane's paving.

Smoothness:
The first paragraph 39-1.12A is hereby modified to read: "Determine HMA smoothness with a straightedge." Section 30-1.12C "Profilograph", of the Standard Specifications shall not apply. The fourth paragraph of Section 39-1.12D, "Smoothness Correction", is hereby modified to read: "After grinding, measure the ground HMA pavement surface with a 12-foot straightedge until the pavement is within specified tolerances. If straightedged pavement cannot be ground to within specified tolerances, remove and replace the pavement."

Compaction Testing:
Relative density of HMA of 0.15 foot or more, and in widths 5 feet or more will be determined by nuclear gage in backscatter mode in accordance with California Test 375.

Section 39-1.04F, "Cores," of the Standard Specification is hereby deleted.

The fourth and fifth paragraphs of Section 39-2.03A, "Testing," are hereby modified to read:

"The Engineer determines the percent of maximum theoretical density of the HMA in 500 ton lots, using a calibrated nuclear gauge, with a minimum of ten tests per lot. The Engineer will provide the Contractor the final results of the nuclear gauge tests based on the maximum theoretical density of that day's production within 24 hours. If the maximum theoretical density results for any day's production are not available by the end of shift, the Engineer will provide the Contractor preliminary results based on the maximum theoretical density of a previous day's material.

If the relative compaction of any lot, based on the calibrated nuclear gauge, is less than 89%, or greater than 99%, the Contractor shall take two cores from each 500 ton lot at random locations designated by the Engineer, in accordance with the procedures specified above. The Engineer determines the percent of maximum theoretical density for each core by determining the core's density and dividing by the maximum theoretical density. The average percent of maximum theoretical density of the two cores will be considered final for determining removal and replacement requirements."

Measurement and Payment: "HOT MIX ASPHALT (TYPE A)" will be measured and paid for by the ton in the manner specified in Section 39, "Hot Mix Asphalt," of the Standard Specifications.

10-1.24 Hot Mix Asphalt (Miscellaneous Areas): This work includes producing hot mix asphalt (HMA) and placing it on miscellaneous areas and shall conform to the provisions in Section 39, "Hot Mix Asphalt," of the Standard Specifications and these Special Provisions.

Placing hot mix asphalt (miscellaneous area) is limited to driveway conforms, curb and gutter conforms, speed humps, and crosswalk table as shown on the plans or specified in these Special Provisions.

"PLACE HOT MIX ASPHALT (MISCELLANEOUS AREAS)" will be measured and paid for by the square yard (measured as the in-place compacted area) in the manner specified in Section 39, "Hot Mix Asphalt," of the Standard Specifications, in addition to the price paid for material involved under the contract price per ton for "HOT MIX ASPHALT (TYPE A)".

Full compensation for tack coat for miscellaneous areas is considered as included in the contract price paid per ton for the hot mix asphalt used in miscellaneous areas and no separate payment will be made therefor.

10-1.25 Speed Table and Speed Humps:

Speed Tables and Speed Humps shall be constructed using Hot Mix Asphalt Type A. Hot Mix Asphalt (Type A) shall conform to the provisions in Section 39, "Hot Mix Asphalt," of the Standard Specifications and these Special Provisions.

Aggregate grading requirements for Speed Table and Speed Hump HMA Type A shall be 3/8 inch Maximum.

Paint binder (tack coat) shall be applied to existing surfaces to be surfaced and between layers of asphalt concrete, except when eliminated by the Engineer.

Advance warning markings and pavement markings for speed table and speed humps shall per figure 3B-29, 30 and 31 of the California MUTCD (Manual on Uniform Traffic Control Devices). Payment for markings is not included in the cost paid for the speed hump.

Full compensation for "speed table", "speed hump", and for furnishing all labor, materials, tools, equipment and incidentals, and for doing all the work involved in installing speed table and speed humps in the final position, including all necessary, cleaning, surface preparation of the existing roadway, and tack coat application as shown on the plans, shall be considered as included in the contract price paid for "PLACE HOT MIX ASPHALT (MISCELLANEOUS AREAS)" and no additional compensation will be allowed therefor.

10-1.26 Hot Mix Asphalt Dike: Hot mix asphalt dikes shall be installed at the locations shown on the project plans and shall conform to the provisions in Section 39, "Hot Mix Asphalt," of the Standard Specifications and these Special Provisions.

The asphalt binder used for asphalt dikes shall be Performance Grade PG 70-10 and shall conform to the provisions in Section 92, "Asphalts," of the Standard Specifications.

Aggregate for hot mix asphalt dikes shall be 3/8" Maximum.

Measurement and Payment: "PLACE HOT MIX ASPHALT DIKE (TYPE A)" will be measured and paid for by the linear foot (measured horizontally) in the manner specified in Section 39, "Hot Mix Asphalt," of the Standard Specifications, in addition to the price paid for material involved under the contract price per ton for "PLACE HOT MIX ASPHALT (TYPE A)".

10-1.27 Concrete Structures: Portland cement concrete structures shall conform to the provisions in Section 51, "Concrete Structures," of the Standard Specifications and these Special Provisions.

Concrete for retaining wall footings shall be Class 2 and conform to the provisions in Section 90, "Portland Cement Concrete," of the Standard Specifications.

The estimated quantity for, "CLASS 2 CONCRETE (TYPE 6A RETAINING WALL FOOTING)," shall be a final pay quantity, measured and paid for by the cubic yard in the manner specified in Section 51, "Concrete Structures," of the Standard Specifications.

10-1.28 Type 6A Retaining Wall: Type 6 retaining wall, consisting of a reinforced concrete footing and a reinforced concrete masonry unit stem, shall conform to the provisions in Section 51, "Concrete Structures," and Section 52, "Reinforcement," of the Standard Specifications and these Special Provisions.

Wall stems shall be constructed of reinforced concrete masonry units.

Hollow load-bearing concrete masonry units shall conform to the requirements in ASTM Designation: C90, Type II and shall be of uniform color and size.

The concrete masonry units shall be split-face of nominal size and texture and of uniform color. The color shall be tan, selected from the manufacturer's standards.

Cementitious material for grout and mortar shall conform to Section 90-2.01, "Cementitious Materials," of the Standard Specifications.

Hydrated lime shall conform to the requirements in ASTM Designation: C 207, Type S.

Mortar sand shall be commercial quality.

Caulking, for sealing expansion joints, shall be a nonsag polysulfide or polyurethane material conforming to the requirements in ASTM Designation: C 920.

Mortar for laying masonry units shall consist, by volume, of one part cementitious material, 0 to 0.5 parts hydrated lime, and 2.25 to 3 parts mortar sand. Sufficient water shall be added to make a workable mortar. Each batch of mortar shall be accurately measured and thoroughly mixed. Mortar shall be freshly mixed as required. Mortar shall not be retempered more than one hour after mixing.

Aggregate for grout used to fill masonry units shall consist of fine aggregate and coarse aggregate conforming to the provisions in Section 90-2.02, "Aggregates," of the Standard Specifications. At least 20 percent of the aggregate by weight shall be coarse aggregate. The Contractor shall determine the grading except that between 90 percent and 100 percent of the combined grading shall pass the ½-inch sieve.

At the option of the Contractor, grout for filling masonry units may be proportioned either by volume or weight. Grout shall contain only enough water to cause it to flow and fill the voids without segregation. The maximum amount of free water shall not exceed 0.7 times the weight of the cementitious material.

Grout proportioned by volume shall consist of at least one part cementitious material and 4.5 parts aggregate. Aggregate volumes shall be based on a loose, air-dry condition.

Grout proportioned by weight shall contain at least 590 pounds of Portland cement per cubic yard.

Concrete masonry unit construction shall be true and plumb. Recesses in the units for horizontal reinforcement shall be provided.

Cleanout openings shall be provided at the bottoms of all cells where the height of wall is in excess of 4 feet. The cleanouts shall be sealed before filling with grout, after inspection.

Mortar joints shall be approximately 3/8 inch wide. Units shall be laid with full mortar coverage of the face in both the vertical and horizontal joints, except where weep holes are specified. Vertical joints shall be shoved tight. Exposed joints shall be concave, tooled smooth.

All cells in the hollow masonry unit shall be filled solidly with grout. All grout shall be consolidated at the time of pouring by puddling or vibrating. The top lift of grout shall be placed approximately one inch below the top of the units to provide mortar cap.

The cement mortar cap shall conform to the provisions for mortar.

Splashing, staining or spotting on the exposed face of the wall stem shall be removed.

Pay quantities of the reinforced concrete masonry unit stem for Type 6A retaining walls will be determined by the square foot of completed wall stem, including the cap, measured along the horizontal length and the vertical height from the top of footing to the top of the wall.

The contract price paid per square foot for "RETAINING WALL STEM (TYPE 6A)" shall include full compensation for furnishing all labor, materials, tools, equipment, and incidentals, and for doing all the work involved in constructing the reinforced concrete masonry unit retaining wall stem, including excavation, removal, and disposal of surplus or unsuitable material, furnishing and placing bar reinforcing

steel and concrete, and all appurtenant work and materials for constructing the walls, complete in place, as shown on the plans, as specified in the Standard Specifications and these Special Provisions, and as directed by the Engineer.

The contract price paid per cubic yard for "CLASS 2 CONCRETE (TYPE 6A RETAINING WALL FOOTING) shall include full compensation for furnishing all labor, materials, (including reinforcement), tools, equipment, and incidentals, and for doing all the work involved in constructing the reinforced concrete footing, including excavation, removal and disposal of surplus or unsuitable material, furnishing concrete and placing bar reinforcing steel, and all appurtenant work and materials for constructing the footing, complete in place, as shown on the plans, as specified in the Standard Specifications and these Special Provisions, and as directed by the Engineer.

10-1.29 Catch Basins, Curb Inlets, and Manhole: Catch Basins, Curb Inlets and Manholes shall be cast in place or pre cast, according to the details shown on the plans, these Special Provisions, the Standard Specifications, and as directed by the Engineer.

The contract price paid per cubic yard for "MINOR CONCRETE (MINOR STRUCTURE)", shall include full compensation for furnishing all labor, materials, tools, equipment, and incidentals and for doing all the work involved in constructing the items described above, including bar reinforcing steel, backfill, and excavation to the lines and grades as shown on the plans, as specified in the Standard Specifications and these Special Provisions, and as directed by the Engineer.

10-1.30 Pedestrian Bridge Abutment and Wingwall: "CLASS 2 CONCRETE (BRIDGE ABUTMENT & WINGWALL)", shall conform to the provisions in Section 51, "Concrete Structures," of the Standard Specifications and these Special Provisions

Bridge abutments, footings and wing walls shall be designed by a civil engineer registered to practice in the State of California. The contractor shall submit signed and stamped shop drawings and structural calculations for review and approval by the engineer prior to construction.

The pedestrian bridge abutments and wing walls shall be cast in place and shall be constructed using concrete with a minimum 28-day strength (f'c) of 3600 psi. Footings shall be provided for the abutment and wingwall, and shall be designed and constructed in accordance with the recommendations in the soils report titled "Foundation Report Proposed Pedestrian Bridges Nipomo, California", prepared by "Kleinfelder, dated December 3, 2008, the Standard Specifications, and these Special Provisions.

Unreinforced lean concrete (about 3 sack mix) placed between the bottom of the structural footing and the bearing elevations, and dowelled to the structural footing, and constructed in accordance with the recommendations in the soils report update letter titled "Addendum to Foundation Report Pedestrian Bridges at Haystack Creek Nipomo, California", prepared by "Kleinfelder, dated December 10th, shall be included in the cost paid for "CLASS 2 CONCRETE (BRIDGE ABUTMENT & WINGWALL)".

Concrete for abutments, footings, and wing walls shall be Class 2 and shall conform to the provisions in Section 90, "Portland Cement Concrete," of the Standard Specifications

Wingwalls shall include metal hand railings in accordance with Standard Plan 606-2(Type C) of the APWA "Standard Plans for Public Works Construction" ("Green Book").

Payment for concrete abutment and wingwall design costs, structural calculations, shop drawing preparation, and submittal shall be included in the cost paid for "CLASS 2 CONCRETE (BRIDGE ABUTMENT & WINGWALL)".

The contract price paid for "CLASS 2 CONCRETE (BRIDGE ABUTMENT & WINGWALL)" shall be a lump sum for each bridge site and shall include full compensation for furnishing all labor, materials, tools, equipment, and incidentals and for doing all the work involved in designing and constructing the items described above, including design, preparation and submittal of shop drawings and structural calculations, excavation, removal and disposal of surplus or unsuitable material, furnishing and installing concrete, bar reinforcing steel, anchor bolts, structural backfill, and all appurtenant work and materials, to the lines and grades as shown on the plans, as specified in the Standard Specifications and these Special Provisions, and as directed by the Engineer.

10-1.31 Special Specifications for Prefabricated Bridge

1.0 GENERAL

1.1 Scope

These specifications are for a fully engineered clear span bridge of steel construction and shall be regarded as minimum standards for design and construction.

1.2 Qualified Suppliers

Each bidder is required to identify their intended bridge supplier as part of the bid submittal. Qualified suppliers must have at least 5 years experience fabricating these type structures.

Pre-approved Manufacturers:
CONTECH Bridge Solutions Inc.
8301 State Highway 29 North
Alexandria, Minnesota 56308
1-800-328-2047

The Contractor must provide the following documentation, for any proposed supplier who is not pre-approved, within 7 days after award of the contract:

- Product Literature

- All documentation to insure the proposed substitution will be in compliance with these specifications. This shall include:

  - Representative design calculations
  - Representative drawings
  - Splicing and erection procedures
  - Warranty information
  - Inspection and Maintenance procedures
  - AISC Shop Certification
  - Welder Qualifications

- Proposed suppliers must have at least five (5) years experience designing and fabricating these type structures and a minimum of five (5) successful bridge projects, of similar construction, each of which has been in service at least three (3) years. List the location, bridge size, owner, and a contact for reference for each project.

The County will require 7 days to evaluate and verify the accuracy of the submittal. If the County determines that the qualifying criteria have not been met, the Contractor's proposed supplier will be rejected. No claim will be allowed for damages or extensions of time because of delays in work resulting from rejection of proposed supplier.

2.0 GENERAL FEATURES OF DESIGN

2.1 Span

Bridge spans shall be 46'-0" and 53'-0" (straight line dimension)", and shall be as measured from each end of the bridge structure.

2.2 Width

Bridge width shall be 6'-0" and shall be as measured from the inside face of structural elements at deck level.

2.3 Bridge System Type

Bridge(s) shall be designed as a Half-Through Truss System that has one (1) diagonal per panel and plumb end vertical members. Interior vertical members may be either plumb or perpendicular to the chord faces.

Bridge(s) shall be designed utilizing an underhung floor beam (top of floor beam welded to the bottom of the bottom chord) or be designed utilizing an H-Section configuration where the floor beams are placed up inside the trusses and attached to the truss verticals.

The bridge manufacturer shall determine the distance from the top of the deck to the top and bottom truss members based upon structural and/or shipping requirements.

The top of the top chord shall not be less than 54 inches above the deck (measured from the high point of the riding surface) on bike path structures.

2.4 Member Components

All members of the vertical trusses (top and bottom chords, verticals, and diagonals) shall be fabricated from square and/or rectangular structural steel tubing. Other structural members and bracing shall be fabricated from structural steel shapes or square and rectangular structural steel tubing.

Unless the floor and fastenings are specifically designed to provide adequate lateral support to the top flange of open shape stringers (w-shapes or channels), a minimum of one stiffener shall be provided in each stringer at every floor beam location.

2.5 Attachments

2.5.1 Safety Rails

Horizontal safety rails shall be placed on the structure up to a minimum height of 48" above the deck surface. Safety rails shall be placed so as to prevent a 4″ sphere from passing through the truss. Safety rails shall be placed on the inside or outside of the structure at the bridge fabricator's option. Safety rails placed on the inside of the truss shall have their ends sealed and ground smooth so as to produce no sharp edges.

The safety rail system shall be designed for an infill loading of 200 pounds, applied horizontally at right angles, to a one square foot area at any point in the system.

2.5.2 Toe Plate

The bridge shall be supplied with a removable toe plate mounted to the inside face of both trusses. The toe plate shall be a minimum of 4 inches high. Toe plating will be attached to the truss members at a height adequate to provide a 2″ gap between the bottom of the plate and the top of the deck or the top of the bottom chord, whichever is higher. The span of unstiffened flat toe plating (from center to center of supports) shall not exceed 5′-8″.

2.5.3 Rubrails

The bridge will be supplied with a 1"x 5-1/2" (actual size) naturally durable hardwood Ipe (Tabebuia Spp Lapacho Group) rubrail. Rubrail shall be partially air dried to a moisture content of 15% to 20%, shall be supplied S4S (surfaced four sides), E4E (eased four edges), with the edges eased to a radius of 1/8″. Measured at 30% moisture content, the width and thickness shall not vary from specified dimensions by more than ± 0.04 inches. Ends of each piece shall be sealed with "Anchorseal" Mobil CER-M or an approved equal aquious wax log sealer.

Rubrails shall be attached flush to the inside face of the bridge truss verticals and fastened with two carriage bolts at each support location. The span of the rubrail from centerline to centerline of support shall not exceed 6′-6″.

The top of the rubrail shall be 38″ above the top of the deck (measured at the outside edge of the deck).

2.6 Camber

The bridge shall have a vertical camber dimension at midspan equal to 100% of the full dead load deflection plus 1% of the full length of the bridge.

2.7 Elevation Difference

The bridge abutments shall be constructed at the same elevation on both ends of the bridge.

3.0. ENGINEERING

Structural design of the bridge structure(s) shall be performed by or under the direct supervision of a licensed professional engineer and done in accordance with AASHTO LRFD Bridge Design Specifications, AASHTO LRFD Guide Specifications for the Design of Pedestrian Bridges, and recognized engineering practices and principles. The engineer shall be licensed to practice in the state of California.

4.0 MATERIALS

4.1 Steel

4.1.1 Painted Steel

All Blast Cleaning shall be done in a dedicated OSHA approved indoor facility owned and operated by the bridge fabricator. Blast operations shall use Best Management Practices and exercise environmentally friendly blast media recovery systems.

Bridges which are to be painted shall be fabricated using ASTM A500 grade C cold-formed welded square and rectangular tubing (Fy = 50,000 psi) and/or high strength, low allow, atmospheric corrosion resistant ASTM A847 cold-formed welded square and rectangular tubing (Fy = 50,000 psi) and/or ASTM A588, ASTM A242, ASTM A572, ASTM A 606 (Fy = 50,000 psi) and/or ASTM A36 (Fy = 36,000 psi) plate and structural steel shapes. Splice plates, if required, shall be ASTM A588. All painted bridges shall be painted in a dedicated indoor OSHA approved paint facility that is owned and operated by the bridge fabricator.

The fabricator shall hold a "Sophisticated Paint Endorsement" as set forth by AISC.

4.2 Decking

4.2.1 Concrete Deck

The bridge shall be furnished with a stay-in-place galvanized steel form deck suitable for pouring a reinforced concrete slab. The form deck shall be designed to carry the dead load of the wet concrete, weight of the form decking, plus a construction load of 20 PSF uniform load or a 150 pound concentrated load on a 1′-0″ wide section of deck. When edge supports are used, deflection is limited to 1/180 of the span or 3/4″, whichever is less. Without edge supports, deflection shall be limited to 1/180 of the span or 3/8″, whichever is less.

The form deck shall be either smooth or composite. Composite decking shall not be used as reinforcing when designing for vehicular wheel loads. The form deck material shall be supplied in accordance with ASTM A653 and galvanized to a minimum G90 coating weight.

The deck slab shall be constructed using concrete with a minimum 28-day strength (f_c') of 3600 psi.

- □ Normal weight concrete (145 PCF)

Concrete deck design shall be performed by the bridge manufacturer. Concrete decks shall be designed for concentrated loads as specified in Section 3.1.3. The wheel loads used for deck design shall be distributed per the Structural Engineering Handbook, 4th Ed., by Gaylord, Gaylord and Stallmeyer. The load distribution width is equal to the tire width plus 0.6 times the slab span but in no case will it be greater than the smallest of the following values:

1. 1/2 the deck width,
2. 75% of the wheel track spacing, or
3. 4′ + 0.06S, per AASHTO, where S = slab span in feet

4.2.2 Composite Decking

Composite decking shall be used if concrete decking cannot be placed prior to the rainy season, October 15th. This date can be extended to November 1st, depending on weather conditions and permission from California Department of Fish and Game.

5.0 WELDING

5.1 Welding

Welding and weld procedure qualification tests shall conform to the provisions of ANSI/AWS D1.1 "Structural Welding Code", 1996 Edition. Filler metal shall be in accordance with the applicable AWS Filler Metal Specification (i.e. AWS A 5.28 for the GMAW Process). For exposed, bare, unpainted applications of corrosion resistant steels (i.e. ASTM A588 and A847), the filler metal shall be in accordance with AWS D1.1, Section 3.7.3.

5.2 Welders

Welders shall be properly accredited operators, each of whom shall submit certification of satisfactorily passing AWS standard qualification tests for all positions with unlimited thickness of base metal, have a minimum of 6 months experience in welding tubular structures and have demonstrated the ability to make uniform sound welds of the type required.

6.0 SUBMITTALS

6.1 Submittal Drawings

Schematic drawings and diagrams shall be submitted to the Engineer for review. Submittal drawings shall be unique drawings, prepared to illustrate the specific portion of the work to be done. All relative design information such as member sizes, bridge reactions, and general notes shall be clearly specified on the drawings. Drawings shall have cross referenced details and sheet numbers. All drawings shall be signed and sealed by a Professional Engineer who is licensed in accordance with Section 3.0.

6.2 Structural Calculations

Structural calculations for the bridge superstructure shall be submitted by the bridge manufacturer and reviewed by the Engineer. All calculations shall be signed and sealed by a Professional Engineer who is licensed in accordance with Section 3.0. The calculations shall include all design information necessary to determine the structural adequacy of the bridge. The calculations shall include the following:

- All AASHTO LRFD stress checks for axial, bending and shear forces in the critical member of each truss member type (i.e. top chord, bottom chord, floor beam, vertical, etc.).
- Checks for the critical connection failure modes for each truss member type (i.e. vertical, diagonal, floor beam, etc.). Special attention shall be given to all welded tube on tube connections (see section 3.3.2 for design check requirements).
- All bolted splice connections.
- Main truss deflection checks.
- U-Frame stiffness checks (used to determine K factors for out-of-plane buckling of the top chord) for all half through or "pony" truss bridges.
- Deck design.

NOTE: The analysis and design of triangulated truss bridges shall account for moments induced in members due to joint fixity where applicable. Moments due to both truss deflection and joint eccentricity must be considered.

6.3 Welder certifications in compliance with AWS standard qualification tests.

6.4 Welding procedures in compliance with Section 5.1.

7.0 FABRICATION

7.1 General Requirements

7.1.1 Drain Holes

When the collection of water inside a structural tube is a possibility, either during construction or during service, the tube shall be provided with a drain hole at its lowest point to let water out.

7.1.2 Welds

Special attention shall be given to developing sufficient weld throats on tubular

members. Fillet weld details shall be in accordance with AWS D1.1, Section 3.9 (See AWS Figure 3.2). Unless determined otherwise by testing, the loss factor "Z" for heel welds shall be in accordance with AWS Table 2.8. Fillet welds which run onto the radius of a tube shall be built up to obtain the full throat thickness (See Figure 7.1). The maximum root openings of fillet welds shall not exceed 3/16" in conformance with AWS D1.1, Section 5.22. Weld size or effective throat dimensions shall be increased in accordance with this same section when applicable (i.e. fit-up gaps> 1/16").

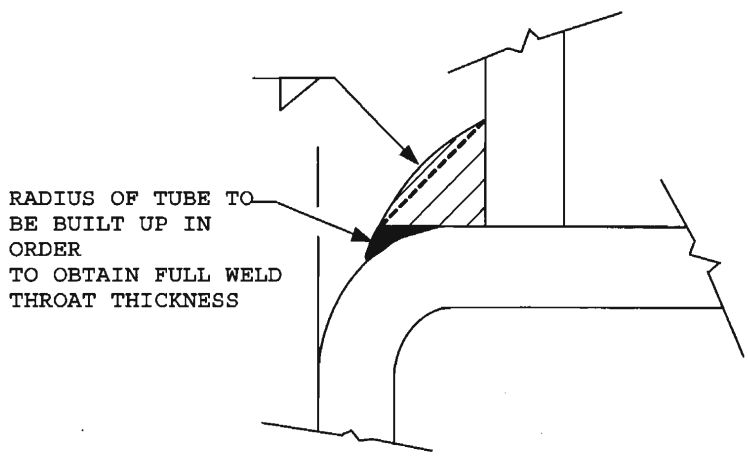

FIGURE 7.1
BUILD UP RADIUS WELD

The contractor shall have verified that the throat thickness of partial joint penetration groove welds (primarily matched edge welds or the flare-bevel-groove welds on underhung floor beams) shall be obtainable with their fit-up and weld procedures. Matched edge welds shall be "flushed" out when required to obtain the full throat or branch member wall thickness.

For full penetration butt welds of tubular members, the backing material shall be fabricated prior to installation in the tube so as to be continuous around the full tube perimeter, including corners. Backing may be of four types:

- A "box" welded up from four (4) plates.
- Two "channel" sections, bent to fit the inside radius of the tube, welded together with full penetration welds.
- A smaller tube section which slides inside the spliced tube.
- A solid plate cut to fit the inside radius of the tube.

Corners of the "box" backing, made from four plates, shall be welded and ground to match the inside corner radii of the chords. The solid plate option shall require a weep hole either in the chord wall above the "high side" of the plate or in the plate itself. In all types of backing, the minimum fit-up tolerances for backing must be maintained at the corners of the tubes as well as across the "flats".

7.1.3 Sealing and Caulking

To prevent rust runs on painted structures, open ends of all tubes shall be capped and seal welded. Wherever practical, member end connections and steel on steel contact surfaces, such as stringer to floor beam connections, shall be welded all around. Long seams between members or any seam which cannot be practically welded shall be caulked.

7.1.4 Paint Clearance

To provide adequate clearance for initial painting and future recoating, a minimum of a 1-1/2″ gap shall be provided between any two opposing painted surfaces. If this gap cannot be maintained, member sizes shall be increased or filler plates added to bring the opposing surfaces in contact for seal welding.

7.2 Quality Certification

Bridge(s) shall be fabricated by a fabricator who is currently certified by the American Institute of Steel Construction to have the personnel, organization, experience, capability, and commitment to produce fabricated structural steel for the category "Major Steel Bridges" as set forth in the AISC Certification Program with Fracture Critical Endorsement. Quality control shall be in accordance with procedures outlined for AISC certification. For painted structures, the fabricator must hold a "Sophisticated Paint Endorsement" as set forth in the AISC certification program. Furthermore, the bridge(s) shall be fabricated in a facility owned and/or leased by the corporate owner of the manufacturer, and fully dedicated to bridge manufacturing.

8.0 FINISHING

8.1 Blast Cleaning

8.1.1 Painted Steel

All exposed surfaces of steel to be painted shall be blast cleaned in accordance with the appropriate section of the Steel Structures Painting Council Surface Preparation Specifications as recommended by the paint manufacturer.

8.2 Painting

All exposed steel surfaces shall receive shop applied primer and finish coats. The paint system shall consist of the following:

- Primer: Devoe (Devran DC 236K) Epoxy Primer, or approved equal
- Top Coat: Devoe (Devathane DC 378K or 379K) aliphatic urethane, or approved equal

As manufactured by ICI Paints 1-800-984-5444 or www.icipaintstores.com (www.devoecoatings.com)

The primer and top coat shall be applied in accordance with and to the minimum dry film thickness listed in the paint manufacturer's recommendations. The top coat paint color shall be *A588 WEATHERING*, or approved equal.

NOTE: Unless specified otherwise, connection faying surfaces and the interior surfaces of all structural tubing shall not be coated.

8.2.1 Touch-up Paint

A nominal quantity of touch-up paint shall be provided to repair marred surfaces. Touch-up painting includes any and all painting required after the structure reaches the site, and is the responsibility of the Contractor. This painting shall include, but not be limited to, the following areas:

1. Any areas damaged due to shipping, handling, and erection of the bridge and components.
2. Bolt heads and exposed area of bolts and nuts as applicable.
3. Non-galvanized attachments or anchor bolts if not made of corrosion resistant steel.
4. If applicable, small areas (0″ to 2″ each side) around bolted field splices, designed as "slip critical", where one or all paint coats may be required to be left off the faying surfaces.

8.2.2 Painter Qualifications

All painters shall be certified by the appropriate paint manufacturer for proper handling, mixing, thinning (if required) and application of the paint system in accordance with the manufacturer's instructions. The painters shall also be certified by the Department of Transportation in the state in which the bridge is manufactured.

9.0 DELIVERY AND ERECTION

The Contractor shall be responsible to insure that delivery, offloading, and erection of the bridges conforms with the manufacturer's requirements and all applicable federal, state, and local laws and regulations.

The manufacturer shall provide detailed, written instruction in the proper lifting procedures and splicing procedures (if required), and the Contractor shall be responsible to insure that the method and sequence of erection complies with the manufacturer's instructions.

The Contractor shall provide written inspection and maintenance procedures to the Engineer.

10.0 BEARINGS

10.1 Bearing Devices

Bridge bearings shall consist of a steel setting or slide plate placed on the abutment or grout pad. The bridge bearing plate which is welded to the bridge structure shall bear on this setting plate. One end of the bridge will be fixed by fully tightening the nuts on the anchor bolts at that end. The opposite end will have finger tight only nuts to allow movement under thermal expansion or contraction.

The bridge bearings shall sit in a recessed pocket on the concrete abutment. Minimum 28-day strength for the abutment concrete shall be 3,000 PSI. The bearing seat shall be a minimum of 16" wide. The step height (from bottom of bearing to top-of-deck) shall be determined by the bridge manufacturer.

Bridges in excess of 100 feet in length or bridges with dead load reactions of 15,000 pounds or more (at each bearing location) shall have teflon on teflon or stainless steel on teflon slide bearings placed between the bridge bearing plate and the setting plate. The top slide plate shall be large enough to cover the lower teflon slide surface at both temperature extremes.

11.0 FOUNDATIONS

The bridge manufacturer shall determine the number, diameter, minimum grade and finish of all anchor bolts. The anchor bolts shall be designed to resist all horizontal and uplift forces to be transferred by the superstructure to the supporting foundations. Engineering design of the bridge supporting foundations (abutment, pier, bracket and/or footings), including design of anchor bolt embedments, shall be the responsibility of Contractor. The Contractor shall provide all materials (including anchor bolts) for construction of the bridge supporting foundations. The Contractor shall install the anchor bolts in accordance with the manufacturer's anchor bolt spacing dimensions.

13.0 WARRANTY

The bridge manufacturer shall warrant that it can convey good title to the goods, that they are free of liens and encumbrances and that their steel structure(s) are free of design, material and workmanship defects for a period of ten years from the date of delivery. Durable hardwood decking and hardwood attachments shall carry a ten-year warranty against rot, termite damage or fungal decay. Other types of wood and decking material such as Southern Yellow Pine, Douglas Fir and composites carry no warranty.

14.0 APPROVAL CHECKLIST

The following checklist will be used in the evaluation of all submittals to assure compliance with these Special Provisions. This checklist is considered the minimum acceptable requirements for compliance with these specifications. Any deviations from this checklist shall be considered grounds for rejection of the submittal. Any costs associated with delays caused by the rejection of the submittal, due to non-compliance with this checklist, shall be fully borne by the Contractor.

SUBMITTAL DRAWINGS (*Data Required to be Shown):*

- □ Bridge Elevation
- □ Bridge Cross Section
- □ All Member Sizes
- □ All Vertical Truss Members are Square or Rectangular Tubing
    - □ Bridge Reactions
- □ General Notes Indicating
    - □ AISC Stress Conformance
    - □ Material Specifications to be Followed
    - □ Design Live Load
    - □ Design Vehicle Load (If Applicable)
    - □ Design Wind Load
    - □ Other Specified Design Loads
    - □ Welding Process
    - □ Blast Cleaning
    - □ Paint System to be Used (If Applicable)
- □ Paint Color Chart (If Applicable)
- □ Detailed Bolted Splices (If Applicable)
- □ Bolted Splice Location (If applicable)
- □ Signature and Seal of Professional Engineer, licensed in Accordance with Section 3.0

DESIGN CALCULATIONS (*Data Required to be Shown):*

- □ Data Input for 3-D Analysis of Bridge
    - □ Joint Coordinates & Member Incidences
    - □ Joint and Member Loads
    - □ Member Properties
    - □ Load Combinations
- □ AASHTO Member Stress Checks for Each Member Type
- □ Critical Connection Failure Mode Checks For Each Member Type
    - □ Chord Face Plastification Checks
    - □ Punching Shear Checks
    - □ Material Failure Checks (Truss Webs)
    - □ Weld Failure Checks (Effective Length)
    - □ Weld Failure Checks (Ultimate)
    - □ Local Buckling of the Main Member Face Checks
    - □ Main Member Yielding Failure Checks
    - □ Main Member Crippling Failure Checks
- □ Main Member Buckling Failure Checks
- □ Main Member Shear Failure Checks
- □ All Bolted Splice Checks (if applicable)
- □ Main Truss Deflection Checks
- □ Decking Material Checks
    - □"U-Frame" Stiffness Checks (if applicable)
    - □ Interior and End Portal Design Checks (if applicable)
    - □ Determination of Top Chord K Factor Based on "U-Frame" Stiffness (if applicable)
    - □ Consideration of Individual Member Moments Due to Truss Deflection, Joint Fixity and Joint Eccentricity

FABRICATION SUBMITTALS *(Data Required to be Shown):*

□** Written Installation Instructions
□** Written Splicing Instructions
□** Written Maintenance & Inspection Instructions
□** Welder Certifications
□** Welding Procedures
□ Material Certifications (if applicable)
- □ Structural Steel (if applicable)
- □ Decking (if applicable)
- □ Structural Bolts (if applicable)
- □** Quality Control Section of AISC Certification Manual (if applicable)
- □** Painter Certifications (if applicable)
- □ Weld Testing Reports (if applicable)

** NOTE: These items are required to be submitted along with Submittal Drawings and Design Calculations. Those Fabrication Submittal Items not marked are to be submitted prior to shipment of the bridge.

Appendix A

1/K FOR VARIOUS VALUES OF CL/P_c and n

	n						
1/K	4	6	8	10	12	14	16
1.000	3.686	3.616	3.660	3.714	3.754	3.785	3.809
0.980		3.284	2.944	2.806	2.787	2.771	2.774
0.960		3.000	2.665	2.542	2.456	2.454	2.479
0.950			2.595				
0.940		2.754		2.303	2.252	2.254	2.282
0.920		2.643		2.146	2.094	2.101	2.121
0.900	3.352	2.593	2.263	2.045	1.951	1.968	1.981
0.850		2.460	2.013	1.794	1.709	1.681	1.694
0.800	2.961	2.313	1.889	1.629	1.480	1.456	1.465
0.750		2.147	1.750	1.501	1.344	1.273	1.262
0.700	2.448	1.955	1.595	1.359	1.200	1.111	1.088
0.650		1.739	1.442	1.236	1.087	0.988	0.940
0.600	2.035	1.639	1.338	1.133	0.985	0.878	0.808
0.550		1.517	1.211	1.007	0.860	0.768	0.708
0.500	1.750	1.362	1.047	0.847	0.750	0.668	0.600
0.450		1.158	0.829	0.714	0.624	0.537	0.500
0.400	1.232	0.886	0.627	0.555	0.454	0.428	0.383

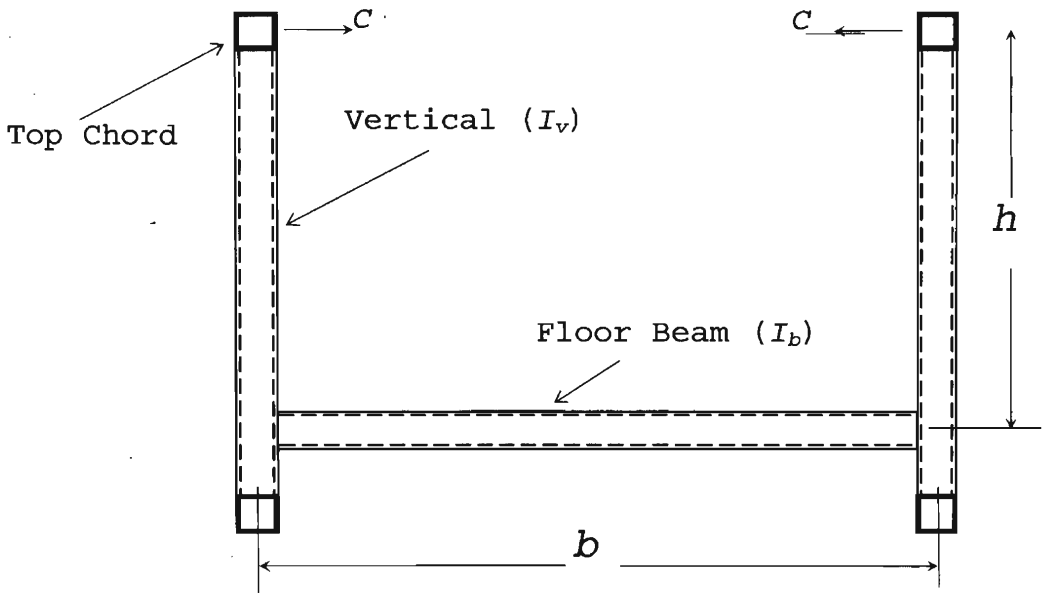

" U - Frame"

Where: $$C = \frac{E}{h^2\,[h/3I_v + b/2I_b]}$$

$L = Length\ in\ inches\ of\ one\ truss\ panel$

$P_c = Buckling\ Load\ (= Top\ Chord\ Compression\ x\ F.S.)$

$n = Number\ of\ Panels$

Reference: Galambos, T.V. (1988) "Guide to Stability Design Criteria for Metal Structures", 4th Ed., PP 515-529. Copyright © 1988. Reprinted by permission of John Wiley and Sons, Inc.

The contract unit price paid for "STRUCTURAL STEEL (BRIDGE)", shall include full compensation for furnishing all labor, materials, tools, equipment, incidentals, and for doing all the work involved in design, preparation and submittals of shop drawings, manufacturing, furnishing, transporting, and installing the steel truss bridge, and all appurtenant work and materials, complete in place, including structural calculations, shop drawing preparation and submittal, as shown on the plans, as specified by in the Standard Specifications and these Special Provisions, and as directed by the Engineer.

10-1.32 Temporary Fences (ESA): Temporary fences shall be furnished, constructed, maintained, and later removed and disposed of as shown on the plans, as specified in these special provisions, and as directed by the Engineer.

Temporary Fence (ESA) shall be installed at the top of bank at Hemrick Creek, as shown on the plans, and will be marked at the beginning of the job by County staff. Contractor shall immediately install fence at marked limits.

Temporary fence shall be at least 4 feet in height.

Temporary fence fabric shall consist of orange colored, ultraviolet stabilized, polymer or shall conform to the specifications for permanent fences as provided in Section 80, "Fences," of the Standard Specifications. Polymer fabric shall consist of polyethylene or polypropylene and shall have a minimum tensile strength rating of 550 pounds per foot.

Used materials may be used providing such used material are good, sound, and are suitable for the purpose intended, subject to the approval of the Engineer.

Materials may be commercial quality providing the dimensions and sizes of said materials are equal to, or greater than, the dimensions and sizes shown on the plans or specified by the specifications.

Posts shall be either metal or wood at the Contractor's option. Galvanizing and painting of steel items will not be required. Treating wood with wood preservatives will not be required. Concrete footings for metal posts will not be required.

Polymer fabric fence shall be constructed in accordance with the manufacturer's recommendations.

Temporary fences that are damaged from any cause during the progress of the work shall be repaired or replaced by the Contractor at this expense.

When no longer required for the work as determined by the Engineer, temporary fences shall be removed. Removed facilities shall become the property of the Contractor and shall be removed from the site of work, except as otherwise provided in this section.

Holes caused by the removal of temporary fences shall be backfilled in accordance with the provisions in the second paragraph of Section 15- 1.02, "Preservation of Property," of the Standard Specifications.

Payment for providing, installing, maintaining, and disposing of temporary fence (TYPE ESA), shall be considered as included in the contract items of work involved and no separate payment will be made therefor.

10-1.33 Plastic Pipe: Storm drain pipe shall be exterior corrugated high density polyethylene pipe (HDPE) with a smooth interior wall Type S, and shall comply with the Caltrans Standard Specifications for Corrugated Polyethylene pipe, as specified in Section 64 "Plastic Pipe", of the Caltrans Standard Specifications. Acceptable products are ADS N-12, equivalent Hancor, or approved equal. The pipe shall have bells and spigot joints equipped with neoprene gaskets, and shall include couplings for use with the pipe under pressure of 5 psi, per manufacturer recommendations.

Culvert bedding material shall conform to requirements as specified in Section 19-3.025 "Culvert Beddings" of the Standard Specifications.

Backfill shall conform to the requirements as specified in Section 19-3.06, "Structure Backfill," of the Standard Specifications.

Compaction shall conform to the requirements as specified in Section 19-5, "Compaction," of the Standard Specifications.

Trench pavement repair shall be included in the price paid for "18" PLASTIC PIPE". Existing pavement that is disturbed and removed while trenching and constructing the storm drain shall be replaced as required by County Standard Trench Repair Drawing R-4 and Trench Detail U-4, and as directed by the Engineer.

3-sack concrete slurry placed between existing utilities and proposed storm drain shall be included in the price paid for "18" PLASTIC PIPE".

Steel Plating Trenches
The Contractor's attention is directed to section "Maintaining Traffic" regarding steel plating. All trenches shall be plated at the end of each day and temporarily paved with cold asphalt concrete.

The contract price paid per foot for "18" PLASTIC PIPE", shall include full compensation for furnishing all labor, materials, tools, equipment, and incidentals and for doing all the work involved in, furnishing, and installing the storm drain, complete in place, including, trench excavation, placement of bedding material, structure backfill, slurry placement between utilities, trench compaction, steel plating trench, trench pavement repair and replacement, and control and removal of water, and all appurtenant work and materials, complete in place, as shown on the plans, as specified in the Standard Specifications and these Special Provisions, and as directed by the Engineer.

10-1.34 Miscellaneous Concrete Construction: Concrete curbs, gutters, sidewalks, driveways, curb ramps, and sidewalk underdrains, shall conform to the provisions in Section 73, "Concrete Curbs and Sidewalks," of the Standard Specifications and these Special Provisions.

Curb ramp detectable warning surface shall consist of raised truncated domes constructed or installed on curb ramps in conformance with the details shown on the plans and these Special Provisions. At the option of the Contractor, the detectable warning surface shall be prefabricated, cast-in-place, or stamped into the surface of the curb ramp. The color of the detectable warning surface shall be yellow conforming to Federal Standard 595B, Color No. 33538.

Prefabricated detectable warning surface shall be in conformance with the requirements established by the Department of General Services, Division of State Architect and be attached in conformance with the manufacturer's recommendations.

Cast-in-place and stamped detectable warning surfaces shall be painted in conformance with the provisions in Section 59-6, "Painting Concrete," of the Standard Specifications.

The finished surfaces of the detectable warning surface shall be free from blemishes.

Prior to constructing the cast-in-place or stamping the detectable warning surface, the Contractor shall demonstrate the ability to produce a detectable warning surface

conforming to the details shown on the plans and these Special Provisions by constructing a 24" x 24" test panel.

Full compensation for constructing or furnishing and installing curb ramp detectable warning surfaces shall be considered as included in the contract price paid per cubic yard for minor concrete (curb ramp) and no separate payment will be made therefor.

The contract price paid per linear foot, measured along the curb face, for "MINOR CONCRETE (CURB & GUTTER)", shall include full compensation for furnishing all labor, materials, tools, equipment and incidentals and for doing all the work involved for furnishing, placing, and finishing concrete curb & gutter, complete in place, including structure backfill, reinforcing steel, and dowels, as shown on the plans, as specified in the Standard Specifications and these Special Provisions, and as directed by the Engineer

The contract price paid per cubic yard for "MINOR CONCRETE (CURB RAMP)", "MINOR CONCRETE (SIDEWALK)", "MINOR CONCRETE (DRIVEWAY)", "MINOR CONCRETE (SPANDREL)", "MINOR CONCRETE (ADA LANDING)", shall include full compensation for furnishing all labor, materials, tools, equipment and incidentals and for doing all the work involved for furnishing, placing, and finishing the items described above, complete in place, including structure backfill, reinforcing steel, dowels, and truncated domes, as shown on the plans, as specified in the Standard Specifications and these Special Provisions, and as directed by the Engineer.

The contract unit price for "MINOR CONCRETE (D-4A SIDEWALK UNDERDRAIN)" and "MINOR CONCRETE (SIDEWALK UNDERDRAIN)", shall include full compensation for furnishing all labor, materials, tools, equipment and incidentals and for doing all the work involved for furnishing, placing, and finishing sidewalk underdrain, complete in place, including structure backfill, reinforcing steel, dowels, anchors, area drains and grates, pipe, connecting existing drain pipe, as shown on the plans, as specified in the Standard Specifications and these Special Provisions, and as directed by the Engineer

10-1.35 Miscellaneous Metal: Frames and covers for storm drain inlets, catch basins, and manholes, shall conform to the details shown on the plans, as specified in Section 75, "Miscellaneous Metal," of the Standard Specifications and these Special Provisions.

The contract unit price paid for "FRAME AND GRATE", and "MANHOLE COVER", shall include full compensation for furnishing all labor, materials, tools, equipment, and incidentals and for doing all the work involved in constructing and installing these items, complete in place, in the final positions shown on the plans, including all necessary concrete, excavation, backfill, hardware and painting, and all appurtenant work and materials, as shown on the plans, as specified in the Standard Specifications and these Special Provisions and no additional compensation will be allowed therefor.

10-1.36 Painted Traffic Stripes and Painted Pavement Markings: Painted traffic stripes and pavement markings shall conform to the provisions in Section 84, "Traffic Stripes and Pavement Markings," of the Standard Specifications and these Special Provisions.

Traffic stripe and pavement marking paint shall conform to the requirements in State Specification No. PTWB-01.

The color of the painted traffic stripes and pavement markings shall conform to the requirements in ASTM Designation: D 6628-01.

Retroreflectivity of the paint traffic stripes and pavement markings shall conform to the requirements in ASTM Designation: D 6359-99. White painted traffic stripes and pavement markings shall have a minimum initial retroreflectivity of 250 mcd m^{-2} lx^{-1}. Yellow painted traffic stripes and pavement markings shall have a minimum initial retroreflectivity of 150 mcd m^{-2} lx^{-1}.

Advance warning markings and pavement markings for speed humps conform to the requirements in figure 3B-31 and 3B-29 of the California MUTCD (Manual on Uniform Traffic Control Devices).

Painted traffic stripes, pavement markings and pavement markers shall be applied no less than 14 calendar days after the seal coat (CSS-1h) has been completed. The Contractor shall maintain traffic during this period of time as provided for elsewhere in these Special Provisions.

"PAINT TRAFFIC STRIPE (2-COAT)", will be measured and paid for by the linear foot in the manner specified in Section 84, "Traffic Stripes and Pavement Markings," of the Standard Specifications.

"PAINT TRAFFIC MARKING (2-COAT)", will be measured and paid for by the square yard in the manner specified in Section 84, "Traffic Stripes and Pavement Markings," of the Standard Specifications.

10-1.37 Pavement Markers: Pavement Markers shall conform to the provisions in Section 85, "Pavement Markers," of the Standard Specifications and these Special Provisions.

Attention is directed to "Traffic Control System For Lane Closure" of these Special Provisions regarding the use of moving lane closures during placement of pavement markers with bituminous adhesive.

"PAVEMENT MARKER (REFLECTIVE)", will be measured and paid for by the unit price in the manner specified in Section 85, "Pavement Markers," of the Standard Specifications.

SECTION 11

AMENDMENTS TO THE STANDARD SPECIFICATIONS

SECTION 11. AMENDMENTS TO STANDARD SPECIFICATIONS

SECTION 5 CONTROL OF WORK
(Issued 03-11-10)

Add:

5-1.055 SUBCONTRACTING

5-1.055A General

No subcontract releases you from the contract or relieves you of your responsibility for a subcontractor's work.

If you violate Pub Cont Code § 4100 et seq., the Department may exercise the remedies provided under Pub Cont Code § 4110. The Department may refer the violation to the Contractors State License Board as provided under Pub Cont Code § 4111.

Except for a building-construction non-federal-aid contract, perform work equaling at least 30 percent of the value of the original total bid with your employees and with equipment owned or rented by you, with or without operators.

Each subcontract must comply with the contract.

Each subcontractor must have an active and valid State contractor's license with a classification appropriate for the work to be performed (Bus & Prof Code, § 7000 et seq.).

Submit copies of subcontracts upon request.

Before subcontracted work starts, submit a Subcontracting Request form.

Do not use a debarred contractor; a current list of debarred contractors is available at the Department of Industrial Relations' Web site.

Upon request, immediately remove and not again use a subcontractor who fails to prosecute the work satisfactorily.

5-1.116 DIFFERING SITE CONDITIONS (23 CFR 635.109)

5-1.116A Contractor's Notification

Promptly notify the Engineer if you find either of the following:

1. Physical conditions differing materially from either of the following:

    1.1. Contract documents
    1.2. Job site examination

2. Physical conditions of an unusual nature, differing materially from those ordinarily encountered and generally recognized as inherent in the work provided for in the contract

Include details explaining the information you relied on and the material differences you discovered.

If you fail to notify the Engineer promptly, you waive the differing site condition claim for the period between your discovery of the differing site condition and your notification to the Engineer.

If you disturb the site after discovery and before the Engineer's investigation, you waive the differing site condition claim.

5-1.116B Engineer's Investigation and Decision

Upon your notification, the Engineer investigates job site conditions and:

1. Notifies you whether to resume affected work
2. Decides whether the condition differs materially and is cause for an adjustment of time, payment, or both

You may protest the Engineer's decision.

SECTION 6 CONTROL OF MATERIALS
(Issued 05-01-09)

Replace Section 6-1.05 with:

6-1.05 SPECIFIC BRAND OR TRADE NAME AND SUBSTITUTION

A reference to a specific brand or trade name establishes a quality standard and is not intended to limit competition. You may use a product that is equal to or better than the specified brand or trade name if approved.

Submit a substitution request within a time period that:

1. Follows Contract award
2. Allows 30 days for review
3. Causes no delay

Include substantiating data with the substitution request that proves the substitution:

1. Is of equal or better quality and suitability
2. Causes no delay in product delivery and installation

6-1.075 GUARANTEE

Guarantee the work remains free from substantial defects for 1 year after contract acceptance except for work parts for which you were relieved of maintenance and protection. Guarantee each of these relieved work parts for 1 year after the relief date.

The guarantee excludes damage or displacement caused by an event outside your control including:

1. Normal wear and tear
2. Improper operation
3. Insufficient maintenance
4. Abuse

5. Unauthorized change
6. Act of God

During the guarantee period, repair or replace each work portion having a substantial defect.

The Department does not pay for corrective work.

During corrective work activities, provide insurance coverage specified for coverage before contract acceptance.

The contract bonds must be in full force and effect until the later of:

1. Expiration of guarantee period
2. Completion of corrective work

If a warranty specification conflicts with Section 6-1.075, "Guarantee," comply with the warranty specification.

During the guarantee period, the Engineer monitors the completed work. If the Engineer finds work having a substantial defect, the Engineer lists work parts and furnishes you the list.

Within 10 days of receipt of the list, submit for authorization a detailed plan for correcting the work. Include a schedule that includes:

1. Start and completion dates
2. List of labor, equipment, materials, and any special services you plan to use
3. Work related to the corrective work, including traffic control and temporary and permanent pavement markings

The Engineer notifies you when the plan is authorized. Start corrective work and related work within 15 days of notice.

If the Engineer determines corrective work is urgently required to prevent injury or property damage:

1. The Engineer furnishes you a request to start emergency repair work and a list of parts requiring corrective work
2. Mobilize within 24 hours and start work
3. Submit a corrective work plan within 5 days of starting emergency repair work

If you fail to perform work as specified, the Department may perform the work and bill you.

SECTION 9 MEASUREMENT AND PAYMENT
(Issued 03-11-10)

9-1.03 FORCE ACCOUNT PAYMENT

9-1.03A General

For work paid by force account, the Engineer compares the Department's records to your daily force account work report. When you and the Engineer agree on the

contents of the daily force account work reports, the Engineer accepts the report and the Department pays for the work. If the records differ, the Department pays for the work based only on the information shown on the Department's records.

If a subcontractor performs work at force account, accept an additional 10 percent markup to the total cost of that work paid at force account, including markups specified in Section 9-1.03, as reimbursement for additional administrative costs.

The markups specified in labor, materials, and equipment include compensation for all delay costs, overhead costs, and profit.

If an item's payment is adjusted for work-character changes, the Department excludes your cost of determining the adjustment.

Payment for owner-operated labor and equipment is made at the market-priced invoice submitted.

9-1.03B Labor

Labor payment is full compensation for the cost of labor used in the direct performance of the work plus a 35 percent markup. Force account labor payment consists of:

1. Employer payment to the worker for:

    1.1. Basic hourly wage
    1.2. Health and welfare
    1.3. Pension
    1.4. Vacation
    1.5. Training
    1.6. Other State and federal recognized fringe benefit payments

2. Labor surcharge percentage in Labor Surcharge and Equipment Rental Rates current during the work paid at force account for:

    2.1. Workers' compensation insurance
    2.2. Social security
    2.3. Medicare
    2.4. Federal unemployment insurance
    2.5. State unemployment insurance
    2.6. State training taxes

3. Subsistence and travel allowances paid to the workers
4. Employer payment to supervisors, if authorized

The 35 percent markup consists of payment for all overhead costs related to labor but not designated as costs of labor used in the direct performance of the work including:

1. Home office overhead
2. Field office overhead
3. Bond costs
4. Profit

5. Labor liability insurance
6. Other fixed or administrative costs that are not costs of labor used in the direct performance of the work

9-1.03C Materials

Material payment is full compensation for materials you furnish and use in the work. The Engineer determines the cost based on the material purchase price, including delivery charges, except:

1. A 15 percent markup is added.
2. Supplier discounts are subtracted whether you took them or not.
3. If the Engineer believes the material purchase prices are excessive, the Department pays the lowest current wholesale price for a similar material quantity.
4. If you procured the materials from a source you wholly or partially own, the determined cost is based on the lower of the:

    4.1. Price paid by the purchaser for similar materials from that source on Contract items
    4.2. Current wholesale price for those materials

5. If you do not submit a material cost record within 30 days of billing, the determined cost is based on the lowest wholesale price:

    5.1. During that period
    5.2. In the quantities used

9-1.03D Equipment Rental

9-1.03D(1) General

Equipment rental payment is full compensation for:

1. Rental equipment costs, including moving rental equipment to and from the site of work performed by change order using its own power.
2. Transport equipment costs for rental equipment that cannot be transported economically using its own power. No payment is made during transport for the transported equipment.
3. 15 percent markup.

If you want to return the equipment to a location other than its original location, the payment to move the equipment must not exceed the cost of returning the equipment to its original location. If you use the equipment for work other than work paid by force account, the transportation cost is included in the other work.

Before moving or loading the equipment, obtain authorization for the equipment rental's original location.

The Engineer determines rental costs:

1. Using rates in Labor Surcharge and Equipment Rental Rates:

1.1. By classifying equipment using manufacturer's ratings and manufacturer-approved changes.
1.2. Current during the work paid by force account.
1.3. Regardless of equipment ownership; but the Department uses the rental document rates or minimum rental cost terms if:

1.3.1. Rented from equipment business you do not own.
1.3.2. The Labor Surcharge and Equipment Rental Rates hourly rate is $10.00 per hour or less.

2. Using rates established by the Engineer for equipment not listed in Labor Surcharge and Equipment Rental Rates. You may submit cost information that helps the Engineer establish the rental rate; but the Department uses the rental document rates or minimum rental cost terms if:

2.1. Rented from equipment business you do not own.
2.2. The Engineer establishes a rate of $10.00 per hour or less.

3. Using rates for transport equipment not exceeding the hourly rates charged by established haulers.

Equipment rental rates include the cost of:

1. Fuel
2. Oil
3. Lubrication
4. Supplies
5. Small tools that are not consumed by use
6. Necessary attachments
7. Repairs and maintenance
8. Depreciation
9. Storage
10. Insurance
11. Incidentals

The Department pays for small tools consumed by use. The Engineer determines payment for small tools consumed by use based on Contractor-submitted invoices.

9-1.03D(2) Equipment On the Job Site

For equipment on the job site at the time required to perform work paid by force account, the time paid is the time:

1. To move the equipment to the location of work paid by force account plus an equal amount of time to move the equipment to another location on the job site when the work paid by force account is completed
2. To load and unload equipment
3. Equipment is operated to perform work paid by force account and:

3.1. Hourly rates are paid in 1/2-hour increments
3.2 Daily rates are paid in 1/2-day increments

When rented equipment on the job site is used to perform work at force account not required by the original contract work, the Engineer may authorize rates in excess of those in Labor Surcharge and Equipment Rental Rates if:

1. You submit a request to use rented equipment
2. Equipment is not available from your owned equipment fleet or from your subcontractors
3. Rented equipment is from an independent rental company
4. Proposed equipment rental rate is reasonable
5. Engineer authorizes the equipment source and the rental rate before you use the equipment

The Department pays for fuel consumed during operation of rented equipment not included in the invoiced rental rate.

9-1.03D(3) Equipment Not On the Job Site Required for Original Contract Work

For equipment not on the job site at the time required to perform work paid by force account and required for original Contract work, the time paid is the time the equipment is operated to perform work paid by force account and the time to move the equipment to a location on the job site when the work paid by force account is completed.

The minimum total time paid is:

1. 1 day if daily rates are paid
2. 8 hours if hourly rates are paid

If daily rates are recorded, equipment:

1. Idled is paid as 1/2 day
2. Operated 4 hours or less is paid as 1/2 day
3. Operated 4 hours or more is paid as 1 day

If the minimum total time exceeds 8 hours and if hourly rates are listed, the Department rounds up hours operated to the nearest 1/2-hour increment and pays based on the following table. The table does not apply when equipment is not operated due to breakdowns; in which case rental hours are the hours the equipment was operated.

Equipment Rental Hours

Hours operated	Hours paid
0.0	4.00
0.5	4.25
1.0	4.50
1.5	4.75
2.0	5.00
2.5	5.25

3.0	5.50
3.5	5.75
4.0	6.00
4.5	6.25
5.0	6.50
5.5	6.75
6.0	7.00
6.5	7.25
7.0	7.5
7.5	7.75
≥8.0	hours used

9-1.03D(4) Equipment Not On the Job Site Not Required for Original Contract Work

For equipment not on the job site at the time required to perform work paid by force account and not required for original Contract work, the time paid is the time:

1. To move the equipment to the location of work paid by force account plus an equal amount of time to return the equipment to its source when the work paid by force account is completed
2. To load and unload equipment
3. Equipment is operated to perform work paid by force account

For this equipment, the Engineer may authorize rates in excess of those in Labor Surcharge and Equipment Rental Rates subject to the following:

1. Equipment is not available from your normal sources or from one of your subcontractors
2. Proposed equipment rental rate is reasonable
3. Engineer authorizes the equipment source and the rental rate before you use the equipment

9-1.03D(5) Non-Owner-Operated Dump Truck Rental

Submit the rental rate for non-owner-operated dump truck rental. The Engineer determines the payment rate. Payment for non-owner-operated dump truck rental is for the cost of renting a dump truck, including its driver. For the purpose of markup payment only, the non-owner-operated dump truck is rental equipment and the owner is a subcontractor.

SECTION 12 CONSTRUCTION AREA TRAFFIC CONTROL DEVICES
(Issued 11-07-08)

In Section 12-1.01 in the 2nd paragraph, replace the 1st sentence with:

Attention is directed to Part 6 of the California MUTCD.

Replace Section 12-2.01 with:

12-2.01 FLAGGERS

Flaggers while on duty and assigned to traffic control or to give warning to the public that the highway is under construction and of any dangerous conditions to be encountered as a result thereof, shall perform their duties and shall be provided with the necessary equipment in conformance with Part 6 of the California MUTCD. The equipment shall be furnished and kept clean and in good repair by the Contractor at the Contractor's expense.

All flaggers shall wear safety apparel meeting the requirements of ANSI/ISEA 107-2004 for Class 2 or 3 garment and complying with 71 Fed Reg 67792.

In Section 12-3.01 replace the 1st paragraph with:

In addition to the requirements in Part 6 of the California MUTCD, all devices used by the Contractor in the performance of the work shall conform to the provisions in this Section 12-3.

In Section 12-3.06 in the 1st paragraph, replace the 2nd sentence with:

Construction area signs are shown in or referred to in Part 6 of the California MUTCD.

In Section 12-3.06 in the 4th paragraph, replace the 1st sentence with:

All construction area signs shall conform to the dimensions, color and legend requirements of the plans, Part 6 of the California MUTCD and these specifications.

In Section 12-3.06 in the 8th paragraph, replace the 1st sentence with:

Used signs with the specified sheeting material will be considered satisfactory if they conform to the requirements for visibility and legibility and the colors conform to the requirements in Part 6 of the California MUTCD.

SECTION 14 (BLANK)
(Issued 06-05-09)

Replace Section 14 with:

SECTION 14 ENVIRONMENTAL STEWARDSHIP

14-1 GENERAL

14-1.01 GENERAL

Environmental stewardship includes both environmental compliance and environmental resource management.

If an ESA is shown on the plans:

1. The boundaries shown are approximate; the Department marks the exact boundaries on the ground
2. Do not enter the ESA unless authorized
3. If the ESA is breached, immediately:

3.1. Secure the area and stop all operations within 60 feet of the ESA boundary
3.2. Notify the Engineer

4. If the ESA is damaged, the Department determines what efforts are necessary to remedy the damage and who performs the remedy; you are responsible for remedies and charges.

14-2 CULTURAL RESOURCES

14-2.01 GENERAL

Reserved

14-2.02 ARCHAEOLOGICAL RESOURCES

If archaeological resources are discovered at the job site, do not disturb the resources and immediately:

1. Stop all work within a 60-foot radius of the discovery
2. Protect the discovery area
3. Notify the Engineer

The Department investigates. Do not take archaeological resources from the job site. Do not resume work within the discovery area until authorized.

If, in the opinion of the Engineer, completion of the work is delayed or interfered with by reason of an archaeological find, or investigation or recovery of archeological materials, you will be compensated for resulting losses, and an extension of time will be granted, in the same manner as provided for in Section 8-1.09, "Right of Way Delays."

If ordered, furnish resources to assist in the investigation or recovery of archaeological resources. This work will be paid for as extra work as specified in Section 4-1.03D, "Extra Work."

14-2.03 ARCHAEOLOGICAL MONITORING AREA

Section 14-2.03 applies if an AMA is described in the Contract.

The Department assigns an archaeological monitor to monitor job site activities within the AMA. Do not work within the AMA unless the archeological monitor is present.

The Engineer and the Department archaeological monitor conduct an AMA location field review with you at least 5 business days before start of work. The Department marks the exact boundaries of the AMA on the ground.

If temporary fence (Type ESA) for an AMA is described in the Contract, install temporary fence (Type ESA) to define the boundaries of the AMA during the AMA location field review.

At least 5 business days before starting work within an AMA, submit a schedule of days and hours to be worked for the Engineer's approval. If you require changes in the schedule, submit an update for the Engineer's approval at least 5 business days before any changed work day.

If archaeological resources are discovered within an AMA, comply with Section 14-2.02, "Archaeological Resources."

14-2.04 HISTORIC STRUCTURES

Reserved

14-3 COMMUNITY IMPACTS AND ENVIRONMENTAL JUSTICE

Reserved

14-4 NATIVE AMERICAN CONCERNS

Reserved

14-5 AESTHETICS

Reserved

14-6 BIOLOGICAL RESOURCES

14-6.01 GENERAL

Reserved

14-6.02 BIRD PROTECTION

Protect migratory and nongame birds, their occupied nests, and their eggs.

The Department anticipates nesting or attempted nesting from February 15 to September 1.

The federal Migratory Bird Treaty Act, 16 USC § 703–711, and 50 CFR Pt 10 and Fish & Game Code §§ 3503, 3513, and 3800 protect migratory and nongame birds, their occupied nests, and their eggs.

The federal Endangered Species Act of 1973, 16 USC §§ 1531 and 1543, and the California Endangered Species Act, Fish & Game Code §§ 2050–2115.5, prohibit the take of listed species and protect occupied and unoccupied nests of threatened and endangered bird species.

The Bald and Golden Eagle Protection Act, 16 USC § 668, prohibits the destruction of bald and golden eagles and their occupied and unoccupied nests.

If migratory or nongame bird nests are discovered that may be adversely affected by construction activities or an injured or killed bird is found, immediately:

1. Stop all work within a 100-foot radius of the discovery.
2. Notify the Engineer.

The Department investigates. Do not resume work within the specified radius of the discovery until authorized.

When ordered, use exclusion devices, take nesting prevention measures, remove and dispose of partially constructed and unoccupied nests of migratory or nongame birds on a regular basis to prevent their occupation, or perform any combination of these. This work will be paid for as extra work as specified in Section 4-1.03D, "Extra Work."

Prevent nest materials from falling into waterways.

Bird protection that causes a delay to the controlling activity is a condition unfavorable to the suitable prosecution of work as specified in Section 8-1.05, "Temporary Suspension of Work."

14-7 PALEONTOLOGICAL RESOURCES

If paleontological resources are discovered at the job site, do not disturb the material and immediately:

1. Stop all work within a 60-foot radius of the discovery
2. Protect the area
3. Notify the Engineer

The Department investigates and modifies the dimensions of the protected area if necessary. Do not take paleontological resources from the job site. Do not resume work within the specified radius of the discovery until authorized.

14-8 NOISE AND VIBRATION

14-8.01 GENERAL

Reserved

14-8.02 NOISE CONTROL

Do not exceed 86 dBa at 50 feet from the job site activities from 9 p.m. to 6 a.m.

Equip an internal combustion engine with the manufacturer-recommended muffler. Do not operate an internal combustion engine on the job site without the appropriate muffler.

14-9 AIR QUALITY

14-9.01 AIR POLLUTION CONTROL

Comply with air pollution control rules, regulations, ordinances, and statutes that apply to work performed under the Contract, including air pollution control rules, regulations, ordinances, and statutes provided in Govt Code § 11017 (Pub Cont Code § 10231).

Do not burn material to be disposed of.

14-9.02 DUST CONTROL

Prevent and alleviate dust by applying water, dust palliative, or both under Section 14-9.01.

Apply water under Section 17, "Watering."

Apply dust palliative under Section 18,"Dust Palliative."

If ordered, apply water, dust palliative, or both to control dust caused by public traffic. This work will be paid for as extra work as specified in Section 4-1.03D, "Extra Work."

14-10 SOLID WASTE DISPOSAL AND RECYCLING

14-10.01 SOLID WASTE DISPOSAL AND RECYCLING

Submit an annual Solid Waste Disposal and Recycling Report between January 1 and 15 for each year work is performed under the Contract at any time during the previous calendar year. Show the types and amounts of project-generated solid waste

taken to or diverted from landfills or reused on the project from January 1 through December 31 of the previous calendar year.

Submit a final annual Solid Waste Disposal and Recycling Report within 5 business days after Contract acceptance. Show the types and amounts of project-generated solid waste taken to or diverted from landfills or reused on the project from January 1 to Contract acceptance.

For each failure to submit a completed form, the Department withholds $10,000.

14-11 HAZARDOUS WASTE AND CONTAMINATION

14-11.01 GENERAL

Reserved

14-11.02 ASBESTOS AND HAZARDOUS SUBSTANCES

Upon discovery, immediately stop working in and notify the Engineer of areas where asbestos or a hazardous substance is present if the:

1. Contractor reasonably believes the substance is asbestos as defined in Labor Code § 6501.7 or a hazardous substance as defined in Health & Safety Code §§ 25316 and 25317
2. Presence is not described in the Contract
3. Substance has not been made harmless

14-12 OTHER INTERAGENCY RELATIONS

Reserved

14-13 PAYMENT

Payment for work specified in Section 14 is included in the payment for the bid items involved unless:

1. Bid item for the work is shown in the verified Bid Item List
2. Work is specified as paid for as extra work

SECTION 19 EARTHWORK

(Issued 11-21-08)

Replace Section 19-1.02 with:

19-1.02 (BLANK)

Replace Section 19-1.03 with:

19-1.03 GRADE TOLERANCE

Immediately prior to placing subsequent layers of material thereon, the grading plane shall conform to one of the following:

A. When hot mix asphalt is to be placed on the grading plane, the grading plane at any point shall not vary more than 0.05 foot above or below the grade established by the Engineer.
B. When subbase or base material to be placed on the grading plane is to be paid for by the ton, the grading plane at any point shall not vary more than 0.10 foot above or below the grade established by the Engineer.
C. When the material to be placed on the grading plane is to be paid for by the cubic yard, the grading plane at any point shall be not more than 0.05 foot above the grade established by the Engineer.

In Section 19-3.025C replace the 1st paragraph with:

Cementitious material used in soil cement bedding shall conform to the provisions in Section 90-2.01, "Cementitious Materials." Supplementary cementitious material will not be required.

In Section 19-3.025C replace the 4th paragraph with:

The aggregate, cementitious material, and water shall be proportioned either by weight or by volume. Soil cement bedding shall contain not less than 282 pounds of cementitious material per cubic yard. The water content shall be sufficient to produce a fluid, workable mix that will flow and can be pumped without segregation of the aggregate while being placed.

In Section 19-3.062 replace the 1st paragraph with:

Slurry cement backfill shall consist of a fluid, workable mixture of aggregate, cementitious material, and water.

In Section 19-3.062 replace the 5th paragraph with:

Cementitious material shall conform to the provisions in Section 90-2.01, "Cementitious Materials." Supplementary cementitious material will not be required.

In Section 19-3.062 replace the 8th paragraph with:

The aggregate, cementitious material, and water shall be proportioned either by weight or by volume. Slurry cement backfill shall contain not less than 188 pounds of cementitious material per cubic yard. The water content shall be sufficient to produce a fluid, workable mix that will flow and can be pumped without segregation of the aggregate while being placed.

SECTION 26 AGGREGATE BASES
(Issued 02-16-07)

In Section 26-1.02A replace the 1st paragraph with:

Aggregate must be clean and free from organic matter and other deleterious substances. Aggregate must consist of any combination of:

1. Broken stone
2. Crushed gravel
3. Natural rough surfaced gravel
4. Sand
5. Up to 100 percent of any combination of processed:

    5.1. Asphalt concrete
    5.2. Portland cement concrete
    5.3. Lean concrete base
    5.4. Cement treated base

In Section 26-1.02B replace the 1st paragraph with:

Aggregate must be clean and free from organic matter and other deleterious substances. Aggregate must consist of any combination of:

1. Broken stone
2. Crushed gravel
3. Natural rough surfaced gravel
4. Sand
5. Up to 100 percent of any combination of processed:

    5.1. Asphalt concrete
    5.2. Portland cement concrete
    5.3. Lean concrete base
    5.4. Cement treated base

SECTION 39 ASPHALT CONCRETE
(Issued 06-05-09)

Replace Section 39 with:
SECTION 39 HOT MIX ASPHALT

39-1 GENERAL

39-1.01 DESCRIPTION

Section 39 includes specifications for producing and placing hot mix asphalt (HMA) by mixing aggregate and asphalt binder at a mixing plant and spreading and compacting the HMA mixture.

The special provisions specify one or more type of HMA, including:

1. Type A
2. Type B

3. Open graded friction course (OGFC). OGFC includes hot mix asphalt (open graded), rubberized hot mix asphalt (open graded) (RHMA-O) and rubberized hot mix asphalt (open graded high binder) (RHMA-O-HB)
4. Rubberized hot mix asphalt (gap graded) (RHMA-G)

The special provisions specify the HMA construction process, including:

1. Standard
2. Method
3. Quality Control / Quality Assurance (QC / QA)

39-1.02 MATERIALS

39-1.02A Geosynthetic Pavement Interlayer

Geosynthetic pavement interlayer must comply with the specifications for pavement fabric or paving mat in Section 88-1.07, "Pavement Interlayer."

39-1.02B Tack Coat

Tack coat must comply with the specifications for asphaltic emulsion in Section 94, "Asphaltic Emulsion," or asphalt binder in Section 92, "Asphalts." Choose the type and grade.

Notify the Engineer if you dilute asphaltic emulsion with water. The weight ratio of added water to asphaltic emulsion must not exceed 1 to 1.

Measure added water either by weight or volume in compliance with the specifications for weighing, measuring, and metering devices under Section 9-1.01, "Measurement of Quantities," or you may use water meters from water districts, cities, or counties. If you measure water by volume, apply a conversion factor to determine the correct weight.

With each dilution, submit in writing:

1. The weight ratio of water to bituminous material in the original asphaltic emulsion
2. The weight of asphaltic emulsion before diluting
3. The weight of added water
4. The final dilution weight ratio of water to asphaltic emulsion

39-1.02C Asphalt Binder

Asphalt binder in HMA must comply with Section 92, "Asphalts," or Section 39-1.02D, "Asphalt Rubber Binder." The special provisions specify the grade.

Asphalt binder for geosynthetic pavement interlayer must comply with Section 92, "Asphalts." Choose from Grades PG 64-10, PG 64-16, or PG 70-10.

39-1.02D Asphalt Rubber Binder

General

Use asphalt rubber binder in RHMA-G, RHMA-O, and RHMA-O-HB. Asphalt rubber binder must be a combination of:

1. Asphalt binder

2. Asphalt modifier
3. Crumb rubber modifier (CRM)

The combined asphalt binder and asphalt modifier must be 80.0 ± 2.0 percent by weight of the asphalt rubber binder.

Asphalt Modifier

Asphalt modifier must be a resinous, high flash point, and aromatic hydrocarbon, and comply with:

Asphalt Modifier for Asphalt Rubber Binder

Quality Characteristic	ASTM	Specification
Viscosity, m^2/s (x 10^{-6}) at 100 °C	D 445	X ± 3 [a]
Flash Point, CL.O.C., °C	D 92	207 minimum
Molecular Analysis		
Asphaltenes, percent by mass	D 2007	0.1 maximum
Aromatics, percent by mass	D 2007	55 minimum

Note:
[a] The symbol "X" is the proposed asphalt modifier viscosity. "X" must be between 19 and 36. A change in "X" requires a new asphalt rubber binder design.

Asphalt modifier must be from 2.0 percent to 6.0 percent by weight of the asphalt binder in the asphalt rubber binder.

Crumb Rubber Modifier

CRM consists of a ground or granulated combination of scrap tire CRM and high natural CRM. CRM must be 75.0 ± 2.0 percent scrap tire CRM and 25.0 ± 2.0 percent high natural CRM by total weight of CRM. Scrap tire CRM must be from any combination of automobile tires, truck tires, or tire buffings.

Sample and test scrap tire CRM and high natural CRM separately. CRM must comply with:

Crumb Rubber Modifier for Asphalt Rubber Binder

Quality Characteristic	Test Method	Specification
Scrap tire CRM gradation (% passing No. 8 sieve)	LP-10	100
High natural CRM gradation (% passing No. 10 sieve)	LP-10	100
Wire in CRM (% max.)	LP-10	0.01
Fabric in CRM (% max.)	LP-10	0.05
CRM particle length (inch max.) [a]	--	3/16
CRM specific gravity [a]	CT 208	1.1 – 1.2
Natural rubber content in high natural CRM (%) [a]	ASTM D 297	40.0 – 48.0

Note:
[a] Test at mix design and for Certificate of Compliance.

Only use CRM ground and granulated at ambient temperature. If steel and fiber are cryogenically separated, it must occur before grinding and granulating. Only use cryogenically produced CRM particles that can be ground or granulated and not pass through the grinder or granulator.

CRM must be dry, free-flowing particles that do not stick together. CRM must not cause foaming when combined with the asphalt binder and asphalt modifier. You may add calcium carbonate or talc up to 3 percent by weight of CRM.

Asphalt Rubber Binder Design and Profile

Submit in writing an asphalt rubber binder design and profile that complies with the asphalt rubber binder specifications. In the design, designate the asphalt, asphalt modifier, and CRM and their proportions. The profile must include the same component sources for the asphalt rubber binder used.

Design the asphalt rubber binder from testing you perform for each quality characteristic and for the reaction temperatures expected during production. The 24-hour (1,440-minute) interaction period determines the design profile. At a minimum, mix asphalt rubber binder components, take samples, and perform and record the following tests:

Asphalt Rubber Binder Reaction Design Profile

Test	Minutes of Reaction [a]							Limits
	45	60	90	120	240	360	1440	
Cone penetration @ 77 °F, 0.10-mm (ASTM D 217)	X[b]				X		X	25 - 70
Resilience @ 77 °F, percent rebound (ASTM D 5329)	X				X		X	18 min.
Field softening point, °F (ASTM D 36)	X				X		X	125 - 165
Viscosity, centipoises (LP-11)	X	X	X	X	X	X	X	1,500 - 4,000

Notes:

[a] Six hours (360 minutes) after CRM addition, reduce the oven temperature to 275 °F for a period of 16 hours. After the 16-hour (1320 minutes) cool-down after CRM addition, reheat the binder to the reaction temperature expected during production for sampling and testing at 24 hours (1440 minutes).

[b] "X" denotes required testing

Asphalt Rubber Binder

After interacting for a minimum of 45 minutes, asphalt rubber binder must comply with:

Asphalt Rubber Binder

Quality Characteristic	Test for Quality Control or Acceptance	Test Method	Specification	
			Minimum	Maximum
Cone penetration @ 77 °F, 0.10-mm	Acceptance	ASTM D 217	25	70
Resilience @ 77 °F, percent rebound	Acceptance	ASTM D 5329	18	--
Field softening point, °F	Acceptance	ASTM D 36	125	165
Viscosity @ 375 °F, centipoises	Quality Control	LP-11	1,500	4,000

39-1.02E Aggregate

Aggregate must be clean and free from deleterious substances. Aggregate:

1. Retained on the No. 4 sieve is coarse
2. Passing the No. 4 sieve is fine
3. Added and passing the No. 30 sieve is supplemental fine, including:

    3.1. Hydrated lime
    3.2. Portland cement
    3.3. Fines from dust collectors

The special provisions specify the aggregate gradation for each HMA type.

The specified aggregate gradation is before the addition of asphalt binder and includes supplemental fines. The Engineer tests for aggregate grading under California Test 202, modified by California Test 105 if there is a difference in specific gravity of 0.2 or more between the coarse and fine parts of different aggregate blends.

Choose a sieve size target value (TV) within each target value limit presented in the aggregate gradation tables.

Aggregate Gradation
(Percentage Passing)
HMA Types A and B

3/4–inch HMA Types A and B

Sieve Sizes	Target Value Limits	Allowable Tolerance
1"	100	—
3/4"	90 - 100	TV ±5
1/2"	70 - 90	TV ±6
No. 4	45 - 55	TV ±7
No. 8	32 - 40	TV ±5
No. 30	12 - 21	TV ±4
No. 200	2 - 7	TV ±2

1/2–inch HMA Types A and B

Sieve Sizes	Target Value Limits	Allowable Tolerance
3/4"	100	—
1/2"	95 - 99	TV ±6
3/8"	75 - 95	TV ±6
No. 4	55 - 66	TV ±7
No. 8	38 - 49	TV ±5
No. 30	15 - 27	TV ±4
No. 200	2 - 8	TV ±2

3/8–inch HMA Types A and B

Sieve Sizes	Target Value Limits	Allowable Tolerance
1/2"	100	—
3/8"	95 - 100	TV ±6
No. 4	58 - 72	TV ±7
No. 8	34 - 48	TV ±6
No. 30	18 - 32	TV ±5
No. 200	2 - 9	TV ±2

No. 4 HMA Types A and B

Sieve Sizes	Target Value Limits	Allowable Tolerance
3/8"	100	—
No. 4	95 - 100	TV ±7
No. 8	72 - 77	TV ±7
No. 30	37 - 43	TV ±7
No. 200	2 - 12	TV ±4

Rubberized Hot Mix Asphalt - Gap Graded (RHMA-G)

3/4–inch RHMA-G

Sieve Sizes	Target Value Limits	Allowable Tolerance
1"	100	—
3/4"	95 - 100	TV ±5
1/2"	83 - 87	TV ±6
3/8"	65 - 70	TV ±6
No. 4	28 - 42	TV ±7
No. 8	14 - 22	TV ±5
No. 200	0 - 6	TV ±2

1/2–inch RHMA-G

Sieve Sizes	Target Value Limits	Allowable Tolerance
3/4"	100	—
1/2"	90 - 100	TV ±6
3/8"	83 - 87	TV ±6
No. 4	28 - 42	TV ±7
No. 8	14 - 22	TV ±5
No. 200	0 - 6	TV ±2

Open Graded Friction Course (OGFC)

1–inch OGFC

Sieve Sizes	Target Value Limits	Allowable Tolerance
1 1/2"	100	—
1"	99 - 100	TV ±5
3/4"	85 - 96	TV ±5
1/2"	55 - 71	TV ±6
No. 4	10 - 25	TV ±7
No. 8	6 - 16	TV ±5
No. 200	1 - 6	TV ±2

1/2–inch OGFC

Sieve Sizes	Target Value Limits	Allowable Tolerance
3/4"	100	—
1/2"	95 - 100	TV ±6
3/8"	78 - 89	TV ±6
No. 4	28 - 37	TV ±7
No. 8	7 - 18	TV ±5
No. 30	0 - 10	TV ±4
No. 200	0 - 3	TV ±2

3/8–inch OGFC

Sieve Sizes	Target Value Limits	Allowable Tolerance
1/2"	100	—
3/8"	90 - 100	TV ±6
No. 4	29 - 36	TV ±7
No. 8	7 - 18	TV ±6
No. 30	0 - 10	TV ±5
No. 200	0 - 3	TV ±2

Before the addition of asphalt binder and lime treatment, aggregate must comply with:

Aggregate Quality

Quality Characteristic	Test Method	HMA Type			
		A	B	RHMA-G	OGFC
Percent of crushed particles	CT 205				
Coarse aggregate (% min.)					
One fractured face		90	25	--	90
Two fractured faces		75	--	90	75
Fine aggregate (% min) (Passing No. 4 sieve and retained on No. 8 sieve.)					
One fractured face		70	20	70	90
Los Angeles Rattler (% max.)	CT 211				
Loss at 100 Rev.		12	--	12	12
Loss at 500 Rev.		45	50	40	40
Sand equivalent (min.) [a]	CT 217	47	42	47	--
Fine aggregate angularity (% min.) [b]	AASHTO T 304 Method A	45	45	45	--
Flat and elongated particles (% max. by weight @ 5:1)	ASTM D 4791	10	10	10	10

Notes:

[a] Reported value must be the average of 3 tests from a single sample.

[b] The Engineer waives this specification if HMA contains less than 10 percent of nonmanufactured sand by weight of total aggregate. Manufactured sand is fine aggregate produced by crushing rock or gravel.

39-1.02F Reclaimed Asphalt Pavement

You may produce HMA using reclaimed asphalt pavement (RAP). HMA produced using RAP must comply with the specifications for HMA except aggregate quality specifications do not apply to RAP. You may substitute RAP aggregate for a part of the virgin aggregate in HMA in a quantity not exceeding 15.0 percent of the aggregate blend. Do not use RAP in OGFC and RHMA-G.

Assign the substitution rate of RAP aggregate for virgin aggregate with the job mix formula (JMF) submittal. The JMF must include the percent of RAP used. If you change your assigned RAP aggregate substitution rate by more than 5 percent (within the 15.0 percent limit), submit a new JMF.

Process RAP from asphalt concrete. You may process and stockpile RAP throughout the project's life. Prevent material contamination and segregation. Store RAP in stockpiles on smooth surfaces free of debris and organic material. Processed RAP stockpiles must consist only of homogeneous RAP.

39-1.03 HOT MIX ASPHALT MIX DESIGN REQUIREMENTS

39-1.03A General

A mix design consists of performing California Test 367 and laboratory procedures on combinations of aggregate gradations and asphalt binder contents to determine the optimum binder content (OBC) and HMA mixture qualities. If RAP is used, use Laboratory Procedure LP-9. The result of the mix design becomes the proposed JMF.

Use Form CEM-3512 to document aggregate quality and mix design data. Use Form CEM-3511 to present the JMF.

Laboratories testing aggregate qualities and preparing the mix design and JMF must be qualified under the Department's Independent Assurance Program. Take samples under California Test 125.

The Engineer reviews the aggregate qualities, mix design, and JMF and verifies and accepts the JMF.

You may change the JMF during production. Do not use the changed JMF until the Engineer accepts it. Except when adjusting the JMF in compliance with Section 39-1.03E, "Job Mix Formula Verification," perform a new mix design and submit in writing a new JMF submittal for changing any of the following:

1. Target asphalt binder percentage
2. Asphalt binder supplier
3. Asphalt rubber binder supplier
4. Component materials used in asphalt rubber binder or percentage of any component materials
5. Combined aggregate gradation
6. Aggregate sources
7. Substitution rate for RAP aggregate of more than 5 percent
8. Any material in the JMF

For OGFC, submit in writing a complete JMF submittal except asphalt binder content. The Engineer determines the asphalt binder content under California Test 368 within 20 days of your complete JMF submittal and provides you a Form CEM-3513.

39-1.03B Hot Mix Asphalt Mix Design

Perform a mix design that produces HMA in compliance with:

Hot Mix Asphalt Mix Design Requirements

Quality Characteristic	Test Method	HMA Type		
		A	B	RHMA-G
Air voids content (%)	CT 367[a]	4.0	4.0	Special Provisions
Voids in mineral aggregate (% min.)	LP-2			
No. 4 grading		17.0	17.0	--
3/8" grading		15.0	15.0	--
1/2" grading		14.0	14.0	18.0 – 23.0[b]
3/4" grading		13.0	13.0	18.0 – 23.0[b]
Voids filled with asphalt (%)	LP-3			
No. 4 grading		76.0 – 80.0	76.0 – 80.0	Note d
3/8" grading		73.0 – 76.0	73.0 – 76.0	
1/2" grading		65.0 – 75.0	65.0 – 75.0	
3/4" grading		65.0 – 75.0	65.0 – 75.0	
Dust proportion	LP-4			
No. 4 and 3/8" gradings		0.9 – 2.0	0.9 – 2.0	Note d
1/2" and 3/4" gradings		0.6 – 1.3	0.6 – 1.3	
Stabilometer value (min.) [c]	CT 366			
No. 4 and 3/8" gradings		30	30	--
1/2" and 3/4" gradings		37	35	23

Notes:

[a] Calculate the air voids content of each specimen using California Test 309 and Lab Procedure LP-1. Modify California Test 367, Paragraph C5, to use the exact air voids content specified in the selection of OBC.
[b] Voids in mineral aggregate for RHMA-G must be within this range.
[c] Modify California Test 304, Part 2.B.2.c: "After compaction in the compactor, cool to 140 °± 5 °F by allowing the briquettes to cool at room temperature for 0.5-hour, then place the briquettes in the oven at 140 °F for a minimum of 2 hours and not more than 3 hours."
[d] Report this value in the JMF submittal.

For stability and air voids content, prepare 3 briquettes at the OBC and test for compliance. Report the average of 3 tests. Prepare new briquettes and test if the range of stability for the 3 briquettes is more than 8 points. The average air void content may vary from the specified air void content by ±0.5 percent.

You may use the briquettes used for stability testing to determine bulk specific gravity under CT 308. If you use the same briquettes and tests using bulk specific gravity fail, you may prepare 3 new briquettes and determine a new bulk specific gravity.

39-1.03C Job Mix Formula Submittal

Each JMF submittal must consist of:

1. Proposed JMF on Form CEM-3511
2. Mix design documentation on Form CEM-3512 dated within 12 months of submittal
3. JMF verification on Form CEM-3513, if applicable
4. JMF renewal on Form CEM-3514, if applicable
5. Materials Safety Data Sheets (MSDS) for:

    5.1. Asphalt binder
    5.2. Base asphalt binder used in asphalt rubber binder
    5.3. CRM and asphalt modifier used in asphalt rubber binder

5.4. Blended asphalt rubber binder mixture
5.5. Supplemental fine aggregate except fines from dust collectors
5.6. Antistrip additives

If the Engineer requests in writing, sample the following materials in the presence of the Engineer and place in labeled containers weighing no more than 50 pounds each:

1. Coarse, fine, and supplemental fine aggregate from stockpiles, cold feed belts, or hot bins. Samples must include at least 120 pounds for each coarse aggregate, 80 pounds for each fine aggregate, and 10 pounds for each type of supplemental fines. The Department combines these aggregate samples to comply with the JMF target values submitted on Form CEM-3511.
2. RAP from stockpiles or RAP system. Samples must be at least 60 pounds.
3. Asphalt binder from the binder supplier. Samples must be in two 1-quart cylindrical shaped cans with open top and friction lids.
4. Asphalt rubber binder with the components blended in the proportions to be used. Samples must be in four 1-quart cylindrical shaped cans with open top and friction lids.

Notify the Engineer in writing at least 2 business days before sampling materials. For aggregate and RAP, split the samples into at least 4 parts. Submit 3 parts to the Engineer and use 1 part for your testing.

39-1.03D Job Mix Formula Review

The Engineer reviews each mix design and proposed JMF within 5 business days from the complete JMF submittal. The review consists of reviewing the mix design procedures and comparing the proposed JMF with the specifications.

The Engineer may verify aggregate qualities during this review period.

39-1.03E Job Mix Formula Verification

If you cannot submit a Department-verified JMF on Form CEM-3513 dated within 12 months before HMA production, the Engineer verifies the JMF.

Based on your testing and production experience, you may submit on Form CEM-3511 an adjusted JMF before the Engineer's verification testing. JMF adjustments may include a change in the:

1. Asphalt binder content target value up to ±0.6 percent from the optimum binder content value submitted on Form CEM-3512 except do not adjust the target value for asphalt rubber binder for RHMA-G below 7.0 percent
2. Aggregate gradation target values within the target value limits specified in the aggregate gradation tables

For HMA Type A, Type B, and RHMA-G, the Engineer verifies the JMF from samples taken from HMA produced by the plant to be used. Notify the Engineer in writing at least 2 business days before sampling materials.

In the Engineer's presence and from the same production run, take samples of:

1. Aggregate
2. Asphalt binder
3. RAP
4. HMA

Sample aggregate from cold feed belts or hot bins. Sample RAP from the RAP system. Sample HMA under California Test 125 except if you request in writing and the Engineer approves, you may sample from any of the following locations:

1. The plant
2. A truck
3. A windrow
4. The paver hopper
5. The mat behind the paver

You may sample from a different project including a non-Department project if you make arrangements for the Engineer to be present during sampling.

For aggregate, RAP, and HMA, split the samples into at least 4 parts and label their containers. Submit 3 split parts to the Engineer and use 1 part for your testing.

The Engineer verifies each proposed JMF within 20 days of receiving verification samples. If you request in writing, the Engineer verifies RHMA-G quality requirements within 3 business days of sampling. Verification is testing for compliance with the specifications for:

1. Aggregate quality
2. Aggregate gradation (JMF TV ± tolerance)
3. Asphalt binder content (JMF TV ± tolerance)
4. HMA quality specified in the table Hot Mix Asphalt Mix Design Requirements except:

    4.1. Air voids content (design value ± 2.0 percent)
    4.2. Voids filled with asphalt (report only if an adjustment for asphalt binder content target value is less than or equal to ± 0.3 percent from OBC)
    4.3. Dust proportion (report only if an adjustment for asphalt binder content target value is less than or equal to ± 0.3 percent from OBC)

The Engineer prepares 3 briquettes from a single split sample. To verify the JMF for stability and air voids content, the Engineer tests the 3 briquettes and reports the average of 3 tests. The Engineer prepares new briquettes if the range of stability for the 3 briquettes is more than 8 points.

The Engineer may use the briquettes used for stability testing to determine bulk specific gravity under CT 308. If the Engineer uses the same briquettes and the tests using bulk specific gravity fail, the Engineer prepares 3 new briquettes and determines a new bulk specific gravity.

If the Engineer verifies the JMF, the Engineer provides you a Form CEM-3513.

If the Engineer's tests on plant-produced samples do not verify the JMF, the Engineer notifies you in writing and you must submit a new JMF submittal or submit an adjusted JMF based on your testing. JMF adjustments may include a change in the:

1. Asphalt binder content target value up to ±0.6 percent from the optimum binder content value submitted on Form CEM-3512 except do not adjust the target value for asphalt rubber binder for RHMA-G below 7.0 percent
2. Aggregate gradation target values within the target value limits specified in the aggregate gradation tables

You may adjust the JMF only once due to a failed verification test. An adjusted JMF requires a new Form CEM-3511 and verification of a plant-produced sample.

The Engineer reverifies the JMF if HMA production has stopped for longer than 30 days and the verified JMF is older than 12 months.

For each HMA type and aggregate size specified, the Engineer verifies at the State's expense up to 2 proposed JMF including a JMF adjusted after verification failure. The Engineer deducts $3,000 from payments for each verification exceeding this limit. This deduction does not apply to verifications initiated by the Engineer or if a JMF expires while HMA production is stopped longer than 30 days.

39-1.03F Job Mix Formula Renewal

You may request a JMF renewal by submitting the following:

1. Proposed JMF on Form CEM-3511
2. A previously verified JMF documented on Form CEM-3513 dated within 12 months
3. Mix design documentation on Form CEM-3512 used for the previously verified JMF

If the Engineer requests in writing, sample the following materials in the presence of the Engineer and place in labeled containers weighing no more than 50 pounds each:

1. Coarse, fine, and supplemental fine aggregate from stockpiles, cold feed belts, or hot bins. Samples must include at least 120 pounds for each coarse aggregate, 80 pounds for each fine aggregate, and 10 pounds for each type of supplemental fines. The Department combines these aggregate samples to comply with the JMF target values submitted on Form CEM-3511.
2. RAP from stockpiles or RAP system. Samples must be at least 60 pounds.
3. Asphalt binder from the binder supplier. Samples must be in two 1-quart cylindrical shaped cans with open top and friction lids.
4. Asphalt rubber binder with the components blended in the proportions to be used. Samples must be in four 1-quart cylindrical shaped cans with open top and friction lids.

Notify the Engineer in writing at least 2 business days before sampling materials. For aggregate and RAP, split samples into at least 4 parts. Submit 3 parts to the Engineer and use 1 part for your testing.

The Engineer reviews each complete JMF renewal submittal within 5 business days.

The Engineer may verify aggregate qualities during this review period.

Notify the Engineer in writing at least 2 business days before sampling materials. For aggregate, RAP, and HMA, split the samples into at least 4 parts. Submit 3 parts to the Engineer and use 1 part for your testing.

The Engineer verifies the JMF renewal submittal under Section 39-1.03E, "Job Mix Formula Verification," except:

1. The Engineer retains samples until you provide test results for your part on Form CEM-3514.
2. The Engineer tests samples of materials obtained from the HMA production unit after you submit test results that comply with the specifications for the quality characteristics under Section 39-1.03E, "Job Mix Formula Verification."
3. The Engineer verifies each proposed JMF within 30 days of receiving verification samples.
4. You may not adjust the JMF due to a failed verification.
5. For each HMA type and aggregate gradation specified, the Engineer verifies at the State's expense 1 proposed JMF.

If the Engineer verifies the JMF renewal, the Engineer provides you a Form CEM-3513.

39-1.03G Job Mix Formula Acceptance

You may start HMA production if:

1. The Engineer's review of the JMF shows compliance with the specifications.
2. The Department has verified the JMF within 12 months before HMA production.
3. The Engineer accepts the verified JMF.

39-1.04 CONTRACTOR QUALITY CONTROL

39-1.04A General

Establish, maintain, and change a quality control system to ensure materials and work comply with the specifications. Submit quality control test results to the Engineer within 3 days of a request except when QC / QA is specified.

You must identify the HMA sampling location in your Quality Control Plan. During production, take samples under California Test 125 except if you request in writing and the Engineer approves, you may sample HMA from:

1. The plant
2. The truck
3. A windrow
4. The paver hopper
5. The mat behind the paver

39-1.04B Prepaving Conference

Meet with the Engineer at a prepaving conference at a mutually agreed time and place. Discuss methods of performing the production and paving work.

39-1.04C Asphalt Rubber Binder

Take asphalt rubber binder samples from the feed line connecting the asphalt rubber binder tank to the HMA plant. Sample and test asphalt rubber binder under Laboratory Procedure LP-11.

Test asphalt rubber binder for compliance with the viscosity specifications in Section 39-1.02, "Materials." During asphalt rubber binder production and HMA production using asphalt rubber binder, measure viscosity every hour with not less than 1 reading for each asphalt rubber binder batch. Log measurements with corresponding time and asphalt rubber binder temperature. Submit the log daily in writing.

Submit a Certificate of Compliance under Section 6-1.07, "Certificates of Compliance." With the Certificate of Compliance, submit test results in writing for CRM and asphalt modifier with each truckload delivered to the HMA plant. A Certificate of Compliance for asphalt modifier must not represent more than 5,000 pounds. Use an AASHTO-certified laboratory for testing.

Sample and test gradation and wire and fabric content of CRM once per 10,000 pounds of scrap tire CRM and once per 3,400 pounds of high natural CRM. Sample and test scrap tire CRM and high natural CRM separately.

Submit certified weight slips in writing for the CRM and asphalt modifier furnished.

39-1.04D Aggregate

Determine the aggregate moisture content and RAP moisture content in continuous mixing plants at least twice a day during production and adjust the plant controller. Determine the RAP moisture content in batch mixing plants at least twice a day during production and adjust the plant controller.

39-1.04E Reclaimed Asphalt Pavement

Perform RAP quality control testing each day.

Sample RAP once daily and determine the RAP aggregate gradation under Laboratory Procedure LP-9 and submit the results to the Engineer in writing with the combined aggregate gradation.

39-1.04F Density Cores

To determine density for Standard and QC / QA projects, take 4-inch or 6-inch diameter density cores at least once every 5 business days. Take 1 density core for every 250 tons of HMA from random locations the Engineer designates. Take density cores in the Engineer's presence and backfill and compact holes with material authorized by the Engineer. Before submitting a density core to the Engineer, mark it with the density core's location and place it in a protective container.

If a density core is damaged, replace it with a density core taken within 1 foot longitudinally from the original density core. Relocate any density core located within 1 foot of a rumble strip to 1 foot transversely away from the rumble strip.

39-1.04G Briquettes

Prepare 3 briquettes for each stability and air voids content determination. Report the average of 3 tests. Prepare new briquettes and test if the range of stability for the 3 briquettes is more than 12 points.

You may use the briquettes used for stability testing to determine bulk specific gravity under CT 308. If you use these briquettes and tests using bulk specific gravity fail, you may prepare 3 new briquettes and determine a new bulk specific gravity.

39-1.05 ENGINEER'S ACCEPTANCE

The Engineer's acceptance of HMA is specified in the sections for each HMA construction process.

The Engineer samples materials for testing under California Test 125 and the applicable test method except samples may be taken from:

1. The plant from:

    1.1. A truck
    1.2. An automatic sampling device

2. The mat behind the paver

Sampling must be independent of Contractor quality control, statistically-based, and random.

If you request, the Engineer splits samples and provides you with a part.

The Engineer accepts HMA based on:

1. Accepted JMF
2. Accepted QCP for Standard and QC / QA
3. Compliance with the HMA Acceptance tables
4. Acceptance of a lot for QC / QA
5. Visual inspection

The Engineer prepares 3 briquettes for each stability and air voids content determination. The Engineer reports the average of 3 tests. The Engineer prepares new briquettes and test if the range of stability for the 3 briquettes is more than 8 points.

The Engineer may use the briquettes used for stability testing to determine bulk specific gravity under CT 308. If the Engineer uses the same briquettes and the tests using bulk specific gravity fail, the Engineer prepares 3 new briquettes and determines a new bulk specific gravity.

39-1.06 DISPUTE RESOLUTION

You and the Engineer must work together to avoid potential conflicts and to resolve disputes regarding test result discrepancies. Notify the Engineer in writing within 5 days of receiving a test result if you dispute the test result.

If you or the Engineer dispute each other's test results, submit written quality control test results and copies of paperwork including worksheets used to determine the disputed test results to the Engineer. An Independent Third Party (ITP) performs referee testing. Before the ITP participates in a dispute resolution, the ITP must be accredited under the Department's Independent Assurance Program. The ITP must be independent of the project. By mutual agreement, the ITP is chosen from:

1. A Department laboratory
2. A Department laboratory in a district or region not in the district or region the project is located
3. The Transportation Laboratory
4. A laboratory not currently employed by you or your HMA producer

If split quality control or acceptance samples are not available, the ITP uses any available material representing the disputed HMA for evaluation.

39-1.07 PRODUCTION START-UP EVALUATION

The Engineer evaluates HMA production and placement at production start-up.

Within the first 750 tons produced on the first day of HMA production, in the Engineer's presence and from the same production run, take samples of:

1. Aggregate
2. Asphalt binder
3. RAP
4. HMA

Sample aggregate from cold feed belts or hot bins. Take RAP samples from the RAP system. Sample HMA under California Test 125 except if you request in writing and the Engineer approves, you may sample HMA from:

1. The plant
2. The truck
3. A windrow
4. The paver hopper
5. The mat behind the paver

For aggregate, RAP, and HMA, split the samples into at least 4 parts and label their containers. Submit 3 split parts to the Engineer and keep 1 part.

For Standard and QC / QA projects, you and the Engineer must test the split samples and report test results in writing within 3 business days of sampling. If you proceed before receipt of the test results, the Engineer may consider the HMA placed to be represented by these test results.

For Standard and QC / QA projects, take 4-inch or 6-inch diameter density cores within the first 750 tons on the first day of HMA production. For each density core, the Engineer reports the bulk specific gravity determined under California Test 308, Method A in addition to the percent of maximum theoretical density. You may test for in-place density at the density core locations and include them in your production tests for percent of maximum theoretical density.

39-1.08 PRODUCTION

39-1.08A General

Produce HMA in a batch mixing plant or a continuous mixing plant. Proportion aggregate by hot or cold feed control.

HMA plants must be Department-qualified. Before production, the HMA plant must have a current qualification under the Department's Materials Plant Quality Program.

During production, you may adjust:

1. Hot or cold feed proportion controls for virgin aggregate and RAP
2. The set point for asphalt binder content

39-1.08B Mixing

Mix HMA ingredients into a homogeneous mixture of coated aggregates.

Asphalt binder must be between 275 °F and 375 °F when mixed with aggregate.

Asphalt rubber binder must be between 375 °F and 425 °F when mixed with aggregate.

When mixed with asphalt binder, aggregate must not be more than 325 °F except aggregate for OGFC with unmodified asphalt binder must be not more than 275 °F. Aggregate temperature specifications do not apply when you use RAP.

HMA with or without RAP must not be more than 325 °F.

39-1.08C Asphalt Rubber Binder

Deliver scrap tire CRM and high natural CRM in separate bags.

Either proportion and mix asphalt binder, asphalt modifier, and CRM simultaneously or premix the asphalt binder and asphalt modifier before adding CRM. If you premix asphalt binder and asphalt modifier, mix them for at least 20 minutes. When you add CRM, the asphalt binder and asphalt modifier must be between 375 °F and 440 °F.

Do not use asphalt rubber binder during the first 45 minutes of the reaction period. During this period, the asphalt rubber binder mixture must be between 350 °F and the lower of 425 °F or 25 °F below the asphalt binder's flash point indicated in the MSDS.

If any asphalt rubber binder is not used within 4 hours after the reaction period, discontinue heating. If the asphalt rubber binder drops below 375 °F, reheat before use. If you add more scrap tire CRM to the reheated asphalt rubber binder, the binder must undergo a 45-minute reaction period. The added scrap tire CRM must not exceed 10 percent of the total asphalt rubber binder weight. Reheated and reacted asphalt rubber binder must comply with the viscosity specifications for asphalt rubber binder in Section 39-1.02, "Materials." Do not reheat asphalt rubber binder more than twice.

39-1.09 SUBGRADE, TACK COAT, AND GEOSYNTHETIC PAVEMENT INTERLAYER

39-1.09A General

Prepare subgrade or apply tack coat to surfaces receiving HMA. If specified, place geosynthetic pavement interlayer over a coat of asphalt binder.

39-1.09B Subgrade

Subgrade to receive HMA must comply with the compaction and elevation tolerance specifications in the sections for the material involved. Subgrade must be free of loose and extraneous material. If HMA is paved on existing base or pavement, remove loose paving particles, dirt, and other extraneous material by any means including flushing and sweeping.

39-1.09C Tack Coat

Apply tack coat:

1. To existing pavement including planed surfaces
2. Between HMA layers
3. To vertical surfaces of:

    3.1. Curbs
    3.2. Gutters
    3.3. Construction joints

Before placing HMA, apply tack coat in 1 application at the minimum residual rate specified for the condition of the underlying surface:

Tack Coat Application Rates for HMA Type A, Type B, and RHMA-G

HMA over:	Minimum Residual Rates (gallons per square yard)		
	CSS1/CSS1h, SS1/SS1h and QS1h/CQS1h Asphaltic Emulsion	CRS1/CRS2, RS1/RS2 and QS1/CQS1 Asphaltic Emulsion	Asphalt Binder and PMRS2/PMCRS2 and PMRS2h/PMCRS2h Asphaltic Emulsion
New HMA (between layers)	0.02	0.03	0.02
Existing AC and PCC pavement	0.03	0.04	0.03
Planed pavement	0.05	0.06	0.04

Tack Coat Application Rates for OGFC

OGFC over:	Minimum Residual Rates (gallons per square yard)		
	CSS1/CSS1h, SS1/SS1h and QS1h/CQS1h Asphaltic Emulsion	CRS1/CRS2, RS1/RS2 and QS1/CQS1 Asphaltic Emulsion	Asphalt Binder and PMRS2/PMCRS2 and PMRS2h/PMCRS2h Asphaltic Emulsion
New HMA	0.03	0.04	0.03
Existing AC and PCC pavement	0.05	0.06	0.04
Planed pavement	0.06	0.07	0.05

If you dilute asphaltic emulsion, mix until homogeneous before application.

Apply to vertical surfaces with a residual tack coat rate that will thoroughly coat the vertical face without running off.

If you request in writing and the Engineer authorizes, you may:

1. Change tack coat rates
2. Omit tack coat between layers of new HMA during the same work shift if:

    2.1. No dust, dirt, or extraneous material is present
    2.2. The surface is at least 140 °F

Immediately in advance of placing HMA, apply additional tack coat to damaged areas or where loose or extraneous material is removed.

Close areas receiving tack coat to traffic. Do not track tack coat onto pavement surfaces beyond the job site.

Asphalt binder tack coat must be between 285 °F and 350 °F when applied.

39-1.09D Geosynthetic Pavement Interlayer

Place geosynthetic pavement interlayer in compliance with the manufacturer's recommendations.

Before placing the geosynthetic pavement interlayer and asphalt binder:

1. Repair cracks 1/4 inch and wider, spalls, and holes in the pavement. The State pays for this repair work under Section 4-1.03D, "Extra Work."
2. Clean the pavement of loose and extraneous material.

Immediately before placing the interlayer, apply 0.25 gallon ± 0.03 gallon of asphalt binder per square yard of interlayer or until the fabric is saturated. Apply asphalt binder the width of the geosynthetic pavement interlayer plus 3 inches on each side. At interlayer overlaps, apply asphalt binder on the lower interlayer the same overlap distance as the upper interlayer.

Align and place the interlayer with no overlapping wrinkles, except a wrinkle that overlaps may remain if it is less than 1/2 inch thick. If the overlapping wrinkle is more than 1/2 inch thick, cut the wrinkle out and overlap the interlayer no more than 2 inches.

The minimum HMA thickness over the interlayer must be 0.12 foot thick including conform tapers. Do not place the interlayer on a wet or frozen surface.

Overlap the interlayer borders between 2 inches and 4 inches. In the direction of paving, overlap the following roll with the preceding roll at any break.

You may use rolling equipment to correct distortions or wrinkles in the interlayer.

If asphalt binder tracked onto the interlayer or brought to the surface by construction equipment causes interlayer displacement, cover it with a small quantity of HMA.

Before placing HMA on the interlayer, do not expose the interlayer to:

1. Traffic except for crossings under traffic control and only after you place a small HMA quantity
2. Sharp turns from construction equipment
3. Damaging elements

Pave HMA on the interlayer during the same work shift.

39-1.10 SPREADING AND COMPACTING EQUIPMENT

Paving equipment for spreading must be:

1. Self-propelled
2. Mechanical
3. Equipped with a screed or strike-off assembly that can distribute HMA the full width of a traffic lane
4. Equipped with a full-width compacting device
5. Equipped with automatic screed controls and sensing devices that control the thickness, longitudinal grade, and transverse screed slope

Install and maintain grade and slope references.

The screed must produce a uniform HMA surface texture without tearing, shoving, or gouging.

The paver must not leave marks such as ridges and indentations unless you can eliminate them by rolling.

Rollers must be equipped with a system that prevents HMA from sticking to the wheels. You may use a parting agent that does not damage the HMA or impede the bonding of layers.

In areas inaccessible to spreading and compacting equipment:

1. Spread the HMA by any means to obtain the specified lines, grades and cross sections.
2. Use a pneumatic tamper, plate compactor, or equivalent to achieve thorough compaction.

39-1.11 TRANSPORTING, SPREADING, AND COMPACTING

Do not pave HMA on a wet pavement or frozen surface.

You may deposit HMA in a windrow and load it in the paver if:

1. Paver is equipped with a hopper that automatically feeds the screed
2. Loading equipment can pick up the windrowed material and deposit it in the paver hopper without damaging base material
3. Activities for deposit, pick-up, loading, and paving are continuous
4. HMA temperature in the windrow does not fall below 260 °F

You may pave HMA in 1 or more layers on areas less than 5 feet wide and outside the traveled way including shoulders. You may use mechanical equipment other than a paver for these areas. The equipment must produce a uniform smoothness and texture.

HMA handled, spread, or windrowed must not stain the finished surface of any improvement including pavement.

Do not use petroleum products such as kerosene or diesel fuel to release HMA from trucks, spreaders, or compactors.

HMA must be free of:

1. Segregation
2. Coarse or fine aggregate pockets
3. Hardened lumps

Longitudinal joints in the top layer must match specified lane edges. Alternate longitudinal joint offsets in lower layers at least 0.5 foot from each side of the specified lane edges. You may request in writing other longitudinal joint placement patterns.

Until the adjoining through lane's top layer has been paved, do not pave the top layer of:

1. Shoulders
2. Tapers
3. Transitions

4. Road connections
5. Driveways
6. Curve widenings
7. Chain control lanes
8. Turnouts
9. Turn pockets

If the number of lanes change, pave each through lane's top layer before paving a tapering lane's top layer. Simultaneous to paving a through lane's top layer, you may pave an adjoining area's top layer including shoulders. Do not operate spreading equipment on any area's top layer until completing final compaction.

If HMA (leveling) is specified, fill and level irregularities and ruts with HMA before spreading HMA over base, existing surfaces, or bridge decks. You may use mechanical equipment other than a paver for these areas. The equipment must produce a uniform smoothness and texture. HMA used to change an existing surface's cross slope or profile is not HMA (leveling).

If placing HMA against the edge of existing pavement, sawcut or grind the pavement straight and vertical along the joint and remove extraneous material without damaging the surface remaining in place. If placing HMA against the edge of a longitudinal or transverse construction joint and the joint is damaged or not placed to a neat line, sawcut or grind the pavement straight and vertical along the joint and remove extraneous material without damaging the surface remaining in place. Repair or remove and replace damaged pavement at your expense.

Rolling must leave the completed surface compacted and smooth without tearing, cracking, or shoving. Complete finish rolling activities before the pavement surface temperature is:

1. Below 150 °F for HMA with unmodified binder
2. Below 140 °F for HMA with modified binder
3. Below 200 °F for RHMA-G

If a vibratory roller is used as a finish roller, turn the vibrator off.

Do not use a pneumatic tired roller to compact RHMA-G.

For Standard and QC/QA, if a 3/4-inch aggregate grading is specified, you may use a 1/2-inch aggregate grading if the specified paved thickness is from 0.15 foot to 0.20 foot thick.

Spread and compact HMA under Section 39-3.03, "Spreading and Compacting Equipment," and Section 39-3.04, "Transporting, Spreading, and Compacting," for any of the following:

1. Specified paved thickness is less than 0.15 foot.
2. Specified paved thickness is less than 0.20 foot and a 3/4-inch aggregate grading is specified and used.
3. You spread and compact at:

    3.1. Asphalt concrete surfacing replacement areas
    3.2. Leveling courses

3.3. Areas the Engineer determines conventional compaction and compaction measurement methods are impeded

Do not allow traffic on new HMA pavement until its mid-depth temperature is below 160 °F.

If you request in writing and the Engineer authorizes, you may cool HMA Type A and Type B with water when rolling activities are complete. Apply water under Section 17, "Watering."

Spread sand at a rate between 1 pound and 2 pounds per square yard on new RHMA-G, RHMA-O, and RHMA-O-HB pavement when finish rolling is complete. Sand must be free of clay or organic matter. Sand must comply with Section 90-3.03, "Fine Aggregate Grading." Keep traffic off the pavement until spreading sand is complete.

39-1.12 SMOOTHNESS

39-1.12A General

Determine HMA smoothness with a profilograph and a straightedge.

Smoothness specifications do not apply to OGFC placed on existing pavement not constructed under the same project.

If portland cement concrete is placed on HMA:

1. Cold plane the HMA finished surface to within specified tolerances if it is higher than the grade specified by the Engineer.
2. Remove and replace HMA if the finished surface is lower than 0.05 foot below the grade specified by the Engineer.

39-1.12B Straightedge

The HMA pavement top layer must not vary from the lower edge of a 12-foot long straightedge:

1. More than 0.01 foot when the straight edge is laid parallel with the centerline
2. More than 0.02 foot when the straightedge is laid perpendicular to the centerline and extends from edge to edge of a traffic lane
3. More than 0.02 foot when the straightedge is laid within 24 feet of a pavement conform

39-1.12C Profilograph

Under California Test 526, determine the zero (null) blanking band Profile Index (PI_0) and must-grinds on the top layer of HMA Type A, Type B, and RHMA-G pavement. Take 2 profiles within each traffic lane, 3 feet from and parallel with the edge of each lane.

A must-grind is a deviation of 0.3 inch or more in a length of 25 feet. You must correct must-grinds.

For OGFC, only determine must-grinds when placed over HMA constructed under the same project. The top layer of the underlying HMA must comply with the smoothness specifications before placing OGFC.

Profile pavement in the Engineer's presence. Choose the time of profiling.

On tangents and horizontal curves with a centerline radius of curvature 2,000 feet or more, the PI_0 must be at most 3 inches per 0.1-mile section.

On horizontal curves with a centerline radius of curvature between 1,000 feet and 2,000 feet including pavement within the superelevation transitions, the PI_0 must be at most 6 inches per 0.1-mile section.

Before the Engineer accepts HMA pavement for smoothness, submit written final profilograms.

Submit 1 electronic copy of profile information in Microsoft Excel and 1 electronic copy of longitudinal pavement profiles in ".erd" format or other ProVAL compatible format to the Engineer and to:

Smoothness@dot.ca.gov

The following HMA pavement areas do not require a PI_0. You must measure these areas with a 12-foot straightedge and determine must-grinds with a profilograph:

1. New HMA with a total thickness less than or equal to 0.25 foot
2. HMA sections of city or county streets and roads, turn lanes and collector lanes that are less than 1,500 feet in length

The following HMA pavement areas do not require a PI_0. You must measure these areas with a 12-foot straightedge:

1. Horizontal curves with a centerline radius of curvature less than 1,000 feet including pavement within the superelevation transitions of those curves
2. Within 12 feet of a transverse joint separating the pavement from:

    2.1. Existing pavement not constructed under the same project
    2.2. A bridge deck or approach slab

3. Exit ramp termini, truck weigh stations, and weigh-in-motion areas
4. If steep grades and superelevation rates greater than 6 percent are present on:

    4.1. Ramps
    4.2. Connectors

5. Turn lanes
6. Areas within 15 feet of manholes or drainage transitions
7. Acceleration and deceleration lanes for at-grade intersections
8. Shoulders and miscellaneous areas
9. HMA pavement within 3 feet from and parallel to the construction joints formed between curbs, gutters, or existing pavement

39-1.12D Smoothness Correction

If the top layer of HMA Type A, Type B, or RHMA-G pavement does not comply with the smoothness specifications, grind the pavement to within tolerances, remove and replace it, or place a layer of HMA. The Engineer must authorize your choice of correction before the work begins.

Remove and replace the areas of OGFC not in compliance with the must-grind and straightedge specifications, except you may grind OGFC for correcting smoothness:

1. At a transverse joint separating the pavement from pavement not constructed under the same project
2. Within 12 feet of a transverse joint separating the pavement from a bridge deck or approach slab

Corrected HMA pavement areas must be uniform rectangles with edges:

1. Parallel to the nearest HMA pavement edge or lane line
2. Perpendicular to the pavement centerline

Measure the corrected HMA pavement surface with a profilograph and a 12-foot straightedge and correct the pavement to within specified tolerances. If a must-grind area or straightedged pavement cannot be corrected to within specified tolerances, remove and replace the pavement.

On ground areas not overlaid with OGFC, apply fog seal coat under Section 37-1, "Seal Coats."

39-1.13 MISCELLANEOUS AREAS AND DIKES

Miscellaneous areas are outside the traveled way and include:

1. Median areas not including inside shoulders
2. Island areas
3. Sidewalks
4. Gutters
5. Gutter flares
6. Ditches
7. Overside drains
8. Aprons at the ends of drainage structures

Spread miscellaneous areas in 1 layer and compact to the specified lines and grades.

For miscellaneous areas and dikes:

1. Do not submit a JMF.
2. Choose the 3/8-inch or 1/2-inch HMA Type A and Type B aggregate gradations.
3. Minimum asphalt binder content must be 6.8 percent for 3/8-inch aggregate and 6.0 percent for 1/2-inch aggregate. If you request in writing and the Engineer authorizes, you may reduce the minimum asphalt binder content.
4. Choose asphalt binder Grade PG 70-10 or the same grade specified for HMA.

39-2 STANDARD

39-2.01 DESCRIPTION

If HMA is specified as Standard, construct it under Section 39-1, "General," this Section 39-2, "Standard," and Section 39-5, "Measurement and Payment."

39-2.02 CONTRACTOR QUALITY CONTROL

39-2.02A Quality Control Plan

Establish, implement, and maintain a Quality Control Plan (QCP) for HMA. The QCP must describe the organization and procedures you will use to:

1. Control the quality characteristics
2. Determine when corrective actions are needed (action limits)
3. Implement corrective actions

When you submit the proposed JMF, submit the written QCP. You and the Engineer must discuss the QCP during the prepaving conference.

The QCP must address the elements affecting HMA quality including:

1. Aggregate
2. Asphalt binder
3. Additives
4. Production
5. Paving

The Engineer reviews each QCP within 5 business days from the submittal. Hold HMA production until the Engineer accepts the QCP in writing. The Engineer's QCP acceptance does not mean your compliance with the QCP will result in acceptable HMA. Section 39-1.05, "Engineer's Acceptance," specifies HMA acceptance.

39-2.02B Quality Control Testing

Perform sampling and testing at the specified frequency for the following quality characteristics:

Minimum Quality Control – Standard

Quality Characteristic	Test Method	Minimum Sampling and Testing Frequency	HMA Type			
			A	B	RHMA-G	OGFC
Aggregate gradation[a]	CT 202	1 per 750 tons and any remaining part	JMF ± Tolerance[b]	JMF ± Tolerance[b]	JMF ± Tolerance[b]	JMF ± Tolerance[b]
Sand equivalent (min.)[c]	CT 217		47	42	47	--
Asphalt binder content (%)	CT 379 or 382		JMF ± 0.45	JMF ± 0.45	JMF ± 0.50	JMF ± 0.50
HMA moisture content (%, max.)	CT 226 or CT 370	1 per 2,500 tons but not less than 1 per paving day	1.0	1.0	1.0	1.0
Percent of maximum theoretical density (%)[d, e]	Quality control plan	2 per business day (min.)	91 - 97	91 - 97	91 - 97	--
Stabilometer value (min.)[c, f]	CT 366	One per 4,000 tons or 2 per 5 business days, which-ever is more				
No. 4 and 3/8" gradings			30	30	--	--
1/2" and 3/4" gradings			37	35	23	--
Air voids content (%)[c, g]	CT 367		4 ± 2	4 ± 2	Specification ± 2	--
Aggregate moisture content at continuous mixing plants and RAP moisture content at continuous mixing plants and batch mixing plants[h]	CT 226 or CT 370	2 per day during production	--	--	--	--
Percent of crushed particles coarse aggregate (%, min.)	CT 205	As necessary and designat-ed in the QCP. At least once per project				
One fractured face			90	25	--	90
Two fractured faces			75	--	90	75
Fine aggregate (%, min) (Passing No. 4 sieve and retained on No. 8 sieve.) One fractured face			70	20	70	90
Los Angeles Rattler (%, max.)	CT 211					
Loss at 100 rev.			12	--	12	12
Loss at 500 rev.			45	50	40	40

Flat and elongated particles (%, max. by weight @ 5:1)	ASTM D 4791		Report only	Report only	Report only	Report only
Fine aggregate angularity (%, min.)	AASHTO T 304, Method A		45	45	45	--
Voids filled with asphalt (%)[i] No. 4 grading 3/8" grading 1/2" grading 3/4" grading	LP-3		 76.0 – 80.0 73.0 – 76.0 65.0 – 75.0 65.0 – 75.0	 76.0 – 80.0 73.0 – 76.0 65.0 – 75.0 65.0 – 75.0	Report only	--
Voids in mineral aggregate (% min.)[i] No. 4 grading 3/8" grading 1/2" grading 3/4" grading	LP-2		 17.0 15.0 14.0 13.0	 17.0 15.0 14.0 13.0	 -- -- 18.0 – 23.0[j] 18.0 – 23.0[j]	--
Dust proportion[i] No. 4 and 3/8" gradings 1/2" and 3/4" gradings	LP-4		 0.9 – 2.0 0.6 – 1.3	 0.9 – 2.0 0.6 – 1.3	Report only	--
Smoothness	Section 39-1.12	--	12-foot straightedge, must-grind, and PI_0	12-foot straightedge, must-grind, and PI_0	12-foot straightedge, must-grind, and PI_0	12-foot straightedge and must-grind
Asphalt rubber binder viscosity @ 350 °F, centipoises	Section 39-1.02D	Section 39-1.04C	--	--	1,500 – 4,000	1,500 – 4,000
Asphalt modifier	Section 39-1.02D	Section 39-1.04C	--	--	Section 39-1.02D	Section 39-1.02D
Crumb rubber modifier	Section 39-1.02D	Section 39-1.04C	--	--	Section 39-1.02D	Section 39-1.02D

Notes:

[a] Determine combined aggregate gradation containing RAP under Laboratory Procedure LP-9.

[b] The tolerances must comply with the allowable tolerances in Section 39-1.02E, "Aggregate."

[c] Report the average of 3 tests from a single split sample.

[d] Required for HMA Type A, Type B, and RHMA-G if the specified paved thickness is at least 0.15 foot.

[e] Determine maximum theoretical density (California Test 309) at the frequency specified for Test Maximum Density under California Test 375, Part 5.D.

[f] Modify California Test 304, Part 2.B.2.c: "After compaction in the mechanical compactor, cool to 140 °F ± 5 °F by allowing the briquettes to cool at room temperature for 0.5 hour, then place the briquettes in the oven at 140 °F for a minimum of 2 hours and not more than 3 hours."

[g] Determine the bulk specific gravity of each lab-compacted briquette under California Test 308, Method A, and theoretical maximum specific gravity under California Test 309.

[h] For adjusting the plant controller at the HMA plant.

[i] Report only if the adjustment for asphalt binder content target value is less than or equal to ± 0.3 percent from OBC.

[j] Voids in mineral aggregate for RHMA-G must be within this range.

For any single quality characteristic except smoothness, if 2 consecutive quality control test results do not comply with the action limits or specifications:

1. Stop production.
2. Notify the Engineer in writing.

3. Take corrective action.
4. Demonstrate compliance with the specifications before resuming production and placement on the State highway.

39-2.03 ENGINEER'S ACCEPTANCE

39-2.03A Testing

The Engineer samples for acceptance testing and tests for:

HMA Acceptance - Standard

Quality Characteristic	Test Method	HMA Type			
		A	B	RHMA-G	OGFC
Aggregate gradation [a]	CT 202	JMF ± Tolerance [c]	JMF ± Tolerance [c]	JMF ± Tolerance [c]	JMF ± Tolerance [c]
Sieve: 3/4" / 1/2" / 3/8"					
1/2": X [b] /					
3/8": / X /					
No. 4: / / X					
No. 8: X / X / X					
No. 200: X / X / X					
Sand equivalent (min.) [d]	CT 217	47	42	47	--
Asphalt binder content (%)	CT 379 or 382	JMF ± 0.45	JMF ± 0.45	JMF ± 0.50	JMF ± 0.50
HMA moisture content (%, max.)	CT 226 or CT 370	1.0	1.0	1.0	1.0
Percent of maximum theoretical density (%) [e, f]	CT 375	91 – 97	91 – 97	91 – 97	--
Stabilometer value (min.) [d, g]	CT 366				
No. 4 and 3/8" gradings		30	30	--	--
1/2" and 3/4" gradings		37	35	23	--
Air voids content (%) [d, h]	CT 367	4 ± 2	4 ± 2	Specification ± 2	--
Percent of crushed particles	CT 205				
Coarse aggregate (%, min.)					
One fractured face		90	25	--	90
Two fractured faces		75	--	90	75
Fine aggregate (%, min) (Passing No. 4 sieve and retained on No. 8 sieve.)					
One fractured face		70	20	70	90
Percent of crushed particles	CT 205				
Coarse aggregate (%, min.)					
One fractured face		90	25	--	90
Two fractured faces		75	--	90	75
Los Angeles Rattler (%, max.)	CT 211				
Loss at 100 rev.		12	--	12	12
Loss at 500 rev.		45	50	40	40
Fine aggregate angularity (%, min.)	AASHTO T 304, Method A	45	45	45	--
Flat and elongated particles (%, max. by weight @ 5:1)	ASTM D 4791	Report only	Report only	Report only	Report only
Voids filled with asphalt (%) [i]	LP-3				
No. 4 grading		76.0 – 80.0	76.0 – 80.0	Report only	
3/8" grading		73.0 – 76.0	73.0 – 76.0		--
1/2" grading		65.0 – 75.0	65.0 – 75.0		
3/4" grading		65.0 – 75.0	65.0 – 75.0		
Voids in mineral aggregate (% min.) [i]	LP-2				
No. 4 grading		17.0	17.0	--	--
3/8" grading		15.0	15.0	--	
1/2" grading		14.0	14.0	18.0 – 23.0 [j]	
3/4" grading		13.0	13.0	18.0 – 23.0 [j]	
Dust proportion [i]	LP-4				--

No. 4 and 3/8" gradings 1/2" and 3/4" gradings		0.9 – 2.0 0.6 – 1.3	0.9 – 2.0 0.6 – 1.3	Report only	
Smoothness	Section 39-1.12	12-foot straightedge, must-grind, and PI_0	12-foot straightedge, must-grind, and PI_0	12-foot straightedge, must-grind, and PI_0	12-foot straightedge and must-grind
Asphalt binder	Various	Section 92	Section 92	Section 92	Section 92
Asphalt rubber binder	Various	--	--	Section 92-1.02(C) and Section 39-1.02D	Section 92-1.02(C) and Section 39-1.02D
Asphalt modifier	Various	--	--	Section 39-1.02D	Section 39-1.02D
Crumb rubber modifier	Various	--	--	Section 39-1.02D	Section 39-1.02D

[a] The Engineer determines combined aggregate gradations containing RAP under Laboratory Procedure LP-9.
[b] "X" denotes the sieves the Engineer considers for the specified aggregate gradation.
[c] The tolerances must comply with the allowable tolerances in Section 39-1.02E, "Aggregate."
[d] The Engineer reports the average of 3 tests from a single split sample.
[e] The Engineer determines percent of maximum theoretical density if the specified paved thickness is at least 0.15 foot under California Test 375 except the Engineer uses:

1. California Test 308, Method A, to determine in-place density of each density core instead of using the nuclear gauge in Part 4, "Determining In-Place Density By The Nuclear Density Device."
2. California Test 309 to determine maximum theoretical density instead of calculating test maximum density in Part 5, "Determining Test Maximum Density."

[f] The Engineer determines maximum theoretical density (California Test 309) at the frequency specified for Test Maximum Density under California Test 375, Part 5.D.
[g] Modify California Test 304, Part 2.B.2.c: "After compaction in the mechanical compactor, cool to 140 °F ±5 °F by allowing the briquettes to cool at room temperature for 0.5 hour, then place the briquettes in the oven at 140 °F for a minimum of 2 hours and not more than 3 hours."
[h] The Engineer determines the bulk specific gravity of each lab-compacted briquette under California Test 308, Method A, and theoretical maximum specific gravity under California Test 309.
[i] Report only if the adjustment for asphalt binder content target value is less than or equal to ± 0.3 percent from OBC.
[j] Voids in mineral aggregate for RHMA-G must be within this range.

No single test result may represent more than the smaller of 750 tons or 1 day's production.

For any single quality characteristic except smoothness, if 2 consecutive acceptance test results do not comply with the specifications:

1. Stop production.
2. Take corrective action.
3. In the Engineer's presence, take samples and split each sample into 4 parts. Test 1 part for compliance with the specifications and submit 3 parts to the Engineer. The Engineer tests 1 part for compliance with the specifications and reserves and stores 2 parts.
4. Demonstrate compliance with the specifications before resuming production and placement on the State highway.

The Engineer tests the density core you take from each 250 tons of HMA production. The Engineer determines the percent of maximum theoretical density for each density

core by determining the density core's density and dividing by the maximum theoretical density.

If the specified total paved thickness is at least 0.15 foot and any layer is less than 0.15 foot, the Engineer determines the percent of maximum theoretical density from density cores taken from the final layer measured the full depth of the total paved HMA thickness.

For percent of maximum theoretical density, the Engineer determines a deduction for each test result outside the specifications in compliance with:

Reduced Payment Factors for Percent of Maximum Theoretical Density

HMA Type A and B and RHMA-G Percent of Maximum Theoretical Density	Reduced Payment Factor	HMA Type A and B and RHMA-G Percent of Maximum Theoretical Density	Reduced Payment Factor
91.0	0.0000	97.0	0.0000
90.9	0.0125	97.1	0.0125
90.8	0.0250	97.2	0.0250
90.7	0.0375	97.3	0.0375
90.6	0.0500	97.4	0.0500
90.5	0.0625	97.5	0.0625
90.4	0.0750	97.6	0.0750
90.3	0.0875	97.7	0.0875
90.2	0.1000	97.8	0.1000
90.1	0.1125	97.9	0.1125
90.0	0.1250	98.0	0.1250
89.9	0.1375	98.1	0.1375
89.8	0.1500	98.2	0.1500
89.7	0.1625	98.3	0.1625
89.6	0.1750	98.4	0.1750
89.5	0.1875	98.5	0.1875
89.4	0.2000	98.6	0.2000
89.3	0.2125	98.7	0.2125
89.2	0.2250	98.8	0.2250
89.1	0.2375	98.9	0.2375
89.0	0.2500	99.0	0.2500
< 89.0	Remove and Replace	> 99.0	Remove and Replace

39-2.04 TRANSPORTING, SPREADING, AND COMPACTING

Determine the number of rollers needed to obtain the specified density and surface finish.

39-3 METHOD

39-3.01 DESCRIPTION

If HMA is specified as Method, construct it under Section 39-1, "General," this Section 39-3, "Method," and Section 39-5, "Measurement and Payment."

39-3.02 ENGINEER'S ACCEPTANCE

39-3.02A Testing

The Engineer samples for acceptance testing and tests for:

HMA Acceptance - Method

Quality Characteristic	Test Method	HMA Type			
		A	B	RHMA-G	OGFC
Aggregate gradation [a]	CT 202	JMF ± Tolerance [b]	JMF ± Tolerance [b]	JMF ± Tolerance [b]	JMF ± Tolerance [b]
Sand equivalent (min.) [c]	CT 217	47	42	47	--
Asphalt binder content (%)	CT 379 or 382	JMF ± 0.45	JMF ± 0.45	JMF ± 0.50	JMF ± 0.50
HMA moisture content (%, max.)	CT 226 or CT 370	1.0	1.0	1.0	1.0
Stabilometer value (min.) [c, d]	CT 366				
No. 4 and 3/8" gradings		30	30	--	--
1/2" and 3/4" gradings		37	35	23	--
Percent of crushed particles	CT 205				
Coarse aggregate (% min.)					
One fractured face		90	25	--	90
Two fractured faces		75	--	90	75
Fine aggregate (% min) (Passing No. 4 sieve and retained on No. 8 sieve.)					
One fractured face		70	20	70	90
Los Angeles Rattler (% max.)	CT 211				
Loss at 100 rev.		12	--	12	12
Loss at 500 rev.		45	50	40	40
Air voids content (%) [c, e]	CT 367	4 ± 2	4 ± 2	Specification ± 2	--
Fine aggregate angularity (% min.)	AASHTO T 304, Method A	45	45	45	--
Flat and elongated particles (% max. by weight @ 5:1)	ASTM D 4791	Report only	Report only	Report only	Report only
Voids filled with asphalt (%) [f]	LP-3			Report only	
No. 4 grading		76.0 – 80.0	76.0 – 80.0		--
3/8" grading		73.0 – 76.0	73.0 – 76.0		
1/2" grading		65.0 – 75.0	65.0 – 75.0		
3/4" grading		65.0 – 75.0	65.0 – 75.0		
Voids in mineral aggregate (% min.) [f]	LP-2				
No. 4 grading		17.0	17.0	--	--
3/8" grading		15.0	15.0	--	
1/2" grading		14.0	14.0	18.0 – 23.0 [g]	
3/4" grading		13.0	13.0	18.0 – 23.0 [g]	
Dust proportion [f]	LP-4				
No. 4 and 3/8" gradings		0.9 – 2.0	0.9 – 2.0	Report only	--
1/2" and 3/4" gradings		0.6 – 1.3	0.6 – 1.3		
Smoothness	Section 39-1.12	12-foot straightedge and must-grind	12-foot straightedge and must-grind	12-foot straightedge and must-grind	12-foot straightedge and must-grind
Asphalt binder	Various	Section 92	Section 92	Section 92	Section 92

Asphalt rubber binder	Various	--	--	Section 92-1.02(C) and Section 39-1.02D	Section 92-1.02(C) and Section 39-1.02D
Asphalt modifier	Various	--	--	Section 39-1.02D	Section 39-1.02D
Crumb rubber modifier	Various	--	--	Section 39-1.02D	Section 39-1.02D

[a] The Engineer determines combined aggregate gradations containing RAP under Laboratory Procedure LP-9.
[b] The tolerances must comply with the allowable tolerances in Section 39-1.02E, "Aggregate."
[c] The Engineer reports the average of 3 tests from a single split sample.
[d] Modify California Test 304, Part 2.B.2.c: "After compaction in the mechanical compactor, cool to 140 °F ±5 °F by allowing the briquettes to cool at room temperature for 0.5 hour, then place the briquettes in the oven at 140 °F for a minimum of 2 hours and not more than 3 hours."
[e] The Engineer determines the bulk specific gravity of each lab-compacted briquette under California Test 308, Method A, and theoretical maximum specific gravity under California Test 309.
[f] Report only if the adjustment for asphalt binder content target value is less than or equal to ± 0.3 percent from OBC.
[g] Voids in mineral aggregate for RHMA-G must be within this range.

No single test result may represent more than the smaller of 750 tons or 1 day's production.

For any single quality characteristic except smoothness, if 2 consecutive acceptance test results do not comply with the specifications:

1. Stop production.
2. Take corrective action.
3. In the Engineer's presence, take samples and split each sample into 4 parts. Test 1 part for compliance with the specifications and submit 3 parts to the Engineer. The Engineer tests 1 part for compliance with the specifications and reserves and stores 2 parts.
4. Demonstrate compliance with the specifications before resuming production and placement on the State highway.

39-3.03 SPREADING AND COMPACTING EQUIPMENT

Each paver spreading HMA Type A and Type B must be followed by 3 rollers:

1. One vibratory roller specifically designed to compact HMA. The roller must be capable of at least 2,500 vibrations per minute and must be equipped with amplitude and frequency controls. The roller's gross static weight must be at least 7.5 tons.
2. One oscillating type pneumatic-tired roller at least 4 feet wide. Pneumatic tires must be of equal size, diameter, type, and ply. The tires must be inflated to 60 psi minimum and maintained so that the air pressure does not vary more than 5 psi.
3. One steel-tired, 2-axle tandem roller. The roller's gross static weight must be at least 7.5 tons.

Each roller must have a separate operator. Rollers must be self-propelled and reversible.

Compact RHMA-G under the specifications for compacting HMA Type A and Type B except do not use pneumatic-tired rollers.

Compact OGFC with steel-tired, 2-axle tandem rollers. If placing over 300 tons of OGFC per hour, use at least 3 rollers for each paver. If placing less than 300 tons of OGFC per hour, use at least 2 rollers for each paver. Each roller must weigh between 126 pounds to 172 pounds per linear inch of drum width. Turn the vibrator off.

39-3.04 TRANSPORTING, SPREADING, AND COMPACTING

Pave HMA in maximum 0.25-foot thick compacted layers.

If the surface to be paved is both in sunlight and shade, pavement surface temperatures are taken in the shade.

Spread HMA Type A and Type B only if atmospheric and surface temperatures are:

Minimum Atmospheric and Surface Temperatures

Compacted Layer Thickness, feet	Atmospheric,° F		Surface,° F	
	Unmodified Asphalt Binder	Modified Asphalt Binder[a]	Unmodified Asphalt Binder	Modified Asphalt Binder[a]
< 0.15	55	50	60	55
0.15 – 0.25	45	45	50	50

Note:
[a] Except asphalt rubber binder.

If the asphalt binder for HMA Type A and Type B is:

1. Unmodified asphalt binder, complete:

   1.1. First coverage of breakdown compaction before the surface temperature drops below 250 °F
   1.2. Breakdown and intermediate compaction before the surface temperature drops below 200 °F
   1.3. Finish compaction before the surface temperature drops below 150 °F

2. Modified asphalt binder, complete:

   2.1. First coverage of breakdown compaction before the surface temperature drops below 240 °F
   2.2. Breakdown and intermediate compaction before the surface temperature drops below 180 °F
   2.3. Finish compaction before the surface temperature drops below 140 °F

For RHMA-G:

1. Only spread and compact if the atmospheric temperature is at least 55 °F and the surface temperature is at least 60 °F.
2. Complete the first coverage of breakdown compaction before the surface temperature drops below 280 °F.
3. Complete breakdown and intermediate compaction before the surface temperature drops below 250 °F.

4. Complete finish compaction before the surface temperature drops below 200 °F.
5. If the atmospheric temperature is below 70 °F, cover loads in trucks with tarpaulins. The tarpaulins must completely cover the exposed load until you transfer the mixture to the paver's hopper or to the pavement surface.

For OGFC with unmodified asphalt binder:

1. Only spread and compact if the atmospheric temperature is at least 55 °F and the surface temperature is at least 60 °F.
2. Complete first coverage using 2 rollers before the surface temperature drops below 240 °F.
3. Complete all compaction before the surface temperature drops below 200 °F.
4. If the atmospheric temperature is below 70 °F, cover loads in trucks with tarpaulins. The tarpaulins must completely cover the exposed load until you transfer the mixture to the paver's hopper or to the pavement surface.

For OGFC with modified asphalt binder except asphalt rubber binder:

1. Only spread and compact if the atmospheric temperature is at least 50 °F and the surface temperature is at least 50 °F.
2. Complete first coverage using 2 rollers before the surface temperature drops below 240 °F.
3. Complete all compaction before the surface temperature drops below 180 °F.
4. If the atmospheric temperature is below 70 °F, cover loads in trucks with tarpaulins. The tarpaulins must completely cover the exposed load until you transfer the mixture to the paver's hopper or to the pavement surface.

For RHMA-O and RHMA-O-HB:

1. Only spread and compact if the atmospheric temperature is at least 55 °F and surface temperature is at least 60 °F.
2 Complete the 1st coverage using 2 rollers before the surface temperature drops below 280 °F.
3. Complete compaction before the surface temperature drops below 250 °F.
4. If the atmospheric temperature is below 70 °F, cover loads in trucks with tarpaulins. The tarpaulins must completely cover the exposed load until the mixture is transferred to the paver's hopper or to the pavement surface.

For RHMA-G and OGFC, tarpaulins are not required if the time from discharge to truck until transfer to the paver's hopper or the pavement surface is less than 30 minutes.

HMA compaction coverage is the number of passes needed to cover the paving width. A pass is 1 roller's movement parallel to the paving in either direction. Overlapping passes are part of the coverage being made and are not a subsequent coverage. Do not start a coverage until completing the prior coverage.

Start rolling at the lower edge and progress toward the highest part.

Perform breakdown compaction of each layer of HMA Type A, Type B, and RHMA-G with 3 coverages using a vibratory roller. The speed of the vibratory roller in miles per

hour must not exceed the vibrations per minute divided by 1,000. If the HMA layer thickness is less than 0.08 foot, turn the vibrator off. The Engineer may order fewer coverages if the HMA layer thickness is less than 0.15 foot.

Perform intermediate compaction of each layer of HMA Type A and Type B with 3 coverages using a pneumatic-tired roller at a speed not to exceed 5 mph.

Perform finish compaction of HMA Type A, Type B, and RHMA-G with 1 coverage using a steel-tired roller.

Compact OGFC with 2 coverages using steel-tired rollers.

39-4 QUALITY CONTROL / QUALITY ASSURANCE

39-4.01 DESCRIPTION

If HMA is specified as Quality Control / Quality Assurance, construct it under Section 39-1, "General," this Section 39-4, "Quality Control / Quality Assurance," and Section 39-5, "Measurement and Payment."

39-4.02 GENERAL

The QC / QA construction process consists of:

1. Establishing, maintaining, and changing if needed a quality control system providing assurance the HMA complies with the specifications
2. Sampling and testing at specified intervals, or sublots, to demonstrate compliance and to control process
3. The Engineer sampling and testing at specified intervals to verify testing process and HMA quality
4. The Engineer using test results, statistical evaluation of verified quality control tests, and inspection to accept HMA for payment

A lot is a quantity of HMA. The Engineer designates a new lot when:

1. 20 sublots are complete
2. The JMF changes
3. Production stops for more than 30 days

Each lot consists of no more than 20 sublots. A sublot is 750 tons except HMA paved at day's end greater than 250 tons is a sublot. If HMA paved at day's end is less than 250 tons, you may either make this quantity a sublot or include it in the previous sublot's test results for statistical evaluation.

39-4.03 CONTRACTOR QUALITY CONTROL

39-4.03A General

Use a composite quality factor, QF_C, and individual quality factors, QF_{QCi}, to control your process and evaluate your quality control program. For quality characteristics without quality factors, use your quality control plan's action limits to control process.

Control HMA quality including:

1. Materials
2. Proportioning

3. Spreading and compacting
4. Finished roadway surface

Develop, implement, and maintain a quality control program that includes:

1. Inspection
2. Sampling
3. Testing

39-4.03B Quality Control Plan

With the JMF submittal, submit a written Quality Control Plan (QCP). The QCP must comply with the Department's Quality Control Manual for Hot Mix Asphalt Production and Placement. Discuss the QCP with the Engineer during the prepaving conference.

The Engineer reviews each QCP within 5 business days from the submittal. Hold HMA production until the Engineer accepts the QCP in writing. The Engineer's QCP acceptance does not mean your compliance with the QCP will result in acceptable HMA. Section 39-1.05, "Engineer's Acceptance," specifies HMA acceptance.

The QCP must include the name and qualifications of a Quality Control Manager. The Quality Control Manager administers the QCP and during paving must be at the job site within 3 hours of receiving notice. The Quality Control Manager must not be any of the following on the project:

1. Foreman
2. Production or paving crewmember
3. Inspector
4. Tester

The QCP must include action limits and details of corrective action you will take if a test result for any quality characteristic falls outside an action limit.

As work progresses, you must submit a written QCP supplement to change quality control procedures, personnel, tester qualification status, or laboratory accreditation status.

39-4.03C Quality Control Inspection, Sampling, And Testing

Sample, test, inspect, and manage HMA quality control.

Provide a roadway inspector while HMA paving activities are in progress. Provide a plant inspector during HMA production.

Inspectors must comply with the Department's Quality Control Manual for Hot Mix Asphalt Production and Placement.

Provide a testing laboratory and personnel for quality control testing. Provide the Engineer unrestricted access to the quality control activities. Before providing services for the project, the Engineer reviews, accredits, and qualifies the testing laboratory and personnel under the Department's Independent Assurance Program.

The minimum random sampling and testing for quality control is:

Minimum Quality Control – QC / QA

Quality Characteristic	Test Method	Minimum Sampling and Testing Frequency	HMA Type			Location of Sampling	Max. Reporting Time Allowance
			A	B	RHMA-G		
Aggregate gradation [a]	CT 202	1 per 750 tons	JMF ± Tolerance [b]	JMF ± Tolerance [b]	JMF ± Tolerance [b]	CT 125	24 hours
Asphalt binder content (%)	CT 379 or 382		JMF ±0.45	JMF ±0.45	JMF ±0.5	Loose Mix Behind Paver See CT 125	
Percent of maximum theoretical density (%) [c, d]	QC Plan		92 - 96	92 - 96	91 - 96	QC Plan	
Aggregate moisture content at continuous mixing plants and RAP moisture content at continuous mixing plants and batch mixing plants [e]	CT 226 or CT 370	2 per day during production	--	--	--	Stockpiles or cold feed belts	--
Sand equivalent (min.) [f]	CT 217	1 per 750 tons	47	42	47	CT 125	24 hours
HMA moisture content (%,max.)	CT 226 or CT 370	1 per 2,500 tons but not less than 1 per paving day	1.0	1.0	1.0	Loose Mix Behind Paver See CT 125	24 hours
Stabilometer Value (min.) [f, g] No. 4 and 3/8" gradings 1/2" and 3/4" gradings	CT 366	1 per 4,000 tons or 2 per 5 business days, whichever is more	30 37	30 35	-- 23		48 hours
Air voids content (%) [f, h]	CT 367		4 ± 2	4 ± 2	Specification ± 2		

Percent of crushed particles coarse aggregate (% min.) One fractured face Two fractured faces Fine aggregate (% min) (Passing No. 4 sieve and retained on No. 8 sieve.) One fractured face	CT 205	As necessary and designated in QCP. At least once per project.	90 75 70	25 -- 20	-- 90 70	CT 125	48 hours
Los Angeles Rattler (% max.) Loss at 100 rev. Loss at 500 rev.	CT 211		12 45	-- 50	12 40	CT 125	
Fine aggregate angularity (% min.)	AASHTO T 304, Method A		45	45	45	CT 125	
Flat and elongated particle (% max. by weight @ 5:1)	ASTM D 4791		Report only	Report only	Report only	CT 125	
Voids filled with asphalt (%) [i] No. 4 grading 3/8" grading 1/2" grading 3/4" grading	LP-3		76.0 – 80.0 73.0 – 76.0 65.0 – 75.0 65.0 – 75.0	76.0 – 80.0 73.0 – 76.0 65.0 – 75.0 65.0 – 75.0	Report only	LP-3	
Voids in mineral aggregate (% min.) [i] No. 4 grading 3/8" grading 1/2" grading 3/4" grading	LP-2		17.0 15.0 14.0 13.0	17.0 15.0 14.0 13.0	-- -- 18.0 – 23.0 [j] 18.0 – 23.0 [j]	LP-2	
Dust proportion [i] No. 4 and 3/8" gradings 1/2" and 3/4" gradings	LP-4		0.9 – 2.0 0.6 – 1.3	0.9 – 2.0 0.6 – 1.3	Report only	LP-4	
Smoothness	Section 39-1.12	--	12-foot straight-edge, must-grind, and PI_0	12-foot straight-edge, must-grind, and PI_0	12-foot straight-edge, must-grind, and PI_0	--	
Asphalt rubber binder viscosity @ 350 °F, centipoises	Section 39-1.02D	--	--	--	1,500 – 4,000	Section 39-1.02D	24 hours
Crumb rubber modifier	Section 39-1.02D	--	--	--	Section 39-1.02D	Section 39-1.02D	48 hours

Notes:

[a] Determine combined aggregate gradation containing RAP under Laboratory Procedure LP-9.

[b] The tolerances must comply with the allowable tolerances in Section 39-1.02E, "Aggregate."

[c] Required for HMA Type A, Type B, and RHMA-G if the specified paved thickness is at least 0.15 foot.

[d] Determine maximum theoretical density (California Test 309) at the frequency specified for test maximum density under California Test 375, Part 5 D.
[e] For adjusting the plant controller at the HMA plant.
[f] Report the average of 3 tests from a single split sample.
[g] Modify California Test 304, Part 2.B.2.c: "After compaction in the mechanical compactor, cool to 140 °F ± 5 °F by allowing the briquettes to cool at room temperature for 0.5 hour, then place the briquettes in the oven at 140 °F for a minimum of 2 hours and not more than 3 hours."
[h] Determine the bulk specific gravity of each lab-compacted briquette under California Test 308, Method A, and theoretical maximum specific gravity under California Test 309.
[i] Report only if the adjustment for asphalt binder content target value is less than or equal to ± 0.3 percent from OBC.
[j] Voids in mineral aggregate for RHMA-G must be within this range.

Within the specified reporting time, submit written test results including:

1. Sampling location, quantity, and time
2. Testing results
3. Supporting data and calculations

If test results for any quality characteristic are beyond the action limits in the QCP, take corrective actions. Document the corrective actions taken in the inspection records under Section 39-4.03E, "Records of Inspection and Testing."

Stop production, notify the Engineer in writing, take corrective action, and demonstrate compliance with the specifications before resuming production and placement on the State highway if:

1. A lot's composite quality factor, Q_{FC}, or an individual quality factor, QF_{QCi} for i = 3, 4, or 5, is below 0.90 determined under Section 39-4.03F, "Statistical Evaluation"
2. An individual quality factor, QF_{QCi} for i = 1 or 2, is below 0.75
3. Quality characteristics for which a quality factor, QF_{QCi}, is not determined has 2 consecutive acceptance or quality control tests not in compliance with the specifications

39-4.03D Charts And Records

Record sampling and testing results for quality control on forms provided in the "Quality Control Manual for Hot Mix Asphalt," or on forms you submit with the QCP. The QCP must also include form posting locations and submittal times.

Submit quality control test results using the Department's statistical evaluation program, HMAPay, available at

www.dot.ca.gov/hq/construc/hma/index.htm

39-4.03E Records Of Inspection And Testing

During HMA production, submit in writing a daily:

1. HMA Construction Daily Record of Inspection. Also make this record available at the HMA plant and job site each day.
2. HMA Inspection and Testing Summary. Include in the summary:

2.1. Test forms with the testers' signatures and Quality Control Manager's initials.
2.2. Inspection forms with the inspectors' signatures and Quality Control Manager's initials.
2.3. A list and explanation of deviations from the specifications or regular practices.
2.4. A signed statement by the Quality Control Manager that says:

"It is hereby certified that the information contained in this record is accurate, and that information, tests, or calculations documented herein comply with the specifications of the contract and the standards set forth in the testing procedures. Exceptions to this certification are documented as part of this record."

Retain for inspection the records generated as part of quality control including inspection, sampling, and testing for at least 3 years after final acceptance.

39-4.03F Statistical Evaluation

General

Determine a lot's composite quality factor, QF_C, and the individual quality factors, QF_{QCi}. Perform statistical evaluation calculations to determine these quality factors based on quality control test results for:

1. Aggregate gradation
2. Asphalt binder content
3. Percent of maximum theoretical density

The Engineer grants a waiver and you must use 1.0 as the individual quality factor for percent of maximum theoretical density, QF_{QC5}, for HMA paved in:

1. Areas where the specified paved thickness is less than 0.15 foot
2. Areas where the specified paved thickness is less than 0.20 foot and a 3/4-inch grading is specified and used
3. Dig outs
4. Leveling courses
5. Areas where, in the opinion of the Engineer, compaction or compaction measurement by conventional methods is impeded

Statistical Evaluation Calculations

Use the Variability-Unknown / Standard Deviation Method to determine the percentage of a lot not in compliance with the specifications. The number of significant figures used in the calculations must comply with AASHTO R-11, Absolute Method.

Determine the percentage of work not in compliance with the specification limits for each quality characteristic as follows:

1. Calculate the arithmetic mean ($\bar{X}$) of the test values

$$\overline{X} = \frac{\Sigma x}{n}$$

where:

x = individual test values
n = number of test values

2. Calculate the standard deviation

$$s = \sqrt{\frac{n\,(\Sigma x^2)-(\Sigma x)^2}{n(n-1)}}$$

where:

$\sum(x^2)$ = sum of the squares of individual test values
$(\sum x)^2$ = sum of the individual test values squared
n = number of test values

3. Calculate the upper quality index (Qu)

$$Q_u = \frac{USL - \overline{X}}{s}$$

where:

USL = target value plus the production tolerance or upper specification limit
s = standard deviation
$\overline{X}$ = arithmetic mean

4. Calculate the lower quality index (QL);

$$Q_L = \frac{\overline{X} - LSL}{s}$$

where:

LSL = target value minus production tolerance or lower specification limit
s = standard deviation
$\overline{X}$ = arithmetic mean

5. From the table, Upper Quality Index Q_U or Lower Quality Index Q_L, of this Section 39-4.03F, "Statistical Evaluation", determine P_U ;

where:

P_U = the estimated percentage of work outside the USL.
$P_U = 0$, when USL is not specified.

6. From the table, Upper Quality Index Q_U or Lower Quality Index Q_L, of this Section 39-4.03F, "Statistical Evaluation," determine P_L;

where:

P_L = the estimated percentage of work outside the LSL.
$P_L = 0$, when LSL is not specified.

7. Calculate the total estimated percentage of work outside the USL and LSL, percent defective

   Percent defective = $P_U + P_L$

P_U and P_L are determined from:

P_U or P_L	Upper Quality Index Q_U or Lower Quality Index Q_L												
	Sample Size (n)												
	5	6	7	8	9	10-11	12-14	15-17	18-22	23-29	30-42	43-66	>66
0	1.72	1.88	1.99	2.07	2.13	2.20	2.28	2.34	2.39	2.44	2.48	2.51	2.56
1	1.64	1.75	1.82	1.88	1.91	1.96	2.01	2.04	2.07	2.09	2.12	2.14	2.16
2	1.58	1.66	1.72	1.75	1.78	1.81	1.84	1.87	1.89	1.91	1.93	1.94	1.95
3	1.52	1.59	1.63	1.66	1.68	1.71	1.73	1.75	1.76	1.78	1.79	1.80	1.81
4	1.47	1.52	1.56	1.58	1.60	1.62	1.64	1.65	1.66	1.67	1.68	1.69	1.70
5	1.42	1.47	1.49	1.51	1.52	1.54	1.55	1.56	1.57	1.58	1.59	1.59	1.60
6	1.38	1.41	1.43	1.45	1.46	1.47	1.48	1.49	1.50	1.50	1.51	1.51	1.52
7	1.33	1.36	1.38	1.39	1.40	1.41	1.41	1.42	1.43	1.43	1.44	1.44	1.44
8	1.29	1.31	1.33	1.33	1.34	1.35	1.35	1.36	1.36	1.37	1.37	1.37	1.38
9	1.25	1.27	1.28	1.28	1.29	1.29	1.30	1.30	1.30	1.31	1.31	1.31	1.31
10	1.21	1.23	1.23	1.24	1.24	1.24	1.25	1.25	1.25	1.25	1.25	1.26	1.26
11	1.18	1.18	1.19	1.19	1.19	1.19	1.20	1.20	1.20	1.20	1.20	1.20	1.20
12	1.14	1.14	1.15	1.15	1.15	1.15	1.15	1.15	1.15	1.15	1.15	1.15	1.15
13	1.10	1.10	1.10	1.10	1.10	1.10	1.11	1.11	1.11	1.11	1.11	1.11	1.11
14	1.07	1.07	1.07	1.06	1.06	1.06	1.06	1.06	1.06	1.06	1.06	1.06	1.06
15	1.03	1.03	1.03	1.03	1.02	1.02	1.02	1.02	1.02	1.02	1.02	1.02	1.02
16	1.00	0.99	0.99	0.99	0.99	0.98	0.98	0.98	0.98	0.98	0.98	0.98	0.98
17	0.97	0.96	0.95	0.95	0.95	0.95	0.94	0.94	0.94	0.94	0.94	0.94	0.94
18	0.93	0.92	0.92	0.92	0.91	0.91	0.91	0.91	0.90	0.90	0.90	0.90	0.90
19	0.90	0.89	0.88	0.88	0.88	0.87	0.87	0.87	0.87	0.87	0.87	0.87	0.87
20	0.87	0.86	0.85	0.85	0.84	0.84	0.84	0.83	0.83	0.83	0.83	0.83	0.83
21	0.84	0.82	0.82	0.81	0.81	0.81	0.80	0.80	0.80	0.80	0.80	0.80	0.79
22	0.81	0.79	0.79	0.78	0.78	0.77	0.77	0.77	0.76	0.76	0.76	0.76	0.76
23	0.77	0.76	0.75	0.75	0.74	0.74	0.74	0.73	0.73	0.73	0.73	0.73	0.73
24	0.74	0.73	0.72	0.72	0.71	0.71	0.70	0.70	0.70	0.70	0.70	0.70	0.70
25	0.71	0.70	0.69	0.69	0.68	0.68	0.67	0.67	0.67	0.67	0.67	0.67	0.66
26	0.68	0.67	0.67	0.65	0.65	0.65	0.64	0.64	0.64	0.64	0.64	0.64	0.63
27	0.65	0.64	0.63	0.62	0.62	0.62	0.61	0.61	0.61	0.61	0.61	0.61	0.60
28	0.62	0.61	0.60	0.59	0.59	0.59	0.58	0.58	0.58	0.58	0.58	0.58	0.57
29	0.59	0.58	0.57	0.57	0.56	0.56	0.55	0.55	0.55	0.55	0.55	0.55	0.54
30	0.56	0.55	0.54	0.54	0.53	0.53	0.52	0.52	0.52	0.52	0.52	0.52	0.52
31	0.53	0.52	0.51	0.51	0.50	0.50	0.50	0.49	0.49	0.49	0.49	0.49	0.49
32	0.50	0.49	0.48	0.48	0.48	0.47	0.47	0.47	0.46	0.46	0.46	0.46	0.46
33	0.47	0.48	0.45	0.45	0.45	0.44	0.44	0.44	0.44	0.43	0.43	0.43	0.43
34	0.45	0.43	0.43	0.42	0.42	0.42	0.41	0.41	0.41	0.41	0.41	0.41	0.40
35	0.42	0.40	0.40	0.39	0.39	0.39	0.38	0.38	0.38	0.38	0.38	0.38	0.38
36	0.39	0.38	0.37	0.37	0.36	0.36	0.36	0.36	0.36	0.36	0.36	0.36	0.36
37	0.36	0.35	0.34	0.34	0.34	0.33	0.33	0.33	0.33	0.33	0.33	0.33	0.32
38	0.33	0.32	0.32	0.31	0.31	0.31	0.30	0.30	0.30	0.30	0.30	0.30	0.30
39	0.30	0.30	0.29	0.28	0.28	0.28	0.28	0.28	0.28	0.28	0.28	0.28	0.28
40	0.28	0.25	0.25	0.25	0.25	0.25	0.25	0.25	0.25	0.25	0.25	0.25	0.25
41	0.25	0.23	0.23	0.23	0.23	0.23	0.23	0.23	0.23	0.23	0.23	0.23	0.23
42	0.23	0.20	0.20	0.20	0.20	0.20	0.20	0.20	0.20	0.20	0.20	0.20	0.20
43	0.18	0.18	0.18	0.18	0.18	0.18	0.18	0.18	0.18	0.18	0.18	0.18	0.18
44	0.16	0.15	0.15	0.15	0.15	0.15	0.15	0.15	0.15	0.15	0.15	0.15	0.15
45	0.13	0.13	0.13	0.13	0.13	0.13	0.13	0.13	0.13	0.13	0.13	0.13	0.13
46	0.10	0.10	0.10	0.10	0.10	0.10	0.10	0.10	0.10	0.10	0.10	0.10	0.10
47	0.08	0.08	0.08	0.08	0.08	0.08	0.08	0.08	0.08	0.08	0.08	0.08	0.08
48	0.05	0.05	0.05	0.05	0.05	0.05	0.05	0.05	0.05	0.05	0.05	0.05	0.05
49	0.03	0.03	0.03	0.03	0.03	0.03	0.03	0.03	0.03	0.03	0.03	0.03	0.03
50	0.00	0.00	0.00	0.00	0.00	0.00	0.00	0.00	0.00	0.00	0.00	0.00	0.00

1. If the value of Q_U or Q_L does not correspond to a value in the table, use the next lower value.
2. If Q_U or Q_L are negative values, P_U or P_L is equal to 100 minus the table value for P_U or P_L.

Quality Factor Determination

Determine individual quality factors, QF_{QCi}, using percent defective = $P_U + P_L$ and:

Quality Factors

Quality Factor	Maximum Allowable Percent Defective ($P_U + P_L$)												
	Sample Size (n)												
	5	6	7	8	9	10-11	12-14	15-17	18-22	23-29	30-42	43-66	>66
1.05				0	0	0	0	0	0	0	0	0	0
1.04			0	1	3	5	4	4	4	3	3	3	3
1.03		0	2	4	6	8	7	7	6	5	5	4	4
1.02		1	3	6	9	11	10	9	8	7	7	6	6
1.01	0	2	5	8	11	13	12	11	10	9	8	8	7
1.00	22	20	18	17	16	15	14	13	12	11	10	9	8
0.99	24	22	20	19	18	17	16	15	14	13	11	10	9
0.98	26	24	22	21	20	19	18	16	15	14	13	12	10
0.97	28	26	24	23	22	21	19	18	17	16	14	13	12
0.96	30	28	26	25	24	22	21	19	18	17	16	14	13
0.95	32	29	28	26	25	24	22	21	20	18	17	16	14
0.94	33	31	29	28	27	25	24	22	21	20	18	17	15
0.93	35	33	31	29	28	27	25	24	22	21	20	18	16
0.92	37	34	32	31	30	28	27	25	24	22	21	19	18
0.91	38	36	34	32	31	30	28	26	25	24	22	21	19
0.90	39	37	35	34	33	31	29	28	26	25	23	22	20
0.89	41	38	37	35	34	32	31	29	28	26	25	23	21
0.88	42	40	38	36	35	34	32	30	29	27	26	24	22
0.87	43	41	39	38	37	35	33	32	30	29	27	25	23
0.86	45	42	41	39	38	36	34	33	31	30	28	26	24
0.85	46	44	42	40	39	38	36	34	33	31	29	28	25
0.84	47	45	43	42	40	39	37	35	34	32	30	29	27
0.83	49	46	44	43	42	40	38	36	35	33	31	30	28
0.82	50	47	46	44	43	41	39	38	36	34	33	31	29
0.81	51	49	47	45	44	42	41	39	37	36	34	32	30
0.80	52	50	48	46	45	44	42	40	38	37	35	33	31
0.79	54	51	49	48	46	45	43	41	39	38	36	34	32
0.78	55	52	50	49	48	46	44	42	41	39	37	35	33
0.77	56	54	52	50	49	47	45	43	42	40	38	36	34
0.76	57	55	53	51	50	48	46	44	43	41	39	37	35
0.75	58	56	54	52	51	49	47	46	44	42	40	38	36
	60	57	55	53	52	51	48	47	45	43	41	40	37
	61	58	56	55	53	52	50	48	46	44	43	41	38
Reject	62	59	57	56	54	53	51	49	47	45	44	42	39
	63	61	58	57	55	54	52	50	48	47	45	43	40
	64	62	60	58	57	55	53	51	49	48	46	44	41
Reject Values Greater Than Those Shown Above													

Notes:

1. To obtain a quality factor when the estimated percent outside specification limits from table, "Upper Quality Index Q_U or Lower Quality Index Q_L," does not correspond to a value in the table, use the next larger value.

Compute the composite of single quality factors, QF_C, for a lot using:

$$QF_C = \sum_{i=1}^{5} w_i \, QF_{QC_i}$$

where:

$QF_C =$ the composite quality factor for the lot rounded to 2 decimal places.
$QF_{QCi} =$ the quality factor for the individual quality characteristic.
$w =$ the weighting factor listed in the table HMA Acceptance – QC / QA.
$i =$ the quality characteristic index number in the table HMA Acceptance – QC / QA.

39-4.04 ENGINEER'S QUALITY ASSURANCE

39-4.04A General

The Engineer assures quality by:

1. Reviewing mix designs and proposed JMF
2. Inspecting procedures
3. Conducting oversight of quality control inspection and records
4. Verification sampling and testing during production and paving

39-4.04B Verification Sampling And Testing

General

The Engineer samples:

1. Aggregate to verify gradation
2. HMA to verify asphalt binder content

Verification

For aggregate gradation and asphalt binder content, the ratio of verification testing frequency to the minimum quality control testing frequency is 1:5. The Engineer performs at least 3 verification tests per lot.

Using the t-test, the Engineer compares quality control tests results for aggregate gradation and asphalt binder content with corresponding verification test results. The Engineer uses the average and standard deviation of up to 20 sequential sublots for the comparison. The Engineer uses production start-up evaluation tests to represent the first sublot. When there are less than 20 sequential sublots, the Engineer uses the maximum number of sequential sublots available. The 21st sublot becomes the 1st sublot (n = 1) in the next lot.

The t-value for a group of test data is computed as follows:

$$t = \frac{|\overline{X}_c - \overline{X}_v|}{S_p\sqrt{\frac{1}{n_c} + \frac{1}{n_v}}} \quad \text{and} \quad S_p^2 = \frac{S_c^2(n_c - 1) + S_v^2(n_v - 1)}{n_c + n_v - 2}$$

where:

$n_c =$ Number of quality control tests (2 minimum, 20 maximum).
$n_v =$ Number of verification tests (minimum of 1 required).
$\overline{X}_c =$ Mean of quality control tests.
$\overline{X}_v =$ Mean of verification tests.
$S_p =$ Pooled standard deviation (When $n_v = 1$, $S_p = S_c$).

S_c = Standard deviation of quality control tests.
S_v = Standard deviation of verification tests (when $n_v > 1$).

The comparison of quality control test results and the verification test results is at a level of significance of $\alpha = 0.025$. The Engineer computes t and compares it to the critical t-value, t_{crit}, from:

Critical T-Value

Degrees of freedom (n_c+n_v-2)	t_{crit} (for $\alpha = 0.025$)	Degrees of freedom (n_c+n_v-2)	t_{crit} (for $\alpha = 0.025$)
1	24.452	18	2.445
2	6.205	19	2.433
3	4.177	20	2.423
4	3.495	21	2.414
5	3.163	22	2.405
6	2.969	23	2.398
7	2.841	24	2.391
8	2.752	25	2.385
9	2.685	26	2.379
10	2.634	27	2.373
11	2.593	28	2.368
12	2.560	29	2.364
13	2.533	30	2.360
14	2.510	40	2.329
15	2.490	60	2.299
16	2.473	120	2.270
17	2.458	∞	2.241

If the t-value computed is less than or equal to t_{crit}, quality control test results are verified.

If the t-value computed is greater than t_{crit} and both $\overline{X}_v$ and $\overline{X}_c$ comply with acceptance specifications, the quality control tests are verified. You may continue to produce and place HMA with the following allowable differences:

1. $\left|\overline{X}_v - \overline{X}_c\right| \leq 1.0$ percent for any grading
2. $\left|\overline{X}_v - \overline{X}_c\right| \leq 0.1$ percent for asphalt binder content

If the t-value computed is greater than t_{crit} and the $\left|\overline{X}_v - \overline{X}_c\right|$ for grading and asphalt binder content are greater than the allowable differences, quality control test results are not verified and:

1. The Engineer notifies you in writing.
2. You and the Engineer must investigate why the difference exist.
3. If the reason for the difference cannot be found and corrected, the Engineer's test results are used for acceptance and pay.

39-4.05 ENGINEER'S ACCEPTANCE

39-4.05A Testing

The Engineer samples for acceptance testing and tests for:

HMA Acceptance – QC / QA

Index (i)	Quality Characteristic				Weight -ing Factor (w)	Test Method	HMA Type		
							A	B	RHMA-G
		Aggregate gradation [a]							
	Sieve	3/4"	1/2"	3/8"					
1	1/2"	X [b]	--	--	0.05	CT 202	JMF ± Tolerance [c]		
1	3/8"	--	X	--	0.05				
1	No. 4	--	--	X	0.05				
2	No. 8	X	X	X	0.10				
3	No. 200	X	X	X	0.15				
4	Asphalt binder content (%)				0.30	CT 379 or 382	JMF ± 0.45	JMF ± 0.45	JMF ± 0.5
5	Percent of maximum theoretical density (%) [d, e]				0.40	CT 375	92 – 96	92 – 96	91 – 96
	Sand equivalent (min.) [f]					CT 217	47	42	47
	Stabilometer value (min.) [f, g]					CT 366			
	No. 4 and 3/8" gradings						30	30	--
	1/2" and 3/4" gradings						37	35	23
	Air voids content (%) [f, h]					CT 367	4 ± 2	4 ± 2	Specification ± 2
	Percent of crushed particles coarse aggregate (% min.)					CT 205			
	One fractured face						90	25	--
	Two fractured faces						70	--	90
	Fine aggregate (% min) (Passing No. 4 sieve and retained on No. 8 sieve.) One fractured face						70	20	70
	HMA moisture content (%, max.)					CT 226 or CT 370	1.0	1.0	1.0
	Los Angeles Rattler (% max.)					CT 211			
	Loss at 100 rev.						12	--	12
	Loss at 500 rev.						45	50	45
	Fine aggregate angularity (% min.)					AASHTO T 304, Method A	45	45	45
	Flat and elongated particle (% max. by weight @ 5:1)					ASTM D 4791	Report only	Report only	Report only
	Voids in mineral aggregate (% min.) [i]								(Note j)
	No. 4 grading						17.0	17.0	--
	3/8" grading					LP-2	15.0	15.0	--
	1/2" grading						14.0	14.0	18.0 - 23.0
	3/4" grading						13.0	13.0	18.0 - 23.0
	Voids filled with asphalt (%) [i]								
	No. 4 grading					LP-3	76.0 - 80.0	76.0 - 80.0	Report only
	3/8" grading						73.0 - 76.0	73.0 - 76.0	
	1/2" grading						65.0 - 75.0	65.0 - 75.0	
	3/4" grading						65.0 - 75.0	65.0 - 75.0	
	Dust proportion [i]					LP-4			
	No. 4 and 3/8" gradings						0.9 - 2.0	0.9 – 2.0	Report only
	1/2" and 3/4" gradings						0.6 - 1.3	0.6 – 1.3	

	Smoothness		Section 39-1.12	12-foot straight-edge, must-grind, and PI_0	12-foot straight-edge, must-grind, and PI_0	12-foot straight-edge, must-grind, and PI_0
	Asphalt binder		Various	Section 92	Section 92	Section 92
	Asphalt rubber binder		Various	--	--	Section 92-1.02(C) and Section 39-1.02D
	Asphalt modifier		Various	--	--	Section 39-1.02D
	Crumb rubber modifier		Various	--	--	Section 39-1.02D

Notes:

[a] The Engineer determines combined aggregate gradations containing RAP under Laboratory Procedure LP-9.

[b] "X" denotes the sieves the Engineer considers for the specified aggregate gradation.

[c] The tolerances must comply with the allowable tolerances in Section 39-1.02E, "Aggregate."

[d] The Engineer determines percent of maximum theoretical density if the specified paved thickness is at least 0.15 foot under California Test 375 except the Engineer uses:

1. California Test 308, Method A, to determine in-place density of each density core instead of using the nuclear gauge in Part 4, "Determining In-Place Density By The Nuclear Density Device."
2. California Test 309 to determine maximum theoretical density instead of calculating test maximum density in Part 5, "Determining Test Maximum Density."

[e] The Engineer determines maximum theoretical density (California Test 309) at the frequency specified for Test Maximum Density under California Test 375, Part 5.D.

[f] The Engineer reports the average of 3 tests from a single split sample.

[g] Modify California Test 304, Part 2.B.2.c: "After compaction in the mechanical compactor, cool to 140 °F ± 5 °F by allowing the briquettes to cool at room temperature for 0.5 hour, then place the briquettes in the oven at 140 °F for a minimum of 2 hours and not more than 3 hours."

[h] The Engineer determines the bulk specific gravity of each lab-compacted briquette under California Test 308, Method A, and theoretical maximum specific gravity under California Test 309.

[i] Report only if the adjustment for asphalt binder content target value is less than or equal to ± 0.3 percent from OBC.

[j] Voids in mineral aggregate for RHMA-G must be within this range.

The Engineer determines the percent of maximum theoretical density from the average density of 3 density cores you take from every 750 tons of production or part thereof divided by the maximum theoretical density.

If the specified total paved thickness is at least 0.15 foot and any layer is less than 0.15 foot, the Engineer determines the percent of maximum theoretical density from density cores taken from the final layer measured the full depth of the total paved HMA thickness.

The Engineer stops production and terminates a lot if:

1. The lot's composite quality factor, Q_{FC}, or an individual quality factor, QF_{QCi} for i = 3, 4, or 5, is below 0.90 determined under Section 39-4.03F, "Statistical Evaluation"
2. An individual quality factor, QF_{QCi} for i = 1 or 2, is below 0.75

3. Quality characteristics for which a quality factor, QF_{QCi}, is not determined has 2 consecutive acceptance or quality control tests not in compliance with the specifications

For any single quality characteristic for which a quality factor, QF_{QCi}, is not determined, except smoothness, if 2 consecutive acceptance test results do not comply with specifications:

1. Stop production.
2. Take corrective action.
3. In the Engineer's presence, take samples and split each sample into 4 parts. Test 1 part for compliance with the specifications and submit 3 parts to the Engineer. The Engineer tests 1 part for compliance with the specifications and reserves and stores 2 parts.
4. Demonstrate compliance with the specifications before resuming production and placement on the State highway.

39-4.05B Statistical Evaluation, Determination Of Quality Factors And Acceptance

Statistical Evaluation and Determination of Quality Factors

To determine the individual quality factor, QF_{QCi}, for any quality factor i = 1 through 5 or a lot's composite quality factor, QF_C, for acceptance and payment adjustment, the Engineer uses the evaluation specifications under Section 39-4.03F, "Statistical Evaluation," and:

1. Verified quality control test results for aggregate gradation
2. Verified quality control test results for asphalt binder content
3. The Engineer's test results for percent of maximum theoretical density

Lot Acceptance Based on Quality Factors

The Engineer accepts a lot based on the quality factors determined for aggregate gradation and asphalt binder content, QF_{QCi} for i = 1 through 4, using the total number of verified quality control test result values and the total percent defective ($P_U + P_L$).

The Engineer accepts a lot based on the quality factor determined for maximum theoretical density, QF_{QC5}, using the total number of test result values from density cores and the total percent defective ($P_U + P_L$).

The Engineer calculates the quality factor for the lot, QF_C, which is a composite of weighted individual quality factors, QF_{QCi}, determined for each quality characteristic in the HMA Acceptance – QC / QA table in Section 39-4.05A, "Testing."

The Engineer accepts a lot based on quality factors if:

1. The current composite quality factor, QF_C, is 0.90 or greater
2. Each individual quality factor, QF_{QCi} for i = 3, 4, and 5, is 0.90 or greater
3. Each individual quality factor, QF_{QCi} for i = 1 and 2, is 0.75 or greater

No single quality characteristic test may represent more than the smaller of 750 tons or 1 day's production.

Payment Adjustment

If a lot is accepted, the Engineer adjusts payment with the following formula:

$$PA = \sum_{i=1}^{n} HMACP * w_i * \left[QF_{QCi} * (HMATT - WHMATT_i) + WHMATT_i\right] - (HMACP * HMATT)$$

where:

PA =	Payment adjustment rounded to 2 decimal places.
$HMACP$ =	HMA contract price.
$HMATT$ =	HMA total tons represented in the lot.
$WHMATT_i$ =	Total tons of waived quality characteristic HMA.
QF_{QCi} =	Running quality factor for the individual quality characteristic. QF_{QCi} for i = 1 through 4 must be from verified Contractor's QC results. QF_{QC5} must be determined from the Engineer's results on density cores taken for percent of maximum theoretical density determination.
w =	Weighting factor listed in the HMA acceptance table.
i =	Quality characteristic index number in the HMA acceptance table.

If the payment adjustment is a negative value, the Engineer deducts this amount from payment. If the payment adjustment is a positive value, the Engineer adds this amount to payment.

The 21st sublot becomes the 1st sublot (n = 1) in the next lot. When the 21st sequential sublot becomes the 1st sublot, the previous 20 sequential sublots become a lot for which the Engineer determines a quality factor. The Engineer uses this quality factor to pay for the HMA in the lot. If the next lot consists of less than 8 sublots, these sublots must be added to the previous lot for quality factor determination using 21 to 27 sublots.

39-4.05C Dispute Resolution

For a lot, if you or the Engineer dispute any quality factor, QF_{QCi}, or verification test result, every sublot in that lot must be retested.

Referee tests must be performed under the specifications for acceptance testing.

Any quality factor, QF_{QCi}, must be determined using the referee tests.

For any quality factor, QF_{QCi}, for i = 1 through 5, dispute resolution:

1. If the difference between the quality factors for QF_{QCi} using the referee test result and the disputed test result is less than or equal to 0.01, the original test result is correct.
2. If the difference between the quality factor for QF_{QCi} using the referee test result and the disputed test result is more than 0.01, the quality factor determined from the referee tests supersedes the previously determined quality factor.

39-5 MEASUREMENT AND PAYMENT

39-5.01 MEASUREMENT

The contract item for HMA is measured by weight. The weight of each HMA mixture designated in the Engineer's Estimate must be the combined mixture weight.

If tack coat, asphalt binder, and asphaltic emulsion are paid with separate contract items, their contract items are measured under Section 92, "Asphalts," or Section 94, "Asphaltic Emulsions," as the case may be.

If recorded batch weights are printed automatically, the contract item for HMA is measured by using the printed batch weights, provided:

1. Total aggregate and supplemental fine aggregate weight per batch is printed. If supplemental fine aggregate is weighed cumulatively with the aggregate, the total aggregate batch weight must include the supplemental fine aggregate weight.
2. Total asphalt binder weight per batch is printed.
3. Each truckload's zero tolerance weight is printed before weighing the first batch and after weighing the last batch.
4. Time, date, mix number, load number and truck identification is correlated with a load slip.
5. A copy of the recorded batch weights is certified by a licensed weighmaster and submitted to the Engineer.

The contract item for placing HMA dike is measured by the linear foot along the completed length. The contract item for placing HMA in miscellaneous areas is measured as the in-place compacted area in square yards. In addition to the quantities measured on a linear foot or square yard basis, the HMA for dike and miscellaneous areas are measured by weight.

The contract item for geosynthetic pavement interlayer is measured by the square yard for the actual pavement area covered.

39-5.02 PAYMENT

The contract prices paid per ton for hot mix asphalt as designated in the Engineer's Estimate include full compensation for furnishing all labor, materials, tools, equipment, and incidentals for doing all the work involved in constructing hot mix asphalt, complete in place, as shown on the plans, as specified in these specifications and the special provisions, and as directed by the Engineer.

If HMA is specified to comply with Section 39-4, "Quality Control / Quality Assurance," the Engineer adjusts payment under that section.

Full compensation for the Quality Control Plan and prepaving conference is included in the contract prices paid per ton for hot mix asphalt as designated in the Engineer's Estimate and no additional compensation will be allowed therefor.

Full compensation for performing and submitting mix designs and for Contractor sampling, testing, inspection, testing facilities, and preparation and submittal of results is included in the contract prices paid per ton for HMA as designated in the Engineer's Estimate and no additional compensation will be allowed therefor.

Full compensation for reclaimed asphalt pavement is included in the contract prices paid per ton for HMA as designated in the Engineer's Estimate and no additional compensation will be allowed therefor.

The contract price paid per ton for hot mix asphalt (leveling) includes full compensation for furnishing all labor, materials, tools, equipment, and incidentals for doing all the work involved in hot mix asphalt (leveling), complete in place, as shown on the plans, as specified in these specifications and the special provisions, and as directed by the Engineer.

The State pays for HMA dike at the contract price per linear foot for place HMA dike and by the ton for HMA. The contract prices paid per linear foot for place hot mix asphalt dike as designated in the Engineer's Estimate include full compensation for furnishing all labor, tools, equipment, and incidentals, and for doing all the work involved in placing HMA dike, complete in place, including excavation, backfill, and preparation of the area to receive the dike, as shown on the plans, as specified in these specifications and the special provisions, and as directed by the Engineer.

The State pays for HMA specified to be a miscellaneous area at the contract price per square yard for place hot mix asphalt (miscellaneous area) and per ton for hot mix asphalt. The contract price paid per square yard for place hot mix asphalt (miscellaneous area) includes full compensation for furnishing all labor, tools, equipment, and incidentals, and for doing all the work involved in placing HMA (miscellaneous area) complete in place, including excavation, backfill, and preparation of the area to receive HMA (miscellaneous area), as shown on the plans, as specified in these specifications and the special provisions, and as directed by the Engineer.

If the Quality Control / Quality Assurance construction process is specified, HMA placed in dikes and miscellaneous areas is paid for at the contract price per ton for hot mix asphalt under Section 39-4, "Quality Control / Quality Assurance." Section 39-4.05B, "Statistical Evaluation, Determination of Quality Factors and Acceptance," does not apply to HMA placed in dikes and miscellaneous areas.

If there are no contract items for place hot mix asphalt dike and place hot mix asphalt (miscellaneous area) and the work is specified, full compensation for constructing HMA dikes and HMA (miscellaneous areas) including excavation, backfill, and preparation of the area to receive HMA dike or HMA (miscellaneous area) is included in the contract price paid per ton for the hot mix asphalt designated in the Engineer's Estimate and no separate payment will be made therefor.

The contract price paid per square yard for geosynthetic pavement interlayer includes full compensation for furnishing all labor, materials, tools, equipment, and incidentals, and for doing all the work involved in placing geosynthetic pavement interlayer, complete in place, as shown on the plans, as specified in these specifications and the special provisions, and as directed by the Engineer.

The contract price paid per ton for paving asphalt (binder, geosynthetic pavement interlayer) includes full compensation for furnishing all labor, materials, tools, equipment, and incidentals, and for doing all the work involved in applying paving asphalt (binder, geosynthetic pavement interlayer), complete in place, including spreading sand to cover exposed binder material, as shown on the plans, as specified in these specifications and the special provisions, and as directed by the Engineer.

Full compensation for small quantities of HMA placed on geosynthetic pavement interlayer to prevent displacement during construction is included in the contract price

paid per ton for the HMA being paved over the interlayer and no separate payment will be made therefor.

The contract price paid per ton for tack coat includes full compensation for furnishing all labor, materials, tools, equipment, and incidentals, and for doing all the work involved in applying tack coat, complete in place, as shown on the plans, as specified in these specifications and the special provisions, and as directed by the Engineer.

The Engineer does not adjust payment for increases or decreases in the quantities for tack coat, regardless of the reason for the increase or decrease. Section 4-1.03B, "Increased or Decreased Quantities," does not apply to the items for tack coat.

Full compensation for performing smoothness testing, submitting written and electronic copies of tests, and performing corrective work including applying fog seal coat is included in the contract price paid per ton for the HMA designated in the Engineer's Estimate and no separate payment will be made therefor.

Full compensation for spreading sand on RHMA-G, RHMA-O, and RHMA-O-HB surfaces and for sweeping and removing excess sand is included in the contract price paid per ton for rubberized hot mix asphalt as designated in the Engineer's Estimate and no separate payment will be made therefor.

If the Engineer fails to comply with a specification within a specified time, and if, in the opinion of the Engineer, work completion is delayed because of the failure, the Engineer adjusts payment and contract time under Section 8-1.09, "Right of Way Delays."

If the dispute resolution ITP determines the Engineer's test results are correct, the Engineer deducts the ITP's testing costs from payments. If the ITP determines your test results are correct, the State pays the ITP's testing costs. If, in the Engineer's opinion, work completion is delayed because of incorrect Engineer test results, the Engineer adjusts payment and contract time under Section 8-1.09, "Right of Way Delays."

SECTION 51 CONCRETE STRUCTURES
(Issued 06-05-09)

In Section 51-1.05 in the 11th paragraph, replace the 1st sentence with:

Form panels for exposed surfaces shall be furnished and placed in uniform widths of not less than 3 feet and in uniform lengths of not less than 6 feet, except at the end of continuously formed surfaces where the final panel length required is less than 6 feet.

In Section 51-1.06C in the 11th paragraph, replace the 1st sentence with:

Falsework for box culverts and other structures with decks lower than the roadway pavement and with span lengths of 14 feet or less shall not be released until the last placed concrete has attained a compressive strength of 1,600 psi, provided that curing of the concrete is not interrupted.

In Section 51-1.11 replace the 6th paragraph with:

Construction methods and equipment employed by the Contractor shall conform to the provisions in Section 7-1.02, "Load Limitations."

In Section 51-1.12D replace the 4th paragraph with:

Expanded polystyrene shall be a commercially available polystyrene board. Expanded polystyrene shall have a minimum flexural strength of 35 psi determined in conformance with the requirements in ASTM Designation: C 203 and a compressive yield strength of between 16 and 40 psi at 5 percent compression. Surfaces of expanded polystyrene against which concrete is placed shall be faced with hardboard. Hardboard shall be 1/8 inch minimum thickness, conforming to ANSI A135.4, any class. Other facing materials may be used provided they furnish equivalent protection. Boards shall be held in place by nails, waterproof adhesive, or other means approved by the Engineer.

In Section 51-1.12F replace the 3rd paragraph with:

Type A and AL joint seals shall consist of a groove in the concrete that is filled with field-mixed silicone sealant.

In Section 51-1.12F in the 6th paragraph, replace the table with:

Movement Rating (MR)	Seal Type
MR ≤ 1 inch	Type A or Type B
1 inch < MR ≤ 2 inches	Type B
2 inches < MR ≤ 4 inches	Joint Seal Assembly (Strip Seal)
MR > 4 inches	Joint Seal Assembly (Modular Unit) or Seismic Joint

In Section 51-1.12F(3)(a) replace the 1st and 2nd paragraphs with:

The sealant must consist of a 2-component silicone sealant that will withstand up to ±50 percent movement.

Silicone sealants must be tested under California Test 435 and must comply with the following:

Specification	Requirement
Modulus at 150 percent elongation	8-75 psi
Recovery	21/32 inch max.
Notch Test	Notched or loss of bond 1/4 inch, max.
Water Resistance	Notched or loss of bond 1/4 inch, max.
Ultraviolet Exposure ASTM Designation: G 154, Table X2.1,Cycle 2.	No more than slight checking or cracking.
Cone Penetration	4.5-12.0 mm

In Section 51-1.12F(3)(a) delete the 3rd and 8th paragraphs.

In Section 51-1.12F(3)(a) replace the 10th paragraph with:

A Certificate of Compliance accompanied by a certified test report must be furnished for each batch of silicone sealant in conformance with the provisions in Section 6-1.07, "Certificates of Compliance."

In Section 51-1.12F(3)(b) replace the 2nd paragraph with:

The preformed elastomeric joint seal must conform to the requirements in ASTM D 2628 and the following:

1. The seal must consist of a multichannel, nonporous, homogeneous material furnished in a finished extruded form.
2. The minimum depth of the seal measured at the contact surface must be at least 95 percent of the minimum uncompressed width of the seal as designated by the manufacturer.
3. When tested in conformance with the requirements in California Test 673 for Type B seals, joint seals must provide a movement rating (MR) of not less than that shown on the plans.
4. The top and bottom edges of the joint seal must maintain continuous contact with the sides of the groove over the entire range of joint movement.
5. The seal must be furnished full length for each joint with no more than 1 shop splice in any 60-foot length of seal.
6. The Contractor must demonstrate the adequacy of the procedures to be used in the work before installing seals in the joints.
7. One field splice per joint may be made at locations and by methods approved by the Engineer. The seals are to be manufactured full length for the intended joint, then cut at the approved splice section and rematched before splicing. The Contractor must submit splicing details prepared by the joint seal manufacturer for approval before beginning splicing work.
8. Shop splices and field splices must have no visible offset of exterior surfaces and must show no evidence of bond failure.
9. At all open ends of the seal that would admit water or debris, each cell must be filled to a depth of 3 inches with commercial quality open cell polyurethane foam or closed by other means subject to approval by the Engineer.

In Section 51-1.12F(3)(b) replace the 7th paragraph with:

The joint seal must be installed full length for each joint with equipment that does not twist or distort the seal, elongate the seal longitudinally, or otherwise cause damage to the seal or to the concrete forming the groove.

In Section 51-1.12F(3)(b) in the 11th paragraph, replace the 1st sentence with:

Samples of the prefabricated joint seals, not less than 3 feet in length, will be taken by the Engineer from each lot of material.

In Section 51-1.12H(1) in the 6th paragraph, replace the 4th and 5th sentences with:

Each ply of fabric shall have a breaking strength of not less than 800 pounds per inch of width in each thread direction when 3" x 36" samples are tested on split drum grips. The bond between double plies shall have a minimum peel strength of 20 pounds per inch.

In Section 51-1.12H(1) in the 8th paragraph in the table, replace the hardness (Type A) requirements with:

Hardness (Type A)	D 2240 with 2kg mass.	55 ±5

In Section 51-1.12H(2) in the 1st paragraph in item A, replace the 1st and 2nd sentences with:

The bearings shall consist of alternating steel laminates and internal elastomer laminates with top and bottom elastomer covers. Steel laminates shall have a nominal thickness of 0.075 inch (14 gage).

In Section 51-1.135 replace the 1st paragraph with:

Mortar shall be composed of cementitious material, sand, and water proportioned and mixed as specified in this Section 51-1.135.

In Section 51-1.135 replace the 3rd paragraph with:

The proportion of cementitious material to sand, measured by volume, shall be 1 to 2 unless otherwise specified.

In Section 51-1.17 in 4th paragraph, replace the 3rd sentence with:

The surfaces shall have a profile trace showing no high points in excess of 0.25 inch, and the portions of the surfaces within the traveled way shall have a profile count of 5 or less in any 100 foot section.

Add:

51-1.17A Deck Crack Treatment

The Contractor shall use all means necessary to minimize the development of shrinkage cracks.

The Contractor shall remove all equipment and materials from the deck and clean the surface as necessary for the Engineer to measure the surface crack intensity. Surface crack intensity will be determined by the Engineer after completion of concrete cure, before prestressing, and before the release of falsework. In any 500 square foot portion of deck within the limits of the new concrete deck, should the intensity of cracking be such that there are more than 50 feet of cracks whose width at any location exceeds 0.02 inch, the deck shall be treated with a high molecular weight methacrylate (HMWM) resin system. The area of deck to be treated shall have a width that extends

for the entire width of new deck inside the concrete barriers and a length that extends at least 5 feet beyond the furthest single continuous crack outside the 500 square foot portion, measured from where that crack exceeds 0.02 inch in width, as determined by the Engineer.

Deck crack treatment shall include furnishing, testing, and applying the HMWM resin system, with sand and absorbent material. If grinding is required, deck crack treatment shall take place before grinding.

51-1.17A(1) Submittals

Submit a HMWM resin system placement plan. When HMWM resin is to be applied within 100 feet of a residence, business, or public space including sidewalks under a structure, also submit a public safety plan. Submit plans under Section 5-1.02, "Plans and Working Drawings," of the Standard Specifications. The review time is 15 days.

The HMWM resin system placement plan must include:

1. Schedule of work and testing for each bridge
2. Description of equipment for applying HMWM resin
3. Range of gel time and final cure time for HMWM resin
4. Absorbent material to be used
5. Description of equipment for applying and removing excess sand and absorbent material
6. Procedure for removing HMWM resin from the deck, including equipment
7. Storage and handling of HMWM resin components and absorbent material
8. Disposal of excess HMWM resin and containers

The public safety plan must include:

1. A public notification letter with a list of delivery and posting addresses. The letter must state HMWM resin work locations, dates, times, and what to expect. Deliver the letter to residences and businesses within 100 feet of HMWM resin work locations and to local fire and police officials at least 7 days before starting work. Post the letter at the job site.
2. An airborne emissions monitoring plan prepared and executed by a certified industrial hygienist (CIH) certified in comprehensive practice by the American Board of Industrial Hygiene. The plan must have at least 4 monitoring points including the mixing point, application point, and point of nearest public contact. Monitor airborne emissions during HMWM resin work and submit emissions monitoring results after completing the work.
3. An action plan for protection of the public when airborne emissions levels exceed permissible levels.
4. A copy of the CIH's certification.

If the measures proposed in the safety plan are inadequate to provide for public safety associated with the use of HMWM resin, the Engineer will reject the plan and direct the Contractor to revise the plan. Directions for revisions will be in writing and include detailed comments. The Engineer will notify the Contractor of the approval or rejection of a submitted or revised plan within 15 days of receipt of that plan.

51-1.17A(2) Quality Control and Assurance

Submit samples of HMWM resin components 15 days before use under Section 6-3, "Testing," of the Standard Specifications. Notify the Engineer 15 days before delivery of HMWM resin components in containers over 55 gallons to the job site.

Complete a test area before starting work. Results from airborne emissions monitoring of the test area must be submitted to the Engineer before starting production work.

The test area must:

1. Be approximately 500 square feet
2. Be placed within the project limits outside the traveled way at an approved location
3. Be constructed using the same equipment as the production work
4. Replicate field conditions for the production work
5. Demonstrate proposed means and methods meet the acceptance criteria
6. Demonstrate production work will be completed within the time allowed
7. Demonstrate suitability of the airborne emissions monitoring plan

The test area will be acceptable if:

1. The treated deck surface is tack free and non-oily
2. The sand cover adheres and resists brushing by hand
3. Excess sand and absorbent material has been removed
4. The coefficient of friction is at least 0.35 when tested under California Test 342

51-1.17A(3) Materials

HMWM resin system consists of a resin, promoter, and initiator. HMWM resin must be low odor and comply with the following:

HMWM Resin

Property	Requirement	Test Method
Volatile Content*	30 percent, maximum	ASTM D 2369
Viscosity*	25 cP, maximum, (Brookfield RVT with UL adaptor, 50 RPM at 77°F)	ASTM D 2196
Specific Gravity*	0.90 minimum, at 77°F	ASTM D 1475
Flash Point*	180°F, minimum	ASTM D 3278
Vapor Pressure*	1.0 mm Hg, maximum, at 77°F	ASTM D 323
Tack-free Time	400 minutes, maximum, at 25°C	Specimens prepared per California Test 551
PCC Saturated Surface-Dry Bond Strength	3.5 MPa, minimum at 24 hours and 21 ± 1°C	California Test 551

* Test must be performed before adding initiator.

Sand for abrasive sand finish must:

1. Be commercial quality dry blast sand
2. Have at least 95 percent pass the No. 8 sieve and at least 95 percent retained on the No. 20 sieve when tested under California Test 205

Absorbent material must be diatomaceous earth, abrasive blast dust, or substitute recommended by the HMWM resin supplier and approved by the Engineer.

51-1.17A(4) Construction

HMWM resin system applied by machine must be:

1. Combined in volumetric streams of promoted resin to initiated resin by static in-line mixers
2. Applied without atomization

HMWM resin system may be applied manually. Limit the quantity of resin mixed for manual application to 5 gallons at a time.

Prepare the area to be treated by abrasive blasting. Curing compound, surface contaminants, and foreign material must be removed from the bridge deck surface. Sweep the deck surface clean after abrasive blasting and blow loose material from cracks using high-pressure air.

The deck surface must be dry when abrasive blast cleaning is performed. When abrasive blast cleaning within 10 feet of public traffic, remove dust and residue from abrasive blast cleaning using a vacuum attachment operating concurrently with blasting equipment . If the deck surface becomes contaminated before placing HMWM, abrasive blast clean the contaminated area and sweep the deck clean.

The deck must be dry before applying HMWM resin. The concrete surface must be at least 50 degrees F and at most 100 degrees F. Relative humidity must be expected to be at most 85 percent during the work shift.

Thoroughly mix all components of the HMWM resin system. Apply HMWM resin to the deck surface within 5 minutes of mixing at approximately 90 sq ft per gallon. The Engineer determines the exact application rate. The resin gel time must be between 40 and 90 minutes. HMWM resin that thickens during application is rejected.

Spread the HMWM resin system uniformly. Completely cover surfaces to be treated and fill all cracks. Redistribute excess resin using squeegees or brooms within 10 minutes of application. For textured or grooved deck surfaces, excess resin must be removed from the texture indentations.

Apply the abrasive sand finish of at least 2 pounds per square yard or until saturation as determined by the Engineer no sooner than 20 minutes after applying resin. Apply absorbent material before opening lane to traffic. Remove excess sand and absorbent material by vacuuming or power sweeping.

Traffic or equipment will be allowed on the overlay after the Engineer has determined:

1. The treated deck surface is tack free and non-oily
2. The sand cover adheres and resists brushing by hand
3. Excess sand and absorbent material has been removed
4. No material will be tracked beyond limits of treatment by traffic

In Section 51-1.18C replace the 2nd paragraph with:

When Class 2 surface finish (gun finish) is specified, ordinary surface finish shall first be completed. The concrete surfaces shall then be abrasive blasted to a rough texture and thoroughly washed down with water. While the washed surfaces are damp, but not wet, a finish coating of machine applied mortar, approximately 1/4 inch thick, shall be applied in not less than 2 passes. The coating shall be pneumatically applied and shall consist of either (1) sand, cementitious material, and water mechanically mixed prior to its introduction to the nozzle, or (2) premixed sand and cementitious material to which water is added prior to its expulsion from the nozzle. The use of admixtures shall be subject to the approval of the Engineer as provided in Section 90, "Portland Cement Concrete." Unless otherwise specified, supplementary cementitious materials will not be required. The proportion of cementitious material to sand shall be not less than one to 4, unless otherwise directed by the Engineer. Sand shall be of a grading suitable for the purpose intended. The machines shall be operated and the coating shall be applied in conformance with standard practice. The coating shall be firmly bonded to the concrete surfaces on which it is applied.

In Section 51-1.18C replace the 5th paragraph with:

When surfaces to be finished are in pedestrian undercrossings, the sand shall be silica sand and the cementitious material shall be standard white portland cement.

In Section 51-1.23, add:

Full compensation for deck crack treatment, including the public safety plan, shall be considered as included in the contract price paid per cubic yard for structural concrete, bridge, and no additional compensation will be allowed therefor.

SECTION 55 STEEL STRUCTURES
(Issued 05-02-08

In Section 55-1.05 replace the 3rd paragraph with:

Construction methods and equipment employed by the Contractor shall conform to the provisions in Section 7-1.02, "Load Limitations."

In Section 55-2.01 in the 5th paragraph in the table, replace the CVN impact value for Grade HPS 50W with:

Grade HPS 50W* (4 inches and under in thickness)	20 at 10 °F

In Section 55-3.05 replace the 1st paragraph with:

Surfaces of bearing and base plates and other metal surfaces that are to come in contact with each other or with ground concrete surfaces or with asbestos sheet packing shall be flat to within 1/32-inch tolerance in 12 inches and to within 1/16-inch

tolerance overall. Surfaces of bearing and base plates and other metal bearing surfaces that are to come in contact with preformed fabric pads, elastomeric bearing pads, or mortar shall be flat to within 1/8-inch tolerance in 12 inches and to within 3/16-inch tolerance overall.

In Section 55-3.10 in the 1st paragraph, replace item B with:

B. Internal threads shall conform to the requirements in ASTM Designation: A 563.

In Section 55-3.19 replace the 3rd paragraph with:

Immediately before setting bearing assemblies or masonry plates directly on ground concrete surfaces, the Contractor shall thoroughly clean the surfaces of the concrete and the metal to be in contact and shall apply a coating of nonsag polysulfide or polyurethane caulking conforming to the requirements in ASTM Designation: C 920 to contact areas to provide full bedding.

In Section 55-3.19 replace the 5th paragraph with:

Mortar to be placed below masonry plates or bearing plates of the bearing assemblies and in anchor bolt sleeves or canisters shall conform to the provisions in Section 51-1.135, "Mortar," except that the proportion of cementitious material to sand shall be 1:3.

In Section 55-4.01 in the 1st paragraph, replace item D with:

D. To determine the pay quantities of galvanized metal, the weight to be added to the calculated weight of the base metal for the galvanizing will be determined from the table of weights of zinc coatings specified in ASTM Designation: A 153/A 153M.

SECTION 64 PLASTIC PIPE
(Issued 06-05-09)

In Section 64-1.02 replace the 5th paragraph with:

HDPE compounds used in the manufacture of corrugated polyethylene pipe and fittings shall comply with AASHTO M 294 except that the mix shall contain not less than 2 nor greater than 4 percent well dispersed carbon black. HDPE compounds used in the manufacture of ribbed profile wall polyethylene pipe shall comply with ASTM F 894 except that Type E ultraviolet stabilizers shall not be allowed and carbon black shall be well dispersed in an amount not less than 2 percent nor greater than 4 percent.

Manufacturers of corrugated polyethylene pipe shall:

1. Participate in the National Transportation Product Evaluation Control Program (NTPEP) for each plant supplying corrugated polyethylene pipe and fittings for the project.
2. Conduct and maintain a quality control program under NTPEP.
3. Submit a copy to the Engineer of manufacturing plant audits and NTPEP test results from the current cycle of NTPEP testing for all pipe diameters supplied.

Type D corrugated polyethylene pipe is not allowed. Corrugated polyethylene pipe greater than 60 inches in nominal diameter is not allowed.

In Section 64-1.05 replace the 1st paragraph with:

Excavation, backfill, and shaped bedding shall comply with Section 19-3, "Structure Excavation and Backfill," except the following:

1. At locations where pipe is to be backfilled with concrete, the backfill shall comply with Section 64-1.06, "Concrete Backfill."
2. Corrugated polyethylene pipe that is greater than 48 inches in nominal diameter but not exceeding 60 inches in nominal diameter shall be backfilled with either controlled low strength material under the special provisions or slurry cement backfill under Section 19-3.062, "Slurry Cement Backfill."
3. Where cementitious or flowable backfill is used for structure backfill, the backfill shall be placed to a level not less than 12 inches above the crown of the pipe.

In Section 64-1.06 replace the 1st paragraph with:

At locations where pipe is to be backfilled with concrete as shown on the plans, the concrete backfill shall be constructed of minor concrete or Class 4 concrete conforming to the provisions in Section 90, "Portland Cement Concrete." Minor concrete shall contain not less than 380 pounds of cementitious material per cubic yard. The concrete to be used will be designated in the contract item or shown on the plans.

In Section 64-1.06 replace the 3rd paragraph with:

The surface of the concrete backfill shall be broomed with a heavy broom to produce a uniform rough surface if hot mix asphalt is to be placed directly thereon.

SECTION 73 CONCRETE CURBS AND SIDEWALKS
(Issued 06-05-09)

In Section 73-1.01 in the 2nd paragraph, replace item 2 with:

2. Minor concrete shall contain not less than 463 pounds of cementitious material per cubic yard except that when extruded or slip-formed curbs are constructed using 3/8-inch maximum size aggregate, minor concrete shall contain not less than 505 pounds of cementitious material per cubic yard.

In Section 73-1.06 replace the 15th paragraph with:

Where hot mix asphalt or portland cement concrete pavements are to be placed around or adjacent to manholes, pipe inlets or other miscellaneous structures in sidewalk, gutter depression, island paving, curb ramps or driveway areas, the structures shall not be constructed to final grade until after the pavements have been constructed for a reasonable distance on each side of the structures.

SECTION 75 MISCELLANEOUS METAL
(Issued 06-05-09)

In Section 75-1.03 replace the 13th paragraph with:

Concrete anchorage devices shall be mechanical expansion or resin capsule types installed in drilled holes or cast-in-place insert types. The anchorage devices shall be selected from the Department's Pre-Qualified Products List. The qualification requirements for concrete anchorage devices may be obtained from the Pre-Qualified Products List Web site.

The anchorage devices shall be a complete system, including threaded studs, hex nuts, and cut washers. Thread dimensions for externally threaded concrete anchorage devices prior to zinc coating shall conform to the requirements in ASME Standard: B1.1 having Class 2A tolerances or ASME Standard: B1.13M having Grade 6g tolerances. Thread dimensions for internally threaded concrete anchorage devices shall conform to the requirements in ASTM A 563.

In Section 75-1.03 replace the 18th paragraph with:

Mechanical expansion anchors shall, when installed in accordance with the manufacturer's instructions and these specifications and tested in conformance with the requirements in California Test 681, withstand the application of a sustained tension test load of at least the following values for at least 48 hours with a movement not greater than 0.035 inch:

Stud Diameter (inches)	Sustained Tension Test Load (pounds)
*3/4	5,000
5/8	4,100
1/2	3,200
3/8	2,100
1/4	1,000

* Maximum stud diameter permitted for mechanical expansion anchors.

Resin capsule anchors shall, when installed in accordance with the manufacturer's instructions and these specifications and tested in conformance with the requirements in

California Test 681, withstand the application of a sustained tension test load of at least the following values for at least 48 hours with a movement not greater than 0.010 inch:

Stud Diameter (inches)	Sustained Tension Test Load (pounds)
1-1/4	31,000
1	17,900
7/8	14,400
3/4	5,000
5/8	4,100
1/2	3,200
3/8	2,100
1/4	1,000

At least 25 days before use, the Contractor shall submit one sample of each resin capsule anchor per lot to the Transportation Laboratory for testing. A lot of resin capsule anchors is 100 units, or fraction thereof, of the same brand and product name.

In Section 75-1.03 replace the 20th paragraph with:

A Certificate of Compliance for concrete anchorage devices shall be furnished to the Engineer in conformance with the provisions in Section 6-1.07, "Certificates of Compliance."

In Section 75-1.03 replace the 24th paragraph with:

Sealing compound, for caulking and adhesive sealing, shall be a polysulfide or polyurethane material conforming to the requirements in ASTM Designation: C 920, Type S, Grade NS, Class 25, Use O.

In Section 75-1.035 in the 3rd paragraph, replace the 1st sentence with:

Cables shall be 3/4 inch preformed, 6 x 19, wire strand core or independent wire rope core (IWRC), galvanized in conformance with the requirements in Federal Specification RR-W-410, right regular lay, manufactured of improved plow steel with a minimum breaking strength of 23 tons.

In Section 75-1.035 in the 4th paragraph, replace item C with:

C. Nuts shall conform to the requirements in ASTM Designation: A 563 including Appendix X1, except lubrication is not required.

In Section 75-1.035 replace the 12th paragraph with:

Concrete for filling cable drum units shall conform to the provisions in Section 90-10, "Minor Concrete," or at the option of the Contractor, may be a mix with 3/8-inch maximum size aggregate and not less than 675 pounds of cementitious material per cubic yard.

In Section 75-1.05 replace the 6th paragraph with:

Galvanizing of iron and steel hardware and nuts and bolts, when specified or shown on the plans, shall conform to the requirements in ASTM Designation: A 153/A 153M, except whenever threaded studs, bolts, nuts, and washers are specified to conform to the requirements in ASTM Designation: A 307, A 325, A 449, A 563, or F 436 and zinc coating is required, they shall be hot-dip zinc coated or mechanically zinc coated in conformance with the requirements in the ASTM Designations. Unless otherwise specified, galvanizing shall be performed after fabrication.

In Section 75-1.05 replace the 8th paragraph with:

Tapping of nuts or other internally threaded parts to be used with zinc coated bolts, anchor bars or studs shall be done after galvanizing and shall conform to the requirements for thread dimensions and overtapping allowances in ASTM Designation: A 563.

SECTION 85 PAVEMENT MARKERS
(Issued 07-31-07)

In Section 85-1.06 replace the 6th paragraph with:

Pavement markers shall not be placed on new hot mix asphalt surfacing or seal coat until the surfacing or seal coat has been opened to public traffic for a period of not less than 7 days when hot melt bituminous adhesive is used, and not less than 14 days when epoxy adhesive is used.

In Section 85-1.06 in the 14th paragraph, replace the 2nd sentence with:

Cleaning shall be done by blast cleaning on all surfaces regardless of age or type, except that blast cleaning of clean, new hot mix asphalt and clean, new seal coat surfaces will not be required when hot melt bituminous adhesive is used.

ATTACHMENT A

SUMMARY OF ENVIRONMENTAL PERMITS, CONDITIONS, AND MITIGATION

SAN LUIS OBISPO COUNTY
DEPARTMENT OF PUBLIC WORKS
Paavo Ogren, Director

County Government Center, Room 207 • San Luis Obispo CA 93408 • (805) 781-5252
Fax (805) 781-1229 email address: pwd@co.slo.ca.us

ENVIRONMENTAL PERMIT SUMMARY FORM

Date: May 15, 2009

To: Ryan Chapman

From: Katie Drexhage

Subject: **Environmental Review & Permit Status for the** Nipomo Safe Routes to School Project (ED06-048/300362)

The environmental review and regulatory permit processes for the above referenced project are complete. The following is a summary of the environmental requirements for the project:

Permit	Status	Attachments
CEQA Review	Categorical Exemption (1-21-09)	X
NEPA Review	Categorical Exclusion (5-6-09)	X
Coastal Permit	Not applicable, outside of Coastal Zone	
CZMA	Not applicable	
CDFG	1602, #2009-0020-R4 (expires 12-31-2013)(4-3-09)	X
USACOE 404	Not applicable, not below ordinary high water	
NMFS ESA	Not applicable, no listed species effects	
USFWS ESA	Not applicable, no listed species effects	
RWQCB 401	Not applicable, no 404 permit required	
NPDES	Not applicable, less than 1 acre disturbance	

Summary Project Timeframe
Based on the below work windows, the basic work window for this project is from **4/15 to 10/31**.

PM Initials	**Special Environmental Conditions**
	Please notify the Environmental Programs Director if the project description changes.
PRE - CONSTRUCTION	All work shall be conducted between the dates of April 15 and October 31. After October 31, construction activities may be extended on a day-to-day basis by contacting DFG.
PRE - CONSTRUCTION	If construction is scheduled to occur during the nesting season of February 15 to August 1, preconstruction surveys shall be conducted by a qualified biologist to determine the presence of nesting birds in the riparian zone. If active raptor nests are found to be present, construction within 100 yards of the active nests shall be delayed until the qualified biologist determines that the young have fledged. If active nests of non-raptor species are found to be present, construction within 25 yards of the active non-raptor nests shall be delayed until the qualified biologist determines that the young have fledged.
PRE - CONSTRUCTION	Within 48 hours prior to construction, the project site shall be surveyed for California red-legged frogs by a qualified biologist. If any California red-legged frogs are found, work shall not start until the U.S. Fish and Wildlife Service has been contacted and has given approval for work to continue. If any California red-legged frogs are found, Mike Hill of DFG shall be contacted within 24 hours at (805) 471-7222.
PRE - CONSTRUCTION	When known, the Operator shall provide a construction/work schedule to DFG (mail, or fax to (559) 243-4594), with reference to Agreement 2009-0020-R4 prior to beginning any activities covered by this Agreement. The Operator shall also notify DFG upon the completion of the activities covered by this Agreement.
PRE - CONSTRUCTION	Within the stream corridors, the Operator shall identify the upstream and downstream limits of the minimum required work area, the project footprint, and other encroachments into the stream including any required vehicle access corridors. These limits shall be identified by the Operator prior to construction. All areas within the identified work area limits shall be considered Environmentally Sensitive Areas (ESA) and shall not be disturbed. Flagging/fencing shall be maintained in good repair for the duration of the project.
PRE - CONSTRUCTION	Prior to construction, a qualified biologist shall conduct training sessions to familiarize all construction personnel with identification of southern steelhead and California red-legged frogs, their habitat, general provisions and protections afforded by the Endangered Species Act, measures implemented to protect southern steelhead and California red-legged frogs, and a review of the project boundaries. During construction, a qualified biologist shall monitor construction activities including, but not limited to, excavation of the sites, installation and removal of diversion structures, and sediment/erosion control devices
PRE - CONSTRUCTION	All equipment operators shall be trained in the procedures to be taken should an accident occur. Prior to the commencement of work, the Operator shall provide DFG with a plan allowing for prompt and effective response to any accidental spills. All workers shall be informed of the importance of preventing spills and of the appropriate measures to take should a spill occur.
PRE - /DURING CONSTRUCTION	The Operator shall immediately notify DFG of the discovery of any rare, threatened, or endangered species prior to and/or during construction.
DURING CONSTRUCTION	Work shall be conducted when water has ceased to flow in the stream channel.
DURING CONSTRUCTION	To minimize the possibility of injuring California red-legged frogs and other wildlife, herbaceous and small shrubby vegetation within the project boundaries that would be disturbed by subsequent project activities shall be removed by hand prior to the use of heavy equipment or machinery.
DURING CONSTRUCTION	If necessary, tree removal or pruning may occur during the nesting season provided a qualified biologist verifies that no active nests are located within the project area.

DURING CONSTRUCTION	The contractor shall not dump any litter or construction debris within the riparian/stream zone. All such debris and waste shall be picked up daily and properly disposed of at an appropriate site. During all activities at project work sites, all trash that may attract predators shall be properly contained, removed from the work site, and disposed of regularly. Following construction, all trash and construction debris shall be removed from work areas.
DURING CONSTRUCTION	No pets shall be permitted to be at the site during construction.
DURING CONSTRUCTION	The Operator shall retain as many trees and brush as feasible, emphasizing shade producing and bank stabilizing trees and brush.
DURING CONSTRUCTION	The Operator shall use project designs and access points that minimize riparian disturbance without affecting less stable areas, which may increase the risk of channel instability.
DURING CONSTRUCTION	Disturbance or removal of vegetation shall not exceed the minimum necessary to complete operations.
DURING CONSTRUCTION	All invasive exotic plant species shall be removed from the project site. Any Vinca, Cape or German ivy, Castor bean, Arundo, or other exotic plant species shall be bagged and appropriately disposed of in a landfill. Exotic species shall not be used in composting or left otherwise exposed in or around the project site. Heavy equipment and other machinery shall be inspected for the presence of undesirable species prior to on-site use and cleaned to reduce the risk of introducing exotic plant species into the project site.
DURING CONSTRUCTION	All heavy equipment used at the project site shall be maintained be in proper working condition and shall be free of drips and leaks of coolant and petroleum products. No equipment shall be used on the site unless such equipment is free of leaks and drips.
DURING CONSTRUCTION	Staging/storage areas for equipment, materials, fuels, lubricants and solvents, shall be located outside of the stream's high water channel and associated riparian area. Stationary equipment such as motors, pumps, generators, compressors, and welders, located within the dry portion of the stream channel or adjacent to the stream shall be positioned over drip-pans. Vehicles and equipment shall be moved out of the normal high water area of the stream prior to refueling and lubricating.
DURING CONSTRUCTION	All fueling and maintenance of vehicles, other equipment, and staging/storage areas shall be located at least 50 feet from any riparian habitat or water body. The Operator shall ensure contamination of habitat does not occur during such operations.
DURING CONSTRUCTION	All activities performed in or near a stream shall have absorbent materials designed for spill containment and cleanup at the activity site for use in case of an accidental spill. Any equipment or vehicles driven and/or operated within or adjacent to the stream shall be checked and maintained daily, to prevent leaks or materials that if introduced to water could be deleterious to aquatic life.
DURING CONSTRUCTION	Debris, soil, silt, bark, rubbish, creosote-treated wood, raw cement/concrete or washings thereof, asphalt, paint or other coating material, oil or other petroleum products, or any other substances which could be hazardous to aquatic life, resulting from Project-related activities, shall be prevented from contaminating the soil and/or entering the "Waters of the State". Any of these materials, placed within or where they may enter a stream or lake, by Operator or any party working under contract, or with the permission of the Operator, shall be removed immediately.
DURING CONSTRUCTION	Poured concrete shall be excluded from the wetted channel for a period of 30 days after it is poured. During that time the poured concrete shall be kept moist, and run-off from the concrete shall not be allowed to enter a live stream. Commercial sealants (e.g., Deep Seal, Elasto-Deck BT Reservoir Grade) may be applied to the poured concrete surface where difficulty in excluding water flow for a long period may occur. If sealant is used, water shall be excluded from the site until the sealant is dry.

DURING CONSTRUCTION	Effective erosion and sediment control measures shall be in place at all times during construction. Construction within the 5-year flood plain shall not begin until all temporary erosion and sediment controls are installed throughout the project site. Erosion and sediment control measures shall be inspected not less than once weekly and shall be maintained in proper functioning condition throughout construction. If erosion and sediment control measures are found to be in need of repair or not in proper working order for any reason, construction shall immediately cease until the measures are repaired.
DURING CONSTRUCTION	Upon project completion, all exposed soil present in and around the project site shall be permanently stabilized within seven (7) calendar days using generally accepted erosion and sediment control measures.
DURING CONSTRUCTION	Adequate erosion control supplies shall be kept at all restoration sites to ensure sediment is kept out of water bodies. Erosion control measures shall be utilized throughout all phases of operation where sediment run-off from exposed slopes threatens to enter "Waters of the State". At no time shall silt laden run-off be allowed to enter the stream or be placed where it may enter the stream.
DURING CONSTRUCTION	Silty/turbid water from the excavation and/or project activities shall not be discharged into the stream, lake, or into storm drains. Such water shall be pumped into a holding facility or into a settling pond located in flat stable areas outside of the stream channel, or sprayed over a large area outside the stream channel to allow for natural filtration of sediments. At no time shall turbid water from the settling ponds be allowed to enter back into the stream channel until water is clear of silt.
DURING CONSTRUCTION	A copy of the DFG Streambed Alteration Agreement shall be kept on-site at all times during construction and until the project is complete.
DURING CONSTRUCTION	DFG requires that the Operator: • Immediately notify DFG in writing if monitoring reveals that any of the protective measures were not implemented during the period indicated in this program, or if it anticipates that measures shall not be implemented within the time period specified. • Immediately notify DFG if any of the protective measures are not providing the level of protection that is appropriate for the impact that is occur.
DURING CONSTRUCTION	Spread of invasive species will be avoided by ensuring that all imported fill be specified to be weed free and clean of deleterious materials.
DURING CONSTRUCTION	To reduce the potential for project activities to introduce or spread invasive species, any imported soil will be specified to be weed free.
DURING CONSTRUCTION	Any soil exported from the project site may be contaminated with invasive weeds and will be disposed of at a certified, local landfill.
DURING CONSTRUCTION	The roots and stumps of willows that must be removed will be cut in place, treated with Rodeo™, and left in place to aid in bank stabilization and erosion control.
DURING CONSTRUCTION	Sound control shall conform to the provisions of Section 7-1.01I, "Sound Control Requirements," of the Standard Specifications and these special provisions.
DURING CONSTRUCTION	Work shall be conducted between the hours of 8:00 A.M. to 5:00 P.M. no work will be allowed outside of these times. This requirement in no way relieves the Contractor from responsibility for complying with local ordinances regulating noise level.
DURING CONSTRUCTION	Noise level requirements shall apply to all equipment on or related to the job, including but not limited to trucks, transit mixers or transient equipment. The use of loud sound signals shall be avoided in favor of light warnings except those required by safety laws for the protection of personnel.
DURING CONSTRUCTION	A qualified biologist will provide intermittent monitoring during project activities near the forks of Haystack Creek to aid in the implementation of avoidance measures.
DURING CONSTRUCTION	If any cultural materials are observed during the course of construction, we will halt construction until the find can be evaluated by a professional archaeologist.

DURING CONSTRUCTION	The number of access routes, number and size of staging areas, and the total area of the work site activity shall be limited to the minimum necessary to complete the restoration action. Any equipment entering the active stream (e.g., in the process of installing a coffer dam) shall be preceded by an individual on foot to displace wildlife and prevent them from being crushed.
DURING CONSTRUCTION	The Operator shall provide a detailed revegetation plan to DFG for approval. Done by EPD on 4/15/09.
DURING CONSTRUCTION	The Operator agrees to provide DFG access to the project site at any time to ensure compliance with the terms, conditions, and provisions of this Agreement.
DURING/POST CONSTRUCTION	If the Operator needs more time to complete the authorized activity, the work period may be extended on a day-to-day basis by contacting Mr. Mike Hill at (805) 471-7222 or the Fresno office at (559) 243-4014, extension 240.
POST CONSTRUCTION	The following reports shall be submitted to the DFG: • If necessary, a Pre-Construction biological survey and report if sensitive species are found • A Final Project Report to be submitted within 30 days after the project construction is completed. The final report shall summarize the project construction, including any problems relating to the protective measures of this Agreement. "Before and after" photo documentation of the project site shall be required. • An Annual Report with respect to revegetation shall be submitted within 30 days of the end of each calendar year for three (3) years. Photo documentation shall be part of the Annual Report. • A Project Report submitted within 30 days of April 3 (the date by which the DFG agreement was signed). The report to include an assessment of the effectiveness of the mitigation features that were implemented and recommendations, if any, for improving the effectiveness of mitigation measures. The Operator's monitoring of the revegetation effort shall commence immediately following the first planting. Monitoring of revegetation shall continue for two (2) years after seeding and planting the site. "Before and after" photo documentation of the Project site shall be required.
POST CONSTRUCTION	The oak trees will be replaced at a 4:1 mitigation ratio (1-gallon plants). Revegetation activities will be conducted onsite and will be maintained for 5 years by County Public Works staff.
POST CONSTRUCTION	The willows will be replaced at a 2:1 mitigation ratio (willow cuttings). Revegetation activities will be conducted onsite and will be maintained for 5 years by County Public Works staff.
POST CONSTRUCTION	The project site shall be monitored and maintained for five (5) years following completion of construction to ensure a survival rate of at least 70 percent for replanted vegetation. Restoration shall include the revegetation of stripped or exposed areas. All planting shall be done at an appropriate time to take advantage of the winter rainy season.
POST CONSTRUCTION	In addition to maintaining revegetation activities for 5 years, County Public Works staff will ensure that the project area remains weed free. Additionally, no fill material will be imported that may contain weeds (for additional detail regarding the revegetation and monitoring plan, refer to the attached Habitat Mitigation and Monitoring Plan prepared for the California Department of Fish and Game).
POST CONSTRUCTION	Any disturbed banks shall be fully restored upon completion of construction. Revegetation shall be done using locally obtained native species. Planting techniques can include seed casting, hydroseeding, or live planting methods.

ATTACHMENT B

CALIFORNIA DEPARTMENT OF FISH AND GAME
STREAMBED ALTERATION AGREEMENT

AGREEMENT

California Fish and Game Code Section 1602
Stream Alteration Agreement No. 2009-0020-R4
Haystack Creek
San Luis Obispo County

Parties:

California Department of Fish and Game
Central Region
1234 East Shaw Avenue
Fresno, California 93710

Dave Flynn, Deputy Director
County of San Luis Obispo
Department of Public Works
County Government Center, Room 207
San Luis Obispo, California 93408

WHEREAS:

1. Mr. Dave Flynn (hereinafter referred to as the "Operator"), on February 11, 2009, notified ("Notification" No. 2009-0020-R4) the Department of Fish and Game ("Department") of their intent to divert or obstruct the natural flow of, or change the bed or banks of, or use materials from Haystack Creek in San Luis Obispo County, waters over which the Department asserts jurisdiction pursuant to Division 2, Chapter 6 of the California Fish and Game Code.

2. The Operator may not commence any activity that is subject to Fish and Game Code Sections 1600 et seq., until the Department has found that such Project shall not substantially adversely affect an existing fish or wildlife resource or until the Department's proposals, or the decisions of a panel of arbitrators, have been incorporated into such projects.

3. Fish and Game Code Sections 1600 et seq., make provisions for the negotiation of agreements regarding the delineation and definition of appropriate activities, Project modifications and/or specific measures necessary to protect fish and wildlife resources.

4. The Department has determined that without the mitigative features identified in this Agreement, the activities proposed in the Notification could substantially adversely affect fish and wildlife.

NOW THEREFORE, IT IS AGREED THAT:

1. The receipt of this document ("Agreement"), by the Operator, satisfies the Department's requirement to notify the Operator of the existence of an existing fish and wildlife resource that may be substantially adversely affected by the Project that is described in the Notification.

2. The contents of this Agreement constitute the Department's proposals as to measures necessary to protect fish and wildlife resources, and satisfy the Department's requirement to submit these proposals to the Operator.

3. The signature of the Operator's representative on this Agreement constitutes the Operator's commitment to incorporate the Department's proposals into the Project described in the Notification.

4. This Agreement does not exempt the Operator from complying with all other applicable local, State and Federal law, or other legal obligations.

5. This Agreement, alone, does not constitute or imply the approval or endorsement of a Project, or of specific Project features, by the Department of Fish and Game, beyond the Department's limited scope of responsibility, established by Code Sections 1600 et seq. This Agreement does not therefore assure concurrence, by the Department, with the issuance of permits from this or any other agency. Independent review and recommendations shall be provided by the Department as appropriate on those projects where local, State or Federal permits or environmental reports are required.

6. This Agreement does not authorize the "take" (defined in Fish and Game Code Section 86 as hunt, pursue, catch, capture or kill; or attempt to hunt, pursue, catch, capture, or kill) of State-listed threatened or endangered species. If the Operator, in the performance of the agreed work, discovers the presence of a listed species in the Project work area, work shall stop immediately. The Operator shall not resume activities authorized by this Agreement until such time as valid "take" permits are obtained from the Department pursuant to Fish and Game Code Sections 2081(a) and 2081(b) as appropriate.

7. To the extent that provisions of this Agreement provide for the diversion of water, they are agreed to with the understanding that Operator possesses the legal right to so divert such water.

8. To the extent that the provisions of this Agreement provide for activities that require the Operator to trespass on another owner's property, they are agreed to with the understanding that the Operator possesses the legal right to so trespass.

9. To the extent that the provisions of this Agreement provide for activities that are subject to the authority of other public agencies, said activities are agreed to with the understanding that all appropriate permits and authorizations shall be obtained prior to commencing agreed activities.

10. All provisions of this Agreement remain in force throughout the term of the Agreement. Any provision of the Agreement may be amended at any time, provided such amendment is agreed to in writing by both parties. Mutually approved amendments become part of the original Agreement and are subject to all previously negotiated provisions. The Agreement may be terminated by either party, subject to 30 days written notification.

11. The Operator shall provide a copy of the Agreement to the Project supervisors and all contractors and subcontractors. Copies of the Agreement shall be available at work sites during all periods of active work and shall be presented to Department personnel upon demand.

12. The Operator agrees to provide the Department access to the Project site at any time to ensure compliance with the terms, conditions, and provisions of this Agreement.

13. The Operator and any contractor or subcontractor, working on activities covered by this Agreement, are jointly and separately liable for compliance with the provisions of this Agreement. Any violation of the provisions of this Agreement is cause to stop all work immediately until the problem is reconciled. Failure to comply with the provisions and requirements of this Agreement may result in prosecution.

14. The Operator assumes responsibility for the restoration of any fish and wildlife habitat which may be impaired or damaged either directly or, incidental to the Project, as a result of failure to properly implement or complete the mitigative features of this Agreement, or from activities which were not included in the Operator's Notification.

15. It is understood that the Department enters into this Agreement for purposes of establishing protective features for fish and wildlife, in the event that a Project is implemented. The decision to proceed with the Project is the sole responsibility of the Operator, and is not required by this Agreement. It is agreed that all liability and/or incurred costs, related to or arising out of the Operator's Project and the fish and wildlife protective conditions of this Agreement, remain the sole responsibility of the Operator. The Operator agrees to hold harmless and defend the Department of Fish and Game against any related claim made by any party or parties for personal injury or other damage.

16. The terms, conditions, and provisions contained herein constitute the limit of activities agreed to and resolved by this Agreement. The signing of this Agreement does not imply that the Operator is precluded from doing other activities at the site. However, activities not specifically agreed to and resolved by this Agreement are subject to separate notification pursuant to Fish and Game Code Sections 1600 et seq.

California Environmental Quality Act (CEQA) Compliance: In approving this Agreement, the Department is independently required to assess the applicability of CEQA. The features of this Agreement shall be considered as part of the overall Project description.

The Department, as a CEQA Responsible Agency, shall make findings and submit a Notice of Determination to the State Clearinghouse upon signing this Agreement.

Project Location: The work authorized by this Agreement will occur within or adjacent to Haystack Creek in San Luis Obispo County, California. More specifically, work will occur in the stream channel at two (2) locations, approximately 200 feet from the intersection of Tefft and Beechnut Streets, east of State Route 101 in the community of Nipomo in San Luis Obispo County, California (Township 11N, Range 14E, MDB&M) (Figure 1). Unless changes are submitted and approved by the Department, the Project shall be built in the location indicated on the maps/drawings that were submitted with the Notification.

Project Description: The Operator's Notification includes Fish and Game Notification Form FG2023, maps and other submitted information. The Notification comprises the Operator's Project description, and it is used as the basis for establishing the protective provisions that are included in this Agreement. The proposed Project would install two (2) footbridges over Haystack Creek when surface water has ceased to flow in the creek. The upper bank would be excavated and concrete abutments and wing walls would be constructed to support the 12-feet wide bridge deck. Three (3) coast live oak trees and two (2) non-native trees (1 peach and 1 palm) would be removed from the Project site and five (5) willows would be trimmed to allow access to the site. Erosion and sediment control practices would be implemented upon completion of construction. The Project is needed to provide pedestrian traffic across the creek. Any changes or additions to the Project as described in the Notification shall require additional consultation and protective provisions. The Department's CEQA Determination is based upon the Operator's commitment to full implementation of the provisions of this Agreement.

The following bulleted activities are authorized by this Agreement:

- **Excavate a portion of the stream bank at two locations to install concrete abutments and wing walls and construct two 12-foot wide footbridges over Haystack Creek.**

- **Remove three (3) coast live oak trees and two (2) non-native trees, trim willows, and install erosion and sediment control practices at the site.**

Plant and Animal Species of Concern: This Agreement is intended to minimize and mitigate adverse impacts to the wildlife resources that may occupy this area of Haystack Creek, the unnamed tributary, and adjacent habitat. Special-status species that could potentially be impacted are California red-legged frog (*Rana aurora draytonii*), as well as other birds, mammals, fish, reptiles, amphibians, invertebrates and plants that comprise the local ecosystem.

PROVISIONS:

General

1. Agreed activities within the streams may commence after protective features are implemented. This Agreement shall remain in effect until December 31, 2013. If the Project is

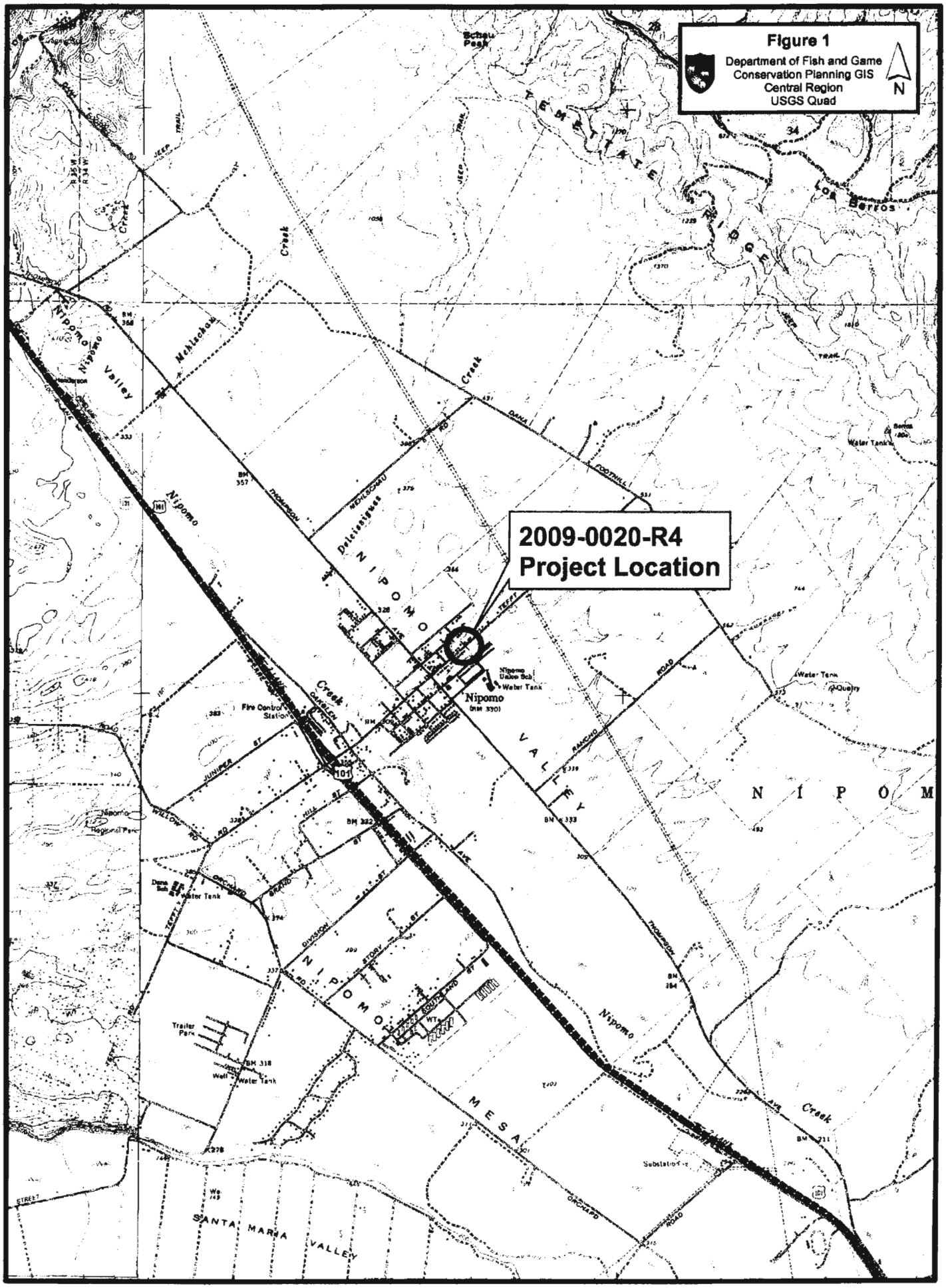
Figure 1
Department of Fish and Game
Conservation Planning GIS
Central Region
USGS Quad
N
2009-0020-R4
Project Location
Nipomo
Nipomo Union Sch
Water Tank
Fire Control Station
Nipomo Valley
Nipomo Creek
Mehlschau Creek
Deleissigues Creek
Los Berros
TEMETATE RIDGE
NIPOMO VALLEY
NIPOMO MESA
SANTA MARIA VALLEY
Trailer Park
Water Tank
Substation
Quarry
Nipomo Regional Park
101
34

not completed prior to the expiration date defined above, the Operator shall contact the Department to negotiate a new expiration date and any new requirements.

2. When known, the Operator shall provide a construction/work schedule to the Department (mail, or fax to (559) 243-4594), with reference to Agreement 2009-0020-R4 prior to beginning any activities covered by this Agreement. The Operator shall also notify the Department upon the completion of the activities covered by this Agreement.

3. Prior to starting any activity within the stream, all workers shall have received training from the Operator on the contents of this Agreement, the resources at stake, and the legal consequences of non-compliance.

Flagging/Fencing

4. Within the stream corridors, the Operator shall identify the upstream and downstream limits of the minimum required work area, the Project footprint, and other encroachments into the stream including any required vehicle access corridors. These limits shall be identified by the Operator prior to construction. All areas within the identified work area limits shall be considered Environmentally Sensitive Areas (ESA) and shall not be disturbed. Flagging/fencing shall be maintained in good repair for the duration of the Project.

Listed/Sensitive Species

5. This Agreement does not allow for the "take," or "incidental take," of any State- or Federal-listed threatened or endangered species.

6. The Operator affirms that no "take" of listed species will occur as a result of this Project and will take prudent measures to ensure that all "take" is avoided. The Operator acknowledges that they fully understand that they do not have State "incidental take" authority. If any State- or Federal-listed threatened or endangered species occur within the proposed work area or could be impacted by the work proposed, and thus "taken" as a result of Project activities, the Operator is responsible for obtaining and complying with required State and Federal threatened and endangered species permits or other written authorization before proceeding with this Project.

7. Liability for any "take," or "incidental take," of such listed species remains the separate responsibility of the Operator for the duration of the Project.

8. The Operator shall immediately notify the Department of the discovery of any such rare, threatened, or endangered species prior to and/or during construction.

GENERAL MEASURES FOR PROTECTION OF BIOLOGICAL RESOURCES

9. All work shall be conducted between the dates of April 15 and October 31. After October 31, construction activities may be extended on a day-to-day basis by contacting Mr. Mike Hill at

(805) 471-7222 or the Central Region office at (559) 243-4014, extension 240. No construction activities shall occur following the first significant rainfall after October 31. For purposes of this Agreement, "significant rainfall" is defined as rainfall totaling one-quarter of one inch (1/4 inch) of rain in any 24-hour period.

10. If construction is scheduled to occur during the nesting season of February 15 to August 1, preconstruction surveys shall be conducted by a qualified biologist to determine the presence of nesting birds in the riparian zone. If active raptor nests are found to be present, construction within 100 yards of the active nests shall be delayed until the qualified biologist determines that the young have fledged. If active nests of non-raptor species are found to be present, construction within 25 yards of the active non-raptor nests shall be delayed until the qualified biologist determines that the young have fledged.

11. The contractor shall not dump any litter or construction debris within the riparian/stream zone. All such debris and waste shall be picked up daily and properly disposed of at an appropriate site. During all activities at Project work sites, all trash that may attract predators shall be properly contained, removed from the work site, and disposed of regularly. Following construction, all trash and construction debris shall be removed from work areas.

12. Building materials and/or construction equipment shall not be stockpiled or stored where they could be washed into the water or where they will cover aquatic or riparian vegetation.

13. The number of access routes, number and size of staging areas, and the total area of the work site activity shall be limited to the minimum necessary to complete the restoration action. Any equipment entering the active stream (e.g., in the process of installing a coffer dam) shall be preceded by an individual on foot to displace wildlife and prevent them from being crushed.

14. Installation of bridges, culverts, or other structures shall be such that water flow is not impaired and upstream or downstream passage of fish is assured at all times. Bottoms of temporary culverts shall be placed at or below stream channel grade.

15. All habitat improvements shall be done in accordance with techniques in the *California Salmonid Stream Habitat Restoration Manual.* The most current version of the manual is available at: http://www.dfg.ca.gov/habitats.

California red-legged frogs (*Rana aurora draytonii*)

To avoid any potential for negative impacts to listed species, the following measures shall be implemented:

16. The Project site has been identified as an area that is potentially inhabited by a threatened species, the California red-legged frog. The Operator is required to comply with all applicable

State and Federal laws, including the California and Federal Endangered Species Acts. This Agreement does not authorize the "take" of any State- or Federal- listed species. Liability for any "take" or "incidental take" of such listed species remains the responsibility of the Operator for the duration of the Project. Any unauthorized "take" of such listed species may result in prosecution and nullification of the Agreement.

17. Prior to construction, a qualified biologist shall conduct training sessions to familiarize all construction personnel with identification of southern steelhead and California red-legged frogs, their habitat, general provisions and protections afforded by the Endangered Species Act, measures implemented to protect southern steelhead and California red-legged frogs, and a review of the Project boundaries. During construction, a qualified biologist shall monitor construction activities including, but not limited to, excavation of the sites, installation and removal of diversion structures, and sediment/erosion control devices.

18. To minimize the possibility of injuring California red-legged frogs and other wildlife, herbaceous and small shrubby vegetation within the Project boundaries that would be disturbed by subsequent Project activities shall be removed by hand prior to the use of heavy equipment or machinery. All trash shall be removed from the site daily to avoid attracting potential predators to the site. No pets shall be permitted to be at the site during construction.

19. Within 48 hours prior to construction, the Project site shall be surveyed for California red-legged frogs by a qualified biologist. If any California red-legged frogs are found, work shall not start until the U.S. Fish and Wildlife Service has been contacted and has given approval for work to continue. If any California red-legged frogs are found, the Department of Fish and Game shall be contacted within 24 hours at (805) 471-7222.

20. Any disturbed banks shall be fully restored upon completion of construction. Revegetation shall be done using locally obtained native species. Planting techniques can include seed casting, hydroseeding, or live planting methods using the techniques in Part XI of the California Salmonid Stream Habitat Restoration Manual. The most current version of the manual is available at: http://www.dfg.ca.gov/habitats.

RIPARIAN VEGETATION

21. The Operator shall retain as many trees and brush as feasible, emphasizing shade producing and bank stabilizing trees and brush.

22. The Operator shall use Project designs and access points that minimize riparian disturbance without affecting less stable areas, which may increase the risk of channel instability.

23. Disturbance or removal of vegetation shall not exceed the minimum necessary to complete operations. To allow access to the sites, willow trees in the Project area may be cut at or within 6 inches of the ground with the roots left in place and undisturbed.

24. All invasive exotic plant species shall be removed from the Project site. Any Vinca, Cape or German ivy, Castor bean, Arundo, or other exotic plant species shall be bagged and appropriately disposed of in a landfill. Exotic species shall not be used in composting or left otherwise exposed in or around the Project site. Heavy equipment and other machinery shall be inspected for the presence of undesirable species prior to on-site use and cleaned to reduce the risk of introducing exotic plant species into the Project site.

HAZARDS AND HAZARDOUS MATERIALS

25. All heavy equipment used at the Project site shall be maintained be in proper working condition and shall be free of drips and leaks of coolant and petroleum products. No equipment shall be used on the site unless such equipment is free of leaks and drips.

26. Staging/storage areas for equipment, materials, fuels, lubricants and solvents, shall be located outside of the stream's high water channel and associated riparian area. Stationary equipment such as motors, pumps, generators, compressors, and welders, located within the dry portion of the stream channel or adjacent to the stream shall be positioned over drip-pans. Vehicles and equipment shall be moved out of the normal high water area of the stream prior to refueling and lubricating.

27. All fueling and maintenance of vehicles, other equipment, and staging/storage areas shall be located at least 50 feet from any riparian habitat or water body. The Operator shall ensure contamination of habitat does not occur during such operations.

28. All equipment operators shall be trained in the procedures to be taken should an accident occur. Prior to the commencement of work, the Operator shall provide the Department with a plan allowing for prompt and effective response to any accidental spills. All workers shall be informed of the importance of preventing spills and of the appropriate measures to take should a spill occur.

29. All activities performed in or near a stream shall have absorbent materials designed for spill containment and cleanup at the activity site for use in case of an accidental spill. Any equipment or vehicles driven and/or operated within or adjacent to the stream shall be checked and maintained daily, to prevent leaks or materials that if introduced to water could be deleterious to aquatic life.

30. Debris, soil, silt, bark, rubbish, creosote-treated wood, raw cement/concrete or washings thereof, asphalt, paint or other coating material, oil or other petroleum products, or any other substances which could be hazardous to aquatic life, resulting from Project-related activities, shall be prevented from contaminating the soil and/or entering the "Waters of the State". Any of these materials, placed within or where they may enter a stream or lake, by Operator or any party working under contract, or with the permission of the Operator, shall be removed immediately.

WATER QUALITY

31. Work shall be conducted when water has ceased to flow in the stream channel.

32. Poured concrete shall be excluded from the wetted channel for a period of 30 days after it is poured. During that time the poured concrete shall be kept moist, and run-off from the concrete shall not be allowed to enter a live stream. Commercial sealants (e.g., Deep Seal, Elasto-Deck BT Reservoir Grade) may be applied to the poured concrete surface where difficulty in excluding water flow for a long period may occur. If sealant is used, water shall be excluded from the site until the sealant is dry.

33. Effective erosion and sediment control measures shall be in place at all times during construction. Construction within the 5-year flood plain shall not begin until all temporary erosion and sediment controls are installed throughout the Project site. Erosion and sediment control measures shall be inspected not less than once weekly and shall be maintained in proper functioning condition throughout construction. If erosion and sediment control measures are found to be in need of repair or not in proper working order for any reason, construction shall immediately cease until the measures are repaired.

34. Upon Project completion, all exposed soil present in and around the Project site shall be permanently stabilized within seven (7) calendar days using generally accepted erosion and sediment control measures.

35. Adequate erosion control supplies shall be kept at all restoration sites to ensure sediment is kept out of water bodies. Erosion control measures shall be utilized throughout all phases of operation where sediment run-off from exposed slopes threatens to enter "Waters of the State". At no time shall silt laden run-off be allowed to enter the stream or be placed where it may enter the stream.

36. Silty/turbid water from the excavation and/or Project activities shall not be discharged into the stream, lake, or into storm drains. Such water shall be pumped into a holding facility or into a settling pond located in flat stable areas outside of the stream channel, or sprayed over a large area outside the stream channel to allow for natural filtration of sediments. At no time shall turbid water from the settling ponds be allowed to enter back into the stream channel until water is clear of silt.

SITE RESTORATION

37. The Operator shall provide a detailed revegetation plan to the Department for approval. At a minimum, the plan shall provide for replacing all disturbed oak trees and restoring any disturbed wetland areas with appropriate native wetland species. Oak trees shall be replaced at a ratio of not less than 4:1 with oak seedlings planted at upland locations at or near the site. Any

willows trimmed or cut during the Project shall be replaced at a ratio of not less than 2:1 using locally obtaining willow cuttings.

38. The Project site shall be monitored and maintained for five (5) years following completion of construction to ensure a survival rate of at least 70 percent for replanted vegetation. If a 70 percent success rate is not realized at the end of five (5) years, additional planting shall be required and monitoring and maintenance shall be continued until the 70 percent success rate is achieved. At the end of the five (5) year monitoring period, the applicant shall provide a written report to the Department describing the number and species of trees and other plants planted, the survival rate of the vegetation, and any remedial measures necessary. Restoration shall include the revegetation of stripped or exposed areas. All planting shall be done at an appropriate time to take advantage of the winter rainy season.

GENERAL MEASURES

39. If the Operator needs more time to complete the authorized activity, the work period may be extended on a day-to-day basis by contacting Mr. Mike Hill at (805) 471-7222 or the Fresno office at (559) 243-4014, extension 240.

40. A copy of this Agreement shall be kept on-site at all times during construction and until the Project is complete.

41. If in the opinion of the Department, conditions arise, or change, in such a manner as to be considered deleterious to the stream or wildlife, operations shall cease until corrective measures approved by the Department are implemented.

42. To modify, amend, or renew the Agreement beyond the expiration date, a written request for a renewal must be submitted to the Department (Stream Alteration Program, 1234 East Shaw Avenue, Fresno, California 93710) for consideration prior to the Agreement expiration date. Fees for modifications, amendments, and renewals can be obtained at www.dfg.ca.gov/1600 or by phone at (559) 243-4014, extension 230. Modifications, amendments, and renewals of the original Agreement are issued at the discretion of the Department.

MONITORING AND REPORTING PROGRAM (MRP):

PURPOSE

The purpose of the MRP is to ensure that the protective measures required by the Department are properly implemented, and to monitor the effectiveness of those measures.

OBLIGATIONS OF THE OPERATOR

The Operator shall have primary responsibility for monitoring compliance with all protective measures included as "Provisions" in this Agreement. Protective measures must be implemented within the time periods indicated in the Agreement and the program described below. The Operator shall submit the following Reports to the Department:

- A construction schedule (Provision 2).

- If necessary, a Pre-Construction biological survey and report if sensitive species are found (Provision 19).

- Revegetation Plan (Provision 37).

- A Final Project Report to be submitted within 30 days after the Project construction is completed. The final report shall summarize the Project construction, including any problems relating to the protective measures of this Agreement. "Before and after" photo documentation of the Project site shall be required.

- An Annual Report with respect to revegetation shall be submitted within 30 days of the end of each calendar year for three (3) years. Photo documentation shall be part of the Annual Report.

- A Project Report submitted within 30 days of each anniversary date of the Department representative's signature on this Agreement. The report to include an assessment of the effectiveness of the mitigation features that were implemented and recommendations, if any, for improving the effectiveness of mitigation measures. The Operator's monitoring of the revegetation effort shall commence immediately following the first planting. Monitoring of revegetation shall continue for two (2) years after seeding and planting the site. "Before and after" photo documentation of the Project site shall be required.

In addition to the above monitoring and reporting requirements, the Department requires as part of the MRP that the Operator:

- Immediately notify the Department in writing if monitoring reveals that any of the protective measures were not implemented during the period indicated in this program, or if it anticipates that measures shall not be implemented within the time period specified.

- Immediately notify the Department if any of the protective measures are not providing the level of protection that is appropriate for the impact that is occurring, and recommendations, if any, for alternative mitigation measures.

VERIFICATION OF COMPLIANCE:

43. The Department shall verify compliance with management compliance measures to ensure the accuracy of the Operator's monitoring and reporting efforts. The Department may, at its sole discretion, review relevant Project documents maintained by the Operator, interview the Operator's employees and agents, inspect the Project area, and take other actions to assess compliance with or effectiveness of management compliance measures for the Project.

CONCURRENCE:

APPROVED BY THE CALIFORNIA DEPARTMENT OF FISH AND GAME

on 4-6, 2009.

Jeffrey R. Single, Ph.D.
Regional Manager, Central Region

ACKNOWLEDGMENT

The undersigned acknowledges receipt of this Agreement and, by signing, accepts and agrees to comply with all terms and conditions contained herein. The undersigned also acknowledges that adequate funding shall be made available to implement the measures required by this Agreement.

By: Dave Flynn
Dave Flynn

Date: March 30, 2009

ATTACHMENT C

NEPA CATEGORICAL EXCLUSION DETERMINATION AND CONDITIONS OF ENVIRONMENTAL REVIEW

Memorandum

Flex your power!
Be energy efficient!

To: John Smida,
Local Assistance Engineer

Date: May 6, 2009

File: 05-SLO-0-CR
SR2SF-5949 (109)
Nipomo Safe Routes to
School Project

Cathy Stettler, Environmental Coordinator
From: **DEPARTMENT OF TRANSPORTATION**
District 5 Environmental Stewardship Branch

Subject: Transmittal of NEPA Categorical Exclusion Determination and Conditions of Environmental Review

The Local Assistance Environmental Stewardship Branch has completed review of all required studies prepared in support of the above-referenced pedestrian path project located in the community of Nipomo, proposed by the County of San Luis Obispo Public Works Department. Enclosed you will find a copy of the signed Categorical Exclusion (CE) Determination form for this project. The project as proposed would consist of construction of sidewalk, a retaining wall, a flashing crosswalk, asphalt-concrete multi-use path, and two footbridges over Haystack Creek. The project is located near Nipomo Elementary School along Thompson Avenue, Price Street and Beechnut Avenue. Work within the creek banks will be restricted to periods when the creek is dry and no equipment will be used in the creek.

No significant environmental consequences are anticipated with this project as described, providing the following avoidance and minimization measures are included in the project. The measures provided below should be included in the PS&E package for the project.

Cultural Resources:

1. **The project as proposed does not have the potential to affect cultural resources, and no further studies are warranted. However, in the event that cultural materials are encountered during project construction, work shall cease until a qualified archaeologist can assess the unanticipated discovery in accordance with 36 CFR 800. The County shall also contact Caltrans immediately to report the find.**

Biological Resources:

2. **Spread of invasive species will be avoided by ensuring that all imported fill be specified to be weed free and clean of deleterious materials.**

3. **Any soil exported from the project site may be contaminated with invasive weeds and shall be disposed of at a certified landfill.**
4. **Post project soil stabilization techniques, including hydro-seeding with a seed mix of locally occurring native species, will minimize potential for invasive species to become established.**
5. **In addition to maintaining revegetation activities, County Public Works staff shall ensure that the project area remains weed free. Additionally, any soil that may be imported for revegetation efforts shall be specified to be weed-free.**
6. **Tree removal or pruning should be scheduled outside of the bird nesting season. If necessary, tree removal or pruning may occur during the nesting season provided a qualified biologist verifies that no active nests are located within the project area. If active nests are found within the project area, work in the area shall cease until young birds have fledged and the nests are abandoned.**
7. **Oak trees shall be replaced onsite at a 4:1 ratio (1-gallon plants) and willows shall be replaced onsite at a 2:1 ratio (willow cuttings).**

No further NEPA environmental review is needed for the project as proposed. However, if prior to construction, any new species are listed as federally endangered or threatened, or if critical habitat is designated, then the project may require additional biological investigation to ensure that the project complies with the requirements of the Federal Endangered Species Act. Additionally, if any changes are made to the project description and/or the limits of the project, the County of San Luis Obispo Public Works Department must notify the Local Assistance Engineer and the Environmental Stewardship Branch so we may make a determination whether additional studies are warranted.

Caltrans is now required to complete a Re-validation Form when federally funded projects move to the next major federal phase (i.e. Right-of-way, Construction). This is required in order to ensure that the project hasn't changed since the original NEPA determination was made. Please notify the Environmental Stewardship Branch when the County is ready to transition to the next phase.

Please transmit a copy of the signed CE Determination form and a copy of this Conditions Memo and Avoidance and Minimization Measures to San Luis Obispo County Public Works Department. If you have any questions please give me a call at ext. 3797.

Enclosure: CE Determination

cc: San Luis Obispo County PWD

Email cc: Kelda Wilson
Tom Edell
Gary Ruggerone

P:/env/estettle/local assist/SLO/Nipomo Safe Routes to School/CE memo to J Smida.doc

CATEGORICAL EXEMPTION/ CATEGORICAL EXCLUSION DETERMINATION FORM

05-SLO-0-CR	N/A	N/A	SR2SF-5949 (109)
Dist.-Co.-Rte. (or Local Agency)	P.M/P.M.	E.A. (State project)	Federal-Aid Project No. (Local project)/ Proj. No.

PROJECT DESCRIPTION: (Briefly describe project, purpose, location, limits, right-of-way requirements, and activities involved.)

The County of San Luis Obispo Department of Public Works, with funding from the Federal Highway Administration through the Safe Routes to School Program, proposes a sidewalk construction project near Nipomo Elementary School. The project site is located at the intersection of Thompson Avenue and Price Street, south of Tefft Street in the Community of Nipomo, San Luis Obispo County. The project would include construction of a sidewalk along the south side of Price Street and the east side of Thompson Avenue for ½ of a block. A flashing crosswalk would be installed across Thompson at Price Street. A 10-foot wide AC multi-use path would be constructed along the Beechnut Street alignment from Dana Street to E. Chestnut Street, and include two footbridges over the north and south forks of Haystack Creek. A sidewalk would also be constructed along the easterly side of Beechnut from Dana to Price Streets. A retaining wall would be constructed along a section of Beechnut adjacent to the Senior Center parking lot. No parking would be lost as a result of the project. No equipment would access either fork of Haystack Creek.

CEQA COMPLIANCE (for State Project only)

Based on an examination of this proposal, supporting information, and the attachments (see 14 CCR 15300 et seq.):

- ☐ This project qualifies for exemption under Class ___ (14 CCR 15300 et seq.) because it does not impact environmental resources of hazardous or critical concern where designated, precisely mapped, and officially adopted pursuant to law.
- ☐ There will not be a significant cumulative effect of this project and successive projects of the same type in the same place, over time.
- ☐ There is no reasonable possibility that this project will have a significant effect on the environment due to unusual circumstances.
- ☐ This project does not damage scenic resources within a state-designated or eligible scenic highway.
- ☐ This project is not located on a site included on a list compiled pursuant to Gov. Code § 65962.5 (Cortese List).
- ☐ This project does not cause a substantial adverse change in the significance of a historical resource.

N/A

CALTRANS CEQA DETERMINATION

☐ Exempt by Statute (PRC 21080(b); 14 CCR 15260 et seq.)

Based on an examination of this proposal, supporting information, and the above attachments, find that pursuant to:

☐ Categorically Exempt Class ___ (PRC 21084; 14 CCR 15300 et seq.)

☐ Categorically Exempt General Rule exemption (This project does not fall within an exempt class, but it can be seen with certainty that there is no possibility that the activity may have a significant effect on the environment (14 CCR 15061(b)(3))

Print Name: Environmental Branch Chief		Print Name: Project Manager/DLA Engineer	
Signature	Date	Signature	Date

NEPA COMPLIANCE

In accordance with 23 CFR 771.117, and based on an examination of this proposal and supporting information, the State has determined that this project:

- does not individually or cumulatively have a significant impact on the environment as defined by NEPA and is excluded from the requirements to prepare an Environmental Assessment (EA) or Environmental Impact Statement (EIS), and
- has considered unusual circumstances pursuant to 23 CFR 771.117(b) (http://www.fhwa.dot.gov/hep/23cfr771.htm - sec.771.117).

In non-attainment or maintenance areas for Federal air quality standards, the project is either exempt from all conformity requirements, or conformity analysis has been completed pursuant to 42 USC 7506(c) and 40 CFR 93.

CALTRANS NEPA DETERMINATION

☒ **Section 6004:** The State has been assigned, and hereby certifies that it has carried out, the responsibility to make this determination pursuant to Chapter 3 of Title 23, United States Code, Section 326 and a Memorandum of Understanding (MOU) dated June 7, 2007, executed between the FHWA and the State. The State has determined that the project is a Categorical Exclusion under:

- 23 CFR 771.117(c): activity (c)(3)
- 23 CFR 771.117(d): activity (d)(___)
- Activity ___ listed in the MOU between FHWA and the State

☐ **Section 6005:** Based on an examination of this proposal and supporting information, the State has determined that the project is a CE under Section 6005 of 23 U.S.C. 327.

for Gary Ruggerone		Mike Giuliano	
Print Name: Environmental Branch Chief		Print Name: Project Manager/DLA Engineer	
Chuck Cesena	5/6/09		5/6/09
Signature	Date	Signature	Date

Briefly list environmental commitments on continuation sheet. Reference additional information, as appropriate (e.g., air quality studies, documentation of conformity exemption, FHWA conformity determination if Section 6005 project; §106 commitments; §4(f); §7 results; Wetlands Finding; Floodplain Finding; additional studies; and design conditions). **Revised September 15, 2008**

The footbridges shall be designed so as not to obstruct flood flows. The footbridges would be pre-fabricated offsite and would span the creek. The abutments would be cast-in-place outside of the creek banks. The only work that would occur within either fork would be associated with vegetation removal. All work within the creek banks would be restricted to periods when the creek is dry. All sidewalk and curb returns would be ADA compliant. Approximately 660 cubic yards of soil would be exported from the site. Soil would be exported to a local landfill. The project has been reviewed to ensure compliance with federal regulations.

Floodplains: Haystack Creek is within a 100-year floodplain that runs through an existing urban area of Nipomo. A Floodplain Study Report, Location Hydraulic Study Form, and Summary Floodplain Encroachment Report were prepared for the project. There would be no longitudinal encroachment to the floodplain or significant impacts on natural and beneficial floodplain values as a result of the project.

Cultural Resources: A Historic Property Survey Report was prepared for the project. The HPSR documents that the project as proposed does not have the potential to affect historic properties under Section 106 of the National Historic Preservation Act and that the requirements of 36 CFR 800 have been fulfilled. Caltrans has made a finding of No Historic Properties Affected and no further studies are warranted. In the event cultural material is encountered during construction, work shall cease until a qualified archaeologist can assess the unanticipated discovery in accordance with the Programmatic Agreement, and the Caltrans Environmental Planning Branch shall be notified immediately.

Biological Resources: A Natural Environment Study – Minimal Impacts, was prepared for the project. No habitat for any federally listed species was identified within the project area and there are no known occurrences of federally listed species; therefore no impacts are expected to occur to species protected under Section 7 of the Federal Endangered Species Act. There are no wetlands within the project limits; therefore the project is in compliance with Executive Order 11990 – Protection of Wetlands. The project could have impacts on nesting birds and could result in spread of invasive species. The following avoidance measures shall be implemented to ensure compliance with Executive Order 13112 – Invasive Species, and the Migratory Bird Treaty Act.

Invasive Species

1. *Spread of invasive species will be avoided by ensuring that all imported fill be specified to be weed free and clean of deleterious materials.*

2. *Any soil exported from the project site may be contaminated with invasive weeds and shall be disposed of at a certified, local landfill.*

3. *Post project soil stabilization techniques, including hydro-seeding with a seed mix of locally occurring native species, will minimize potential for invasive species to become established.*

4. *In addition to maintaining revegetation activities, County Public Works staff shall ensure that the project area remains weed free. Additionally, any soil that may be imported for revegetation efforts shall be specified to be weed-free.*

Nesting Birds

5. *Tree removal or pruning should be scheduled outside of the bird nesting season. If necessary, tree removal or pruning may occur during the nesting season provided a qualified biologist verifies that no active nests are located within the project area. If active nests are found within the project area, work in the area shall cease until young birds have fledged and the nests are abandoned.*

6. *Oak trees shall be replaced onsite at a 4:1 ratio (1-gallon plants) and Willows shall be replaced onsite at a 2:1 ratio (willow cuttings).*

The project as proposed would not have an adverse effect on the environment.

ATTACHMENT D

GEOTECHNICAL INVESTIGATION REPORT

KLEINFELDER
Bright People. Right Solutions.

RECEIVED
DEC 12
COUNTY OF SAN LUIS OBISPO
DEPARTMENT OF PUBLIC WORKS

1410 F Street
Fresno, CA
93706

p| 559.486.0750
f| 559.442.5081

kleinfelder.com

December 10, 2008
File No.: 99579.GEO

County of San Luis Obispo
Department of Public Works
County Government Center, Room 207
San Luis Obispo, California 93408

Attention: Ms. Cori Marsalek

SUBJECT: Addendum to Foundation Report
Pedestrian Bridges at Haystack Creek
Nipomo, California

Dear Ms. Marsalek:

This addendum letter is to confirm our conversations regarding the use of spread footings at the pedestrian bridges across the north and south forks of Haystack Creek.

The bearing elevations in the Foundation Report reflect potential scour under design flood flow. The intent of the Foundation Report recommendations can be achieved by using an unreinforced lean concrete (about 3 sack mix) placed between the bottom of the structural footing and the bearing elevations. The structural footing should be dowelled to the lean concrete to transfer lateral load.

Should there be are any additional questions or if we can be of further assistance, please contact this office at your convenience.

Respectfully submitted,
KLEINFELDER

David L. Pearson, PE, GE
Principal Geotechnical Engineer

REGISTERED PROFESSIONAL ENGINEER
DAVID L. PEARSON
No. 674
Exp. 12/31/09
GEOTECHNICAL
STATE OF CALIFORNIA

DLP:llp

99579.GEO/FRE8L270
Copyright 2008 Kleinfelder

FOUNDATION REPORT
PROPOSED PEDESTRIAN BRIDGES
NIPOMO, CALIFORNIA

A report prepared for:

County of San Luis Obispo
Department of Public Works
County Government Center, Room 207
San Luis Obispo, California, 93408

December 3, 2008
File No.: 99579.GEO

This document was prepared for use only by the client, only for the purposes stated, and within a reasonable time from issuance. Non-commercial, educational and scientific use of this report by regulatory agencies is regarded as a "fair use" and not a violation of copyright. Regulatory agencies may make additional copies of this document for internal use. Copies may also be made available to the public as required by law. The reprint must acknowledge the copyright and indicate that permission to reprint has been received.

Copyright 2008 Kleinfelder

Prepared For:

County of San Luis Obispo
Department of Public Works
County Government Center, Room 207
San Luis Obispo, California 93408

FOUNDATION REPORT
PROPOSED PEDESTRIAN BRIDGES
NIPOMO, CALIFORNIA

Kleinfelder Job No.: 99579.GEO

Prepared by:

Neva M. Popenoe, EIT
Staff Engineer

David L. Pearson, PE, GE
Principal Geotechnical Engineer

REGISTERED PROFESSIONAL ENGINEER
DAVID L. PEARSON
No. 674
Exp. 12/31/09
GEOTECHNICAL
STATE OF CALIFORNIA

KLEINFELDER
1410 F Street
Fresno, California 93706
(559) 486-0750

December 3, 2008

Copyright 2008 Kleinfelder

KLEINFELDER
Bright People. Right Solutions.

TABLE OF CONTENTS

COVER LETTER

Chapter **Page**

1 INTRODUCTION 1
1.1 GENERAL 1
1.2 SCOPE OF SERVICES 1
1.3 PROJECT DESCRIPTION 2

2 FIELD EXPLORATION AND LABORATORY TESTING 4
2.1 PREVIOUS FIELD EXPLORATION 4
2.2 PREVIOUS FIELD AND LABORATORY TESTS 4

3 SITE CONDITIONS 6
3.1 SURFACE CONDITIONS 6
3.2 EARTH MATERIALS 6
3.3 GROUNDWATER CONDITIONS 7

4 ENGINEERING SEISMOLOGY 8
4.1 FAULTS LOCAL TO THE PROPOSED FACILITY 8
4.2 SEISMIC DESIGN CRITERIA 8
4.3 LIQUEFACTION AND SEISMIC SETTLEMENT 9

5 DESIGN RECOMMENDATIONS 11
5.1 CHANNEL SCOUR 11
5.2 CONSTRUCTION SLOPE STABILITY 11
5.3 GENERAL 11
5.4 SPREAD FOUNDATIONS 12
5.4.1 Construction Considerations 13
5.5 PILE FOUNDATIONS 13
5.5.1 Lateral Capacity 14
5.6 LATERAL EARTH PRESSURES AGAINST ABUTMENTS AND WINGWALLS 15
5.7 ABUTMENT DYNAMIC LATERAL RESISTANCE 16
5.8 EMBANKMENTS 18
5.9 EARTHWORK 18
5.10 CORROSION POTENTIAL 19

6 CLOSURE 20

APPENDICES

A LOG OF TEST BORINGS
B PLASTICITY INDEX B-1
CONSOLIDATION TEST B-2/B-3
DIRECT SHEAR TEST B-4/B-5
MOISTURE DENSITY RELATIONSHIP B-6
C ARS CURVE

Copyright 2008 Kleinfelder

1 INTRODUCTION

1.1 GENERAL

This report presents the results of a geotechnical investigation for the proposed Pedestrian Bridges along Beechnut Avenue, north and south of Tefft Street in Nipomo, California. The scope of services consisted of review of previous site field exploration and laboratory testing, engineering analysis, and preparation of this written report. The purpose of this investigation was to evaluate the general soil conditions, and provide geotechnical recommendations and opinions to aid in the foundation design.

This report includes recommendations related to the geotechnical aspects of project design and construction. Conclusions and recommendations presented in this report are based on the subsurface conditions encountered at the locations of previous exploration and the provisions and requirements outlined in the "Additional Services" and "Limitations" Sections of this report. Recommendations presented herein should not be extrapolated to other areas on or off site or used for other projects without prior review.

1.2 SCOPE OF SERVICES

The purpose of the Foundation Report is to provide geotechnical recommendations and opinions to aid in design of the project. The report provides the following:

- A description of the proposed project including a vicinity map showing the location of the site and a site plan showing the locations of previous exploration points;
- A description of the site surface and subsurface conditions encountered during the previous field investigation, including Log of Test Boring drawings suitable for inclusion into the contract drawings;
- A summary of the previous field exploration and laboratory testing programs;

Copyright 2008 Kleinfelder

- Comments on groundwater conditions encountered in previous field explorations and regional groundwater
- Comments on the general engineering seismology of the site, including the seismic parameters associated with the 2006 IBC seismic design criteria and recommended peak bedrock acceleration and ARS curve, associated with Caltrans Seismic Design Criteria Version 1.4;
- Comments on liquefaction potential and seismically induced settlement;
- Comments on historic scour;
- Comments on the suitability of alternative foundation types (CIDH pile and spread footings);
- Recommendations for vertical bearing of CIDH pile foundations, including design and specified tip elevations
- Recommendations for lateral capacity of CIDH piles, including parameters for LPILE, load versus deflection for pile head deflections up to 1-inch, and moment distribution for selected head deflections;
- Recommendations to aid in design of spread for foundation design, including gross permissible contact stress and bearing capacity and design footing elevations;
- Recommendations for lateral capacity of spread footings (passive pressure and frictional coefficient);
- Comments on initial soil stiffness and ultimate equivalent lateral pressure by Caltrans procedures for abutment endwalls;
- Recommendations for site preparation including a discussion concerning the use of on-site soils for engineered fill, and recommended import fill specifications;
- General comments on construction slope stability at the approaches; and
- Comments on the general concrete characteristics of foundation soil.

1.3 PROJECT DESCRIPTION

The proposed project will involve the construction of two pedestrian bridges. The structures will span the north and south fork of Haystack Creek. The bridges are anticipated to be steel truss framed and typically about 12 feet wide and 44 feet long.

Copyright 2008 Kleinfelder

Based on available geotechnical data, suitable foundation types are either spread footings or cast-in-drilled-hole (CIDH) piles. The alignments of the bridges are shown on the attached Log of Test Borings drawings. Tables 1.3-1 provide data on the bridges furnished by County of San Luis Obispo.

TABLE 1.3-1
FOUNDATION DATA

Support		Minimum Finished Grade Elev. (ft)[2]	Minimum Bottom of Footing Elev. (ft)	Footing Size (ft)		S_P[1]
				B	L	
Northfork	Abut 1	348.5	340.3	6	24	1"
	Abut 2	348.5	343.4	6	24	1"
Southfork	Abut 1	344.4	338.0	6	24	1"
	Abut 2	344.6	336.2	6	24	1"

Notes: (1) Assumed permissible settlement under service load
(2) Minimum finished grade is based on information shown on preliminary drawings

Copyright 2008 Kleinfelder

2 FIELD EXPLORATION AND LABORATORY TESTING

2.1 PREVIOUS FIELD EXPLORATION

A field exploration was conducted on January 23, 2008, for planned arch culverts. The exploration consisted of drilling four (4) exploratory test borings (2 at each crossing) and a site reconnaissance by a staff engineer. The test borings were drilled with a truck-mounted drill rig using hollow stem auger drilling techniques. The borings extended to a depth 31.5 feet below the existing ground surface. The approximate locations of the test borings are indicated on the Log of Test Borings located in Appendix A of this report.

The earth materials encountered in the test borings were visually classified in the field and a continuous log was recorded. In-place samples were collected from the test borings at selected depths by driving a 2.5-inch I.D. split barrel sampler containing brass liners into the undisturbed soil with a 140-pound automatic safety hammer free falling a distance of 30-inches. Sampling also utilized an ASTM D1586 standard penetrometer without liners (barrel I.D. of 1.5 inches), driven 18-inches in the same manner. This latter sampling procedure generally conformed to the ASTM D1586 test procedure. Resistance to sampler penetration over the last 12-inches is noted on the Log of Test Borings as the "Penetration Index." The penetration indices listed on the Log of Test Borings have not been corrected for the effects of overburden pressure, sampler size, rod length, or hammer efficiency. In addition, bulk samples were obtained from auger cuttings at selected locations.

2.2 PREVIOUS FIELD AND LABORATORY TESTS

Penetration rates determined in general accordance with ASTM D1586 were used to aid in evaluating the consistency, compression, and strength characteristics of the foundation soils.

Copyright 2008 Kleinfelder

Previous laboratory tests were performed on selected samples to evaluate certain engineering properties. The results assisted in the evaluation of preliminary foundation design recommendations. The laboratory testing included the following tests:

- Unit Weight (ASTM D2937)
- Moisture Content (ASTM D2216)
- Direct Shear (ASTM D3080)
- Consolidation (ASTM D2435)
- Plasticity Index (ASTM D4318)
- Maximum Density/Optimum Moisture (ASTM D1557)
- Soluble Sulfate Content (California Test Method No. 417)
- Soluble Chloride Content (California Test Method No. 422)

Unit weight and moisture content test results are shown on the Log of Test Borings drawing in Appendix A. The soluble sulfate, soluble chloride, pH, and minimum resistivity results are presented in Section 5.8 ("Corrosion Potential"). The results of other laboratory tests are in Appendix B.

Because of the biogenic nature of the site shale and relatively small scale of the consolidation tests, the consolidation characteristics of the material are overstated by the laboratory testing.

Copyright 2008 Kleinfelder

3 SITE CONDITIONS

3.1 SURFACE CONDITIONS

The project site includes two locations, northwest and southeast of Tefft Street along Beechnut Avenue over Haystack Creek in Nipomo, California. The project sites are surrounded by urban development. The banks and channel bottom of Haystack Creek support a sparse to moderate growth of grasses, shrubs, and trees in the immediate project area. This vegetation would imply the channel is presently relatively stable. Signs of some channel aggrading were previously observed at the crossing of the north fork of Haystack Creek and Tefft Street.

3.2 EARTH MATERIALS

The earth materials consist of geologically older alluvial/residual soil underlain by Miocene Age Monterey Formation material. The alluvial/residual soils encountered in the previous exploratory borings consisted of lean sandy clay. The soil had a medium stiff to very stiff and a dense to very dense consistency. The underlying formational material consists of siliceous (biogenic) shale, weathered, firm and locally cherty. Table 3.2-1 provides the approximate contact elevation of the shale.

TABLE 3.2-1
FORMATIONAL ELEVATION

Boring	Bridge	Support	Shale Elevation
2	North Fork	Abutment 2	338
4		Abutment 1	334
1	South Fork	Abutment 1	339
3		Abutment 2	332

Copyright 2008 Kleinfelder

The above is a general description of the earth material profile. A more detailed representation of the stratigraphy at the specific boring locations is provided on the Log of Test Borings.

3.3 GROUNDWATER CONDITIONS

Water was flowing in the channel at the time of the previous exploration (January, 2008). Groundwater was not encountered in the depths explored, 31.5 feet below existing grade. Considering the earth material types, it is unlikely seasonal flow in Haystack Creek significantly affects the local groundwater conditions. Prolonged stream flow could result in lateral seepage along the soil/formation contact.

Copyright 2008 Kleinfelder

4 ENGINEERING SEISMOLOGY

4.1 FAULTS LOCAL TO THE PROPOSED FACILITY

The project site and its vicinity are located in an area historically characterized by potentially moderate to high seismic activity. There are no known faults that cut through the local soils at the site, and the site is not located in an Alquist-Priolo Earthquake Fault Zone as defined by Special Publication 42 (revised 1994) published by the California Geologic Survey (CGS). Based on the current understanding of the geologic framework and tectonic setting of project site, the primary source of seismic shaking is anticipated to be the Oceanic/West Huasna fault, which is located about 6.8 km northeast of the site. The site is located within the area of influence of the Rinconada, San Andreas and several smaller faults.

4.2 SEISMIC DESIGN CRITERIA

The Oceanic-West Huasna fault is a reverse oblique fault. With this faulting mechanism, Caltrans presently suggests attenuation relationships by Sadigh (1997). A maximum credible event (M7.0) on the Oceanic-West Huasna fault would produce an estimated peak bedrock acceleration (PBA) of 0.50g. In applying the Caltrans seismic design approach, a design PBA of 0.5g should be used. The site earth materials are best represented by Caltrans Soil Profile C. Due to the proximity to the fault, the spectral acceleration has been increased by 20% for periods above 1.0 second and, by linear interpolation, increased 0% to 20% for periods between 0.5 and 1.0 second. The ARS curves from Figure B.5 (Soil Profile C, M=7.25 $\pm$ 0.25) of the Caltrans Seismic Design Criteria, Version 1.4, June 2006, modified for fault proximity, should be used for this site. This modified ARS curve, along with a tabular form of the spectral data, is provided in Appendix C.

If design utilizes the 2006 IBC, Table 4.2-1 provides the seismic parameters associated with the 2006 IBC seismic design criteria.

Copyright 2008 Kleinfelder

TABLE 4.2-1
2006 IBC SEISMIC DESIGN PARAMETERS

S_S	1.344
S_1	0.486
Site Class	C
Fa	1.0
Fv	1.314
S_{MS}	1.344
S_{M1}	0.639
S_{DS}	0.896
S_{D1}	0.426

4.3 LIQUEFACTION AND SEISMIC SETTLEMENT

In order for liquefaction of soils due to ground shaking to occur, it is generally accepted that four conditions will exist:

- The subsurface soils are in a relatively loose state,
- The soils are saturated,
- The soils are non-plastic, and
- Ground shaking is of sufficient intensity to act as a triggering mechanism.

The peak horizontal ground acceleration (PHGA) associated with the maximum event on the Oceanic-West Huasna fault would be 0.43g. The PHGA associated with the IBC design earthquake would be 0.36g.

Copyright 2008 Kleinfelder

Geologic age also influences the potential for liquefaction. Sediments deposited within the past few thousand years are generally much more susceptible to liquefaction than older Holocene sediments; Pleistocene sediments are even more resistant; and pre-Pleistocene sediments are generally immune to liquefaction (Youd, 2001).

The clay soil is sufficiently cohesive and the Miocene Age formational material is very dense. Both material units can be considered immune from liquefaction.

Another type of seismically induced ground failure, which can occur as a result of seismic shaking, is dynamic compaction. Such phenomena typically occur in unsaturated, loose granular material or uncompacted fill soils. The subsurface conditions encountered in the borings advanced at the site are not generally considered conducive to such seismically induced ground deformation.

Copyright 2008 Kleinfelder

5 DESIGN RECOMMENDATIONS

5.1 CHANNEL SCOUR

Flow within Haystack Creek did not allow for any exploration in the channel. Linear extrapolation between borings would indicate the formational shale would be about elevation 336 at the north fork and elevation 335 at the south fork. Previous exploration at the crossing of Haystack Creek at Tefft Street indicated scour to a depth of about 3 to 4 feet. In the absence of specific hydraulic evaluation or exploration in the channel, it is recommended a design scour depth of 4 feet, or the depth to bedrock, which ever is shallowest be used for both locations. Footings for the planned structures should extend below the design depth of channel scour.

5.2 CONSTRUCTION SLOPE STABILITY

Temporary construction slopes or shoring will be necessary to allow for installation of foundations and the structures. If shoring is used, the lateral earth pressures presented in Tables 5.4-2 and 5.6-1 can be used for design. Analysis, based on dimensionless methods by Janbu, indicate temporary slopes to a depth of about 15 feet could be constructed at a gradient of 0.5:1 (H:V).

If excavations encounter sand or significant seepage, it may be necessary to locally flatten the slope and/or dewatering.

5.3 GENERAL

Conceptual design considered various foundation alternatives. Foundation soil has sufficiently high strength and low compression characteristics to allow for spread foundations at abutments. Based on the soil profile encountered, uncased cast-in-drilled-hole (CIDH) piles would be a suitable alternative to spread footings.

Copyright 2008 Kleinfelder

5.4 SPREAD FOUNDATIONS

Permissible net and gross contact stresses are provided in Table 5.4-1. Also provided are the allowable (WSD) gross bearing capacities. The gross bearing capacities are based on a minimum foundation embedment of 4 feet.

TABLE 5.4-1
FOUNDATION DESIGN RECOMMENDATIONS FOR SPREAD FOOTINGS

Support		Design Bearing Elevation	Foot. Size (ft)		WSD Service Limit State Load Combination		
			B'	L'	Permissible Contact Stress (ksf)[1]		Allowable Gross Bearing Capacity (ksf) FS=3.0
					Net	Gross	
Northfork	Abut 1	337	6	24	3.9	4.5	23.8
	Abut 2	338	6	24	6.3	7.2	23.8
Southfork	Abut 1	339	6	24	3.3	3.7	23.8
	Abut 2	332	6	24	4.4	5.3	23.8

[1] Contact stress based on an assumed permissible settlement of 1.0 inch

If designers need information on the estimated settlement under actual loads, data can be provided.

Table 5.4-2 provides parameters for resisting Service Limit, Strength Limit, and Extreme Condition lateral loads.

Copyright 2008 Kleinfelder

TABLE 5.4-2
LATERAL RESISTANCE OF FOUNDATION SOILS

	Service FS=2	Strength ϕ=0.5	Strength ϕ=0.8	Extreme ϕ=1.0
Frictional Coefficient	0.58	-	0.70	0.87
Passive Pressure (psf/ft of depth)	320 psf/ft	320 psf/ft	-	640 psf/ft
Lateral translation needed to develop passive pressure	0.005D	0.005D	-	0.023D

5.4.1 Construction Considerations

Prior to placing steel or concrete, footing excavations should be cleaned of all debris, disturbed soil, and water. It may be necessary to control any channel flow which might occur near construction.

5.5 PILE FOUNDATIONS

Table 5.5-1 provides the design pile tip elevations for compression loads at the abutments. Pile capacities have only been considered below the design scour elevation or shale, whichever is shallower. Footing depths need to only accommodate structural design and construction considerations.

Copyright 2008 Kleinfelder

TABLE 5.5-1
FOUNDATION RECOMMENDATIONS FOR ABUTMENTS

Support		Pile	Service Limit State Load (kips) per Support		Service Limit State Total Load (kips) per pile (Compression)	Nominal Resistance (kips)	Specified Tip Elevation
			Total	Permanent			
North Fork	Abut 1	16" CIDH	N/A	N/A	140	280	302
		24" CIDH	N/A	N/A	200	400	305
	Abut 2	16" CIDH	N/A	N/A	140	280	304
		24" CIDH	N/A	N/A	200	400	306
South Fork	Abut 1	16" CIDH	N/A	N/A	140	280	305
		24" CIDH	N/A	N/A	200	400	307
	Abut 2	16" CIDH	N/A	N/A	140	280	298
		24" CIDH	N/A	N/A	200	400	301

5.5.1 Lateral Capacity

Tables 5.5-2 and 5.5-3 provide a preliminary geotechnical profile and parameters for use in evaluating the lateral response of piles by LPILE at the North Fork Bridge and South Fork Bridge, respectively.

Copyright 2008 Kleinfelder

TABLE 5.5-2
LPILE PARAMETERS (NORTH FORK BRIDGE)

Elevation (feet)	Recommended P-Y Curve	γ (pci)	ϕ (degree)	c (psi)	k (pci)	ε_{50}
Above 336	Silt	0.065	35	6.25	200	0.005
Below 336	Silt	0.028	43	0	300	0.001

TABLE 5.5-3
LPILE PARAMETERS (SOUTH FORK BRIDGE)

Elevation (feet)	Recommended P-Y Curve	γ (pci)	ϕ (degree)	c (psi)	k (pci)	ε_{50}
Above 335	Silt	0.065	35	6.25	200	0.005
335 to 333	Silt	0.026	43	0	300	0.001
333 to 312	Silt	0.030	43	0	300	0.001
Below 312	Silt	0.033	43	0	300	0.001

If necessary for the design, stiffness parameters for the pile alternatives could be developed.

5.6 LATERAL EARTH PRESSURES AGAINST ABUTMENTS AND WINGWALLS

The lateral earth pressure against the abutment walls and wingwalls will be dependent upon the ability of the walls to deflect. The expansive nature of the clay soil will dictate the earth pressure associated with backfill comprised of on-site soil. Presented in Table 5.6-1 and Table 5.6-2 are the active and braced lateral earth pressures with on-site and select granular backfill materials, respectively. The active pressure is applicable to walls able to rotate or translate 0.0005 radians at the top or bottom. Walls restrained from translation at the top and bottom but able to deflect 0.0005 radian between restrained points should be designed for the braced lateral pressure. If a bottom restraining slab is not incorporated in design, the active condition would likely be most applicable.

Copyright 2008 Kleinfelder

TABLE 5.6-1
LATERAL PRESSURES FOR ON-SITE SOIL

	Above Groundwater	Below Groundwater
Braced Pressure (psf)	32H	17.5H + Hydrostatic
Active Pressure (psf/ft of depth)	50	27 + Hydrostatic

TABLE 5.6-2
LATERAL PRESSURES FOR SELECT GRANULAR SOIL(1)

	Above Groundwater	Below Groundwater
Braced Pressure (psf)	22.5H	13.5H + Hydrostatic
Active Pressure (psf/ft of depth)	35	21 + Hydrostatic

(1) Select granular soil should be consistent with the material requirements of structure backfill, as defined by Section 19-3.06 of Caltrans Standard Specifications, May 2006.

H in the expressions represents the retained height in feet. It is recommended the values for below groundwater be used below the design channel high water level.

To reduce possible over-stressing of the wingwalls, compaction equipment should not exceed any criteria established by the designers.

5.7 ABUTMENT DYNAMIC LATERAL RESISTANCE

For backfill at abutments constructed in accordance with applicable provisions of the Caltrans Standard Specifications, an initial abutment soil stiffness of 20 kip/in/ft is recommended. The ultimate lateral resistance that may be applied against abutments to resist seismic loading will be dependent on the deflection that occurs (which mobilizes shear resistance in the soil). Figure 5.7-1 presents the ultimate equivalent uniform lateral soil resistance as a function of horizontal strain (deflection/height) for the abutments. The maximum resistance for strain in excess of 1.0% is 5.0 ksf, when the

Copyright 2008 Kleinfelder

height of the wall that is buried below the horizontal ground surface is equal to, or greater than, 5.5 ft. When the abutment height is less than 5.5 ft, the maximum equivalent uniform lateral soil resistance shall be reduced proportionately by H/5.5, where H is the endwall height in feet.

FIGURE 5.7-1
UNFACTORED NOMINAL LATERAL BEARING FOR SEISMIC LOADING AT ABUTMENTS

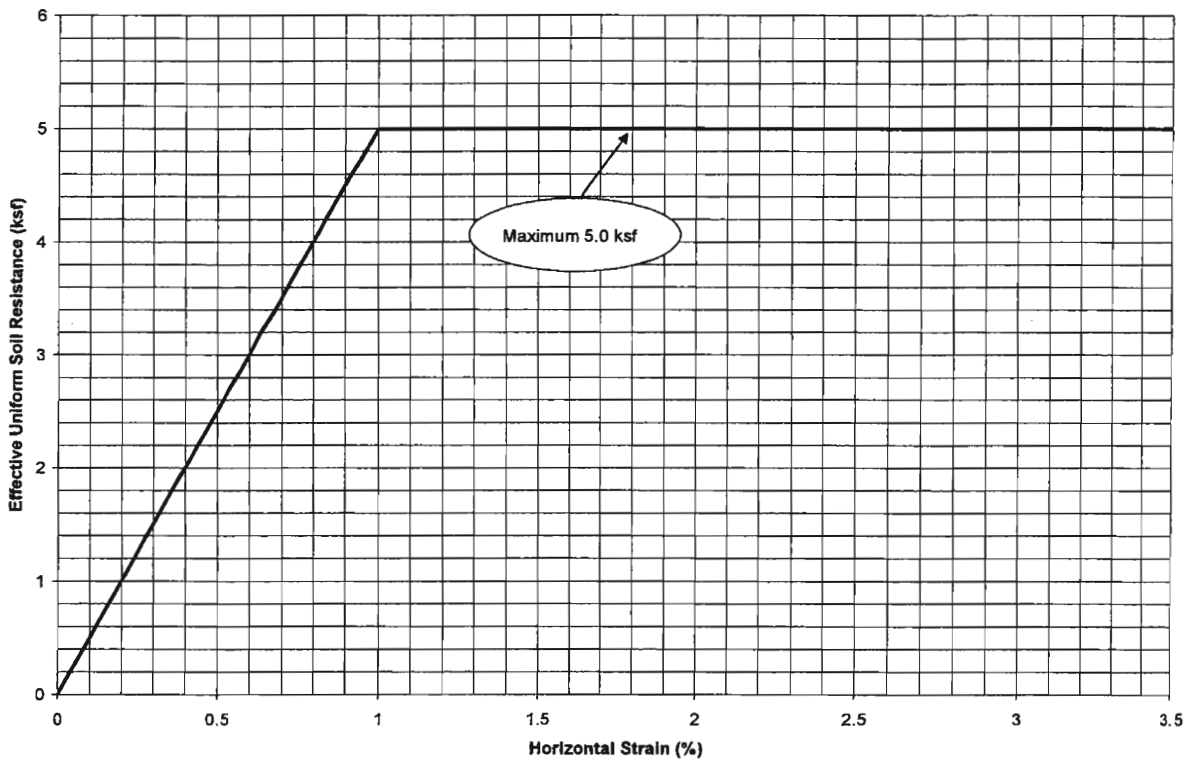

If required for design, dynamic stiffness parameters for horizontal and vertical translation, torsion, and rocking can be developed.

Copyright 2008 Kleinfelder

5.8 EMBANKMENTS

In general, the approach embankments within the influence of the abutments should be constructed in accordance with Section 19 of the Caltrans Standard Specifications.

The settlement was evaluated using methods by Schmertmann, modified for flexible foundations. The stress induced by the proposed approach embankments at the abutments would result in less than 0.25 inch of settlement. No appreciable post construction embankment settlement is anticipated. Consequently, no monitoring or construction delay is recommended and the settlement induced by the embankment will not effect abutment settlement.

5.9 EARTHWORK

Necessary site earthwork should generally be performed in accordance with Caltrans Standard Specifications, May 2006, and County of San Luis Obispo criteria.

If abutment walls or wingwalls are designed for the granular import lateral earth pressures, the material should have a minimum sand equivalent of 20. As a minimum, the granular import should extend a horizontal distance behind the wall equal to 0.3H at the top of the footing and 0.8H at the top of the wall, where H is the height.

Select granular soils used for engineered fill should be uniformly moisture conditioned to at, or above, optimum moisture, placed in horizontal lifts less than 8 inches in loose thickness, and compacted to at least 90 percent relative compaction. If on-site clay is used as backfill, the clay soil should be moisture conditioned to at least 4% above optimum and compacted to at least 90%, but no more than 95% of the maximum dry density. It is recommended a dry density comparison be used for the maximum density determination. Disking and/or blending may be required to uniformly moisture-condition soils used for engineered fill.

Copyright 2008 Kleinfelder

5.10 CORROSION POTENTIAL

A soil sample was obtained from depths of 5 to 10 feet below existing grade from B-1 of the previous field exploration and tested to evaluate soluble sulfate content and soluble chloride content. The test results suggest that a low level of soluble sulfates (67.3 ppm) and moderate level of chlorides (450 ppm) are present in on-site soils. Normal cement (Type II) should be adequate in foundation concrete.

Copyright 2008 Kleinfelder

6 CLOSURE

The conclusions and recommendations of this report are for the design of the proposed Pedestrian Bridges along Beechnut Avenue and north and south of Tefft Street located in Nipomo, California, as described in the text of this report. The findings, conclusions, and recommendations presented in this report were prepared in accordance with generally accepted geotechnical engineering practice. No warranty, express or implied, is made. The field exploration program and this report were based on the proposed project information provided to Kleinfelder. If any change (i.e., structure type, location, etc.) is implemented which materially alters the project, additional geotechnical services may be required, which could include revisions to the foundation recommendations given herein.

This report may be used only by the County of San Luis Obispo, their designated representatives and designers and only for the purposes stated, within a reasonable time from its issuance, but in no event later than two years (without review) from the date of the report. Land use, site conditions or other factors may change over time, and additional work may be required with the passage of time. Any other party who wishes to use this report shall notify Kleinfelder of such intended use. Based on the intended use of the report, Kleinfelder may require that additional work be performed and that an updated report be issued. Non-compliance with any of these requirements by the client or anyone else will release Kleinfelder from any liability resulting from the use of this report by any unauthorized party.

The scope of the geotechnical services did not include an environmental site assessment for the presence or absence of hazardous/toxic materials in the soil, groundwater or atmosphere, or the presence of wetlands.

Copyright 2008 Kleinfelder

NOTES:

1. Elevations based on information provided by County of San Luis Obispo, FL = 341.13'
2. Groundwater was encountered within the depths of exploration as shown on the boring logs.
3. Hammer type – Automatic safety hammer with a 140 lb safety drop hammer dropping 30 inches.

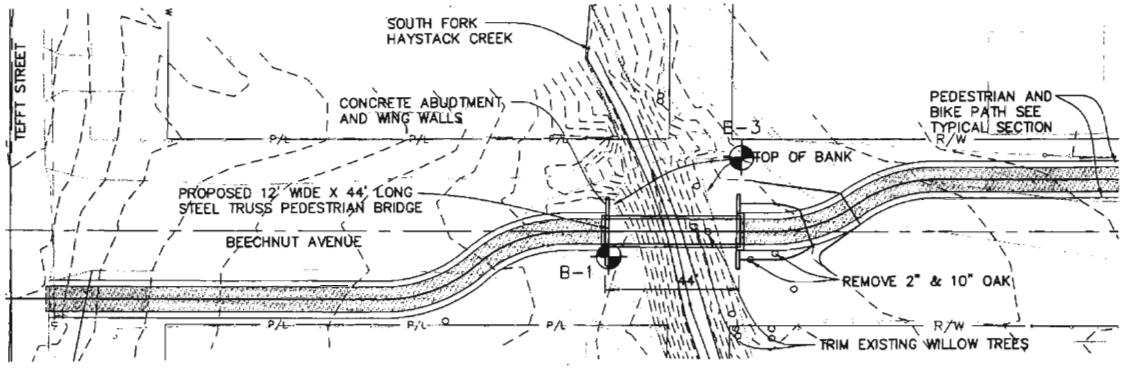

PLAN
1" = 20'

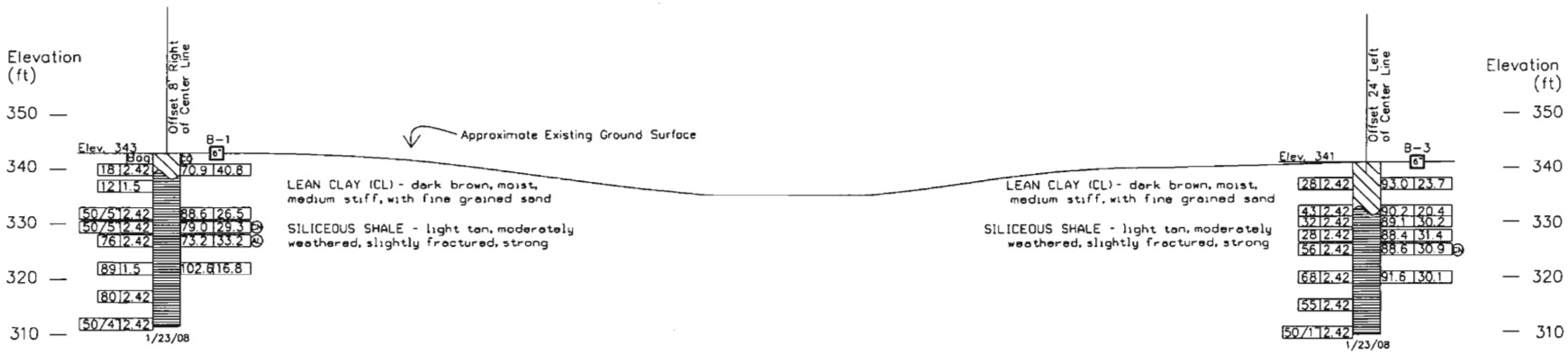

PROFILE
VERTICAL 1" = 10'
HORIZONTAL 1" = 2'

SHEET NO.	TOTAL SHEETS
XXX	XXX

REGISTERED PROFESSIONAL ENGINEER
David L. Pearson
674
12/31/09
GE
STATE OF CALIFORNIA

David L. Pearson
GEOTECHNICAL PROFESSIONAL

12/2/08
PLANS APPROVAL DATE

Prepared for:
COUNTY OF SAN LUIS OBISPO
COUNTY GOVERNMENT CENTER ROOM 207
SAN LUIS OBISPO CALIFORNIA 93408

Prepared by:
KLEINFELDER
1410 F STREET
FRESNO, CALIFORNIA 93706

LEGEND OF BORING OPERATIONS

LEGEND OF EARTH MATERIALS

CONSISTENCY CLASSIFICATION FOR SOILS

DATE PLOTTED => 12/2/2008
TIME PLOTTED => 5:09:42 PM
PLOT DRIVER => printer.plt
PEN TABLE => WSP_BW.tbl

SOUTHFORK HAYSTACK CREEK PED. BRIDGE

DESIGN OVERSIGHT	DRAWN BY	N. POPENOE	MARK SHUBERT	CORI MARSALEK	BRIDGE NO. XX
SIGN OFF DATE	CHECKED BY	DAVID L. PEARSON	FIELD INVESTIGATION BY: DATE: 1/23/08	PROJECT ENGINEER	POST MILE XX

GEOTECHNICAL LOG OF TEST BORINGS SHEET (ENGLISH)

REVISION DATES (PRELIMINARY STAGE ONLY)

DISREGARD PRINTS BEARING

LOG OF TEST BORINGS

HIPONO PEDESTRIAN BRIDGE

PUBLIC WORKS DEPARTMENT

SHEET NO. XX – X

NOTES:

1. Elevations based on information provided by County of San Luis Obispo, FL = 341.13'
2. Groundwater was encountered within the depths of exploration as shown on the boring logs.
3. Hammer type – Automatic safety hammer with a 140 lb safety drop hammer dropping 30 inches.

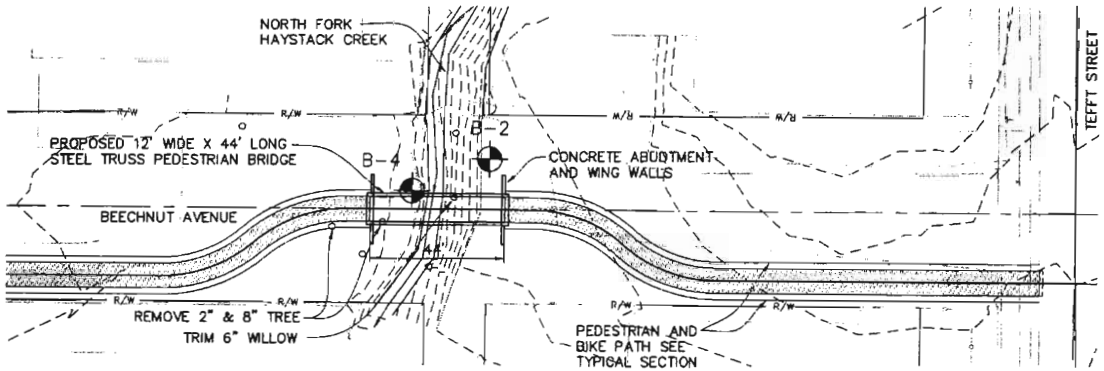

PLAN

1" = 20'

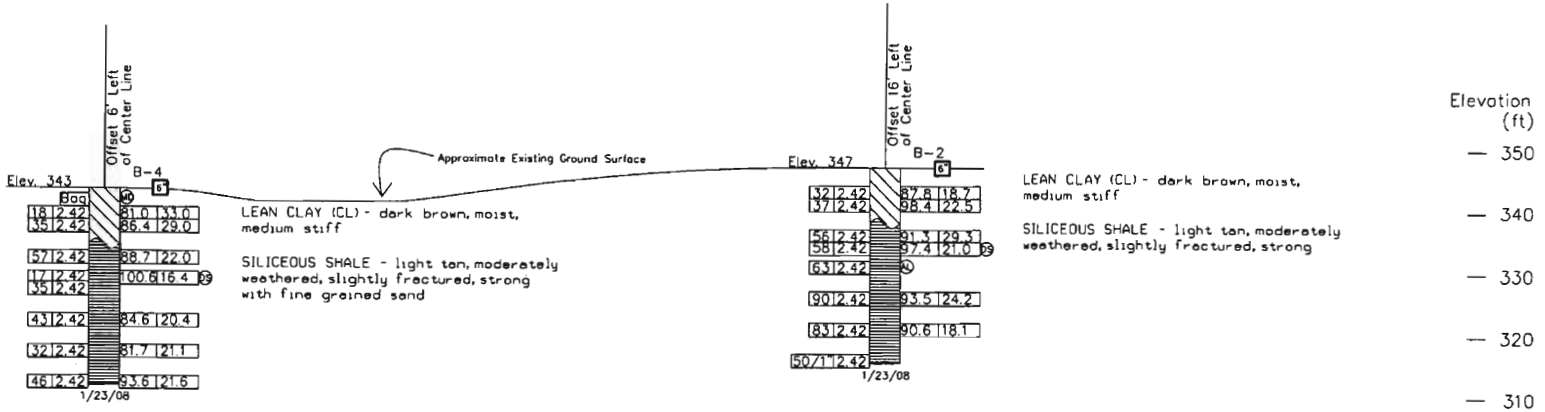

PROFILE

VERTICAL 1" = 10'
HORIZONTAL 1" = 2'

SHEET NO.	TOTAL SHEETS
XXX	XXX

GEOTECHNICAL PROFESSIONAL — PLANS APPROVAL DATE 12/2/08

Prepared for:
COUNTY OF SAN LUIS OBISPO
COUNTY GOVERNMENT CENTER ROOM 207
SAN LUIS OBISPO CALIFORNIA 93408

Prepared by:
KLEINFELDER
1410 F STREET
FRESNO, CALIFORNIA 93706

NORTHFORK HAYSTACK CREEK PED. BRIDGE

DESIGN OVERSIGHT	DRAWN BY N. POPENOE	MARK SHUBERT FIELD INVESTIGATION BY	CORI MARSALEK PROJECT ENGINEER
SIGN OFF DATE	CHECKED BY DAVID L. PEARSON	DATE 1/23/08	BRIDGE NO. XX / POST MILE XX

LOG OF TEST BORINGS

NIPOMO PEDESTRIAN BRIDGE

PUBLIC WORKS DEPARTMENT

SHEET NO.

GEOTECHNICAL LOG OF TEST BORINGS SHEET (ENGLISH)

REVISION DATES (PRELIMINARY STAGE ONLY)

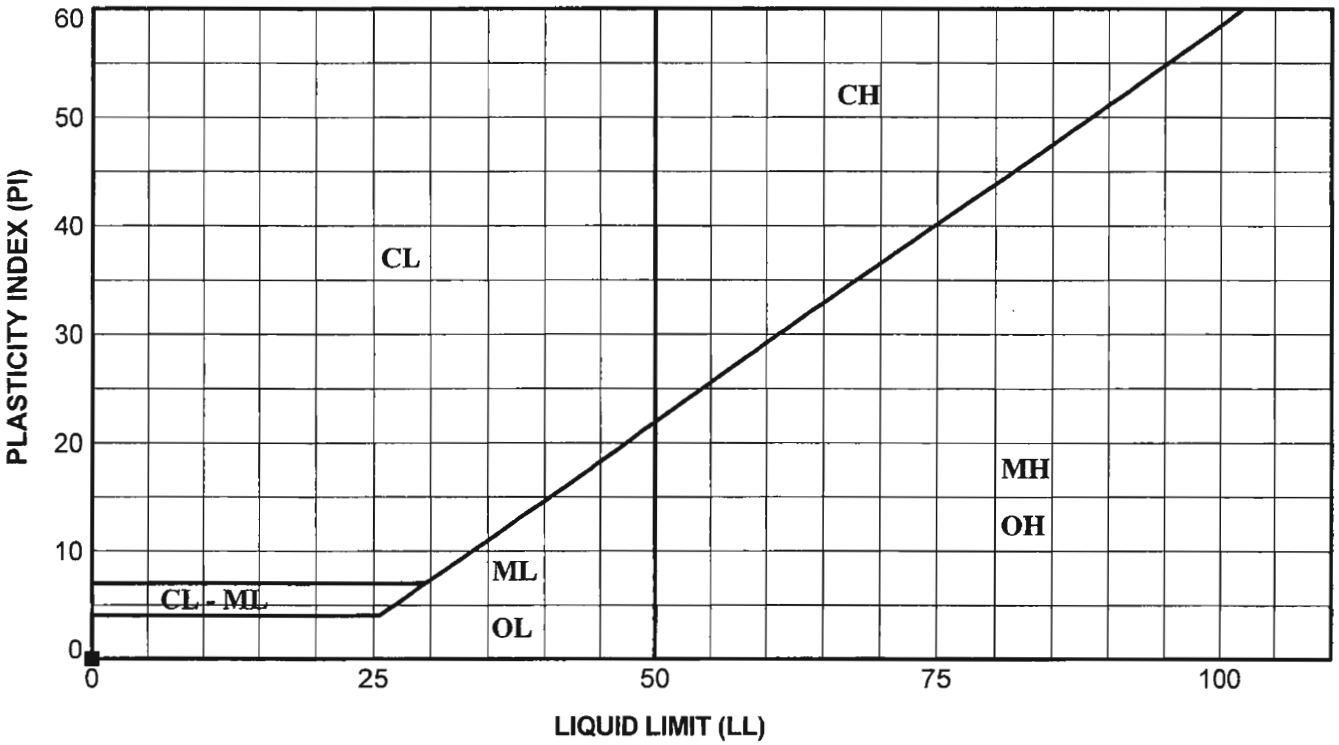

	Sample	Depth (ft)	LL (%)	PL (%)	PI (%)	LI (-)	Description
●	B-1	16.0	NP	NP	NP		SILIICEOUS SHALE
⊠	B-2	16.0	NP	NP	NP		SILIICEOUS SHALE

LL - Liquid Limit

PL - Plasticity Limit

PI - Plasticity Index

LI - Liquidity Index

Unified Soil Classification
Fine Grained Soil Groups

	LL < 50
ML	Inorganic clayey silts to very fine sands of slight plasticity
CL	Inorganic clays of low to medium plasticity
OL	Organic silts and organic silty clays of low plasticity

	LL > 50
MH	Inorganic silts and clayey silts of high plasticity
CH	Inorganic clays of high plasticity
OH	Organic clays of medium to high plasticity, organic silts

KLEINFELDER
Bright People. Right Solutions.

PROJECT NO. 99579.GEO

PLASTICITY INDEX
NIPOMO PEDESTRIAN BRIDGES
BEECHNUT AVENUE
NIPOMO, CALIFORNIA

PLATE
B-1

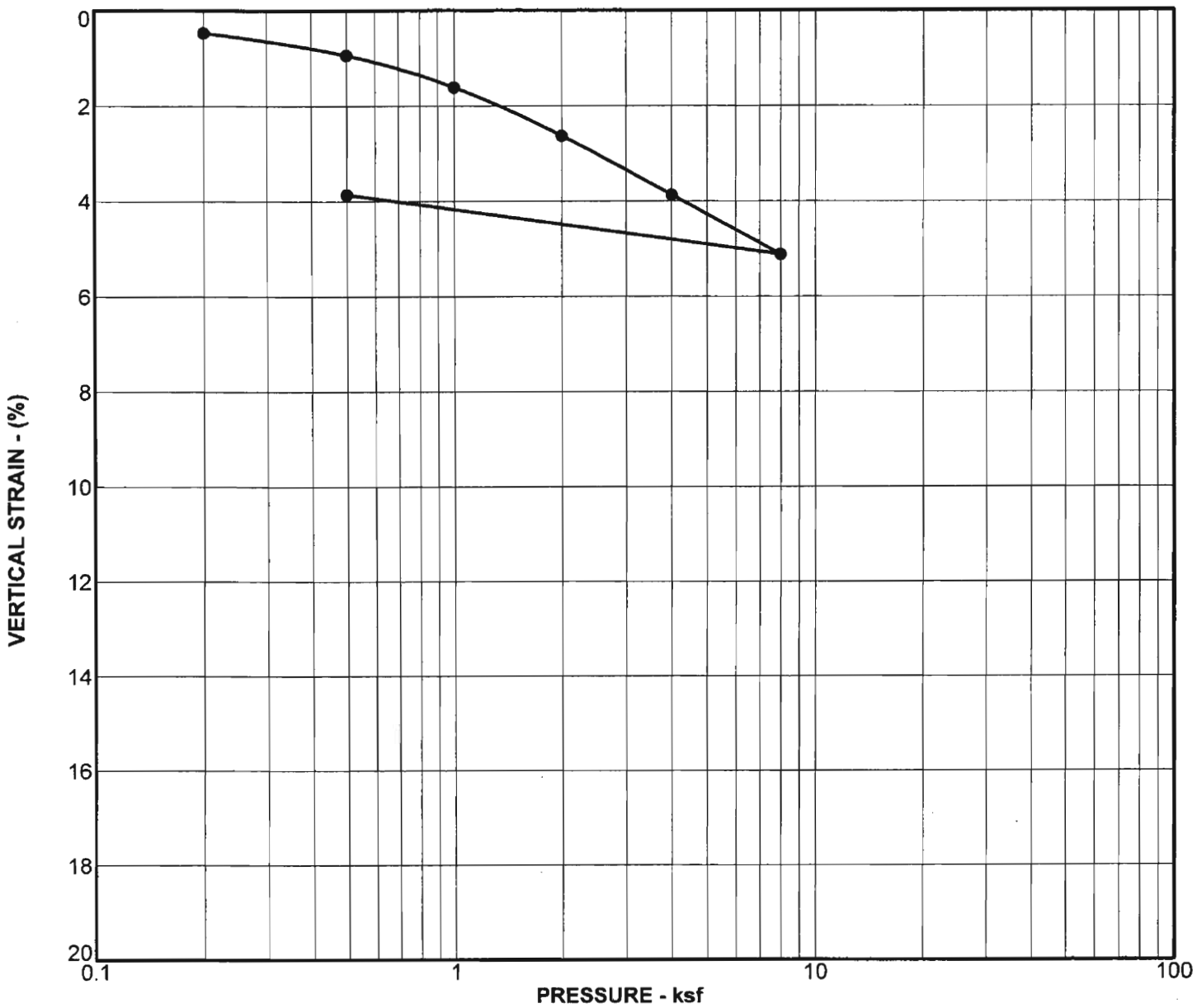

Sample	B-1
Depth	13.5 ft
Description	SILIICEOUS SHALE
Classification	

	Initial	Final
Dry density, pcf	79.0	82.2
Water content, %	29.3	35.8
Sample height, in.	1	0.9614

KLEINFELDER
Bright People. Right Solutions.

PROJECT NO. 99579.GEO

CONSOLIDATION TEST
NIPOMO PEDESTRIAN BRIDGES
BEECHNUT AVENUE
NIPOMO, CALIFORNIA

PLATE
B-2

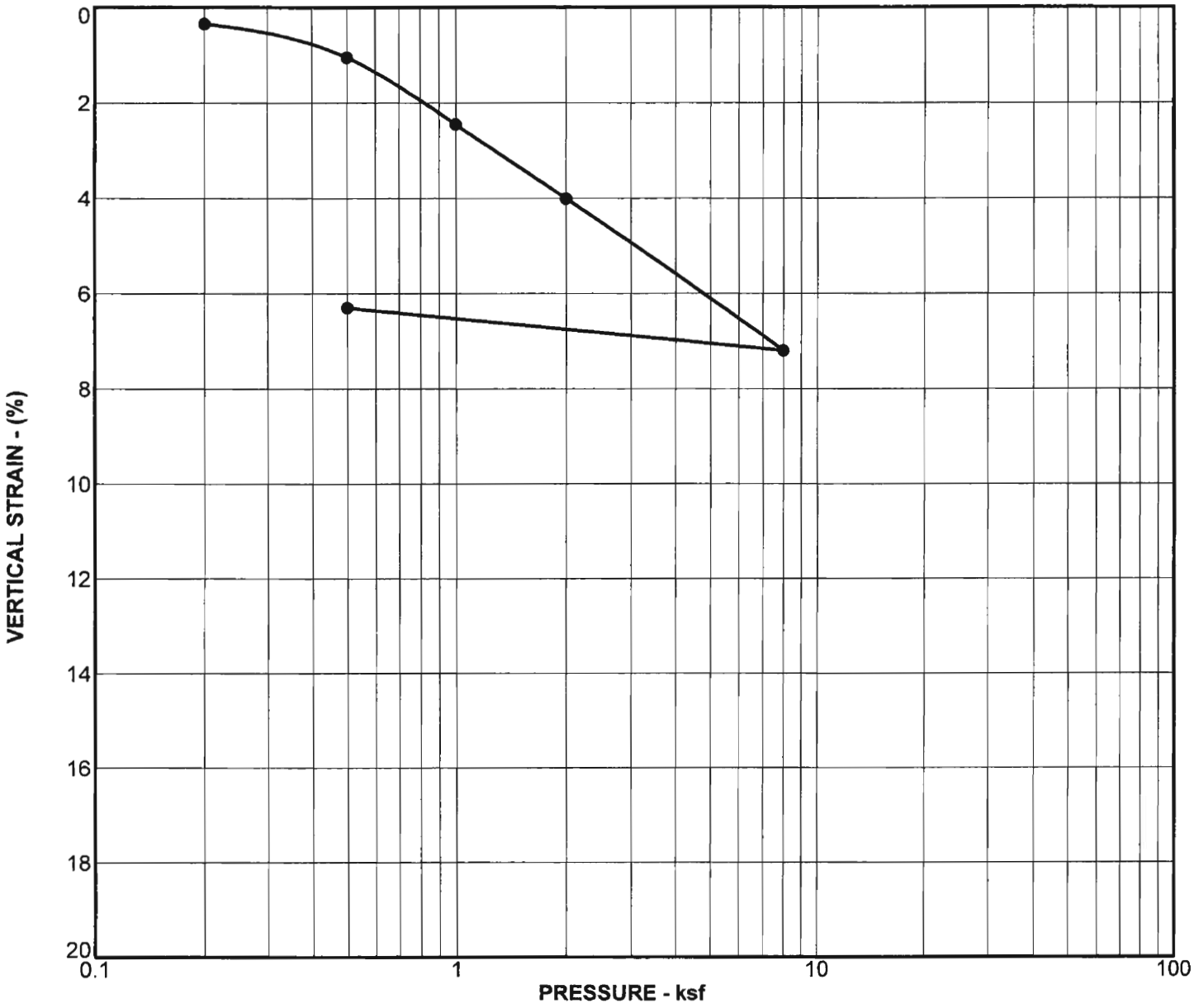

Sample	B-3
Depth	16.0 ft
Description	SILIICEOUS SHALE
Classification	

	Initial	Final
Dry density, pcf	88.6	94.6
Water content, %	30.9	28.9
Sample height, in.	1	0.937

KLEINFELDER
Bright People. Right Solutions.

PROJECT NO. 99579.GEO

CONSOLIDATION TEST
NIPOMO PEDESTRIAN BRIDGES
BEECHNUT AVENUE
NIPOMO, CALIFORNIA

PLATE
B-3

DIRECT SHEAR

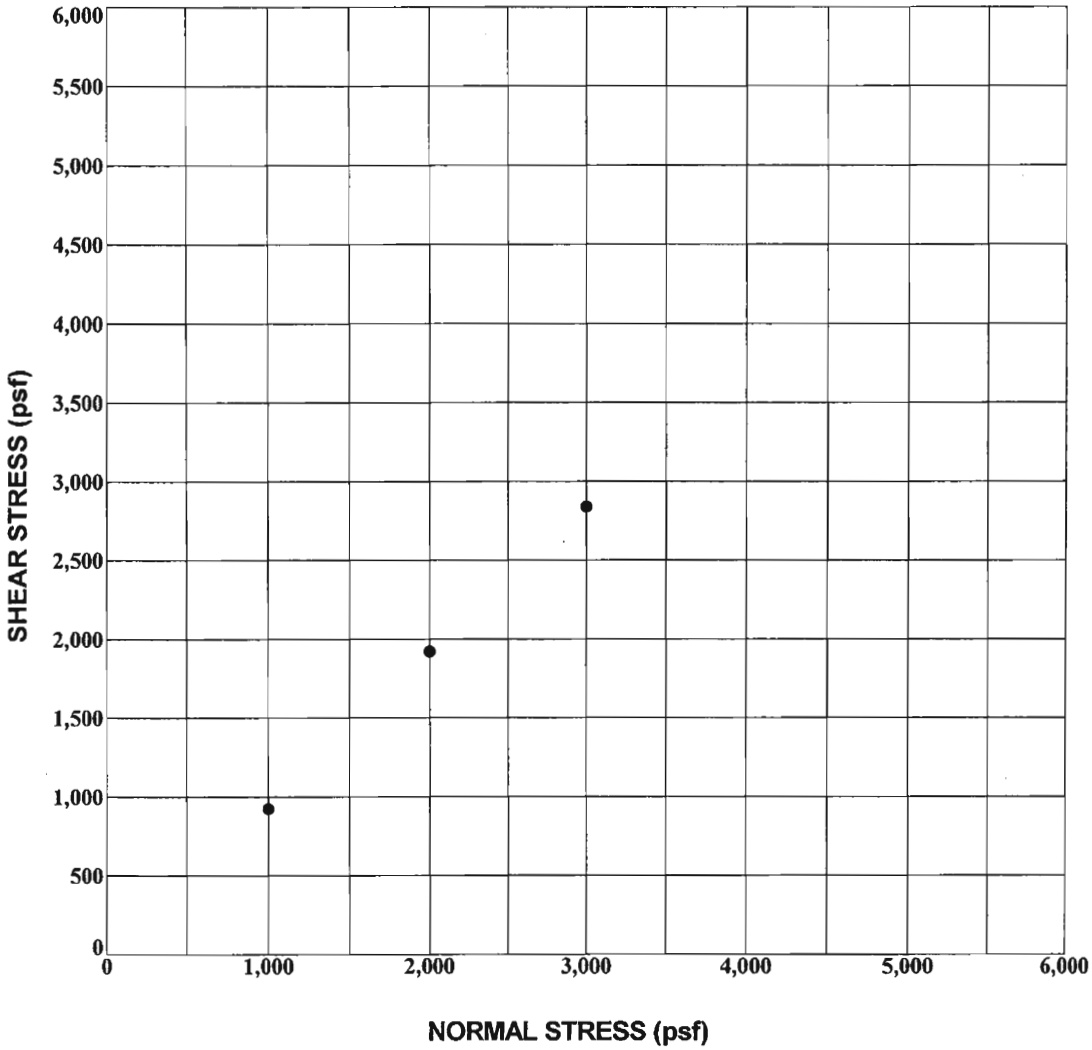

Source: B-2
Depth: 13.0 ft
Test Type: Consolidated - Drained
Soil Description: SILIICEOUS SHALE

Dry Density (pcf)	97.4	97.4	97.4
Initial Water Content (%)	21.0	21.0	21.0
Final Water Content (%)	36.6	33.5	32.2
Normal Stress (psf)	1000	2000	3000
Shear Stress(psf)	923	1920	2839

KLEINFELDER
Bright People. Right Solutions.

PROJECT NO. 99579.GEO

DIRECT SHEAR TEST
NIPOMO PEDESTRIAN BRIDGES
BEECHNUT AVENUE
NIPOMO, CALIFORNIA

PLATE
B-4

DIRECT SHEAR

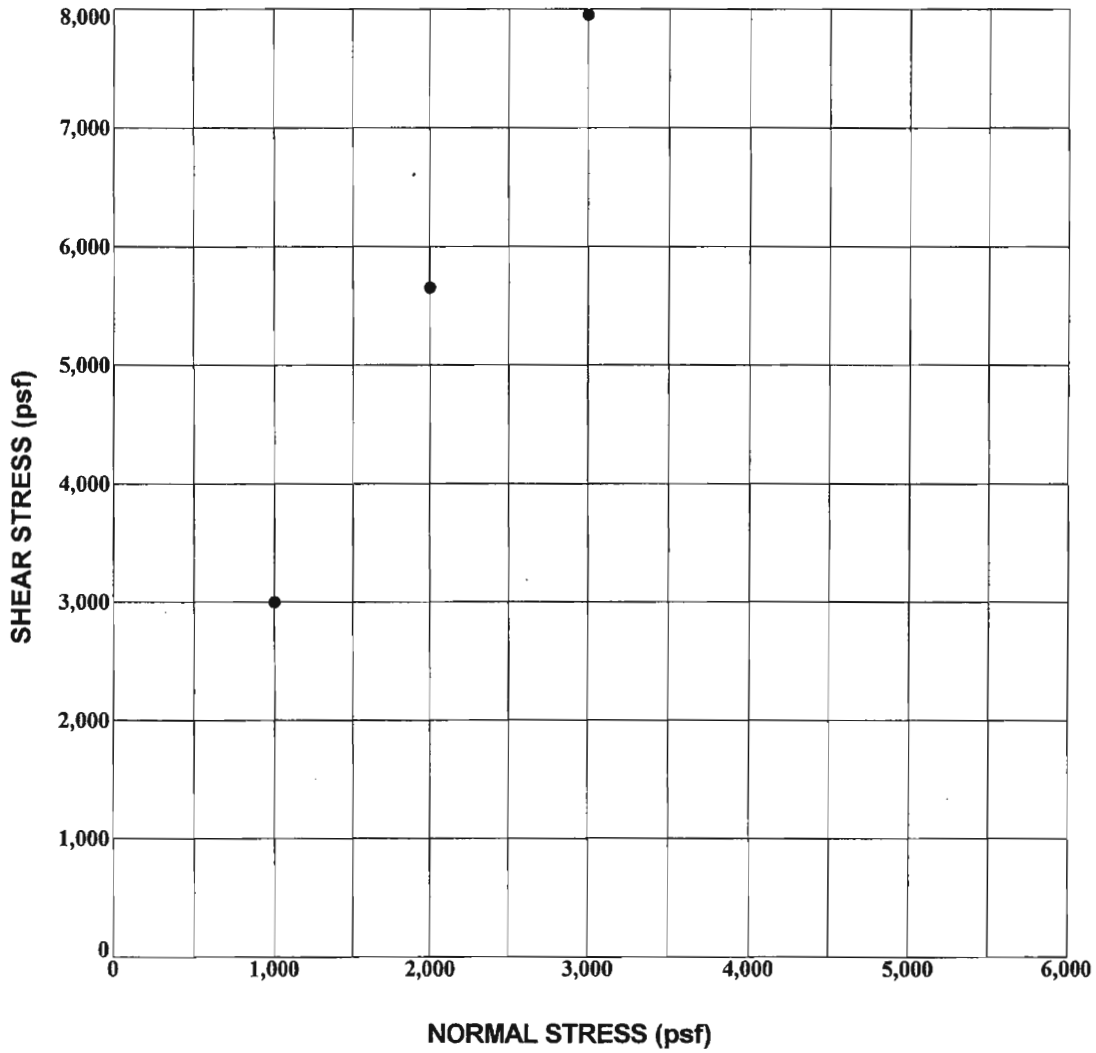

Source: B-4
Depth: 14.0 ft
Test Type: Consolidated - Drained
Soil Description: SILIICEOUS SHALE

Dry Density (pcf)	100.6	100.6	100.6
Initial Water Content (%)	16.4	16.4	16.4
Final Water Content (%)	34.9	29.8	28.6
Normal Stress (psf)	1000	2000	3000
Shear Stress(psf)	2997	5653	7949

KLEINFELDER
Bright People. Right Solutions.

PROJECT NO. 99579.GEO

DIRECT SHEAR TEST
NIPOMO PEDESTRIAN BRIDGES
BEECHNUT AVENUE
NIPOMO, CALIFORNIA

PLATE
B-5

SUMMARY OF TEST RESULTS	
Material Description	Lean Clay
Proposed Use	
Source	
Test Method	1557A
Maximum Dry Density (pcf)	105.0
Maximum Dry Density w/rock Correction(pcf)	
Optimum Water Content (%)	18.0
+3/4" Rock(%)	
Specific Gravity	
Lab Sample No.	B-4
Depth	0.0 - 5.0

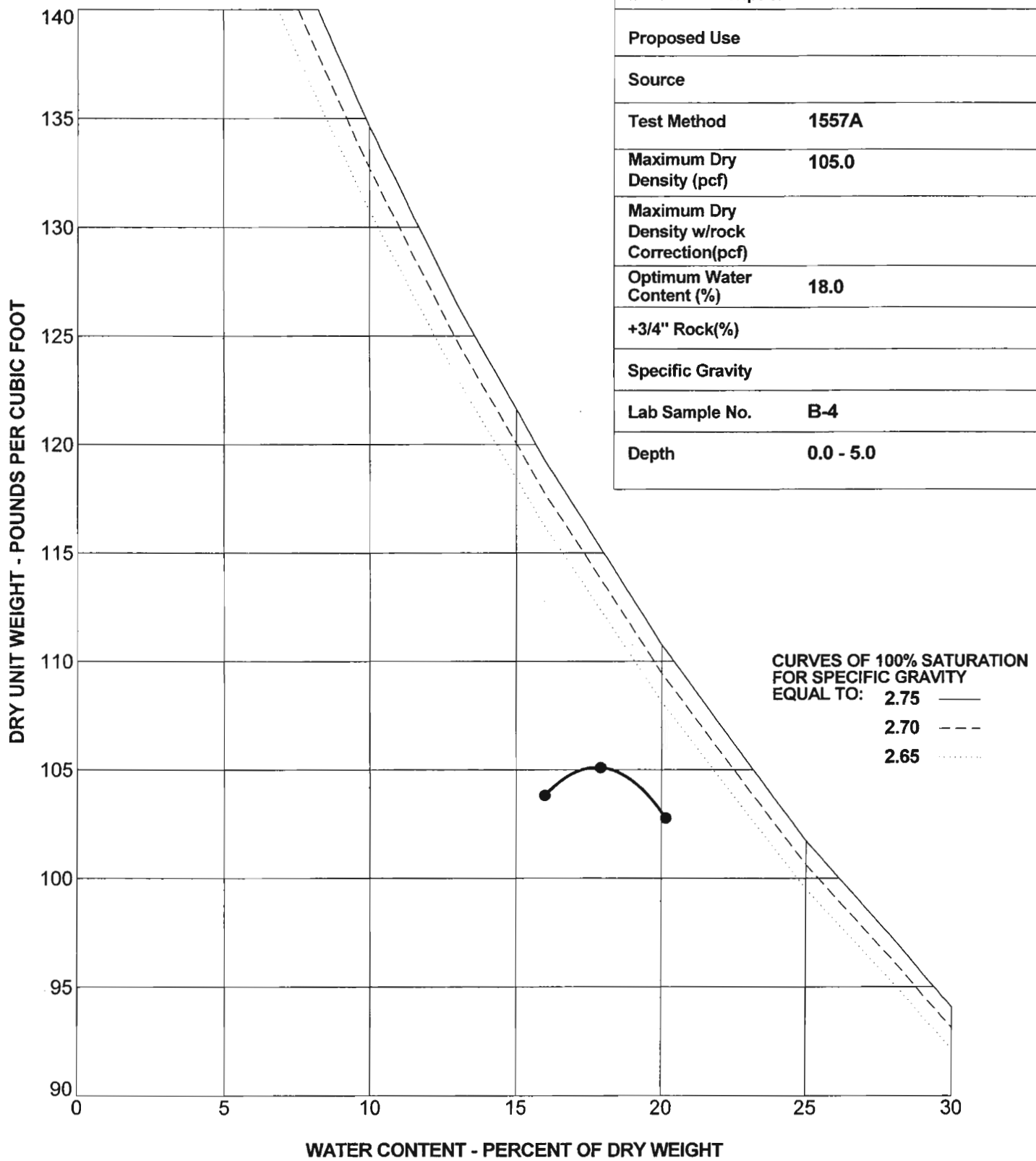

KLEINFELDER
Bright People. Right Solutions.

PROJECT NO. 99579.GEO

MOISTURE DENSITY RELATIONSHIP
NIPOMO BRIDGES
BEECHNUT AVENUE
NIPOMO, CALIFORNIA

PLATE
B-6

Caltrans Seismic Design Criteria Version 1.4 Figure B.5 ARS Curve for Soil Profile C (M=7.25+0.25) With Proximity Increase

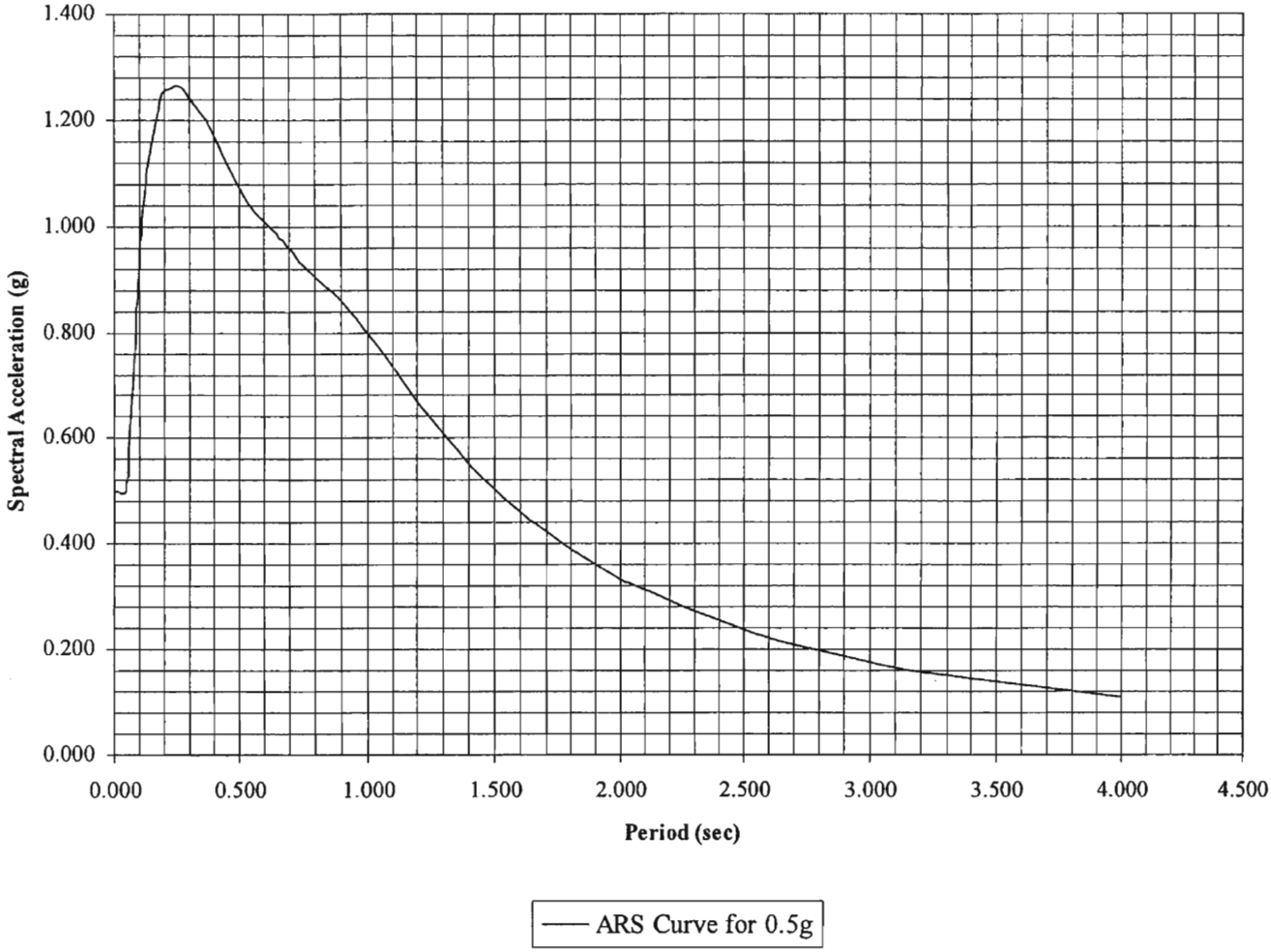

KLEINFELDER
1410 F Street
Fresno, California 93706
TEL: 559-486-0750 FAX: 559-442-5081
www.kleinfelder.com

MODIFIED ARS CURVE

NIPOMO BRIDGES

BEECHNUT AVENUE
NIPOMO, CALIFORNIA

Plate: C-1

Drawn by: N. Popenoe	Date: 1 Dec 08	Project Number: 99579	File Name: nipomoARS

CALTRANS SEISMIC DESIGN CRITERIA VERSION 1.4 (BASED ON ATC-32)
M7.25+0.25, Soil Type C With Proximity Increase

ARS Curve for 0.5g

Period (sec)	SA (g)	SA + 20% (g)
0.010	0.500	0.500
0.050	0.500	0.500
0.095	0.885	0.885
0.132	1.106	1.106
0.184	1.241	1.241
0.199	1.256	1.256
0.217	1.259	1.259
0.245	1.265	1.265
0.274	1.261	1.261
0.295	1.248	1.248
0.390	1.179	1.179
0.483	1.087	1.087
0.560	1.003	1.027
0.639	0.940	0.992
0.698	0.893	0.964
0.804	0.805	0.903
0.926	0.723	0.846
1.076	0.630	0.756
1.206	0.553	0.664
1.346	0.485	0.582
1.484	0.426	0.511
1.692	0.356	0.427
1.899	0.301	0.361
2.074	0.264	0.317
2.527	0.194	0.233
3.044	0.144	0.173
3.506	0.115	0.138
4.000	0.092	0.111

KLEINFELDER
1410 F Street
Fresno, California 93706
TEL: 559-486-0750 FAX: 559-442-5081
www.kleinfelder.com

ARS TABULAR DATA

NIPOMO BRIDGES

BEECHNUT AVENUE
NIPOMO, CALIFORNIA

Plate: C-2

Drawn by: N. Popenoe | Date: 1 Dec 08 | Project Number: 99579 | File Name: nipomoDATA

ATTACHMENT E

CONSTRUCTION DETAILS

DIST	COUNTY	ROUTE	POST MILES TOTAL PROJECT	SHEET NO.	TOTAL SHEETS

REGISTERED CIVIL ENGINEER

May 1, 2006
PLANS APPROVAL DATE

The State of California or its officers or agents shall not be responsible for the accuracy or completeness of electronic copies of this plan sheet.

To get to the Caltrans web site, go to: http://www.dot.ca.gov

REGISTERED PROFESSIONAL ENGINEER Greg W. Edwards C36386 Exp. 6-30-06 CIVIL STATE OF CALIFORNIA

NOTES:

Unless otherwise specified in the special provisions, all temporary warning signs shall have black legend on orange background.

California code are designated by (CA). Otherwise, Federal (MUTCD) codes are shown.

TYPICAL LANE CLOSURE WITH REVERSIBLE CONTROL

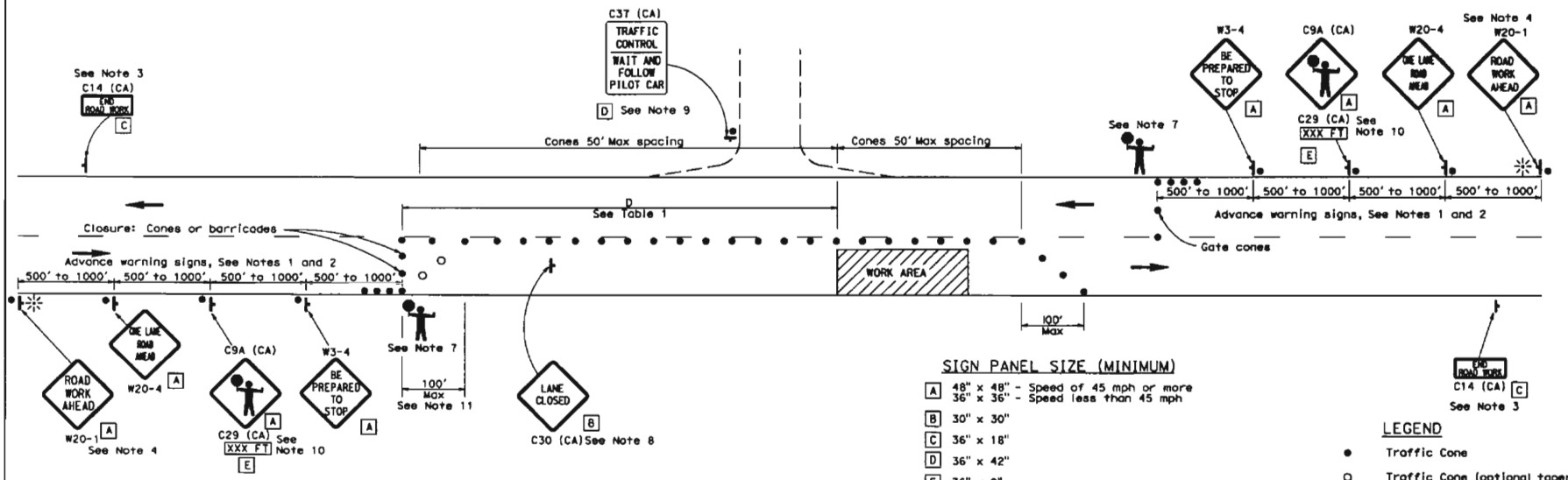

SIGN PANEL SIZE (MINIMUM)

- A 48" x 48" - Speed of 45 mph or more
  36" x 36" - Speed less than 45 mph
- B 30" x 30"
- C 36" x 18"
- D 36" x 42"
- E 36" x 9"

LEGEND

- Traffic Cone
- Traffic Cone (optional taper)
- Temporary Sign
- Direction of Travel
- Portable Flashing Beacon
- Flagger

NOTES:

1. Where approach speeds are low, advance warning signs may be placed at 300' spacing, and closer in urban areas.
2. Each advance warning sign in each direction of travel shall be equipped with at least two flags for daytime closure. Each flag shall be at least 16" x 16" in size and shall be orange or fluorescent red-orange in color. Flashing beacons shall be placed at the locations indicated for lane closure during hours of darkness.
3. A C14 (CA) "END ROAD WORK" sign, as appropriate, shall be placed at the end of the lane control unless the end of work area is obvious, or ends within a larger project's limits.
4. If the W20-1 sign would follow within 2000' of a stationary W20-1 or C11 (CA) "ROAD WORK NEXT ____ MILES", use a W20-4 sign for the first advance warning sign.
5. All cones used for lane closures during the hours of darkness shall be fitted with retroreflective bands (or sleeves) as specified in the specifications.
6. Portable delineators, placed at one-half the spacing indicated for traffic cones, may be used instead of cones for daytime closures only.
7. Additional advance flaggers may be required. Flagger should stand in a conspicuous place, be visible to approaching traffic as well as approaching vehicles after the first vehicle has stopped. During the hours of darkness, the flagging-station and flagger shall be illuminated and clearly visible to approaching traffic. The illumination footprint of the lighting on the ground shall be at least 20' in diameter. Place a minimum of four cones at 50' intervals in advance of flagger station as shown.
8. Place C30 (CA) "LANE CLOSED" sign at 500' to 1000' intervals throughout extended work areas. They are optional if the work area is visible from the flagger station.
9. When a pilot car is used, place a C37 (CA) "TRAFFIC CONTROL-WAIT AND FOLLOW PILOT CAR" sign at all intersections within traffic control area. Signs shall be clean and visible at all times.
10. An optional C29 (CA) sign may be placed below the C9A (CA) sign.
11. Traffic cones or barricades may be placed on the optional taper as shown, barricades shall be Type I, II, or III.

TABLE 1

Approach Speed	Minimum D	Downgrade Minimum D *		
		-3%	-6%	-9%
mph	ft	ft	ft	ft
25 and below	155	158	165	173
30	200	205	215	227
35	250	257	271	287
40	305	315	333	354
45	360	378	400	427
50	425	446	474	507
55	495	520	553	593
60	570	598	638	686
65	645	682	728	785

* Use on sustained downgrade steeper than -3 percent and longer than 1 mile.

STATE OF CALIFORNIA
DEPARTMENT OF TRANSPORTATION

TRAFFIC CONTROL SYSTEM FOR LANE CLOSURE ON TWO LANE CONVENTIONAL HIGHWAYS

NO SCALE

T13

DIST	COUNTY	ROUTE	POST MILES TOTAL PROJECT	SHEET NO.	TOTAL SHEETS

REGISTERED CIVIL ENGINEER

May 1, 2006
PLANS APPROVAL DATE

The State of California or its officers or agents shall not be responsible for the accuracy or completeness of electronic copies of this plan sheet.

To get to the Caltrans web site, go to: http://www.dot.ca.gov

REGISTERED PROFESSIONAL ENGINEER — CHRISTOPHER T. HUNT — No. C45803 — Exp. 12-31-06 — CIVIL — STATE OF CALIFORNIA

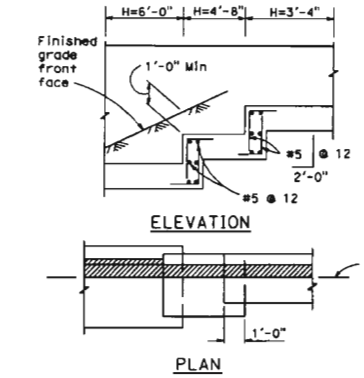

FOOTING STEP DETAILS

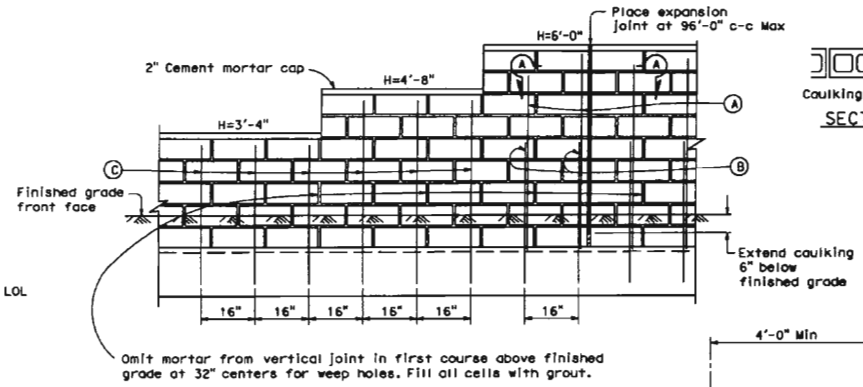

ELEVATION - MASONRY CONSTRUCTION

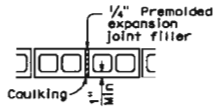

SECTION A-A

DESIGN DATA

Masonry: f_m = 500 psi f'_m = 1,500 psi f_s = 24,000 psi n = 20

Reinforced Concrete: f_c = 1,450 psi f'_c = 3,600 psi f_s = 24,000 psi n = 10

Earth = 120 lb/ft^3

Minimum allowable soil bearing capacity of foundation material = 2.0 ksf

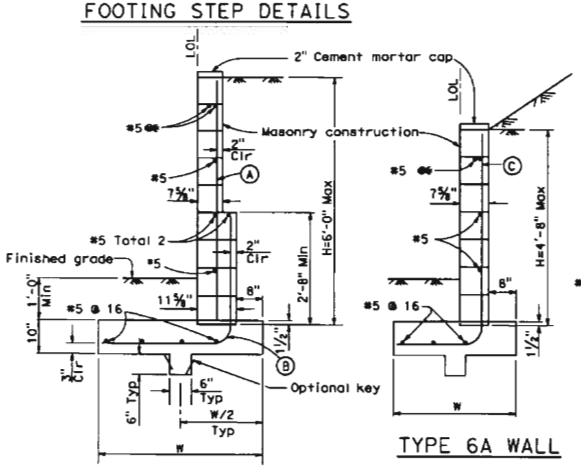

TYPE 6A WALL

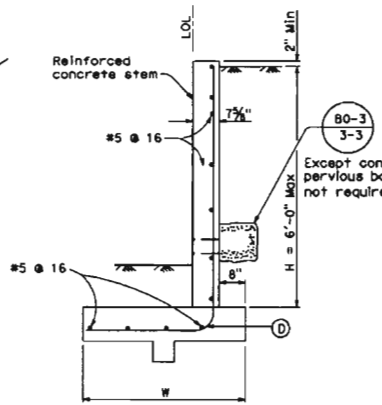

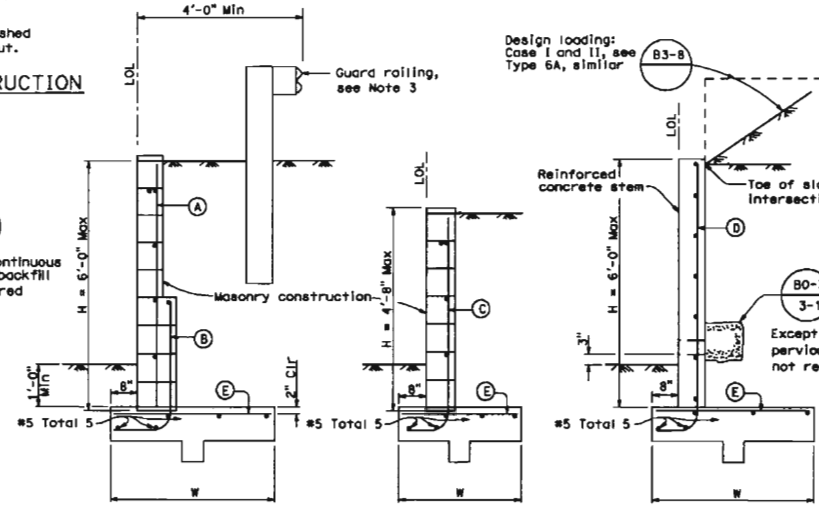

TYPE 6B WALL

Type	Design H	3'-4"	4'-0"	4'-8"	5'-4"	6'-0"
6A	W	3'-3"	3'-6"	3'-10"	4'-3"	4'-6"
6A	A				#5 @ 16	#5 @ 16
6A	B				#5 @ 16	#5 @ 16
6A	C	#5 @ 16	#5 @ 16	#5 @ 16		
6A	D	#5 @ 15	#5 @ 15	#5 @ 15	#5 @ 15	#5 @ 12

NOTES:

1. For details not shown at "6B", see "6A".
2. Type 6 retaining wall shall be limited to use for walls of Design H of 6'-0" or less.
3. Where traffic is adjacent to the top of wall, guard railing should be set back from the top front face of wall at least 4'-0".
4. Unless otherwise stipulated, the Contractor will have the option of constructing the Type 6 walls of either masonry or reinforced concrete.
5. For reinforced concrete wall stem joint details, See B0-3 3-3 and B0-3 3-4.
6. No splices are allowed on A, B and C bars.
7. At D bar, no splices are allowed within 1'-8" above the top of footing.

Type	Design H	3'-4"	4'-0"	4'-8"	5'-4"	6'-0"
6B	W	2'-9"	3'-0"	3'-4"	3'-9"	4'-0"
6B	A				#5 @ 16	#5 @ 16
6B	B				#5 @ 16	#5 @ 16
6B	C	#5 @ 16	#5 @ 16	#5 @ 16		
6B	D	#5 @ 15	#5 @ 15	#5 @ 15	#5 @ 15	#5 @ 12
6B	E	#5 @ 15	#5 @ 15	#5 @ 15	#5 @ 15	#5 @ 12

STATE OF CALIFORNIA
DEPARTMENT OF TRANSPORTATION

RETAINING WALL TYPE 6 6'-0" MAXIMUM

NO SCALE

B3-11

2006 STANDARD PLAN B3-11

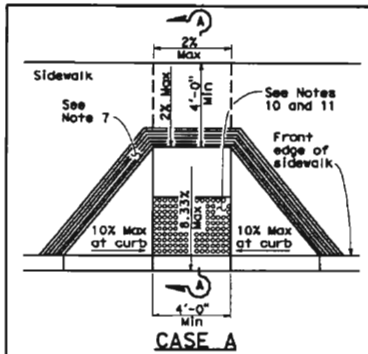

CASE A

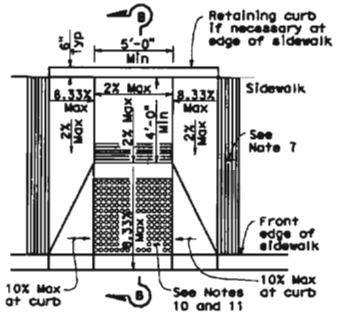

CASE B

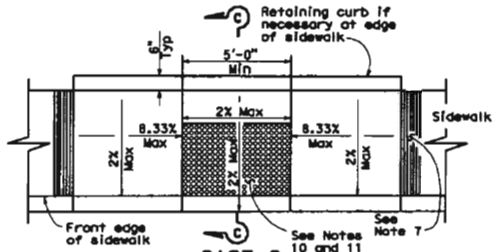

CASE C

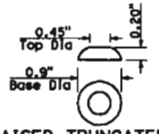

RAISED TRUNCATED DOME

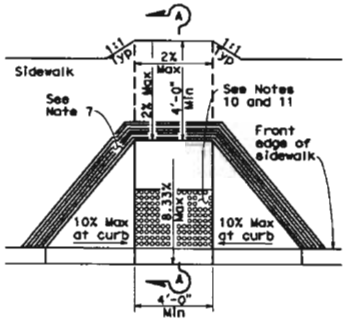

CASE D

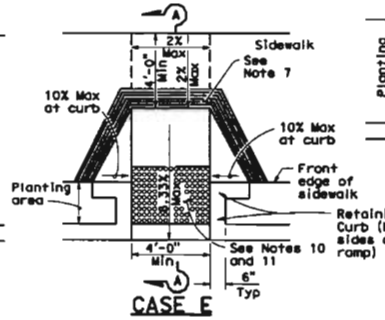

CASE E

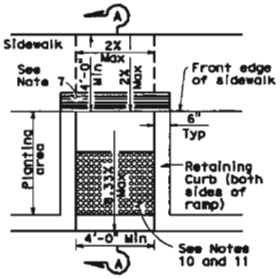

CASE F

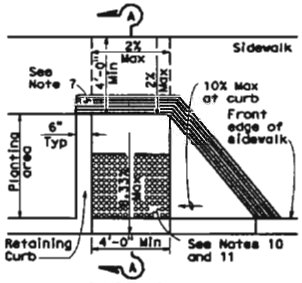

CASE G
See Note 4

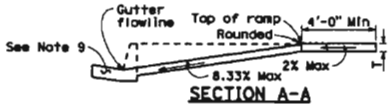

SECTION A-A

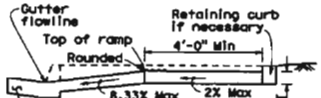

SECTION B-B
Depress entire sidewalk as required

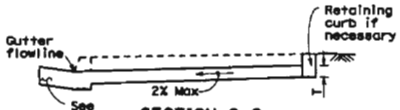

SECTION C-C

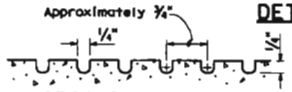

GROOVING DETAIL

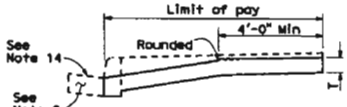

RETROFIT DETAIL
Existing curb and sidewalk

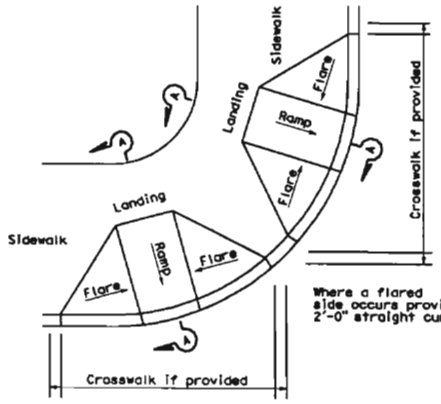

DETAIL A
TYPICAL TWO-RAMP CORNER INSTALLATION
See Note 1

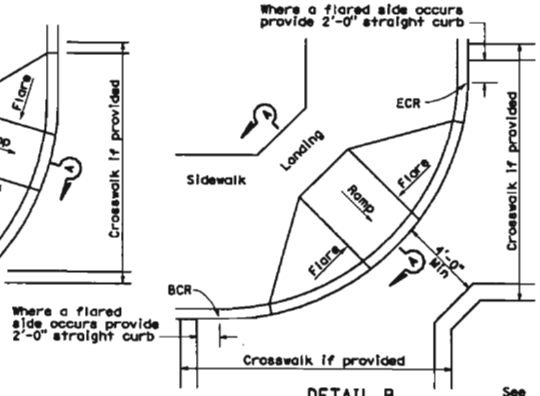

DETAIL B
TYPICAL ONE-RAMP CORNER INSTALLATION
See Notes 1 and 3

NOTES:

To accompany plans dated _____

1. As site conditions dictate, Case A through Case G curb ramps may be used for corner installations similar to those shown in Detail A and Detail B. The case of curb ramps used in Detail A do not have to be the same. Case A through Case G curb ramps also may be used at mid block locations, as site conditions dictate.
2. If distance from curb to back of sidewalk is too short to accommodate ramp and 4'-0" platform (landing) as shown in Case A, the sidewalk may be depressed longitudinally as in Case B, or C or may be widened as in Case D.
3. When ramp is located in center of curb return, crosswalk configuration must be similar to that shown for Detail B.
4. As site conditions dictate, the retaining curb side and the flared side of the Case G ramp shall be constructed in reversed position.
5. If located on a curve, the sides of the ramp need not be parallel, but the minimum width of the ramp shall be 4'-0".
6. Side slope of ramp flares vary uniformly from a maximum of 10% at curb to conform with longitudinal sidewalk slope adjacent to top of the ramp, except in Case C and Case F.
7. The curb ramp shall be outlined, as shown, with a 1'-0" wide border with 1/4" grooves approximately 3/4" on center. See grooving detail.
8. Transitions from ramps and landing to walks, gutters or streets shall be flush and free of abrupt changes.
9. Maximum slopes of adjoining gutters, the road surface immediately adjacent to the curb ramp or accessible route shall not exceed 5 percent within 4'-0" of the top and bottom of the curb ramp.
10. Curb ramps shall have a detectable warning surface that extends the full width and 3'-0" depth of the ramp. Detectable Warning Surfaces shall conform to the details on this plan and the requirements in the Special Provisions.
11. The edge of the detectable warning surface nearest the street shall be between 6" and 8" from the gutter flowline.
12. Sidewalk and ramp thickness, "T", shall be 3 1/2" minimum.
13. Utility pull boxes, manholes, vaults and all other utility facilities within the boundaries of the curb ramp will be relocated or adjusted to grade by the owner prior to, or in conjunction with, curb ramp construction.
14. For retrofit conditions, removal and replacement of curb apron will be at the Contractor's option, unless otherwise shown on project plans.

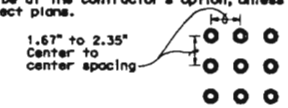

RAISED TRUNCATED DOME PATTERN (IN-LINE)
DETECTABLE WARNING SURFACE
See Note 10

DIST	COUNTY	ROUTE	POST MILES TOTAL PROJECT	SHEET NO.	TOTAL SHEETS

REGISTERED CIVIL ENGINEER
September 1, 2006
PLANS APPROVAL DATE
Doctor David Cardoso C41957 3-31-08 CIVIL STATE OF CALIFORNIA
The State of California or its officers or agents shall not be responsible for the accuracy or completeness of electronic copies of this plan sheet.

STATE OF CALIFORNIA
DEPARTMENT OF TRANSPORTATION

CURB RAMP DETAILS

NO SCALE

RSP A88A DATED SEPTEMBER 1, 2006 SUPERSEDES STANDARD PLAN A88A
DATED MAY 1, 2006 - PAGE 115 OF THE STANDARD PLANS BOOK DATED MAY 2006.

REVISED STANDARD PLAN RSP A88A

2006 REVISED STANDARD PLAN RSP A88A

Revisions					
Description	Approved	Date	Description	Approved	Date
REPLACE "ZONES" WITH "USES"	GDM	NOV 08			

REFER TO STANDARD DRAWING B-3 FOR URBAN COMMERCIAL-INDUSTRIAL LAYOUT STANDARDS

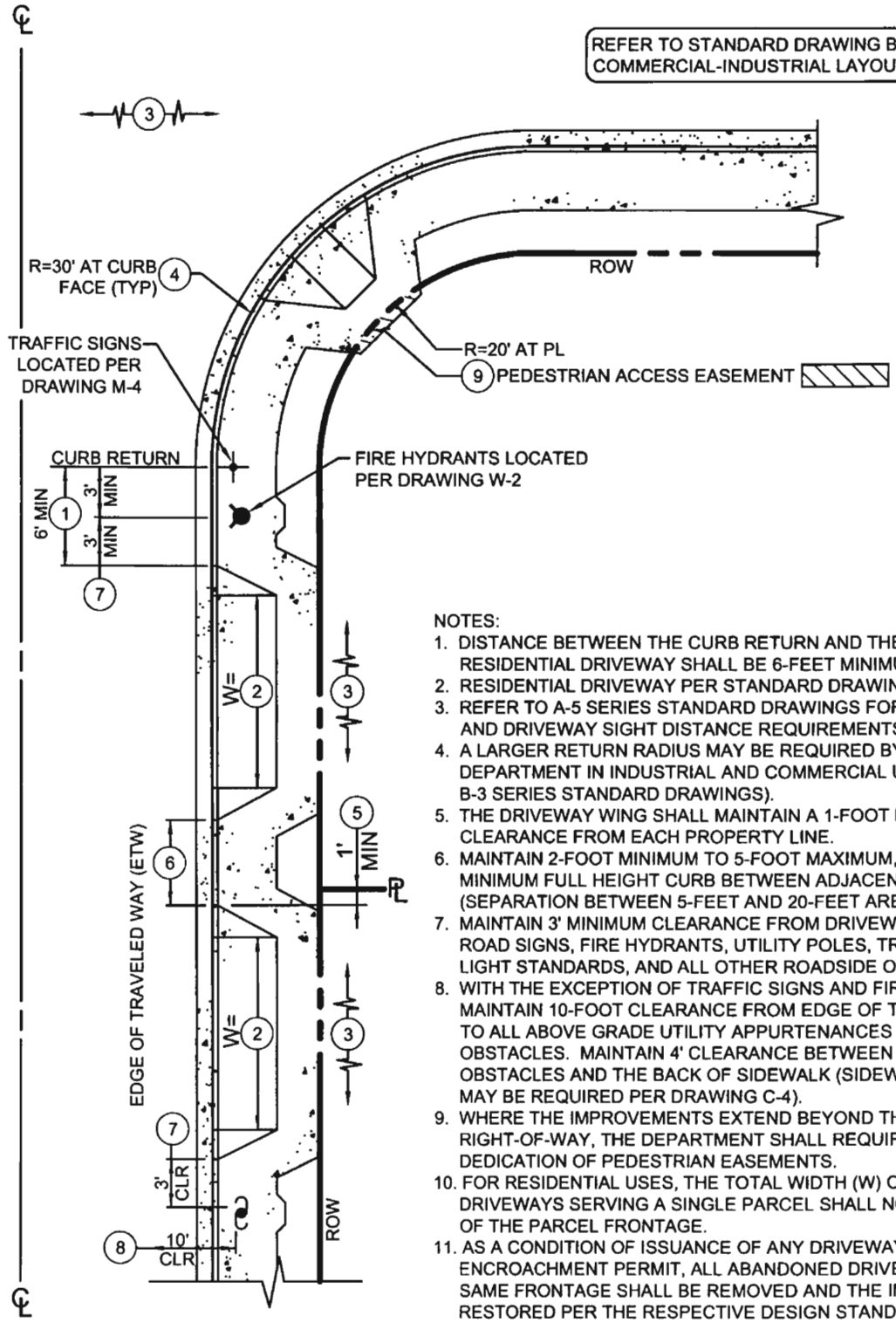

NOTES:

1. DISTANCE BETWEEN THE CURB RETURN AND THE FIRST RESIDENTIAL DRIVEWAY SHALL BE 6-FEET MINIMUM.
2. RESIDENTIAL DRIVEWAY PER STANDARD DRAWING B-2a.
3. REFER TO A-5 SERIES STANDARD DRAWINGS FOR INTERSECTION AND DRIVEWAY SIGHT DISTANCE REQUIREMENTS.
4. A LARGER RETURN RADIUS MAY BE REQUIRED BY THE DEPARTMENT IN INDUSTRIAL AND COMMERCIAL USES (REFER TO B-3 SERIES STANDARD DRAWINGS).
5. THE DRIVEWAY WING SHALL MAINTAIN A 1-FOOT MINIMUM CLEARANCE FROM EACH PROPERTY LINE.
6. MAINTAIN 2-FOOT MINIMUM TO 5-FOOT MAXIMUM, OR 20-FOOT MINIMUM FULL HEIGHT CURB BETWEEN ADJACENT DRIVEWAYS (SEPARATION BETWEEN 5-FEET AND 20-FEET ARE NOT ALLOWED).
7. MAINTAIN 3' MINIMUM CLEARANCE FROM DRIVEWAY WING TO ROAD SIGNS, FIRE HYDRANTS, UTILITY POLES, TRAFFIC SIGNALS, LIGHT STANDARDS, AND ALL OTHER ROADSIDE OBSTACLES.
8. WITH THE EXCEPTION OF TRAFFIC SIGNS AND FIRE HYDRANTS, MAINTAIN 10-FOOT CLEARANCE FROM EDGE OF TRAVELED WAY TO ALL ABOVE GRADE UTILITY APPURTENANCES AND ROADSIDE OBSTACLES. MAINTAIN 4' CLEARANCE BETWEEN ALL SUCH OBSTACLES AND THE BACK OF SIDEWALK (SIDEWALK WIDENING MAY BE REQUIRED PER DRAWING C-4).
9. WHERE THE IMPROVEMENTS EXTEND BEYOND THE RIGHT-OF-WAY, THE DEPARTMENT SHALL REQUIRE THE DEDICATION OF PEDESTRIAN EASEMENTS.
10. FOR RESIDENTIAL USES, THE TOTAL WIDTH (W) OF ALL DRIVEWAYS SERVING A SINGLE PARCEL SHALL NOT EXCEED 60% OF THE PARCEL FRONTAGE.
11. AS A CONDITION OF ISSUANCE OF ANY DRIVEWAY ENCROACHMENT PERMIT, ALL ABANDONED DRIVEWAYS ON THE SAME FRONTAGE SHALL BE REMOVED AND THE IMPROVEMENTS RESTORED PER THE RESPECTIVE DESIGN STANDARDS.
12. UNDER NO CIRCUMSTANCES SHALL UTILITY LIDS AND CONCRETE COLLARS BE LOCATED WITHIN DRIVEWAY APRONS.

SAN LUIS OBISPO COUNTY DEPARTMENT OF PUBLIC WORKS

URBAN DRIVEWAY

LAYOUT STANDARDS

Scale:	Issued:
NTS	Aug. 2006
Drawing No:	B-2
Sheet No:	1 OF 1

Revisions					
Description	Approved	Date	Description	Approved	Date
NOTE 3	REM	NOV 07			

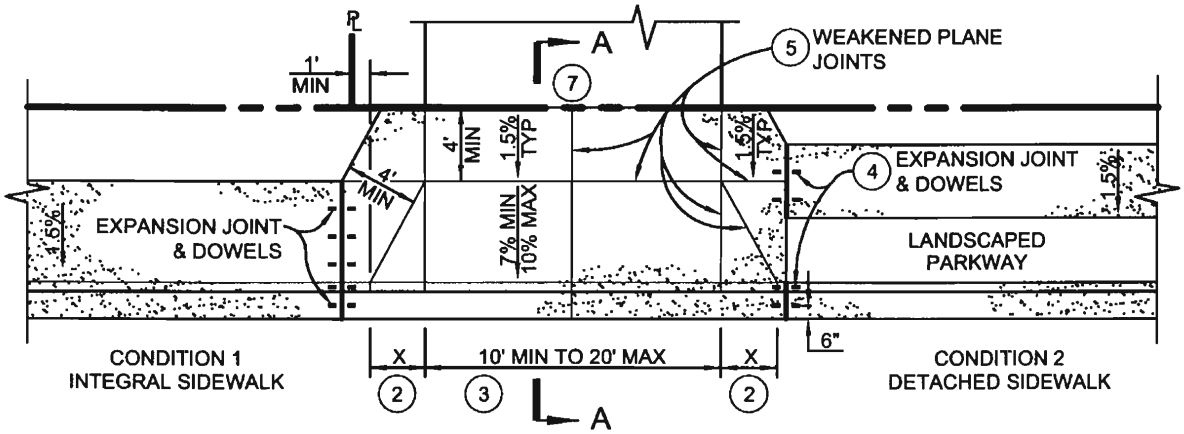

PLAN

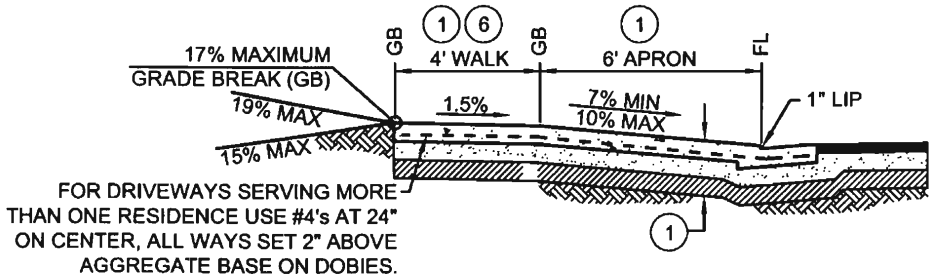

SECTION A-A

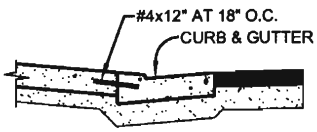

WHEN CURB & GUTTER IS PLACED PRIOR TO DRIVEWAY CONSTRUCTION THEN THE NEW DRIVEWAY SHALL BE DOWELED INTO THE CURB AND GUTTER WITH #4x12" AT 18" OC

COLD JOINT DETAIL

NOTES:

1. CONCRETE DRIVEWAY SHALL CONFORM TO STATE STANDARD 90-1.01, 520 LBS/CY CEMENTITIOUS MATERIAL [5-1/2 SACK]. CONCRETE CURING SHALL BE BY PIGMENTED CURING COMPOUND METHOD USING WHITE PIGMENT TYPE. TYPICAL SECTION SHALL BE:
   - 6-INCH MIN PORTLAND CEMENT CONCRETE, OVER
   - 6" MIN CLASS II AGGREGATE BASE TO 95% RELATIVE COMPACTION, OVER
   - 12" MINIMUM SUBGRADE TO 95% RELATIVE COMPACTION

   IF THE R-VALUE OF THE NATIVE MATERIAL IS 55 OR GREATER THEN THE 6" OF AGGREGATE BASE MAY BE SUBSTITUTED WITH COMPACTED NATIVE MATERIAL.
   A COURSE BROOM FINISH TRANSVERSE TO THE LINE OF TRAFFIC SHALL BE USED ON THE APRON AND WINGS. THE 4-FOOT WIDE SIDEWALK SHALL HAVE A LIGHT BROOM FINISH PARALLEL TO THE LINE OF TRAFFIC.
2. X = 3-FEET (6h:1v) EXCEPT FOR CURB HEIGHTS OVER 8-INCHES WHERE 4h:1v SLOPES SHALL BE USED ON CURB SLOPE.
3. DRIVEWAY WIDTH (W) SHALL BE 10-FEET MIN AND 20-FEET MAX FOR RESIDENTIAL ACCESS. FOR DRIVEWAYS SERVING MORE THAN ONE RESIDENCE W EQUALS THE INTERIOR ROAD WIDTH AS GOVERNED BY THE LOCAL FIRE AGENCY STANDARDS.
4. EXPANSION JOINTS (EJ) SHALL BE CONSTRUCTED AS SHOWN. 1/2"Øx18" SMOOTH, GREASED DOWELS SHALL BE PLACED IN THE EJ, ONE IN CURB FACE, ONE IN GUTTER, AND AT 18-INCHES ON CENTER IN SIDEWALKS PER STANDARD DRAWING C-1.
5. WEAKENED PLANE JOINTS (WPJ) SHALL BE CONSTRUCTED AS SHOWN AND PER STANDARD DRAWING C-1.
6. THE CROSS SLOPE OF THE 4-FOOT WIDE SIDEWALK SHALL BE 1.5% (3/16-INCH PER FOOT), BUT NOT EXCEED 2% (1/4-INCH PER FOOT). MINIMUM SIDEWALK WIDTH FOR CLEAR PASSAGE SHALL BE MAINTAINED (NO OBSTACLES LOCATED WITHIN).
7. WHERE THE IMPROVEMENTS EXTEND BEYOND THE RIGHT-OF-WAY, THE ACQUISITION OF PEDESTRIAN EASEMENTS SHALL BE REQUIRED BY THE DEPARTMENT.
8. REFER TO A-5 SERIES STANDARD DRAWINGS FOR DRIVEWAY SIGHT DISTANCE REQUIREMENTS.
9. FOR NEW DRIVEWAY CONSTRUCTION AGAINST EXISTING ROADWAY, SAWCUT TO REMOVE EXISTING ROADWAY AND RECONSTRUCT PER STANDARD DRAWINGS R-2 OR R-2a.
10. THE HIGH VOLUME DRIVEWAY STANDARD B-3b SHALL BE USED AT ENTRANCES TO RESIDENTIAL DRIVEWAYS THAT EXCEED 200 VEHICLES PER PM PEAK HOUR AND EXIT ONTO AN ARTERIAL ROAD. THE DEPARTMENT RESERVES THE RIGHT TO REQUIRE THE USE OF A HIGH VOLUME DRIVEWAY BASED ON OTHER EXTENUATING CONDITIONS.
11. UNDER NO CIRCUMSTANCES SHALL UTILITY LIDS AND CONCRETE COLLARS BE LOCATED WITHIN DRIVEWAY APRONS.

SAN LUIS OBISPO COUNTY DEPARTMENT OF PUBLIC WORKS

URBAN DRIVEWAY

RESIDENTIAL DRIVEWAY

Scale:	Issued:
1"=10'	Aug. 2006

Drawing No: B-2a

Sheet No: 1 OF 1

Revisions					
Description	Approved	Date	Description	Approved	Date

NOTES:

1. EXPANSION JOINTS (EJ) SHALL BE PLACED AT CURB RETURNS, DRIVEWAYS, STORM DRAIN CATCH BASINS, AROUND UTILITY POLES, AT LONGITUDINAL CURB GUTTER AND SIDEWALK INTERVALS NOT TO EXCEED 30-FEET, AND AT ALL OTHER LOCATIONS AS DIRECTED BY THE DEPARTMENT. THE INTERVALS BETWEEN EXPANSION JOINTS SHALL VARY TO ALLOW MATCHING OF JOINTS IN ADJACENT EXISTING IMPROVEMENTS AS APPLICABLE.
2. WEAKENED PLANE JOINTS (WPJ) SHALL BE A MINIMUM 1-INCH IN DEPTH AND PLACED AT LONGITUDINAL CURB GUTTER AND SIDEWALK INTERVALS NOT EXCEEDING 10-FEET BETWEEN EXPANSION JOINTS. THE INTERVALS BETWEEN WEAKENED PLANE JOINTS SHALL VARY TO ALLOW MATCHING OF JOINTS IN ADJACENT EXISTING IMPROVEMENTS AS APPLICABLE.
3. 1/2"Ø x 18" SMOOTH, GREASED DOWELS SHALL BE PLACED AT ALL EXPANSION JOINTS, ONE IN THE NEW CURB FACE, ONE IN THE NEW GUTTER, AND AT 18-INCHES ON CENTER IN NEW SIDEWALK.
4. WHEN PLACED IN SIDEWALKS, BOTH EXPANSION JOINTS AND WEAKENED PLANE JOINTS SHALL EXTEND THROUGH THE ADJACENT CURB AND GUTTER.
5. REFER TO RESPECTIVE IMPROVEMENT (CURB, GUTTER, SIDEWALK, RAMP, DRIVEWAY, ETC) STANDARD DRAWING FOR ADDITIONAL CONSTRUCTION INFORMATION.

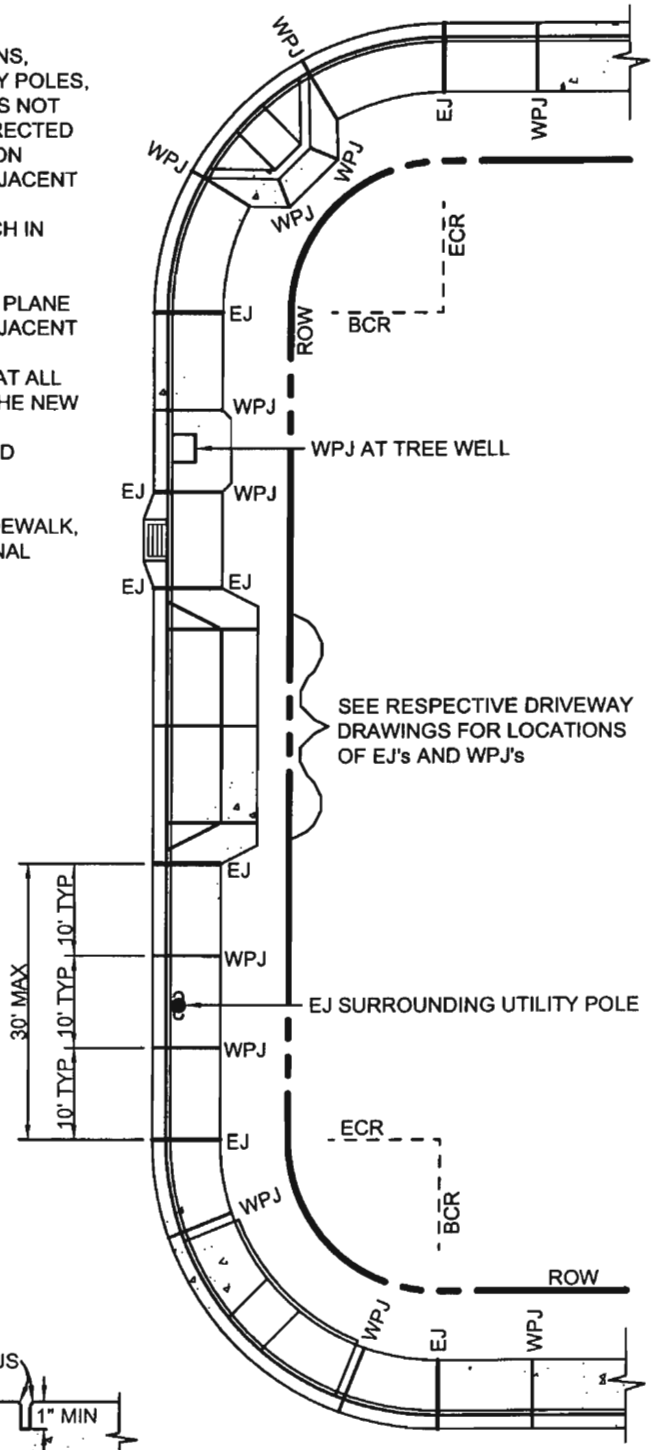

REFER TO DRAWING R-3 FOR REPAIR OF EXISTING SIDEWALKS

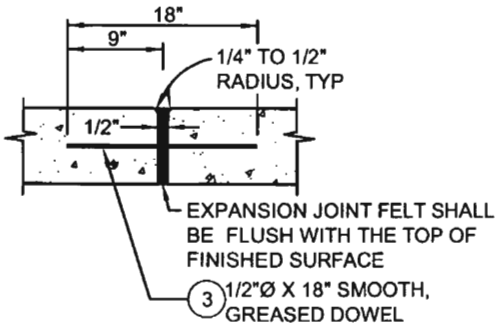

EXPANSION JOINT 1

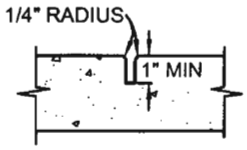

WEAKENED PLANE JOINT 2

SAN LUIS OBISPO COUNTY DEPARTMENT OF PUBLIC WORKS

EXPANSION & WEAKENED PLANE JOINT REQUIREMENTS

Scale:	Issued:
1"=20'	Aug. 2006

Drawing No: C-1

Sheet No: 1 OF 1

Revisions					
Description	Approved	Date	Description	Approved	Date
NOTE 2	REM	NOV 07			

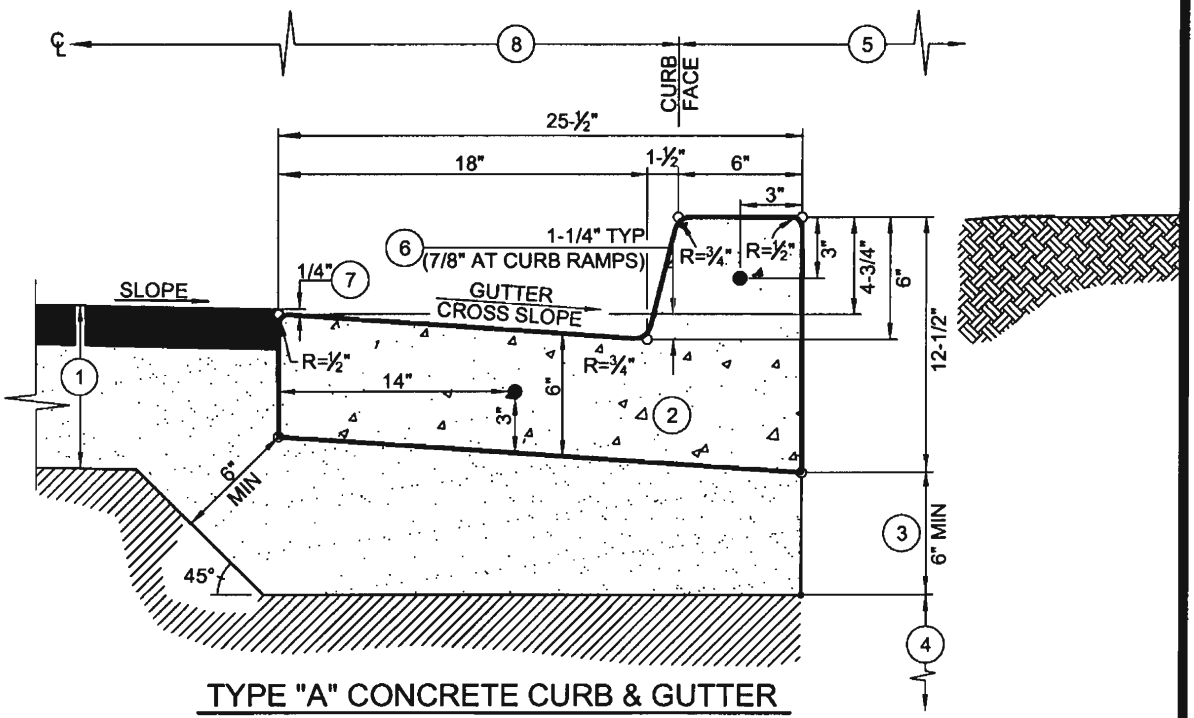

TYPE "A" CONCRETE CURB & GUTTER

NOTES:

1. ROADWAY STRUCTURAL SECTION PER PLAN OR AS EXISTING.
2. CONCRETE CURB SHALL CONFORM TO STATE STANDARD 90-1.01, 520 LBS CEMENTITIOUS MATERIAL PER CUBIC YARD [5-1/2 SACK]. EXTRUDED CURB SHALL CONFORM TO STATE STANDARD 73-1.01. CONCRETE CURING SHALL BE BY PIGMENTED CURING COMPOUND METHOD USING WHITE PIGMENT TYPE.
3. 6" MINIMUM CLASS II AGGREGATE BASE TO 95% RELATIVE COMPACTION OR MATCH BASE THICKNESS REQUIREMENT FOR NEW OR EXISTING ROAD SECTION, WHICHEVER IS GREATEST.
4. 12" MINIMUM SUBGRADE TO 95% RELATIVE COMPACTION.
5. SUBGRADE AND AGGREGATE BASE COMPACTION REQUIREMENTS SHALL EXTEND TO THE BACK OF CURB OR TO THE BACK OF ATTACHED SIDEWALK (WHICHEVER CONDITION IS APPLICABLE).
6. GUTTER CROSS SLOPE SHALL NOT EXCEED 5% ACROSS CURB RAMPS PER DETAIL BELOW.
7. THE ROADWAY FINISHED SURFACE SHALL BE 1/4" ABOVE THE GUTTER LIP.
8. PAVEMENT WIDTH MEASURED FROM ROAD CENTERLINE TO THIS POINT.
9. 1/2"Ø x 18" LONG GREASED SMOOTH DOWELS (●) SHALL BE CONSTRUCTED AT ALL EXPANSION JOINTS AND CONSTRUCTION JOINTS, REFER TO STANDARD DRAWING C-1.
10. EXPANSION JOINTS SHALL BE CONSTRUCTED AT 30-FEET MAXIMUM INTERVALS, AT ENDS OF ALL CURB RETURNS, AND EACH SIDE OF DRIVEWAY DEPRESSIONS PER STANDARD DRAWING C-1. THE INTERVALS BETWEEN EXPANSION JOINTS SHALL VARY TO ALLOW MATCHING OF JOINTS ADJACENT EXISTING IMPROVEMENTS WHEN APPLICABLE.
11. WEAKENED PLANE JOINTS SHALL BE CONSTRUCTED AT 10-FEET MAXIMUM INTERVALS PER STANDARD DRAWING C-1. THE INTERVALS BETWEEN EXPANSION JOINTS SHALL VARY TO ALLOW MATCHING OF JOINTS ADJACENT EXISTING IMPROVEMENTS WHEN APPLICABLE.
12. UNDER NO CIRCUMSTANCES SHALL UTILITY LIDS AND CONCRETE COLLARS BE LOCATED WITHIN THE CURB & GUTTER.

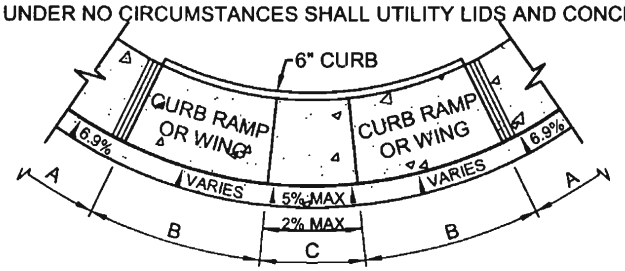

NOTES:

A. GUTTER CROSS SLOPE = 1-1/4" IN 18" = 6.9%
B. GUTTER CROSS SLOPE TRANSITION ZONE (VARIES)
C. GUTTER CROSS SLOPE = 7/8" IN 18" = 4.9% (5% MAX)
LONGITUDINAL SLOPE = 2% MAX

TYPICAL GUTTER TRANSITION AT CURB RAMP

SAN LUIS OBISPO COUNTY DEPARTMENT OF PUBLIC WORKS

TYPE "A" CONCRETE CURB & GUTTER

Scale:	Issued:
NTS	Aug. 2006
Drawing No:	C-2
Sheet No:	1 OF 1

Revisions

Description	Approved	Date	Description	Approved	Date
NOTE 1, ADD NOTE 11, "TYPICAL" TO JOINT DETAIL, & LABEL "PARKWAY"	REM	NOV 07			

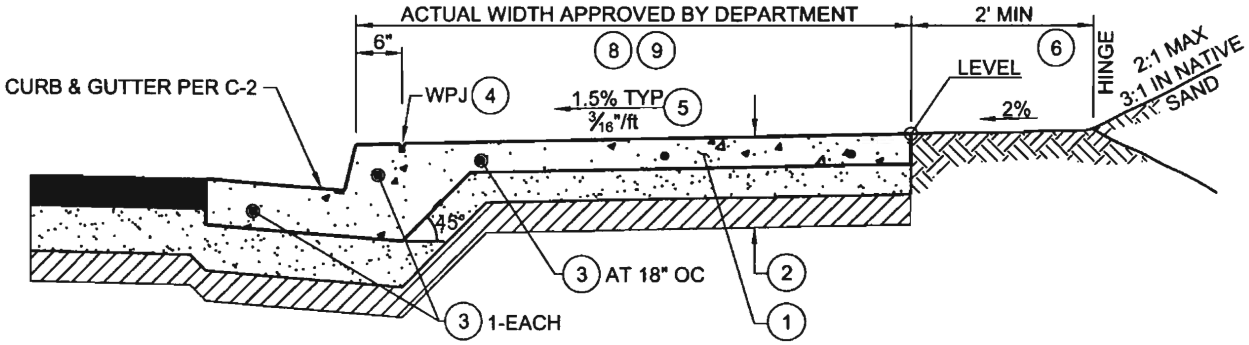

INTEGRAL SIDEWALK (MONOLITHIC)

(SEE OPTIONAL JOINT DETAIL)

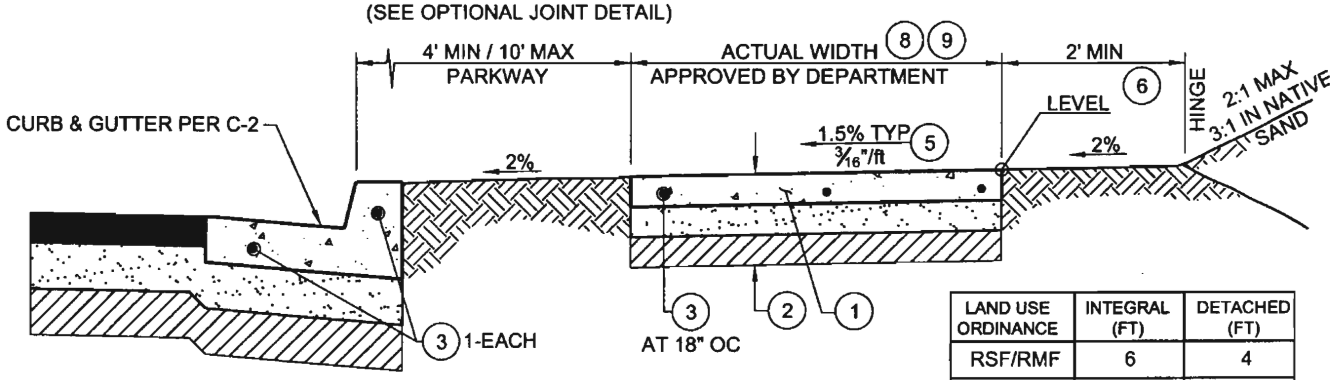

DETACHED OR MEANDERING SIDEWALK

LAND USE ORDINANCE	INTEGRAL (FT)	DETACHED (FT)
RSF/RMF	6	4
CR	10	6
CS	6	4
OP	8	4
IND	6	4

SIDEWALK WIDTH TABLE

NOTES:

1. CONCRETE SIDEWALK SHALL CONFORM TO STATE STANDARD 90-1.01, MINOR (520 LBS CEMENTITIOUS MATERIAL PER CUBIC YARD [5-1/2 SACK]). CONCRETE CURING SHALL BE BY PIGMENTED CURING COMPOUND METHOD USING WHITE PIGMENT TYPE.
2. TYPICAL SECTION SHALL BE:
   - 4-INCH MIN PCC (6-INCH OR 8-INCH WHEN WITHIN A DRIVEWAY), OVER
   - 4-INCH MIN CLASS II AGGREGATE BASE TO 95% RELATIVE COMPACTION, OVER
   - 12-INCH MIN SUBGRADE TO 95% RELATIVE COMPACTION

   IF THE R-VALUE OF THE NATIVE MATERIAL IS 55 OR GREATER THEN THE 4-INCH OF AGGREGATE BASE MAY BE SUBSTITUTED WITH COMPACTED NATIVE MATERIAL.
3. EXPANSION JOINTS (EJ) SHALL BE CONSTRUCTED AT LONGITUDINAL INTERVALS NOT EXCEEDING 30-FEET. 1/2"Ø x 18" SMOOTH, GREASED DOWELS SHALL BE PLACED IN THE EJ, ONE IN CURB FACE, ONE IN GUTTER, AND AT 18-INCHES ON CENTER IN SIDEWALKS PER STANDARD DRAWING C-1.
4. WEAKENED PLANE JOINTS (WPJ) SHALL BE CONSTRUCTED BETWEEN EXPANSION JOINTS AT LONGITUDINAL INTERVALS NOT EXCEEDING 10-FEET, AND AT 6-INCHES BEHIND THE CURB FACE FOR ATTACHED SIDEWALKS PER STANDARD DRAWING C-1.
5. THE CROSS SLOPE OF THE SIDEWALK SHALL NOT EXCEED 2% (1/4-INCH PER 12-INCHES), 1.5% (3/16-INCH PER 12-INCHES) IS RECOMMENDED.
6. THE 2-FOOT BENCH IS NOT REQUIRED FOR ADJOINING SLOPES OF 5h:1v OR FLATTER.
7. ALTHOUGH THE PROJECT CONDITIONS OF APPROVAL OR THE AREA SPECIFIC PLAN MAY REQUIRE AN ALTERNATIVE SIDEWALK CONFIGURATION, THE CONSTRUCTION SPECIFICATIONS OF THIS STANDARD SHALL APPLY.
8. THE SIDEWALK SHALL BE WIDENED WHERE REQUIRED TO ALLOW FOR A 4-FOOT CLEAR PASSAGE AROUND ALL ABOVE GRADE OBSTACLES LOCATED WITHIN THE SIDEWALK.
9. WATER PURVEYOR METER BOXES ARE ALLOWED WITHIN THE SIDEWALK PROVIDED THAT ALL LIDS AND LIDS WITH A.M.R. SYSTEMS ARE SET FLUSH WITH THE SIDEWALK.
10. ALL UTILITY VAULTS AND LIDS MUST BE LOCATED OUTSIDE OF THE SIDEWALK OR HAVE PRIOR DEPARTMENT APPROVAL FOR LOCATION WITHIN THE SIDEWALK. UTILITY LIDS WITHIN THE SIDEWALK SHALL HAVE A NON-SLIP SURFACE.
11. SEE DRAWING M-5 FOR TREE PLANTING REQUIREMENTS WITHIN RIGHT-OF-WAY.

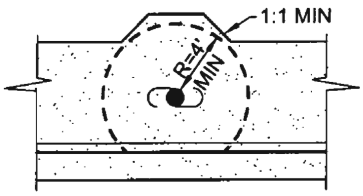

SIDEWALK SHALL BE WIDENED BEHIND ALL ABOVE GRADE OBSTACLES TO PROVIDE A 4-FEET MINIMUM CLEARANCE.

8 SIDEWALK WIDENING DETAIL
NTS

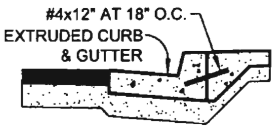

WHEN EXTRUDED CURB & GUTTER IS USED AND SIDEWALK PORTION IS NOT PLACED WITHIN 1-HOUR THEN REBAR SHALL BE PLACED PER THIS JOINT DETAIL.

TYPICAL JOINT DETAIL
NTS

SAN LUIS OBISPO COUNTY DEPARTMENT OF PUBLIC WORKS

SIDEWALKS

Scale:	Issued:
1"=2'	Aug. 2006

Drawing No: C-4

Sheet No: 1 OF 1

Revisions					
Description	Approved	Date	Description	Approved	Date
ADD NOTE 6	REM	NOV 07			
MODIFY NOTE 1, ADD NOTE 7	GDM	NOV 08			

NOTES:

1. ALL CURB RAMPS FOR NEW CONSTRUCTION, RETROFIT, AND REPLACEMENT SHALL CONFORM TO STATE STANDARD 90-1.01, MINOR (520 LBS CEMENTITIOUS MATERIAL PER CUBIC YARD [5-1/2 SACK]). CONCRETE CURING SHALL BE BY PIGMENTED CURING COMPOUND METHOD USING WHITE PIGMENT TYPE. CONTACT THE DEPARTMENT FOR THE LATEST ADOPTED STANDARD.
2. NEW SIDEWALKS AND PATHS SHALL BE PROVIDED WITH CURB RAMPS AT ALL INTERSECTIONS.
3. MID-BLOCK CURB RAMPS ARE DISCOURAGED AND SHALL REQUIRE PRIOR DEPARTMENT APPROVAL.
4. THE PROJECT ENGINEER SHALL DETAIL EACH CURB RAMP ON THE PLANS. MINIMUM DETAIL REQUIREMENTS SHALL INCLUDE DIMENSIONS, SLOPES, AND SPOT ELEVATIONS.
5. THE DEPARTMENT MAY GRANT EXCEPTIONS TO THESE STANDARDS ON AN INDIVIDUAL BASIS. THE DEPARTMENT ADA COORDINATOR SHALL REVIEW AND PROVIDE PRIOR APPROVAL OF ALL EXCEPTIONS.
6. MULTIPLE RAMPS SHALL BE REQUIRED AT ALL BULB-OUTS AND SHALL BE ALIGNED WITH APPROACH SIDEWALK, REFER TO STANDARD DRAWINGS A-6e & A-6d.
7. INTERNET LINKS TO CALTRANS CURB RAMP STANDARDS (A88A & A88B):
   http://www.dot.ca.gov/hq/esc/oe/project_plans/highway_plans/stdplans_US-customary-units_06/viewable_pdf/rspa88a.pdf
   http://www.dot.ca.gov/hq/esc/oe/project_plans/highway_plans/stdplans_US-customary-units_06/viewable_pdf/a88b.pdf

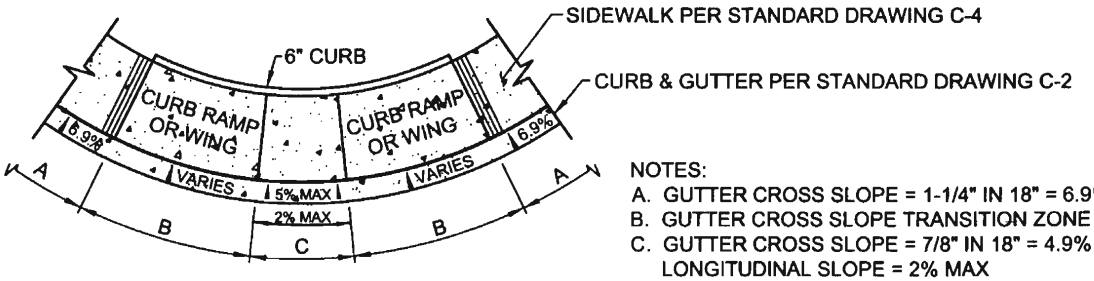

NOTES:

A. GUTTER CROSS SLOPE = 1-1/4" IN 18" = 6.9%
B. GUTTER CROSS SLOPE TRANSITION ZONE (VARIES)
C. GUTTER CROSS SLOPE = 7/8" IN 18" = 4.9% (5% MAX)
   LONGITUDINAL SLOPE = 2% MAX

TYPICAL GUTTER TRANSITION AT CURB RAMP

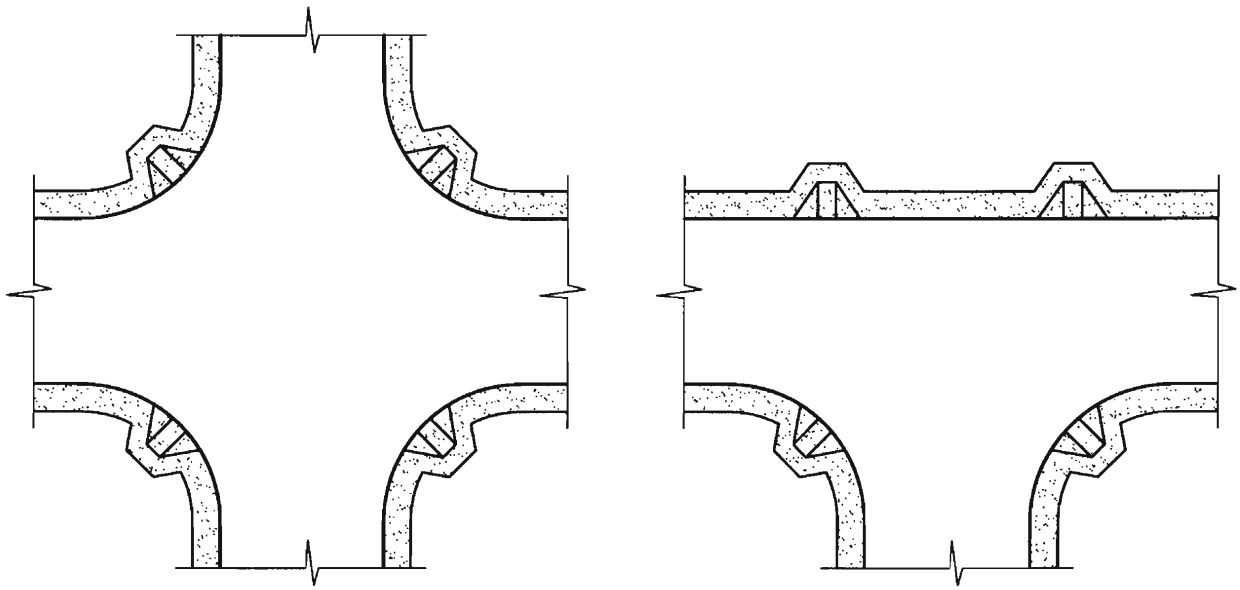

TYPICAL CURB RAMP PLACEMENT

SAN LUIS OBISPO COUNTY DEPARTMENT OF PUBLIC WORKS

CURB RAMPS

Scale: NTS	Issued: Aug. 2006
Drawing No: C-5	
Sheet No: 1 OF 1	

Revisions					
Description	Approved	Date	Description	Approved	Date
ADD SCORE LINE NOTE TO SECTION B-B	GDM	NOV 08			

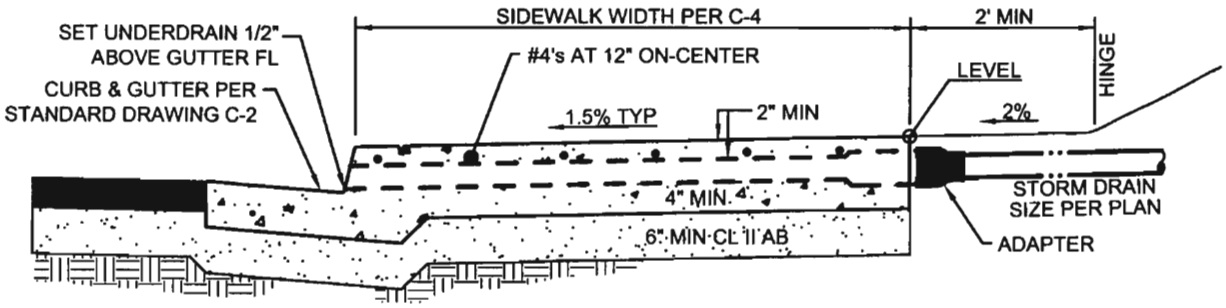

SECTION A-A

SHOWN AT 90°

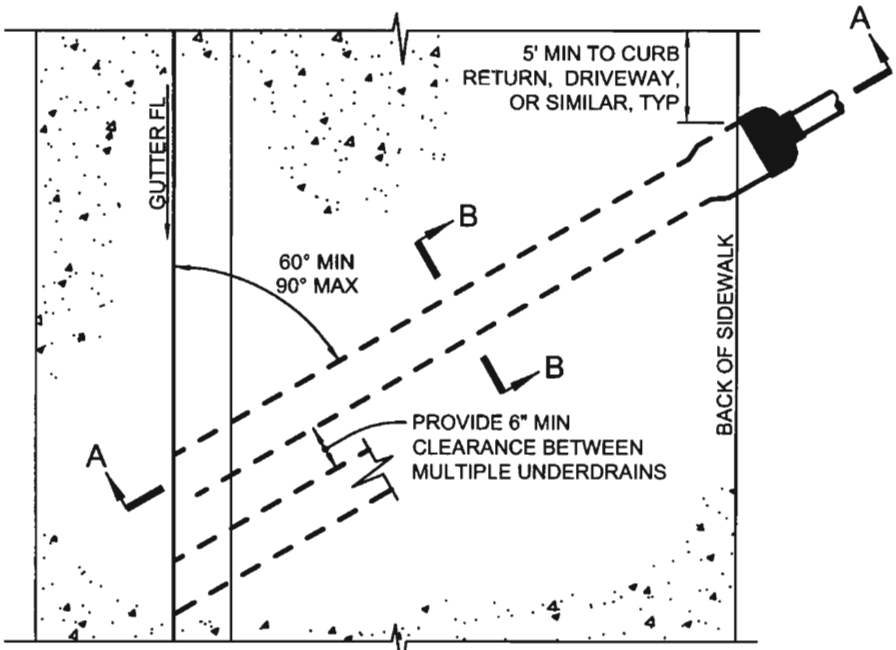

PLAN

NOTES:

1. THE UNDERDRAIN SHALL BE A 3-INCH TALL BY 5-INCH WIDE (MINIMUM) RECTANGULAR CAST IRON CONDUIT, ALHAMBRA A-470 OR DEPARTMENT APPROVED EQUAL. THE DESIGN WIDTH SHALL BE DETERMINED BY THE PROJECT ENGINEER AND SHOWN ON THE PLANS.
2. THE UNDERDRAIN SHALL BE SET FLUSH WITH THE CURB FACE AND PLACED 1/2" ABOVE THE GUTTER FLOWLINE.
3. THE SLOPE OF THE UNDERDRAIN SHALL MATCH THE SIDEWALK CROSS SLOPE.
4. UNDERDRAIN SHALL NOT BE LOCATED CLOSER THAN 5-FEET TO A DRIVEWAY OR CURB RETURN.
5. MULTIPLE DRAINS SHALL HAVE 6-INCH MINIMUM CLEARANCE WITH MAXIMUM OF 3 DRAINS PER 10-FEET OF SIDEWALK.
6. REVERSE SIDEWALK UNDERDRAINS SHALL BE SET 1-INCH BELOW THE DESIGN GUTTER FLOWLINE, AND 3-FOOT GUTTER TRANSITIONS SHALL BE PROVIDED EITHER SIDE OF THE UNDERDRAIN. THE DESIGN ENGINEER SHALL DETAIL REVERSE UNDERDRAINS ON THE PLANS.

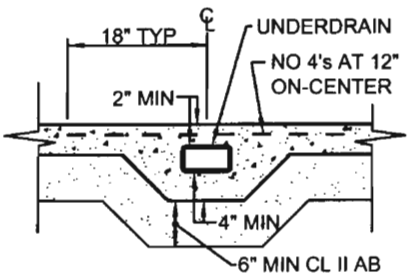

ADD SCORE LINE IN CONCRETE DIRECTLY ABOVE PIPE EDGES

SECTION B-B

SAN LUIS OBISPO COUNTY DEPARTMENT OF PUBLIC WORKS

SIDEWALK UNDERDRAIN

RESIDENTIAL

Scale:	Issued:
1"=2'	Aug. 2006
Drawing No:	D-4
Sheet No:	1 OF 1

Revisions					
Description	Approved	Date	Description	Approved	Date
NEW STANDARD	GDM	NOV 08			

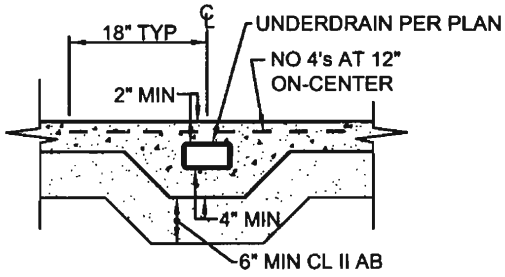

SECTION B-B

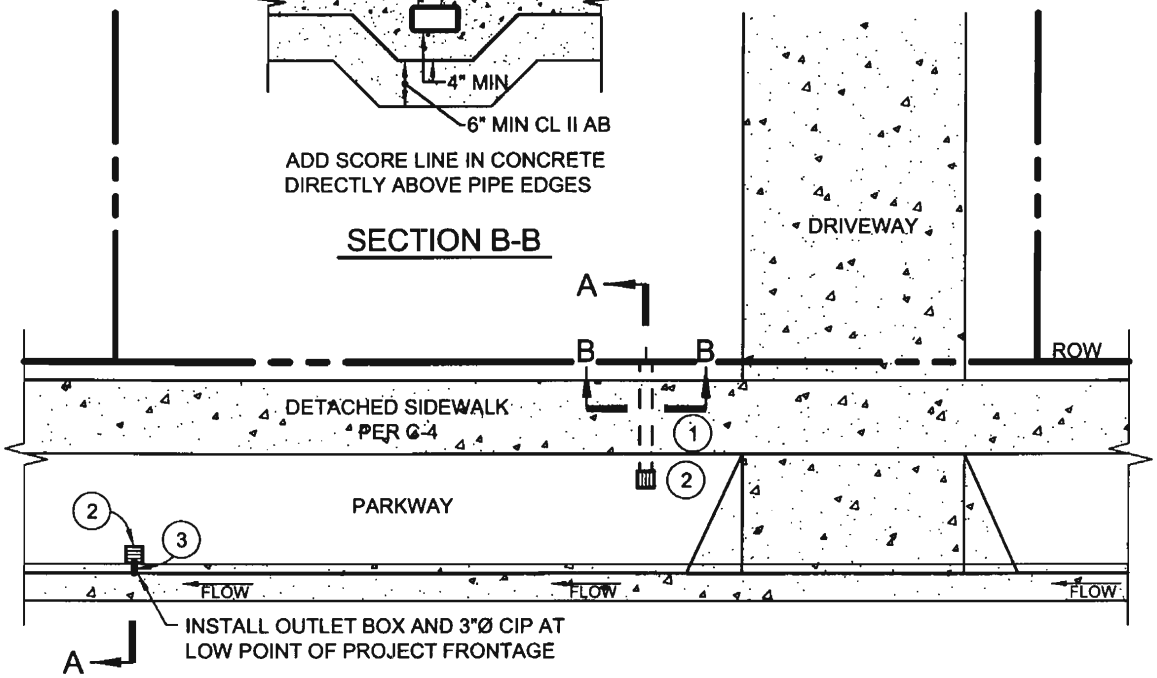

PLAN

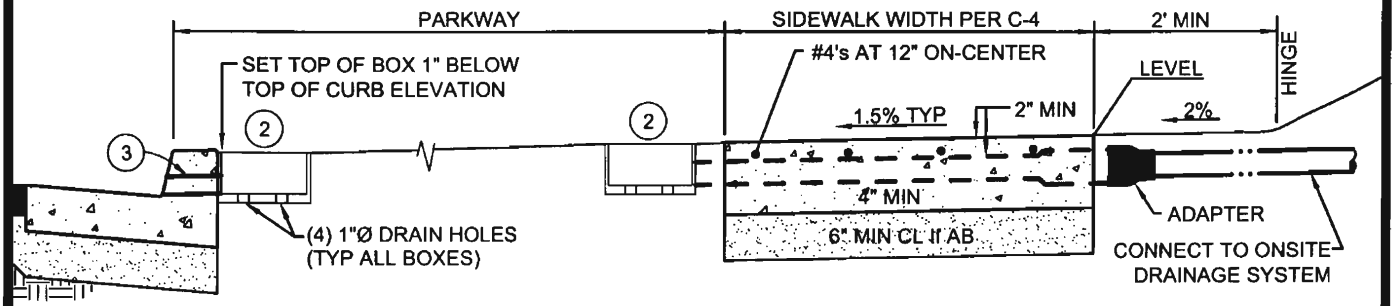

SECTION A-A
NTS

NOTES:
1. THE UNDERDRAIN SHALL BE A 3-INCH TALL BY 5-INCH WIDE (MINIMUM) RECTANGULAR CAST IRON CONDUIT, ALHAMBRA A-470 OR DEPARTMENT APPROVED EQUAL. THE DESIGN WIDTH SHALL BE DETERMINED BY THE PROJECT ENGINEER AND SHOWN ON THE PLANS. INSTALL UNDER SIDEWALK PER SECTION B-B, THIS SHEET.
2. PLASTIC STORM DRAIN BOX (NDS OR EQUAL). PROVIDE A MINIMUM OF 4 1"Ø DRAIN HOLES DRILLED THROUGH THE BOTTOM OF THE BOX.
3. INSTALL 3" CAST IRON PIPE. SET FLUSH WITH CURB FACE AND PLACE 1/2" ABOVE THE GUTTER FLOWLINE.

SAN LUIS OBISPO COUNTY DEPARTMENT OF PUBLIC WORKS

SIDEWALK UNDERDRAIN

RESIDENTIAL WITH PARKWAY (LID ALTERNATIVE)

Scale:	Issued:
1"=10'	Nov. 2008

Drawing No: D-4a

Sheet No: 1 OF 1

Revisions					
Description	Approved	Date	Description	Approved	Date
NOTE 1	REM	NOV 07			
NOTE 5	GDM	NOV 08			

STEP 1: SAWCUT PER NOTE 1 AND REMOVE MATERIAL TO REQUIRED DEPTH.

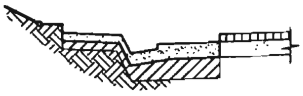

STEP 2: CONSTRUCT NEW SUBGRADE & BASE PER DEPARTMENT APPROVED SECTION.

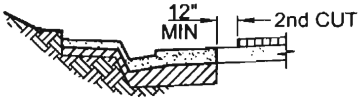

STEP 3: SAWCUT PER NOTE 1 TO REMOVE AN ADDITIONAL 12" MIN OF ASPHALT SURFACE

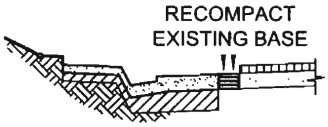

STEP 4: RECOMPACT EXISTING BASE SECTION TO 95% RELATIVE COMPACTION.

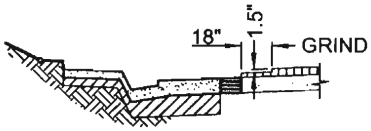

STEP 5: WHEN EXISTING AC IS ≧ 3.5" THICK, GRIND 18" WIDE x 1.5" DEEP OFF EXISTING ASPHALT SURFACE.

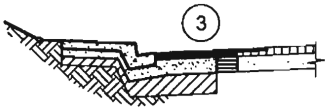

STEP 6: PAVE ROADWAY PER DEPARTMENT APPROVED SECTION (MAXIMUM OF 3" AC LIFT COMPACTED, MINIMUM 2 LIFTS).

WIDENING PROCEDURE

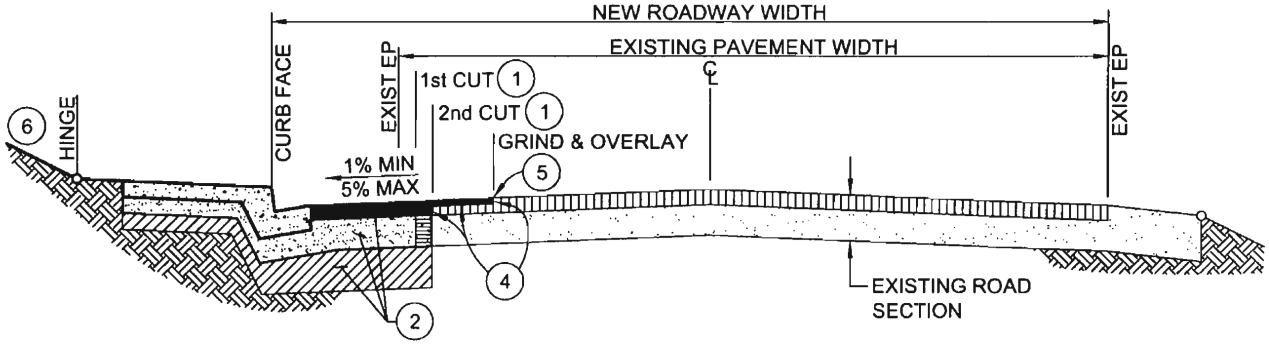

TYPICAL URBAN STREET WIDENING SECTION

NOTES:

1. SAWCUT TO REMOVE DAMAGED OR FAILED PAVEMENT SECTION ADJACENT TO THE EDGE OF PAVEMENT AS NECESSARY TO PROVIDE A CLEAN JOIN LINE. ALL SAWCUTS SHALL BE PERPENDICULAR OR PARALLEL TO CENTERLINE. WHERE SAWCUTS ARE PARALLEL THEY SHALL BE OUTSIDE THE NORMAL VEHICLE TIRE PATH WITHIN A TRAVEL LANE, AND SHALL NOT BE ALLOWED WITHIN DESIGNATED BICYCLE LANES. CUT EDGES SHALL BE VERTICAL WITH SQUARE CORNERS AND SHALL BE STRAIGHT AND NEAT IN APPEARANCE. ALL SAWCUTS SHALL BE TO MINIMUM SHOWN OR TO COMPETENT PAVEMENT SECTION.
2. THE STRUCTURAL ROAD WIDENING SECTION SHALL BE DETERMINED AT THE TIME OF CONSTRUCTION BASED ON THE SUBGRADE R-VALUE AND THE TRAFFIC INDEX (TI) AS PROVIDED BY THE DEPARTMENT. IF THE EXISTING ROAD STRUCTURAL SECTION IS GREATER THAN THE DETERMINED ROAD STRUCTURAL SECTION, THEN THE EXISTING STRUCTURAL SECTION THICKNESS SHALL BE MATCHED. TYPICAL ROAD WIDENING SECTION SHALL BE:
   - ASPHALT CONCRETE PER THE DESIGN STANDARDS TO 95% RELATIVE COMPACTION, OVER
   - CLASS II AGGREGATE BASE TO 95% RELATIVE COMPACTION, OVER
   - 12" MINIMUM SUBGRADE TO 95% RELATIVE COMPACTION
3. NEW PAVEMENT SHALL BE PLACED IN LIFTS NOT EXCEEDING 3-INCHES (COMPACTED), WITH A MINIMUM LIFT NOT LESS THAN 1.5-INCHES.
4. A TACK COAT SHALL BE APPLIED TO ALL HORIZONTAL AND VERTICAL CONFORM SURFACES PRIOR TO PAVING.
5. AFTER PAVING, APPLY SS1H OIL (OR APPROVED EQUAL) TO ALL SURFACE SEAMS OF ASPHALT CONCRETE.
6. CUT AND FILL SLOPES BEYOND ROADWAY HINGE POINTS SHALL NOT EXCEED 2 HORIZONTAL:1 VERTICAL (OR 3h:1v IN NATIVE SAND) WITHOUT PRIOR APPROVAL BY THE DEPARTMENT.

SAN LUIS OBISPO COUNTY DEPARTMENT OF PUBLIC WORKS

URBAN STREET WIDENING

EXISTING AC PAVEMENT 3.5" THICK OR GREATER

Scale:	Issued:
NTS	Aug. 2006

Drawing No: R-2a

Sheet No: 1 OF 1

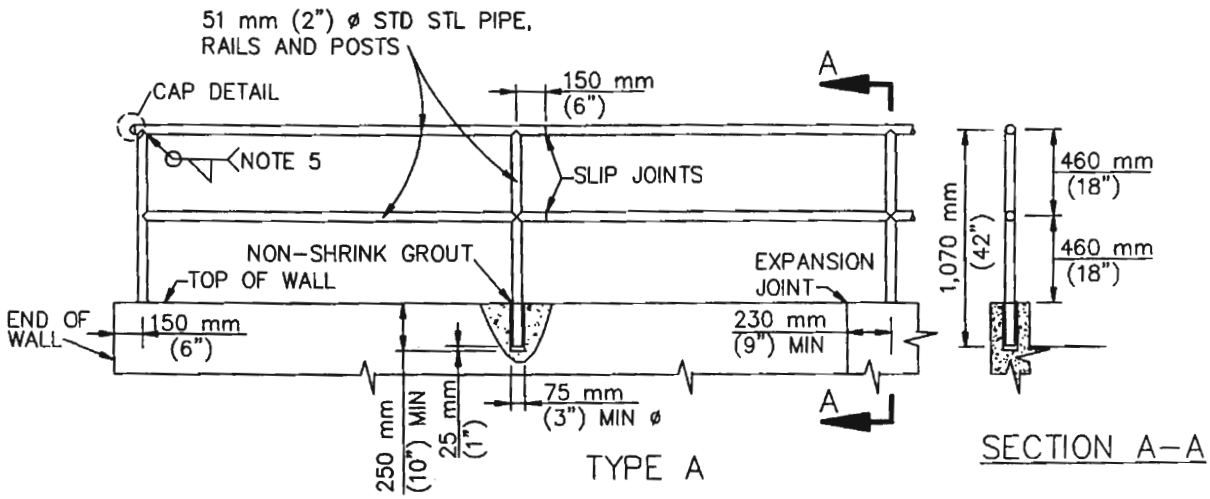

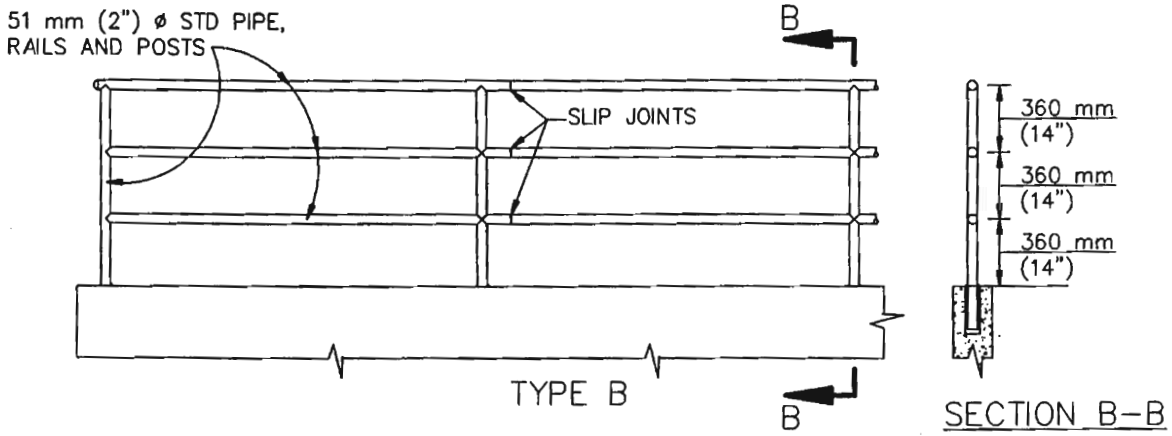

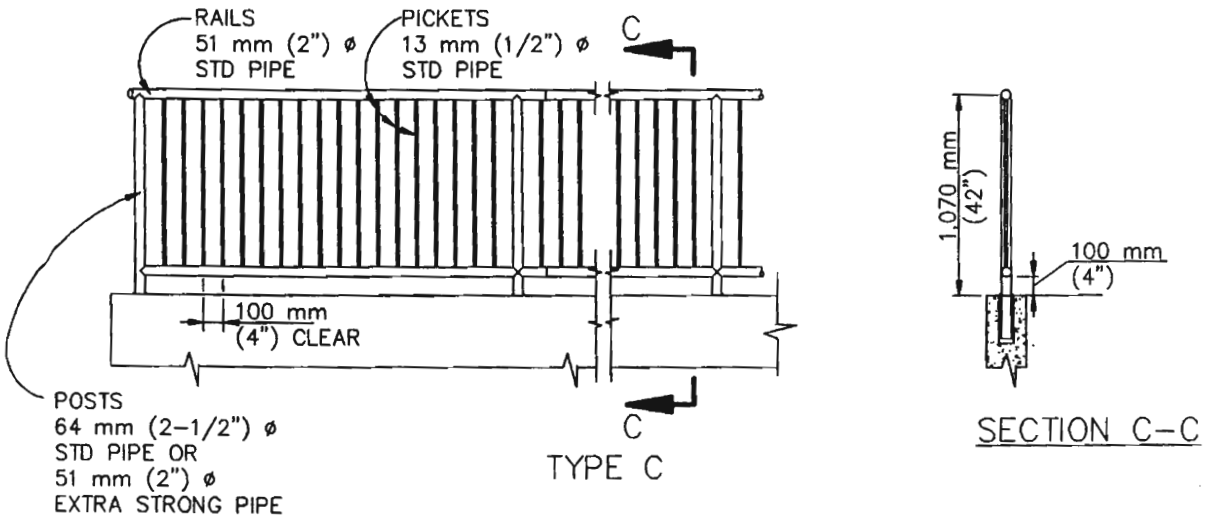

ELEVATION

STANDARD PLANS FOR PUBLIC WORKS CONSTRUCTION

PROMULGATED BY THE
PUBLIC WORKS STANDARDS INC.
GREENBOOK COMMITTEE
1993
REV. 1996, 2005

METAL HAND RAILINGS

USE WITH STANDARD SPECIFICATIONS FOR PUBLIC WORKS CONSTRUCTION

STANDARD PLAN
METRIC
606-2
SHEET 1 OF 3

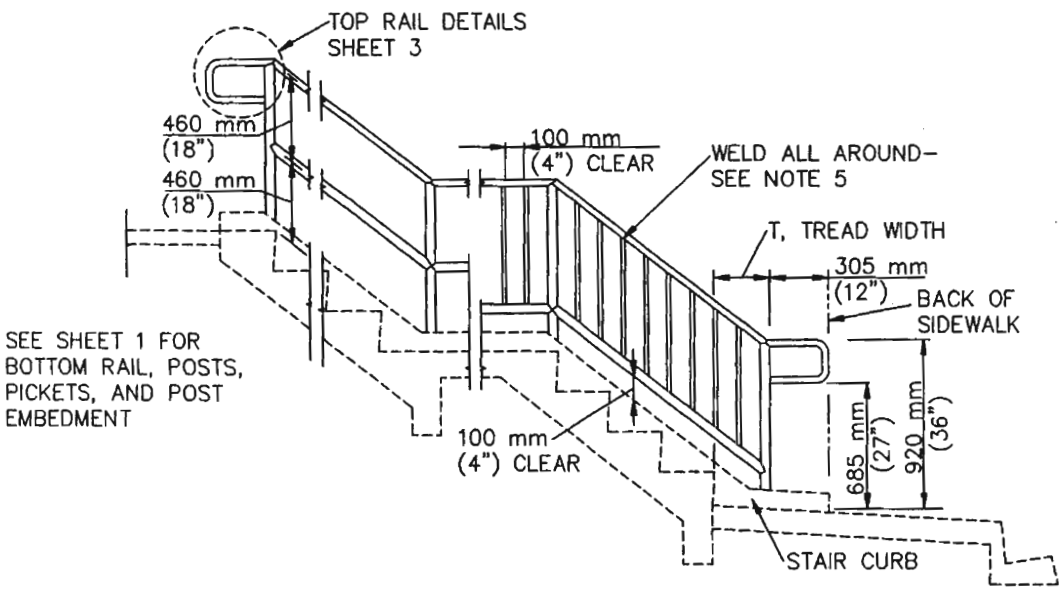

TYPE A TYPE C

HANDRAIL INSTALLATION ON STAIRWAYS

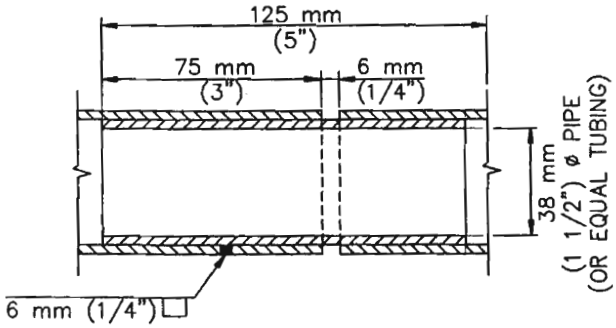

SLIP JOINT DETAIL

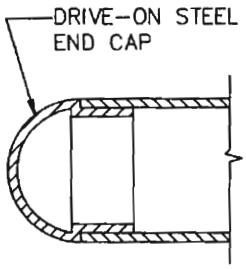

CAP DETAIL FOR RAIL END

NOTES:

1. USE TYPE C WHERE ADJACENT GRADE IS MORE THAN 760 mm (2'–6") BELOW LANDING OR SIDEWALK FINISHED SURFACE.
2. RAILS, POSTS, AND PICKETS SHALL BE GALVANIZED STEEL PIPE.
3. PROVIDE SLIP JOINTS AT STAIRWAY EXPANSION JOINTS, 7.3 m (24') MAXIMUM.
4. MAXIMUM SPACING OF POSTS SHALL BE 2.440 m (8'–0") ON STRAIGHT ALIGNMENTS, AND 1.830 m (6'–0") ON CURVED ALIGNMENTS WITH LESS THAN 9.1 m (30') RADIUS. MAKE SPACING UNIFORM BETWEEN CHANGES IN ALIGNMENT.
5. WELDS SHALL BE SLOT OR FILLET WELDS EQUAL TO THICKNESS OF PIPE. WELD ALL JOINTS ALL AROUND.

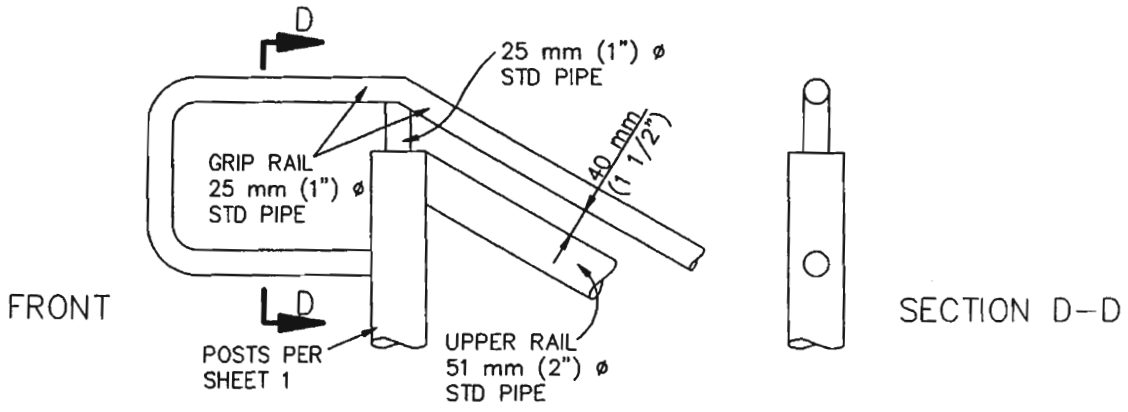

TOP RAIL TYPE 1

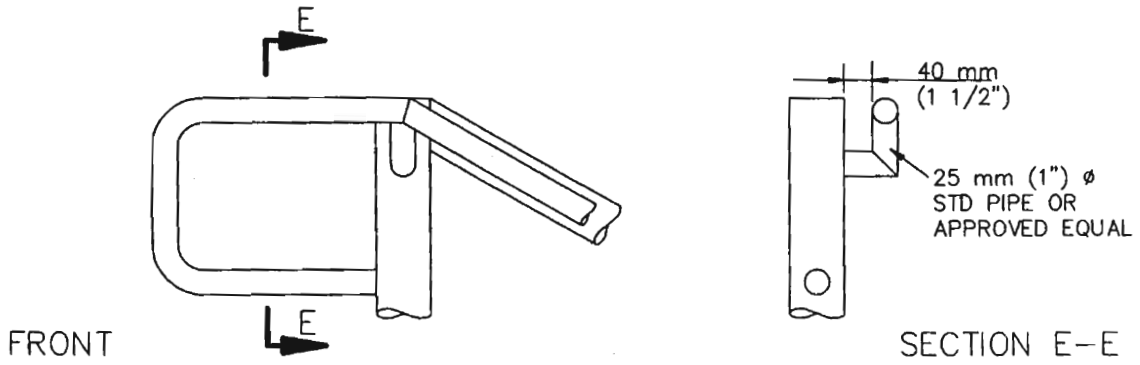

TOP RAIL TYPE 2

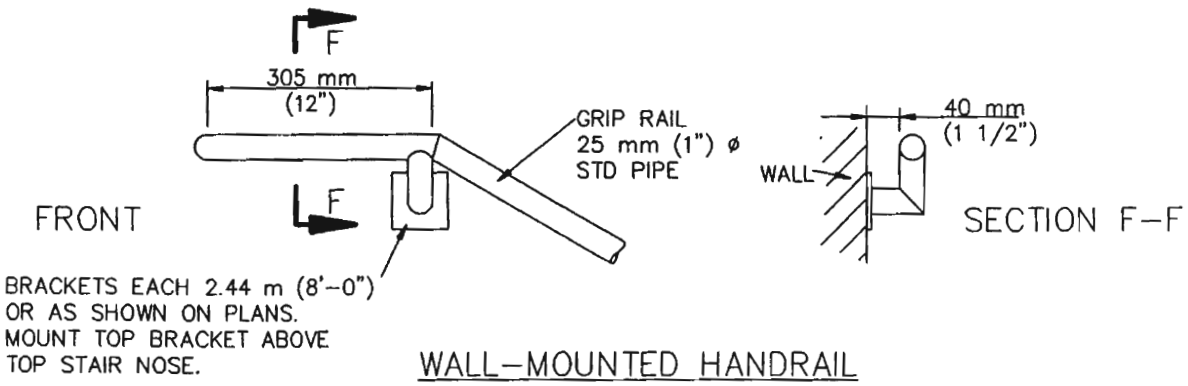

WALL–MOUNTED HANDRAIL

STANDARD PLANS FOR PUBLIC WORKS CONSTRUCTION	STANDARD PLAN METRIC
METAL HAND RAILINGS	**606–2**
	SHEET 3 OF 3

ATTACHMENT F

PROJECT PLANS