WATER DISTRIBUTION SYSTEM UPGRADES

COUNTY SERVICE AREA 10A

CAYUCOS, CA

CONTRACT NO. 300383

TABLE OF CONTENTS

Advertisement for Bids 00100

Signatures and Stamps 00110

Instructions to Bidders 00200

Wage Requirements 00300

Bid Form 00410

Non Collusion Affidavit 00420

Bid Bond 00430

Compliance Statement 00440

Certification Regarding Debarment 00450

Certification for Contracts, Grants and Loans 00460

Workers' Compensation Certification 00470

List of Subcontractors 00480

Additional Insured Endorsement 00485

Agreement 00500

Notice of Award 00510

Notice to Proceed 00550

Performance Bond 00610

Payment Bond 00615

Certificate of Substantial Completion 00625

General Conditions 00700

Project Sign 00810

Certificate of Owner's Attorney 00815

Payment Request Form 00820

Change Order Form 00830

Appendix A - Specifications

Section 1. General Requirements

Section 2. Technical Specifications

Section 3. Environmental Permit Summary Form

Section 4. Amendments to Caltrans Standard Specifications

Section 5. Construction Staking Guidelines

Appendix B - Drawings

Standard Plans

Drawings

ADVERTISEMENT FOR BIDS

County of San Luis Obispo
Department of Public Works and Transportation
1050 Monterey Street
Room 207, County Government Center
San Luis Obispo, CA 93408

Separate sealed Bids for the construction of the

WATER SYSTEM SYSTEM UPGRADES
COUNTY SERVICE AREA 10A
CAYUCOS, CA
CONTRACT NO. 300383

The work involves upsizing the existing water distribution system in the County of San Luis Obispo's Community Service Area 10A, along Richard Avenue, Stuart Avenue, and Shearer Avenue in Cayucos, California. The work consists of constructing approximately 3,666 linear feet of 8-inch potable water pipeline, reconnection of service laterals, replacement and/or reconnection of fire hydrants, installation of gate valves, water pollution control, traffic control, reconstruction of pavement, and such other items that are described in the Specifications and as shown on the Drawings and/or required for a complete working system.Bids will be received by the County of San Luis Obispo at the at the office of the Clerk of the Board of Supervisors of the County of San Luis Obispo at 1055 Monterey Street, Room D-120, San Luis Obispo, CA 93408, until 3:00 p.m. (Local Time) _____ 2013, and then at said office publicly opened and read aloud.

The Bidding Documents may be examined at the following locations:

> Office of the Clerk of the Board of Supervisors of the County of San Luis Obispo at 1055 Monterey Street, Room D-120, San Luis Obispo, CA 93408
>
> Department of Public Works and Transportation, at 1050 Monterey Street, Room 207, County Government Center, San Luis Obispo, CA 93408 (hereafter, also the "Public Works Department" or "Department")

Copies of the Bidding Documents may be obtained at the County of San Luis Obispo Department of Public Works and Transportation located at 1050 Monterey Street, Room 207, County Government Center, San Luis Obispo, CA 93408 upon payment of $25.00 for each set (non-refundable).

Copies of full size Drawing may be purchased separately from:

> ASAP Reprographics
> 3121 South Higuera Street
> San Luis Obispo, CA 93401.
> (805) 543-3144

Questions concerning these documents should be directed to:

> http://www.slocounty.ca.gov/PW/Design_Division/Projects_Out_To_Bid.htm

Bidders are notified that financing for this Project is provided pursuant to the Consolidated Farm and Rural Development Act (7 U.S.C. Section 1921 et seq.) and that as allowed in Public Contract Code Section 22300, this Contract does not provide for substitution of securities for any monies withheld by the Owner to ensure performance under this Contract. Bidders are further notified that this Contract does not permit retainage to be placed in escrow nor to be invested for the benefit of the Contractor.

Prospective Bidders shall be licensed Contractors in the State of California and shall be skilled and regularly engaged in the general class or type of work called for under the Contract. Each Bidder shall have a Class A California Contractor's license.

Each Bid shall be made in accordance with the Bidding Documents, and no Bid will be received unless it is made on Bid forms included in the Bidding Documents. Each Bid must be accompanied by cash, certified check, or cashier's check or Bidder's Bond made payable to the County of San Luis Obispo for an amount equal to at least ten percent (10%) of the total amount of the Bid.

While the General Conditions herein (Section 00700) are similar to the EJCDC C-700 Standard General Conditions (2007 Edition) in many respects, the General Conditions also differ from said EJCDC document in many respects in order to conform with Federal, State, and County requirements. A copy of the differences between the General Conditions herein and said EJCDC document is available upon request.

Owner reserves the right to reject any or all Bids, and to waive discrepancies, irregularities, informalities or any other errors in the Bids or bidding, if to do so seems to best serve the public interest, so long as the error does not constitute a material error.

Bidders are notified of the requirements and submittal deadlines for written requests for approval of substitute materials or equipment identified in Paragraph 11.01 of Section 00200, Instructions to Bidders, and Paragraph 6.05 of Section 00700, Standard General Conditions.By order of the Board of Supervisors of the County of San Luis Obispo

(Date)	Deputy Clerk of the Board of Supervisors

SECTION 00110

SIGNATURES AND STAMPS

The Contract Documents for Water System Upgrades, CSA 10A Cayucos Project, Contract No 300383, presented herein have been prepared by or under the direction of the following registered engineers:

PREPARED BY:

PROJECT ENGINEER — DATE 4/10/13

REGISTERED PROFESSIONAL ENGINEER JEFF B. WERST C 47971 EXP 12-31-13 CIVIL STATE OF CALIFORNIA

DESIGN ENGINEER — DATE 4/10/13

REGISTERED PROFESSIONAL ENGINEER JEFF B. WERST C 47971 EXP 12-31-13 CIVIL STATE OF CALIFORNIA

UTILITIES DIVISION MANAGER — DATE 4/10/2013

RECOMMENDED FOR APPROVAL AND ADVERSTING BY:

Dave Flynn

DEPUTY DIRECTOR OF PUBLIC WORKS — DATE 4/10/13

APPROVED BY:

Dave Flynn for PAD

PUBLIC WORKS DIRECTOR — DATE 4/10/13

END OF SECTION

SECTION 00200

INSTRUCTIONS TO BIDDERS

ARTICLE 1 - INTRODUCTION

1.01 Terms used in these Instructions to Bidders have the meanings indicated in the General Conditions. While the General Conditions herein (Section 00700) are similar to the EJCDC C-700 Standard General Conditions (2007 Edition) in many respects, the General Conditions also differ from said EJCDC document in many respects in order to conform with Federal, State, and County requirements. A copy of the differences between the General Conditions herein and said EJCDC document is available upon request.

ARTICLE 2 - COPIES OF BIDDING DOCUMENTS

2.01 Complete sets of the Bidding Documents in the number and for the purchase price, stated in the Advertisement for Bids may be obtained from the Public Works Department.

2.02 Complete sets of Bidding Documents shall be used in preparing Bids; neither Owner nor Designer assumes any responsibility for errors or misinterpretations resulting from the use of incomplete sets of Bidding Documents.

2.03 Owner and Designer, in making copies of Bidding Documents available on the above terms, do so only for the purpose of obtaining Bids for the Work and do not confer a license or grant for any other use.

2.04 Bidding Documents are available for download from the following website:

http://www.slocounty.ca.gov/PW/Design_Division/PROJECTs_Out_To_BID.htm

ARTICLE 3 - BLANK

ARTICLE 4 - EXAMINATION OF BIDDING DOCUMENTS, OTHER RELATED DATA, AND SITE

4.01 Subsurface and Physical Conditions

A. The General Conditions identify:

1. Those reports of explorations and tests of subsurface conditions at or contiguous to the Site, if any, that Designer has used in preparing the Bidding Documents.

2. Those drawings of physical conditions in or relating to existing surface and subsurface structures at or contiguous to the Site (except Underground Facilities), if any, that Designer has used in preparing the Bidding Documents.

B. Copies of reports and drawings referenced in Paragraph 4.01.A, if any, will be made available by Owner to any Bidder for download from the following website:

http://www.slocounty.ca.gov/PW/Design_Division/Projects_Out_To_Bid.htm

Those reports and drawings are not part of the Contract Documents, but the "technical data" contained therein upon which Bidder is entitled to rely is described in Paragraph 4.02 of the General Conditions. Bidder is responsible for any interpretation or conclusion Bidder draws from any "technical data" or any other data, interpretations, opinions or information contained in such reports or shown or indicated in such drawings.

4.02 Underground Facilities

A. Information and data shown or indicated in the Bidding Documents with respect to existing Underground Facilities at or contiguous to the Site is based upon information and data furnished to Owner and Designer by owners of such Underground Facilities, including Owner, or others, unless otherwise specified in the Drawings and Specifications.

4.03 Hazardous Environmental Condition

A. The General Conditions identify those reports and drawings relating to a Hazardous Environmental Condition identified at the Site, if any, that Designer has used in preparing the Bidding Documents.

B. Copies of reports and drawings referenced in Paragraph 4.03.A, if any, will be made available by Owner to any Bidder. for download on the following website:

http://www.slocounty.ca.gov/PW/Design_Division/Projects_Out_To_Bid.htm.

Those reports and drawings are not part of the Contract Documents, but the "technical data" contained therein upon which Bidder is entitled to rely is described in Paragraph 4.06 of the General Conditions. Bidder is responsible for any interpretation or conclusion Bidder draws from any "technical data" or any other data, interpretations, opinions, or information contained in such reports or shown or indicated in such drawings.

4.04 Provisions concerning responsibilities for the adequacy of data furnished to prospective Bidders with respect to subsurface conditions, other physical conditions and Underground Facilities, and possible changes in the Bidding Documents due to differing or unanticipated conditions appear in Paragraphs 4.02, 4.03, and 4.04 of the General Conditions. Provisions concerning responsibilities for the adequacy of data furnished to prospective Bidders with respect to a Hazardous Environmental Condition at the Site, if any, and possible changes in the Contract Documents due to any Hazardous Environmental Condition uncovered or revealed at the Site which was not shown or indicated in the Drawings or Specifications or identified in the Contract Documents to be within the scope of the Work appear in Paragraph 4.06 of the General Conditions.

4.05 On request, Owner will provide Bidder access to the Site to conduct such examinations, investigations, explorations, tests, and studies as Bidder deems necessary for submission of a Bid. Bidder shall fill all holes and clean up and restore the Site to its former condition upon completion of such explorations, investigations, tests, and studies. Bidder shall comply with all applicable Laws and Regulations relative to locating of excavation and utility.

4.06 Additional Owner Provided Information

A. Reference is made to the General Conditions for the identification of the general nature of other work, if any, that is to be performed at the Site by Owner or others (such as utilities and other prime contractors) that relates to the Work contemplated by these Bidding Documents. On request, Owner will provide to each Bidder for examination access to or copies of available documents (other than portions thereof related to price) for such other work.

B. Paragraph 6.13.C of the General Conditions states that if an Owner Safety program exists it will be noted in the Specifications.

4.07 It is the responsibility of each Bidder before submitting a Bid to:

A. Examine and carefully study the Bidding Documents, the other related data identified in the Bidding Documents, and any Addenda;

B. Visit the Site and become familiar with and satisfy Bidder as to the general, local, and Site conditions that may affect cost, progress, and performance of the Work;

C. Become familiar with and satisfy Bidder as to all Federal, State, and local Laws and Regulations that may affect cost, progress, and performance of the Work;

D. Carefully study all: (1) reports of explorations and tests of subsurface conditions at or contiguous to the Site, if any, and all drawings of physical conditions relating to existing surface or subsurface structures at the Site (except Underground Facilities), if any, that have been identified in Paragraph 4.02 of the General Conditions as containing reliable "technical data," and (2) reports and drawings of Hazardous Environmental Conditions, if any, at the Site that have been identified in Paragraph 4.06 of the General Conditions as containing reliable "technical data.";

E. Obtain and carefully study (or accept consequences of not doing so) all additional or supplementary examinations, investigations, explorations, tests, studies, and data concerning conditions (surface, subsurface, and Underground Facilities) at or contiguous to the Site which may affect cost, progress, or performance of the Work or which relate to any aspect of the means, methods, techniques, sequences, and procedures of construction to be employed by Bidder, including applying any specific means, methods, techniques, sequences, and procedures of construction expressly required by the Bidding Documents, and safety precautions and programs incident thereto;

F. Agree at the time of submitting its Bid that no further examinations, investigations, explorations, tests, studies, or data are necessary for the determination of its Bid for performance of the Work at the price(s) bid and within the times and in accordance with the other terms and conditions of the Bidding Documents;

G. Become aware of the general nature of the work to be performed by Owner and others at the Site that relates to the Work as indicated in the Bidding Documents;

H. Correlate the information known to Bidder, information and observations obtained from visits to the Site, reports and drawings identified in the Bidding Documents, and all additional examinations, investigations, explorations, tests, studies, and data with the Bidding Documents;

I. Promptly give Owner written notice of all conflicts, errors, ambiguities, or discrepancies that Bidder discovers in the Bidding Documents and confirm that the written resolution thereof by Owner is acceptable to Bidder; and

J. Determine that the Bidding Documents are generally sufficient to indicate and convey understanding of all terms and conditions for the performance of the Work.

4.08 The submission of a Bid will constitute an incontrovertible representation by Bidder that Bidder has complied with every requirement of this Article 4, that without exception the Bid is premised upon performing and furnishing the Work required by the Bidding Documents and applying any specific means, methods, techniques sequences, and procedures of construction that may be shown or indicated or expressly required by the Bidding Documents, that Bidder has given Owner written notice of all conflicts, errors, ambiguities, and discrepancies that Bidder has discovered in the Bidding Documents and the written resolutions thereof by Owner are acceptable to Bidder, and that the Bidding Documents are generally sufficient to indicate and convey understanding of all terms and conditions for performing and furnishing the Work.

ARTICLE 5 - PRE-BID CONFERENCE

5.01 A pre-Bid conference will not be held.

ARTICLE 6 - SITE AND OTHER AREAS

6.01 The Site is identified in the Bidding Documents. Easements for permanent structures or permanent changes in existing facilities are to be obtained and paid for by Owner unless otherwise provided in the Bidding Documents. Except for those areas identified in the Bidding Documents as temporary staging areas, all additional lands and access thereto required for temporary construction facilities, construction equipment, or storage of materials and equipment to be incorporated in the Work are to be obtained and paid for by Contractor.

ARTICLE 7 - INTERPRETATIONS AND ADDENDA

7.01 All questions about the meaning or intent of the Bidding Documents are to be submitted to Owner in writing. at the following website:

http://www.slocounty.ca.gov/PW/Design_Division/Projects_Out_To_Bid.htm.

Interpretations or clarifications considered necessary by Owner in response to such questions will be issued by Addenda faxed or emailed to all parties recorded by Owner as having received the Bidding Documents and made available on the following website:

http://www.slocounty.ca.gov/PW/Design_Division/Projects_Out_To_Bid.htm.

Questions received less than five days prior to the date for opening of Bids may not be answered. Only questions answered by Addenda will be binding. Oral and other interpretations or clarifications will be without legal effect.

7.02 Addenda may be issued to clarify, correct, or change the Bidding Documents as deemed advisable by Owner.

ARTICLE 8 - BID SECURITY

8.01 A Bid must be accompanied by Bid security made payable to Owner in an amount of 10 percent of Bidder's maximum Bid price and in the form of a certified check or bank money order or a Bid bond (Section 00430) issued by a surety meeting the requirements of Paragraphs 5.01 and 5.02 of the General Conditions.

8.02 The Bid security of the Successful Bidder will be retained until such Bidder has executed the Contract Documents, furnished the required Contract security and met the other conditions of the Notice of Award, whereupon the Bid security will be returned. If the Successful Bidder fails to execute and deliver the Contract Documents and furnish the required Contract security within 15 days after the Notice of Award, Owner may annul the Notice of Award and the Bid security of that Bidder will be forfeited. The Bid security of other Bidders will be retained by Owner until the award of the Contract to the Successful Bidder.

ARTICLE 9 - CONTRACT TIMES

9.01 The dates by which the Work is to be substantially completed and ready for final payment are set forth in the Agreement.

ARTICLE 10 - LIQUIDATED DAMAGES

10.01 Provisions for liquidated damages are set forth in the Agreement.

ARTICLE 11 - SUBSTITUTE AND "OR-EQUAL" ITEMS

11.01 The Contract, if awarded, will be on the basis of materials and equipment specified or described in the Bidding Documents, or "or-equal" materials and equipment as described in Paragraph 6.05 of the General Conditions, or those substitute materials and equipment approved by Owner and identified by Addendum. The materials and equipment described in the Bidding Documents establish a standard of required type, function and quality to be met by any proposed substitute or "or-equal" item. Request for clarification of materials and equipment considered "or-equal" prior to the Effective Date of Agreement must be received by the Owner at the office of the County Clerk, 1055 Monterey Street, D-120, San Luis Obispo, CA 93408, no later than 4:00 p.m. on _____, 2013. No item of material or equipment will be considered by Owner as a substitute unless written request for approval has been submitted by Bidder and has been received by Owner at the office of the County Clerk, 1055 Monterey Street, D-120, San Luis Obispo, CA 93408, no later than 4:00 p.m. on _____, 2013. Each such request shall conform to the requirements of Paragraph 6.05 of the General Conditions. The burden of proof of the merit of the proposed item is upon Bidder. Owner's decision of approval or disapproval of a proposed item will be final. If Owner approves any proposed substitute item, such approval

will be set forth in an Addendum issued to all prospective Bidders. Bidders shall not rely upon approvals made in any other manner.

ARTICLE 12 - BLANK

ARTICLE 13 - PREPARATION OF BID

13.01 The Bid Form is included with the Bidding Documents. Additional copies may be obtained from Owner.

13.02 All blanks on the Bid Form shall be completed in ink and the Bid signed in ink. Erasures or alterations shall be initialed in ink by the person signing the Bid Form. A Bid price shall be indicated for each Bid Item listed therein.

13.03 A Bid by a corporation shall be executed in the corporate name by the president or a vice-president or other corporate officer accompanied by evidence of authority to sign. The corporate seal shall be affixed and attested by the secretary or an assistant secretary. The corporate address and state of incorporation shall be provided on the Bid Form.

13.04 A Bid by a partnership shall be executed in the partnership name and signed by a partner (whose title must appear under the signature), accompanied by evidence of authority to sign. The official address of the partnership shall be provided on the Bid Form.

13.05 A Bid by a limited liability company shall be executed in the name of the firm by a member and accompanied by evidence of authority to sign. The state of formation of the firm and the official address of the firm shall be shown.

13.06 A Bid by an individual shall show the Bidder's name and business address.

13.07 A Bid by a joint venture shall be executed by each joint venturer in the manner indicated on the Bid Form. The official address of the joint venture must be provided on the Bid Form.

13.08 All names shall be printed in ink below the signatures.

13.09 The Bid shall contain an acknowledgment of receipt of all Addenda, the numbers and dates of which shall be filled in on the Bid Form.

13.10 The postal and email addresses and telephone number for communications regarding the Bid shall be shown.

13.11 The Bid shall contain evidence of Bidder's authority and qualification to do business in the state or locality where the Project is located or Bidder shall covenant in writing to obtain such qualification prior to award of the Contract and attach such covenant to the Bid Form. Bidder's state contractor license number shall also be shown on the Bid Form.

ARTICLE 14 - BASIS OF BID; COMPARISON OF BIDS

14.01 *Unit Price*

A. Bidders shall submit a Bid for each unit basis item of work a unit price and a total for the item, or for each lump sum item a total for the item for each item of Work listed in the Bid schedule.

B. The total of all bid prices will be the sum of the products of the estimated quantity of each item and the corresponding unit price. The final quantities and Contract Price will be determined in accordance with Paragraph 11.03 of the General Conditions.

C. Discrepancies between the multiplication of units of Work and unit prices will be resolved in favor of the unit prices. Discrepancies between the indicated sum of any column of figures and the correct sum thereof will be resolved in favor of the correct sum. Discrepancies between words and figures will be resolved in favor of the words.

14.02 Allowances

A. For cash allowances the Bid price shall include such amounts as the Bidder deems proper for Contractor's overhead, costs, profit, and other expenses on account of cash allowances, if any, named in the Contract Documents, in accordance with Paragraph 11.02.B of the General Conditions.

ARTICLE 15 - SUBMITTAL OF BID

15.01 With each copy of the Bidding Documents, a Bidder is furnished one separate unbound copy of the Bid Form, and the Bid bond form. The unbound copy of the Bid Form is to be completed and submitted with all of the attachments outlined in Article 7 of the Bid Form.

15.02 A Bid shall be submitted no later than the date and time prescribed and at the place indicated in the Advertisement for Bids and shall be enclosed in an opaque sealed envelope plainly marked with the Project title (and, if applicable, the designated portion of the Project for which the Bid is submitted), the name and address of Bidder, and shall be accompanied by the Bid security and other required documents. If a Bid is sent by mail or other delivery system, the sealed envelope containing the Bid shall be enclosed in a separate envelope plainly marked on the outside with the notation "BID ENCLOSED." When using the mail or other delivery system, the Bidder is totally responsible for the mail or other delivery system delivering the Bid at the place and prior to the time indicated in the Advertisement for Bid. A mailed Bid shall be addressed to Owner at the address in Article 1.01 of the Bid Form.

ARTICLE 16 - MODIFICATION AND WITHDRAWAL OF BID

16.01 A Bid may be modified or withdrawn prior to the date and time for opening of bids by an appropriate document duly executed in the manner that a Bid must be executed and delivered to the place where Bids are to be submitted prior to the date and time for the opening of Bids.

16.02 If within 5 days after Bids are opened, any Bidder files a duly signed written notice with Owner and promptly thereafter demonstrates to the reasonable satisfaction of Owner that there was a material and substantial mistake in the preparation of its Bid, that Bidder may withdraw its Bid, and the Bid security will be returned. Thereafter, if the Work is rebid or negotiated, that Bidder will be disqualified from further bidding on the Work. This provision to withdraw a Bid without forfeiting the Bid security does not apply to Bidder's errors in judgment in preparing the Bid, or to carelessness in inspecting the site of Work or in reading the Drawings and Specifications.

ARTICLE 17 - OPENING OF BIDS

17.01 Bids will be opened at the time and place indicated in the Advertisement for Bids and, unless obviously non-responsive, read aloud publicly. An abstract of the amounts of the Bids and alternates, if any, will be made available to Bidders after the opening of Bids.

ARTICLE 18 - BIDS TO REMAIN SUBJECT TO ACCEPTANCE

18.01 All Bids will remain subject to acceptance for the period of time stated in the Bid Form, but Owner may, at its sole discretion, release any Bid and return the Bid security prior to the end of this period.

ARTICLE 19 – EVALUATION OF BIDS AND AWARD OF CONTRACT

19.01 Owner reserves the right to reject any or all Bids, including without limitation, nonconforming, nonresponsive, unbalanced, or conditional Bids. Owner further reserves the right to reject the Bid of any Bidder whom it finds, after reasonable inquiry and evaluation, to be non-responsible. Owner also reserves the right to reject any or all bids, and to waive discrepancies, irregularities, informalities, or any other error in the bids or bidding, if to do so seems to best serve the public interest.

19.02 More than one Bid for the same Work from an individual or entity under the same or different names will not be considered. Reasonable grounds for believing that any Bidder has an interest in more than one Bid for the Work may be cause for disqualification of that Bidder and the rejection of all Bids in which that Bidder has an interest.

19.03 In evaluating Bids, Owner will consider whether or not the Bids comply with the prescribed requirements, and such alternates, unit prices and other data, as may be requested in the Bid Form or prior to the Notice of Award.

19.04 Owner may conduct such investigations as Owner deems necessary to establish the responsibility, and financial ability of Bidders, proposed Subcontractors, Suppliers, individuals, or entities to perform the Work in accordance with the Contract Documents.

19.06 If the Contract is to be awarded, Owner will award the Contract to the responsible Bidder whose Bid, conforming with all the material terms and conditions of the Instructions to Bidders, is the lowest price.

ARTICLE 20 - CONTRACT SECURITY AND INSURANCE

20.01 Article 5 of the General Conditions sets forth Owner's requirements as to performance and payment bonds and insurance. When the Successful Bidder delivers the executed Agreement to Owner, it shall be accompanied by properly executed bonds pursuant to the forms set forth in Section 00610 and 00615. Said bond forms are not Contract Documents, and are attached for reference purposes only.

When the Successful Bidder delivers the executed Agreement to Owner, it shall also be accompanied by certificates of insurance for all of the insurance which Contractor is required to purchase and maintain in accordance with Article 5 of the General Conditions.

ARTICLE 21 - SIGNING OF AGREEMENT

21.01 When Owner gives a Notice of Award to the Successful Bidder, it shall be accompanied by the required number of unsigned counterparts of the Agreement with the other Contract Documents which are identified in the Agreement as attached thereto. Within 15 days thereafter, Successful Bidder shall sign and deliver the required number of counterparts of the Agreement and attached documents to Owner. Within ten days thereafter, Owner shall deliver one fully signed counterpart to Successful Bidder with a complete set of the Drawings with appropriate identification.

21.02 This Contract is expected to be funded in part with funds provided by the United States Department of Agriculture, Rural Utilities Service (RUS). Refer to the General Conditions for Federal Requirements.

21.03 Concurrence by RUS in the Contract is required before the Contract is effective.

ARTICLE 22 - SALES AND USE TAXES

22.01 Contractor shall pay all California sales, use and other taxes as specified in Paragraph 6.10 of the General Conditions.

ARTICLE 23- WORKERS' COMPENSATION REQUIREMENTS

23.01 As required by Section 1860 of the California Labor Code and in accordance with the provisions of Section 3700 of the Labor Code, every Contractor will be required to secure the payment of workers' compensation to its employees.

23.02 In accordance with Section 1861 of the California Labor Code, the Contractor shall furnish the Owner with a statement as follows: "I am aware of the provisions of 3700 of the Labor Code which requires every employer to be insured against liability for worker's compensation or to undertake self-insurance in accordance with the provisions of that code, and I will comply with such provisions before commencing the performance of the work of this Contract."

ARTICLE 24 – SUBCONTRACTOR LISTING LAW

24.01 In accordance with Section 4104 of the California Public Contract Code, each Bidder, in his or her Bid, shall set forth the name and the location of the place of business of each

Subcontractor who will perform Work or labor or render service to the prime Contractor in or about the construction of the Work or improvement, or a Subcontractor licensed by the State of California who, under subcontract to the prime Contractor, specially fabricates and installs a portion of the work or improvement according to detailed drawings contained in the Drawings and Specifications, in an amount in excess of one-half of one percent of the prime Contractor's total Bid.

24.02 In accordance with Section 4107 of the California Public Contract Code, no Contractor whose Bid is accepted shall without consent of the Owner either: (a) substitute a person as a Subcontractor in place of the Subcontractor listed in the original Bid; or (b) permit a subcontract to be voluntarily assigned or transferred or allow it to be performed by anyone other than the original Subcontractor listed in the original Bid; or (c) sublet or subcontract any portion of the Work in excess of one-half of one percent of the prime Contractor's total Bid as to which his or her original Bid did not designate a Subcontractor.

24.03 Penalties for failure to comply with the foregoing sections of the California Public Contract Code are set forth in Sections 4106, 4110, and 4111 of the Public Contract Code. A prime Contractor violating this law violates his or her Contract and the awarding authority may exercise the option, in its own discretion, of (1) canceling his or her contract or (2) assessing the prime Contractor a penalty in an amount of not more than 10 percent of the amount of the subcontract involved, and this penalty shall be deposited in the fund out of which the prime Contract is awarded. In any proceedings under this section the prime Contractor shall be entitled to a public hearing and to 5 day's notice of the time and place thereof.

ARTICLE 25 – RURAL UTILITIES SERVICE REQUIREMENTS

25.01 Bidders are advised that funding for this Project is being provided in whole or in part by the United States Department of Agriculture, Rural Utilities Service which will review and approve the Contract award, Contract Agreement, partial and final payments, and Contract Change Orders.

25.02 Payment and retainage will comply with the Contract Agreement Paragraph 6.02 "Progress Payments; Retainage." Bidders are notified that this Contract does not permit retainage to be placed in escrow nor to be invested for the benefit of the Contractor.

25.03 Bidders are notified that financing for this Project is provided pursuant to the Consolidated Farm and Rural Development Act (7 U.S.C. Section 1921 et seq.), and that as allowed in Public Contract Code Section 22300, this Contract does not provide for substitution of securities for any monies withheld by the Owner to ensure performance under the Contract.

25.04 Bidders are notified of the requirement for affirmative action to ensure equal employment opportunity (Executive Order No. 11246) as set forth in the Equal Opportunity Requirements found in paragraph 18.10 of the General Conditions.

ARTICLE 26 – NOT USED

.

ARTICLE 27 – BID PROTESTS

Any Bid protest must be submitted in writing to the Department of Public Works, Room 207,County Government Center, 976 Osos Street, San Luis Obispo, CA 93408; Attention: Design Engineer before 5 p.m. of the 7th business day following Bid opening.

The initial protest document shall contain a complete statement of the basis for the protest and all evidence and documents supporting the protest available to the protesting party. The protest shall refer to the specific portion of the document which forms the basis for the protest. The protest shall include the name, address and telephone number of the person representing the protesting party. The party filing the protest shall concurrently transmit a copy of the initial protest document and any attached documentation to all other parties with a direct financial interest which may be adversely affected by the outcome of the protest. Such parties shall include all other Bidders who appear to have a reasonable prospect of receiving an award depending upon the outcome of the protest. The County Board of Supervisors will issue a decision on the protest.

The procedure and time limits set forth in this paragraph are mandatory and are the Bidder's sole and exclusive remedy in the event of Bid protest and failure to comply with these procedures shall constitute a waiver of any right to further pursue the Bid protest, including filing a Government Code Claim or legal proceedings.

END OF SECTION

SECTION 00300

WAGE REQUIREMENTS

Notice is hereby given that, pursuant to 1773 of the Labor Code of the State of California, the Owner has obtained from the Director of the Department of Industrial Relations the general prevailing rate of per diem wages and the general prevailing rate for holidays and overtime work for each craft, classification, or type of worker required to execute the Contract. A copy of said prevailing rate of per diem wages is on file in the principal office of the Owner, to which reference is hereby made for further particulars. Said prevailing rate of per diem wages will be made available to any interested party upon request, and a copy thereof shall be posted at each Project Site by the Contractor.

Statutory Penalty for Failure to Pay Minimum Wages: In accordance with 1775 of the California Labor Code, the Contractor shall as a penalty to the State of political subdivision on whose behalf a Contract is made or awarded, forfeit fifty dollars ($50.00) for each calendar day or portion thereof, for each worker paid less than the stipulated prevailing rate for any public work done under the Contract by the Contractor or by any Subcontractor under the Contractor.

Statutory Penalty for Unauthorized Overtime Work: In accordance with 1813 of the California Labor Code, the Contractor shall as a penalty to the State or political subdivision on whose behalf the Contract is made or awarded, forfeit twenty-five dollars ($25.00) for each worker employed in the execution of the Contract by the Contractor or by any Subcontractor for each calendar day during which said worker is required or permitted to work more than eight hours in any one calendar day and forty hours in any one calendar week in violation of 1810-1815 of the California Labor Code.

Apprenticeship Requirements: Contractor agrees to comply with 1777.5, 1777.6 and 1777.7 of the California Labor Code relating to the employment of apprentices. The responsibility for compliance with these provisions is fixed with the prime contractor for all apprenticeship occupations. Under these sections of the law, Contractors and Subcontractors must employ apprentices in apprenticeship occupations, where journeymen in the craft are employed on the public work, in a ratio of not less than one apprentice hour for each five journeymen hours (unless an exemption is granted in accordance with 1777.5) and Contractors and Subcontractors shall not discriminate among otherwise qualified employees as indentured apprentices on any public work solely on the ground of race, religious creed, color, national origin, ancestry, sex, or age, except as provided in 3077 of the Labor Code. Only apprentices, as defined in 3077, which provides that an apprentice must be at least 16 years of age, who are in training under apprenticeship standards and who have signed written apprentice agreements will be employed on public works in apprenticeship occupations.

Payroll Records: Contractor shall keep accurate payroll records on forms provided by the Division of Labor Standards Enforcement, or alternatively, the Contractor shall keep accurate payroll records containing the same information. Said information shall include, but not be limited to, a record of the name, address, social security number, work classification, straight time and overtime hours worked each day and week, and actual per diem wages paid to each journeyman, apprentice, or worker employed by the Contractor. Such record shall be made available for inspection at all reasonable hours, and a copy shall be made available to employee or his authorized representative, the Division of Labor Standards Enforcement, and the Division

of Apprenticeship Standards in compliance with California Labor Code, Section 1776. Upon written notice from the Owner or the Division of Labor Standards Enforcement, the Contractor shall, within ten (10) days, file with the Owner a certified copy of the payroll records. The Contractor shall cause an identical clause to be included in every subcontract for the Work.

END OF SECTION

SECTION 00410

BID FORM

WATER DISTRIBUTION SYSTEM UPGRADES

COUNTY SERVICE AREA 10A

CAYUCOS, CA

CONTRACT NO. 300383

ARTICLE 1- BID RECIPIENT

1.01 This Bid is submitted to: Office of the County Clerk
1055 Monterey Street, Room D-120
San Luis Obispo, CA 93408

1.02 The undersigned Bidder proposes and agrees, if this Bid is accepted, to enter into an Agreement with Owner in the form included in the Bidding Documents to perform all Work as specified or indicated in the Bidding Documents for the prices and within the times indicated in this Bid and in accordance with the other terms and conditions of the Bidding Documents.

ARTICLE 2- BIDDERS ACKNOWLEDGEMENTS

2.01 Bidder accepts all of the terms and conditions of the Instructions to Bidders, including without limitation those dealing with the disposition of Bid security. This Bid will remain subject to acceptance for 60 days after the Bid opening, or for such longer period of time that Bidder may agree to in writing upon request of Owner.

ARTICLE 3- BIDDER'S REPRESENTATIONS

3.01 In submitting this Bid, Bidder represents that:

A. Bidder has examined and carefully studied the Bidding Documents, the other related data identified in the Bidding Documents, and the following Addenda, receipt of which is hereby acknowledged.

Addendum No.	Addendum Date
_____	_____
_____	_____
_____	_____
_____	_____
_____	_____

B. Bidder has visited the Site and become familiar with and is satisfied as to the general, local and Site conditions that may affect cost, progress, and performance of the Work.

C. Bidder is familiar with and is satisfied as to all Federal, State and local Laws and Regulations that may affect cost, progress and performance of the Work.

D. Bidder has carefully studied all: (1) reports of explorations and tests of subsurface conditions at or contiguous to the Site, if any, and all drawings of physical conditions relating to existing surface or subsurface structures at the Site (except Underground Facilities), if any, that have been identified in Paragraph 4.02 of the General Conditions as containing reliable "technical data," and (2) reports and drawings of Hazardous Environmental Conditions, if any, at the Site that have been identified in Paragraph 4.06 of the General Conditions as containing reliable "technical data."

E. Bidder has considered the information known to Bidder; information commonly known to contractors doing business in the locality of the Site; information and observations obtained from visits to the Site; the Bidding Documents; and the Site-related reports and drawings identified in the Bidding Documents, with respect to the effect of such information, observations, and documents on (1) the cost, progress, and performance of the Work; (2) the means, methods, techniques, sequences, and procedures of construction to be employed by Bidder, including applying the specific means, methods, techniques, sequences, and procedures of construction expressly required by the Bidding Documents, if any, when applicable; and (3) Bidder's safety precautions and programs.

F. Based on the information and observations referred to in Paragraph 3.01.E above, Bidder does not consider that any further examinations, explorations, tests, studies, or data are necessary for the determination of this Bid for performance of the Work at the price(s) bid and within the times and in accordance with the other terms and conditions of the Bidding Documents.

G. Bidder is aware of the general nature of the Work to be performed by Owner and others at the Site, if any, that relates to the Work as indicated in the Bidding Documents.

H. Bidder has given Owner written notice of all conflicts, errors, ambiguities, or discrepancies that Bidder has discovered in the Bidding Documents, and the written resolution thereof by Owner is acceptable to Bidder.

I. The Bidding Documents are generally sufficient to indicate and convey understanding of all terms and conditions for the performance of the Work for which this Bid is submitted.

J. Bidder will submit written evidence of its authority to do business in the State or other jurisdiction where the Project is located not later than the date of its execution of the Agreement.

ARTICLE 4- BIDDER'S CERTIFICATION

4.01 Bidder further represents that:

A. This Bid is genuine and not made in the interest of or on behalf of any undisclosed individual or entity and is not submitted in conformity with any agreement or rules of any group, association, organization, or corporation;

B. Bidder has not directly or indirectly induced or solicited any other Bidder to submit a false or sham Bid;

C. Bidder has not solicited or induced any individual or entity to refrain from bidding; and

D. Bidder has not engaged in corrupt, fraudulent, collusive, or coercive practices in competing for the Contract. For the purposes of this Paragraph 4.01.D:

1. "corrupt practice" means the offering, giving, receiving, or soliciting of any thing of value likely to influence the action of a public official in the bidding process.

2. "fraudulent practice" means an intentional misrepresentation of facts made to (a) to influence the bidding process to the detriment of Owner, (b) to establish bid prices at artificial non-competitive levels, or (c) to deprive Owner of the benefits of free and open competition;

3. "collusive practice" means a scheme or arrangement between two or more Bidders, with or without the knowledge of Owner, a purpose of which is to establish bid prices at artificial, non-competitive levels; and

4. "coercive practice" means harming or threatening to harm, directly or indirectly, persons or their property to influence their participation in the bidding process or affect the execution of the Contract.

ARTICLE 5- BASIS OF BID

5.01 Bidder will complete the Work in accordance with the Contract Documents for the prices indicated in the Bid Schedule:

ITEM NO.	DESCRIPTION	ESTIMATED QUANTITY	UNIT	BID UNIT PRICE	BID PRICE
1	CONSTRUCTION AREA SIGNS	1	LUMP SUM	LUMP SUM	
2	TRAFFIC CONTROL SYSTEM	1	LUMP SUM	LUMP SUM	
3	SHEETING, SHORING, & BRACING	1	LUMP SUM	LUMP SUM	
4	8" C900 DR 14 PIPE	3,670	LINEAR FOOT		
5	8" HDPE FUSION WELDED PIPE AT LOW POINT - SHEARER AVE. 21+30	30	LINEAR FOOT		
6	SEWER LATERAL RECONSTRUCTION	5	EACH		
7	BLOW OFF ASSEMBLY	1	EACH		
8	AIR AND VACUUM RELIEF ASSEMBLY	3	EACH		
9	CONNECTION POINT - SHEARER AVE. AND CHANEY AVE.	1	LUMP SUM	LUMP SUM	
10	CONNECTION POINT - SHEARER AVE. AND HAINES AVE.	1	LUMP SUM	LUMP SUM	
11	CONNECTION POINT - SHEARER AVE. AND ADOREE AVE.	1	LUMP SUM	LUMP SUM	
12	CONNECTION POINT - SHEARER AVE. AND THALBERG AVE.	1	LUMP SUM	LUMP SUM	
13	CONNECTION POINT - SHEARER AVE. AND EL SERENO AVE.	1	LUMP SUM	LUMP SUM	
14	CONNECTION POINT - SHEARER AVE. AND CERRO GORDO AVE.	1	LUMP SUM	LUMP SUM	
15	CONNECTION POINT - SHEARER AVE. AND HACIENDA AVE.	1	LUMP SUM	LUMP SUM	
16	CONNECTION POINT - RICHARD AVE. AT STATION 4+15	1	LUMP SUM	LUMP SUM	
17	CONNECTION POINT - RICHARD AVE. AT STATION 9+59	1	LUMP SUM	LUMP SUM	
18	CONNECTION POINT - STUART AVE. AND SANTA BARBARA AVE.	1	LUMP SUM	LUMP SUM	
19	8" CROSS ASSEMBLY (RICHARD AVE AND STUART AVE.)	1	LUMP SUM	LUMP SUM	
20	FIRE HYDRANT CONNECTION (RICHARD AVE AT 4+98)	1	LUMP SUM	LUMP SUM	
21	FIRE HYDRANT CONNECTION (RICHARD AVE AT 5+98)	1	LUMP SUM	LUMP SUM	
22	REMOVE WHARF HEAD HYDRANT	3	EACH		
23	FIRE HYDRANT ASSEMBLY - SHEARER AVE 17+15 RT	1	LUMP SUM	LUMP SUM	
24	FIRE HYDRANT ASSEMBLY - SHEARER AVE 20+00 LT	1	LUMP SUM	LUMP SUM	
25	FIRE HYDRANT ASSEMBLY - SHEARER AVE 25+00 RT	1	LUMP SUM	LUMP SUM	

26	FIRE HYDRANT ASSEMBLY - SHEARER AVE 30+00	1	LUMP SUM	LUMP SUM	
27	FIRE HYDRANT ASSEMBLY - STUART AVE. 13+13 LT	1	LUMP SUM	LUMP SUM	
28	SERVICE CONNECTION (1-SERVICE)	110	EACH		
29	SERVICE CONNECTION (2-SERVICES)	7	EACH		
30	WATER METER BOX REPLACMENT	10	EACH		
31	SURVEY MONUMENT AND WELL	8	EACH		
32	SUPPLEMENTAL WORK (FLAGGING AND SUPPLEMENTAL TRAFFIC CONTROL)	1	LUMP SUM	$50,000	$50,000
				TOTAL BID	

Unit Prices have been computed in accordance with Paragraph 11.03 of the General Conditions.

Bidder acknowledges that estimated quantities are not guaranteed, and are solely for the purpose of comparison of Bids, and final payment for all Unit Price Bid items will be based on actual quantities, determined as provided in the Contract Documents

ARTICLE 6- TIME OF COMPLETION

6.01 Bidder agrees that the Work will be substantially complete and will be completed and ready for final payment in accordance with Paragraph 14.07 of the General Conditions on or before the dates or within the number of calendar days indicated in the Agreement.

6.02 Bidder accepts the provisions of the Agreement as to liquidated damage.

ARTICLE 7- ATTACHMENTS TO THIS BID

7.01 The following documents are attached to and made a condition of this Bid and must be signed and submitted with the Bid:

A. Section 00420 – Non-Collusion Affidavit

B. Required Bid security in the form of a Bid Bond (Section 00430) or Certified Check (circle type of security provided);

C. Section 00440 – If Bid amount exceeds $10,000, signed Compliance Statement/Certifications of Nonsegregated Facilities RD 400-6). Refer to specific equal opportunity requirements set forth in the General Conditions;

D. Section 00450 – If Bid amount exceeds $25,000, signed Certification Regarding Debarment, Suspension, Ineligibility and Voluntary Exclusion- Lower Tiered Covered Transactions (AD-1048);

E. Section 00460 – If Bid amount exceeds $100,000, signed RD Instruction 1940-Q, Exhibit A-1, Certification for Contracts, Grant, and Loans. Refer to paragraph 18.11 of the General Conditions;

F. Section 00470 – Workers Compensation Certification;

G. Section 00480 – List of Subcontractors

ARTICLE 8- DEFINED TERMS

8.01 The terms used in this Bid with initial capital letters have the meanings stated in the Instructions to Bidders and the General Conditions.

ARTICLE 9 – CALIFORNIA CONTRACTOR'S LICENSE INFORMATION

9.01 The undersigned Bidder is licensed in accordance with Chapter 9, Division 3 of the California Business and Professions Code and section 3300 of the California Public Contract Code, and the laws of California.

Bidders Valid California Contractor's License No. _____ Class _____

Expiration Date: _____

Bidder has contracted under this license number for _____ years.

ARTICLE 10- BID SUBMITTAL

10.01 This Bid is submitted by: _____

The undersigned hereby states that all representation made herein are made under the penalty of perjury.

If Bidder is:

<u>An Individual</u>

Name (typed or printed): _____

By: _____
(Individual's signature)

Doing business as: _____

<u>A Partnership</u>

Partnership Name: _____ (SEAL)

By: _____
(Signature of general partner – attach evidence of authority to sign)

Name (typed or printed): _____

A Corporation

Corporation Name: _____ (SEAL)

State of Incorporation: _____

Type (General Business, Professional, Service, Limited Liability): _____

By: _____
(Signature – attach evidence of authority to sign)

Name (typed or printed): _____

Title: _____

Attest: _____
(Signature of Corporate Secretary)

Date of Qualification to do business in California is ____________.

A Joint Venture

Name of Joint Venturer: _____

First Joint Venturer Name: _____ (SEAL)

By: _____
(Signature of first joint venture partner – attach evidence of authority to sign)

Name (typed or printed): _____

Title: _____

Second Joint Venturer Name: _____ (SEAL)

By: _____
(Signature of second joint venture partner – attach evidence of authority to sign)

Name (typed or printed): _____

Title: _____

(Each joint venturer must sign. The manner of signing for each individual, partnership, and corporation that is a party to the joint venture should be in the manner indicated above.)

Bidder's Business address: _____

_____

Business Phone No. (_____)_____

Business FAX No. (_____)_____

Business E-Mail Address

_____

Employer's Tax ID No. _____

Phone and FAX Numbers, and Address for receipt of official communications, if different from Business contact information:

_____

_____

9.02 Bid submitted on _____, 20___.

END OF SECTION

SECTION 00420

NON COLLUSION AFFIDAVIT TO BE EXECUTED BY BIDDER AND SUBMITTED WITH BID

(Public Contract Code Section 7106)

State of California
County of County of San Luis Obispo
_____, being first duly sworn, deposes and says that he or she is _____of _____ , the party making the foregoing bid, that the bid is not made in the interest of, or on behalf of, any undisclosed person, partnership, company, association, organization, or corporation; that the bid is genuine and not collusive or sham; that the bidder has not directly or indirectly colluded, conspired, connived, or agreed with any bidder or anyone else to put in a sham bid, or that anyone shall refrain from bidding; that the bidder has not in any manner, directly or indirectly, sought by agreement, communication, or conference with anyone to fix the bid price of the bidder or any other bidder, or to fix any overhead, profit, or cost element of the bid price, or of that of any other bidder, or to secure any advantage against the public body awarding the contract of anyone interested in the proposed contract; that all statements contained in the bid are true; and further that the bidder has not, directly or indirectly, submitted his or her bid price or any breakdown thereof, or the contents thereof, or divulged information or data relative thereto, or paid, and will not pay, any fee to any corporation, partnership, company association, organization, bid depository, or to any member or agent thereof to effectuate a collusive or sham bid.

By _____

Subscribed and sworn to before me on _____
(date)

_____
(Notary Public)

(SEAL)

END OF SECTION

SECTION 00430
BID BOND

Any singular reference to Bidder, Surety, Owner or other party shall be considered plural where applicable.

BIDDER *(Name and Address)*:

SURETY *(Name and Address of Principal Place of Business)*:

OWNER *(Name and Address)*:

BID
Bid Due Date:
Description *(Project Name and Include Location)*:

BOND
Bond Number:
Date *(Not earlier than Bid due date)*:
Penal sum _____ $ _____
(Words) (Figures)

Surety and Bidder, intending to be legally bound hereby, subject to the terms set forth below, do each cause this Bid Bond to be duly executed by an authorized officer, agent, or representative.

BIDDER	**SURETY**
_____ (Seal)	_____ (Seal)
Bidder's Name and Corporate Seal	Surety's Name and Corporate Seal
By: _____	By: _____
Signature	Signature (Attach Power of Attorney)
_____	_____
Print Name	Print Name
_____	_____
Title	Title
Attest: _____	Attest: _____
Signature	Signature
_____	_____
Title	Title

Note: Above addresses are to be used for giving any required notice. Provide execution by any additional parties, such as joint venturers, if necessary.

1. Bidder and Surety, jointly and severally, bind themselves, their heirs, executors, administrators, successors, and assigns to pay to Owner upon default of Bidder the penal sum set forth on the face of this Bond. Payment of the penal sum is the extent of Bidder's and Surety's liability. Recovery of such penal sum under the terms of this Bond shall be Owner's sole and exclusive remedy upon default of Bidder.

2. Default of Bidder shall occur upon the failure of Bidder to deliver within the time required by the Bidding Documents (or any extension thereof agreed to in writing by Owner) the executed Agreement required by the Bidding Documents and any performance and payment bonds required by the Bidding Documents.

3. This obligation shall be null and void if:

3.1 Owner accepts Bidder's Bid and Bidder delivers within the time required by the Bidding Documents (or any extension thereof agreed to in writing by Owner) the executed Agreement required by the Bidding Documents and any performance and payment bonds required by the Bidding Documents, or

3.2 All Bids are rejected by Owner, or

3.3 Owner fails to issue a Notice of Award to Bidder within the time specified in the Bidding Documents (or any extension thereof agreed to in writing by Bidder and, if applicable, consented to by Surety when required by Paragraph 5 hereof).

4. Payment under this Bond will be due and payable upon default of Bidder and within 30 calendar days after receipt by Bidder and Surety of written notice of default from Owner, which notice will be given with reasonable promptness, identifying this Bond and the Project and including a statement of the amount due.

5. Surety waives notice of any and all defenses based on or arising out of any time extension to issue Notice of Award agreed to in writing by Owner and Bidder, provided that the total time for issuing Notice of Award including extensions shall not in the aggregate exceed 120 days from Bid due date without Surety's written consent.

6. No suit or action shall be commenced under this Bond prior to 30 calendar days after the notice of default required in Paragraph 4 above is received by Bidder and Surety and in no case later than one year after Bid due date.

7. Any suit or action under this Bond shall be commenced only in a court of competent jurisdiction located in the state in which the Project is located.

8. Notices required hereunder shall be in writing and sent to Bidder and Surety at their respective addresses shown on the face of this Bond. Such notices may be sent by personal delivery, commercial courier, or by United States Registered or Certified Mail, return receipt requested, postage pre-paid, and shall be deemed to be effective upon receipt by the party concerned.

9. Surety shall cause to be attached to this Bond a current and effective Power of Attorney evidencing the authority of the officer, agent, or representative who executed this Bond on behalf of Surety to execute, seal, and deliver such Bond and bind the Surety thereby.

10. This Bond is intended to conform to all applicable statutory requirements. Any applicable requirement of any applicable statute that has been omitted from this Bond shall be deemed to be included herein as if set forth at length. If any provision of this Bond conflicts with any applicable statute, then the provision of said statute shall govern and the remainder of this Bond that is not in conflict therewith shall continue in full force and effect.

11. The term “Bid” as used herein includes a Bid, offer, or proposal as applicable.

END OF SECTION

SECTION 00440

COMPLIANCE STATEMENT

This statement relates to a proposed contract
with _____

_____
(Name of borrower or grantee)

who expects to finance the contract with assistance from either the Rural Housing Service (RHS), Rural Business-Cooperative Service (RBS), or the Rural Utilities Service (RUS) or their successor agencies, United States Department of Agriculture (whether by a loan, grant, loan insurance, guarantee, or other form of financial assistance). I am the undersigned bidder or prospective contractor. I represent that:

1. I **[ ]** have, **[ ]** have not, participated in a previous contract or subcontract subject to Executive Order 11246 (regarding equal employment opportunity) or a preceding similar Executive Order.

2. If I have participated in such a contract or subcontract, I **[ ]** have, **[ ]** have not, filed all compliance reports that I have been required to file in connection with the contract or subcontract.

If the proposed contract is for $50,000 or more and I have 50 or more employees, I also represent that:

3. I **[ ]** have, **[ ]** have not, previously had contracts subject to the written affirmative action program requirements of the Secretary of Labor.

4. If I have participated in such a contract or subcontract, I **[ ]** have, **[ ]** have not, developed and placed on file at each establishment affirmative action programs as required by the rules and regulations of the Secretary of Labor.

I understand that if I have failed to file any compliance reports that have been required of me, I am not eligible and will not be eligible to have my bid considered or to enter into the proposed contract unless and until I make an arrangement regarding such reports that is satisfactory to either the RHS, RBS, or RUS, or to the office where the reports are required to be filed.

I also certify that I do not maintain or provide for my employees any segregated facilities at any of my establishments, and that I do not permit my employees to perform their services at any location, under my control, where segregated facilities are maintained. I certify further that I will not maintain or provide for my employees any segregated facilities at any of my establishments, and that I will not permit my employees to perform their services at any location, under my control, where segregated facilities are maintained. I agree that a breach of this certification is a violation of the Equal Opportunity clause in my contract. As used in this certification, the term "segregated facilities" means any waiting rooms, work areas, rest rooms and wash rooms, restaurants and other eating areas, time clocks, locker rooms and other storage or dressing areas,

parking lots, drinking fountains, recreation or entertainment areas, transportation and housing facilities provided for employees which are segregated by explicit directive or are in fact segregated on the basis of race, creed, color, or national origin, because of habit, local custom, or otherwise. I further agree that (except where I have obtained identical certifications from proposed subcontractors prior to the award of subcontracts exceeding $10,000 which are not exempt from the provisions of the Equal Opportunity clause; that I will retain such certifications in my files; and that I will forward the following notice to such proposed subcontractors (except where the proposed subcontractors have submitted identical certifications for specific time periods): (See Reverse).

RD 400-6 (Rev. 2-98)

NOTICE TO PROSPECTIVE SUBCONTRACTORS OF REQUIREMENTS
FOR
CERTIFICATIONS OF NON-SEGREGATED FACILITIES

A certification of Nonsegregated Facilities, as required by the May 9, 1967, order (32F.R. 7439, May 19, 1967) on Elimination of Segregated Facilities, by the Secretary of Labor, must be submitted prior to the award of a subcontract exceeding $10,000 which is not exempt from the provisions of the Equal Opportunity Clause. The certification may be submitted either for each subcontract or for all subcontracts during a period (i.e., quarterly, semiannually, or annually)

NOTE: The penalty for making false statements in offers is prescribed in 18 U.S.C. 1001.

Date**:**_____ _____

Signature of Bidder or Prospective Contractor

_____

Address (including Zip Code)

END OF SECTION

SECTION 00450

CERTIFICATION REGARDING DEBARMENT

U.S. DEPARTMENT OF AGRICULTURE

Certification Regarding Debarment, Suspension, Ineligibility and Voluntary Exclusion – Lower Tier Covered Transactions.

This certification is required by the regulations implementing Executive Order 12549, Debarment and Suspension, 7 CFR Part 3017.510, Participants' responsibilities. The regulations were published as Part IV of the January 30, 1989, Federal Register (pages 4722-4733). Copies of the regulations may be obtained by contacting the Department of Agriculture agency with which this transaction originated.

(BEFORE COMPLETING CERTIFICATION, READ INSTRUCTIONS ON REVERSE)

(1) The prospective lower tier participant certifies, by submission of this proposal, that neither it nor its principals is presently debarred, suspended, proposed for debarment, declared ineligible, or voluntarily excluded from participation in this transaction by any Federal
department or agency.

(2) Where the prospective lower tier participant is unable to certify to any of the statements in
This certification, such prospective participant shall attach an explanation to this proposal.

Organization Name PR/Award Number or Project Name

Name(s) and Title(s) of Authorized Representative(s)

Signature(s) Date

Form AD-1048 (1/92)

Instructions for Certification

1. By signing and submitting this form, the prospective lower tier participant is providing the certification set out on the reverse side in accordance with these instructions.

2. The certification in this clause is a material representation of fact upon which reliance was placed when this transaction was entered into. If it is later determined that the prospective lower tier participant knowingly rendered an erroneous certification, in addition to other remedies available to the Federal Government, the department or agency with which this transaction originated may pursue available remedies, including suspension and/or debarment.

3. The prospective lower tier participant shall provide immediate written notice to the person to which this proposal is submitted if at any time the prospective lower tier participant learns that its certification was erroneous when submitted or has become erroneous by reason of changed circumstances.

4. The terms "covered transaction," "debarred," "suspended," "ineligible," "lower tier covered transaction," "participant," "person," "primary covered transaction," "principal," "proposal," and "voluntarily excluded," as used in this clause, have the meanings set out in the Definitions and Coverage sections of rules implementing Executive Order 12549. You may contact the person to which this proposal is submitted for assistance in obtaining a copy of those regulations.

5. The prospective lower tier participant agrees by submitting this form that, should the proposed covered transaction be entered into, it shall not knowingly enter into any lower tier covered transaction with a person who is debarred, suspended, declared ineligible, or voluntarily excluded from participation in this covered transaction, unless authorized by the department or agency with which this transaction originated.

6. The prospective lower tier participant further agrees by submitting this form that it will include this clause titled "Certification Regarding Debarment, Suspension, Ineligibility and Voluntary Exclusion – Lower Tier Covered Transactions," without modification, in all lower tier covered transactions and in all solicitations for lower tier covered transactions.

7. A participant in a covered transaction may rely upon a certification of a prospective participant in a lower tier covered transaction that it is not debarred, suspended, ineligible, or voluntarily excluded from the covered transaction, unless it knows that the certification is erroneous. A participant may decide the method and frequency by which it determines the eligibility of its principles. Each participant may, but is not required to, check the Nonprocurement List.

8. Nothing contained in the foregoing shall be construed to require establishment of a system of records in order to render in good faith the certification required by this clause. The knowledge and information of a participant is not required to exceed that which is normally possessed by a prudent person in the ordinary course of business dealings.

9. Except for transactions authorized under paragraph 5 of these instructions, if a participant in a covered transaction knowingly entered into a lower tier covered transaction with a person who is suspended, debarred, ineligible, or voluntarily excluded from participation in this transaction, in addition to other remedies available to the Federal Government, the department or agency with which this transaction originated may pursue available remedies, including suspension and/or debarment.

Form AD-1048 (1/92)

END OF SECTION

SECTION 00460

CERTIFICATION FOR CONTRACTS, GRANTS AND LOANS

RD Instruction 1940-Q
Exhibit A-1

The undersigned certifies, to the best of his or her knowledge and belief, that:

1. No Federal appropriated funds have been paid or will be paid, by or on behalf of the undersigned, to any person for influencing or attempting to influence an officer or employee of any agency, a Member of Congress, an officer or employee of Congress, or an employee of a Member of Congress in connection with the awarding of any Federal contract, the making of any Federal grant or Federal loan, and the extension, continuation, renewal, amendment, or modification of any Federal contract, grant or loan.

2. If any funds other than Federal appropriated funds have been paid or will be paid to any person for influencing or attempting to influence an officer or employee of any agency, a member of Congress, an officer or employee of Congress, or an employee of a Member of Congress in connection with this Federal contract, grant or loan, the undersigned shall complete and submit Standard From – LLL, "Disclosure of Lobbying Activities," in accordance with its instructions.

3. The undersigned shall require that the language of this certification be included in the award documents for all subawards at all tiers (including contracts, subcontracts, and subgrants under grants and loans) and that all subrecipients shall certify and disclose accordingly.

This certification is a material representation of fact upon which reliance was placed when this transaction was made or entered into. Submission of this certification is a prerequisite for making or entering into this transaction imposed by section 1352, title 31, U.S. Code. Any person who fails to file the required certification shall be subject to a civil penalty of not less than $10,000 and not more than $100,000 for each such failure.

_____ _____
(Signature) (Date)

_____
(Name)

_____
(Title)

(08-21-91) PN 171

END OF SECTION

SECTION 00470

CONTRACTOR'S CERTIFICATION REGARDING WORKERS' COMPENSATION INSURANCE

State of California

County of San Luis Obispo

I am aware of the provisions of Section 3700 of the Labor Code which require every employer to be insured against liability for workers' compensation or to undertake self-insurance in accordance with the provisions of that code, and I will comply with such provisions before commending the performance of the work of this Contract.

_____
(Name of Bidder)

_____
(Signature)

_____
(Name)

_____
(Title)

_____
(Date)

END OF SECTION

SECTION 00480

LIST OF SUBCONTRACTORS

In compliance with the provisions of Sections 4100-4113 of the Public Contract Code of the State of California, and any amendments thereto, the undersigned bidder sets forth the following:

a. The name and location of the place of business of each subcontractor who will perform work or labor, or render service to the undersigned Prime Contractor in or about the construction of the work or improvement, or a subcontractor licensed by the State of California who, under subcontract to the Prime Contractor, specially fabricates and installs a portion of the work or improvement according to detailed drawings contained in the plans and specifications, in an amount in excess of one-half of one percent of the undersigned Prime Contractor's total bid or in the case of bids for the construction of streets and highways, including bridges, in excess of one-half of one percent or ten thousand dollars ($10,000), whichever is greater.*
b. The portion of the work which will be done by each such subcontractor. Only one subcontractor shall be listed for each such portion.

*When there is a failure to list a subcontractor, as required, the law provides that the Contractor agrees to do the work with his or her own forces. In such case, bidder must be authorized to perform said work. Any bid not complying with the provisions hereof may be rejected.

Work to be Performed	License Number	Percent of Total Contract	Subcontractor's Name and Address
1.			
2.			
3.			
4.			
5.			
6.			
7.			

Work to be Performed	License Number	Percent of Total Contract	Subcontractor's Name and Address
8.			
9.			
10.			
11.			
12.			

(ATTACH ADDITIONAL NUMBERED PAGES IF NEEDED)

BIDDER

_____
(Signature)

_____
(Date)

END OF SECTION

SECTION 00485

ADDITIONAL INSURED ENDORSEMENT

POLICY NUMBER(S): _____

NAMED INSURED: _____

THIS ENDORSEMENT CHANGES THE POLICY. READ IT CAREFULLY.

This endorsement modifies insurance provided under this policy:

In consideration of the premium charged and notwithstanding any inconsistent statement in the policy to which this endorsement is attached or in any endorsement which now or later attaches to the policy, the Company agrees as follows:

SCHEDULE OF ADDITIONAL INSUREDS:

County of San Luis Obispo, its officials, board members, departments, agencies, directors, agents, employees, volunteers and representatives

WHO IS AN INSURED: Section is amended to include as an insured the persons or organizations shown in the Schedule of additional insureds above, but only with respect to liability arising out of "your work" for that insured by or for you.

The Insurance afforded by this policy shall be primary insurance as respects any claim, loss or liability arising out of the Named Insured's operations. Any other insurance maintained by the Additional Insured(s) shall be excess and non-contributory with the insurance provided hereunder. The insurer hereby waives any rights of subrogation against any Additional Insured. Any deductible or self-insured retention due under this policy may be paid or satisfied by any Additional Insured should the Named Insured fail to do so.

By my signature on this endorsement, I warrant that I have authority to bind the insurance company and do so bind the company to this endorsement:

Insurance Company Authorized Representative: Name, Title and Signature:	Date Signed:

END OF SECTION

SECTION 00500

AGREEMENT
BETWEEN OWNER AND CONTRACTOR
FOR CONSTRUCTION CONTRACT (STIPULATED PRICE)

THIS AGREEMENT is by and between the County of San Luis Obispo ("Owner") and

_____ ("Contractor").

Owner and Contractor hereby agree as follows:

ARTICLE 1 – WORK

1.01 Contractor shall complete all Work as specified or indicated in the Contract Documents. The Work is generally described as follows:

The work involves upsizing the existing water distribution system in the County of San Luis Obispo's Community Service Area 10A, along Richard Avenue, Stuart Avenue, and Shearer Avenue in Cayucos, California. The work consists of constructing approximately 3,666 linear feet of 8-inch potable water pipeline, reconnection of service laterals, replacement and/or reconnection of fire hydrants, installation of gate valves, water pollution control, traffic control, reconstruction of pavement, and such other items that are described in the Specifications, shown on the Drawings and/or required for a complete working system..

ARTICLE 2 – THE PROJECT

2.01 The Project for which the Work under the Contract Documents may be the whole or only a part is generally described as follows:

Water System System Upgrades
County Service Area 10A
Cayucos, CA
Contract No. 300383

ARTICLE 3 – DESIGNER AND ENGINEER

3.01 The Project has been designed by the Public Works Department of the County of San Luis Obispo (Designer). The Public Works Department of the County of San Luis Obispo shall also act as the Engineer on the Project.

3.02 The Owner reserves the right to enter into a separate agreement under which a construction management company would to act as Owner's representative, and assume all duties and responsibilities, and have the rights and authority assigned to Engineer in the Contract Documents in connection with the completion of the Work in accordance with the Contract Documents. Until the Owner notifies Contractor that Owner has so engaged the services of a construction management company, the County's Public Works Department shall act as the Engineer, and the Director of the Department shall designate a member of the Department to act in that capacity.

ARTICLE 4 – CONTRACT TIMES

4.01 *Time of the Essence*

A. All time limits for Milestones, if any, Substantial Completion, and completion and readiness for final payment as stated in the Contract Documents are of the essence of the Contract.

4.02 *Days to Achieve Substantial Completion and Final Payment*

A. The Work will be substantially completed within 80 days after the date when the Contract Times commence to run as provided in Paragraph 2.03 of the General Conditions, and completed and ready for final payment in accordance with Paragraph 14.07 of the General Conditions within 95 days after the date when the Contract Times commence to run.

4.03 *Liquidated Damages*

A. Contractor and Owner recognize that time is of the essence as stated in Paragraph 4.01 above and that Owner will suffer financial loss if the Work is not completed within the times specified in Paragraph 4.02 above, plus any extensions thereof allowed in accordance with Article 12 of the General Conditions. The parties also recognize the delays, expense, and difficulties involved in proving in a legal or arbitration proceeding the actual loss suffered by Owner if the Work is not completed on time. Accordingly, instead of requiring any such proof, Owner and Contractor agree that as liquidated damages for delay (but not as a penalty), Contractor shall pay Owner $1,125 for each day that expires after the time specified in Paragraph 4.02 above for Substantial Completion until the Work is substantially complete. After Substantial Completion, if Contractor shall neglect, refuse, or fail to complete the remaining Work within the Contract Time or any proper extension thereof granted by Owner, Contractor shall pay Owner $1,000 for each day that expires after the time specified in Paragraph 4.02 above for completion and readiness for final payment until the Work is completed and ready for final payment.

B. Nothing in this Paragraph 4.03 diminishes or affects Contractor's liability to Owner and any other contractor under direct contract to Owner for the reasonable direct delay and disruption costs incurred by such other contractor as a result of Contractor's failure to satisfy any of the time deadlines set forth above.

ARTICLE 5 – CONTRACT PRICE

5.01 Owner shall pay Contractor for completion of the Work in accordance with the Contract Documents an amount in current funds equal to the sum of the amounts determined pursuant to Paragraphs 5.01.A below:

A. For all Work, at the prices stated in Contractor's Bid, as set forth below:

ITEM NO.	DESCRIPTION	ESTIMATED QUANTITY	UNIT	BID UNIT PRICE	BID PRICE
1	CONSTRUCTION AREA SIGNS	1	LUMP SUM	LUMP SUM	
2	TRAFFIC CONTROL SYSTEM	1	LUMP SUM	LUMP SUM	
3	SHEETING, SHORING, & BRACING	1	LUMP SUM	LUMP SUM	
4	8" C900 DR 14 PIPE	3,670	LINEAR FOOT		
5	8" HDPE FUSION WELDED PIPE AT LOW POINT - SHEARER AVE. 21+30	30	LINEAR FOOT		
6	SEWER LATERAL RECONSTRUCTION	5	EACH		
7	BLOW OFF ASSEMBLY	1	EACH		
8	AIR AND VACUUM RELIEF ASSEMBLY	3	EACH		
9	CONNECTION POINT - SHEARER AVE. AND CHANEY AVE.	1	LUMP SUM	LUMP SUM	
10	CONNECTION POINT - SHEARER AVE. AND HAINES AVE.	1	LUMP SUM	LUMP SUM	
11	CONNECTION POINT - SHEARER AVE. AND ADOREE AVE.	1	LUMP SUM	LUMP SUM	
12	CONNECTION POINT - SHEARER AVE. AND THALBERG AVE.	1	LUMP SUM	LUMP SUM	
13	CONNECTION POINT - SHEARER AVE. AND EL SERENO AVE.	1	LUMP SUM	LUMP SUM	
14	CONNECTION POINT - SHEARER AVE. AND CERRO GORDO AVE.	1	LUMP SUM	LUMP SUM	
15	CONNECTION POINT - SHEARER AVE. AND HACIENDA AVE.	1	LUMP SUM	LUMP SUM	
16	CONNECTION POINT - RICHARD AVE. AT STATION 4+15	1	LUMP SUM	LUMP SUM	
17	CONNECTION POINT - RICHARD AVE. AT STATION 9+59	1	LUMP SUM	LUMP SUM	
18	CONNECTION POINT - STUART AVE. AND SANTA BARBARA AVE.	1	LUMP SUM	LUMP SUM	
19	8" CROSS ASSEMBLY (RICHARD AVE AND STUART AVE.)	1	LUMP SUM	LUMP SUM	
20	FIRE HYDRANT CONNECTION (RICHARD AVE AT 4+98)	1	LUMP SUM	LUMP SUM	
21	FIRE HYDRANT CONNECTION (RICHARD AVE AT 5+98)	1	LUMP SUM	LUMP SUM	
22	REMOVE WHARF HEAD HYDRANT	3	EACH		
23	FIRE HYDRANT ASSEMBLY - SHEARER AVE 17+15 RT	1	LUMP SUM	LUMP SUM	
24	FIRE HYDRANT ASSEMBLY - SHEARER AVE 20+00 LT	1	LUMP SUM	LUMP SUM	
25	FIRE HYDRANT ASSEMBLY - SHEARER AVE 25+00 RT	1	LUMP SUM	LUMP SUM	

26	FIRE HYDRANT ASSEMBLY - SHEARER AVE 30+00 LT	1	LUMP SUM	LUMP SUM	
27	FIRE HYDRANT ASSEMBLY - STUART AVE. 13+13 LT	1	LUMP SUM	LUMP SUM	
28	SERVICE CONNECTION (1-SERVICE)	110	EACH		
29	SERVICE CONNECTION (2-SERVICES)	7	EACH		
30	WATER METER BOX REPLACEMENT	10	EACH		
31	SURVEY MONUMENT AND WELL	8	EACH		
32	SUPPLEMENTAL WORK (FLAGGING AND SUPPLEMENTAL TRAFFIC CONTROL)	1	LUMP SUM	$50,000	$50,000
				TOTAL	

The Bid prices for Unit Price Work set forth as of the Effective Date of the Agreement are based on estimated quantities. As provided in Paragraph 11.03 of the General Conditions, estimated quantities are not guaranteed, and determinations of actual quantities and classifications are to be made by Engineer as provided in Paragraph 9.07 of the General Conditions.

ARTICLE 6 – PAYMENT PROCEDURES

6.01 *Submittal and Processing of Payments*

A. Contractor shall submit Applications for Payment in accordance with Article 14 of the General Conditions. Applications for Payment will be processed by Engineer as provided in the General Conditions.

6.02 *Progress Payments; Retainage*

A. Within thirty (30) days of Engineer's receipt of a proper Application for Payment under Article 14 of the General Conditions, Owner shall make progress payments on account of the Contract Price on the basis of Contractor's Applications for Payment as provided in Paragraph 6.02.A.1 below. All such payments will be measured by the schedule of values established as provided in Paragraph 2.07.A of the General Conditions (and in the case of Unit Price Work based on the number of units completed) or, in the event there is no schedule of values, as provided in the General Requirements.

1. Prior to Substantial Completion, progress payments will be made in an amount equal to the percentage indicated below but, in each case, less the aggregate of payments previously made and less such amounts as Engineer may determine or Owner may

withhold, including but not limited to liquidated damages, in accordance with Paragraph 14.02 of the General Conditions.

a. 95 percent of Work completed (with the balance being retainage); and

b. 95 percent of cost of materials and equipment not incorporated in the Work (with the balance being retainage).

B. Within 60 days of Substantial Completion of all Work under the Contract Documents, Owner shall pay to Contractor an amount sufficient to reduce the retainage withheld on Work properly completed to zero percent of the Work completed, less such amounts as Engineer shall determine in accordance with Paragraph 14.02.B.5 of the General Conditions and less 150 percent of Engineer's estimate of the value of Work to be completed or corrected as shown on the tentative list of items to be completed or corrected attached to the certificate of Substantial Completion. In the event of any disputes between the Owner and Contractor, the Owner may also withhold an additional amount not to exceed 150 percent of the disputed amount. Nothing in this paragraph shall require the Owner to pay any amounts which the Owner refuses to pay pursuant to Paragraph 14.02.D. of the General Conditions (or any other provision in the Contract Documents authorizing the withholding or reduction of any payment to the Contractor).

6.03 *Final Payment*

A. Upon final completion and acceptance of the Work in accordance with Paragraph 14.07 of the General Conditions, Owner shall pay the remainder of the Contract Price as provided in said Paragraph 14.07.

ARTICLE 7 – INTEREST

7.01 All moneys not paid when due as provided in Article 14 of the General Conditions shall bear interest, if applicable, as provided in the Contract Documents.

ARTICLE 8 – CONTRACTOR'S REPRESENTATIONS

8.01 In order to induce Owner to enter into this Agreement, Contractor makes the following representations:

A. Contractor has examined and carefully studied the Contract Documents and the other related data identified in the Bidding Documents.

B. Contractor has visited the Site and become familiar with and is satisfied as to the general, local, and Site conditions that may affect cost, progress, and performance of the Work.

C. Contractor is familiar with and is satisfied as to all federal, state, and local Laws and Regulations that may affect cost, progress, and performance of the Work.

D. Contractor has carefully studied all: (1) reports of explorations and tests of subsurface conditions at or contiguous to the Site, if any, and all drawings of physical conditions relating to existing surface or subsurface structures at the Site (except Underground Facilities), if any, that have been identified in Paragraph 4.02 of the General Conditions as containing reliable "technical data," and (2) reports and drawings of Hazardous

Environmental Conditions, if any, at the Site that have been identified in Paragraph 4.06 of the General Conditions as containing reliable "technical data."

E. Contractor has considered the information known to Contractor; information commonly known to contractors doing business in the locality of the Site; information and observations obtained from visits to the Site; the Contract Documents; and the Site-related reports and drawings identified in the Contract Documents, if any, with respect to the effect of such information, observations, and documents on (1) the cost, progress, and performance of the Work; (2) the means, methods, techniques, sequences, and procedures of construction to be employed by Contractor, including any specific means, methods, techniques, sequences, and procedures of construction expressly required by the Contract Documents; and (3) Contractor's safety precautions and programs.

F. Based on the information and observations referred to in Paragraph 8.01.E above, Contractor does not consider that further examinations, investigations, explorations, tests, studies, or data are necessary for the performance of the Work at the Contract Price, within the Contract Times, and in accordance with the other terms and conditions of the Contract Documents.

G. Contractor is aware of the general nature of work to be performed by Owner and others at the Site that relates to the Work as indicated in the Contract Documents.

H. Contractor has given Owner written notice of all conflicts, errors, ambiguities, or discrepancies that Contractor has discovered in the Contract Documents, and the written resolution thereof by Owner is acceptable to Contractor.

I. The Contract Documents are generally sufficient to indicate and convey understanding of all terms and conditions for performance and furnishing of the Work.

ARTICLE 9 – CONTRACT DOCUMENTS

9.01 *Contents*

A. The Contract Documents consist of the following:

1. This Agreement.

2. General Conditions.

3. Specifications as listed in the table of contents of the Project Manual.

4. Drawings as listed in the table of contents of the Project Manual

5. Addenda (numbers _____ to _____, inclusive).

6. Exhibits to this Agreement (enumerated as follows):

a. List of Subcontractors;

b. Compliance Statement;

c. Certification Regarding Debarment;

d. Contractor's Certification Regarding Worker's Compensation Insurance;

e. Certification for Contracts, Grants, and Loans;

7. The following which may be delivered or issued on or after the Effective Date of the Agreement and are not attached hereto:

   a. Notice to Proceed (pages _____ to _____, inclusive).

   b. Work Change Directives.

   c. Change Orders.

B. The documents listed in Paragraph 9.01.A are attached to this Agreement (except as expressly noted otherwise above).

C. There are no Contract Documents other than those listed above in this Article 9.

D. The Contract Documents may only be amended, modified, or supplemented as provided in Paragraph 3.04 of the General Conditions.

E. Contractor agrees that the Payment Bond and Performance Bond attached to this Agreement are for reference purposes only, and shall not be considered a part of this Agreement or any other Contract Document. Contractor further agrees that said bonds are separate obligations of the Contractor and its surety, and that any attorney's fee provision contained in any payment bond or performance bond shall not apply to any legal action between Contractor and Owner to enforce any provision of the Contract Documents.

ARTICLE 10 – MISCELLANEOUS

10.01 *Terms*

A. Terms used in this Agreement will have the meanings stated in the General Conditions.

10.02 *Assignment of Contract*

A. No assignment by a party hereto of any rights under or interests in the Contract will be binding on another party hereto without the written consent of the party sought to be bound; and, specifically but without limitation, moneys that may become due and moneys that are due may not be assigned without such consent (except to the extent that the effect of this restriction may be limited by law), and unless specifically stated to the contrary in any written consent to an assignment, no assignment will release or discharge the assignor from any duty or responsibility under the Contract Documents.

10.03 *Successors and Assigns*

A. Owner and Contractor each binds itself, its partners, successors, assigns, and legal representatives to the other party hereto, its partners, successors, assigns, and legal representatives in respect to all covenants, agreements, and obligations contained in the Contract Documents.

10.04 *Severability*

A. Any provision or part of the Contract Documents held to be void or unenforceable under any Law or Regulation shall be deemed stricken, and all remaining provisions shall continue to be valid and binding upon Owner and Contractor, who agree that the Contract Documents shall be reformed to replace such stricken provision or part thereof with a valid and enforceable provision that comes as close as possible to expressing the intention of the stricken provision.

10.05 *Contractor's Certifications*

A. Contractor certifies that it has not engaged in corrupt, fraudulent, collusive, or coercive practices in competing for or in executing the Contract. For the purposes of this Paragraph 10.05:

1. "corrupt practice" means the offering, giving, receiving, or soliciting of any thing of value likely to influence the action of a public official in the bidding process or in the Contract execution;

2. "fraudulent practice" means an intentional misrepresentation of facts made (a) to influence the bidding process or the execution of the Contract to the detriment of Owner, (b) to establish Bid or Contract prices at artificial non-competitive levels, or (c) to deprive Owner of the benefits of free and open competition;

3. "collusive practice" means a scheme or arrangement between two or more Bidders, with or without the knowledge of Owner, a purpose of which is to establish Bid prices at artificial, non-competitive levels; and

4. "coercive practice" means harming or threatening to harm, directly or indirectly, persons or their property to influence their participation in the bidding process or affect the execution of the Contract.

10.06 *Attorneys Fees*

A. No provisions of the Contract Documents provide either the Contractor or the Owner the right to be awarded any attorney's fees and/or costs under Civil Code section 1717 in any legal action brought by either party to enforce any provision of the Contract Documents against the other party. The parties agree that any references to attorney's fees in language describing indemnification obligations do not constitute a contractual provision that would provide either the Contractor or the Owner the right to be awarded any attorney's fees and/or costs under Civil Code section 1717 in any legal action brought by either party to enforce any provision of the Contract Documents against the other party. Any other language in the Contract Documents providing for a recovery of attorney's fees shall be strictly construed as not including the recovery of any attorney's fees incurred by either Contractor or Owner in any legal action brought by either party to enforce any provision of the Contract Documents against the other party.

B. The parties agree that the Contract Documents contain no provisions that would allow either the Contractor or the Owner to be awarded attorney's fees and/or costs under Civil Code section 1717. Nothing in this Paragraph 10.06. affects any right by Contractor or

Owner to recover attorney's fees or costs by operation of any law other than Civil Code section 1717.

C. In the event of any conflict between language in this Paragraph 10.06 and any other language in the Contract Documents, the language in Paragraph 10.06 shall prevail.

IN WITNESS WHEREOF, Owner and Contractor have signed this Agreement. Counterparts have been delivered to Owner and Contractor. All portions of the Contract Documents have been signed or have been identified by Owner and Contractor or on their behalf.

This Agreement will be effective on _____ (which is the Effective Date of the Agreement).

OWNER:

County of San Luis Obispo

By: _____

Title: Chairperson of the Board of Supervisors

Attest: _____

Title: Clerk of the Board of Supervisors

Address for giving notices:

_____

_____

_____

APPROVAL RECOMMENDED

PAAVO OGREN

By: Dave Flynn for PAO

Director of Public Works

Date: 4/10/13

APPROVED AS TO FORM AND LEGAL EFFECT:

RITA L. NEAL

County Counsel

By: Patrick Jeu

Date: 4/9/13

CONTRACTOR

_____

By: _____

Title: _____

(If Contractor is a corporation, a partnership, or a joint venture, attach evidence of authority to sign.)

Attest: _____

Title: _____

Address for giving notices:

_____

_____

_____

License No.: _____

(Where applicable)

NOTE TO USER: Use in those states or other jurisdictions where applicable or required.

Agent for service of process:

_____

SECTION 00510

NOTICE OF AWARD

Date: _____

Project: Water System System Upgrades, County Service Area 10A, Cayucos, CA	
Owner: County of San Luis Obispo	Contract No.: 300383
Contract:	
Bidder:	
Bidder's Address: *[send Notice of Award Certified Mail, Return Receipt Requested]*	

You are notified that your Bid dated_____ for the above Contract has been considered. You are the Successful Bidder and are awarded a Contract for Water System System Upgrades, County Service Area 10A, Cayucos, CA, Contract No. 300383.

The Contract Price of your Contract is $_.

6 copies of the proposed Contract Documents (except full size Drawings) accompany this Notice of Award.

4 sets of the full size Drawings will be delivered separately or otherwise made available to you immediately.

You must comply with the following conditions precedent within 15 days of the date you receive this Notice of Award:

1. Deliver to the Owner 6 fully executed counterparts of the Contract Documents.
2. Deliver with the executed Contract Documents the Contract security [Bonds] and certificates of insurance as specified in the Instructions to Bidders (Article 20), and General Conditions (Paragraph 5.01).
3. Deliver with the executed Contract Documents the Additional Insured Endorsement as specified in the General Conditions (Paragraph 5.04.C.3)

Failure to comply with these conditions within the time specified will entitle Owner to consider you in default, annul this Notice of Award, and declare your Bid security forfeited.

Within 10 days after you comply with the above conditions, Owner will return to you one fully executed counterpart of the Contract Documents.

County of San Luis Obispo
Owner

By: _____
Authorized Signature

_____
Title

Copy: File & Engineer

END OF SECTION

SECTION 00550

NOTICE TO PROCEED

Date: _____

Project: Water System System Upgrades, County Service Area 10A, Cayucos, CA	
Owner: County of San Luis Obispo	Owner's Contract No.: 300383
Contract:	
Contractor:	
Contractor's Address: *[send Certified Mail, Return Receipt Requested]*	

You are notified that the Contract Times under the above Contract will commence to run on_____. On or before that date, you are to start performing your obligations under the Contract Documents. In accordance with Article 4 of the Agreement, the number of days to achieve Substantial Completion is _____, and the number of days to achieve readiness for final payment is _____.

Also, before you may start any Work at the Site, you must:

_____ *[add other requirements]*.

_____	County of San Luis Obispo Owner
_____	Given by: Authorized Signature
_____	_____ Title
_____	_____ Date

Copy to Engineer & File

END OF SECTION

SECTION 00610

PERFORMANCE BOND

Any singular reference to Contractor, Surety, Owner, or other party shall be considered plural where applicable.

CONTRACTOR (*Name and Address*):

SURETY (*Name, and Address of Principal Place of Business*):

OWNER (*Name and Address*):
County of San Luis Obispo
1055 Monterey Street
San Luis Obispo, CA 93408

CONTRACT
Effective Date of Agreement:
Amount:
Description (*Name and Location*): Water System System Upgrades, CSA 10A, Cayucos, CA

BOND
Bond Number:
Premium $
Date (*Not earlier than Effective Date of Agreement*):
Penal Amount:

Surety and Contractor, intending to be legally bound hereby, subject to the terms set forth below, do each cause this Performance Bond to be duly executed by an authorized officer, agent, or representative.

CONTRACTOR AS PRINCIPAL

_____ (Seal)
Contractor's Name and Corporate Seal

By: _____
Signature

_____
Print Name

_____
Title

Attest: _____
Signature

_____
Title

SURETY

_____ (Seal)
Surety's Name and Corporate Seal

By: _____
Signature (Attach Power of Attorney)

_____
Print Name

_____
Title

Attest: _____
Signature

_____
Title

Note: Provide execution by additional parties, such as joint venturers, if necessary.

Contractor and Surety, jointly and severally, bind themselves, their heirs, executors, administrators, successors, and assigns to Owner for the performance of the Contract, which is incorporated herein by reference.

1. If Contractor performs the Contract, Surety and Contractor have no obligation under this Bond, except to participate in conferences as provided in Paragraph 2.1.

2. Surety's obligation under this Bond shall arise after:
   - 2.1 Owner has notified Contractor and Surety, at the addresses described in Paragraph 9 below, that Owner is considering declaring a Contractor Default and has requested and attempted to arrange a conference with Contractor and Surety to be held not later than 15 days after receipt of such notice to discuss methods of performing the Contract. If Owner, Contractor, and Surety agree, Contractor shall be allowed a reasonable time to perform the Contract, but such an agreement shall not waive Owner's right, if any, subsequently to declare a Contractor Default; and
   - 2.2 Owner has declared a Contractor Default and formally terminated Contractor's right to complete the Contract. Such Contractor Default shall not be declared earlier than 20 days after Contractor and Surety have received notice as provided in Paragraph 2.1; and
   - 2.3 Owner has agreed to pay the Balance of the Contract Price to:
     1. Surety in accordance with the terms of the Contract; or
     2. Another contractor selected pursuant to Paragraph 3.3 to perform the Contract.

3. When Owner has satisfied the conditions of Paragraph 2, Surety shall promptly, and at Surety's expense, take one of the following actions:
   - 3.1 Arrange for Contractor, with consent of Owner, to perform and complete the Contract; or
   - 3.2 Undertake to perform and complete the Contract itself, through its agents or through independent contractors; or
   - 3.3 Obtain bids or negotiated proposals from qualified contractors acceptable to Owner for a contract for performance and completion of the Contract, arrange for a contract to be prepared for execution by Owner and contractor selected with Owner's concurrence, to be secured with performance and payment bonds executed by a qualified surety equivalent to the bonds issued on the Contract, and pay to Owner the amount of damages as described in Paragraph 5 in excess of the Balance of the Contract Price incurred by Owner resulting from Contractor Default; or
   - 3.4 Waive its right to perform and complete, arrange for completion, or obtain a new contractor, and with reasonable promptness under the circumstances:
     1. After investigation, determine the amount for which it may be liable to Owner and, as soon as practicable after the amount is determined, tender payment therefor to Owner; or
     2. Deny liability in whole or in part and notify Owner citing reasons therefor.

4. If Surety does not proceed as provided in Paragraph 3 with reasonable promptness, Surety shall be deemed to be in default on this Bond 15 days after receipt of an additional written notice from Owner to Surety demanding that Surety perform its obligations under this Bond, and Owner shall be entitled to enforce any remedy available to Owner. If Surety proceeds as provided in Paragraph 3.4, and Owner refuses the payment tendered or Surety has denied liability, in whole or in part, without further notice Owner shall be entitled to enforce any remedy available to Owner.

5. After Owner has terminated Contractor's right to complete the Contract, and if Surety elects to act under Paragraph 3.1, 3.2, or 3.3 above, then the responsibilities of Surety to Owner shall not be greater than those of Contractor under the Contract, and the responsibilities of Owner to Surety shall not be greater than those of Owner under the Contract. To the limit of the amount of this Bond, but subject to commitment by Owner of the Balance of the Contract Price to mitigation of costs and damages on the Contract, Surety is obligated without duplication for:

5.1 The responsibilities of Contractor for correction of defective Work and completion of the Contract;
5.2 Additional legal, design professional, and delay costs resulting from Contractor's Default, and resulting from the actions of or failure to act of Surety under Paragraph 3; and
5.3 Liquidated damages, or if no liquidated damages are specified in the Contract, actual damages caused by delayed performance or non-performance of Contractor.

6. Surety shall not be liable to Owner or others for obligations of Contractor that are unrelated to the Contract, and the Balance of the Contract Price shall not be reduced or set off on account of any such unrelated obligations. No right of action shall accrue on this Bond to any person or entity other than Owner or its heirs, executors, administrators, or successors.

7. Surety hereby waives notice of any change, including changes of time, to Contract or to related subcontracts, purchase orders, and other obligations.

8. Any proceeding, legal or equitable, under this Bond may be instituted in any court of competent jurisdiction in the location in which the Work or part of the Work is located, and shall be instituted within four years after Surety refuses or fails to perform its obligations under this Bond. If the provisions of this paragraph are void or prohibited by law, the minimum period of limitation available to sureties as a defense in the jurisdiction of the suit shall be applicable.

9. Notice to Surety, Owner, or Contractor shall be mailed or delivered to the address shown on the signature page.

10. When this Bond has been furnished to comply with a statutory requirement in the location where the Contract was to be performed, any provision in this Bond conflicting with said statutory requirement shall be deemed deleted herefrom and provisions conforming to such statutory requirement shall be deemed incorporated herein. The intent is that this Bond shall be construed as a statutory bond and not as a common law bond.

11. If an action is brought to enforce the liability on the Bond, the Surety will pay reasonable attorney's fees, to be fixed by the court.

12. Definitions.
12.1 Balance of the Contract Price: The total amount payable by Owner to Contractor under the Contract after all proper adjustments have been made, including allowance to Contractor of any amounts received or to be received by Owner in settlement of insurance or other Claims for damages to which Contractor is entitled, reduced by all valid and proper payments made to or on behalf of Contractor under the Contract.
12.2 Contract: The agreement between Owner and Contractor identified on the signature page, including all Contract Documents and changes thereto.
12.3 Contractor Default: Failure of Contractor, which has neither been remedied nor waived, to perform or otherwise to comply with the terms of the Contract.

FOR INFORMATION ONLY – (*Name, Address and Telephone*) Surety Agency or Broker: Owner's Representative (*Engineer or other party*):

END OF SECTION

SECTION 00615

PAYMENT BOND

Any singular reference to Contractor, Surety, Owner, or other party shall be considered plural where applicable.

CONTRACTOR (*Name and Address*):

SURETY (*Name, and Address of Principal Place of Business*):

OWNER (*Name and Address*):
County of San Luis Obispo
1055 Monterey Street, San Luis Obispo, CA 93408

CONTRACT
Effective Date of Agreement:
Amount:
Description *(Name and Location)*: Water System System Upgrades, County Service Area 10A, Cayucos, CA

BOND
Bond Number:
Premium: $
Date (*Not earlier than Effective Date of Agreement*):
Penal Amount:

Surety and Contractor, intending to be legally bound hereby, subject to the terms set forth below, do each cause this Payment Bond to be duly executed by an authorized officer, agent, or representative.

CONTRACTOR AS PRINCIPAL

_____ (Seal)
Contractor's Name and Corporate Seal

By: _____
Signature

_____
Print Name

_____
Title

Attest: _____
Signature

_____
Title

SURETY

_____ (Seal)
Surety's Name and Corporate Seal

By: _____
Signature (Attach Power of Attorney)

_____
Print Name

_____
Title

Attest: _____
Signature

_____
Title

Note: Provide execution by additional parties, such as joint venturers, if necessary.

1. Contractor and Surety, jointly and severally, bind themselves, their heirs, executors, administrators, successors, and assigns to Owner to pay for labor, materials, and equipment furnished by Claimants for use in the performance of the Contract, which is incorporated herein by reference.

2. With respect to Owner, this obligation shall be null and void if Contractor:
   2.1 Promptly makes payment, directly or indirectly, for all sums due Claimants, and
   2.2 Defends, indemnifies, and holds harmless Owner from all claims, demands, liens, or suits alleging non-payment by Contractor by any person or entity who furnished labor, materials, or equipment for use in the performance of the Contract, provided Owner has promptly notified Contractor and Surety (at the addresses described in Paragraph 12) of any claims, demands, liens, or suits and tendered defense of such claims, demands, liens, or suits to Contractor and Surety

3. With respect to Claimants, this obligation shall be null and void if Contractor promptly makes payment, directly or indirectly, for all sums due.

4. Surety shall have no obligation to Claimants under this Bond until:
   The Contractor or a subcontractor fails to pay any of the following:
   (1) A person authorized under Civil Code Section 3181 (Civil Code Section 9100 effective July 1. 2012) to assert a claim against a payment bond.
   (2) Amounts due under the Unemployment Insurance Code with respect to work or labor performed pursuant to the public works contract.
   (3) Amounts required to be deducted, withheld, and paid over to the Employment Development Department from the wages of employees of the contractor and subcontractors under Section 13020 of the Unemployment Insurance Code with respect to the work and labor.

5. Not used

6. Reserved.

7. Surety's total obligation shall not exceed the penal amount of this Bond, and the amount of this Bond shall be credited for any payments made in good faith by Surety.

8. Amounts owed by Owner to Contractor under the Contract shall be used for the performance of the Contract and to satisfy claims, if any, under any performance bond. By Contractor furnishing and Owner accepting this Bond, they agree that all funds earned by Contractor in the performance of the Contract are dedicated to satisfy obligations of Contractor and Surety under this Bond, subject to Owner's priority to use the funds for the completion of the Work.

9. Surety shall not be liable to Owner, Claimants, or others for obligations of Contractor that are unrelated to the Contract. Owner shall not be liable for payment of any costs or expenses of any Claimant under this Bond, and shall have under this Bond no obligations to make payments to, give notices on behalf of, or otherwise have obligations to Claimants under this Bond.

10. Surety hereby waives notice of any change, including changes of time, to the Contract or to related subcontracts, purchase orders, and other obligations.

11. No suit or action shall be commenced by a Claimant under this Bond other than in a court of competent jurisdiction in the location in which the Work or part of the Work is located or after the expiration of periods of limitation established by applicable provisions of the California Civil Code. If the provisions of this paragraph are void or prohibited by law, the minimum period of limitation available to sureties as a defense in the jurisdiction of the suit shall be applicable.

12. Notice to Surety, Owner, or Contractor shall be mailed or delivered to the addresses shown on the signature page. Actual receipt of notice by Surety, Owner, or Contractor, however accomplished, shall be sufficient compliance as of the date received at the address shown on the signature page.

13. When this Bond has been furnished to comply with a statutory requirement in the location where the Contract was to be performed, any provision in this Bond conflicting with said statutory requirement shall be

deemed deleted herefrom and provisions conforming to such statutory requirement shall be deemed incorporated herein. The intent is that this Bond shall be construed as a statutory Bond and not as a common law bond.

14. Upon request of any person or entity appearing to be a potential beneficiary of this Bond, Contractor shall promptly furnish a copy of this Bond or shall permit a copy to be made.

15. The Bond shall be conditioned for the payment in full of the claims of all claimants and shall inure to the benefit of any person authorized under Civil Code Section 3181 (Civil Code Section 9100 effective July 1. 2012) to assert a claim against a payment bond so as to give a right of action to that person or that person's assigns in an action to enforce the liability on the bond.

16. If an action is brought to enforce the liability on the Bond, the Surety will pay a reasonable attorney's fee, to be fixed by the court.

17. Definitions

17.1 Claimant: An individual or entity identified in California a Civil Code Sections 3110, 3111 or 3112 (Civil Code Section 9100 effective July 1. 2012) or in Section 4107.7 of the Public Contract Code.

17.2 Contract: The agreement between Owner and Contractor identified on the signature page, including all Contract Documents and changes thereto.

FOR INFORMATION ONLY – (*Name, Address, and Telephone*) Surety Agency or Broker: Owner's Representative (*Engineer or other*):

END OF SECTION

SECTION 00625

CERTIFICATE OF SUBSTANTIAL COMPLETION

Project:	
Owner:	Owner's Contract No.:
Contract:	Engineer's Project No.:

This [tentative] [definitive] Certificate of Substantial Completion applies to:

☐ All Work under the Contract Documents: ☐ The following specified portions of the Work:

_____

_____

_____

_____

_____
Date of Substantial Completion

The Work to which this Certificate applies has been inspected by authorized representatives of Owner, Contractor, and Engineer, and found to be substantially complete. The Date of Substantial Completion of the Project or portion thereof designated above is hereby declared and is also the date of commencement of applicable warranties required by the Contract Documents, except as stated below.

A [tentative] [definitive] list of items to be completed or corrected is attached hereto. This list may not be all-inclusive, and the failure to include any items on such list does not alter the responsibility of the Contractor to complete all Work in accordance with the Contract Documents.

The responsibilities between Owner and Contractor for security, operation, safety, maintenance, heat, utilities, insurance and warranties shall be as provided in the Contract Documents except as amended as follows:

☐ Amended Responsibilities ☐ Not Amended

Owner's Amended Responsibilities:

_____

_____

_____

Contractor's Amended Responsibilities:

_____

_____

_____

_____

The following documents are attached to and made part of this Certificate:

_____

_____

_____

This Certificate does not constitute an acceptance of Work not in accordance with the Contract Documents nor is it a release of Contractor's obligation to complete the Work in accordance with the Contract Documents.

Executed by Engineer	Date
Accepted by Contractor	Date
Accepted by Owner	Date

SECTION 700

STANDARD GENERAL CONDITIONS

SECTION 700

STANDARD GENERAL CONDITIONS

TABLE OF CONTENTS

Page

Article 1 – Definitions and Terminology 1
1.01 Defined Terms 1
1.02 Terminology 6

Article 2 – Preliminary Matters 8
2.01 Delivery of Bonds and Evidence of Insurance 8
2.02 Copies of Documents 8
2.03 Commencement of Contract Times; Notice to Proceed 8
2.04 Starting the Work 8
2.05 Before Starting Construction 8
2.06 Preconstruction Conference; Designation of Authorized Representatives 9
2.07 Initial Acceptance of Schedules 9

Article 3 – Contract Documents: Intent, Amending, Reuse 10
3.01 Intent 10
3.02 Reference Standards 11
3.03 Reporting and Resolving Discrepancies 11
3.04 Amending and Supplementing Contract Documents 13
3.05 Reuse of Documents 13
3.06 Electronic Data 13

Article 4 – Availability of Lands; Subsurface and Physical Conditions; Hazardous Environmental Conditions; Reference Points 14
4.01 Availability of Lands 14
4.02 Subsurface and Physical Conditions 14
4.03 Differing Subsurface or Physical Conditions 16
4.04 Underground Facilities 17
4.05 Lines and Grades 18
4.06 Hazardous Environmental Condition at Site 19
4.07 Public Contract Code Section 7104 21

Article 5 – Bonds and Insurance 22
5.01 Performance, Payment, and Other Bonds 22
5.02 Licensed Sureties and Insurers 22
5.03 Certificates of Insurance 23
5.04 Contractor's Insurance 23
5.05 Blank 30
5.06 Blank 30
5.07 Blank 30
5.08 Blank 30
5.09 Acceptance of Bonds and Insurance; Option to Replace 30

5.10 Blank 31

Article 6 – Contractor's Responsibilities 31
6.01 Supervision and Superintendence 31
6.02 Labor; Working Hours 32
6.03 Services, Materials, and Equipment 32
6.04 Progress Schedule 33
6.05 Substitutes and "Or-Equals" 33
6.06 Concerning Subcontractors, Suppliers, and Others 36
6.07 Patent Fees and Royalties 39
6.08 Permits 39
6.09 Laws and Regulations 40
6.10 Taxes 41
6.11 Use of Site and Other Areas 41
6.12 Record Documents 42
6.13 Safety and Protection 42
6.14 Safety Representative 44
6.15 Hazard Communication Programs 44
6.16 Emergencies 44
6.17 Shop Drawings and Samples 44
6.18 Continuing the Work 47
6.19 Contractor's General Warranty and Correction Guarantee 47
6.20 Indemnification 48
6.21 Delegation of Professional Design Services 49
6.22 Daily Reports 50
6.23 Payroll Record of Wages Paid 51

Article 7 – Other Work at the Site 51
7.01 Related Work at Site 51
7.02 Coordination 52
7.03 Legal Relationships 52
7.04 Claims Between Contractors 53

Article 8 – Owner's Responsibilities 53
8.01 Communications to Contractor 53
8.02 Replacement of Engineer 53
8.03 Furnish Data 54
8.04 Pay When Due 54
8.05 Lands and Easements; Reports and Tests 54
8.06 Insurance 54
8.07 Change Orders 54
8.08 Inspections, Tests, and Approvals 54
8.09 Limitations on Owner's Responsibilities 54
8.10 Undisclosed Hazardous Environmental Condition 54
8.11 Blank 55
8.12 Compliance with Safety Program 55

Article 9 – Engineer's Status During Construction 55
9.01 Owner's Representative 55

9.02 Visits to Site 55
9.03 Project Representative 55
9.04 Authorized Variations in Work 56
9.05 Rejecting Defective Work 56
9.06 Shop Drawings, Change Orders and Payments 56
9.07 Determinations for Unit Price Work 57
9.08 Decisions on Requirements of Contract Documents and Acceptability of Work 57
9.09 Limitations on Engineer's Authority and Responsibilities 57
9.10 Compliance with Safety Program 58
9.11 Lines and Grades 58

Article 10 – Changes in the Work; Claims 58
10.01 Authorized Changes in the Work 58
10.02 Unauthorized Changes in the Work 59
10.03 Execution of Change Orders 59
10.04 Notification to Surety 60
10.05 Claims 60
10.06 Other Requirements Relating to Claims 68

Article 11 – Cost of the Work; Allowances; Unit Price Work 69
11.01 Cost of the Work 69
11.02 Allowances 73
11.03 Unit Price Work 74
11.04 Extra Work 74

Article 12 – Change of Contract Price; Change of Contract Times 75
12.01 Change of Contract Price 75
12.02 Change of Contract Times 77
12.03 Delays 77

Article 13 – Tests and Inspections; Correction, Removal or Acceptance of Defective Work 78
13.01 Notice of Defects 78
13.02 Access to Work 79
13.03 Tests and Inspections 79
13.04 Uncovering Work 80
13.05 Owner May Stop the Work 80
13.06 Correction or Removal of Defective Work 80
13.07 Correction Period 81
13.08 Acceptance of Defective Work 82
13.09 Owner May Correct Defective Work 82

Article 14 – Payments to Contractor and Completion 83
14.01 Schedule of Values 83
14.02 Progress Payments 83
14.03 Contractor's Warranty of Title 89
14.04 Substantial Completion 89
14.05 Partial Utilization 90
14.06 Final Inspection 91
14.07 Final Payment 91

14.08 Final Completion Delayed 92
14.09 Waiver of Claims 92

Article 15 – Suspension of Work and Termination 93
15.01 Owner May Suspend Work 93
15.02 Owner May Terminate for Cause 93
15.03 Owner's Termination For Convenience 95

Article 16 – Dispute Resolution 96
16.01 Methods and Procedures 96

Article 17 – Miscellaneous 96
17.01 Giving Notice 96
17.02 Computation of Times 96
17.03 Cumulative Remedies 96
17.04 Survival of Obligations 97
17.05 Controlling Law 97
17.06 Headings 97

Article 18 – Federal Requirements 97
18.01 Agency Not a part 98
18.02 Contract Approval 97
18.03 Conflict of Interest 97
18.04 Gratuities 98
18.05 Audit and Access to Records 98
18.06 Small, Minority, and Women's Businesses 99
18.07 Anti-Kickback 98
18.08 Clean Air and Pollution Control Acts 99
18.09 State Energy Policy 99
18.10 Equal Opportunity Requirements 99
18.11 Restrictions on Lobbying 100
18.12 Environmental Requirements 100

Article 19 – Project Sign 101

Article 20 – Additional California State Requirements 101

ARTICLE 1 – DEFINITIONS AND TERMINOLOGY

1.01 *Defined Terms*

A. Wherever used in the Bidding Requirements or Contract Documents and printed with initial capital letters or in all capital letters, the terms listed below will have the meanings indicated which are applicable to both the singular and plural thereof. In addition to terms specifically defined, terms with initial capital letters or in all capital letters in the Contract Documents include references to identified articles and paragraphs, and the titles of other documents or forms. The use of the term "Paragraph" with initial capital letters is used to connote a sub-article of one of the 21 articles herein, and includes all of the paragraphs falling under that sub-article (including sub-articles that are subsidiary to that sub-article).

1. *Addenda*—Written or graphic instruments issued prior to the opening of Bids which clarify, correct, or change the Bidding Requirements or the proposed Contract Documents.

2. *Agency*— The Project is financed in part by USDA Rural Utilities Service pursuant to the Consolidated Farm and Rural Development Act (7 USC Section 19212 et seq.). The Rural Utilities Service programs are administered through the USDA Rural Development offices, therefore, the Agency for these documents is USDA Rural Development. The Agency is USDA Rural Development.

3. *Agreement*—The written instrument which is evidence of the agreement between Owner and Contractor covering the Work.

4. *Application for Payment*—The form acceptable to Engineer which is to be used by Contractor during the course of the Work in requesting progress or final payments and which is to be accompanied by such supporting documentation as is required by the Contract Documents.

   The Application for Payment form to be used on this Project is found in Section 00820. The Agency must approve all Applications for Payment before payment is made.

5. *Asbestos*—Any material that contains more than one percent asbestos and is friable or is releasing asbestos fibers into the air above current action levels established by the United States Occupational Safety and Health Administration.

6. *Bid*—The offer or proposal of a Bidder submitted on the prescribed form setting forth the prices for the Work to be performed.

7. *Bidder*—The individual or entity who submits a Bid directly to Owner.

8. *Bidding Documents*—The Bidding Requirements and the proposed Contract Documents (including all Addenda).

9. *Bidding Requirements*—The advertisement or invitation to bid, Instructions to Bidders, Bid security of acceptable form, if any, and the Bid Form with any supplements.

10. *Bilateral Change Order*—A document recommended by Engineer which is signed by Contractor and Owner and authorizes an addition, deletion, or revision in the Work or an adjustment in the Contract Price or the Contract Times, issued on or after the Effective Date of the Agreement.

    The Change Order form to be used for a Bilateral Change Order is found in Section 00830. Agency approval is required before Change Orders are effective.

11. *Change Order*—A document in the form of either a Bilateral Change Order or Unilateral Change Order that authorizes an addition, deletion, or revision in the Work or an adjustment in the Contract Price or the Contract Times, issued on or after the Effective Date of the Agreement.

    The Change Order form to be used for this Project is found in Section 00830. Agency approval is required before Change Orders are effective.

12. *Claim*—A demand or assertion by Contractor seeking an adjustment of Contract Price or Contract Times, or both, or other relief with respect to the terms of the Contract. A demand for money or services by a third party is not a Claim. A condition precedent to Contractor's right to make a Claim is Contractor's strict compliance with the requirements set forth in Paragraph 10.05.

13. *Contract*—The entire and integrated written agreement between the Owner and Contractor concerning the Work. The Contract supersedes prior negotiations, representations, or agreements, whether written or oral.

14. *Contract Documents*—Those items so designated in the Agreement. Only printed or hard copies of the items listed in the Agreement are Contract Documents. Approved Shop Drawings, other Contractor submittals, and the reports and drawings of subsurface and physical conditions are not Contract Documents.

15. *Contract Price*—The moneys payable by Owner to Contractor for completion of the Work in accordance with the Contract Documents as stated in the Agreement (subject to the provisions of Paragraph 11.02 in the case of Allowances and Paragraph 11.03 in the case of Unit Price Work).

16. *Contract Times*—The number of days or the dates stated in the Agreement to: (i) achieve Milestones, if any; (ii) achieve Substantial Completion; and (iii) complete the Work so that it is ready for final payment as evidenced by Engineer's written recommendation of final payment.

17. *Contractor*—The individual or entity with whom Owner has entered into the Agreement.

18. *Cost of the Work*—See Paragraph 11.01 for definition.

19. *Designer*— The individual or entity named as such in the Agreement.

20. *Drawings*—That part of the Contract Documents prepared or approved by Designer which graphically shows the scope, extent, and character of the Work to be performed by Contractor. Shop Drawings and other Contractor submittals are not Drawings as so defined.

21. *Effective Date of the Agreement*—The date indicated in the Agreement on which it becomes effective, but if no such date is indicated, it means the date on which the Agreement is signed and delivered by the last of the two parties to sign and deliver.

22. *Engineer*—The individual or entity named as such in the Agreement.

23. *Field Order*—A written order issued by Engineer which requires minor changes in the Work but which does not involve a change in the Contract Price or the Contract Times.

24. *General Requirements*—Sections of Division 1 of the Specifications.

25. *Hazardous Environmental Condition*—The presence at the Site of Asbestos, PCBs, Petroleum, Hazardous Waste, military munitions (including unexploded ordnance), or Radioactive Material in such quantities or circumstances that may present a substantial danger to persons or property exposed thereto.

26. *Hazardous Waste*—The term Hazardous Waste shall have the meaning provided in Section 1004 of the Solid Waste Disposal Act (42 USC Section 6903) as amended from time to time.

27. *Laws and Regulations; Laws or Regulations*—Any and all applicable laws, rules, regulations, ordinances, codes, and orders of any and all governmental bodies, agencies, authorities, and courts having jurisdiction, or purporting to have jurisdiction.

28. *Liens*—Charges, security interests, stop notices, or encumbrances upon Project funds, real property, or personal property.

29. *Milestone*—A principal event specified in the Contract Documents relating to an intermediate completion date or time prior to Substantial Completion of all the Work.

30. *Notice of Award*—The written notice by Owner to the Successful Bidder stating that upon timely compliance by the Successful Bidder with the conditions precedent listed therein, Owner will sign and deliver the Agreement to the successful Bidder, if Owner decides to proceed with the Work. The Notice of Award alone shall not create remedies for any Work performed under the Agreement or Contract Documents. Until Contractor receives a Notice to Proceed from Owner, Contractor shall not proceed with the Work and has no remedy against Owner for performing any Work related to the Project before receiving that notice.

31. *Notice to Proceed*—A written notice given by Owner to Contractor fixing the date on which the Contract Times will commence to run and on which Contractor shall start to perform the Work under the Contract Documents.

32. *Owner*—The individual or entity with whom Contractor has entered into the Agreement and for whom the Work is to be performed.

    The Owner is the County of San Luis Obispo.

33. *PCBs*—Polychlorinated biphenyls.

34. *Petroleum*—Petroleum, including crude oil or any fraction thereof which is liquid at standard conditions of temperature and pressure (60 degrees Fahrenheit and 14.7 pounds per square inch absolute), such as oil, petroleum, fuel oil, oil sludge, oil refuse, gasoline, kerosene, and oil mixed with other non-Hazardous Waste and crude oils.

35. *Progress Schedule*—A schedule, prepared and maintained by Contractor, describing the sequence and duration of the activities comprising the Contractor's plan to accomplish the Work within the Contract Times.

36. *Project*—The total construction of which the Work to be performed under the Contract Documents may be the whole, or a part.

37. *Project Manual*—The bound documentary information prepared for bidding and constructing the Work. A listing of the contents of the Project Manual, which may be bound in one or more volumes, is contained in the table(s) of contents.

38. *Radioactive Material*—Source, special nuclear, or byproduct material as defined by the Atomic Energy Act of 1954 (42 USC Section 2011 et seq.) as amended from time to time.

39. *Resident Project Representative*—The authorized representative of Engineer who may be assigned to the Site or any part thereof.

40. *Samples*—Physical examples of materials, equipment, or workmanship that are representative of some portion of the Work and which establish the standards by which such portion of the Work will be judged.

41. *Schedule of Submittals*—A schedule, prepared and maintained by Contractor, of required submittals and the time requirements to support scheduled performance of related construction activities.

42. *Schedule of Values*—A schedule, prepared and maintained by Contractor, allocating portions of the Contract Price to various portions of the Work and used as the basis for reviewing Contractor's Applications for Payment.

43. *Shop Drawings*—All drawings, diagrams, illustrations, schedules, and other data or information which are specifically prepared or assembled by or for Contractor and submitted by Contractor to illustrate some portion of the Work.

44. *Site*—Lands or areas indicated in the Contract Documents as being furnished by Owner upon which the Work is to be performed, including rights-of-way and easements for access thereto, and such other lands furnished by Owner which are designated for the use of Contractor.

45. *Specifications*—That part of the Contract Documents consisting of written requirements for materials, equipment, systems, standards and workmanship as applied to the Work, and certain administrative requirements and procedural matters applicable thereto.

46. *Subcontractor*—An individual or entity having a direct contract with Contractor or with any other Subcontractor for the performance of a part of the Work at the Site.

47. *Substantial Completion*—The time at which the Work (or a specified part thereof) has progressed to the point where, in the opinion of Engineer: (1) the Work (or a specified part thereof) is sufficiently complete, in accordance with the Contract Documents, so that the Work (or a specified part thereof) can be utilized for the purposes for which it is intended ; (2) a temporary certificate of occupancy or equivalent inspector sign-off has been issued by the governing authority (3) all systems included in the Work are operational, as designed, installed and tested; and (4) Contractor has submitted a written certification that all remaining Work shall be completed within a specified number of days approved by the Engineer following the Date of Substantial Completion. The terms "substantially complete" and "substantially completed" as applied to all or part of the Work refer to Substantial Completion thereof.

48. *Successful Bidder*—The Bidder submitting a responsive Bid to whom Owner makes an award.

49. *Supplier*—A manufacturer, fabricator, supplier, distributor, materialman, or vendor having a direct contract with Contractor or with any Subcontractor to furnish materials or equipment to be incorporated in the Work by Contractor or Subcontractor.

50. *Underground Facilities*—All underground pipelines, conduits, ducts, cables, wires, manholes, vaults, tanks, tunnels, or other such facilities or attachments, and any encasements containing such facilities, including those that convey electricity, gases, steam, liquid petroleum products, telephone or other communications, cable television, water, wastewater, storm water, other liquids or chemicals, or traffic or other control systems.

51. *Unilateral Change Order*—A document signed by the Owner that authorizes an adjustment to the Contract Price and/or Contract Times. Whenever an adjustment in Contract Price and/or Contract Times is warranted under the Contract Documents, but the Owner and Contractor cannot agree to the amount of adjustment, if any, that should be allowed to the Contract Price and/or Contract Times the Owner may issue a Unilateral Change Order stating the adjustment, if any, that is being made to the Contract Price and/or Contract Times. If any unilateral adjustment to the Contract Price and/or Contract Times is not acceptable to Contractor for any reason,

including any argument that an adjustment to the Contract Price and/or Contract Times was not warranted by the Contract Documents, the Contractor's exclusive remedy is to follow the Claim process set forth in Paragraph 10.05. A Unilateral Change Order may be jointly signed by the Engineer, but the Engineer's signature is not required.

The Change Order form to be used for a Unilateral Change Order is found in Section 00830. Notwithstanding anything to the contrary set forth in Section 00830, neither the approval nor signature of the Contractor is required in order for a Unilateral Change Order to be effective. Agency approval is required before Change Orders are effective.

52. *Unit Price Work*—Work to be paid for on the basis of unit prices.

53. *Work*—The entire construction or the various separately identifiable parts thereof required to be provided under the Contract Documents. Work includes and is the result of performing or providing all labor, services, and documentation necessary to produce such construction, and furnishing, installing, and incorporating all materials and equipment into such construction, all as required by the Contract Documents.

54. *Work Change Directive*—A written statement to Contractor issued on or after the Effective Date of the Agreement and signed by Owner and recommended by Engineer ordering an addition, deletion, or revision in the Work, or responding to differing or unforeseen subsurface or physical conditions under which the Work is to be performed or to emergencies. A Work Change Directive will not change the Contract Price or the Contract Times but is evidence that the parties expect that the change ordered or documented by a Work Change Directive will be incorporated in a subsequently issued Change Order following negotiations by the parties as to its effect, if any, on the Contract Price or Contract Times.

1.02 *Terminology*

A. The words and terms discussed in Paragraph 1.02.B through G are not defined but, when used in the Bidding Requirements or Contract Documents, have the indicated meaning.

B. *Intent of Certain Terms or Adjectives:*

1. The Contract Documents include the terms “as allowed,” “as approved,” “as ordered,” “as directed” or terms of like effect or import to authorize an exercise of professional judgment by Engineer. In addition, the adjectives “reasonable,” “suitable,” “acceptable,” “proper,” “satisfactory,” or adjectives of like effect or import are used to describe an action or determination of Engineer as to the Work. It is intended that such exercise of professional judgment, action, or determination will be solely to evaluate, in general, the Work for compliance with the information in the Contract Documents and with the design concept of the Project as a functioning whole as shown or indicated in the Contract Documents (unless there is a specific statement indicating otherwise). The use of any such term or adjective is not intended to and shall not be effective to assign to Engineer any duty or authority

to supervise or direct the performance of the Work, or any duty or authority to undertake responsibility contrary to the provisions of Paragraph 9.09 or any other provision of the Contract Documents.

C. *Day:*

1. The word "day" means a calendar day of 24 hours measured from midnight to the next midnight.

D. *Defective:*

1. The word "defective," when modifying the word "Work," refers to Work that is unsatisfactory, faulty, or deficient in that it:

   a. does not conform to the Contract Documents; or

   b. does not meet the requirements of any applicable inspection, reference standard, test, or approval referred to in the Contract Documents; or

   c. has been damaged prior to Engineer's recommendation of final payment (unless responsibility for the protection thereof has been assumed by Owner at Substantial Completion in accordance with Paragraph 14.04 or 14.05).

E. *Furnish, Install, Perform, Provide:*

1. The word "furnish," when used in connection with services, materials, or equipment, shall mean to supply and deliver said services, materials, or equipment to the Site (or some other specified location) ready for use or installation and in usable or operable condition.

2. The word "install," when used in connection with services, materials, or equipment, shall mean to put into use or place in final position said services, materials, or equipment complete and ready for intended use.

3. The words "perform" or "provide," when used in connection with services, materials, or equipment, shall mean to furnish and install said services, materials, or equipment complete and ready for intended use.

4. When "furnish," "install," "perform," or "provide" is not used in connection with services, materials, or equipment in a context clearly requiring an obligation of Contractor, "provide" is implied.

F. Unless stated otherwise in the Contract Documents, words or phrases that have a well-known technical or construction industry or trade meaning are used in the Contract Documents in accordance with such recognized meaning.

G. *Employ:*

1. The word "employ" when used in the context of Contractor's hiring or use of a Subcontractor is not intended to suggest that the relationship between Contractor and Subcontractor is an employer-employee relationship.

ARTICLE 2 – PRELIMINARY MATTERS

2.01 *Delivery of Bonds and Evidence of Insurance*

A. When Contractor delivers the executed counterparts of the Agreement to Owner, Contractor shall also deliver to Owner such bonds and certificates of insurance as Contractor may be required to furnish.

B. *Blank*

2.02 *Copies of Documents*

A. Owner shall furnish to Contractor up to 4 printed or hard copies of the Drawings and Project Manual. Additional copies will be furnished upon request at the cost of reproduction.

2.03 *Commencement of Contract Times; Notice to Proceed*

A. The Contract Times will commence as set forth in the Notice to Proceed. In no event will Contractor have any remedies for Work performed on the Project until the Notice to Proceed is given to Contractor.

2.04 *Starting the Work*

A. Contractor shall start to perform the Work on the date when the Contract Times commence to run. No Work shall be done at the Site prior to the date on which the Contract Times commence to run.

2.05 *Before Starting Construction*

A. *Preliminary Schedules:* Within 14 days after the Effective Date of the Agreement (unless otherwise specified in the General Requirements), Contractor shall submit to Engineer for timely review:

1. a preliminary Progress Schedule indicating the times (numbers of days or dates) for starting and completing the various stages of the Work, including any Milestones specified in the Contract Documents. The Progress Schedule, in a detailed precedence-style critical path method (CPM) or primavera type format satisfactory to Owner and Engineer, shall (1) provide a graphic representation of all activities and events that will occur during the performance of the Work; (2) identify each phase of construction and occupancy; and (3) set forth milestone dates that are significant to ensure the timely and orderly completion of the Work in accordance with the requirements of the Contract Documents.;

2. a preliminary Schedule of Submittals; and

3. a preliminary Schedule of Values for all of the Work which includes quantities and prices of items which when added together equal the Contract Price and subdivides the Work into component parts in sufficient detail to serve as the basis for progress

payments during performance of the Work. Such prices will include an appropriate amount of overhead and profit applicable to each item of Work.

4. a preliminary Staking Request Schedule for the initial thirty (30) days of Work.

B. *Recycling Plan*: Within 10 days after the Effective Date of the Agreement (unless otherwise specified in the General Requirements), Contractor shall submit Recycling Plan to Owner for timely review, as specified in the Contact Documents.

2.06 *Preconstruction Conference; Designation of Authorized Representatives*

A. Before any Work at the Site is started, a conference attended by Owner, Contractor, Engineer, Designer, and others as appropriate will be held to establish a working understanding among the parties as to the Work and to discuss the schedules referred to in Paragraph 2.05.A, procedures for handling Shop Drawings and other submittals, processing Applications for Payment, and maintaining required records.

B. At this conference Owner and Contractor each shall designate, in writing, a specific individual to act as its authorized representative with respect to the services and responsibilities under the Contract. Such individuals shall have the authority to transmit instructions, receive information, render decisions relative to the Contract, and otherwise act on behalf of each respective party.

1. Generally, Contractor shall communicate with Engineer, or Engineer's designated representative under Paragraph 9.03, as Engineer shall specify, concerning matters affecting Engineer or Owner. In the event that Contractor believes he/she cannot physically locate or deliver necessary communications to Engineer, or Engineer's designated representative, as specific circumstances require those communications to be received by Engineer, Contractor may transmit those communications to Owner with a copy to Engineer, or Engineer's designated representative, and shall include in the communication an explanation why Contractor is sending the communication to Owner as well as Engineer, or Engineer's representatives.

2.07 *Initial Acceptance of Schedules*

A. Contractor shall be responsible for arranging a meeting to be held at least 5 days before submission of the first Application for Payment, where Contractor, Engineer, Owner, and others as appropriate, shall review for acceptability to Engineer and Owner the schedules submitted in accordance with Paragraph 2.05.A. Contractor shall have an additional 10 days to make corrections and adjustments and to complete and resubmit the schedules. No progress payment shall be made to Contractor until Contractor submits schedules that are accepted by Engineer and Owner in writing. Such acceptance shall only mean that the schedule satisfies the acceptability standard set forth below, and shall not constitute any type of approval or ratification by Engineer or Owner as to any means or methods of Work chosen by Contractor (which Contractor shall be solely responsible for).

1. The Progress Schedule will be acceptable to Engineer and Owner if it provides an orderly progression of the Work to completion within the Contract Times, in compliance with the requirements of Paragraph 2.05.A.1. If not accepted, the

Progress Schedule shall be promptly revised by Contractor in accordance with the recommendations of Owner and Engineer and resubmitted for acceptance. Upon review and acceptance by Owner and Engineer, the Progress Schedule shall be deemed to be part of the Contract Documents and attached to the Agreement. Such acceptance must be in a writing signed by Owner and Engineer that expressly states that the Progress Schedule is deemed part of the Contract Documents and an attachment to the Agreement. Such acceptance will not impose on Engineer or Owner any responsibility for the Progress Schedule, for sequencing, scheduling, or progress of the Work, nor interfere with or relieve Contractor from Contractor's full responsibility therefor.

2. Contractor's Schedule of Submittals will be acceptable to Engineer and Owner if it provides a workable arrangement for reviewing and processing the required submittals.

3. Contractor's Schedule of Values will be acceptable to Engineer and Owner as to form and substance if it provides a reasonable allocation of the Contract Price to component parts of the Work.

4. Contractor's Staking Request Schedule will be acceptable to Engineer and Owner if it correlates with the Progress Schedule.

ARTICLE 3 – CONTRACT DOCUMENTS: INTENT, AMENDING, REUSE

3.01 *Intent*

A. The Contract Documents are complementary; what is required by one is as binding as if required by all.

B. It is the intent of the Contract Documents to describe a functionally complete project (or part thereof) to be constructed in accordance with the Contract Documents. Any labor, documentation, services, materials, or equipment that reasonably may be inferred from the Contract Documents or from prevailing custom or trade usage as being required to produce the indicated result will be provided whether or not specifically called for, at no additional cost to Owner.

Contractor shall be responsible for verifying at the Site the accuracy of all grades, elevations, dimensions, locations and field measurements in any Drawings, Specifications, or any other Contract Documents. In all cases of the interconnection of its Work with existing or other Work, Contractor shall verify at the site all dimensions relating to such existing or other Work. Any additional work caused by Contractor's failure to verify all such grades, elevations, dimensions, locations, or field measurements shall be promptly rectified by Contractor without any increase in Contract Price or Contract Times. Nothing in this paragraph is intended to require the Contractor to assume responsibility for the completeness and accuracy of any Drawings, Specifications, or other Contract Documents. This paragraph simply sets forth Contractor's obligation to verify data before incurring costs or delays that could have been mitigated by such verification.

C. Clarifications and interpretations of the Contract Documents shall be issued by Engineer.

D. Contractor shall keep at the Work site a copy of the Plans and Specifications to which Engineer shall have access at all times.

3.02 *Reference Standards*

A. Standards, Specifications, Codes, Laws, and Regulations

1. Reference to standards, specifications, manuals, or codes of any technical society, organization, or association, or to Laws or Regulations, whether such reference be specific or by implication, shall mean the standard, specification, manual, code, or Laws or Regulations in effect at the time of opening of Bids, except as may be otherwise specifically stated in the Contract Documents.

2. No provision of any such standard, specification, manual, or code, or any instruction of a Supplier, shall be effective to change the duties or responsibilities of Owner, Contractor, Designer, or Engineer, or any of their subcontractors, consultants, agents, or employees, from those set forth in the Contract Documents. No such provision or instruction shall be effective to assign to Owner, Designer, Engineer, or any of their officers, directors, members, partners, employees, agents, consultants, or subcontractors, any duty or authority to supervise or direct the performance of the Work or any duty or authority to undertake responsibility inconsistent with the provisions of the Contract Documents.

3.03 *Reporting and Resolving Discrepancies*

A. *Reporting Discrepancies:*

1. *Contractor's Review of Contract Documents Before Starting Work*: Before undertaking each part of the Work, Contractor shall carefully study and compare the Contract Documents and check and verify pertinent figures therein and all applicable field measurements. Contractor shall promptly report in writing to Engineer any conflict, error, ambiguity, or discrepancy which Contractor discovers, or has actual knowledge of, and shall obtain a written interpretation or clarification from Engineer before proceeding with any Work affected thereby.

2. *Contractor's Review of Contract Documents During Performance of Work*: If, either before or during the performance of the Work, Contractor discovers any conflict, error, ambiguity, or discrepancy within the Contract Documents, or between the Contract Documents and (a) any applicable Law or Regulation , (b) any standard, specification, manual, or code, or (c) any instruction of any Supplier, then Contractor shall promptly report it to Engineer in writing. Contractor shall not proceed with the Work affected thereby (except in an emergency as required by Paragraph 6.16.A) until an amendment or supplement to the Contract Documents has been issued by one of the methods indicated in Paragraph 3.04.

3. Contractor shall not be liable to Owner or Engineer for Contractor's failure to report any conflict, error, ambiguity, or discrepancy in the Contract Documents unless

Contractor had actual knowledge thereof, or should have had such knowledge if it had acted in accordance with the provisions of the Contract Documents.

B. Resolving Discrepancies:

1. Except as may be otherwise specifically stated in the Contract Documents, the provisions of the Contract Documents shall take precedence in resolving any conflict, error, ambiguity, or discrepancy between the provisions of the Contract Documents and:

   a. the provisions of any standard, specification, manual, or code, or the instruction of any Supplier (whether or not specifically incorporated by reference in the Contract Documents); or

   b. the provisions of any Laws or Regulations applicable to the performance of the Work (unless such an interpretation of the provisions of the Contract Documents would result in violation of such Law or Regulation).

C. *Order of Precedence of Contract Documents:*

1. In the event of conflict between any of the Contract Documents, the provision placing a more stringent requirement on the Contractor shall prevail. The Contractor shall provide the better quality or greater quantity of Work and/or materials unless otherwise directed by Owner in writing. In the event none of the Contract Documents place a more stringent requirement or greater burden on the Contractor, the controlling provision shall be that which is found in the document with higher precedence. Nothing herein shall relieve the Contractor of its obligation to notify the Owner of any inconsistencies in the documents.

2. In the event of conflicts or discrepancies among the Contract Documents, interpretations will be based on the following order of precedence:

   a. Change Orders and Work Change Directives issued after execution of the Agreement in reverse chronological order (i.e. most recent first);

   b. The Owner-Contractor Agreement, including all attachments and Addenda with later Addenda having priority over earlier Addenda;

   c. General Conditions

   d. Specifications

   e. Drawings (Figures govern over scaled dimensions, Detail drawings govern over general drawings, Addenda/Change Order drawings govern over Contract Documents, Contract Drawings govern over Standard Plans);

   f. Bidding Requirements;

   g. Reference Specifications; and

3.04 *Amending and Supplementing Contract Documents*

A. The Contract Documents may be amended to provide for additions, deletions, and revisions in the Work or to modify the terms and conditions thereof by either a Change Order or a Work Change Directive. Any amendment to adjust either the Contract Times or the Contract Price shall be effective only if and when it is in writing and executed as a written Change Order.

Any amendment to adjust either the Contract Times or the Contract Price shall be effective only if and when it is in writing and executed as a written Change Order.

B. The requirements of the Contract Documents may be supplemented, and minor variations and deviations in the Work may be authorized, by one or more of the following ways:

1. A Field Order;

2. Engineer's approval of a Shop Drawing or Sample (subject to the provisions of Paragraph 6.17.D.3); or

3. Engineer's written interpretation or clarification.

No supplementation, variations, or deviations in the Work arising from any of the methods set forth in Paragraph 3.04.B shall, per se, adjust the Contract Price or Contract Times.

3.05 *Reuse of Documents*

A. Contractor and any Subcontractor or Supplier shall not:

1. have or acquire any title to or ownership rights in any of the Drawings, Specifications, or other documents (or copies of any thereof) prepared by or bearing the seal of Designer or its consultants; or

2. reuse any such Drawings, Specifications, other documents, or copies thereof on extensions of the Project or any other project without written consent of Owner and Designer and specific written verification or adaptation by Designer.

B. The prohibitions of this Paragraph 3.05 will survive final payment, or termination of the Contract. Nothing herein shall preclude Contractor from retaining copies of the Contract Documents for record purposes.

3.06 *Electronic Data*

A. Unless otherwise stated in the Specifications, the data furnished by Owner or Engineer to Contractor, or by Contractor to Owner or Engineer, that may be relied upon are limited to the printed copies (also known as hard copies). Files in electronic media format of text, data, graphics, or other types are furnished only for the convenience of the receiving party. Any conclusion or information obtained or derived from such

electronic files will be at the user's sole risk. If there is a discrepancy between the electronic files and the hard copies, the hard copies govern.

B. *Blank*

C. When transferring documents in electronic media format, the transferring party makes no representations as to long term compatibility, usability, or readability of documents resulting from the use of software application packages, operating systems, or computer hardware differing from those used by the data's creator.

ARTICLE 4 – AVAILABILITY OF LANDS; SUBSURFACE AND PHYSICAL CONDITIONS; HAZARDOUS ENVIRONMENTAL CONDITIONS; REFERENCE POINTS

4.01 *Availability of Lands*

A. Owner shall furnish the Site. Owner shall notify Contractor of any encumbrances or restrictions not of general application but specifically related to use of the Site with which Contractor must comply in performing the Work. Owner will obtain in a timely manner and pay for easements for permanent structures or permanent changes in existing facilities. If Contractor believes it is entitled to an adjustment in Contract Price and/or Contract Time, or any other relief, as a result of any delay in Owner's furnishing the Site or a part thereof, Contractor's exclusive remedy is set forth in Paragraph 10.05.

B. Upon reasonable written request, Owner shall furnish Contractor with a current statement of record legal title and legal description of the lands upon which the Work is to be performed and Owner's interest therein as necessary for giving notice of or filing a mechanic's or construction lien against such lands in accordance with applicable Laws and Regulations.

C. Contractor shall provide for all additional lands and access thereto that may be required for temporary construction facilities or storage of materials and equipment.

4.02 *Subsurface and Physical Conditions*

A. *Reports and Drawings*

1. In the preparation of Drawings and Specifications, Designer relied upon the following reports of exploration and tests of subsurface conditions at the Site:

a. Not applicable

The reports itemized in this Paragraph 4.02.A are not part of the Contract Documents, but may be examined at the Department of Public Works and Transportation at 1050 Monterey Street, Room 207, County Government Center, San Luis Obispo, CA 93408, during regular business hours. Other than the limited reliance on "technical data" as provided in Paragraphs 4.02.B and 4.02.C below, Contractor is not entitled to rely upon any information in said reports, or any other information or data utilized by Designer in the preparation

of the Drawings and Specifications. The use of the term "technical data" refers only to the limited factual data included in the "Appendices" and "Attachments" that are attached to the end of the reports listed above in Paragraph 4.02.A.

Such reports shall not excuse Contractor from the duty to independently evaluate and satisfy themselves as to the Site conditions and limitations under which the Work is to be performed, including, without limitation, (1) the location, condition, layout, and nature of the Site and surrounding areas; (2) generally prevailing climatic conditions; (3) anticipated labor, supply, and costs; (4) availability and cost of materials, tools, equipment; and (5) other similar issues. Further, Owner assumes no responsibility or liability for the physical condition or safety of the Site or any improvement located on the Site. Except as set forth in Article 4, Contractor shall be solely responsible for providing a safe place for the performance of the Work. Owner shall not be required to make adjustments in either the Contract Price or Contract Times arising from a failure by Contractor or any Subcontractor to make a proper independent evaluation as to any Site conditions or limitations required in this Contract.

Any indicated elevation of any groundwater is simply that which existed on the date when soil boring data was determined. It is Contractor's responsibility to determine and allow for the elevation of groundwater that exists on the date(s) the Contractor is performing any Work related thereto. A difference in elevation between groundwater shown in soil boring data and groundwater actually encountered during Work will not be considered as a basis for an increase in Contract Price and/or Contract Time.

Any additional subsurface exploration shall be done by Contractor at its own expense.

2. No drawings of physical conditions in or relating to existing surface and subsurface structures (except Underground Facilities) which are at or contiguous to the Site are known to Owner.

B. *Limited Reliance by Contractor on Technical Data Authorized:* Contractor may rely on the "technical data" contained in such reports, but such reliance shall be limited to the accuracy of such data as of the date each respective soil boring identified in the report was made. Except for such reliance on such "technical data," Contractor may not rely upon or make any claim against Owner, Designer, or Engineer, or any of their officers, directors, members, partners, employees, agents, consultants, or subcontractors with respect to:

1. the completeness of such reports for Contractor's purposes, including, but not limited to, any aspects of the means, methods, techniques, sequences, and procedures of construction to be employed by Contractor, and safety precautions and programs incident thereto; or

2. other data, interpretations, opinions, and information contained in such reports; or

3. any Contractor interpretation of or conclusion drawn from any "technical data" or any such other data, interpretations, opinions, or information.

4.03 *Differing Subsurface or Physical Conditions*

A. *Notice:* If Contractor discovers, or could reasonably have discovered, that any subsurface or physical condition that is uncovered or revealed either:

1. is of such a nature as to establish that any "technical data" on which Contractor is entitled to rely as provided in Paragraph 4.02 is materially inaccurate; or

2. is of such a nature as to require a change in the Contract Documents; or

3. differs materially from that shown or indicated in the Contract Documents; or

4. is of an unusual nature, and differs materially from conditions ordinarily encountered and generally recognized as inherent in work of the character provided for in the Contract Documents;

then Contractor shall immediately, and in any event not more than 24 hours thereafter, and before further disturbing the subsurface or physical conditions or performing any Work in connection therewith (except in an emergency as required by Paragraph 6.16.A), notify Owner and Engineer in writing about such condition. Contractor shall not further disturb such condition or perform any Work in connection therewith (except as aforesaid) until receipt of written order to do so.

B. *Engineer's Review*: After receipt of written notice as required by Paragraph 4.03.A, Engineer will promptly review the pertinent condition, determine the necessity of Owner's obtaining additional exploration or tests with respect thereto, and advise Owner in writing (with a copy to Contractor) of Engineer's findings and conclusions.

C. *Possible Price and Times Adjustments:*

1. The Contract Price or the Contract Times, or both, will be equitably adjusted to the extent that the existence of such differing subsurface or physical condition causes an increase or decrease in Contractor's cost of, or time required for, performance of the Work; subject, however, to the following:

   a. such condition must meet any one or more of the categories described in Paragraph 4.03.A; and

   b. with respect to Work that is paid for on a unit price basis, any adjustment in Contract Price will be subject to the provisions of Paragraphs 9.07 and 11.03.

2. Contractor shall not be entitled to any adjustment in the Contract Price or Contract Times if:

   a. Contractor knew of the existence of such conditions at the time Contractor made a final commitment to Owner with respect to Contract Price and Contract Times by the submission of a Bid or becoming bound under a negotiated contract; or

   b. the existence of such condition could reasonably have been discovered or revealed as a result of any examination, investigation, exploration, test, or study

of the Site and contiguous areas required by the Bidding Requirements or Contract Documents to be conducted by or for Contractor prior to Contractor's making such final commitment; or

c. Contractor failed to give the written notice as required by Paragraph 4.03.A.

3. If Contractor believes it is entitled to an adjustment in Contract Price and/or Contract Time, or any other relief, Contractor's exclusive remedy is set forth in Paragraph 10.05. However, neither Owner or Engineer, or any of their officers, directors, members, partners, employees, agents, consultants, or subcontractors shall be liable to Contractor for any claims, costs, losses, or damages (including but not limited to all fees and charges of engineers, architects, attorneys, and other professionals and all court or arbitration or other dispute resolution costs) sustained by Contractor on or in connection with any other project or anticipated project.

4.04 *Underground Facilities*

A. *Shown or Indicated:* The information and data shown or indicated in the Contract Documents with respect to existing Underground Facilities at or contiguous to the Site is based on information and data furnished to Owner or Designer by the owners of such Underground Facilities, including Owner, or by others. Unless it is otherwise expressly provided in the Specifications:

1. Neither Owner nor Engineer nor Designer shall be responsible for the accuracy or completeness of any such information or data provided by others; and

2. the cost of all of the following will be included in the Contract Price, and Contractor shall have full responsibility for:

a. reviewing and checking all such information and data;

b. locating all Underground Facilities shown or indicated in the Contract Documents;

c. coordination of the Work with the owners of such Underground Facilities, including Owner, during construction; and

d. the safety and protection of all such Underground Facilities and repairing any damage thereto resulting from the Work.

B. *Not Shown or Indicated:*

1. If an Underground Facility is uncovered or revealed at or contiguous to the Site which was not shown or indicated, or not shown or indicated with reasonable accuracy in the Contract Documents, Contractor shall, immediately, or as soon as feasible, after becoming aware thereof and before further disturbing conditions affected thereby or performing any Work in connection therewith (except in an emergency as required by Paragraph 6.16.A), identify the owner of such Underground Facility and give written notice to that owner and to Owner and Engineer. Engineer will promptly review the Underground Facility and determine

the extent, if any, to which a change is required in the Contract Documents to reflect and document the consequences of the existence or location of the Underground Facility. During such time, Contractor shall be responsible for the safety and protection of such Underground Facility.

2. If Engineer concludes that a change in the Contract Documents is required, a Work Change Directive or a Change Order will be issued to reflect and document such consequences. An equitable adjustment may be made to the Contract Price or Contract Times, or both, to the extent that they are attributable to the existence or location of any Underground Facility that was not shown or indicated or not shown or indicated with reasonable accuracy in the Contract Documents and that Contractor did not know of and could not reasonably have discovered, or have been expected to be aware of or to have anticipated. If Contractor believes it is entitled to an adjustment in Contract Price and/or Contract Time, or any other relief, Contractor's exclusive remedy is set forth in Paragraph 10.05.

3. Notwithstanding the foregoing, nothing in this Contract requires Owner to show or indicate in the Contract Documents any Underground Facility that constitutes a service lateral or related appurtenance whenever the presence of such Underground Facility at the Site can be reasonably inferred from the presence of other visible facilities, such as buildings, meter and/or junction boxes, on or adjacent to the Site. Contractor is deemed to be aware of, and to have anticipated, any such Underground Facility.

4. The location of existing service lateral or related appurtenance are not shown on the Drawings. Where underground main distribution conduits such as water, gas, sewer, electric power, telephone, or cable television are shown on the Drawings, Contractor shall assume that every property parcel will be served by a service lateral or related appurtenance for each type of utility.

4.05 *Lines and Grades*

A. Stakes or marks will be set by Engineer in accordance with the “Construction Staking Guidelines,” set forth in Section 6 of Appendix A of these Contract Documents. The Contractor is responsible for assuring that all Work complies with the Contract Documents, and nothing in this Paragraph 4.05 or Section 6 of Appendix A diminishes or effects the Contractor’s responsibility for providing Work that is in full compliance with the Contract Documents.

B. When Contractor requires stakes or marks to be set, Contractor shall notify Engineer of the requirements in writing no less than 5 days in advance of starting operations that require their use. In the event that a staking operation is estimated to take more than 1 day to complete, add 1 day to the minimum 5 days advance notice.

C. If any vegetation needs to be cleared or grubbed, as determined by Engineer, before stakes or marks can be set, then Contractor shall clear the obstructing vegetation for the proper placement of stakes or marks prior to submittal of a staking request. Engineer and Contractor shall agree on the extent of vegetation removal necessary to prepare the Site for the setting of stakes or marks. Vegetation removal for the preparation of the

Site for the setting of stakes or marks shall be considered as included in the various items of work involved and no additional compensation will be allowed therefor. Contractor will not be entitled to any compensation for any perceived delay, nor entitled to an extension of time for any perceived delay without due cause for the period between when the Site is deemed cleared by Engineer and when the stakes or marks are set for use by Contractor.

D. Stakes and marks set by Engineer shall be carefully preserved by Contractor. If the stakes or marks are destroyed or damaged, the stakes and marks will be replaced or restored at Engineer's earliest convenience. Contractor will be charged for each stake or mark replaced or restored which in the judgment of Engineer had been carelessly or willfully destroyed or damaged by Contractor's operations. As indicated in the "Construction Staking Guidelines," restaking charges will be based on the current costs of survey personnel plus overhead. This charge will be deducted from any moneys due or to become due Contractor.

E. Pursuant to Section 8771(b) of the California Business and Professions Code, existing survey monuments that control the location of subdivisions, tracts, boundaries, roads, streets, or highways, or provide survey control that are within or adjacent to Contractor's operations, shall be located and referenced by or under the direction of a California Professional Land Surveyor or California Registered Civil Engineer authorized to practice land surveying prior to the time when any streets, highways, other rights-of-way, or easements are improved, constructed, reconstructed, maintained, resurfaced, or relocated. In the event that any existing survey monuments are disturbed in any way by Contractor's operations, the Contractor shall be responsible for resetting monuments in accordance with Section 8771(b) of the California Business and Professions Code, and a corner record or record of survey shall be prepared and filed with the County Surveyor prior to filing of the Notice of Completion for the Project. Full compensation for furnishing all labor, materials, tools, equipment, and incidentals, and for doing all the work involved in locating existing survey monuments by or under the direction of a California Professional Land Surveyor or California Registered Civil Engineer authorized to practice land surveying, resetting any disturbed survey monument and preparing and filing a corner record or record of survey, shall be considered as included in the Contract Price and no additional compensation will be allowed therefor.

4.06 *Hazardous Environmental Condition at Site*

A. No reports or drawings related to Hazardous Environmental Conditions at the Site are known to Owner.

Absence of such reports and drawings shall not excuse Contractor from the duty to independently evaluate and satisfy themselves as to the Site conditions and limitations under which the Work is to be performed, including the existence of Hazardous Environmental Conditions that a reasonable contractor would have discovered either from a reasonable evaluation of external Site conditions, or upon the further investigation a reasonable contractor would have performed based upon information obtained from such external Site evaluation or other sources.

B. *Blank*

C. Contractor must act reasonably and shall not be excused for carelessly failing to discover and locate any Hazardous Environmental Condition(s) at the Site that may present a substantial danger to persons or property exposed thereto in connection with the Work at the Site. Contractor is liable for any damages caused by any Hazardous Environmental Condition(s) that Contractor knew of, or by the exercise of reasonable efforts should have known of. Within 24 hours of the time when Contractor discovers any such Hazardous Environmental Condition(s), Contractor shall follow the procedures set forth in Paragraph 4.06.D.

D. If Contractor encounters a Hazardous Environmental Condition or if Contractor or anyone for whom Contractor is responsible creates a Hazardous Environmental Condition, Contractor shall immediately: (i) secure or otherwise isolate such condition; (ii) stop all Work in connection with such condition and in any area affected thereby (except in an emergency as required by Paragraph 6.16.A); and (iii) notify Owner and Engineer (and promptly thereafter confirm such notice in writing). Owner shall promptly consult with Engineer concerning the necessity for Owner to retain a qualified expert to evaluate such condition or take corrective action, if any. Promptly after consulting with Engineer, Owner shall take such actions as are necessary to permit Owner to timely obtain required permits and provide Contractor written notice regarding any special instructions or conditions on how to proceed with the Work in the affected area.

E. *Blank*

F. If after receipt of such written notice Contractor does not agree to resume such Work based on a reasonable belief it is unsafe, or does not agree to resume such Work under such special conditions, then Owner may order the portion of the Work that is in the area affected by such condition to be deleted from the Work. If Contractor believes it is entitled to an adjustment in Contract Price and/or Contract Time, or any other relief, Contractor's exclusive remedy is set forth in Paragraph 10.05. Owner may have such deleted portion of the Work performed by Owner’s own forces or others in accordance with Article 7.

G. *Blank*

H. To the fullest extent permitted by Laws and Regulations, Contractor shall indemnify and hold harmless Owner and Engineer, and the officers, directors, members, partners, employees, agents, consultants, and subcontractors of each and any of them from and against all claims, costs, losses, and damages (including but not limited to all fees and charges of engineers, architects, attorneys, and other professionals and all court or arbitration or other dispute resolution costs) arising out of or relating to a Hazardous Environmental Condition created by Contractor or by anyone for whom Contractor is responsible. Nothing in this Paragraph 4.06.H shall obligate Contractor to indemnify any individual or entity from and against the consequences of that individual’s or entity’s own negligence.

I. The provisions of Paragraphs 4.02, 4.03, and 4.04 do not apply to a Hazardous Environmental Condition uncovered or revealed at the Site.

4.07 *Public Contract Code Section 7104*

The provisions of Article 4 shall be interpreted and implemented in a manner consistent with Public Contract Code section 7104. Pursuant to Public Contract Code section 7104:

A. Contractor shall promptly, and in any event not more than 24 hours thereafter, and before the following conditions are disturbed, notify Owner and Engineer in writing of any:

   1. Material that Contractor believes may be material that is hazardous waste, as defined in Section 25117 of the Health and Safety Code, that is required to be removed to a Class I, Class II, or Class III disposal site in accordance with provisions of existing law.

   2. Subsurface or latent physical conditions at the Site differing from those indicated by information about the Site made available to Bidders prior to the deadline for submitting Bids.

   3. Unknown physical conditions at the Site of any unusual nature, different materially from those ordinarily encountered and generally recognized as inherent in work of the character provided for in the Contract.

B. Upon receiving Contractor's notification, Engineer, as Owner's authorized representative, shall promptly investigate the conditions on behalf of Owner and report the results of its investigation to Owner. If Owner finds that the conditions do materially differ, or do involve hazardous waste, and that the conditions cause an adjustment in Contract Price and/or Contract Time for performance of any part of the Work under the terms of the Contract, a Change Order shall be processed under the procedures described in the Contract.

C. In the event that a dispute arises between Owner and Contractor whether the conditions materially differ, or involve hazardous waste, or cause a decrease or increase in Contractor's cost of, or time required for, performance of any part of the Work under the terms of the Contract, Contractor shall not be excused from any scheduled completion date provided for by the Contract, but shall proceed with all Work to be performed under the Contract. In such event, Contractor retains the right to submit a Claim therefor pursuant to the provisions of Article 10.

D. The provisions of this Paragraph 4.07 are not intended to override or replace any other language of this Contract, including other language in Article 4, but simply supplements such other language. All of the other provisions of this Contract (including Article 4) remain in full force and effect, including those provisions relating to the same topics covered in this Paragraph 4.07, so long as each such provision does not violate Public Contract Code section 7104. If any court finds any provision(s) of this Contract to be in violation of section 7104, such provision(s) are hereby deemed severed and removed from this Contract without affecting the validity of any of the remaining provisions of this Contract.

ARTICLE 5 – BONDS AND INSURANCE

5.01 *Performance, Payment, and Other Bonds*

A. Contractor shall furnish performance and payment bonds, each in an amount at least equal to the Contract Price as security for the faithful performance and payment of all of Contractor's obligations under the Contract Documents. All performance bonds shall remain in effect until Contractor performs all obligations under the Contract Documents including, but not limited to, insurance, indemnity and warranty obligations, which survive completion of the Work. Contractor shall also furnish such other bonds as are required by the Contract Documents.

B. All bonds shall be in the form prescribed by the Contract Documents except as provided otherwise by Laws or Regulations. All bonds shall be executed by a California "admitted surety insurer," as defined in California Code of Civil Procedure Section 995.120 and listed by the California Insurance Commissioner pursuant to Insurance Code Section 12070. Bonds issued by a California admitted surety listed in the latest versions of the U.S. Department of Treasury Circular 570 shall be deemed to be accepted unless specifically rejected by Owner. Bonds from a California admitted surety insurer not listed in Treasury Circular 570 must be accompanied by all of the documents enumerated in California Code of Civil Procedure Section 995.660(a). The attorney-in-fact who executes the required bonds on behalf of the surety shall affix thereto a certified and current copy of the power of attorney. The signatures shall be acknowledged by a Notary Public.

C. If the surety on any bond furnished by Contractor is declared bankrupt or becomes insolvent or its right to do business is terminated in any state where any part of the Project is located or it ceases to meet the requirements of Paragraph 5.01.B, Contractor shall promptly notify Owner and Engineer and shall, within 20 days after the event giving rise to such notification, provide another bond and surety, both of which shall comply with the requirements of Paragraphs 5.01.B and 5.02. No further payments shall be deemed due or will be made under the Contract until a new surety(ies) qualifies and is accepted by Owner.

D. If the Contractor or a Subcontractor disputes the correctness or validity or enforceability of any stop notice either may file with Owner a bond, on a form provided or approved by Owner executed by one or more California admitted surety insurers, in an amount equal to one hundred and twenty-five percent (125%) of the claim stated in the stop notice conditioned for the payment of any sum which the stop notice claimant may recover on the claim together with its costs of suit in the action. Upon Engineer's acceptance of such bond, Owner shall not withhold money from the Contractor on account of the stop notice. The surety(ies) upon the stop notice release bond shall be different than, and jointly and severally liable to the stop notice claimant with, the payment bond surety(ies).

5.02 *Licensed Sureties and Insurers*

A. All bonds and insurance required by the Contract Documents to be purchased and maintained by Owner or Contractor shall be obtained from surety or insurance

companies that are duly licensed or authorized in the jurisdiction in which the Project is located to issue bonds or insurance policies for the limits and coverages so required. Such surety and insurance companies shall also meet such additional requirements and qualifications as may be provided in Contract Documents.

B. Insurance shall be placed with insurers with an A.M. Best Guide, or similar rating service guide, rating of no less than **A-: VII.**

5.03 *Certificates of Insurance*

A. Contractor shall deliver to Owner, with copies to each additional insured and loss payee, certificates of insurance (and other evidence of insurance requested by Owner or any other additional insured) which Contractor is required to purchase and maintain. Upon Owner's request, Contractor shall provide complete copies of Contractor's and Subcontractors' insurance policies (including, but not limited to, the declarations page, form list and riders), endorsements or certificates required under the Contractor Documents and invoices for premiums.

B. *Blank*

C. Failure of Owner to demand such certificates or other evidence of Contractor's full compliance with these insurance requirements or failure of Owner to identify a deficiency in compliance from the evidence provided shall not be construed as a waiver of Contractor's obligation to maintain such insurance.

D. Owner does not represent that insurance coverage and limits established in this Contract necessarily will be adequate to protect Contractor.

E. The insurance and insurance limits required herein shall not be deemed as a limitation on Contractor's liability under the indemnities granted to Owner in the Contract Documents.

F. Each certificate and endorsement is to be signed by a person authorized by that insurer to bind coverage on its behalf. The certificate(s) and endorsement(s) must be in a form approved by Owner. All deductibles and self-insured retentions must be identified in the certificates. Any deductible or self-insured retention in excess of **$25,000** must be declared to and approved in writing by Owner prior to execution of the Agreement. The deductibles and retentions shall be considered a form of self-insurance.

5.04 *Contractor's Insurance*

A. Contractor shall purchase and maintain such insurance as is appropriate for the Work being performed and as will provide protection from claims set forth below which may arise out of or result from Contractor's performance of the Work and Contractor's other obligations under the Contract Documents, whether it is to be performed by Contractor, any Subcontractor or Supplier, or by anyone directly or indirectly employed by any of them to perform any of the Work, or by anyone for whose acts any of them may be liable:

1. claims under workers' compensation, disability benefits, and other similar employee benefit acts;

2. claims for damages because of bodily injury, occupational sickness or disease, or death of Contractor's employees;

3. claims for damages because of bodily injury, sickness or disease, or death of any person other than Contractor's employees;

4. claims for damages insured by reasonably available personal injury liability coverage which are sustained:

    a. by any person as a result of an offense directly or indirectly related to the employment of such person by Contractor, or

    b. by any other person for any other reason;

5. claims for damages, other than to the Work itself, because of injury to or destruction of tangible property wherever located, including loss of use resulting therefrom; and

6. claims for damages because of bodily injury or death of any person or property damage arising out of the ownership, maintenance or use of any motor vehicle.

7. Claims for bodily injury or property damage arising out of completed operations under the Contract, whether such operations are by the Contractor, its Subcontractors, or anyone directly or indirectly employed by any of them, or by anyone for whose acts any of them may be liable; and

8. Claims for third party liability and remediation costs stemming from pollution incidents that result from the operations of Contractor, its Subcontractors, Sub-subcontractors and suppliers.

B. The policies of insurance required by this Paragraph 5.04 shall:

1. with respect to insurance required by Paragraphs 5.04.A.3 through 5.04.A.6 inclusive, be written on an occurrence basis, include as additional insureds (subject to any customary exclusion regarding professional liability) Owner, Designer, and Engineer, all of whom shall be listed as additional insureds, and include coverage for the respective officers, directors, members, partners, employees, agents, consultants, and subcontractors of each and any of all such additional insureds, and the insurance afforded to these additional insureds shall provide primary coverage for all claims covered thereby;

2. include at least the specific coverages and be written for not less than the limits of liability provided in these General Conditions or required by Laws or Regulations, whichever is greater;

3. include contractual liability insurance covering Contractor's indemnity obligations under Paragraphs 6.11 and 6.20;

4. contain a provision or endorsement that the coverage afforded will not be canceled, materially changed or renewal refused until at least 30 days prior written notice has been given to Owner and Contractor and to each other additional insured (and the certificates of insurance furnished by the Contractor pursuant to Paragraph 5.03 will so provide);

5. remain in effect at least until final payment and at all times thereafter when Contractor may be correcting, removing, or replacing defective Work in accordance with Paragraph 13.07; and

6. include completed operations coverage:

   a. Such insurance shall remain in effect for five (5) years after final payment.

   b. Contractor shall furnish Owner and each other additional insured evidence satisfactory to Owner and any such additional insured of continuation of such insurance as a condition to final payment and thereafter upon the annual renewal of such coverage until the time within which such coverage must be maintained expires.

C. Contractor shall provide insurance in the types, and limits set forth below, with companies lawfully licensed and authorized to do business in the State of California, or otherwise under such forms and limits and with such companies approved by Owner, following Owner's examination of the company's financial, reinsurance, claims procedures and other data requested by the Owner. The Contractor's liability insurance required by Paragraph 5.04 of the General Conditions shall provide coverage with scope and limits not less than the following or greater when required by Laws and Regulations:

1. *Minimum Scope of Coverages*

   a. *Workers' Compensation and related coverages under Paragraphs 5.04.A.1 and A.2 of the General Conditions:* Contractor shall comply with the applicable sections of the California Labor Code concerning workers' compensation for injuries on the job. Compliance is accomplished in one of the following manners:

      i) Provide copy of permissive self-insurance certificate approved by the State of California; or

      ii) Secure and maintain in force a policy of workers' compensation insurance with State and applicable Federal statutory limits (e.g. Longshoremen's, if applicable) and Employer's Liability Insurance with a minimal limit of **$1,000,000** per accident; or

      iii) Provide a "waiver" form certifying that no employees subject to the California Labor Code's Workers' Compensation provision will be used in performance of this Contract.

In addition, all Worker's Compensation policies shall contain a waiver of subrogation in favor of the County of San Luis Obispo, its officials, board members, departments, agencies, directors, agents, employees, volunteers and representatives.

b. *Commercial General Liability under Paragraphs 5.04.A.3 through A.5 of the General Conditions:* Coverage shall be written on an Insurance Services Office (ISO) Commercial General Liability "occurrence" form CG 00 01 (10/01 or later edition) or equivalent form approved by Owner for coverage on an occurrence basis. The insurance shall cover liability, including, but not limited to, that arising from premises operations, stop gap liability, independent contractors, product liability and completed operations, personal injury, advertising injury, and liability assumed under an insured contract, and shall eliminate the exclusion with respect to property under the care, custody and control of Contractor. The policy shall be endorsed to provide the Aggregate per Project Endorsement ISO form CG 25 03 (11/85). Coverage shall contain no contractors' limitation or other endorsement limiting the scope of coverage for liability arising from explosion, collapse, or underground (x, c, u) property damage. Contractor shall maintain and provide Products/Completed Operations coverage to be maintained continuously for a minimum of five (5) years after final payment. The policy shall be scheduled as underlying insurance to the Umbrella or Excess Policy required herein.

c. *Business Automobile Liability under Paragraph 5.04.A.6 of the General Conditions*. Coverage shall include owned, hired, leased and non-owned vehicles, whether scheduled or not, written on Insurance Services Office (ISO) form CA 00 01 (12/93 or later edition) or a substitute form providing equivalent coverage. If necessary, the policy shall be endorsed to provide contractual liability coverage. The policy shall be scheduled as underlying insurance to the Umbrella or Excess Policy required herein.

d. *Excess or Umbrella Liability Insurance:* Coverage shall be at least as broad as any underlying coverage and shall be "following form" to the underlying coverage. Coverage shall be provided on a "pay on behalf" basis, with defense costs payable in addition to policy limits. There shall be no cross liability exclusion and no contractor's limitation endorsement. The policy shall have starting and ending dates concurrent with the underlying coverages. The Named Insured may determine the layering of primary and excess liability insurance provided that if such layering differs from that described here, the actual coverage program meets the minimum total required limits and complies with all other requirements listed in Paragraph 5.04. Contractor's excess or umbrella liability coverage shall be maintained continuously for a minimum of five (5) years after final payment.

e. *Contractor's Pollution Liability Insurance:* Coverage shall be provided on a form acceptable to Owner for liability caused by pollution conditions arising out of the operations of Contractor. Coverage shall apply to bodily injury, property damage (including loss of use of damaged property or of property that has not been physically injured), cleanup costs, and defense (including costs and

expenses incurred in the investigation, defense, or settlement of claims). All activities contemplated in this Contract shall be specifically scheduled on the policy as "covered operations." The policy shall provide coverage for the hauling of waste from the Project Site to the final disposal location, including non-owned disposal sites. Coverage shall be included on behalf of the insured for covered claims arising out of the actions of independent contractors. If the insured is using Subcontractors, the policy must include work performed "by or on behalf" of the insured. The policy shall specifically provide for a duty to defend on the part of the insurer. Such insurance shall include coverage for all operations, including completed operations and professional services. Such insurance shall not contain any exclusion for asbestos or lead. Contractor's pollution liability coverage shall be maintained continuously for a minimum of three (3) years after final payment.

2. *Minimum Limits of Insurance*. The limits of liability for the insurance required by Paragraph 5.04 of the General Conditions shall provide coverage for not less than the following amounts or greater where required by Laws and Regulations:

a. Workers' Compensation, and related coverages under Paragraphs 5.04.A.1 and A.2 of the General Conditions:

i.	State:	Statutory
ii.	Applicable Federal (e.g., Longshoreman's):	Statutory
iii.	Employer's Liability:	**$1,000,000** per accident for bodily injury or disease and **$1,000,000** per employee for bodily injury or disease**.**

b. Contractor's General Liability under Paragraphs 5.04.A.3 through 5.04.A.6 of the General Conditions which shall include completed operations and product liability coverages and eliminate the exclusion with respect to property under the care, custody and control of Contractor:

i.	General Aggregate:	**$2,000.000**
ii.	Products – Completed Operations Aggregate:	**$2,000,000**
iii.	Personal and Advertising Injury:	**$2,000,000**
iv.	Each Occurrence (Bodily Injury and Property Damage):	**$2,000,000**
v.	Property Damage liability insurance will provide Explosion, Collapse, and Under-ground coverages where applicable:	**$2,000,000**
vi.	Excess or Umbrella Liability:	
	• General Aggregate:	**$4,000,000**
	• Each Occurrence:	**$4,000,000**

c. Automobile Liability under Paragraph 5.04.A.6 of the General Conditions:

i.	Bodily Injury:	
	• Each Person:	**$1,000,000**
	• Each Accident:	**$1,000,000**
ii.	Property Damage:	
	• Each Accident	**$1,000,000**
	[or]	
i.	Combined Single Limit	**$1,000,000**

d. The Contractual Liability coverage required by Paragraph 5.04.B.3 of the General Conditions shall provide coverage for not less than the following amounts:

i. Bodily Injury:

- Each Person: **$2,000,000**
- Each Accident: **$2,000,000**

ii. Property Damage:

- Each Accident: **$2,000,000**
- Annual Aggregate: **$4,000,000**

e. Contractor's Pollution Liability Insurance:

i. Each Occurrence: **$2,000,000**

ii. General Aggregate: **$4,000,000**

3. *Additional Insured Endorsements*. The Contractor shall cause the insurance required by the Contract Documents (except professional liability and worker's compensation) to include the County of San Luis Obispo, its officials, board members, departments, agencies, directors, agents, employees, volunteers and representatives as additional insureds. The Engineer and Designer and the respective officers, directors, members, partners, employees, agents, consultants, and subcontractors of each shall also be included as additional insureds.

None of the insurance coverage required by Article 5 shall contain any special limitations on the scope of protection afforded to any additional insureds. All policies shall contain a waiver of subrogation in favor of the additional insureds. Coverage for such additional insureds does not extend to liability to the extent prohibited by Insurance Code Section 11580.4. All additional insured endorsements shall be on the form of endorsement found in Section 00485 **and** shall state:

"The Insurance afforded by this policy shall be primary insurance as respects any claim, loss or liability arising out of the Named Insured's operations. Any other insurance maintained by the Additional Insured(s) shall be excess and non-contributory with the insurance provided hereunder. The insurer hereby waives any rights of subrogation against any Additional Insured. Any deductible or self-insured retention due under this policy may be paid or satisfied by any Additional Insured should the Named Insured fail to do so."

D. *Deductibles and Self-Insured Retention*. Contractor and its Subcontractors shall pay all deductibles or self-insured retentions under each policy of insurance they are required to maintain under the Contract Documents. Their policies shall not contain a provision that requires that only the named insured may pay the deductible or self-insured retention. The additional insureds under each policy shall have the right, but not the obligation, to pay any deductible or self-insured retention should the Contractor or any

Subcontractor fail to do so. In the event the Owner pays any deductible or self-insured retention, Owner shall be entitled to reimbursement by Contractor.

E. *Acceptance of Coverage*. All insurance policies, certificates, endorsements and binders shall be subject to the approval of Owner as to form and content. The insurance requirements are subject to amendment or waiver only if approved in writing by Owner.

F. *Contractor's Failure to Provide Required Insurance*. Failure to maintain required insurance at all times shall constitute a default and material breach. In such event, Contractor shall immediately notify Owner and cease all performance under this Contract until further directed by the Owner. In the absence of satisfactory insurance coverage, Owner may, at its discretion and sole option: (a) procure insurance with collection rights for premiums and costs against Contractor by way of set-off or recoupment from sums due Contractor; (b) immediately terminate or suspend Contractor's performance of the Contract; (c) pay Contractor's premiums for renewal of Contractor's coverage; or (d) self-insure the risk, with all damages and costs incurred, by judgment, settlement or otherwise, including attorney's fees and costs, being collectible from Contractor, by way of set-off or recoupment from any sums due Contractor. Upon demand, Contractor shall repay Owner for all sums that Owner paid to obtain, renew, reinstate or replace the insurance, or Owner may offset the cost against any monies that the Owner may owe Contractor.

G. *Reassessment of Contractor's Insurance Requirements*. At any time during the duration of this Contract, the Owner may require that Contractor obtain, pay for, and maintain more or less insurance depending on the Owner's assessment of any one or more of the following factors: (1) the Owner's risk of liability or exposure arising out of, or in any way connected with, Contractor's services under this Contract; (2) the nature or number of accidents, claims, or lawsuits arising out of, or in any way connected with, Contractor's services under this Contract; or (3) the availability, or affordability, or both, of increased liability insurance coverage. The Owner reserves the right to utilize a wrap insurance program for the Work of the Project. In the event the Owner implements a wrap program, Owner shall be entitled to reduce/credit the Contract Price in an amount equal to the premium for Contractor's insurance and its Subcontractors' insurance. Contractor agrees and will require its Subcontractors to cooperate with Owner in determining the amount of the credit due Owner and will provide Owner with true and correct copies of all existing and recent insurance policies and invoices for premiums.

5.05 *Blank*

5.06 *Blank*

5.07 *Blank*

5.08 *Blank*

5.09 *Acceptance of Bonds and Insurance; Option to Replace*

A. If Owner has any objection to the coverage afforded by or other provisions of the bonds or insurance required to be purchased and maintained by Contractor in accordance with

Article 5 on the basis of non-conformance with the Contract Documents, the objecting party shall so notify the other party in writing within 10 days after receipt of the certificates (or other evidence requested) required by Paragraph 2.01.A. Contractor shall each provide to the Owner such additional information in respect of insurance provided as the Owner may reasonably request. If Contractor does not purchase or maintain all of the bonds and insurance required of Contractor by the Contract Documents, Contractor shall notify the Owner in writing of such failure to purchase prior to the start of the Work, or of such failure to maintain prior to any change in the required coverage. Without prejudice to any other right or remedy, the Owner may elect to obtain equivalent bonds or insurance to protect the Owner's interests at the expense of the Contractor, and a Change Order shall be issued to adjust the Contract Price accordingly.

5.10 *Blank*

ARTICLE 6 – CONTRACTOR'S RESPONSIBILITIES

6.01 *Supervision and Superintendence*

A. Contractor shall supervise, inspect, and direct the Work competently and efficiently, devoting such attention thereto and applying such skills and expertise as may be necessary to perform the Work in accordance with the Contract Documents. Contractor shall be solely responsible for the means, methods, techniques, sequences, and procedures of construction. Contractor shall not be responsible for the negligence of Owner, Designer, or Engineer in the design or specification of a specific means, method, technique, sequence, or procedure of construction which is shown or indicated in and expressly required by the Contract Documents. Contractor shall be responsible for making sure that the completed Work complies accurately with the Contract Documents.

B. At all times during the progress of the Work, Contractor shall assign a competent resident superintendent, who shall be the individual designated by Contractor under Paragraph 2.06.B, and who shall not be replaced without written notice to Owner and Engineer except under extraordinary circumstances.

   The resident superintendent shall be present at the Site of the Work at all times while Work is actually in progress on the Contract. When Work is not in progress and during periods when Work is suspended, arrangements acceptable to Engineer shall be made for any work which may be required under the Contract Documents.

C. Whenever the resident superintendent is not present on any particular part of the work where it may be desired to give direction, orders will be given by Engineer which shall be received and obeyed by the superintendent or foreman who may have charge of the particular work in reference to which the orders are given.

   Any order given by Engineer, not otherwise required by the Contract Documents to be in writing, will on request of Contractor, be given or confirmed by the Engineer in writing.

D. Contractor shall be skilled in the type of work required by the Contract Documents and shall be licensed in accordance with applicable law. Contractor shall perform at least 30 percent of the dollar value of the Work using personnel on its own payroll.

6.02 *Labor; Working Hours*

A. Contractor shall provide competent, suitably qualified personnel to survey and lay out the Work and perform construction as required by the Contract Documents. Contractor shall at all times maintain good discipline and order at the Site.

Contractor shall remove any person performing Work upon written request by Engineer if the Engineer has reason to believe that such worker has behaved in a manner that demonstrates incompetence or other unsuitable behavior. Notwithstanding the forgoing, nothing in the Contract Documents imposes any obligation, responsibilities, or liabilities on Engineer and/or Owner for any incompetence or unsuitable behavior of any persons employed by Contractor (or any Subcontractor or Supplier), or any other persons allowed on the Site by a Contractor, Subcontractor or Supplier.

B. Except as otherwise required for the safety or protection of persons or the Work or property at the Site or adjacent thereto, and except as otherwise stated in the Contract Documents, all Work at the Site shall be performed during regular working hours. Contractor will not permit the performance of Work on a Saturday, Sunday, or any legal holiday without Engineer's written consent (which will not be unreasonably withheld) given after prior written notice to Engineer. Eight hours labor constitutes a legal day's work in the state of California under California Labor Code section 1810.

C. This is a federally financed public works project subject to all applicable Federal and State Laws and Regulations governing public works projects, including but not limiting to any and all labor Laws and Regulations requiring the payment of prevailing wages. Contractor shall comply with all applicable Federal and State labor and prevailing wage Laws and Regulations, and shall comply with all labor and wage requirements referenced in sections 00200 and 00300 of the Contract Documents. Contractor shall also comply with the labor standard provisions set forth in Article 21.

6.03 *Services, Materials, and Equipment*

A. Unless otherwise specified in the Contract Documents, Contractor shall provide and assume full responsibility for all services, materials, equipment, labor, transportation, construction equipment and machinery, tools, appliances, fuel, power, light, heat, telephone, water, sanitary facilities, temporary facilities, and all other facilities and incidentals necessary for the performance, testing, start-up, and completion of the Work.

B. All materials and equipment incorporated into the Work shall be as specified or, if not specified, shall be of good quality and new, except as otherwise provided in the Contract Documents. If required by Engineer, Contractor shall furnish satisfactory evidence (including reports of required tests) as to the source, kind, and quality of materials and equipment.

C. All materials and equipment shall be stored, applied, installed, connected, erected, protected, used, cleaned, and conditioned in accordance with instructions of the applicable Supplier, except as otherwise may be provided in the Contract Documents.

D. All warranties and guarantees required by the Specifications shall expressly run to the benefit of Owner. Contractor is responsible for making sure that all such warranties and guaranties are transferable to, and enforceable by, Owner. Contractor agrees to assign to Owner at the time of final completion of the Work any and all manufacturer's warranties and guarantees relating to materials and labor used in the Work and Contractor further agrees to perform the Work in such a manner as to preserve any and all manufacturer's warranties and guarantees.

6.04 *Progress Schedule*

A. Contractor shall adhere to the Progress Schedule established in accordance with Paragraph 2.07 as it may be adjusted from time to time as provided below.

1. Contractor shall submit to Engineer for acceptance (to the extent indicated in Paragraph 2.07) proposed adjustments in the Progress Schedule that will not result in changing the Contract Times. Such adjustments will comply with any provisions of the General Requirements applicable thereto.

2. Proposed adjustments in the Progress Schedule that will change the Contract Times shall be submitted in accordance with the requirements of Article 12. Adjustments in Contract Times may only be made by a Change Order.

3. If Contractor desires to make a major change in the method of operations after commencing construction, or if the schedule fails to reflect the actual progress, Contractor shall submit to Engineer a revised Progress Schedule as soon as possible and prior to beginning revised operations.

4. Contractor shall submit to Engineer an updated Progress Schedule within 5 days of the Engineer's written request.

6.05 *Substitutes and "Or-Equals"*

A. Whenever an item of material or equipment is specified or described in the Contract Documents by using the name of a proprietary item or the name of a particular Supplier, the specification or description is intended to establish the type, function, appearance, and quality required. Unless the specification or description contains or is followed by words reading that no like, equivalent, or "or-equal" item or no substitution is permitted, other items of material or equipment or material or equipment of other Suppliers may be submitted to Engineer for review under the circumstances described below.

1. *"Or-Equal" Items:* If in Engineer's sole discretion an item of material or equipment proposed by Contractor is functionally equal to that named and sufficiently similar so that no change in related Work will be required, it may be considered by Engineer as an "or-equal" item, in which case review and approval of the proposed item may, in Engineer's sole discretion, be accomplished without compliance with

some or all of the requirements for approval of proposed substitute items. For the purposes of this Paragraph 6.05.A.1, a proposed item of material or equipment will be considered functionally equal to an item so named if:

a. in the exercise of reasonable judgment Engineer determines that:

1) it is at least equal in materials of construction, quality, durability, appearance, strength, and design characteristics;

2) it will reliably perform at least equally well the function and achieve the results imposed by the design concept of the completed Project as a functioning whole; and

3) it has a proven record of performance and availability of responsive service.

b. Contractor certifies that, if approved and incorporated into the Work:

1) there will be no increase in cost to the Owner or increase in Contract Times; and

2) it will conform substantially to the detailed requirements of the item named in the Contract Documents.

2. *Substitute Items:*

a. If in Engineer's sole discretion an item of material or equipment proposed by Contractor does not qualify as an "or-equal" item under Paragraph 6.05.A.1, it will be considered a proposed substitute item.

b. Contractor shall submit sufficient information as provided below to allow Engineer to determine if the item of material or equipment proposed is essentially equivalent to that named and an acceptable substitute therefor. Requests for review of proposed substitute items of material or equipment will not be accepted by Engineer from anyone other than Contractor.

c. The requirements for review by Engineer will be as set forth in Paragraph 6.05.A.2.d, as supplemented by the General Requirements, and as Engineer may decide is appropriate under the circumstances.

d. Contractor shall make written application to Engineer for review of a proposed substitute item of material or equipment that Contractor seeks to furnish or use. The application:

1) shall certify that the proposed substitute item will:

a) perform adequately the functions and achieve the results called for by the general design,

b) be similar in substance to that specified, and

c) be suited to the same use as that specified;

2) will state:

a) the extent, if any, to which the use of the proposed substitute item will prejudice Contractor's achievement of Substantial Completion on time,

b) whether use of the proposed substitute item in the Work will require a change in any of the Contract Documents (or in the provisions of any other direct contract with Owner for other work on the Project) to adapt the design to the proposed substitute item, and

c) whether incorporation or use of the proposed substitute item in connection with the Work is subject to payment of any license fee or royalty;

3) will identify:

a) all variations of the proposed substitute item from that specified, and

b) available engineering, sales, maintenance, repair, and replacement services; and

4) shall contain an itemized estimate of all costs or credits that will result directly or indirectly from use of such substitute item, including costs of redesign and claims of other contractors affected by any resulting change.

B. *Substitute Construction Methods or Procedures:* If a specific means, method, technique, sequence, or procedure of construction is expressly required by the Contract Documents, Contractor may furnish or utilize a substitute means, method, technique, sequence, or procedure of construction approved by Engineer. Contractor shall submit sufficient information to allow Engineer, in Engineer's sole discretion, to determine that the substitute proposed is equivalent to that expressly called for by the Contract Documents. The requirements for review by Engineer will be similar to those provided in Paragraph 6.05.A.2.

C. *Engineer's Evaluation*

1. *During Bidding.* The Contract, if awarded, will be on the basis of materials and equipment specified or described in the Bidding Documents, or "or-equal" materials and equipment as defined in paragraph 6.05 of the General Conditions, or those substitute or materials and equipment approved by the Owner and identified by Addendum. The materials and equipment described in the Bidding Documents establish a standard of required type, function, and quality to be met by any proposed substitute or "or-equal" item. Request for Owner's clarification of materials and equipment considered "or-equal" prior to the Effective Date of the Agreement must be received by the Owner at least 10 days prior to the date for receipt of Bids. No item of material or equipment will be considered by Owner as a substitute unless written request for approval has been submitted by Bidder and has been received by Owner at least 15 days prior to the date for receipt of Bids. Each request shall conform to the requirements of Paragraph 6.05 of the General Conditions. The burden of proof of the merit of the proposed item is upon the

Bidder. Owner's decision of approval or disapproval of a proposed item will be final. If Owner approves any proposed substitute item, such approval will be set forth in an Addendum issued to all prospective Bidders. Bidders shall not rely upon approvals made in any other manner.

2. *After Effective Date of Agreement.* Engineer will be allowed a reasonable time within which to evaluate each proposal or submittal made pursuant to Paragraphs 6.05.A and 6.05.B. Engineer may require Contractor to furnish additional data about the proposed substitute item. Engineer will be the sole judge of acceptability. No "or equal" or substitute will be ordered, installed or utilized until Engineer's review is complete, which will be evidenced by a Change Order in the case of a substitute and an approved Shop Drawing for an "or equal." Engineer will advise Contractor in writing of any negative determination.

D. *Special Guarantee:* Owner may require Contractor to furnish at Contractor's expense a special performance guarantee or other surety with respect to any substitute.

E. *Engineer's Cost Reimbursement*: Engineer will record Engineer's costs in evaluating a substitute proposed or submitted by Contractor pursuant to Paragraphs 6.05.A.2 and 6.05.B. Whether or not Engineer approves a substitute so proposed or submitted by Contractor, Contractor shall reimburse Owner for the reasonable charges of Engineer for evaluating each such proposed substitute. Contractor shall also reimburse Owner for the reasonable charges of Engineer for making changes in the Contract Documents (or in the provisions of any other direct contract with Owner) resulting from the acceptance of each proposed substitute.

F. *Contractor's Expense*: Contractor shall provide all data in support of any proposed substitute or "or-equal" at Contractor's expense.

6.06 *Concerning Subcontractors, Suppliers, and Others*

A. No later than 14 days after the Effective Date of the Agreement by Contractor and Owner, Contractor shall furnish Owner and Engineer, in writing, with the names of all persons or entities proposed as manufacturers of the products identified in the Specifications (including those who are to furnish materials or equipment fabricated to a special design) and, where applicable, the name of the installing Subcontractor. Contractor shall not employ any Subcontractor, Supplier, or other individual or entity, whether initially or as a replacement, against whom Owner may have reasonable objection. Contractor shall not be required to employ any Subcontractor, Supplier, or other individual or entity to furnish or perform any of the Work against whom Contractor has reasonable objection.

Contractor is solely responsible for which Subcontractor, Supplier, or any other individual or entity it uses to furnish or perform any of the Work, and Owner's failure to object to any such Subcontractor, Supplier, or other individual or entity does not in any way relieve Contractor of this responsibility. No act or omission by Owner or Engineer shall be construed as an acceptance or approval of any such Subcontractor, Supplier, or individual or entity. No act or omission by Owner or Engineer shall be construed as a waiver of any right of Owner or Engineer to reject defective Work.

Every Subcontractor shall be skilled in the type of work required by the Contract Documents and shall be licensed in accordance with applicable law.

B. Contractor shall comply with the Subcontractor Listing Laws set forth in California Public Contract Code sections 4100-4114. If Owner consents to Contractors request for substitution of a Subcontractor pursuant to Public Contract Code section 4107, such consent shall not be deemed an approval or acceptance of a Subcontractor, but merely Owner's determination that such consent is authorized under the statute.

   Pursuant to Public Contract Code section 4114, Owner's functions under Public Contract Code sections 4107 and 4110 are delegated to the County's Director of Public Works (or his designee). Contractor shall provide all data in support of any Subcontractor substitution request. Owner will be allowed a reasonable time within which to evaluate such request, and may require Contractor to furnish additional data regarding the requested substitution. All data provided by Contractor regarding the requested substitution shall be at Contractor's sole expense. Whether or not Owner approves the requested substitution proposed by Contractor, Contractor shall reimburse Owner for the reasonable charges of Owner for Owner's time and expense in evaluating the requested substitution. Regardless of whether or not Owner approves a requested substitution, Contractor shall not be entitled to any additional Contract Time or any increase in Contract Price for any time delays relating to a resolution of a Subcontractor substitution request so long as Owner did not unreasonably delay the processing of the request.

   If Owner's decision on a Subcontractor substitution request is challenged in court, under no circumstances shall Contractor be entitled to any additional Contract Time or any increase in Contract Price if Owner's decision was to consent to a Subcontractor substitution requested by Contractor. Furthermore, Contractor shall indemnify Owner from all claims and/or court actions challenging the Owner's approval of any Subcontractor substitution requested by Contractor, regardless of whether the claim or action seeks legal or equitable relief, so that any and all costs or damages incurred by Owner relating to said claims and/or actions shall be paid by Contractor. If an Owner's decision to deny a Subcontractor substitution requested by Contractor is overruled by a court, Contractor shall not be entitled to any additional Contract Time or any increase in Contract Price for any associated time delays unless the court expressly finds that (1) Owner acted in an arbitrary and capricious manner and (2) Owner's conduct caused an unnecessary delay.

C. Contractor shall be fully responsible to Owner and Engineer for all acts and omissions of the Subcontractors, Suppliers, and other individuals or entities performing or furnishing any of the Work just as Contractor is responsible for Contractor's own acts and omissions. Nothing in the Contract Documents:

   1. shall create for the benefit of any such Subcontractor, Supplier, or other individual or entity any contractual relationship between Owner or Engineer and any such Subcontractor, Supplier or other individual or entity; nor

2. shall create any obligation on the part of Owner or Engineer to pay or to see to the payment of any moneys due any such Subcontractor, Supplier, or other individual or entity except as may otherwise be required by Laws and Regulations.

D. Contractor shall be solely responsible for scheduling and coordinating the Work of Subcontractors, Suppliers, and other individuals or entities performing or furnishing any of the Work under a direct or indirect contract with Contractor.

E. Contractor shall require all Subcontractors, Suppliers, and such other individuals or entities performing or furnishing any of the Work to communicate with Engineer through Contractor.

F. The divisions and sections of the Specifications and the identifications of any Drawings shall not control Contractor in dividing the Work among Subcontractors or Suppliers or delineating the Work to be performed by any specific trade.

G. *Blank*

H. Owner may furnish to any Subcontractor or Supplier, to the extent practicable, information about amounts paid to Contractor on account of Work performed for Contractor by a particular Subcontractor or Supplier.

I. Contractor shall not award work valued at more than seventy (70%) of the Contract Price to Subcontractor(s).

J. All subcontracts shall be in writing and shall specifically provide that Owner is an intended third-party beneficiary of said subcontract.

K. All Work performed for Contractor by a Subcontractor or Supplier will be pursuant to a signed written agreement between Contractor and Subcontractor or Supplier which specifically binds Subcontractor or Supplier to the applicable terms and conditions of the Contract Documents for the benefit of Owner and Engineer. Each and every agreement between Contractor and any Subcontractor or Supplier shall provide for Contractor's assignment of the agreement to Owner, at Owner's option, in the event of a termination by Owner under Paragraphs 15.02 or 15.03. By executing the Agreement that is part of these Contract Documents, Contractor hereby assigns to Owner each agreement entered into by Contractor and any Subcontractor or Supplier, subject to the following two conditions subsequent: (1) Owner exercises its right to terminate Contractor’s services pursuant to Paragraphs 15.02 or 15.03; and (2) Owner notifies in writing the Contractor and the Subcontractor/Supplier of the particular agreement that (a) Owner is exercising its right under this paragraph to accept an assignment of that particular agreement, and (b) the date upon which the assignment is being accepted by Owner. Under this paragraph, Owner has the right to only accept those assignments which Owner believes is in its best interest. Only those particular agreements expressly and specifically accepted by Owner pursuant to this paragraph shall be deemed assigned to Owner.

L. Upon the request of Owner or Engineer, Contractor shall provide Engineer a copy of any requested subcontract within five (5) days of the request.

6.07 *Patent Fees and Royalties*

A. Contractor shall pay all license fees and royalties and assume all costs incident to the use in the performance of the Work or the incorporation in the Work of any invention, design, process, product, or device which is the subject of patent rights or copyrights held by others. If a particular invention, design, process, product, or device is specified in the Contract Documents for use in the performance of the Work and if, to the actual knowledge of Owner, Designer, or Engineer, its use is subject to patent rights or copyrights calling for the payment of any license fee or royalty to others, the existence of such rights shall be disclosed by Owner in the Contract Documents.

B. *Blank*

C. To the fullest extent permitted by Laws and Regulations, Contractor shall indemnify and hold harmless Owner, Designer, and Engineer, and the officers, directors, members, partners, employees, agents, consultants and subcontractors of each and any of them from and against all claims, costs, losses, and damages (including but not limited to all fees and charges of engineers, architects, attorneys, and other professionals and all court or arbitration or other dispute resolution costs) arising out of or relating to any infringement of patent rights or copyrights incident to the use in the performance of the Work or resulting from the incorporation in the Work of any invention, design, process, product, or device not specified in the Contract Documents.

D. Neither the approval of any material or equipment proposed by Contractor under Paragraph 6.05.A, nor the approval of any substitute means, method, technique, sequence, or procedure of construction approved under Paragraph 6.05.B. shall constitute an "invention, design, process, product, or device specified in the Contract Documents" under this Paragraph 6.07. Contractor shall pay all license fees and royalties and assume all costs incident to the use of any such material, equipment, means, method, technique, sequence, or procedure of construction approved under Paragraph 6.05.A. or 6.05.B. which is the subject of any patent rights or copyrights held by others.

6.08 *Permits*

A. Unless otherwise provided in the Specifications, Contractor shall obtain and pay for all construction permits and licenses. Owner shall assist Contractor, when necessary, in obtaining such permits and licenses. Contractor shall pay all governmental charges and inspection fees necessary for the prosecution of the Work which are applicable at the time of opening of Bids, or, if there are no Bids, on the Effective Date of the Agreement. Contractor shall pay all charges of utility owners for connections to the Work, and Owner shall pay all charges of such utility owners for costs related to providing post construction service to the Work. All such payment of fee, charges, permits, and licenses by Contractor under this Paragraph 6.08 shall be considered as included in the prices paid for the various Contract items of Work and no additional payment will be made therefor.

6.09 *Laws and Regulations*

A. Contractor shall give all notices required by and shall comply with all Laws and Regulations applicable to the performance of the Work. Except where otherwise expressly required by applicable Laws and Regulations, neither Owner nor Engineer shall be responsible for monitoring Contractor's compliance with any Laws or Regulations.

B. If Contractor performs any Work knowing or having reason to know that it is contrary to Laws or Regulations, Contractor shall bear all claims, costs, losses, and damages (including but not limited to all fees and charges of engineers, architects, and other professionals and all court or arbitration or other dispute resolution costs) arising out of or relating to such Work. Contractor shall indemnify and hold harmless Owner, Engineer, Designer, the Agency and each of their respective trustees, officers, directors, members, partners, employees, agents, and consultants from and against all claims, costs, losses, and damages (including but not limited to all fees and charges of engineers, architects, attorneys, and other professionals and all court or arbitration or other dispute resolution costs) arising out of or relating to any claim or action, legal or equitable, brought by any agency or body against Owner relating to such Work performed by Contractor contrary to Laws and Regulations (including, without limitation, the Federal Comprehensive Environmental Response, Compensation and Liability Act, the Resource Conservation and Recovery Act, the California Hazardous Substance Account Act, the Federal Water Pollution Control Act, the Clean Air Act, the California Hazardous Waste Control Law and California Water Code Section 13304). The duty to defend shall apply notwithstanding any alleged or actual concurrent negligence (active or passive) or partial fault on the part of any person or entity indemnified hereunder.

C. Any new Laws or Regulations adopted after the time of opening of Bids that cause an effect on the cost or time of performance of the Work shall be the subject of an adjustment in Contract Price or Contract Times. If Owner and Contractor are unable to agree on entitlement to, or on the amount or extent, if any, of any such adjustment, Contractor may submit a Claim as provided in Paragraph 10.05. Similarly, if Contractor disagrees with a unilateral adjustment in Contract Price or Contract Times made by Owner, Contractor may submit a Claim as provided in Paragraph 10.05.

D. The date upon which a new Law or Regulation is adopted shall be determined by the date it was formally adopted by the governing body or officer authorized to adopt the Law or Regulation, and not by its effective date. (For example, California Senate Bill 189 (SB189, Stats 2010, c. 697), which was approved by the Governor of September 30, 2010, but contains provisions which are not effective until July 1, 2012, would not be considered a new Law or Regulation, even if the opening of Bids is before July 1, 2012.) Contractor shall not be entitled to any adjustment in Contract Price or Contract Time when the new Law or Regulation is an Order specifically directed towards Contractor that relates to Contractor's past or present conduct, or other circumstances within Contractor's control or responsibility.

6.10 *Taxes*

A. Contractor shall pay all sales, consumer, use, and other similar taxes required to be paid by Contractor in accordance with the Laws and Regulations of the place of the Project which are applicable during the performance of the Work.

6.11 *Use of Site and Other Areas*

A. *Limitation on Use of Site and Other Areas:*

1. Contractor shall confine construction equipment, the storage of materials and equipment, and the operations of workers to the Site and other areas permitted by Laws and Regulations, and shall not unreasonably encumber the Site and other areas with construction equipment or other materials or equipment. Contractor shall assume full responsibility for any damage to any such land or area, or to the owner or occupant thereof, or of any adjacent land or areas resulting from the performance of the Work.

2. Should any claim be made by any such owner or occupant because of the performance of the Work, Contractor shall promptly settle with such other party by negotiation or otherwise resolve the claim by arbitration or other dispute resolution proceeding or at law.

3. To the fullest extent permitted by Laws and Regulations, Contractor shall indemnify and hold harmless Owner, Engineer, Designer, the Agency and each of their respective trustees, officers, directors, members, partners, employees, agents, consultants and subcontractors of each and any of them from and against all claims, costs, losses, and damages (including but not limited to all fees and charges of engineers, architects, attorneys, and other professionals and all court or arbitration or other dispute resolution costs) arising out of or relating to any claim or action, legal or equitable, brought by any such owner or occupant against Owner, or any other party indemnified hereunder to the extent caused by or based upon Contractor's performance of the Work. The duty to defend shall apply notwithstanding any alleged or actual concurrent negligence (active or passive) or partial fault on the part of any person or entity indemnified hereunder.

B. *Removal of Debris During Performance of the Work:* During the progress of the Work Contractor shall keep the Site and other areas free from accumulations of waste materials, rubbish, and other debris. Removal and disposal of such waste materials, rubbish, and other debris shall conform to applicable Laws and Regulations.

C. *Cleaning:* Prior to Substantial Completion of the Work Contractor shall clean the Site and the Work and make it ready for utilization by Owner. At the completion of the Work Contractor shall remove from the Site all tools, appliances, construction equipment and machinery, and surplus materials and shall restore to original condition all property not designated for alteration by the Contract Documents.

D. *Loading Structures:* Contractor shall not load nor permit any part of any structure to be loaded in any manner that will endanger the structure, nor shall Contractor subject any part of the Work or adjacent property to stresses or pressures that will endanger it.

6.12 *Record Documents*

A. Contractor shall maintain in a safe place at the Site one record copy of all Drawings, Specifications, Addenda, Change Orders, Work Change Directives, Field Orders, and written interpretations and clarifications in good order and annotated to show changes made during construction. These record documents together with all approved Samples and a counterpart of all approved Shop Drawings will be available to Engineer for reference. Upon completion of the Work, these record documents, Samples, and Shop Drawings shall be delivered by Contractor to Engineer for Owner.

6.13 *Safety and Protection*

A. Contractor shall be solely responsible for initiating, maintaining and supervising all safety precautions and programs in connection with the Work. This requirement shall apply continuously, including days when Work is suspended, and shall not be limited to normal working hours. Such responsibility does not relieve Subcontractors of their responsibility for the safety of persons or property in the performance of their work, nor for compliance with applicable safety Laws and Regulations. Contractor shall take all necessary precautions for the safety of, and shall provide the necessary protection to prevent damage, injury or loss to:

1. all persons on the Site or who may be affected by the Work, including but not limited to members of the public using any adjoining road or right of way;

2. all the Work and materials and equipment to be incorporated therein, whether in storage on or off the Site; and

3. other property at the Site or adjacent thereto, including trees, shrubs, lawns, walks, pavements, roadways, structures, utilities, fences, wall, signs, buildings, all highway facilities and Underground Facilities, and any other improvements or facilities within or adjacent to the Work not designated for removal, relocation, or replacement in the course of construction.

B. Contractor shall comply with all applicable Laws and Regulations relating to the safety of persons or property, or to the protection of persons or property from damage, injury, or loss; and shall erect and maintain all necessary safeguards for such safety and protection. Contractor shall notify owners of adjacent property and of Underground Facilities and other utility owners when prosecution of the Work may affect them, and shall cooperate with them in the protection, removal, relocation, and replacement of their property.

1. Contractor shall maintain at its office or other well-known place at the Project Site, the appropriate items for giving first aid to the injured, and shall establish the procedure for the immediate removal to a hospital or a doctor's care of persons (including employees) who may be injured on the Project Site.

2. No review or inspections by Owner or Engineer shall relieve Contractor of its responsibilities under this Paragraph 6.13.

3. If death or serious injuries or serious damages are caused, the accident shall be reported immediately by telephone or messenger to Engineer and Owner. In addition, Contractor must promptly report in writing to Engineer all accidents whatsoever arising out of, or in connection with, the performance of the Work whether on, or adjacent to the Site, giving full details and statements of witnesses. Nothing in this paragraph shall excuse Contractor from reporting any accident, damage, injuries, or fatalities to any other person, entity, or agency as may be required by Laws or Regulations.

4. For all excavations in excess of five (5) feet, Contractor shall, pursuant to Labor Code Section 6705, submit in advance of any excavation hereunder a detailed plan showing the design of shoring, bracing, sloping, or other provisions to be made for worker protection from caving ground. No such excavation shall be made until said detailed plan is submitted by Contractor and accepted by Engineer. If such plan varies from the shoring system standards, the plan shall be prepared by a registered civil or structural engineer. Nothing in this paragraph shall be deemed to allow the use of a shoring, sloping, or protective system less effective than that required by the Construction Safety Orders of the California Division of Occupational Safety and Health. Nothing in this paragraph shall be construed as imposing any liability upon Owner or Engineer.

5. Contractor shall comply with applicable occupational safety and health standards, rules, regulations, and orders. The Occupational Safety and Health Standards Board is the only agency authorized in the State to adopt and enforce occupational safety and health standards (Labor Code § 142 et seq.). Contractor is the controlling employer and must ensure hazardous conditions are corrected (Labor Code § 6400).

6. Contractor shall submit to Engineer copies of its Injury and Illness Prevention Program and permits required by Cal/OSHA.

C. Contractor shall comply with the applicable requirements of Owner's safety programs, if any. The Specifications identify any Owner's safety programs that are applicable to the Work.

D. Contractor shall notify Owner and Engineer in writing of the specific requirements of Contractor's safety program and Owner's and Engineer's employees and representatives shall comply therewith while at the Site, so long as said requirements do not unreasonably interfere with Owner's and Engineer's functions at the Site.

E. All damage, injury, or loss to any property referred to in Paragraph 6.13.A.2 or 6.13.A.3 caused, directly or indirectly, in whole or in part, by Contractor, any Subcontractor, Supplier, or any other individual or entity directly or indirectly employed by any of them to perform any of the Work, or anyone for whose acts any of them may be liable, shall be the responsibility of Contractor and shall be remedied by Contractor (except damage or loss attributable to the fault of Drawings or Specifications or to the acts or omissions of Owner or Engineer or Designer or anyone employed by any of them, or anyone for whose acts any of them may be liable, and not attributable, directly or indirectly, in whole or in part, to the fault or negligence of Contractor or any

Subcontractor, Supplier, or other individual or entity directly or indirectly employed by any of them).

F. Contractor's duties and responsibilities for safety and for protection of the Work shall continue until such time as all the Work is completed and Engineer has issued a notice to Owner and Contractor in accordance with Paragraph 14.07.B that the Work is acceptable (except as otherwise expressly provided in connection with Substantial Completion).

G. Full compensation for furnishing all labor, materials, tools, equipment, and incidentals and for doing all the Work involved in protecting person or property or repairing property, as specified in the Contract Documents shall be considered as included in the prices paid for the various contract items of Work and no additional compensation will be allowed therefor.

6.14 *Safety Representative*

A. Contractor shall designate a qualified and experienced safety representative at the Site whose duties and responsibilities shall be the prevention of accidents and the maintaining and supervising of safety precautions and programs.

6.15 *Hazard Communication Programs*

A. Contractor shall be responsible for coordinating any exchange of material safety data sheets or other hazard communication information required to be made available to or exchanged between or among employers at the Site in accordance with all applicable Laws or Regulations.

6.16 *Emergencies*

A. In emergencies affecting the safety or protection of persons or the Work or property at the Site or adjacent thereto, Contractor is obligated to act to prevent threatened damage, injury, or loss. Contractor shall immediately notify Engineer of emergency. Contractor shall also provide Engineer written notice as soon as feasible, and in no instance later than the end of the next business day after the day on which the alleged emergency occurred, if Contractor believes that any significant changes in the Work or variations from the Contract Documents have been caused thereby or are required as a result thereof. If Engineer determines that a change in the Contract Documents is required because of the action taken by Contractor in response to such an emergency, a Work Change Directive or Change Order will be issued.

6.17 *Shop Drawings and Samples*

A. Contractor shall submit Shop Drawings and Samples to Engineer for review and approval in accordance with the accepted Schedule of Submittals (as required by Paragraph 2.07). Each submittal will be identified as Engineer may require.

1. *Shop Drawings:*

a. Submit 5 copies.

b. Data shown on the Shop Drawings will be complete with respect to quantities, dimensions, specified performance and design criteria, materials, and similar data to show Engineer the services, materials, and equipment Contractor proposes to provide and to enable Engineer to review the information for the limited purposes required by Paragraph 6.17.D.

2. *Samples:*

a. Submit number of Samples specified in the Specifications.

b. Clearly identify each Sample as to material, Supplier, pertinent data such as catalog numbers, the use for which intended and other data as Engineer may require to enable Engineer to review the submittal for the limited purposes required by Paragraph 6.17.D.

B. Where a Shop Drawing or Sample is required by the Contract Documents or the Schedule of Submittals, any related Work performed prior to Engineer's review and approval of the pertinent submittal will be at the sole expense and responsibility of Contractor.

C. *Submittal Procedures:*

1. Before submitting each Shop Drawing or Sample, Contractor shall have:

a. reviewed and coordinated each Shop Drawing or Sample with other Shop Drawings and Samples and with the requirements of the Work and the Contract Documents;

b. determined and verified all field measurements, quantities, dimensions, specified performance and design criteria, installation requirements, materials, catalog numbers, and similar information with respect thereto;

c. determined and verified the suitability of all materials offered with respect to the indicated application, fabrication, shipping, handling, storage, assembly, and installation pertaining to the performance of the Work; and

d. determined and verified all information relative to Contractor's responsibilities for means, methods, techniques, sequences, and procedures of construction, and safety precautions and programs incident thereto.

2. Each submittal shall bear a stamp or specific written certification that Contractor has satisfied Contractor's obligations under the Contract Documents with respect to Contractor's review and approval of that submittal.

3. With each submittal, Contractor shall give Engineer specific written notice of any variations that the Shop Drawing or Sample may have from the requirements of the Contract Documents. This notice shall be both a written communication separate from the Shop Drawings or Sample submittal; and, in addition, by a specific notation made on each Shop Drawing or Sample submitted to Engineer for review and approval of each such variation.

4. The practice of submitting incomplete or unchecked Shop Drawings for Engineer to correct or finish will not be acceptable; and Shop Drawings which, in the opinion of Engineer, clearly indicate that they have not been checked by Contractor will be considered as not complying with the intent of the Contract Documents and will be returned to Contractor for resubmission in the proper form.

D. *Engineer's Review:*

1. Engineer will provide timely review of Shop Drawings and Samples in accordance with the Schedule of Submittals acceptable to Engineer. Engineer's review and approval will be only to determine if the items covered by the submittals will, after installation or incorporation in the Work, conform to the information given in the Contract Documents and be compatible with the design concept of the completed Project as a functioning whole as indicated by the Contract Documents.

2. Engineer's review and approval will not extend to means, methods, techniques, sequences, or procedures of construction (except where a particular means, method, technique, sequence, or procedure of construction is specifically and expressly called for by the Contract Documents) or to safety precautions or programs incident thereto. The review and approval of a separate item as such will not indicate approval of the assembly in which the item functions.

3. Engineer's review and approval shall not relieve Contractor from responsibility for any variation from the requirements of the Contract Documents unless Contractor has complied with the requirements of Paragraph 6.17.C.3 and Engineer has given written approval of each such variation by specific written notation thereof incorporated in or accompanying the Shop Drawing or Sample. Engineer's review and approval shall not relieve Contractor from responsibility for complying with the requirements of Paragraph 6.17.C.1.

4. After the Shop Drawings have been reviewed by Engineer, two sets of submittals will be returned to Contractor appropriately stamped. If major changes or corrections are necessary, the Shop Drawings may be rejected and one set will be returned to Contractor with such changes or corrections indicated.

E. *Resubmittal Procedures:*

1. Contractor shall make corrections required by Engineer and shall return the required number of corrected copies of Shop Drawings and submit, as required, new Samples for review and approval. Contractor shall direct specific attention in writing to revisions other than the corrections called for by Engineer on previous submittals.

   If Contractor makes any changes to resubmitted Shop Drawings other than those changes indicated by Engineer, Contractor shall provide Engineer written notice of such changes. This notice shall be both a written communication separate from the Shop Drawings; and, in addition, by a specific notation made on each Shop Drawing submitted to Engineer for review and approval of each such variation.

F. Contractor shall furnish required submittals with sufficient information and accuracy in order to obtain required approval of an item with no more than three submittals. Engineer will record Engineer's time for reviewing subsequent submittals of Shop Drawings, samples, or other items requiring approval and Contractor shall reimburse Owner for Engineer's charges for such time.

G. In the event that Contractor requests a change of a previously approved item, Contractor shall reimburse Owner for Engineer's charges for its review time unless the need for such change is beyond the control of Contractor.

6.18 *Continuing the Work*

A. Contractor shall carry on the Work and adhere to the Progress Schedule during all disputes or disagreements with Engineer and/or Owner. No Work shall be delayed or postponed pending resolution of any disputes or disagreements.

6.19 *Contractor's General Warranty and Correction Guarantee*

A. Contractor warrants and guarantees to Owner that all Work will be performed and installed in accordance and conformance with the Contract Documents, will be of good quality and new, and will not be defective. Owner and its officers, directors, members, partners, employees, agents, consultants, and subcontractors shall be entitled to rely on the Contractor's warranty and guarantee made hereunder or in any separate warranties by Contractor, its Subcontractors and Suppliers.

B. Contractor's warranty and guarantee hereunder excludes defects or damage caused by:

1. abuse, modification, improper maintenance, or improper operation by persons other than Contractor, Subcontractors, Suppliers, or any other individual or entity for whom Contractor is responsible; or

2. normal wear and tear under normal usage.

This warranty is not limited by the provisions of Paragraph 13.07 herein, relating to Contractor's correction period. The provisions of this Paragraph 6.19 shall survive Contractor's completion of the Work or termination of the Contractor's performance of the Work. Contractor's surety shall be liable for breaches of this warranty and the correction obligations described in this Paragraph 6.19 and in Paragraph 13.07.

C. Contractor's obligation to perform and complete the Work in accordance with the Contract Documents shall be absolute. None of the following will constitute an acceptance of Work that is not in accordance with the Contract Documents or a release of Contractor's obligation to perform the Work in accordance with the Contract Documents:

1. observations by Engineer;

2. recommendation by Engineer or payment by Owner of any progress or final payment;

3. the issuance of a certificate of Substantial Completion by Engineer or any payment related thereto by Owner;

4. use or occupancy of the Work or any part thereof by Owner;

5. any review and approval of a Shop Drawing or Sample submittal or the issuance of a notice of acceptability by Engineer;

6. any inspection, lack of inspection, test, or approval by Engineer or others; or

7. any correction of defective Work by Owner.

D. In addition to the Contractor's general warranty provided in Paragraphs 6.19.A and 6.19.B, Contractor hereby agrees to make, at its own expense, all repairs or replacements necessitated by defective Work, including defects in material or workmanship, supplied under terms of this Contract, which become evident within one year after the date of final acceptance of the Work, or such longer period of time as may be prescribed by the terms of any applicable special guarantee or warranty periods specified in the Contract Documents. After being deemed substantially complete by Engineer and Owner, Contractor shall also warranty its work against trench settlement for a period of three years after the date of final acceptance by Owner, or such longer period of time as may be prescribed by the terms of any applicable special guarantee or warranty periods specified in the Contract Documents.

E. Contractor shall make all repairs and replacements promptly upon receipt of written notice for same from Owner. If Contractor fails to make the repairs and replacements in a timely manner, Owner may do the work, and Contractor and its surety shall be liable for the cost thereof.

6.20 *Indemnification*

A. To the fullest extent permitted by Laws and Regulations, Contractor shall defend, indemnify and hold harmless Owner, Designer, Engineer, the Agency and each of their respective trustees, officers, directors, members, partners, employees, agents, consultants and subcontractors of each and any of them from and against all claims, costs, losses, and damages (including but not limited to all fees and charges of engineers, architects, attorneys, and other professionals and all court or arbitration or other dispute resolution costs) arising out of or relating to the performance of the Work, provided that any such claim, cost, loss, or damage is attributable to bodily injury, sickness, disease, or death, or to injury to or destruction of tangible property, including the loss of use resulting therefrom but only to the extent caused by any negligent act or omission of Contractor, any Subcontractor, any Supplier, or any individual or entity directly or indirectly employed by any of them to perform any of the Work or anyone for whose acts any of them may be liable. The duty to defend shall apply notwithstanding any alleged or actual concurrent negligence (active or passive) or partial fault on the part of any person or entity indemnified hereunder.

B. In any and all claims against Owner, Designer, Engineer, the Agency or any of their trustees, officers, directors, members, partners, employees, agents, consultants, or subcontractors by any employee (or the survivor or personal representative of such

employee) of Contractor, any Subcontractor, any Supplier, or any individual or entity directly or indirectly employed by any of them to perform any of the Work, or anyone for whose acts any of them may be liable, the indemnification obligation under Paragraph 6.20.A shall not be limited in any way by any limitation on the amount or type of damages, compensation, or benefits payable by or for Contractor or any such Subcontractor, Supplier, or other individual or entity under workers' compensation acts, disability benefit acts, or other employee benefit acts.

C. The indemnification obligations of Contractor under Paragraph 6.20.A shall not extend to the liability of Engineer and Engineer's officers, directors, members, partners, employees, agents, consultants and subcontractors arising out of any of the following acts or omissions of Engineer or Engineer's officers, directors, members, partners, employees, agents, consultants and subcontractors:

1. the preparation or approval of, or the failure to prepare or approve maps, Drawings, opinions, reports, surveys, Change Orders, designs, or Specifications; or

2. giving directions or instructions, or failing to give them, if that is the primary cause of the injury or damage.

D. The indemnification obligations of Contractor under Paragraph 6.20.A shall not extend to the liability of Designer and Designer's officers, directors, members, partners, employees, agents, consultants and subcontractors arising out of any of the following acts or omissions of Designer or Designer's officers, directors, members, partners, employees, agents, consultants and subcontractors:

1. the preparation or approval of, or the failure to prepare or approve maps, Drawings, opinions, reports, surveys, Change Orders, designs, or Specifications; or

2. giving directions or instructions, or failing to give them, if that is the primary cause of the injury or damage.

6.21 *Delegation of Professional Design Services*

A. Contractor will not be required to provide professional design services unless such services are specifically required by the Contract Documents for a portion of the Work or unless such services are required to carry out Contractor's responsibilities for construction means, methods, techniques, sequences and procedures. Contractor shall not be required to provide professional services in violation of applicable law.

B. If professional design services or certifications by a design professional related to systems, materials or equipment are specifically required of Contractor by the Contract Documents, Owner and Engineer will specify all performance and design criteria that such services must satisfy. Contractor shall cause such services or certifications to be provided by a properly licensed professional, whose signature and seal shall appear on all drawings, calculations, specifications, certifications, Shop Drawings and other submittals prepared by such professional. Shop Drawings and other submittals related to the Work designed or certified by such professional, if prepared by others, shall bear such professional's written approval when submitted to Engineer.

C. Owner and Engineer shall be entitled to rely upon the adequacy, accuracy and completeness of the services, certifications or approvals performed by such design professionals, provided Owner and Engineer have specified to Contractor all performance and design criteria that such services must satisfy.

D. Pursuant to this Paragraph 6.21, Engineer's review and approval of design calculations and design drawings will be only for the limited purpose of checking for conformance with performance and design criteria given and the design concept expressed in the Contract Documents. Engineer's review and approval of Shop Drawings and other submittals (except design calculations and design drawings) will be only for the purpose stated in Paragraph 6.17.D.1.

E. Contractor shall not be responsible for the adequacy of the performance or design criteria required by the Contract Documents.

6.22 *Daily Reports*

A. Contractor shall complete a daily report on forms provided by Engineer (and approved by Owner) that sets forth the daily progress and status of the Work. The daily report is due at the conclusion of each work day, and shall be signed and submitted by Contractor to Engineer no later than the close of the next working day. Failure to submit the completed daily report by the close of the next working day shall constitute a breach of this Contract. Reports by Subcontractors or others shall be submitted through Contractor.

B. Acceptance of the daily report by the Engineer does not constitute any agreement or acquiescence by Engineer or Owner that the information contained therein is accurate or complete. If the Engineer requests the Contractor to resubmit the daily report with more complete or accurate information, the Contractor shall respond to such requests within 24 hours by resubmitting a revised daily report. The daily report shall set forth the daily progress and status for each component of the Work requested by the Engineer, and shall inform the Engineer of any events, issues or circumstances which Contractor believes may lead Contractor to seek an adjustment in Contract Price or Contract Time. The daily report shall also include applicable delivery tickets, listing all labor, materials, and equipment involved for that day, and other services and expenditures when authorized. In addition to any other information requested by the Engineer on the form, the report shall also:

1. Show names of workers, classifications, and hours worked.

2. Describe and list quantities of materials used.

3. Show type of equipment, size, identification number, and hours of operation, including loading and transportation, if applicable (and noting periods of time when said equipment is out of service, if applicable).

4. Describe other services and expenditures in such detail as the Engineer or Owner may require.

6.23 *Payroll Record of Wages Paid*

A. Contractor shall submit, weekly, a copy of certified payroll records, including those of Subcontractors. Payroll records shall include:

1. each employees showing the full name; address; social security number; work classification; straight time and overtime hours worked each day and week; actual per diem wages paid to each journeyman, apprentice, worker, or other employee employed in connection with the Work; pay rate; itemized deductions made; check number issued; and

2. apprentices and the apprentice-to-journeyman ratio.

B. Each certified payroll shall be accompanied by a statement of compliance, on a form acceptable to the Engineer, signed by the employer or the employer's agent indicating that the payrolls are correct and complete and that the wage rates contained therein are not less than those required by the Contract.

C. The payroll records shall be available for inspection at all reasonable hours at Contractor's principal office upon the basis set forth in Section 1776 of the Labor Code, and Contractor shall comply fully with all of the provisions thereof and of any rules adopted pursuant thereto.

D. In the event of noncompliance with the requirements of such section after 10 days written notice specifying in what respects compliance is required Contractor shall forfeit as a penalty to Owner, $25.00 for each calendar day, or portion thereof, for each worker, until strict compliance is effectuated. Upon the request of the Division of Apprenticeship Standards or the Division of Labor Standards Enforcement, such penalties shall be withheld from progress payments then due.

E. Contractor and each Subcontractor shall preserve their payroll records for a period of 3 years from the date of final payment.

ARTICLE 7 – OTHER WORK AT THE SITE

7.01 *Related Work at Site*

A. Owner may perform other work related to the Project at the Site with Owner's employees, or through other direct contracts therefor, or have other work performed by utility owners. If such other work is not noted in the Contract Documents, then:

1. written notice thereof will be given to Contractor prior to starting any such other work; and

2. if Owner and Contractor are unable to agree on entitlement to or on the amount or extent, if any, of any adjustment in the Contract Price or Contract Times that should

be allowed as a result of such other work, a Claim may be made therefor as provided in Paragraph 10.05.

B. Contractor shall afford each other contractor who is a party to such a direct contract, each utility owner, and Owner, if Owner is performing other work with Owner's employees, proper and safe access to the Site, provide a reasonable opportunity for the introduction and storage of materials and equipment and the execution of such other work, and properly coordinate the Work with theirs. Contractor shall do all cutting, fitting, and patching of the Work that may be required to properly connect or otherwise make its several parts come together and properly integrate with such other work. Contractor shall not endanger any work of others by cutting, excavating, or otherwise altering such work; provided, however, that Contractor may cut or alter others' work with the written consent of Engineer and the others whose work will be affected. The duties and responsibilities of Contractor under this Paragraph are for the benefit of such utility owners and other contractors to the extent that there are comparable provisions for the benefit of Contractor in said direct contracts between Owner and such utility owners and other contractors.

C. If the proper execution or results of any part of Contractor's Work depends upon work performed by others under this Article 7, Contractor shall inspect such other work and promptly report to Engineer in writing any delays, defects, or deficiencies in such other work that render it unavailable or unsuitable for the proper execution and results of Contractor's Work. Contractor's failure to so report will constitute an acceptance of such other work as fit and proper for integration with Contractor's Work except for latent defects and deficiencies in such other work.

7.02 *Coordination*

A. Unless otherwise provided in the Contract Documents, Contractor shall be responsible for coordinating the performance of its Work with the performance of other work on the Project at the Site.

7.03 *Legal Relationships*

A. Paragraphs 7.01.A and 7.02 are not applicable for utilities not under the control of Owner.

B. Each other direct contract of Owner under Paragraph 7.01.A shall provide that the other contractor is liable to Owner and Contractor for the reasonable direct delay and disruption costs incurred by Contractor as a result of the other contractor's wrongful actions or inactions.

Only those contracts between Owner and an independent contractor hired by Owner to perform specific work pursuant to Owner's specifications shall constitute a "direct contract" of Owner under Paragraph 7.01.A. Any contract relating to any facilities owned by a utility, regardless of whether Owner is contracting with the utility company or some other individual or entity authorized to perform work relating to said facilities, does not constitute a "direct contract" of Owner under Paragraph 7.01.A.

C. Contractor shall be liable to Owner and any other contractor under direct contract to Owner for the reasonable direct delay and disruption costs incurred by such other contractor as a result of Contractor's wrongful action or inactions.

7.04 *Claims Between Contractors*

A. Should Contractor cause damage to the work or property of any other contractor at the Site, or should any claim arising out of Contractor's performance of the Work at the Site be made by any other contractor against Contractor, Owner, or Engineer, then Contractor shall (at no cost to Owner or Engineer) either (1) remedy the damage, (2) agree to compensate the other contractor for remedy of the damage, or (3) remedy the damage and attempt to settle with such other contractor by agreement, or otherwise resolve the dispute by arbitration or at law.

B. Contractor shall, to the fullest extent permitted by Laws and Regulations, indemnify and hold harmless Owner and Engineer and the officers, directors, partners, employees, agents and other consultants and subcontractors of each and any of them from and against all claims, costs, losses and damages (including, but not limited to, fees and charges of engineers, architects, attorneys, and other professionals and court and arbitration costs) arising directly, indirectly or consequentially out of any action, legal or equitable, brought by any other contractor against Owner or Engineer to the extent said claim is based on or arises out of Contractor's performance of the Work. Should another contractor cause damage to the Work or property of Contractor or should the performance of work by any other contractor at the Site give rise to any Claim, Contractor shall not institute any action, legal or equitable, against Owner or Engineer or permit any action against any of them to be maintained and continued in its name or for its benefit in any court or before any arbiter which seeks to impose liability on or to recover damages from Owner or Engineer on account of any such damage or Claim.

C. If Contractor is delayed at any time in performing or furnishing the Work by any act or neglect of another contractor, and Owner and Contractor are unable to agree as to the extent of any adjustment in Contract Times attributable thereto, Contractor may make a Claim for an extension of times in accordance with Paragraph 10.05. An extension of the Contract Times shall be Contractor's exclusive remedy with respect to Owner and Engineer for any delay, disruption, interference, or hindrance caused by any other contractor.

ARTICLE 8 – OWNER'S RESPONSIBILITIES

8.01 *Communications to Contractor*

A. Except as otherwise provided in these General Conditions, Owner shall issue all communications to Contractor through Engineer.

8.02 *Replacement of Engineer*

A. In case of termination of the employment of Engineer, Owner shall appoint an engineer whose status under the Contract Documents shall be that of the former Engineer.

8.03 *Furnish Data*

A. Owner shall furnish the data required of Owner under the Contract Documents in a timely manner.

8.04 *Pay When Due*

A. Owner shall make payments to Contractor when they are due as provided in Paragraphs 14.02.C and 14.07.C.

8.05 *Lands and Easements; Reports and Tests*

A. Owner's duties with respect to providing lands and easements are set forth in Paragraph 4.01. Paragraph 4.02 refers to Owner's identifying and making available to Contractor copies of certain reports of explorations and tests of subsurface conditions at or contiguous to the Site, if any, and drawings of physical conditions relating to existing surface or subsurface structures (other than Underground Facilities)at the Site.

8.06 *Insurance*

A. Owner's responsibilities, if any, with respect to purchasing and maintaining liability and property insurance are set forth in Article 5.

8.07 *Change Orders*

A. Owner is obligated to execute Change Orders as indicated in Paragraph 10.03.

8.08 *Inspections, Tests, and Approvals*

A. Owner's responsibility with respect to certain inspections, tests, and approvals is set forth in Paragraph 13.03.B.

8.09 *Limitations on Owner's Responsibilities*

A. The Owner shall not supervise, direct, or have control or authority over, nor be responsible for, Contractor's means, methods, techniques, sequences, or procedures of construction, or the safety precautions and programs incident thereto, or for any failure of Contractor to comply with Laws and Regulations applicable to the performance of the Work. Owner will not be responsible for Contractor's failure to perform the Work in accordance with the Contract Documents.

8.10 *Undisclosed Hazardous Environmental Condition*

A. Owner's responsibility in respect to an undisclosed Hazardous Environmental Condition is set forth in Paragraph 4.06.

8.11 *Blank*

8.12 *Compliance with Safety Program*

A. While at the Site, Owner's employees and representatives shall comply with the specific applicable requirements of Contractor's safety programs of which Owner has been informed pursuant to Paragraph 6.13.D.

ARTICLE 9 – ENGINEER'S STATUS DURING CONSTRUCTION

9.01 *Owner's Representative*

A. Engineer will be Owner's representative during the construction period. The duties and responsibilities and the limitations of authority of Engineer as Owner's representative during construction are set forth in the Contract Documents.

9.02 *Visits to Site*

A. Engineer will make visits to the Site at intervals appropriate to the various stages of construction as Engineer deems necessary in order to observe as an experienced and qualified professional the progress that has been made and the quality of the various aspects of Contractor's executed Work. Based on information obtained during such visits and observations, Engineer, for the benefit of Owner, will determine, in general, if the Work is proceeding in accordance with the Contract Documents. Engineer will not be required to make exhaustive or continuous inspections on the Site to check the quality or quantity of the Work. Engineer's efforts will be directed toward providing for Owner a greater degree of confidence that the completed Work will conform generally to the Contract Documents. On the basis of such visits and observations, Engineer will keep Owner informed of the progress of the Work and will endeavor to guard Owner against defective Work.

B. Engineer's visits and observations are subject to all the limitations on Engineer's authority and responsibility set forth in Paragraph 9.09. Particularly, but without limitation, during or as a result of Engineer's visits or observations of Contractor's Work, Engineer will not supervise, direct, control, or have authority over or be responsible for Contractor's means, methods, techniques, sequences, or procedures of construction, or the safety precautions and programs incident thereto, or for any failure of Contractor to comply with Laws and Regulations applicable to the performance of the Work.

9.03 *Project Representative*

A. An employee of Engineer shall act as a Resident Project Representative to assist Engineer in providing more extensive observation of the Work. The authority and responsibilities of any such Resident Project Representative and assistants shall include the authority to transmit instructions, receive information, and perform other acts Engineer is authorized to perform under the Contract Documents. If Owner designates another representative or agent to represent Owner at the Site who is not Engineer's consultant, agent or employee, the responsibilities and authority and limitations thereon of such other individual or entity will be as provided in the Specifications.

Other duties, responsibilities, and limitations of authority of the Resident Project Representative are located in the written agreement between Engineer and Owner for this specific Project (which agreement may be amended by Engineer and Owner from time to time).

9.04 *Authorized Variations in Work*

A. Engineer may authorize minor variations in the Work from the requirements of the Contract Documents which do not involve an adjustment in the Contract Price or the Contract Times and are compatible with the design concept of the completed Project as a functioning whole as indicated by the Contract Documents. These may be accomplished by a Field Order and will be binding on Owner and also on Contractor, who shall perform the Work involved promptly If Contractor believes that a Field Order should instead have been issued as a Change Order because that Field Order justifies an adjustment in the Contract Price or Contract Times, or both, and the parties are unable to agree on entitlement to or on the amount or extent, if any, of any such adjustment, Contractor's exclusive remedy is set forth in Paragraph 10.05. A notice stating the general nature of such a Claim for adjustment to the Contract Times or Contract Price, as a result of the issuance of a Field Order, shall be submitted by Contractor, under Paragraph 10.05.B, before Contractor performs any portion of the Field Order work for which Contractor believes an adjustment to the Contract Time or Contract Price should be made, unless an emergency comparable to conditions under Paragraph 6.16 requires the performance of the Field Order before such a notice can be submitted by Contractor.

B. Contractor shall acknowledge in writing the receipt of all Field Orders. Contractor’s acknowledgement of receipt does not preclude Contractor from submitting a Claim pursuant to Paragraphs 9.04 and 10.05. The lack of any such acknowledgement does not affect Contractor’s obligation to comply with the Field Order.

9.05 *Rejecting Defective Work*

A. Engineer will have authority to reject Work which Engineer believes to be defective, or that Engineer believes will not produce a completed Project that conforms to the Contract Documents or that will prejudice the integrity of the design concept of the completed Project as a functioning whole as indicated by the Contract Documents. Engineer will also have authority to require special inspection or testing of the Work as provided in Paragraph 13.04, whether or not the Work is fabricated, installed, or completed.

9.06 *Shop Drawings, Change Orders and Payments*

A. In connection with Engineer’s authority, and limitations thereof, as to Shop Drawings and Samples, see Paragraph 6.17.

B. In connection with Engineer’s authority, and limitations thereof, as to design calculations and design drawings submitted in response to a delegation of professional design services, if any, see Paragraph 6.21.

C. In connection with Engineer’s authority as to Change Orders, see Articles 10, 11, and 12.

D. In connection with Engineer's authority as to Applications for Payment, see Article 14.

9.07 *Determinations for Unit Price Work*

A. Engineer will determine the actual quantities and classifications of Unit Price Work performed by Contractor. Engineer will review with Contractor the Engineer's preliminary determinations on such matters before rendering a written decision thereon (by recommendation of an Application for Payment or otherwise). Engineer's written decision thereon will be final and binding (except as modified by Engineer to reflect changed factual conditions or more accurate data) upon Contractor, subject to the provisions of Paragraph 10.05.

9.08 *Decisions on Requirements of Contract Documents and Acceptability of Work*

A. Engineer will be the initial interpreter of the requirements of the Contract Documents and judge of the acceptability of the Work thereunder. Any questions by Contractor arising prior to the date final payment is due relating to the acceptability of the Work, and the interpretation of the requirements of the Contract Documents pertaining to the performance of the Work, will be referred initially to Engineer in writing within 7 days of the event giving rise to the question.

B. Engineer will, with reasonable promptness, render a written decision on any such questions referred by Contractor. If Contractor believes that any such decision entitles it to an adjustment in the Contract Price or Contract Times or both, Contractor's exclusive remedy is set forth in Paragraph 10.05. The date of Engineer's decision shall be the date of the event giving rise to the issues referenced for the purposes of Paragraph 10.05.B. If no written decision is issued by Engineer within 30 days of Contractor's written question(s), a written decision shall be deemed to have been issued on said 30th day by Engineer that resolves every such question raised by Contractor in a manner that would be the most unfavorable to Contractor's position, such that the decision would not entitle Contractor to any adjustment in Contract Price and/or Contract Time.

C. Engineer's written decision on any questions referred by Contractor will be final and binding on Contractor, subject to the provisions of Paragraph 10.05.

9.09 *Limitations on Engineer's Authority and Responsibilities*

A. *Blank*

B. Engineer will not supervise, direct, control, or have authority over or be responsible for Contractor's means, methods, techniques, sequences, or procedures of construction, or the safety precautions and programs incident thereto, or for any failure of Contractor to comply with Laws and Regulations applicable to the performance of the Work. Engineer will not be responsible for Contractor's failure to perform the Work in accordance with the Contract Documents.

C. Engineer will not be responsible for the acts or omissions of Contractor or of any Subcontractor, any Supplier, or of any other individual or entity performing any of the Work.

D. Engineer's review of the final Application for Payment and accompanying documentation and all maintenance and operating instructions, schedules, guarantees, bonds, certificates of inspection, tests and approvals, and other documentation required to be delivered by Paragraph 14.07.A will only be to determine generally that their content complies with the requirements of, and in the case of certificates of inspections, tests, and approvals that the results certified indicate compliance with, the Contract Documents.

E. The limitations upon authority and responsibility set forth in this Paragraph 9.09 shall also apply to the Resident Project Representative, if any, and assistants, if any.

9.10 *Compliance with Safety Program*

A. While at the Site, Engineer's employees and representatives shall comply with the specific applicable requirements of Contractor's safety programs of which Engineer has been informed pursuant to Paragraph 6.13.D.

9.11 *Lines and Grades*

A. Engineer's duties with respect to providing stakes and marks are set forth in Paragraph 4.05.

ARTICLE 10 – CHANGES IN THE WORK; CLAIMS

10.01 *Authorized Changes in the Work*

A. Without invalidating the Contract and without notice to any surety, Owner may, at any time or from time to time, order additions, deletions, or revisions in the Work by a Change Order, or a Work Change Directive. Upon receipt of any such document, Contractor shall promptly proceed with the Work involved which will be performed under the applicable conditions of the Contract Documents (except as otherwise specifically provided in the Change Order or Work Change Directive).

B. If Owner and Contractor are unable to agree on entitlement to, or on the amount or extent, if any, of an adjustment in the Contract Price or Contract Times, or both, that should be allowed as a result of a Work Change Directive, a Claim may be made by Contractor as provided in Paragraph 10.05.

C. If, after issuance of a Work Change Directive, the Owner and Contractor do not agree on the appropriate adjustment in Contract Price and/or Contract Times, if any, that should be allowed as a result of the Work Change Directive, the Owner may issue a Unilateral Change Order stating the adjustment, if any, that is being made to the Contract Price and/or Contract Times as a result of the Work Change Directive. If Contractor believes it is entitled to any further adjustment in Contract Price and/or Contract Time, or any other relief, as a result of the Work Change Directive, Contractor's exclusive remedy is set forth in Paragraph 10.05.

10.02 *Unauthorized Changes in the Work*

A. Contractor shall not be entitled to an increase in the Contract Price or an extension of the Contract Times with respect to any work performed that is not required by the Contract Documents as amended, modified, or supplemented as provided in Paragraph 3.04, except in the case of an emergency as provided in Paragraph 6.16 or in the case of uncovering Work as provided in Paragraph 13.04.D.

10.03 *Execution of Change Orders*

A. Owner, Agency and Contractor shall execute appropriate Change Orders recommended by Engineer covering:

1. changes in the Work which are: (i) ordered by Owner pursuant to Paragraph 10.01.A, (ii) required because of acceptance of defective Work under Paragraph 13.08.A or Owner's correction of defective Work under Paragraph 13.09, or (iii) agreed to by the parties;

2. changes in the Contract Price or Contract Times which are agreed to by the parties, including any undisputed sum or amount of time for Work actually performed in accordance with a Work Change Directive; and

B. A Change Order that adjusts the Contract Price, or the Contract Time, or both, shall be accomplished only by a written and executed Change Order. Accordingly, no course of conduct or dealings between the parties, no expressed or implied acceptance of alterations or additions to the Work, and no assertion that Owner has been unjustly enriched by any alterations or additions to the Work shall be the basis for an increase in any amount due under the Contract Documents or in any time period provided for in the Contract Documents, unless executed as a Change Order under this Paragraph 10.03. A Bilateral Change Order shall constitute a final settlement of all matters relating to the change in the Work that is the subject of the Change Order, including, but no limited to, all direct and indirect costs associated with such change and any and all adjustments to the Contract Price and the Contract Times.

C. Whenever an adjustment in Contract Price and/or Contract Times is warranted under the Contract Documents, but the Owner and Contractor cannot agree to the amount of adjustment, if any, that should be allowed to the Contract Price and/or Contract Times, the Owner may issue a Unilateral Change Order stating the adjustment, if any, that is being made to the Contract Price and/or Contract Times. If any unilateral adjustment to the Contract Price and/or Contract Times is not acceptable to Contractor for any reason, including any argument that an adjustment to the Contract Price and/or Contract Times was not warranted by the Contract Documents, the Contractor's exclusive remedy is to follow the Claim process set forth in Paragraph 10.05. A Unilateral Change Order may be jointly signed by the Engineer, but the Engineer's signature is not required. Unless otherwise obligated under applicable law, the Owner is not obligated to issue a Unilateral Change Order.

D. In the event a Change Order increases the Contract Price, Contractor shall include the Work covered by such Change Order in applications for payments as if such Work were originally part of the Agreement.

10.04 *Notification to Surety*

A. If the provisions of any bond require notice to be given to a surety of any change affecting the general scope of the Work or the provisions of the Contract Documents (including, but not limited to, Contract Price or Contract Times), and such notice has not been consented to in advance by the surety, the giving of any such notice will be Contractor's responsibility. It shall be Contractor's responsibility to ensure that the amount of each applicable bond is adjusted to reflect the effect of any such change.

10.05 *Claims*

A. *Mandatory Procedure and Condition Precedent.*

1. Any demand or assertion by Contractor seeking an adjustment of Contract Price and/or Contract Times, or other relief, for any reason whatsoever, must be in strict compliance with the requirements of this Paragraph 10.05. For purposes of this Paragraph 10.05, any and all work relating to any such demand or assertion shall be referred to as "Disputed Work", regardless of whether the basis of the demand or assertion arises from an interpretation of the Contract Documents, an action or inaction of Contractor, Engineer or Owner, or any other event, issue, or circumstance. In order for any such demand or assertion to qualify as a "Claim", it must strictly comply with the provisions of this Paragraph 10.05. Contractor shall bear all costs incurred in complying with the provisions of this Paragraph 10.05.

2. The requirements set forth in this Paragraph 10.05 are mandatory, and Contractor shall strictly comply with these requirements. Strict compliance with these requirements is a condition precedent to Contractor's ability to exercise any rights or remedies that may otherwise be available to Contractor under the Contract Documents or any applicable Laws or Regulations relating to the Claim. No action or inaction by Contractor, Owner, and/or Engineer to try to resolve any Claim(s) through agreement (including Change Order), mediation, settlement, or any other means shall excuse Contractor from strictly complying with the requirements of this Paragraph 10.05. Notwithstanding any other language in the Contract Documents that permits Contractor to submit a Claim under Paragraph 10.05 in the event Contractor, Engineer, and/or Owner are unable to reach an agreement on any particular issue, Contractor shall strictly comply with requirements of this Paragraph 10.05, and shall not delay compliance with any requirements herein on the grounds that Contractor, Engineer, and/or Owner were trying to reach an agreement on any issue relating to the Claim.

3. Contractor's strict compliance with the requirements of this Paragraph 10.05 serves the important purpose of facilitating the Owner's management of its budget, and Contractor's strict compliance with this Paragraph 10.05 provides the Owner with the prompt notice of potential and actual Claims needed for budget management purposes. This Paragraph 10.05 also serves the important public purpose of providing the Owner a means of verifying the basis for the expenditure and/or reduction of the public funds or resources sought by a Claim. Another purpose of the requirements in this Paragraph 10.05 is to promptly provide Engineer and

Owner with information that may enable Owner and Contractor to resolve Contractor's Claim through a Bilateral Change Order.

4. Contractor's compliance with the provisions of this Paragraph 10.05 shall not excuse Contractor's failure to comply with any other provisions of the Contract Documents, including but not limited to, any provisions relating to Contractor's obligation to provide any notice, documentation, inspections, Site access, or any other requirements relating to any event, issue, or circumstance (including, but not limited to, any documentation required by Paragraph 11.01.D). Contractor's compliance with the provisions of this Paragraph 10.05 shall not excuse Contractor's failure to provide notice of any event, issue, or circumstance, or to perform any other duties expressed or implied in Contract Documents, at the time Contractor reasonably should have been aware of the event, issue, or circumstance. Nothing in this Paragraph 10.05 shall extend any time deadlines provided in any other provisions in the Contract Documents.

5. Pursuant to the Claim requirements set forth in this Paragraph 10.05, the Contractor's submittal of an Initial Notice of Potential Claim, Supplemental Notice of Potential Claim, and updated Supplemental Notices of Potential Claim will provide the Contractor and Engineer multiple opportunities to meet and confer regarding a potential Claim before it becomes a final Claim. In addition to the important public purpose of providing a means of verifying the basis for the expenditure and/or reduction of public resources sought by a Claim, the notice and reporting requirements imposed upon Contractor under this Paragraph 10.05 promote regular, periodic communications of updated information regarding a potential claim before it becomes a final claim so that final claims can be processed more efficiently. Such communication may also help facilitate resolution of the potential Claim. If Contractor or Engineer request an informal conference to discuss a potential Claim, such a conference may be held at a mutually convenient time. Once a Notice of Final Claim is filed, Paragraph 10.05.E. shall govern the scheduling of any informal conference to meet and confer for settlement of the Claim. No action or inaction by Contractor, Engineer, and/or Owner relating to any conference to discuss a potential or final Claim shall excuse Contractor from strictly complying with the requirements of this Paragraph 10.05.

6. For Claims less than or equal to $375,000, Paragraphs 10.05 and 10.06 shall be interpreted in a manner consistent with Public Contract Code sections 20104 and 20104.2. The substance of Public Contract Code sections 20104 and 20104.2 have been incorporated into Paragraphs 10.05 and 10.06 in a manner that is consistent with the notice requirements provided in the Contract Documents.

B. Initial Notice of Potential Claim.

Promptly upon becoming aware of any event, issue, or circumstance which Contractor believes provides a basis for an adjustment of Contract Price and/or Contract Times, or other relief, Contractor shall provide a signed written Initial Notice of Potential Claim to Engineer and Owner. The Initial Notice of Potential Claim shall be submitted before commencing any Disputed Work, or within 7 days of the event, issue, or circumstance from which the Claim arises, whichever is earlier.

The Initial Notice of Potential Claim shall clearly state the Contractor's grounds for seeking an adjustment in Contract Price and/or Contract Times or other relief, the nature and circumstances of the Disputed Work, the relief or adjustment sought by Contractor, and a cost proposal for the Disputed Work. The Initial Notice of Potential Claim shall be submitted on a form furnished by the Engineer (and approved by Owner) and shall be certified under penalty of perjury with reference to the California False Claims Act, Government Code Sections 12650-12655. Contractor shall assign an exclusive identification number for each potential Claim, determined by chronological sequencing, based on the date of the potential Claim. The nature and circumstances involved in the dispute shall remain consistent throughout the processing of the Claim.

The exclusive identification number for each Claim shall be used on the following corresponding documents:

1. Initial Notice of Potential Claim.

2. Supplemental Notice of Potential Claim.

3. Notice of Final Claim.

4. Contractor's written statement of Claims under Paragraph 14.07.A.2.

After reviewing Contractor's initial notice, Engineer may provide a written response thereto or may decide to delay providing a response until Contractor provides further information regarding the potential Claim pursuant to the provisions of this Paragraph 10.05. No response by Engineer that could be interpreted as suggesting that Contractor is entitled to an increase Contract Price or Contract Time is binding upon Owner unless Owner has co-signed the response.

C. *Supplemental Notice of Potential Claim:* Within 15 days of submitting the Initial Notice of Potential Claim, Contractor shall provide a signed Supplemental Notice of Potential Claim to Engineer and Owner that provides the following information:

1. The complete nature and circumstances of the dispute which caused the potential Claim.

2. The contract provisions that provide the basis of the potential Claim.

3. The requested adjustment of Contract Price, if any, and the estimated cost of the potential Claim, including an itemized breakdown of individual costs and how each estimate was determined.

4. The requested adjustment of Contract Time, if any, and a time impact analysis of the Progress Schedule that illustrates the effect on the scheduled completion date due to schedule changes or disruptions.

The information provided by Contractor shall provide Contractor's complete reasoning for additional compensation or adjustments and shall be as complete as reasonably possible.

The Supplemental Notice of Potential Claim shall be submitted on a form furnished by Engineer (and approved by Owner) and shall be certified under penalty of perjury with reference to the California False Claims Act, Government Code Sections 12650-12655. If at any time the estimated cost of the potential Claim or effect on the Progress Schedule changes, Contractor shall update information in items 3 and 4 above as soon as the change is recognized and submit this information to Engineer.

If the Disputed Work is not completed within 30 days, then Contractor shall, every 30 days until the Disputed Work ceases, submit to Engineer and Owner an updated Supplemental Notice of Potential Claim that shall update and quantify all of the information required in the Supplemental Notice of Potential Claim. Contractor's failure to so quantify costs and schedule impacts every 30 days shall result in a waiver of the Claim for that 30-day period. Any supplemental notice or updated notice that states that the requested adjustment of Contract Price and/or Contract Time will be provided or determined at a later date, or that any damages, costs, schedule impacts, and/or any other analysis will be provided or determined at a later date, shall be deemed to be not in compliance with this Paragraph 10.05, and shall result in Contractor waiving its Claim.

After reviewing the Contractor's Supplemental Notice of Potential Claim or updated Supplemental Notice of Potential Claim, Engineer may provide a written response thereto or may decide to delay providing a response until Contractor provides further information regarding the potential Claim pursuant to the provisions of this Paragraph 10.05. No response by Engineer that could be interpreted as suggesting that Contractor is entitled to an increase Contract Price or Contract Time is binding upon the Owner unless Owner has co-signed the response.

D. Notice of Final Claim.

As soon as reasonably practical upon completion of the Disputed Work, and no later than 30 days after completion of the Disputed Work, Contractor shall provide to Engineer and Owner a Notice of Final Claim containing a full and final documentation of the Claim that provides the following information:

1. A detailed factual narration of events fully describing the nature and circumstances that caused the dispute, including, but not limited to, necessary dates, locations, and items of Work affected by the dispute.

2. The specific provisions of the Contract that support the Claim and a statement of the reasons these provisions support and provide a basis for entitlement of the Claim.

3. When additional monetary compensation is requested, the exact amount requested calculated in conformance with the Contract Documents and shall include an itemized breakdown of individual costs. These costs shall be segregated into the following cost categories:

a. Labor – A listing of individuals, classifications, regular hours and overtime hours worked, dates worked, hourly labor rates, and other pertinent information related to the requested reimbursement of labor costs.

b. Materials – Invoices, purchase orders, location of materials either stored or incorporated into the work, dates materials were transported to the project or incorporated into the work, and other pertinent information related to the requested reimbursement of material costs.

c. Equipment – Listing of detailed description (make, model, and serial number), hours of use, dates of use, and equipment rates. Equipment rates shall be at the applicable State rental rate as listed in the Department of Transportation publication entitled "Labor Surcharge and Equipment Rental Rates," in effect when the Disputed Work was performed.

d. Other categories as specified by Contractor or Engineer.

4. When an adjustment of Contract Time is requested the following information shall be provided:

   a. The chronology of the specific dates for which Contract Time is being requested.

   b. The specific reasons for entitlement to a Contract Time adjustment.

   c. The specific provisions of the Contract that provide the basis for the requested Contract Time adjustment.

   d. A detailed time impact analysis of the Progress Schedule. The time impact analysis shall show the effect of changes or disruptions on the scheduled completion date to demonstrate entitlement to a Contract Time adjustment.

5. The listing, identification, and production of copies of all documents Contractor believes support its Claim and the date, time, circumstances, details and substance of any oral communications that Contractor believes support the Claim.

   The Notice of Final Claim shall be submitted on a form furnished by Engineer (and approved by Owner) and shall be certified under penalty of perjury with reference to the California False Claims Act, Government Code Sections 12650-12655.

   Contractor shall include all pertinent information, references, arguments, and data supporting its Claim in the Notice of Final Claim. Information submitted subsequent to the Notice of Final Claim will not be considered. No Notice of Final Claim will be considered that does not have the same nature and circumstances, and basis of Claim as those specified on the Initial and Supplemental Notices of Potential Claim.

E. *Response to Notice of Final Claim.*

1. *Engineer's Authority to Respond to Claim*. Engineer will evaluate the information and documentation presented in the Notice of Final Claim and provide a written response to Contractor. Engineer may issue a written response denying the Claim, but Owner's signature is required on any response granting any part of the Claim.

   A Claim may be granted in whole or in part only by a written response that contains a signature of an authorized officer or employee of Owner acknowledging Owner's approval of the response. A response unsigned by Owner that grants in whole or in part any part of a Claim is invalid and not binding on the Owner. In the event a valid written decision is not provided to Contractor within the time prescribed in this Paragraph 10.05, the Claim shall be deemed denied on the last day a written response was due. The date upon which the Claim is approved or denied pursuant to the provisions of this Paragraph 10.05, shall constitute the date of the final decision on the Claim under the provisions of this Paragraph 10.05. The date of the final decision on a Claim can only be changed by a subsequent writing signed by Engineer and Owner that expressly states that the date of the final decision on the Claim has been changed to a new specific date.

2. *For Claims of less than $50,000*. For Claims of less than fifty thousand dollars ($50,000), the Engineer shall respond in writing to the Notice of Final Claim within 45 days of receipt thereof, or may request, in writing, within 30 days of said receipt, any additional documentation relating to the Claim or any defenses to the Claim the Owner may have against the Contractor. Contractor shall comply with the request within the reasonable time deadlines provided by Engineer in the request. If additional information is thereafter required, it shall be requested and provided upon mutual agreement of the Owner and the Contractor. The written response to the Notice of Final Claim shall be submitted to the Contractor within 15 days after receipt of the further documentation or within a period of time no greater than that taken by the Contractor in producing the additional information, whichever is greater.

3. *For Claims Over $50,000 and Less Than or Equal to $375,000*. For Claims of over fifty thousand dollars ($50,000) and less than or equal to three hundred seventy-five thousand dollars ($375,000), the Engineer shall respond in writing to the Notice of Final Claim within 60 days of receipt thereof, or may request, in writing, within 30 days of said receipt, any additional documentation relating to the Claim or any defenses to the Claim the Owner may have against the Contractor. Contractor shall comply with the request within the reasonable time deadlines provided by Engineer in the request. If additional information is thereafter required, it shall be requested and provided upon mutual agreement of the Owner and the Contractor. The written response to the Notice of Final Claim shall be submitted to the Contractor within 30 days after receipt of the further documentation, or within a period of time no greater than that taken by the Contractor in producing the additional information or requested documentation, whichever is greater.

4. *For Claims Less Than or Equal to $375,000*. For Claims less than or equal to $375,000, if the Contractor disputes the written response to the Claim, or if a written response is not submitted within the time prescribed above, the Contractor may so notify the Engineer and Owner, in writing, either within 15 days of receipt of the written response or within 15 days of the Engineer's failure to respond within the time prescribed, respectively, and demand an informal conference to meet and confer for settlement of the issues in dispute. Upon such a timely demand by Contractor, the Engineer and Owner shall schedule a meet and confer conference within 30 days for settlement of the dispute. Within 30 days after such conference, a final written response to the Claim shall be issued which will serve as the new final decision on the Claim. Pursuant to Public Contract Code section 20104.6, the Owner shall not fail to pay money as to any portion of a Claim which is undisputed, except as otherwise provided in the Contract Documents.

5. *For Claims Greater Than $375,000.* For Claims over three hundred seventy-five thousand dollars ($375,000), the Engineer shall respond in writing to the Notice of Final Claim within 60 days of receipt thereof Claim, or may request, in writing, within 45 days of said receipt, any additional information or documentation relating to the Claim or any defenses to the Claim the Owner may have against the Contractor. Contractor shall comply with the request within the reasonable time deadline provided by Engineer in the request. If any additional information is thereafter requested by Engineer, it shall likewise be provided by Contractor within the reasonable time deadline provided by Engineer in such follow-up request. The written response to the Notice of Final Claim shall be submitted to the Contractor within 30 days after receipt of such further information and documentation, or within a period of time no greater than that taken by the Contractor in producing the additional information or documentation, whichever is greater. Contractor may request an informal conference to meet and confer for settlement of the issues in dispute, but Contractor shall have no right to demand such a conference. Neither the requesting of any such conference by Contractor, Engineer or Owner, nor the holding of such conference shall affect the date of the final decision on the Claim. No written communications of Engineer and/or Owner sent to Contractor after any such conference will change the date of the final decision on the Claim unless the writing expressly states that the date of the final decision is being changed to a new specific date.

F. *Contractor's Continuing Obligations.*

1. At all times during the processing of Contractor's potential or final Claim, Contractor shall diligently proceed with the performance of the Disputed Work and other Work, unless otherwise specified or directed by Engineer.

2. Contractor shall provide Owner and Engineer the opportunity to examine the Site of the Disputed Work as soon as reasonably possible, and in no event later than 5 days from the date of the Initial Notice of Potential Claim. Throughout the processing of Contractor's potential or final Claim, Contractor shall provide Owner and Engineer a reasonable opportunity to examine the Site of the Disputed Work within 5 days of the date of Owner's or Engineer's written request therefor.

3. Contractor shall promptly respond to any requests for further information or documentation regarding Contractor's potential or final Claim. If Contractor fails to provide an adequate written response to Engineer or Owner within 15 days of Engineer's or Owner's written request for such further documentation or information, Contractor shall be deemed to have waived its Claim. If the further documentation or information requested by Owner or Engineer would, in the opinion of the Engineer, reasonably take the Contractor more than 15 days to comply with, the written request shall provide the Contractor a specific response deadline that is commensurate to a reasonable response time.

4. Throughout the performance of the Disputed Work, Contractor shall maintain records that provide a clear distinction between the incurred direct costs of Disputed Work and other Work. Contractor shall allow Owner and Engineer access to Contractor's Project records deemed necessary by Owner or Engineer to evaluate the potential or final Claim within 15 days of the date of Owner or Engineer's written request. Contractor's failure to comply with the provision of this Paragraph 10.05 shall constitute a waiver of the Contractor's Claim.

5. All Subcontractor and Supplier claims of any type shall be brought only through Contractor pursuant to the provisions of this Paragraph 10.05. Under no circumstances shall any Subcontractor or Supplier make any direct claim against Owner.

6. Except where provided by law, or elsewhere in these Contract Documents (if applicable), OWNER SHALL NOT BE LIABLE FOR SPECIAL OR CONSEQUENTIAL DAMAGES, AND CONTRACTOR SHALL NOT INCLUDE THEM IN ITS CLAIMS. Contractor shall be limited in its recovery on any Claim(s) to the adjustments allowed in Articles 11 and 12 of the Contract Documents.

7. During each step in the processing of Contractor's Claim, each notice shall be accompanied by Contractor's written statement that the adjustment or relief claimed is the entire adjustment or relief to which the claimant believes it is entitled as a result of the event, issue, or circumstance giving rise to the Claim.

8. Contractor shall be responsible for providing written evidence of the date any of the notices referenced in paragraphs 10.05.B through 10.05.C above were provided to Engineer and Owner, and shall provide Engineer and Owner a copy of such written evidence within 5 days of a request thereof. Such evidence shall be either a written receipt of actual delivery from U.S. Postal Service or other reputable delivery service, or by the recipient's written acknowledgement of receipt.

9. The rights of Owner and Engineer to request further records, documents, or information from Contractor regarding a Claim are for the sole benefit of Owner and Engineer, and may be exercised at their sole discretion. Any failure by Owner and/or Engineer to exercise their rights does not provide the Contractor any excuse for not providing all of the records, documents, and other information it is requested

to provide under Paragraph 10.05 or any other provision of the Contract Documents.

10. Under no circumstances may Contractor submit an Initial Notice of Potential Claim, Supplemental Notice of Potential Claim, or Final Notice of Potential Claim after the date of final payment.

G. *Exclusive Remedy.*

1. The administration of a Claim as provided in this Paragraph 10.05, including Contractor's performance of its duties and obligations specified in this Paragraph 10.05 is Contractor's sole and exclusive remedy for disputes of all types pertaining to the payment of money, extension of time, the adjustment or interpretation of the Contract Documents terms or other contractual or tort relief arising from Contract Documents. This exclusive remedy and the limitation of liability (expressed herein and elsewhere throughout the Contract Documents) apply notwithstanding the completion, termination, suspension, cancellation, breach, or rescission of the Work or Contract Documents, the negligence or strict liability of Owner, its representatives, consultants, or agents, or the transfer of Work or the Project to Owner for any reason whatsoever.

2. Contractor waives and covenants not to raise any claims of waiver, estoppel, release, bar, or any other type of excuse for non-compliance with these Paragraph 10.05 requirements. Compliance with the procedures described in this Paragraph 10.05 is a condition precedent to the right to file a Government Code Claim, commence litigation, or commence any other legal action. Claim(s) or issue(s) not raised in a timely Claim submitted under this Paragraph 10.05 may not be asserted in any subsequent Government Code Claim, litigation, or legal action. Owner shall not be deemed to waive any provision under this Paragraph 10.05, if at Owner's sole discretion, a claim is administered in a manner not in accordance with this Paragraph 10.05.

10.06 *Other Requirements Relating to Claims*

A. *Government Code Claim Requirements:*

For all Claims not resolved as a result of the Paragraph 10.05 procedures, Contractor must submit each Claim in a Government Code Section 910 form of claim for final investigation and consideration of its settlement prior to initiation of any litigation on any such Claim, as required by Government Code Section 945.4. Pursuant to Government Code Section 930.2, the one-year period in Government Code Section 911.2 is hereby reduced to 150 days. This time deadline is measured from the accrual date of each separate cause of action.

B. *Tolling.*

1. For each unresolved Claim properly processed by Contractor in accordance with Paragraph 10.05, the running of the period of time within which a Government Code claim must be submitted shall be tolled during the time the Contractor is

processing the Claim in compliance with Paragraph 10.05. Under no circumstances shall the time for submitting a Government Code Claim be extended beyond 150 days of the date of the final decision on the Claim under Paragraph 10.05. Contractor waives the right to pursue or submit any Claims not processed in accordance with Paragraph 10.05.

2. Other than as expressly provided in Paragraph 10.06.B.1., the time deadline for filing a Government Code claim shall not be tolled by any action or inaction by Contractor, Engineer or Owner, including but not limited to any action or inaction to try to resolve the Claim through negotiation, mediation, settlement, agreement (including Change Order), or by any other means, other than by a separate written tolling agreement expressly approved as to form (on the face of the agreement) by the County Counsel's Office of Owner.

ARTICLE 11 – COST OF THE WORK; ALLOWANCES; UNIT PRICE WORK

11.01 *Cost of the Work*

A. *Costs Included:* The term Cost of the Work means the sum of all costs, except those excluded in Paragraph 11.01.B, necessarily incurred and paid by Contractor in the proper performance of the extra work. When the value of any extra work covered by a Change Order is determined on the basis of Cost of the Work, or when a Claim for an adjustment in Contract Price is determined on the basis of Cost of the Work, the costs to be reimbursed to Contractor will be only those additional or incremental costs required because of the change in the Work or because of the event giving rise to the Claim. Except as otherwise may be agreed to in writing by Owner, such costs shall be in amounts no higher than those prevailing in the locality of the Project, shall not include any of the costs itemized in Paragraph 11.01.B, and shall include only the following items:

1. The cost of labor for the workers, under schedules of job classifications agreed upon by Owner and Contractor (including foreman when authorized in writing by Engineer), used in the actual and direct performance of the extra work. The cost of labor, whether the employer is Contractor, Subcontractor, or other forces, will be the sum of the following:

   a. The actual wages paid (including basic hourly wage, health and welfare, pension, vacation, training, and other State and Federal recognized fringe benefit payments)

   b. The employer labor surcharge, as set forth in the Department of Transportation publication entitled Labor Surcharge and Equipment Rental Rates which is in effect on the date upon which the extra work is accomplished and which is part of this Contract, constituting full compensation for worker's compensation insurance, social security contributions, Medicare, federal unemployment insurance, state unemployment insurance, and state training taxes; and

   c. Subsistence and travel allowances paid to the workers.

2. Cost of all materials necessarily furnished and incorporated in the extra work, including costs of transportation and storage thereof, and Suppliers' field services required in connection therewith. All cash discounts shall accrue to Contractor unless Owner deposits funds with Contractor with which to make payments, in which case the cash discounts shall accrue to Owner. All trade discounts, rebates and refunds and returns from sale of surplus materials and equipment shall accrue to Owner, and Contractor shall make provisions so that they may be obtained.

   The cost of materials will be the cost to the purchaser, whether Contractor, Subcontractor, or other forces, from the supplier thereof, except as the following are applicable:

   a. If materials are procured by the purchaser by any method which is not a direct purchase from and a direct billing by the actual supplier to the purchaser, the cost of those materials shall be deemed to be the price paid to the actual supplier plus the actual costs, if any, incurred in the handling of the materials.

   b. If the materials are obtained from a supply or source owned wholly or in part by the purchaser, the cost of those materials shall not exceed the price paid by the purchaser for similar materials furnished from that source on contract items or the current wholesale price for those materials delivered to the Project Site, whichever price is lower.

   c. If the cost of the materials is, in the opinion of Engineer, excessive, then the cost of the material shall be deemed to be the lowest current wholesale price at which the materials were available in the quantities concerned delivered to the Project Site, less any discounts as provided in this paragraph.

   d. If Contractor does not furnish satisfactory evidence of the cost of the materials from the actual supplier thereof within 60 days after the date of delivery of the material or within 15 days after acceptance of the Contract, whichever occurs first, the Owner reserves the right to establish the cost of the materials at the lowest current wholesale prices at which the materials were available in the quantities concerned delivered to the location of the Work, less any discounts as provided in this paragraph.

   e. The Owner reserves the right to furnish materials for the extra work and no request for Change Order or Claim will be allowed by Contractor for costs and profit on such materials.

3. Costs of special work or services are defined as that work characterized by extraordinary complexity, sophistication, innovation, or a combination of the foregoing attributes which are unique to the construction industry. When Engineer and Contractor, by agreement, determine that a special service on an item of extra work cannot be performed by Contractor's forces or those of any of its Subcontractors, that service or extra work item may be performed by a specialist. Payment for special services work will be subject to the following:

   a. Invoices for the service or item of extra work on the basis of the current market price thereof may be accepted without complete itemization of labor, material,

and equipment rental costs when it is impracticable and not in accordance with the established practice of the special service industry to provide a complete itemization;

b. In those instances wherein Contractor is required to perform extra work necessitating a fabrication or machining process in a fabrication or machine shop facility away from the Project Site, the charges for that portion of the extra work performed in the facility may, by agreement, be accepted as a special service and accordingly, the invoices for the work may be accepted without detailed itemization; and

c. All invoices for special services will be adjusted by deducting all cash or trade discounts offered or available, whether or not the discount may have been taken. An allowance 15 percent will be added to invoices for special services, in lieu of the percentages provided in Paragraph 12.01.C.

4. Equipment: Cost of equipment necessarily used in the performance of the extra work will be paid at the rental rates listed for that equipment in the Department of Transportation publication entitled Labor Surcharge And Equipment Rental Rates, which is in effect on the date upon which the work is accomplished and which is a part of this Contract, regardless of ownership and any rental or other agreement, if they may exist, for the use of that equipment entered into by Contractor, except that for those pieces of equipment with a rental rate of $10.00 per hour or less as listed in the Labor Surcharge And Equipment Rental Rates publication and which are rented from a local equipment agency, other than Contractor owned, Contractor will be paid at the hourly rate shown on the rental agency invoice or agreement for the time used on the extra work as provided in this paragraph. If a minimum equipment rental amount is required by the local equipment rental agency, the actual amount charged will be paid to Contractor. If it is deemed necessary by Engineer to use equipment not listed in the Labor Surcharge And Equipment Rental Rates publication, a suitable rental rate for that equipment will be established by Contractor. If the rental rate established by Contractor is $10.00 per hour or less, the provisions above concerning rental of equipment from a local equipment agency shall apply. Payment for equipment shall be subject to the following:

a. The rental rates shall include the cost of fuel, oil, lubrication, supplies, small tools, necessary attachments, repairs and maintenance of any kind, depreciation, storage, insurance and all incidentals.

b. Operators of rented equipment will be paid for as provided in Paragraph 11.01.A.1.

c. All equipment shall, in the opinion of Engineer, be in good working condition and suitable for the purpose for which the equipment is to be used.

d. Unless otherwise specified, manufacturer's ratings and manufacturer approved modifications shall be used to classify equipment for the determination of applicable rental rates. Equipment which has no direct power unit shall be

powered by a unit of at least the minimum rating recommended by the manufacturer.

e. Individual pieces of equipment or tools not listed in the Labor Surcharge and Equipment Rental Rate publication and having a replacement value of $500 or less, whether or not consumed by use, shall be considered to be small tools and no payment will be made therefor.

f. Rental time will not be allowed while equipment is inoperative due to breakdowns.

5. Equipment at the Work Site: The rental time to be paid for equipment on the Site at the time required to perform the extra work will be the time the equipment is in productive operation on the extra work being performed and, in addition, will include the time required to move the equipment to the location of the extra work and return it to the original location (or to another location requiring no more time than that required to return it to its original location); except that moving time will not be paid if the equipment is used at the site of the extra work on other than the extra work. Loading and transporting cost will be allowed, in lieu of moving time, when the equipment is moved by means other than its own power, except that no payment will be made for loading and transporting costs when the equipment is used at the site of the extra work on other than extra work. The rental time of equipment on the Site operated to perform the extra work will be computed subject to the following:

a. Hourly rates are paid in 1/2-hour increments

b. Daily rates are paid in 1/2-day increments.

c. Payment for the equipment will be made in accordance with the provisions in Paragraph 11.01.A.4;

B. *Costs Excluded:* The term Cost of the Work shall not include any of the following items:

1. Payroll costs and other compensation of Contractor's officers, executives, principals (of partnerships and sole proprietorships), general managers, safety managers, engineers, architects, estimators, attorneys, auditors, accountants, purchasing and contracting agents, expediters, timekeepers, clerks, and other personnel employed by Contractor, whether at the Site or in Contractor's principal or branch office for general administration of the Work and not specifically included in the agreed upon schedule of job classifications referred to in Paragraph 11.01.A.1 or specifically covered by Paragraph 11.01.A.4, all of which are to be considered administrative costs covered by the Contractor's fee.

2. Expenses of Contractor's principal and branch offices other than Contractor's office at the Site.

3. Any part of Contractor's capital expenses, including interest on Contractor's capital employed for the Work and charges against Contractor for delinquent payments.

4. Costs due to the negligence of Contractor, any Subcontractor, or anyone directly or indirectly employed by any of them or for whose acts any of them may be liable, including but not limited to, the correction of defective Work, disposal of materials or equipment wrongly supplied, and making good any damage to property.

5. Other overhead or general expense costs of any kind and the costs of any item not specifically and expressly included in Paragraphs 11.01.A.

6. Cost of premiums for all Bonds and for all insurance whether or not Contractor is required by the Contract Documents to purchase and maintain the same (except for the cost of premiums covered by Paragraph 11.01.C.

7. Costs associated with the preparation or submittal of any requests for Change Orders (whether or not ultimately authorized), cost estimates, Claims.

8. Contractor's expenses associated with anticipated lost profits or lost revenue, lost income or earnings, lost interest or earnings or unpaid retention.

9. Costs of special consultants or attorneys, whether or not in the direct employ of Contractor, employed for services specifically related to the submittal or resolution of a Claim, dispute, or other matter relating to the acceptability of the Work.

C. *Contractor's Fee:* When all the Work is performed on the basis of cost-plus, Contractor's fee shall be determined as set forth in the Agreement. When the value of any Work covered by a Change Order or when a Claim for an adjustment in Contract Price is determined on the basis of Cost of the Work, Contractor's fee shall be determined as set forth in Paragraph 12.01.C.

D. *Documentation:* Whenever the Cost of the Work for any purpose is to be determined pursuant to Paragraphs 11.01.A and 11.01.B, Contractor shall submit to Engineer a daily extra work report, on a form acceptable to Engineer, which provides an itemized cost breakdown together with supporting data, at the end of the week.

11.02 *Allowances*

A. Any allowances provided for in the Contract Documents are for the sole use of Owner to cover the costs of certain types of extra work that may need to be performed as part of the Project. The allowance may be used in whole, in part, or not at all as determined by Owner and Engineer. No portion of any sum of money designated as an allowance shall become due or payable to the Contractor unless there is a Change Order specifically allocating a portion of an allowance to the work described in the Change Order. All such work will be considered extra work that was not included in the original Contract, but which has been provided for as an allowance.

B. Notwithstanding 11.02.A. above, the allowance for "SupplementalWork (Flagging and supplemental Traffic Control)" shall not be limited to only extra work.

C. Prior to final payment, an appropriate Change Order will be issued as recommended by Engineer, and approved by Owner, to reflect actual amounts due Contractor on account of Work covered by allowances, and the Contract Price shall be correspondingly

adjusted. Contractor shall make no Claim nor receive any compensation for anticipated profits, loss of profit, damages, or any extra payment due to the difference between the amount of Work actually completed and the original amount allocated for the allowance.

11.03 *Unit Price Work*

A. Where the Contract Documents provide that all or part of the Work is to be Unit Price Work, initially the Contract Price will be deemed to include for all Unit Price Work an amount equal to the sum of the unit price for each separately identified item of Unit Price Work times the estimated quantity of each item as indicated in the Agreement.

B. The estimated quantities of items of Unit Price Work are not guaranteed and are solely for the purpose of comparison of Bids and determining an initial Contract Price. Determinations of the actual quantities and classifications of Unit Price Work performed by Contractor will be made by Engineer subject to the provisions of Paragraph 9.07.

C. Each unit price will be deemed to include an amount considered by Contractor to be adequate to cover Contractor's overhead and profit for each separately identified item.

D. Contractor may make a Claim for an adjustment in the Contract Price in accordance with Paragraph 10.05 for Unit Price Work only when the following conditions are satisfied:

1. the quantity of any item of Unit Price Work performed by Contractor differs materially and significantly from the estimated quantity of such item indicated in the Agreement, and if the change increases or decreases the actual unit cost of the changed item as compared to the estimated actual unit cost of performing the Work; and

2. there is no corresponding adjustment with respect to any other item of Work; and

3. If Contractor has incurred additional expense justifying an increase in Contract Price for the Unit Price Work, Contractor's exclusive remedy is set forth in Paragraph 10.05.

11.04 *Extra Work*

A. "Extra work" consists of work, desired or performed, not included in the original Contract, which the Engineer determines is not covered by any of the various items for which there is a Bid price or by combinations of those items. In the event portions of this work are determined by the Engineer to be covered by some of the various items for which there is a Bid price or combinations of those items, the remaining portion of the work will be classed as extra work. Extra work also includes work specifically designated as "extra work" in the Specifications.

B. The Contractor shall do the extra work and furnish labor, material and equipment therefor upon receipt of a Change Order or Work Change Directive from the Engineer,

and in the absence of such Change Order or Work Change Directive, the Contractor shall not be entitled to payment for the extra work.

ARTICLE 12 – CHANGE OF CONTRACT PRICE; CHANGE OF CONTRACT TIMES

12.01 *Change of Contract Price*

A. The Contract Price may only be changed by a Change Order. Any Claim for an adjustment in the Contract Price shall be based on written notice submitted by Contractor in accordance with the provisions of Paragraph 10.05.

B. The value of any Work covered by a Change Order or of any Claim for an adjustment in the Contract Price will be determined as follows:

1. where the Work involved is covered by unit prices contained in the Contract Documents and the total pay quantity varies from the estimated quantity of such item indicated in the Agreement by 25% or less, by application of such unit prices to the quantities of the items involved (subject to the provisions of Paragraph 11.03); or

2. where the Work involved is not covered by unit prices contained in the Contract Documents, by a mutually agreed lump sum (which may include an allowance for overhead and profit not necessarily in accordance with Paragraph 12.01.C.2); or

3. where the Work involved is not covered by unit prices contained in the Contract Documents and agreement to a lump sum is not reached under Paragraph 12.01.B.2, on the basis of the Cost of the Work (determined as provided in Paragraph 11.01) plus a Contractor's fee for overhead and profit (determined as provided in Paragraph 12.01.C); or

4. where the Work involved is covered by unit prices contained in the Contract Documents and the total pay quantity of any item of Work required under the Contract exceeds the total pay quantity of the item indicated in the Agreement therefor by more than 25 percent, the Work in excess of 125 percent and not covered by an executed Change Order specifying the compensation to be paid therefor will be paid for by adjusting the Contract unit price, as hereinafter provided, or at the option of Engineer, payment for the Work involved in the excess will be paid for as extra work as provided in Paragraph 11.01.

   The adjustment of the unit price for said Work in excess of 125 percent will be the difference between the Contract unit price and the actual unit cost which will be determined as hereinafter provided, of the total pay quantity of the item. If the costs applicable to the item of work include fixed costs, the fixed costs will be deemed to have been recovered by Contractor by the payments made for 125 percent of the estimated quantity of such item indicated in the Agreement, and in computing the actual unit cost, the fixed costs will be excluded. Subject to the above provisions, the actual unit cost will be determined by Engineer in the same manner as if the work were to be paid for as extra work as provided in Paragraph 11.01; or the adjustment will be as agreed to by Contractor and Engineer.

When the compensation payable for the number of units of an item of work performed in excess of 125 percent of the total pay quantity of the item indicated in the Agreement is less than $5,000 at the applicable Contract unit price, Engineer reserves the right to make no adjustment in the Contract unit price if Engineer so elects, except that an adjustment will be made if requested in writing by Contractor; or

5. where the Work involved is covered by unit prices contained in the Contract Documents and the total pay quantity of any item of Work required under the Contract is less than 75 percent of the total pay quantity of the item indicated in the Agreement therefor, an adjustment in compensation pursuant to this paragraph will not be made unless Contractor submits a written request to Engineer. If Contractor so requests, the quantity of the item performed, unless covered by an executed Contract Change Order specifying the compensation payable therefor, will be paid for by adjusting the Contract unit price as hereinafter provided, or at the option of Engineer, payment for the quantity of the work of the item performed will be paid for as extra work as provided in Paragraph 11.01, provided however, that in no case shall the payment for that Work be less than that which would be made at the Contract unit price.

   The adjustment of the Contract unit price will be the difference between the Contract unit price and the actual unit cost, which will be determined as hereinafter provided, of the total pay quantity of the item, including fixed costs. The actual unit cost will be determined by Engineer in the same manner as if the Work were to be paid for as extra work as provided in Paragraph 11.01; or the adjustment will be as agreed to by Contractor and Engineer.

   The payment for the total pay quantity of the item of work will in no case exceed the payment which would be made for the performance of 75 percent of the of the total pay quantity of the item indicated in the Agreement of the quantity for the item at the original contract unit price.

C. *Contractor's Fee:* The Contractor's fee for overhead and profit shall be determined as follows:

1. a mutually acceptable fixed fee; or

2. if a fixed fee is not agreed upon, then a fee based on the following percentages of the various portions of the Cost of the Work:

   a. for costs incurred under Paragraphs 11.01.A.1 and 11.01.A.2, the Contractor's fee shall be 10 percent;

   b. for costs incurred under Paragraph 11.01.A.3, the Contractor's fee shall be five percent;

   c. where one or more tiers of subcontracts are on the basis of Cost of the Work plus a fee and no fixed fee is agreed upon, the intent of Paragraphs 12.01.C.2.a and 12.01.C.2.b is that the Subcontractor who actually performs the Work, at whatever tier, will be paid a fee of 10 percent of the costs incurred by such

Subcontractor under Paragraphs 11.01.A.1 and 11.01.A.2 and that any higher tier Subcontractor and Contractor will each be paid a fee of five percent of the amount paid to the next lower tier Subcontractor, provided, however, that on any subcontracted work the total maximum fee to be paid by Owner under this subparagraph shall be no greater than 27 percent of the costs incurred by the Subcontractor who actually performs the work;

d. no fee shall be payable on the basis of costs itemized under Paragraphs 11.01.A.4, 11.01.A.5, and 11.01.B;

e. the amount of credit to be allowed by Contractor to Owner for any change which results in a net decrease in cost will be the amount of the actual net decrease in cost plus a deduction in Contractor's fee by an amount equal to five percent of such net decrease; and

f. when both additions and credits are involved in any one change, the adjustment in Contractor's fee shall be computed on the basis of the net change in accordance with Paragraphs 12.01.C.2.a through 12.01.C.2.e, inclusive.

12.02 *Change of Contract Times*

A. The Contract Times may only be changed by a Change Order. Any Claim for an adjustment in the Contract Times shall be based on written notice submitted by Contractor in accordance with the provisions of Paragraph 10.05.

B. Any adjustment of the Contract Times covered by a Change Order or any Claim for an adjustment in the Contract Times will be determined in accordance with the provisions of this Article 12.

C. All time limits stated in the Contract Documents are of the essence of the Agreement. Contractor acknowledges and understands that Owner has a need for the completed Work, shortly after the date set forth in the Agreement.

12.03 *Delays*

A. If Contractor believes it has been prevented from completing any part of the Work with the Contract Times due to delay beyond the control of Contractor, Contractor's exclusive remedy is set forth in Paragraph 10.05.

B. If Owner delays, disrupts, or interferes with the performance or progress of the Work, then Contractor shall be entitled to an equitable adjustment in the Contract Price or the Contract Times, or both. Contractor's entitlement to an adjustment of the Contract Times is conditioned on such adjustment being essential to Contractor's ability to complete the Work within the Contract Times.

1. Owner shall not be liable, as damages for delays under Paragraph 12.03.B, for any consequential damages, lost opportunity costs, impact damages, or other similar remuneration. Owner's exercise of any of its rights or remedies under the Contract Documents (including, without limitation, ordering changes in the Work, directing suspension, rescheduling, or correction of the Work, or terminating this Agreement

for its convenience), regardless of the extent or frequency of Owner's exercise of such rights or remedies, shall not be construed as active interference with Contractor's performance of the Work. If Contractor submits a Progress Schedule or any other schedule indicating, or otherwise expressing, an intention to achieve completion of the Work prior to any completion date required by the Contract Documents, or expiration of the Contract Times, Owner shall have no liability to Contractor for any failure of Contractor to so complete the Work according to such schedule.

C. If Contractor is delayed in the performance or progress of the Work by fire, flood, epidemic, abnormal weather conditions, acts of God, acts or failures to act of utility owners not under the control of Owner, or other causes not the fault of and beyond control of Owner and Contractor, then Contractor shall be entitled to an equitable adjustment in Contract Times, if such adjustment is essential to Contractor's ability to complete the Work within the Contract Times. Such an adjustment shall be Contractor's sole and exclusive remedy for the delays described in this Paragraph 12.03.C.

D. Owner, Engineer, and their officers, directors, members, partners, employees, agents, consultants, or subcontractors shall not be liable to Contractor for any claims, costs, losses, or damages (including but not limited to all fees and charges of engineers, architects, attorneys, and other professionals and all court or arbitration or other dispute resolution costs) sustained by Contractor on or in connection with any other project or anticipated project.

E. Contractor shall not be entitled to an adjustment in Contract Price or Contract Times for delays within the control of Contractor. Delays attributable to and within the control of a Subcontractor or Supplier shall be deemed to be delays within the control of Contractor.

F. In no event shall Owner or Engineer be liable to Contractor, any Subcontractor, any Supplier, or any other person or organization, or to any surety for or employee or agent of any of them, for damages arising out of or resulting from:

1. any delays caused by or within the control of Contractor, its Subcontractors, Suppliers, agents and representatives; or

2. any delays beyond the control of Owner including but not limited to fires, floods, epidemics, abnormal weather conditions, acts of God, or acts or neglect by utility owners or other contractors performing other work as contemplated by Article 7.

ARTICLE 13 – TESTS AND INSPECTIONS; CORRECTION, REMOVAL OR ACCEPTANCE OF DEFECTIVE WORK

13.01 *Notice of Defects*

A. Reasonable notice of all defective Work of which Owner or Engineer has actual knowledge will be given to Contractor. Defective Work may be rejected, corrected, or accepted as provided in this Article 13.

13.02 *Access to Work*

A. Owner, Engineer, their consultants and other representatives and personnel of Owner, independent testing laboratories, the Agency.,and governmental agencies with jurisdictional interests will have access to the Site and the Work at all times for their observation, inspection, and testing. Contractor shall provide them proper and safe conditions for such access and advise them of Contractor's safety procedures and programs so that they may comply therewith as applicable.

13.03 *Tests and Inspections*

A. Contractor shall give Engineer timely notice of readiness of the Work for all required inspections, tests, or approvals and shall cooperate with inspection and testing personnel to facilitate required inspections or tests. Inspection of the Work shall not relieve Contractor of the obligation to fulfill all conditions of the Contact.

B. Owner shall employ and pay for the services of an independent testing laboratory to perform all inspections, tests, or approvals required by the Contract Documents except:

1. for inspections, tests, or approvals covered by Paragraphs 13.03.C and 13.03.D below;

2. that costs incurred in connection with tests or inspections conducted pursuant to Paragraph 13.04.B shall be paid as provided in Paragraph 13.04.C; and

3. as otherwise specifically provided in the Contract Documents.

C. If Laws or Regulations of any public body having jurisdiction require any Work (or part thereof) specifically to be inspected, tested, or approved by an employee or other representative of such public body, Contractor shall assume full responsibility for arranging and obtaining such inspections, tests, or approvals, pay all costs in connection therewith, and furnish Engineer the required certificates of inspection or approval.

D. Contractor shall be responsible for arranging and obtaining and shall pay all costs in connection with any inspections, tests, or approvals required for Owner's and Engineer's acceptance of materials or equipment to be incorporated in the Work; or acceptance of materials, mix designs, or equipment submitted for approval prior to Contractor's purchase thereof for incorporation in the Work. Such inspections, tests, or approvals shall be performed by organizations acceptable to Owner and Engineer.

E. If any Work (or the work of others) that is to be inspected, tested, or approved is covered by Contractor without written concurrence of Engineer, Contractor shall, if requested by Engineer, uncover such Work for observation.

F. Uncovering Work as provided in Paragraph 13.03.E shall be at Contractor's expense unless Contractor has given Engineer sufficient advanced written notice of Contractor's intention to cover the same and Engineer has not acted in the time set forth in Contractor's notice, or by the end of the next business day after Engineer receives Contractor's notice, whichever is later, in response to such notice.

13.04 *Uncovering Work*

A. If any Work is covered contrary to the written request of Engineer, it must, if requested by Engineer, be uncovered for Engineer's observation and replaced at Contractor's expense.

B. If Engineer considers it necessary or advisable that covered Work be observed by Engineer or inspected or tested by others, Contractor, at Engineer's request, shall uncover, expose, or otherwise make available for observation, inspection, or testing as Engineer may require, that portion of the Work in question, furnishing all necessary labor, material, and equipment.

C. If it is found that the uncovered Work is defective, Contractor shall pay all claims, costs, losses, and damages (including but not limited to all fees and charges of engineers, architects, and other professionals and all court or arbitration or other dispute resolution costs) arising out of or relating to such uncovering, exposure, observation, inspection, and testing, and of satisfactory replacement or reconstruction (including but not limited to all costs of repair or replacement of work of others); and Owner shall be entitled to an appropriate decrease in the Contract Price.

D. If the uncovered Work is not found to be defective, Contractor shall be allowed an increase in the Contract Price or an extension of the Contract Times, or both, directly attributable to such uncovering, exposure, observation, inspection, testing, replacement, and reconstruction, unless Contractor failed to provide the written notice required in Paragraph 13.03.F. If Contractor believes it is entitled to an adjustment in Contract Price and/or Contract Time, or any other relief, Contractor's exclusive remedy is set forth in Paragraph 10.05.

13.05 *Owner May Stop the Work*

A. If the Work is defective, or Contractor fails to supply sufficient skilled workers or suitable materials or equipment, or fails to perform the Work in such a way that the completed Work will conform to the Contract Documents, Owner may order Contractor to stop the Work, or any portion thereof, until the cause for such order has been eliminated; however, this right of Owner to stop the Work shall not give rise to any duty on the part of Owner to exercise this right for the benefit of Contractor, any Subcontractor, any Supplier, any other individual or entity, or any surety for, or employee or agent of any of them.

13.06 *Correction or Removal of Defective Work*

A. Promptly after receipt of written notice, Contractor shall correct all defective Work, whether or not fabricated, installed, or completed, or, if the Work has been rejected by Engineer, remove it from the Project and replace it with Work that is not defective. Contractor shall pay all claims, costs, losses, and damages (including but not limited to all fees and charges of engineers, architects, and other professionals and all court or arbitration or other dispute resolution costs) arising out of or relating to such correction or removal (including but not limited to all costs of repair or replacement of work of others).

B. When correcting defective Work under the terms of this Paragraph 13.06 or Paragraph 13.07, Contractor shall take no action that would void or otherwise impair Owner's special warranty and guarantee, if any, on said Work.

13.07 *Correction Period*

A. If within one year after the date of Substantial Completion (or such longer period of time as may be prescribed by the terms of any applicable special guarantee or warranty specified or required by the Contract Documents), any Work is found to be defective, or if the repair of any damages to the land or areas made available for Contractor's use by Owner or permitted by Laws and Regulations as contemplated in Paragraph 6.11.A is found to be defective, Contractor shall promptly, without cost to Owner and in accordance with Owner's written instructions:

1. repair such defective land or areas;

2. correct such defective Work;

3. if the defective Work has been rejected by Owner, remove it from the Project and replace it with Work that is not defective, and

4. satisfactorily correct or repair or remove and replace any damage to other Work, to the work of others or other land or areas resulting therefrom.

B. If Contractor does not promptly comply with the terms of Owner's written instructions, or in an emergency where delay would cause serious risk of loss or damage, Owner may have the defective Work corrected or repaired or may have the rejected Work removed and replaced. All claims, costs, losses, and damages (including but not limited to all fees and charges of engineers, architects, and other professionals and all court or arbitration or other dispute resolution costs) arising out of or relating to such correction or repair or such removal and replacement (including but not limited to all costs of repair or replacement of work of others) will be paid by Contractor.

C. In special circumstances where a particular item of equipment is placed in continuous service for the benefit of Owner before Substantial Completion of all the Work, the correction period for that item may start to run from an earlier date if so provided in the Specifications.

D. Where defective Work (and damage to other Work resulting therefrom) has been corrected or removed and replaced under this Paragraph 13.07, the correction period hereunder with respect to such Work will be extended for an additional period of one year after such correction or removal and replacement has been satisfactorily completed, or for such additional period as specified in the Contract Documents.

E. Contractor's obligations under this Paragraph 13.07 are in addition to Contractor's general warranty and guarantee under Paragraph 6.19 and any other obligation or warranty required by the Contract Documents. The provisions of this Paragraph 13.07 and Paragraph 6.19 shall not be construed as a substitute for, or a waiver of, or limitation upon the provisions of any applicable statute of limitation or repose. Establishment of the one-year correction period relates only to the specific obligation of

the Contractor to correct defective Work, and has no relationship to the time within which the Contractor's obligation to comply with the Contract Documents may be enforced.

13.08 *Acceptance of Defective Work*

A. If, instead of requiring correction or removal and replacement of defective Work, Owner (and, prior to Engineer's recommendation of final payment, Engineer) prefers to accept it, Owner may do so. Contractor shall pay Owner all of the following sums (hereafter "Paragraph 13.08 Costs"): (1) all claims, costs, losses, and damages (including but not limited to all fees and charges of engineers, architects, and other professionals and all court or arbitration or other dispute resolution costs) attributable to Owner's evaluation of and determination to accept such defective Work; (such costs to be approved by Engineer as to reasonableness) (2) and for the diminished value of the Work to the extent not otherwise paid by Contractor pursuant to this sentence. If any such acceptance occurs prior to Engineer's recommendation of final payment, a Change Order will be issued incorporating the necessary revisions in the Contract Documents with respect to the Work, and Owner shall be entitled to an appropriate decrease in the Contract Price in the sum of the Paragraph 13.08 Costs. If the parties are unable to agree as to the amount thereof, Owner may withhold the sum of the Paragraph 13.08 Costs from any payments otherwise due Contractor, and Contractor may make a Claim therefor as provided in Paragraph 10.05. If the acceptance occurs after such recommendation or if the amount of the payment(s) otherwise due the Contractor are less than the Paragraph 13.08 Costs, Contractor shall pay Owner the appropriate amount to fully compensate the Owner for all Paragraph 13.08 Costs.

13.09 *Owner May Correct Defective Work*

A. If Contractor fails within a reasonable time after written notice from Engineer to correct defective Work, or to remove and replace rejected Work as required by Engineer in accordance with Paragraph 13.06.A, or if Contractor fails to perform the Work in accordance with the Contract Documents, or if Contractor fails to comply with any other provision of the Contract Documents, Owner may, after seven days written notice to Contractor, correct, or remedy any such deficiency.

B. In exercising the rights and remedies under this Paragraph 13.09, Owner shall proceed expeditiously. In connection with such corrective or remedial action, Owner may exclude Contractor from all or part of the Site, take possession of all or part of the Work and suspend Contractor's services related thereto, take possession of Contractor's tools, appliances, construction equipment and machinery at the Site, and incorporate in the Work all materials and equipment stored at the Site or for which Owner has paid Contractor but which are stored elsewhere. Contractor shall allow Owner, Owner's representatives, agents and employees, Owner's other contractors, and Engineer and Engineer's consultants access to the Site to enable Owner to exercise the rights and remedies under this Paragraph.

C. All claims, costs, losses, and damages (including but not limited to all fees and charges of engineers, architects, and other professionals and all court or arbitration or other dispute resolution costs) incurred or sustained by Owner in exercising the rights and

remedies under this Paragraph 13.09 (hereafter, collectively "Paragraph 13.09 Costs") will be charged against Contractor, and a Change Order will be issued incorporating the necessary revisions in the Contract Documents with respect to the Work; and Owner shall be entitled to an appropriate decrease in the Contract Price in the sum of the Paragraph 13.09 Costs. If the parties are unable to agree as to the amount of the adjustment, Owner may withhold the sum of the Paragraph 13.09 Costs from any payments otherwise due Contractor, and Contractor may make a Claim therefor as provided in Paragraph 10.05. If the amount of the payment(s) otherwise due Contractor are less than the Paragraph 13.09 Costs, Contractor shall pay Owner the appropriate amount to fully compensate Owner for all Paragraph 13.09 Costs. Paragraph 13.09 Costs include, but are not limited to, all costs of repair, or replacement of work of others destroyed or damaged by correction, removal, or replacement of Contractor's defective Work.

D. Contractor shall not be allowed an extension of the Contract Times because of any delay in the performance of the Work attributable to the exercise by Owner of Owner's rights and remedies under this Paragraph 13.09.

ARTICLE 14 – PAYMENTS TO CONTRACTOR AND COMPLETION

14.01 *Schedule of Values*

A. The Schedule of Values established as provided in Paragraph 2.07.A will serve as the basis for progress payments and will be incorporated into a form of Application for Payment acceptable to Engineer. Progress payments on account of Unit Price Work will be based on the number of units completed.

14.02 *Progress Payments*

A. *Applications for Payments:*

1. On the first business day of the month, Contractor shall submit to Engineer for review an Application for Payment filled out and signed by Contractor covering the Work completed as of the date of the Application and accompanied by such supporting documentation as is required by the Contract Documents including, but not limited to, a Schedule of Values reflecting current status; an updated Project Schedule; and affidavits signed by all Subcontractor performing the Work to date, stating that each of them has been paid, less earned retainage, as their interest appeared in the last preceding Application for Payment. If payment is requested on the basis of materials and equipment not incorporated in the Work but delivered and suitably stored at the Site or at another location agreed to in writing, the Application for Payment shall also be accompanied by a bill of sale, invoice, or other documentation warranting that Owner has received the materials and equipment free and clear of all Liens and evidence that the materials and equipment are covered by appropriate property insurance or other arrangements to protect Owner's interest therein, all of which must be satisfactory to Owner.

2. Beginning with the second Application for Payment, each Application shall include an affidavit of Contractor stating that all previous progress payments received on

account of the Work have been applied on account to discharge Contractor's legitimate obligations associated with prior Applications for Payment.

3. The amount of retainage with respect to progress payments will be as stipulated in the Agreement. No payments will be made that would deplete the retainage, place in escrow any funds that are required for retainage, or invest the retainage for the benefit of Contractor.

4. The Application for Payment Form to be used on this Project is located in Section 00820. The Agency must approve all Applications for Payment before payment is made.

B. *Review of Applications:*

1. Engineer will, within 7 days after receipt of each Application for Payment, either indicate in writing a recommendation of payment and present the Application to Owner and Agency or return the Application to Contractor indicating in writing Engineer's reasons for refusing to recommend payment. In the latter case, Contractor may make the necessary corrections and resubmit the Application. Engineer will be acting as Owner's authorized representative in reviewing each Application for Payment, and Engineer shall perform such review in compliance with Public Contract Code section 20104.50. If Engineer determines that an Application for Payment is not proper, Engineer shall return said application to Contractor as soon as practicable, but not later than 7 days after Engineer's receipt of said application, and shall set forth in writing to Contractor the reasons why the payment request is not proper. If Engineer exceeds the 7-day return requirement set forth in this paragraph, the number of days available to Owner to make a payment without incurring interest shall be correspondingly reduced as set forth in Paragraph 14.02.C.

2. Engineer's recommendation of any payment requested in an Application for Payment will constitute a representation by Engineer to Owner and Agency, based on Engineer's observations of the executed Work as an experienced and qualified design professional, and on Engineer's review of the Application for Payment and the accompanying data and schedules, that to the best of Engineer's knowledge, information and belief:

   a. the Work has progressed to the point indicated;

   b. the quality of the Work is generally in accordance with the Contract Documents (subject to an evaluation of the Work as a functioning whole prior to or upon Substantial Completion, the results of any subsequent tests called for in the Contract Documents, a final determination of quantities and classifications for Unit Price Work under Paragraph 9.07, and any other qualifications stated in the recommendation); and

   c. the conditions precedent to Contractor's being entitled to such payment appear to have been fulfilled in so far as it is Engineer's responsibility to observe the Work.

3. By recommending any such payment Engineer will not thereby be deemed to have represented that:

    a. inspections made to check the quality or the quantity of the Work as it has been performed have been exhaustive, extended to every aspect of the Work in progress, or involved detailed inspections of the Work beyond the responsibilities specifically assigned to Engineer in the Contract Documents; or

    b. there may not be other matters or issues between the parties that might entitle Contractor to be paid additionally by Owner or entitle Owner to withhold payment to Contractor.

4. Neither Engineer's review of Contractor's Work for the purposes of recommending payments nor Engineer's recommendation of any payment, including final payment, will impose responsibility on Engineer:

    a. to supervise, direct, or control the Work, or

    b. for the means, methods, techniques, sequences, or procedures of construction, or the safety precautions and programs incident thereto, or

    c. for Contractor's failure to comply with Laws and Regulations applicable to Contractor's performance of the Work, or

    d. to make any examination to ascertain how or for what purposes Contractor has used the moneys paid on account of the Contract Price, or

    e. to determine that title to any of the Work, materials, or equipment has passed to Owner free and clear of any Liens.

5. Contractor shall also comply with the following specific requirements:

    a. The aggregate cost of materials stored off site shall not exceed $10,000.00 at any time without written approval of Owner.

    b. Title to such materials shall be vested in Owner, as evidenced by documentation satisfactory in form and substance to Owner, including, without limitation, recorded financing statements, UCC filings, and UCC searches.

    c. With each Application for Payment, Contractor shall submit to Engineer a written list identifying each location where materials are stored off the Project Site and the value of materials at each location. Contractor shall procure insurance satisfactory to Owner for materials stored off the Project Site in an amount not less than the total value thereof.

    d. The consent of any surety shall be obtained, to the extent required by the surety, or Owner prior to payment for any materials stored off the Project Site.

    e. Engineer and Owner shall have the right to make inspections of the storage areas for any materials stored off the Project Site at any time.

f. Such materials shall be (1) protected from diversion, destruction, theft, and damage to the satisfaction of the Engineer and/or Owner; (2) specifically marked for use on the Project; and (3) segregated from other materials at the storage facility.

6. Engineer may refuse to recommend the whole or any part of any payment if, in Engineer's opinion, it would be incorrect to make the representations to Owner stated in Paragraph 14.02.B.2. Engineer may also refuse to recommend any such payment or, because of subsequently discovered evidence or the results of subsequent inspections or tests, revise or revoke any such payment recommendation previously made, to such extent as may be necessary in Engineer's opinion to protect Owner from loss because:

   a. the Work is defective, or completed Work has been damaged, requiring correction or replacement;

   b. the Contract Price has been reduced by Change Orders;

   c. Owner has been required to correct defective Work or complete Work in accordance with Paragraph 13.09; or

   d. Engineer has actual knowledge of the occurrence of any of the events enumerated in Paragraph 15.02.A.

   e. Third party claims filed or reasonable evidence indicating probable filing of such claims;

   f. Contractor's failure to make payments properly to subcontractors or suppliers for labor, materials or equipment;

   g. Reasonable evidence that the Work cannot be completed for the unpaid balance of the Contract Price;

   h. Damage to property, the Work, Owner, another contractor or a third party;

   i. Reasonable evidence that the Work will not be completed within the Contract Times, and that the unpaid balance would not be adequate to cover actual or liquidated damages for the anticipated delay;

   j. Work that required submittals was performed prior to obtaining in writing from the Engineer any required acceptance, approval or other response required under the Contract Documents for said submittals;

   l. Contractor's persistent failure to carry out the Work in accordance with the Contract Documents;

   m. Contractor's failure to submit a construction schedule or to update the construction schedule in accordance with the Contract Documents;

n. Contractor's failure to timely provide or update any record documents, Shop Drawings, or Samples as required of Contractor under the Contract Documents (including, but not limited to, Paragraph 6.12);

o. Contractor's failure to reinstate required insurance that has been allowed to lapse;

p. Contractor's failure to pay money owed to Owner under the Contract Documents; or

q. Contractor's failure to provide Engineer copies of any contracts with Subcontractors or Suppliers requested by Engineer.

6. Engineer will help coordinate and attend any Site visit(s) or other meetings requested by Agency or Owner to help facilitate Agency and/or Owner approval of a recommended payment. If so directed by Owner, Engineer shall simultaneously send to the Agency any payment recommendations it sends to Owner.

C. *Payment Becomes Due:*

1. Pursuant to Public Contract Code section 20104.50, Owner shall make a progress payment (subject to the provisions of Paragraph 14.02.D.) within 30 days of Engineer's receipt of an undisputed and properly submitted Application for Payment. If Owner fails to make a progress payment on an undisputed and properly submitted Application for Payment within said 30 day period, Owner shall pay interest to Contractor equivalent to the legal rate set forth in subdivision (a) of section 685.010 of the Code of Civil Procedure. The number of days available to Owner to make a payment without incurring interest pursuant to Public Contract Code section 20104.50 shall be reduced by the number of days by which Engineer exceeds the 7 day return requirement set forth in Paragraph 14.02.B.1.

D. *Reduction in Payment:*

1. Owner may refuse to make payment of the full amount recommended by Engineer because:

a. claims have been made against Owner on account of Contractor's performance or furnishing of the Work;

b. Liens, stop notices or third-party claims for non-payment have been filed in connection with the Work, except where Contractor has delivered a specific release bond satisfactory to Owner to secure the satisfaction and discharge of such Liens and stop notices;

c. there are other items entitling Owner to a set-off against the amount recommended; or

d. Owner has actual knowledge of the occurrence of any of the events enumerated in Paragraphs 14.02.B.5.a through 14.02.D.5.q or Paragraph 15.02.A.

e. Contractor's failure to submit or obtain acceptance of a progress schedule, schedule of values, and any updated schedules;

f. Defective or non-conforming Work;

g. Costs incurred by Owner to correct, repair or replace Defective or nonconforming Work, or to complete the Work;

h. A reasonable doubt that the Work can be completed for the balance then unpaid;

i. A reasonable concern by Owner that the materials, equipment or component parts are not in proper operating condition;

j. Assessment of Liquidated Damages;

k. Contractor's failure to perform in accordance with the Agreement;

l. A reasonable concern that cost or liability that may occur to Owner as the result of Contractor's, Subcontractor's or Supplier's improper acts, omissions, fault, or negligence will cause Owner to incur cost, expense or liability (even if Owner is indemnified for such cost, expense or liability under Paragraph 6.20);

m. Reduction in contract Work;

n. Failure of Contractor to repair damaged materials, equipment, property, or Work;

o. Contractor's failure to provide or obtain review of submittals;

p. Contractor's failure to pay Subcontractors or Suppliers;

q. Contractor's failure to keep record documents up to date;

r. Contractor's failure to comply with all applicable federal, state, and local laws, statutes, regulations, codes, licenses, easements, and permits;

s. Contractor's failure to obtain and maintain applicable permits, insurance, and bonds;

t. Contractor's failure to provide certified payroll records

u. Contractor's failure to comply with the contract safety requirements; and

v. Contractor's failure to pay money owed to Owner under the Contract Documents.

2. If Owner refuses to make payment of the full amount recommended by Engineer, Owner will give Contractor immediate written notice (with a copy to Engineer) stating the reasons for such action and promptly pay Contractor any amount remaining after deduction of the amount so withheld. Owner shall promptly pay

Contractor the amount so withheld, or any adjustment thereto agreed to by Owner and Contractor, when Contractor remedies the reasons for such action.

14.03 *Contractor's Warranty of Title*

A. Contractor warrants and guarantees that title to all Work, materials, and equipment covered by any Application for Payment, whether incorporated in the Project or not, will pass to Owner no later than the time of payment free and clear of all Liens.

1. Contractor further expressly undertakes to defend Owner and Engineer, at Contractor's sole expense, against any actions, lawsuits, or proceedings brought against Owner, Engineer, or any third party as a result of liens filed against the Work, the site of any of the Work, the Project Site and any improvements thereon, payments due Contractor, or any portion of the property of Owner, Engineer, or third party. Contractor hereby agrees to indemnify and hold Owner, Engineer, and third parties harmless against any such liens or claims of lien and agrees to pay any judgment or lien resulting from any such action, lawsuit, or proceeding.

14.04 *Substantial Completion*

A. When Contractor considers the entire Work is properly completed in conformance with the Contract Documents and ready for its intended use Contractor shall notify Owner and Engineer in writing that the entire Work is substantially complete (except for minor items which do not materially affect the intended use of the Project and which are specifically listed in writing by Contractor as incomplete) and request that Engineer issue a certificate of Substantial Completion. Failure to include an item on such list does not alter the responsibility of Contractor to complete all Work in accordance with the Contract Documents. Such written notification in writing by Contractor is a prerequisite to any assertion or claim by Contractor that the entire Work is substantially complete, or that a certificate of Substantial Completion has been improperly withheld or delayed.

B. After Contractor's notification and at a time Engineer and Owner determine to be reasonable, Owner, Contractor, and Engineer shall make an inspection of the Work to determine the status of completion. If Engineer or Owner does not consider the Work substantially complete, Engineer will notify Contractor in writing giving the reasons therefor. Engineer shall provide Owner and Designer sufficient advance notice of any such inspection so as to provide Owner and Designer a reasonable amount of time to make arrangements to join Engineer and Contractor during such inspection. If requested by Owner, the date and time of any such inspection shall be rescheduled to allow Owner and/or Designer to accompany Engineer and Contractor during the inspection

C. If Engineer and Owner consider the Work substantially complete, Engineer will deliver to Owner a tentative certificate of Substantial Completion which shall fix the date of Substantial Completion. There shall be attached to the certificate a tentative list of minor items to be completed or corrected before final payment. Owner shall have seven days after receipt of the tentative certificate during which to make written objection to Engineer as to any provisions of the certificate or attached list. If, after considering such objections, Engineer or Owner concludes that the Work is not substantially complete, Engineer will, within 14 days after submission of the tentative certificate to Owner,

notify Contractor in writing, stating the reasons therefor. If, after consideration of Owner's objections, Engineer and Owner consider the Work substantially complete, Engineer will, within said 14 days, execute and deliver to Owner and Contractor a definitive certificate of Substantial Completion (with a revised tentative list of items to be completed or corrected) reflecting such changes from the tentative certificate as Engineer and Owner believe justified after consideration of any objections from Owner.

D. At the time of delivery of the tentative certificate of Substantial Completion, Engineer and Owner will deliver to Contractor a written recommendation as to division of responsibilities pending final payment between Owner and Contractor with respect to security, operation, safety, and protection of the Work, maintenance, heat, utilities, insurance, and warranties and guarantees. Unless Owner and Contractor agree otherwise in writing and so inform Engineer in writing prior to Engineer's issuing the definitive certificate of Substantial Completion, Engineer's aforesaid recommendation will be binding on Contractor.

E. Owner shall have the right to exclude Contractor from the Site after the date of Substantial Completion subject to allowing Contractor reasonable access to remove its property and complete or correct items on the tentative list.

14.05 *Partial Utilization*

A. Prior to Substantial Completion of all the Work, Owner may use or occupy any substantially completed part of the Work which has specifically been identified in the Contract Documents, or which Owner, Engineer, and Contractor agree constitutes a separately functioning and usable part of the Work that can be used by Owner for its intended purpose without significant interference with Contractor's performance of the remainder of the Work, subject to the following conditions:

1. Owner at any time may request Contractor in writing to permit Owner to use or occupy any such part of the Work which Owner believes to be ready for its intended use and substantially complete. If and when Contractor agrees that such part of the Work is substantially complete, Contractor, Owner, and Engineer will follow the procedures of Paragraph 14.04.A through D for that part of the Work.

2. Contractor at any time may notify Owner and Engineer in writing that Contractor considers any such part of the Work ready for its intended use and substantially complete and request Engineer to issue a certificate of Substantial Completion for that part of the Work.

3. Within a reasonable time after either such request, Owner, Contractor, and Engineer shall make an inspection of that part of the Work to determine its status of completion. If Engineer or Owner does not consider that part of the Work to be substantially complete, Engineer will notify Owner and Contractor in writing giving the reasons therefor. If Engineer and Owner consider that part of the Work to be substantially complete, the provisions of Paragraph 14.04 will apply with respect to certification of Substantial Completion of that part of the Work and the division of responsibility in respect thereof and access thereto.

14.06 *Final Inspection*

A. Upon written notice from Contractor that the entire Work or an agreed portion thereof is complete, Engineer will promptly make a final inspection with Owner and Contractor and will notify Contractor in writing of all particulars in which this inspection reveals that the Work is incomplete or defective. Contractor shall immediately take such measures as are necessary to complete such Work or remedy such deficiencies.

14.07 *Final Payment*

A. *Application for Payment:*

1. After Contractor has, in the opinion of Engineer, satisfactorily completed all corrections identified during the final inspection and has delivered, in accordance with the Contract Documents, all maintenance and operating instructions, schedules, guarantees, bonds, certificates or other evidence of insurance, certificates of inspection, documents described in Paragraph 6.12, and other documents;

   a. Engineer shall make a formal recommendation to Owner to initiate Owner's internal procedures that would allow the County Board of Supervisors to accept the Work at a future Board meeting.

   b. Contractor may make an application for final payment following the procedure for progress payments.

2. The final Application for Payment shall be accompanied (except as previously delivered) by:

   a. all documentation called for in the Contract Documents, including but not limited to the evidence of insurance required by Paragraph 5.04.B.6;

   b. consent of the surety, if any, to final payment;

   c. a list of all Claims against Owner that Contractor believes are unsettled (this list must accompany the final Application for Payment regardless of whether it has been previously delivered); and

   d. complete and legally effective releases or waivers (satisfactory to Owner) of all Lien rights arising out of or Liens filed in connection with the Work.

3. In lieu of the releases or waivers of Liens specified in Paragraph 14.07.A.2 and as approved by Owner, Contractor may furnish receipts or releases in full and an affidavit of Contractor that: (i) the releases and receipts include all labor, services, material, and equipment for which a Lien could be filed; and (ii) all payrolls, material and equipment bills, and other indebtedness connected with the Work for which Owner might in any way be responsible, or which might in any way result in liens or other burdens on Owner's property, have been paid or otherwise satisfied. If any Subcontractor or Supplier fails to furnish such a release or receipt in full, Contractor may furnish a bond or other collateral satisfactory to Owner to indemnify Owner against any Lien.

4. Paragraph 14.07.A.3 shall be interpreted in a manner consistent with the applicable California law relating to stop notices. To the extent there is any inconsistency between Paragraph 14.07.A.3 and California stop notice law, the applicable law shall prevail.

B. *Engineer's Review of Application and Acceptance:*

1. If, on the basis of Engineer's observation of the Work during construction and final inspection, and Engineer's review of the final Application for Payment and accompanying documentation as required by the Contract Documents, Engineer is satisfied that the Work has been completed and Contractor's other obligations under the Contract Documents have been fulfilled, Engineer will, within ten days after receipt of the final Application for Payment, indicate in writing Engineer's recommendation of payment and present the Application for Payment to Owner for payment. At the same time Engineer will also give written notice to Owner and Contractor that the Work is acceptable subject to the provisions of Paragraph 14.09. Otherwise, Engineer will return the Application for Payment to Contractor, indicating in writing the reasons for refusing to recommend final payment, in which case Contractor shall make the necessary corrections and resubmit the Application for Payment.

C. *Payment Becomes Due:*

1. Thirty-five days after the filing of a Notice of Completion with the County Recorder and after presentation to Owner of the Application for Payment and accompanying documentation, the amount recommended by Engineer, less any sum Owner is entitled to set off against Engineer's recommendation, including but not limited to liquidated damages, will become due and payable by Owner to Contractor.

14.08 *Final Completion Delayed*

A. If, through no fault of Contractor, final completion of the Work is significantly delayed, and if Engineer so confirms, Owner shall, upon receipt of Contractor's final Application for Payment (for Work fully completed and accepted) and recommendation of Engineer, and without terminating the Contract, make payment of the balance due for that portion of the Work fully completed and accepted. If the remaining balance to be held by Owner for Work not fully completed or corrected is less than the retainage stipulated in the Agreement, and if bonds have been furnished as required in Paragraph 5.01, the written consent of the surety to the payment of the balance due for that portion of the Work fully completed and accepted shall be submitted by Contractor to Engineer with the Application for such payment. Such payment shall be made under the terms and conditions governing final payment, except that it shall not constitute a waiver of Claims listed in the final Application for Payment that were made in accordance with Paragraph 10.05.

14.09 *Waiver of Claims*

A. The making and acceptance of final payment will constitute:

1. *Blank*

2. a waiver of all Claims by Contractor against Owner other than those previously made in accordance with the requirements of Paragraph 10.05 that were listed in the final Application for Payment and expressly acknowledged by Owner in writing as still unsettled.

ARTICLE 15 – SUSPENSION OF WORK AND TERMINATION

15.01 *Owner May Suspend Work*

A. At any time and without cause, Owner may suspend the Work or any portion thereof for a period of not more than 90 consecutive days by notice in writing to Contractor and Engineer which will fix the date on which Work will be resumed. Contractor shall resume the Work on the date so fixed. If Contractor believes it is entitled to an adjustment in Contract Price and/or Contract Time, or any other relief, as a result of Owner suspending Work, Contractor's exclusive remedy is set forth in Paragraph 10.05.

15.02 *Owner May Terminate for Cause*

A. The occurrence of any one or more of the following events will justify termination for cause:

1. Contractor’s persistent failure to perform the Work in accordance with the Contract Documents (including, but not limited to, failure to have Contractor’s authorized representative, required by Paragraph 2.06.B, available as reasonably needed, including the repeated absence of such authorized representative for two business days consecutively or more at a time, failure to supply sufficient skilled workers or suitable materials or equipment or failure to adhere to the Progress Schedule established under Paragraph 2.07 as adjusted from time to time pursuant to Paragraph 6.04);

2. Contractor’s disregard of Laws or Regulations of any public body having jurisdiction;

3. Contractor’s repeated disregard of the authority of Engineer; or

4. Contractor’s violation in any substantial way of any provisions of the Contract Documents.

5. Contractor’s persistent failure to provide enough workers or materials to properly pursue the Work as required to complete the Work within the Contract Time;

6. Contractor’s persistent failure to perform the Work in accordance with the Contract Documents including, but not limited to providing monthly updates to the schedule of Work and monthly updates to Record Drawings, or to correct or replace Defective Work when directed to do so;

7. Contractor’s failure to make payment to subcontractors or material suppliers;

8. Contractor becomes insolvent, commences any form of voluntary bankruptcy proceedings, has any petition or action filed against it under any bankruptcy code or

law, makes a general assignment for the benefit of creditors, or if a trustee, receiver or agent is appointed under law to take charge of Contractor's property or operations for the benefit of creditors;

9. Contractor persistently disregards laws, regulations, rules or orders of public bodies having jurisdiction or persistently disregards the authority of Engineer or Owner;

10. Contractor’s failure to retain a valid Contractor's license of the required class in the applicable jurisdiction; or

11. Contractor otherwise commits a material breach of the Contract.

B. If one or more of the events identified in Paragraph 15.02.A occur, Owner may, after giving Contractor (and surety) seven days written notice thereof, terminate the services of Contractor, in whole or in part, without prejudicing any other right or remedy of Owner under the Contract. After giving Contractor (and surety) such written notice of its intent to terminate, in whole or in part, the services of Contractor, Owner may:

1. exclude Contractor from the Site, and take possession of the Work and of all Contractor’s tools, appliances, construction equipment, and machinery at the Site, and use the same to the full extent they could be used by Contractor (without liability to Contractor for trespass or conversion);

2. incorporate in the Work all materials and equipment stored at the Site or for which Owner has paid Contractor but which are stored elsewhere; and

3. complete the Work as Owner may deem expedient.

4. accept assignment of any or all agreements between Contractor and any Subcontractor or Supplier pursuant to Paragraph 6.06.K.

C. If Owner proceeds as provided in Paragraph 15.02.B, Contractor shall not be entitled to receive any further payment until the Work is completed. If the unpaid balance of the Contract Price exceeds all claims, costs, losses, and damages (including but not limited to all fees and charges of engineers, architects, attorneys, and other professionals and all court or arbitration or other dispute resolution costs) sustained by Owner arising out of or relating to completing the Work, such excess will be paid to Contractor. If such claims, costs, losses, and damages exceed such unpaid balance, Contractor shall pay the difference to Owner. Such claims, costs, losses, and damages incurred by Owner will be incorporated in a Change Order. When exercising any rights or remedies under this Paragraph, Owner shall not be required to obtain the lowest price for the Work performed.

D. Notwithstanding Paragraphs 15.02.B and 15.02.C, Contractor’s services will not be terminated if Contractor begins within seven days of receipt of notice of intent to terminate to correct its failure to perform and proceeds diligently to cure such failure within no more than 30 days of receipt of said notice.

E. Where Contractor’s services have been so terminated by Owner, the termination will not affect any rights or remedies of Owner against Contractor then existing or which

may thereafter accrue. Any retention or payment of moneys due Contractor by Owner will not release Contractor from liability.

15.03 *Owner's Termination For Convenience*

A. Owner may, at any time, terminate the Contractor's services in whole or in part, for Owner's convenience and without cause. Termination by Owner under this paragraph shall be by a written notice of termination delivered to Contractor specifying the extent of termination and the effective date. Any such termination of Contractor's services, in whole or in part, shall not prejudice any other right or remedy of Owner under the Contract.

B. Upon receipt of a notice of termination for convenience, Contractor shall immediately, in accordance with instructions from Owner, proceed with performance of the following duties regardless of any delay in determining or adjusting amounts due under this paragraph:

1. cease operations as specified in the notice;

2. place no further orders and enter into no further subcontracts for materials, labor, services, or facilities except as necessary to complete continued portions of the Contract;

3. terminate all subcontracts and orders to the extent they relate to the Work terminated

4. proceed to complete the performance of Work not terminated; and

5. take actions that may be necessary, or that Owner may direct, for the protection and preservation of the terminated Work.

C. Upon such termination, Contractor shall recover as its sole remedy for Work performed the percentage of the Contract Price equal to the percentage of the Work performed satisfactorily and not previously paid for as determined by Engineer and Owner (so if only 10 percent of a Bid item is completed, Contractor's sole remedy for that Work completed is recovery of 10 percent of that Bid item price, or 10 percent of the Schedule of Values relating to that bid item, whichever is the lesser amount). Contractor's sole remedy for uncompleted Work shall be the recovery of those reasonable expenses sustained prior to the effective date of termination in performing services and furnishing labor, materials, or equipment as required by the Contract Documents in connection with uncompleted Work, plus a five percent markup (that would cover all overhead and profit). Contractor's sole remedy for demobilization costs shall be the recovery of those reasonable costs incurred in demobilization, reduced by the percentage of the completed Work relating to the demobilization undertaken (so if certain reasonable demobilization costs relate to Work that is 60 percent completed, Contractor shall only be entitled to recover 40 percent of those costs). Contractor hereby waives and forfeits all other Claims for payment and damages, including, without limitation, anticipated profits or revenue or other economic loss arising out of or resulting from such termination.

D. Owner shall be credited for: (1) payments previously made to Contractor for the terminated portion of the Work; and (2) the value of the materials, supplies, equipment, or other items that are to be disposed of by Contractor that are part of the Contract Price.

ARTICLE 16 – DISPUTE RESOLUTION

16.01 *Methods and Procedures*

A. Either Owner or Contractor may request mediation of any Claim submitted to Engineer for a decision under Paragraph 10.05. Neither Owner nor Contractor is required to mediate any Claims. The cost of any mediator or mediation service shall be shared equally by Owner and Contractor. Each party shall be responsible for its own costs relating to its participating in any mediation.

B. Once Owner and Contractor agree to mediate a Claim, Owner and Contractor shall participate in the mediation process in good faith.

C. For all civil actions filed on Claims less than or equal to three hundred seventy-five thousand dollars ($375,000), the applicable procedures set forth in Pubic Contract Code section 20104.4 and 20104.6 shall apply, including the mediation and judicial arbitration procedures set forth therein.

ARTICLE 17 – MISCELLANEOUS

17.01 *Giving Notice*

A. Whenever any provision of the Contract Documents requires the giving of written notice, it will be deemed to have been validly given if:

1. delivered in person to the individual or to a member of the firm or to an officer of the corporation for whom it is intended; or

2. delivered at or sent by registered or certified mail, postage prepaid, to the last business address known to the giver of the notice.

17.02 *Computation of Times*

A. When any period of time is referred to in the Contract Documents by days, it will be computed to exclude the first and include the last day of such period. If the last day of any such period falls on a Saturday or Sunday or on a day made a legal holiday by the law of the applicable jurisdiction, such day will be omitted from the computation.

17.03 *Cumulative Remedies*

A. The duties and obligations imposed by these General Conditions and the rights and remedies available hereunder to the parties hereto are in addition to, and are not to be construed in any way as a limitation of, any rights and remedies available to any or all of them which are otherwise imposed or available by Laws or Regulations, by special warranty or guarantee, or by other provisions of the Contract Documents. The

provisions of this Paragraph will be as effective as if repeated specifically in the Contract Documents in connection with each particular duty, obligation, right, and remedy to which they apply.

17.04 *Survival of Obligations*

A. All representations, indemnifications, warranties, and guarantees made in, required by, or given in accordance with the Contract Documents, as well as all continuing obligations indicated in the Contract Documents, will survive final payment, completion, and acceptance of the Work or termination or completion of the Contract or termination of the services of Contractor.

17.05 *Controlling Law*

A. This Contract is to be governed by the law of the state in which the Project is located.

17.06 *Headings*

A. Article and paragraph headings are inserted for convenience only and do not constitute parts of these General Conditions.

ARTICLE 18 – FEDERAL REQUIREMENTS

18.01 *Agency Not a Party*

A. This Contract is expected to be funded in part with funds provided by Agency. Neither Agency, nor any of its departments, entities, or employees is a party to this Contract.

18.02 *Contract Approval*

A. Owner and Contractor will furnish Owner's attorney such evidence as required so that Owner's attorney can complete and execute the following "Certificate of Owner's Attorney" (Exhibit GC-A) before Owner submits the executed Contract Documents to Agency for approval.

B. Concurrence by Agency in the award of the Contract is required before the Contract is effective.

18.03 *Conflict of Interest*

A. Contractor may not knowingly contract with a supplier or manufacturer if the individual or entity who prepared the plans and specifications has a corporate or financial affiliation with the supplier or manufacturer. Owner's officers, employees, or agents shall not engage in the award or administration of this Contract if a conflict of interest, real or apparent, would be involved. Such a conflict would arise when: (i) the employee, officer or agent; (ii) any member of their immediate family; (iii) their partner or (iv) an organization that employs, or is about to employ, any of the above, has a financial interest in Contractor. Owner's officers, employees, or agents shall neither solicit nor accept gratuities, favors or anything of monetary value from Contractor or subcontractors.

18.04 *Gratuities*

A. If Owner finds after a notice and hearing that Contractor, or any of Contractor's agents or representatives, offered or gave gratuities (in the form of entertainment, gifts, or otherwise) to any official, employee, or agent of Owner or Agency in an attempt to secure this Contract or favorable treatment in awarding, amending, or making any determinations related to the performance of this Contract, Owner may, by written notice to Contractor, terminate this Contract. Owner may also pursue other rights and remedies that the law or this Contract provides. However, the existence of the facts on which Owner bases such findings shall be an issue and may reviewed in proceedings under the dispute resolution provisions of this Contract.

B. In the event this Contract is terminated as provided in Paragraph 18.04.A, Owner may pursue the same remedies against Contractor as it could pursue in the event of a breach of this Contract by Contractor. As a penalty, in addition to any other damages to which it may be entitled by law, Owner may pursue exemplary damages in an amount (as determined by Owner) which shall not be less than three nor more than ten times the costs Contractor incurs in providing any such gratuities to any such officer or employee.

18.05 *Audit and Access to Records*

A. Owner, Agency, the Comptroller General of the United States, or any of their duly authorized representatives shall have access to any books, documents, papers, and records of Contractor which are pertinent to the Agreement, for the purpose of making audits, examinations, excerpts, and transcriptions. Contractor shall maintain all required records for three years after final payment is made and all other pending matters are closed.

18.06 *Small, Minority and Women's Businesses*

A. If Contractor intends to let any subcontracts for a portion of the work, Contractor shall take affirmative steps to assure that small, minority and women's businesses are used when possible as sources of supplies, equipment, construction, and services. Affirmative steps shall consist of: (1) including qualified small, minority and women's businesses on solicitation lists; (2) assuring that small, minority and women's businesses are solicited whenever they are potential sources; (3) dividing total requirements when economically feasible, into small tasks or quantities to permit maximum participation of small, minority, and women's businesses; (4) establishing delivery schedules, where the requirements for the work permit, which will encourage participation by small, minority and women's businesses; (5) using the services and assistance of the Small Business Administration and the Minority Business Development Agency of the U.S. Department of Commerce; (6) requiring each party to a subcontract to take the affirmative steps of this section; and (7) Contractor is encouraged to procure goods and services from labor surplus area firms.

18.07 *Anti-Kickback*

A. Contractor shall comply with the Copeland Anti-Kickback Act (18 U.S.C. 874 and 40 U.S.C. 276c) as supplemented by Department of Labor regulations (29 CFR Part 3, "Contractors and Subcontractors on Public Buildings or Public Works Financed in

Whole or in Part by Loans and Grants of the United States.") The Act provides that Contractor or subcontractor shall be prohibited from inducing, by any means, any person employed in the construction, completion, or repair of public facilities, to give up any part of the compensation to which they are otherwise entitled. Owner shall report all suspected or reported violations to Agency.

18.08 *Clean Air and Pollution Control Acts*

A. If this Contract exceeds $100,000, Compliance with all applicable standards, orders, or requirements issued under section 306 of the Clean Air Act (42 U.S.C. 1857(h) and 42 U.S.C. 7401 et.seq.), section 508 of the Clean Water Act (33 U.S.C. 1368) and Federal Water Pollution Control Act (33 U.S.C. 1251 et seq.), Executive Order 11738, and Environmental Protection Agency regulations (40 CFR part 15) is required. Contractor will report violations to the Agency and the Regional Office of the EPA.

18.09 *State Energy Policy*

A. Contractor shall comply with the Energy Policy and Conservation Act (P.L. 94-163). Mandatory standards and policies relating to energy efficiency, contained in any applicable State Energy Conservation Plan, shall be utilized.

18.10 *Equal Opportunity Requirements*

A. If this Contract exceeds $10,000, Contractor shall comply with Executive Order 11246, "Equal Employment Opportunity," as amended by Executive Order 11375, "Amending Executive Order 11246 Relating to Equal Employment Opportunity," and as supplemented by regulations at 41 CFR part 60, "Office of Federal Contract Compliance Programs, Equal Employment Opportunity, Department of Labor."

B. Contractor's compliance with Executive Order 11246 shall be based on its implementation of the Equal Opportunity Clause, specific affirmative active obligations required by the Standard Federal Equal Employment Opportunity Construction Contract Specifications, as set forth in 41 CFR Part 60-4 and its efforts to meet the goals established for the geographical area where the Contract is to be performed. The hours of minority and female employment and training must be substantially uniform throughout the length of the Contract, and in each trade, and Contractor shall make a good faith effort to employ minorities and women evenly on each of its projects. The transfer of minority or female employees from Contractor to Contractor or from project to project for the sole purpose of meeting Contractor's goals shall be a violation of the Contract, the Executive Order, and the regulations in 41 CFR Part 60-4. Compliance with the goals will be measured against the total work hours performed.

C. Contractor shall provide written notification to the Director of the Office of Federal Contract Compliance Programs within 10 days of award of any construction subcontract in excess of $10,000 at any tier for construction work under the Contract resulting from this solicitation. The notification shall list the name, address, and telephone number of the subcontractor; employer identification number; estimated dollar amount of subcontract; estimated starting and completion dates of the subcontract; and the geographical area in which the Contract is to be performed.

18.11 *Restrictions on Lobbying*

A. Contractor and each subcontractor shall comply with Restrictions on Lobbying (Public Law 101-121, Section 319) as supplemented by applicable Agency regulations. This Law applies to the recipients of contracts and subcontracts that exceed $100,000 at any tier under a Federal loan that exceeds $150,000 or a Federal grant that exceeds $100,000. If applicable, Contractor must complete a certification form on lobbying activities related to a specific Federal loan or grant that is a funding source for this Contract. Each tier certifies to the tier above that it will not and has not used Federal appropriated funds to pay any person or organization for influencing or attempting to influence an officer or employee of any agency, a member of Congress, or an employee of a member of Congress in connection with obtaining any Federal contract, grant or any other award covered by 31 U.S.C. 1352. Each tier shall disclose any lobbying with non-Federal funds that takes place in connection with obtaining any Federal award. Certifications and disclosures are forwarded from tier to tier up to Owner. Necessary certification and disclosure forms shall be provided by Owner.

18.12 *Environmental Requirements*

In addition to complying with other environmental requirements and constraints described elsewhere in the Contract Documents, Contractor shall comply with the following environmental constraints:

A. Wetlands- When disposing of excess, spoil, or other construction materials on public or private property, Contractor shall not fill in or otherwise convert wetlands.

B. Floodplains- When disposing of excess, spoil, or other construction materials on public or private property, Contractor shall not fill in or otherwise convert 100 year floodplain areas delineated on the latest Federal Emergency Management Agency Floodplain maps, or other appropriate maps, i.e., alluvial soils on NRCS Soil Survey maps.

C. Historic Preservation- Any excavation by Contractor that uncovers an historical or archaeological artifact shall be immediately reported to Engineer, Owner, and representative of Agency. Construction shall be temporarily halted pending the notification process and further direction issued by Agency after consultation with the State Historic Preservation Officer (SHPO).

D. Endangered Species- Contractor shall comply with the Endangered Species Act, which provides for protection of endangered and/or threatened species and critical habitat. Should any evidence of the presence of endangered and/or threatened species or their critical habitat be brought to the attention of Contractor, Contractor will immediately report this evidence to Engineer, Owner, and a representative of Agency. Construction shall be temporarily halted pending notification process and further directions issued by Agency after consultation with the U.S. Fish and Wildlife Service.

E. Mitigation Measures- If the project had an Environmental Report, Environmental Assessment, or Environmental Impact Statement to meet the requirements of the National Environmental Policy Act, compliance with the mitigation measures, if any, in that document are hereby included as a condition of this Contract.

ARTICLE 19 – PROJECT SIGN

19.01 Contractor will place a temporary construction project sign at a location designated by Engineer. This sign measuring 4' x 8', will be made of 3/4" exterior grade plywood and adhere to the format and details given on the sheet at the end of this section. The sign will be prepared by a professional sign painter.

ARTICLE 20 – ADDITIONAL CALIFORNIA STATE REQUIREMENTS

20.01 In entering into a public works contract or a subcontract to supply goods, services, or materials pursuant to a public works contract, Contractor or Subcontractor offers and agrees to assign to the awarding body all rights, title, and interest in and to all causes of action it may have under Section 4 of the Clayton Act (15 U.S.C. Section 15) or under the Cartwright Act (Chapter 2 (commencing with Section 16700) of Part 2 of Division 7 of the Business and Professions Code), arising from purchases of goods, services, or materials pursuant to the public works contract or the subcontract. This assignment shall be made and become effective at the time the awarding body tenders final payment to Contractor, without further acknowledgment by the parties.

20.02 Unless otherwise indicated in the Contract Documents, all utility lines, conduits, wires, or structures shall be maintained by Contractor and shall not be disturbed, disconnected, or damaged by Contractor during the progress of the Work, provided, that should Contractor in the performance of the Work disturb, disconnect, or damage any of the above, all expenses arising from such disturbance or in the replacement or repair thereof shall be borne by Contractor. However, Contractor may be entitled to compensation in accordance with Section 4215 of the California Government Code if any existing main or trunkline utility facilities located on the Site are not indicated in the Contract Documents with reasonable accuracy.

20.03 Notwithstanding any other provision of law, every contract involving the expenditure of public funds in excess of Ten thousand dollars ($10,000) entered into by any state agency, board, commission, or department or by any other public entity, including a city, county, city and county, or district, shall be subject to the examination and audit of State auditor, at the request of the public entity or as part of any audit of the public entity, for a period of three (3) years after final payment under the Contract.

SECTION 00810

PROJECT SIGN

SEE NEXT PAGE

TEMPORARY CONSTRUCTION SIGN FOR RURAL DEVELOPMENT PROJECTS

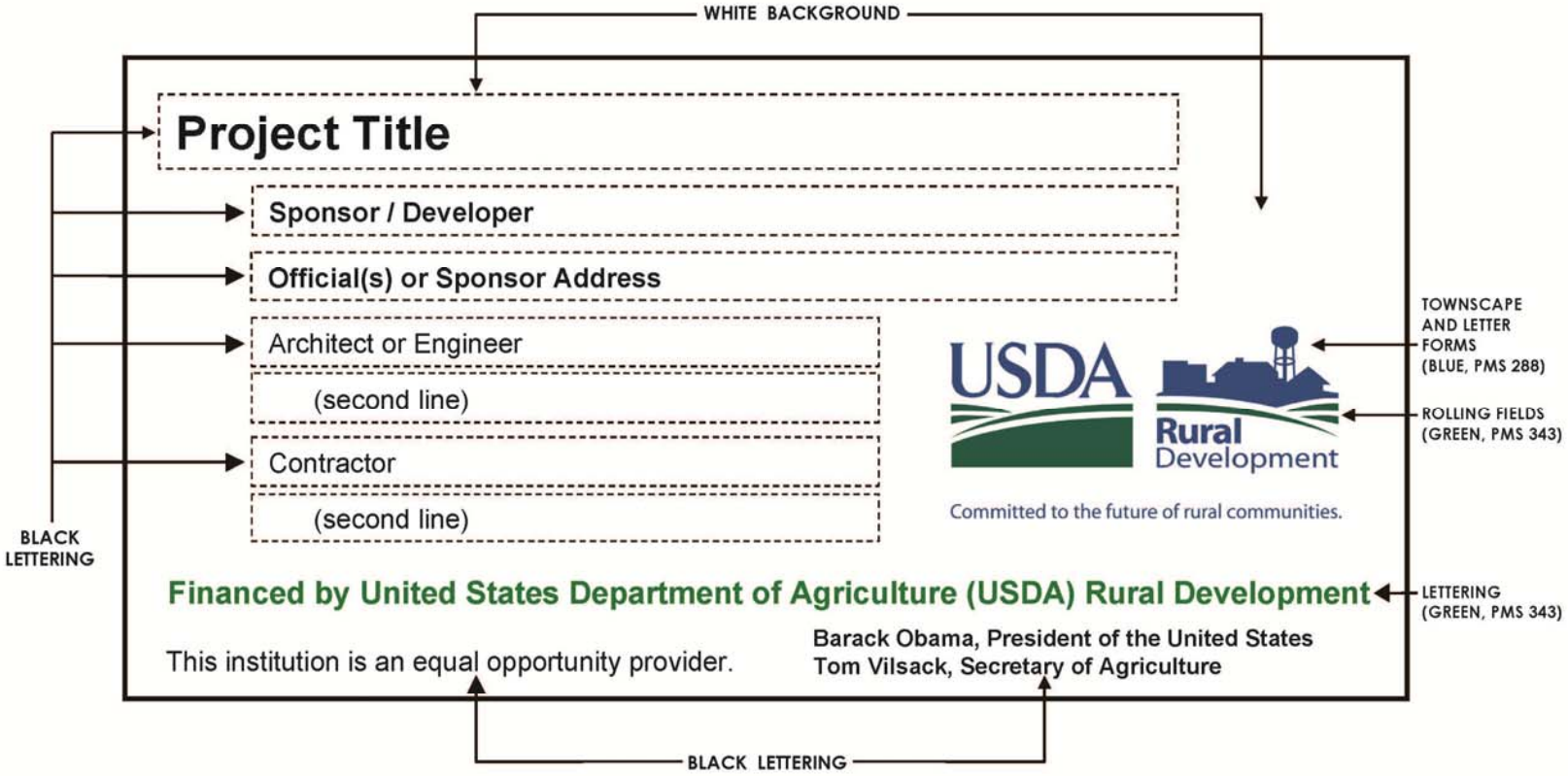

SIGN DIMENSIONS: 1200 mm x 2400 mm x 19 mm (approx. 4' x 8' x ¾")
PLYWOOD PANEL (APA RATED A-B GRADE–EXTERIOR)

SECTION 00815
EXHIBIT GC-A

CERTIFICATE OF OWNER'S ATTORNEY

I, the undersigned, _____, the duly authorized and acting legal representative of ____County of San Luis Obispo____, do hereby certify as follows:

I have examined the attached Contract(s) and performance and payment bond(s) and the manner of execution thereof, and I am of the opinion that each of the aforesaid agreements is adequate and has been duly executed by the proper parties thereto acting through their duly authorized representatives; that said representatives have full power and authority to execute said agreements on behalf of the respective parties named thereon; and that the foregoing agreements constitute valid and legally binding obligations upon the parties executing the same in accordance with the terms, conditions, and provisions thereof.

_____
(Attorney's Signature)

Date: _____

AGENCY CONCURRENCE

As lender or insurer of funds to defray the costs of this Contract, and without liability for any payments thereunder, the Agency hereby concurs in the form, content, and execution of this Agreement.

By: _____ Date: _____

Type Name: _____

END OF SECTION

SECTION 00820

	Contractor's Application for Payment No.	
	Application Period:	Application Date:
To (Owner):	From (Contractor):	Via (Engineer):
Project:	Contract:	
Owner's Contract No.:	Contractor's Project No.:	Engineer's Project No.:

Application For Payment
Change Order Summary

Approved Change Orders		
Number	Additions	Deductions
TOTALS		
NET CHANGE BY CHANGE ORDERS		

Contractor's Certification

The undersigned Contractor certifies that to the best of its knowledge: (1) all previous progress payments received from Owner on account of Work done under the Contract have been applied on account to discharge Contractor's legitimate obligations incurred in connection with Work covered by prior Applications for Payment; (2) title of all Work, materials and equipment incorporated in said Work or otherwise listed in or covered by this Application for Payment will pass to Owner at time of payment free and clear of all Liens, security interests and encumbrances (except such as are covered by a Bond acceptable to Owner indemnifying Owner against any such Liens, security interest or encumbrances); and (3) all Work covered by this Application for Payment is in accordance with the Contract Documents and is not defective.

By: Date:

1. ORIGINAL CONTRACT PRICE	**$**	
2. Net change by Change Orders	**$**	
3. Current Contract Price (Line 1 ± 2)	**$**	
4. TOTAL COMPLETED AND STORED TO DATE (Column F on Progress Estimate)	**$**	
5. RETAINAGE:		
a. X _____ **Work Completed**	**$**	
b. X _____ **Stored Material**	**$**	
c. Total Retainage (Line 5a + Line 5b)	**$**	
6. AMOUNT ELIGIBLE TO DATE (Line 4 - Line 5c)	**$**	
7. LESS PREVIOUS PAYMENTS (Line 6 from prior Application)	**$**	
8. AMOUNT DUE THIS APPLICATION	**$**	
9. BALANCE TO FINISH, PLUS RETAINAGE (Column G on Progress Estimate + Line 5 above)	**$**	

Payment of: $ _____
(Line 8 or other - attach explanation of the other amount)

is recommended by: _____ _____
(Engineer) (Date)

Payment of: $ _____
(Line 8 or other - attach explanation of the other amount)

is approved by: _____ _____
(Owner) (Date)

Approved by: _____ _____
Funding Agency (if applicable) (Date)

© 2007 National Society of Professional Engineers for EJCDC. All rights reserved.

Progress Estimate **Contractor's Application**

For (contract):	Application Number:
Application Period:	Application Date:

A		B	Work Completed		E	F		G
Item			C	D				
Specification Section No.	Description	Scheduled Value	From Previous Application (C+D)	This Period	Materials Presently Stored (not in C or D)	Total Completed and Stored to Date (C + D + E)	% (F) B	Balance to Finish (B - F)
	Totals							

© 2007 National Society of Professional Engineers for EJCDC. All rights reserved.

Progress Estimate **Contractor's Application**

For (contract):	Application Number:
Application Period:	Application Date:

A				B	C	D	E	F		
Item		Bid Quantity	Unit Price	Bid Value	Estimated Quantity Installed	Value	Materials Presently Stored (not in C)	Total Completed and Stored to Date (D + E)	% (F) B	Balance to Finish (B - F)
Bid Item No.	Description									
	Totals									

© 2007 National Society of Professional Engineers for EJCDC. All rights reserved.

Stored Material Summary **Contractor's Application**

For (contract):	Application Number:
Application Period:	Application Date:

A	B	C	D		E		F		G
Invoice No.	Shop Drawing Transmittal No.	Materials Description	Stored Previously		Stored this Month		Incorporated in Work		Materials Remaining in Storage ($) (D + E - F)
			Date (Month/Year)	Amount ($)	Amount ($)	Subtotal	Date (Month/Year)	Amount ($)	
		Totals							

© 2007 National Society of Professional Engineers for EJCDC. All rights reserved.

SECTION 00830
CHANGE ORDER

No. _____

Date of Issuance: _____ Effective Date: _____

Project:	Owner:	Owner's Contract No.:
Contract:		Date of Contract:
Contractor:		Engineer's Project No.:

The Contract Documents are modified as follows upon execution of this Change Order:

Description:

_____

Attachments (list documents supporting change):

_____

CHANGE IN CONTRACT PRICE:	**CHANGE IN CONTRACT TIMES:**
Original Contract Price: $_____	Original Contract Times: ☐ Working ☐ Calendar days Substantial completion (days or date): _____ Ready for final payment (days or date): _____
[Increase] [Decrease] from previously approved Change Orders No. _____ to No. $_____	[Increase] [Decrease] from previously approved Change Orders Substantial completion (days): _____ Ready for final payment (days): _____
Contract Price prior to this Change Order: $_____	Contract Times prior to this Change Order: Substantial completion (days or date): _____ Ready for final payment (days or date): _____
[Increase] [Decrease] of this Change Order: $_____	[Increase] [Decrease] of this Change Order: Substantial completion (days or date): _____ Ready for final payment (days or date): _____
Contract Price incorporating this Change $_____	Contract Times with all approved Change Orders: Substantial completion (days or date): _____ Ready for final payment (days or date): _____

RECOMMENDED:	ACCEPTED:	ACCEPTED:
By: _____	By: _____	By: _____
Engineer (Authorized	Owner (Authorized	Contractor (Authorized
Date: _____	Date: _____	Date: _____

Approved by Funding Agency (if applicable):

_____ Date: _____

CHANGE ORDER
INSTRUCTIONS

A. GENERAL INFORMATION

This document was developed to provide a uniform format for handling contract changes that affect Contract Price or Contract Times. Changes that have been initiated by a Work Change Directive must be incorporated into a subsequent Change Order if they affect Price or Times.

Changes that affect Contract Price or Contract Times should be promptly covered by a Change Order. The practice of accumulating Change Orders to reduce the administrative burden may lead to unnecessary disputes.

If Milestones have been listed in the Agreement, any effect of a Change Order thereon should be addressed.

For supplemental instructions and minor changes not involving a change in the Contract Price or Contract Times, a Field Order should be used.

B. COMPLETING THE CHANGE ORDER FORM

Engineer normally initiates the form, including a description of the changes involved and attachments based upon documents and proposals submitted by Contractor, or requests from Owner, or both.

Once Engineer has completed and signed the form, all copies should be sent to Owner or Contractor for approval, depending on whether the Change Order is a true order to the Contractor or the formalization of a negotiated agreement for a previously performed change. After approval by one contracting party, all copies should be sent to the other party for approval. Engineer should make distribution of executed copies after approval by both parties.

If a change only applies to price or to times, cross out the part of the tabulation that does not apply.

END OF SECTION

APPENDIX A

SPECIFICATIONS

SECTION 1

GENERAL REQUIREMENTS

1.01. Solid Waste Disposal and Recycling

For the purpose of complying with San Luis Obispo County Code, Title 8, Health and Sanitation, Chapter 8.12, "Solid Waste Management," Contractor shall recycle at least 50% of the construction and demolition waste generated by the Project.

The following is a list of IWMA-Certified Recycling Facilities:

C&D Recycling Facility at Cold Canyon Landfill 805-549-8332
C&D Recycling Facility at Chicago Grade Landfill 805-466-2985
North SLO County Recycling 805-434-0043
API (roll-off/debris box company) 805-928-8689
R&R (a roll-off/debris box company) 805-929-8000
Recycling Facility at the Paso Robles Landfill 805-238-2028
Santa Maria Transfer Station 805-922-9255
Bedford Enterprises/SMART 805-922-4977

Contractor shall complete and sign the Recycling Plan form in conformance with the provisions in Paragraph 2.05 of the General Conditions. This form must be submitted and approved by Owner prior to receiving the Notice to Proceed.

This form must show how at least 50% of the Project construction and demolition waste will be recycled. Contractor shall maintain receipts or other documentation for any facility or site that received waste from the Project.

Contractor shall submit a complete and accurate Disposal Report form with original receipts and supporting documentation. This form must be submitted and approved by Owner prior to receiving the Notice of Completion.

If Contractor fails to submit the required information showing the 50% recycling goal was met, the Owner could impose a penalty equal to 2 percent of the total Contract Price.

Full compensation for complying with these requirements shall be considered as included in the prices paid for the various items of work generating such construction and demolition waste and no additional compensation will be allowed therefor.

The Recycling Plan and Disposal Report forms are attached at the end of these General Requirements.

1.02. *Surface Mine and Reclamation Act*

Imported borrow or aggregate material must come from a surface mine permitted under the Surface Mining and Reclamation Act of 1975 (SMARA), Pub Res Code § 2710, et seq., or from an exempt site.

The Department of Conservation, Office of Mine Reclamation maintains a list of permitted mine sites. For the list of permitted sites, go to:

http://www.conservation.ca.gov/omr/ab_3098_list

If Contractor uses import borrow or aggregate material from a surface mine not on this list, Contractor shall submit proof the mine is exempt from SMARA to Engineer.

Full compensation for complying with these requirements shall be considered as included in the Contract Price and no additional compensation will be allowed therefor.

1.03. Trench Safety

Attention is directed to the requirements in Section 6705 of the Labor Code concerning trench excavation safety plans and Paragraph 6.13 of the General Conditions.

For all excavations in excess of five (5) feet, Contractor shall, pursuant to Labor Code Section 6705, submit in advance of any excavation hereunder a detailed plan showing the design of shoring, bracing, sloping, or other provisions to be made for worker protection from caving ground. No such excavation shall be made until said detailed plan is submitted by Contractor and accepted by Engineer. If such plan varies from the shoring system standards, the plan shall be prepared by a registered civil or structural engineer. Nothing in this paragraph shall be deemed to allow the use of a shoring, sloping, or protective system less effective than that required by the Construction Safety Orders of the California Division of Occupational Safety and Health.

Unless indicated otherwise in the Contract Documents, payment for compliance with the requirements of this paragraph shall be considered as included in the contract items of work involved and no separate payment will be made therefor.

1.04. Preservation of Property

Due care shall be exercised to avoid injury to existing highway improvements or facilities, utility facilities, adjacent property, and roadside trees, shrubs and other plants that are not to be removed.

Roadside trees, shrubs and other plants that are not to be removed, and pole lines, fences, signs, markers and monuments, buildings and structures, conduits, pipelines under or above ground, sewer and water lines, all highway facilities and any other improvements or facilities within or adjacent to the highway shall be protected from injury or damage, and if ordered by the Engineer, the Contractor shall provide and install suitable safeguards, approved by the Engineer, to protect the objects from injury or damage. If the objects are injured or damaged by reason of the Contractor's operations, the objects shall be replaced or restored in like kind at the Contractor's expense. The facilities shall be replaced or restored to a condition as good as when the Contractor entered upon the Work, or as good as required by the Contract Documents, if any of the objects are a part of the Work being performed under the Contract. The Engineer may make or cause to be made those temporary repairs that are necessary to restore to service any damaged highway facility. The cost of the repairs shall be borne by the Contractor and may be deducted from any moneys due or to become due to the Contractor under the Contract.

Pursuant to Section 8771(b) of the California Business and Professions Code, existing survey monuments that control the location of subdivisions, tracts, boundaries, roads, streets, or highways, or provide survey control that are within or adjacent to the Contractor’s operations, shall be located and referenced by or under the direction of a

licensed land surveyor or registered civil engineer prior to the time when any streets, highways, other rights-of-way, or easements are improved, constructed, reconstructed, maintained, resurfaced, or relocated. In the event that any existing survey monument is disturbed in any way by the Contractor's operations as determined by a licensed land surveyor or registered civil engineer, they shall be reset accordingly and a corner record shall be filed with the County Surveyor prior to the recording of a certificate of completion for the Project. Full compensation for furnishing all labor, materials, tools, equipment, and incidentals, and for doing all the Work involved in locating existing survey monuments by or under the direction of a licensed land surveyor or registered civil engineer, resetting any disturbed survey monument and filing a corner record, shall be considered as included in the Contract Price and no additional compensation will be allowed therefor.

The fact that any underground facility is not shown upon the Drawings shall not relieve the Contractor of its responsibilities under the Contract Documents. It shall be the Contractor's responsibility, pursuant thereto, to ascertain the location of those underground improvements or facilities which may be subject to damage by reason of the Contractor's operations. Attention is directed to the possible existence of underground facilities not indicated on the Drawings or Specifications and to the possibility that underground facilities may be in a location different from that which is indicated on the Drawings or Specifications.

Full compensation for furnishing all labor, materials, tools, equipment, and incidentals, and for doing all the Work involved in protecting or repairing property as specified in this paragraph, shall be considered as included in the Contract Price and no additional compensation will be allowed therefor.

1.05. Certificates of Compliance

Certificates of Compliance shall be furnished prior to the use of any materials for which the Contract Documents require that a certificate be furnished. In addition, when so authorized in the Contract Documents, Engineer may permit the use of certain materials or assemblies prior to sampling and testing if accompanied by a Certificate of Compliance. The certificate shall be signed by the manufacturer of the material or the manufacturer of assembled materials and shall state that the materials involved comply in all respects with the requirements of the Contract Documents. A Certificate of Compliance shall be furnished with each lot of material delivered to the Site and the lot so certified shall be clearly identified in the certificate.

Materials used on the basis of a Certificate of Compliance may be sampled and tested at any time. The fact that material is used on the basis of a Certificate of Compliance shall not relieve the Contractor of responsibility for incorporating material in the Work which conforms to the requirements of the Drawings and Specifications, and any material not conforming to the requirements will be subject to rejection whether in place or not.

Owner reserves the right to refuse to permit the use of material on the basis of a Certificate of Compliance.

The form of the Certificate of Compliance and its disposition shall be as directed by Engineer.

1.06. Disposal of Material Off Site

Contractor shall make arrangements for disposing of materials off Site and shall pay all costs involved. Arrangements shall include, but not be limited to, entering into agreements with property owners and obtaining necessary permits, licenses, and environmental clearances. Before disposing of any material off Site, Contractor shall furnish to Engineer satisfactory evidence that Contractor has entered into agreements with the property owners of the site involved and has obtained the permits, licenses, and clearances.

When any material is to be disposed of off Site, and the Owner has not made arrangements for disposal of the material, Contractor shall first obtain written authorization from the property owner on whose property the disposal is to be made and Contractor shall file with Engineer the authorization or a certified copy thereof together with a written release from the property owner absolving the Owner from any and all responsibility in connection with the disposal of material on the property. Before any material is disposed of on the property, Contractor shall obtain written permission from Engineer to dispose of the material at the location designated in the authorization.

When material is disposed of as above provided and the disposal location is visible from a highway, the Contractor shall dispose of the material in a neat and uniform manner to the satisfaction of the Engineer.

Where the Owner has made arrangements with owners of land in the vicinity of the Project for the disposal of materials on an owner's property, the arrangements are made solely for the purpose of providing all Bidders an equal opportunity to dispose of the materials on the property. Bidders or Contractors may, upon written request, inspect the documents evidencing the arrangements between property owners and the Owner. The Contractor may, if the Contractor so elects, exercise any rights that have been obtained, which may be exercised by a Contractor under the arrangements, subject to and upon the conditions hereinafter set forth.

Such arrangements are not a part of the Contract and it is expressly understood and agreed that the Owner assumes no responsibility to the Bidder or Contractor whatsoever in respect to the arrangements made with the property owner to dispose of materials thereon and that the Contractor shall assume all risks in connection with the use of the property, the terms upon which the use shall be made, and there is no warranty or guaranty, either express or implied, as to the quantity or types of materials that can be disposed of on the property.

The Bidder or Contractor is cautioned to make such independent investigation and examination as the Contractor deems necessary to be satisfied as to the quantity and types of materials which may be disposed of on the property and the rights, duties and obligations acquired or undertaken under the arrangement with the property owner.

Notwithstanding that the Contractor may elect to dispose of materials on any such property owner's property, no material may be disposed of on that property unless the Contractor has first either:

A. Executed a document that will guarantee to hold the owner harmless from all claims for injury to persons or damage to property resulting from the Contractor's operations on the property owner's premises and also agree to conform to all other provisions set forth in the arrangement made between the Owner and the property owner. The document will be prepared by the Engineer for execution by the Contractor, or

B. Entered into an agreement with the owner of the disposal site on any terms mutually agreeable to the owner and the Contractor; provided that the Contractor shall furnish to the Engineer a release, in a form satisfactory to the Engineer, executed by the owner, relieving the Owner of any and all obligations under the Owner's arrangement with the owner.

If the Contractor elects to dispose of material under (A), the use of the site shall be subject to the terms, conditions and limitations of the arrangement made between the property owner and the Owner and the Contractor shall pay those charges that are provided for in the arrangement made by the Owner with the property owner, and deductions will be made from any moneys due or that may become due the Contractor under the Contract sufficient to cover the charges for the material disposed of.

If the Contractor elects to dispose of material under (B), the Contractor shall pay those charges that are provided for in the agreement between the owner and the Contractor and deductions will not be made from any moneys due or that may become due the Contractor under the Contract to cover the charges.

Before acceptance of the Contract, the Engineer may require the Contractor to submit written evidence that the owner of the disposal site is satisfied that the Contractor has satisfactorily complied with the provisions of either - (A), the arrangement between the Owner and the owner, or (B), the agreement between the owner and the Contractor, as the case may be.

Full compensation for all costs involved in disposing of materials as specified in this paragraph, including all costs of hauling, shall be considered as included in the price paid for the contract item of work involving the materials and no additional compensation will be allowed therefor.

1.07. Public Convenience

This paragraph defines the Contractor's responsibility with regard to convenience of the public and public traffic in connection with the Contractor's operations.

Attention is directed to "Public Safety" of the General Requirements for provisions relating to the Contractor's responsibility for the safety of the public. The provisions in “Public Safety” are in addition to the provisions in this paragraph, and the Contractor will not be relieved of the responsibilities as set forth in “Public Safety” by reason of conformance with any of the provisions in this paragraph.

Attention is directed to Section 12, "Construction Area Traffic Control Devices," of the 2006 Caltrans Standard Specifications for provisions concerning flagging and traffic-handling equipment and devices used in carrying out the provisions in this paragraph and “Public Safety” of these General Requirements.

In the event of a suspension of the Work, attention is directed to Article 15 of the General Conditions.

The Contractor shall so conduct operations as to offer the least possible obstruction and inconvenience to the public and shall have under construction no greater length or amount of work than can be prosecuted properly with due regard to the rights of the public.

Unless otherwise provided in the Technical Specifications, all public traffic shall be permitted to pass through the Work with as little inconvenience and delay as possible. Where possible, public traffic shall be routed on new or existing paved surfaces.

Spillage resulting from hauling operations along or across any public traveled way shall be removed immediately by the Contractor at the Contractor's expense.

Existing traffic signals and highway lighting shall be kept in operation for the benefit of the traveling public during progress of the Work, and other forces will continue routine maintenance of existing systems.

Construction operations shall be conducted in such a manner as to cause as little inconvenience as possible to abutting property owners.

Convenient access to driveways, houses, and buildings along the line of the Work shall be maintained and temporary approaches to crossings or intersecting highways shall be provided and kept in good condition. When the abutting property owner's access across the right of way line is to be eliminated, or to be replaced under the Contract by other access facilities, the existing access shall not be closed until the replacement access facilities are usable.

The Contractor may be required to cover certain signs which regulate or direct public traffic to roadways that are not open to traffic. The Engineer will determine which signs shall be covered. Except as otherwise provided for construction area signs in Section 12, "Construction Area Traffic Control Devices," of the 2006 Caltrans Standard Specifications furnishing, installing and removing covers will be paid for as extra work as provided in Paragraph 11.01 of the General Conditions.

Roadway excavation and the construction of embankments shall be conducted in such a manner as to provide a reasonably smooth and even surface satisfactory for use by public traffic at all times; sufficient fill at culverts and bridges to permit traffic to cross shall be placed in advance of other grading operations; and if ordered by the Engineer roadway cuts shall be excavated in lifts and embankments constructed part width at a time, construction being alternated from one side to the other and traffic routed over the side opposite the one under construction. Culvert installation or culvert construction shall be conducted on but one-half the width of the traveled way at a time, and that portion of the traveled way being used by public traffic shall be kept open and unobstructed until the opposite side of the traveled way is ready for use by traffic.

Upon completion of rough grading at the grading plane, or placing any subsequent layer thereon, the surface of the roadbed shall be brought to a smooth, even condition free of humps and depressions, satisfactory for the use of public traffic.

After the surface of the roadbed has been brought to a smooth and even condition for the passage of public traffic as above provided, any work ordered by the Engineer for the accommodation of public traffic prior to commencing subgrade operations will be paid for as extra work as provided in Paragraph 11.01 of the General Conditions. After subgrade preparation for a specified layer of material has been completed, the Contractor shall, at the Contractor's expense, repair any damage to the roadbed or completed subgrade, including damage caused by the Contractor's operations or use by public traffic.

While subgrade and paving operations are underway, public traffic shall be permitted to use the shoulders and, if half-width paving methods are used, shall also be permitted to use the side of the roadbed opposite the one under construction. When sufficient width is available, a passageway wide enough to accommodate at least 2 lanes of traffic shall be kept open at locations where subgrade and paving operations are in active progress. Any shaping of shoulders or reshaping of subgrade necessary for the accommodation of public traffic thereon during subgrade preparation and paving operations will be paid for as extra work as provided in Paragraph 11.01 of the General Conditions.

Water or dust palliative shall be applied if ordered by the Engineer for the alleviation or prevention of dust nuisance as provided in "Dust Control" of these General Requirements.

In order to expedite the passage of public traffic through or around the Work and where ordered by the Engineer, the Contractor shall install signs, lights, flares, temporary railing (Type K), barricades and other facilities for the sole convenience and direction of public traffic. Also where directed by the Engineer, the Contractor shall furnish competent flaggers whose sole duties shall consist of directing the movement of public traffic through or around the Work. The cost of furnishing and installing the signs, lights, flares, temporary railing (Type K), barricades, and other facilities, not to be paid for as separate contract items, will be paid for as extra work as provided in Paragraph 11.01 of the General Conditions.

The cost of furnishing flaggers for the sole convenience and direction of public traffic will be paid for as provided in "Flagging Costs" of these General Requirements.

The Contractor will be required to pay the cost of replacing or repairing all facilities installed under extra work for the convenience or direction or warning of public traffic that are lost while in the Contractor's custody, or are damaged by reason of the Contractor's operations to such an extent as to require replacement or repair, and deductions from any moneys due or to become due the Contractor will be made to cover the cost.

Whenever a section of surfacing, pavement or the deck of a structure has been completed, the Contractor shall open it to use by public traffic if the Engineer so orders or may open it to use by public traffic if the Engineer so consents. In either case the Contractor will not be allowed any compensation due to any delay, hindrance or inconvenience to the Contractor's operations caused by public traffic, but will thereupon be relieved of responsibility for damage to completed permanent facilities caused by public traffic, within the limits of that use. The Contractor will not be relieved of any other

responsibility under the Contract nor will the Contractor be relieved of cleanup and finishing operations.

Except as otherwise provided in this paragraph or elsewhere in the Contract Documents, full compensation for conforming to the provisions in this paragraph shall be considered as included in the Contract Price and no additional compensation will be allowed therefor.

1.08. *Public Safety*

It is the Contractor's responsibility to provide for the safety of traffic and the public during construction.

Attention is directed to “Public Convenience" of these General Requirements for provisions relating to the Contractor's responsibility for providing for the convenience of the public in connection with the Contractor's operations.

Attention is directed to Section 12, "Construction Area Traffic Control Devices," for provisions concerning flagging and traffic-handling equipment and devices used in carrying out the provisions of this paragraph and “Public Convenience” of these General Requirements.

Whenever the Contractor's operations create a condition hazardous to traffic or to the public, the Contractor shall, at the Contractor's expense and without cost to the Owner, furnish, erect and maintain those fences, temporary railing (Type K), barricades, lights, signs and other devices and take such other protective measures that are necessary to prevent accidents or damage or injury to the public.

Fences, temporary railing (Type K), barricades, lights, signs, and other devices furnished, erected and maintained by the Contractor, at the Contractor's expense, are in addition to any construction area traffic control devices for which payment is provided for elsewhere in the Contract Documents.

The Contractor shall also furnish such flaggers as are necessary to give adequate warning to traffic or to the public of any dangerous conditions to be encountered, and payment therefor will be made as provided in “Flagging Costs” of these General Requirements.

Signs, lights, flags, and other warning and safety devices and their use shall conform to the requirements set forth in Part 6 of the California Manual on Uniform Traffic Control Devices (MUTCD). Signs or other protective devices furnished and erected by the Contractor, at the Contractor's expense, as above provided, shall not obscure the visibility of, nor conflict in intent, meaning and function of either existing signs, lights, and traffic control devices or any construction area signs and traffic control devices for which furnishing of, or payment for, is provided elsewhere in the Contract Documents. Signs furnished and erected by the Contractor, at the Contractor's expense, shall be approved by the Engineer as to size, wording, and location.

The installation of general roadway illumination shall not relieve the Contractor of the responsibility for furnishing and maintaining any of the protective facilities herein before specified.

Construction equipment shall enter and leave the highway via existing ramps and crossovers and shall move in the direction of public traffic. All movements of workmen and construction equipment on or across lanes open to public traffic shall be performed in a manner that will not endanger public traffic.

When leaving a work area and entering a roadway carrying public traffic, the Contractor's equipment, whether empty or loaded, shall in all cases yield to public traffic.

Lanes and shoulders shall be closed in accordance with the details shown on the Drawings, the provisions of Section 12, "Construction Area Traffic Control Devices," and as provided in the Technical Specifications.

The Contractor shall notify the Engineer not less than 18 days and not more than 90 days prior to the anticipated start of an operation that will change the vertical or horizontal clearance available to public traffic (including shoulders).

When vertical clearance is temporarily reduced to 15 feet, or less, low clearance warning signs shall be placed in accordance with the California MUTCD, and as directed by the Engineer. Signs shall conform to the dimensions, color, and legend requirements of the California MUTCD and this paragraph except that the signs shall have black letters and numbers on an orange retroreflective background. W12-2P signs shall be illuminated so that the signs are clearly visible.

No material or equipment shall be stored where it will interfere with the free and safe passage of public traffic, and at the end of each day's work and at other times when construction operations are suspended for any reason, the Contractor shall remove all equipment and other obstructions from that portion of the roadway open for use by public traffic.

Temporary facilities which the Contractor uses to perform the Work shall not be installed or placed where they will interfere with the free and safe passage of public traffic.

Temporary facilities which could be a hazard to public safety if improperly designed shall comply with design requirements specified in the Contract Documents for those facilities or, if none are specified, with standard design criteria or codes appropriate for the facility involved. Working drawings and design calculations for the temporary facilities shall be prepared and signed by an engineer who is registered as a Civil Engineer in the State of California and shall be submitted to the Engineer for approval pursuant to Paragraph 6.17 of the General Conditions. The submittals shall designate thereon the standard design criteria or codes used. Installation of the temporary facilities shall not start until the Engineer has reviewed and approved the drawings.

Should the Contractor appear to be neglectful or negligent in furnishing warning devices and taking protective measures as above provided, the Engineer may direct attention to the existence of a hazard and the necessary warning devices shall be furnished and installed and protective measures taken by the Contractor at the Contractor's expense. Should the Engineer point out the inadequacy of warning devices and protective measures, that action on the part of the Engineer shall not relieve the Contractor from responsibility for public safety or abrogate the obligation to furnish and pay for these devices and measures.

Provision for the payment for signs, lights, flares, temporary railing (Type K), barricades, and other facilities by extra work as provided in "Public Convenience" of these General Requirements or by contract item as provided in Section 12, "Construction Area Traffic Control Devices," shall in nowise relieve the Contractor from the responsibility as provided in this paragraph.

Except as otherwise provided in this paragraph or in the Technical Specifications, full compensation for conforming to all of the provisions in this paragraph shall be considered as included in the Contract Price and no additional compensation will be allowed therefor.

1.09. *Flagging Costs*

The cost of furnishing all flaggers, including transporting flaggers, to provide for passage of public traffic through the Work under the provisions in "Public Convenience" and "Public Safety" of these General Requirements will be borne equally by the Owner and the Contractor. The cost of providing stands or towers for use of flaggers shall be considered as part of the cost of furnishing flaggers. The division of cost will be made by determining the cost of furnishing flaggers in conformance with the provisions in Paragraph 11.01 of the General Conditions and paying to the Contractor one-half of that cost.

The provisions in this paragraph shall in no way relieve the Contractor from the responsibility of providing for the safety of the public as provided in "Public Safety" or these General Requirements, nor relieve the Contractor from the responsibility for damage as provided in the Contract Documents.

1.10. *Measurement of Quantities*

The Owner determines Bid item quantities under U.S. customary units.

Unless shipped by rail, material paid for by weight shall be weighed on scales**.** furnished by and at the expense of the Contractor or on other sealed scales regularly inspected by the Division of Measurement Standards or its designated representative.

Weighing measuring and metering devices used to measure the quantity of materials used in the Work shall be suitable for the purpose intended and shall conform to the tolerances and specifications as outlined in Title 4, Chapter 9 of the California Code of Regulations, the provisions of the California Business and Professions Code, Division 5, and these General Requirements. Devices not Type-approved by the Division of Measurement Standards shall be Type-approved in conformance with the requirements in California Test 109.

Elements of the material plant controller which affect the accuracy or delivery of data shall be made available for the application of security seals. These devices will be inspected and adjusting elements sealed prior to the first production of materials for the Contract. The security seals will be furnished by the Engineer. Material production shall cease when alteration, disconnection or otherwise manipulation of the security seals occur, and production shall not resume until the device is inspected and resealed by the Engineer.

Weighing, measuring, or metering devices used to determine the quantity of materials to be paid for will be considered to be "commercial devices" and shall be sealed by the Division of Measurement Standards or its authorized representative as often as the Engineer may deem necessary. The installation of all portable vehicle scales must be approved by the Engineer prior to sealing.

Vehicle scales shall be of sufficient size to permit the entire vehicle or combination of vehicles to rest on the scale deck while being weighed. Combination vehicles may be weighed as separate units provided they are disconnected while being weighed. The maximum concentrated load shall not exceed the manufacturer's designed sectional capacity of the scale.

Weighing, measuring, or metering devices required by these General Requirements for the purpose of proportioning a material or product will be considered to be "non-commercial devices" and shall be tested and approved in conformance with the requirements in California Test 109. This testing shall be done by one of the following, in the presence of the Engineer, as often as the Engineer deems necessary:

1. A County Sealer of Weights and Measures;

2. A Scale Service Agency; or

3. A Division of Measurement Standards Official.

The Contractor shall notify the Engineer at least 24 hours in advance of testing the device.

Undersupports for scale bearing points shall be constructed of portland cement concrete produced from commercial quality aggregates and cement, which contains not less than 470 pounds of cement per cubic yard. Undersupports shall be constructed in a manner to prevent any shifting or tilting of the support and shall have a minimum height of 14 inches above ground line. The footings shall have a minimum depth of 6 inches below the ground line. The bearing surface of the footings shall have a minimum width of 30 inches and shall be of sufficient area so the pressure does not exceed 4,000 pounds per square foot. Adequate drainage shall be provided to prevent saturation of the ground under the scale. Scale bulkheads shall be of adequate material and strength to resist displacement. If timber bulkheads are used, the minimum cross section shall be 8" x 8". Wedges shall not be used to shim the supports. If shimming is necessary, the shimming shall be done by securely attached metal shims, or by grouting. Shimming shall not exceed 3 inches. The approach ramps shall be level with the scale deck for a distance of not less than one-half the length of the scale deck. The mechanical indicating elements shall be installed level and plumb and shall be rigidly mounted upon a concrete foundation.

The lever system and mechanical indicating elements of hopper scales shall be rigidly attached to non-yielding supports in such a manner as to prevent any loss in weight due to bending and distortion of the supports.

When a multiple beam type scale is used in proportioning materials, an over and under indicator shall be provided which will give positive visible evidence of the amount of any

over and under weight. The indicator shall be so designed that the indicator will operate during the addition of the last 200 pounds of any weighing. The over-travel of the indicator shall be at least one-third of the loading travel. Indicators shall be enclosed against moisture and dust.

Over and under dials, and other indicators for weighing and measuring systems used in proportioning materials shall be grouped so that the smallest increment for each indicator can be accurately read from the point at which the proportioning operation is controlled.

The Contractor shall bear the expense of all service fees for testing and approving of "non-commercial devices." The cost of the equipment, labor and materials furnished by the Contractor to assist in the testing of weighing, measuring, or metering devices will be considered as included in the contract prices paid for the various contract items of work requiring the weighing, measuring, or metering and no separate payment will be made therefor.

Whenever pay quantities of materials are determined by weighing, the scales shall be operated by a weighmaster licensed in conformance with the requirements in the California Business and Professions Code, Division 5, Chapter 7. The Contractor shall furnish a Public Weighmaster’s certificate, or a private Wieghtmaster’s certificate (load slip) with each load and a Daily Record of Platform Scale Weights. The Weighmaster’s certificates shall be numbered consecutively to correspond with the Daily Record of Platform Scale Weights. The Daily Record of Platform Scale Weights shall be prepared using a form supplied by the Engineer (as approved by the Owner) and shall be delivered to the Engineer at the end of each day. Contractor shall provide the Engineer sufficient advance notice so as to enable a representative of the Engineer to be present to witness the Weighing and check the Daily Record of Platform

When required by the Engineer, the operator of each vehicle weighed shall obtain a weight or load slip from the weigher and deliver that slip to the Engineer at the point of delivery of the material.

If material is shipped by rail, the car weight will be accepted provided that actual weight of material only will be paid for and not minimum car weight used for assessing freight tariff, and provided further that car weight will not be acceptable for material to be passed through mixing plants.

Vehicles used to haul material being paid for by weight shall be weighed empty daily and at additional times as the Engineer may direct. Each vehicle shall bear a plainly legible identification mark. Vehicles may from time to time be required by the Engineer to have the weight of the material to be paid for verified by weighing the empty and loaded vehicle on such other scales as the Engineer may designate.

Materials which are specified for measurement by the cubic yard "measured in the vehicle" shall be hauled in vehicles of such type and size that the actual contents may be readily and accurately determined. Unless all vehicles are of uniform capacity, each vehicle must bear a plainly legible identification mark indicating its water level capacity. Vehicles shall be loaded to at least their water level capacity, and all loads shall be leveled when the vehicles arrive at the point of delivery. Loads hauled in vehicles not meeting the above requirements or loads of a quantity less than the capacity of the

vehicle, measured after being leveled off as above provided, will be subject to rejection, and no compensation will be allowed for that material.

When material is to be measured and paid for on a volume basis and it is impractical to determine the volume by the specified method of measurement, or when requested by the Contractor in writing and approved by the Engineer in writing, the material will be weighed in accordance with the requirements specified for weight measurement and the weight will be converted to volume measurement for payment purposes. Factors for conversion from weight measurement to volume measurement will be determined by the Engineer and shall be agreed to by the Contractor before that method of measurement of pay quantities will be adopted.

Quantities of material wasted or disposed of in a manner not called for under the Contract; or rejected loads of material, including material rejected after it has been placed by reason of the failure of the Contractor to conform to the provisions of the Contract; or material not unloaded from the transporting vehicle; or material placed outside of the lines indicated on the Drawings or established by the Engineer; or material remaining on hand after completion of the Work will not be paid for, and those quantities will be deducted from the final total quantities. No compensation will be allowed for hauling and disposing of rejected material.

The weight of all aggregate or other roadway material which is to be paid for on a weight basis, except imported borrow, imported topsoil, straw, fiber, aggregate subbases, aggregate bases or aggregate for cement treated bases, will be determined by deducting from the weight of material, the weight of water in the material at the time of weighing in excess of 3 percent of the dry weight of the material. When imported borrow, imported topsoil or aggregate subbase is being paid for on a weight basis, the weight to be paid for will be determined by deducting from the weight of the material, the weight of water in the material at the time of weighing in excess of 6 percent of the dry weight of the material. When straw is being paid for on a weight basis, the weight to be paid for will be determined by deducting from the weight of straw, the weight of water in the straw at the time of weighing in excess of 15 percent of the dry weight of the straw. When fiber is being paid for on a weight basis, the weight of water in the fiber at the time of weighing shall not exceed 15 percent of the dry weight of the fiber. No deduction will be made for the weight of water in fiber. The percentage of water in the material shall be determined by California Test 226. The weight of aggregate base and aggregate for cement treated bases which are to be paid for on a weight basis, will be determined as provided in Section 26, "Aggregate Bases," and Section 27, "Cement Treated Bases," of the 2006 Caltrans Standard Specifications as amended, respectively.

The weight of water deducted as provided in this paragraph will not be paid for.

Full compensation for all expense involved in conforming to the requirements specified in this paragraph shall be considered as included in the unit prices paid for the materials being measured or weighed and no additional compensation will be allowed therefor.

1.11. Areas for Contractor's Use

The right of way shall be used only for purposes that are necessary to perform the Work. The Contractor shall not occupy the right of way, or allow others to occupy the right of way, for purposes which are not necessary to perform the Work.

Areas available for the exclusive use of the Contractor, if applicable, are designated on the Drawings or referenced in the Technical Specifications. Use of the Contractor's work areas and other Owner-owned property shall be at the Contractor's own risk, and the Owner shall not be held liable for damage to or loss of materials or equipment located within these areas.

Residence trailers will not be allowed within the right of way, except that one trailer will be allowed for yard security purposes.

The Contractor shall secure, at the Contractor's own expense, areas required for plant sites, storage of equipment or materials, or for other purposes, if sufficient area is not available to the Contractor within the Contract limits, or at the sites designated on the Drawings outside the Contract limits.

1.12. Payments

A. Partial Payment

No partial payment will be made for any materials on hand which are furnished but not incorporated in the work.

B. Final Pay Items

When an item of work is designated as (F) in the Bid Form, the estimated quantity for that item of work shall be the final pay quantity, unless the dimensions of any portion of that item are revised by the Engineer, or the item or any portion of the item is eliminated. If the dimensions of any portion of the item are revised, and the revisions result in an increase or decrease in the estimated quantity of that item of work, the final pay quantity for the item will be revised in the amount represented by the changes in the dimensions, except as otherwise provided for minor structures in Section 51-1.22, "Measurement," of the 2006 Caltrans Standard Specifications If a final pay item is eliminated, the estimated quantity for the item will be eliminated. If a portion of a final pay item is eliminated, the final pay quantity will be revised in the amount represented by the eliminated portion of the item of work.

The estimated quantity for each item of work designated as (F) in the Bid Form shall be considered as approximate only, and no guarantee is made that the quantity which can be determined by computations, based on the details and dimensions shown on the Drawings, will equal the estimated quantity. No allowance will be made in the event that the quantity based on computations does not equal the estimated quantity.

In case of discrepancy between the quantity shown in the Bid Form for a final pay item and the quantity or summation of quantities for the same item shown on the Drawings, payment will be based on the quantity shown in the Bid Form.

RECYCLING PLAN FOR COUNTY PROJECTS

SECTION 1. PROJECT INFORMATION			
Contract Title	Contractor Name		
	Contractor Phone	Contractor Fax	
Contract Number	Street Address		
Total Contract Amount	City, State, Zip		
Print Name and Title	Signature	Date	

SECTION 2. RECYCLING PLAN					
	Before Construction (estimated tons)				
	Landfill	Recycling Facility		Reuse	
Materials	(Tons)	(Tons)	Location	(Tons)	Location
Cleared Vegetation					
Asphalt Concrete					
Concrete					
Metals (including spent equipment)					
Lumber					
Drywall					
Mixed Recyclables					
Trash					
Totals					
% Diversion					

Official Use Only		
Recycling Plan Approved ☐	Recycling Plan Denied ☐	
Information Required:		
Print Name and Title	Signature	Date

DISPOSAL REPORT FOR COUNTY PROJECTS

SECTION 1. PROJECT INFORMATION		
Contract Title	Contractor Name	
	Contractor Phone	Contractor Fax
Contract Number	Street Address	
Total Contract Amount	City, State, Zip	

Contractor Certification: I certify under penalty of perjury that the information provided in this form is complete and accurate.

Print Name and Title	Signature	Date

SECTION 2. DISPOSAL REPORT

	After Construction (actual tons)				
	Landfill	Recycling Facility		Reuse	
Materials	(Tons)	(Tons)	Location	(Tons)	Location
Cleared Vegetation					
Asphalt Concrete					
Concrete					
Metals (including spent equipment)					
Lumber					
Drywall					
Mixed Recyclables					
Trash					
Totals					
% Diversion					

I have reviewed and approved the information submitted in this report for completeness

Resident Engineer's Name:	Signature:	Date:

Official Use Only

Disposal Report Approved ☐	Disposal Report Denied ☐

Information Required

Print Name and Title	Signature	Date

SECTION 2

TECHNICAL SPECIFICATIONS

2.01. CODES AND REGULATIONS

The work performed under this contract shall be done in accordance with these Technical Specifications.

All materials, including coatings, installed in a public water system shall be certified as meeting the requirements of ANSI/NSF Standard 61, Drinking Water System Components-Health Effects, in addition to the requirements of the Safe Drinking Water Act.

2.02. REFERENCES

The publications listed below form a part of these Technical Specifications to the extent referenced. The publications are referred to in the text by basic designation only.

ACI	American Concrete Institute
ANSI	American National Standards Institute
ASTM	American Society for Testing and Materials
ASME	ASME International
AWWA	American Water Works Association
MSS	Manufacturers Standardization Society of the Valve and Fittings Industry
SSPC	The Society for Protective Coatings
NAPF	Nation Association for Pipe Fabricators
NSF	National Sanitation Foundation

2.03. HOURS OF WORK

Unless otherwise approved by the Engineer in writing, construction activities shall be limited to weekdays, between the hours of 8:00 a.m. and 5:00 p.m.

2.04. ORDER OF WORK

Order of work shall conform to the provisions in Section 5-1.05, “Order of Work” of the 2006 Caltrans Standard Specifications and these Technical Specifications.

The Contractor is responsible for sequencing the work and shall schedule items of work to accommodate the County’s operational requirements during the construction period. To prevent unnecessary interruption of the present water supply to the existing residents, the Contractor shall prepare a detailed schedule and submit it at least 10 days before the Contractor intends to begin construction. The Contractor is

responsible for coordinating the construction schedule and operations with the Engineer and these Technical Specifications herein, including the following requirements:

1. Attention is directed to "Water Pollution Control Program," of these Technical Specifications regarding the submittal and approval of the Water Pollution Control Program (WPCP) prior to performing construction activities. The Contractor shall not perform any construction activities until the WPCP is approved by the Engineer.

2. Attention is directed to "Construction Site Management" of these Technical Specifications regarding the implementation of the Best Management Practices prior to, during, and following construction activities.

3. After having received written notice to proceed, Contractor shall install the required construction area signs, including the USDA project sign, as the first item of site work in accordance with the County Special Provisions. Contractor shall schedule all other items of site work after the placement of construction area signs has been approved by the Engineer. No other site work will be allowed until the placement of the construction signs is completed.

4. Attention is directed to Section 00700, Paragraph 4.05 regarding notification to the Engineer for requesting stakes or marks to be set.

5. Attention is directed to the requirement that the Contractor must pothole each and every underground utility line and buried facility within proximity to excavations for the water distribution system upgrades including pipeline and appurtenances, service laterals, hydrant construction and/or replacements, blow-off and air/vacuum relief assemblies, connections to existing facilities, etc., to confirm the utility locations and to identify any conflicts with the proposed construction. Any such conflict noted by the Contractor shall be brought to the Engineer's attention immediately. The Contractor shall submit a report indentifying each underground utility, including photos (if required by the Engineer), information on depth and location. Confirmation of underground utility line locations relative to the buried water distribution system upgrades shall be reviewed, and adjusted if necessary, prior to commencement of excavation for the water distribution system upgrades.

6. The Contractor shall sequence and perform the work in order to minimize interruption to service and to maintain system operating pressures. To prevent unnecessary interruption of the present water supply to the existing system, the Contractor shall prepare and submit for review and approval by the Engineer a detailed plan and schedule of proposed work prior to construction. Such plan and schedule shall be submitted at least 5 days before the Contractor intends to begin construction.

   The contractor shall be responsible to notify affected water users of outages a minimum of 72 hours before the start of the work and any approved outage. The Contractor shall submit for approval the notification that will be sent to water

users regarding outages prior to distribution. The existing waterline supply system, including fire hydrants and service laterals, shall not be out of service for more than 8 hours and never before 9:00 a.m. or after 5:00 p.m. while the work of this Contract is performed. The Contactor shall make necessary special arrangements, such as provisions for temporary and permanent thrust restraint, quick setting concrete, availability of spare fitting/couplings, temporary connections, etc., to accomplish the connection and testing of the new water system improvements to minimize system shutdown period.

Payment for adhering to the order of work per this section shall be considered as included in the contract items of work involved and no separate payment will be made therefor.

7. The Drawings have been prepared to reflect continuous positive and/or negative grades, with low and/or high points and associated blow-off and/or air/vacuum relief assemblies in the locations indicated on the plans. It shall be the Contractor's responsibility to ensure constant positive and/or negative grades for the new waterline. The Contractor shall be responsible to pothole and verify the alignment of the new waterline shown on the plans prior to construction. Refer to "Obstructions" of these Technical Specifications for additional requirements.

   If any obstructions are noted that would prevent constant positive or negative grades, such conflicts shall be brought to the Engineer's attention immediately. If additional low or high points must be constructed in the waterline, the Contractor shall indentify such locations and notify the Engineer in writing immediately. Blow-off and/or air and vacuum relief assemblies shall be constructed by the Contractor at such locations in accordance with these Technical Specifications, and as directed by the Engineer.

8. The Contractor shall be required to obtain approval from the Engineer in writing at least 48 hours in advance for connection to existing water mains.

9. The Contractor shall provide all additional valving, blind flanges, and thrust restraint as necessary to isolate lines that have been tied into the existing system but are not yet completed and ready to operate in their intended function.

Payment for adhering to the Order of Work per this section shall be considered as included in the contract items of work involved and no separate payment will be made therefor.

2.05. CONSTRUCTION SITE MANAGEMENT

General

Summary

This work includes controlling potential sources of water pollution before they come in contact with storm water systems or watercourses.

Control material pollution and manage waste and non-stormwater at the job site by implementing effective handling, storage, use, and disposal practices.

For information on documents specified in these Technical Specifications, refer to

the Department's Preparation Manual, Dewatering Guide, and BMP Manual. Preparation Manual, Dewatering Guide, and BMP Manual are available from the Department's Construction Storm Water and Water Pollution Control web site at: http://www.dot.ca.gov/hq/construc/stormwater/stormwater1.htm

Definitions and Abbreviations

active and inactive areas: (1) Active areas have soil disturbing work activities occurring at least once within 14 days, and (2) Inactive areas are areas that have not been disturbed for at least 15 days.

BMP Manual: The Department's Construction Site Best Management Practices (BMP) Manual.

CDPH: California Department of Public Health

Dewatering Guide: The Department's Field Guide to Construction Site Dewatering.

ELAP: Environmental Laboratory Accreditation Program

Minor spills: Small quantities of oil, gasoline, paint, or other material that are small enough to be controlled by a first responder upon discovery of the spill.

MSDS: Material Safety Data Sheet

Preparation Manual: The Department's Storm Water Pollution Prevention Plan (SWPPP) and Water Pollution Control Program (WPCP) Preparation Manual.

Semi-significant spills: Spills that can be controlled by a first responder with help from other personnel.

Significant or hazardous spills: Spills that cannot be controlled by construction personnel.

WPC: Water Pollution Control

WPC Manager: Water Pollution Control Manager as defined under "Water Pollution Control" of these Technical Specifications.

Submittals

Submit the following:

1. MSDS at least 5 days before material is used or stored
2. Monthly inventory records for material used or stored
3. Copy of written approval to discharge into a sanitary sewer system at least 5 days before beginning discharge activities

Construction

Spill Prevention and Control

Implement spill and leak prevention procedures for chemicals and hazardous substances stored at the job site. If you spill or leak chemicals or hazardous substances at the job site, you are responsible for all associated cleanup costs and related liability.

As soon as it is safe, contain and clean up spills of petroleum products, sanitary and septic waste substances listed under CFR Title 40, Parts 110, 117, and 302.

Minor Spills

Clean up minor spills using the following procedures:

1. Contain the spread of the spill
2. Recover the spilled material by absorption
3. Clean the contaminated area
4. Dispose of the contaminated material promptly and properly

Semi-significant Spills

Clean up semi-significant spills immediately by the following procedures:

1. Contain the spread of the spill
2. Recover the spilled material using absorption whenever a spill occurs on a paved surface or an impermeable surface
3. Contain the spill with an earthen dike and dig up the contaminated soil for disposal whenever a spill occurs on soil
4. If the spill occurs during precipitation, cover the spill with plastic or other material to prevent contaminated runoff
5. Dispose of the contaminated material promptly and properly

Significant or Hazardous Spills

Immediately notify qualified personnel of significant or hazardous spills. Do not let construction personnel attempt to clean up the spill until qualified staff have arrived. Do the following:

1. Notify the Engineer and follow up with a written report
2. Obtain the services of a spills contractor or hazardous material team immediately
3. Notify the local emergency response team by dialing 911 and county officials at the emergency phone numbers kept at the job site
4. Notify the Governor's Office of Emergency Services Warning Center at (805) 852-7550
5. Notify the National Response Center at (800) 424-8802 regarding spills of Federal reportable quantities under CFR Title 40, Parts 110, 119, and 302
6. Notify other agencies as appropriate, including:
   - 6.1. Fire Department
   - 6.2. Public Works Department
   - 6.3. Coast Guard
   - 6.4. Highway Patrol
   - 6.5. County Sheriff Department
   - 6.6. Department of Toxic Substances
   - 6.7. California Division of Oil and Gas
   - 6.8. Cal OSHA
   - 6.9. Regional Water Resources Control Board

Report minor, semi-significant, and significant spills to the WPC Manager. The WPC Manager must notify the Engineer immediately. The WPC Manager must oversee and enforce proper spill prevention and control measures.

Prevent spills from entering storm water runoff before and during cleanup. Do not bury spills or wash spills with water.

Keep material or waste storage areas clean, well organized, and equipped with enough cleanup supplies for the material being stored.

Material Management

General

Material must be delivered, used, and stored for this job in a way that minimizes or eliminates discharge of material into the air, storm drain systems, and watercourses. Implement the practices described under "Material Management" of these Technical Specifications while taking delivery of, using, or storing any of the following materials:

1. Hazardous chemicals including acids, lime, glues, adhesives, paints, solvents, and curing compounds
2. Soil stabilizers and binders
3. Fertilizers
4. Detergents
5. Plaster
6. Petroleum materials including fuel, oil, and grease
7. Asphalt components and concrete components
8. Pesticides and herbicides

Employees trained in emergency spill cleanup procedures must be present during the unloading of hazardous materials or chemicals.
If practicable, use less hazardous materials.

Material Storage

Use the following material storage procedures:

1. Store liquids, petroleum materials, and substances listed in CFR Title 40, Parts 110, 117, and 302 as specified by the Department, and place them in secondary containment facilities.
2. Secondary containment facilities must be impervious to the materials stored there for a minimum contact time of 72 hours.
3. Cover secondary containment facilities during non-working days and when precipitation is predicted. Secondary containment facilities must be adequately ventilated.
4. Keep secondary containment facility free of accumulated rainwater or spills. After precipitation, or in the event of spills or leaks, collect accumulated liquid and place into drums within 24 hours. Handle these liquids as hazardous waste under "Hazardous Waste" of these Technical Specifications unless testing determines them to be nonhazardous.
5. Do not store incompatible materials, such as chlorine and ammonia, in the same secondary containment facility.
6. Store materials in the original containers with the original material labels maintained in legible condition. Replace damaged or illegible labels immediately.
7. Secondary containment facilities must have the capacity to contain precipitation from a 24-hour-long, 25-year storm, and 10 percent of the aggregate volume of all containers, or entire volume of the largest container within the facility, whichever is greater.
8. Store bagged or boxed material on pallets. Protect bagged or boxed material from wind and rain during non-working days and while precipitation is predicted.
9. Provide sufficient separation between stored containers to allow for spill cleanup or emergency response access. Storage areas must be kept clean, well organized, and equipped with cleanup supplies appropriate for the materials being stored.
10. Repair or replace perimeter controls, containment structures, covers, and liners as necessary. Inspect storage areas before and after precipitation, and at least weekly during other times.

Stockpile Management

Use the following stockpile management procedures:

1. Reduce or eliminate potential water pollution from stockpiled material including soil, paving material, and pressure treated wood.
2. Locate stockpiles:
   2.1. If within the floodplain, at least 100 feet from concentrated flows of storm water, drainage courses, and inlets unless approved
   2.2. If outside the floodplain, at least 50 feet from concentrated flows of storm water, drainage courses, and inlets unless approved

Install WPC practices within 15 days or before predicted precipitation, whichever occurs first.

Active and inactive soil stockpiles must be:

1. Covered with soil stabilization measures, plastic sheeting, or geosynthetic fabric
2. Surrounded with a linear sediment barrier

Portland cement concrete rubble, AC, HOT MIX ASPHALT, AC and HOT MIX ASPHALT rubble, aggregate base or aggregate sub-base stockpiles must be:

1. Covered with plastic sheeting, or geosynthetic fabric
2. Surrounded with a linear sediment barrier

Pressure treated wood stockpiles must be:

1. Placed on pallets
2. Covered with impermeable material

Cold mix asphalt concrete stockpiles must be:

1. Placed on impervious surface
2. Covered with impermeable material
3. Protected from run-on and runoff

Control wind erosion year round under Section 10, "Dust Control" of the 2006 Caltrans Standard Specifications.

Repair or replace linear sediment barriers and covers as needed to keep them functioning properly. If sediment accumulates to 1/3 of the linear sediment barrier height, remove the sediment.

Waste Management

Solid Waste

Do not allow litter or debris to accumulate anywhere at the job site, including storm drain grates, trash racks, and ditch lines. Pick up and remove trash and debris from the job site at least once a week. The WPC Manager must monitor solid waste storage and disposal procedures at the job site.

If practicable, recycle nonhazardous job site waste and excess material. If recycling is not practicable, disposal must comply with Section 7-1.13, "Disposal of Material Outside the Highway Right of Way" of the 2006 Caltrans Standard Specifications.

Furnish enough closed-lid dumpsters of sufficient size to contain any solid waste generated by work activities. When the refuse reaches the fill line, empty the dumpsters. Dumpsters must be watertight. Do not wash out dumpsters at the job site. Furnish additional containers and pick up dumpsters more frequent during the demolition phase of construction.

Solid waste includes:

1. Brick
2. Mortar
3. Timber
4. Metal scraps
5. Sawdust

6. Pipe
7. Electrical cuttings
8. Non-hazardous equipment parts
9. Styrofoam and other packaging materials
10. Vegetative material and plant containers from highway planting
11. Litter and smoking material, including litter generated randomly by the public
12. Other trash and debris

Furnish and use trash receptacles at the job site yard, field trailers, and locations where workers gather for lunch and breaks.

Hazardous Waste

Use hazardous waste management practices if waste is generated at the job site from the following substances:

1. Petroleum products
2. Asphalt products
3. Concrete curing compound
4. Pesticides
5. Acids
6. Paints
7. Stains
8. Solvents
9. Wood preservatives and treated posts
10. Roofing tar
11. Road flares
12. Lime
13. Glues and adhesives
14. Materials classified as hazardous by California Code of Regulations, Title 22, Division 4.5; or listed in CFR Title 40, Parts 110, 117, 261, or 302

The WPC Manager must oversee and enforce hazardous waste management practices. Minimize the production of hazardous materials and hazardous waste at the job site. If damaged, repair or replace perimeter controls, containment structures, and covers.

If hazardous material levels are unknown, use a laboratory certified by ELAP under CDPH to sample and test waste to determine safe methods for storage and disposal. Separate potentially hazardous waste from nonhazardous waste at the job site. Hazardous waste must be handled, stored, and disposed of under California Code of Regulations, Title 22, Division 4.5, Section 66262.34; and in CFR Title 49, Parts 261, 262, and 263.

Store hazardous waste in sealed containers constructed and labeled with the contents and date accumulated under California Code of Regulations, Title 22, Division 4.5; and in CFR Title 49, Parts 172, 173, 178, and 179. Keep hazardous waste containers in temporary containment facilities under "Material Storage" of these Technical Specifications.

Furnish containers with adequate storage volume at convenient locations for hazardous waste collection. Do not overfill hazardous waste containers. Do not mix hazardous wastes. Do not allow potentially hazardous waste to accumulate on the ground. Store containers of dry waste that are not watertight on pallets. Store hazardous waste away from storm drains, watercourses, moving vehicles, and equipment.

Clean water based or oil based paint from brushes or equipment within a contained area and in a way that does not contaminate soil, watercourses, and storm drain systems. Handle and dispose of the following as hazardous waste: paints, thinners, solvents, residues, and sludges that cannot be recycled or reused. When thoroughly dry, dispose of the following as solid waste: dry, latex paint and paint cans, used brushes, rags, absorbent materials, and drop cloths.

Dispose of hazardous waste within 90 days of being generated. Use a licensed hazardous waste transporter to take hazardous waste to a Class I Disposal Site. Submit a copy of uniform hazardous waste manifest forms within 24 hours of transporting hazardous waste.

The WPC Manager must inspect the following daily:

1. Storage areas for hazardous materials and wastes
2. Hazardous waste disposal and transporting activities
3. Hazardous material delivery and storage activities

Contaminated Soil

Identify contaminated soil from spills or leaks by noticing discoloration, odors, or differences in soil properties. Soil with evidence of contamination must be sampled and tested by a laboratory certified by ELAP.

If levels of contamination are found to be hazardous, handle and dispose of the soil as hazardous waste.

Prevent the flow of water, including ground water, from mixing with contaminated soil by using one or a combination of the following measures:

1. Berms
2. Cofferdams
3. Grout curtains
4. Freeze walls
5. Concrete seal course

If water mixes with contaminated soil and becomes contaminated, sample and test the water using a laboratory certified by ELAP. If levels of contamination are found to be hazardous, handle and dispose of the water as hazardous waste.

Concrete Waste

Use practices that will prevent the discharge of portland cement concrete, AC, or HOT MIX ASPHALT waste into storm drain systems or watercourses.

Collect and dispose of portland cement concrete, AC, or HOT MIX ASPHALT waste at locations where:

1. Concrete material, including grout, is used
2. Concrete dust and debris result from demolition
3. Sawcutting, coring, grinding, grooving, or hydro-concrete demolition of portland cement concrete, AC, or HOT MIX ASPHALT creates a residue or slurry
4. Concrete truck or other concrete-coated equipment is cleaned at the job site

Sanitary and Septic Waste

Do not bury or discharge wastewater from sanitary or septic systems within County right-of-way. The WPC Manager must inspect sanitary or septic waste storage and monitor disposal procedures at least weekly. Sanitary facilities that discharge to the sanitary sewer system must be properly connected and free from leaks. Place sanitary facilities at least 50 feet away from storm drains, watercourses, and flow lines.

Obtain written approval from the local health agency, city, county, and sewer district before discharging from a sanitary or septic system directly into a sanitary sewer system, and submit a copy to the Engineer. Comply with local health agency provisions while using an on-site disposal system.

Liquid Waste

Use practices that will prevent job site liquid waste from entering storm drain systems or watercourses. Liquid wastes include the following:

1. Drilling slurries or fluids
2. Grease-free or oil-free wastewater or rinse water
3. Dredgings, including liquid waste from drainage system cleaning
4. Liquid waste running off a surface including wash or rinse water
5. Other non-stormwater liquids not covered by separate permits

Hold liquid waste in structurally sound, leak proof containers such as:

1. Roll-off bins
2. Portable tanks

Liquid waste containers must be of sufficient quantity and volume to prevent overflow, spills and leaks.

Store containers:

1. At least 50 feet from moving vehicles and equipment
2. If within the floodplain, at least 100 feet from concentrated flows of storm water, drainage courses, watercourses, and storm drain inlets unless approved
3. If outside the floodplain, at least 50 feet from concentrated flows of storm water, drainage courses, watercourses, and storm drain inlets unless approved

Remove and dispose of deposited solids from sediment traps under "Solid Waste" of these Technical Specifications unless the Engineer approves another method.

Liquid waste may require testing to determine hazardous material content before disposal.

Drilling fluids and residue must be disposed of outside the highway right-of-way.

If an approved location is available within the job site, fluids and residue exempt under California Code of Regulations, Title 23, Section 2511(g) may be dried by evaporation in a leak proof container. Dispose of remaining solid waste under "Solid Waste" of these Technical Specifications.

Non-Storm Water Management

Water Control and Conservation

Manage water used for work activities to prevent erosion or discharge of pollutants into storm drain systems or watercourses. Obtain approval before washing anything at the job site with water that could discharge into a storm drain system or watercourse. Report discharges immediately.

If water is used at the job site, implement water conservation practices. Inspect irrigation areas. Adjust watering schedules to prevent erosion, excess watering, or runoff. Shut off water source to broken lines, sprinklers, or valves, and repair breaks within 24 hours. If possible, reuse water from waterline flushing for landscape irrigation. Sweep and vacuum paved areas; do not wash them with water.

Direct job site water runoff, including water from water line repair, to areas where it can infiltrate into the ground and not enter storm drain systems or watercourses. Do not allow spilled water to escape water truck filling areas. If possible, direct water

from off-site sources around the job site. Minimize the contact of off-site water with job site water.

Illegal Connection and Discharge Detection and Reporting

Inspect the job site and the site perimeter before starting work for evidence of illegal connections, discharges, or dumping. After starting work, inspect the job site and perimeter on a daily schedule.

Whenever illegal connections, discharges, or dumping are discovered, notify the Engineer immediately. Take no further action unless ordered by the Engineer. Assume unlabeled or unidentifiable material is hazardous.

Look for the following evidence of illegal connections, discharges, or dumping:

1. Debris or trash piles
2. Staining or discoloration on pavement or soils
3. Pungent odors coming from drainage systems
4. Discoloration or oily sheen on water
5. Stains or residue in ditches, channels or drain boxes
6. Abnormal water flow during dry weather
7. Excessive sediment deposits
8. Nonstandard drainage junction structures
9. Broken concrete or other disturbances near junction structures

Vehicle and Equipment Cleaning

Limit vehicle and equipment cleaning or washing at the job site except what is necessary to control vehicle tracking or hazardous waste. Notify the Engineer before cleaning vehicles and equipment at the job site with soap, solvents, or steam. Contain and recycle or dispose of resulting waste under "Liquid Waste" or "Hazardous Waste" of these Technical Specifications, whichever is applicable. Do not use diesel to clean vehicles or equipment, and minimize the use of solvents.

Clean or wash vehicles and equipment in a structure equipped with disposal facilities. If using a structure is not possible, clean or wash vehicles and equipment in an outside area. The outside area must be:

1. Paved with AC, HOT MIX ASPHALT, or concrete paving
2. Surrounded by a containment berm
3. Equipped with a sump to collect and dispose of wash water
4. If within the floodplain, located at least 100 feet from concentrated flows of storm water, drainage courses, watercourses, and storm drain inlets unless approved
5. If outside the floodplain, located at least 50 feet from concentrated flows of storm water, drainage courses, watercourses, and storm drain inlets unless approved

When washing vehicles or equipment with water, use as little water as possible. Hoses must be equipped with a positive shutoff valve.

Discharge liquid from wash racks to a recycle system or to another approved system. Remove liquids and sediment as necessary.

The WPC Manager must inspect vehicle and equipment cleaning facilities:

1. Daily if vehicle and equipment cleaning occurs daily
2. Weekly if vehicle and equipment cleaning does not occur daily

Vehicle and Equipment Fueling and Maintenance

If practicable, perform maintenance on vehicles and equipment off the job site.
If fueling or maintenance must be done at the job site, designate a site, or sites, and obtain approval before using. Minimize mobile fueling or maintenance.
If vehicle and equipment fueling and maintenance must be done at the job site, areas for the following activities must be:

1. On level ground
2. Protected from storm water run-on
3. If within the floodplain, located at least 100 feet from concentrated flows of storm water, drainage courses, watercourses, and storm drain inlets unless approved
4. If outside the floodplain, located at least 50 feet from concentrated flows of storm water, drainage courses, watercourses, and storm drain inlets unless approved

Use containment berms or dikes around the fueling and maintenance area. Keep adequate quantities of absorbent spill cleanup material and spill kits in the fueling and maintenance area and on fueling trucks. Dispose of spill cleanup material and kits immediately after use. Use drip pans or absorbent pads during fueling or maintenance.
Fueling or maintenance activities must not be left unattended. Fueling nozzles must be equipped with an automatic shutoff control. Vapor recovery fueling nozzles must be used where required by the Air Quality Management District. When not in use, nozzles must be secured upright. Do not top-off fuel tanks.
Recycle or properly dispose of used batteries and tires.
The WPC Manager must inspect vehicle and equipment maintenance and fueling areas:

1. Daily when vehicle and equipment maintenance and fueling occurs daily
2. Weekly when vehicle and equipment maintenance and fueling does not occur daily

The WPC Manager must inspect vehicles and equipment at the job site for leaks and spills on a daily schedule. Operators must inspect vehicles and equipment each day of use.
If leaks cannot be repaired immediately, remove the vehicle or equipment from the job site.

Material and Equipment Used Over Water

Place drip pans and absorbent pads under vehicles or equipment used over water. Keep an adequate supply of spill cleanup material with the vehicle or equipment. If the vehicle or equipment will be idle for more than one hour, place drip pans or plastic sheeting under the vehicle or equipment on docks, barges, or other surfaces over water.
Furnish watertight curbs or toe boards on barges, platforms, docks, or other surfaces over water to contain material, debris, and tools. Secure material to prevent spills or discharge into water due to wind.

Structure Removal Over or Adjacent to Water

Do not allow demolished material to enter storm water systems or watercourses. Use approved covers and platforms to collect debris. Use attachments on equipment to catch debris on small demolition activities. Empty debris catching devices daily and handle debris under "Waste Management" of these Technical Specifications.

The WPC Manager must inspect demolition sites within 50 feet of storm water systems or watercourses daily.

Paving, Sealing, Sawcutting, Grooving, and Grinding Activities

Prevent the following materials from entering storm drain systems or water courses:

1. Cementitious material
2. Asphaltic material
3. Aggregate or screenings
4. Grinding grooving, or sawcutting residue
5. Pavement chunks
6. Shoulder backing
7. Methacrylate

Cover drainage inlets and use linear sediment barriers to protect downhill watercourses until paving, sealing, sawcutting, grooving, or grinding activities are completed and excess material has been removed. Cover drainage inlets and manholes during the application of seal coat, tack coat, slurry seal, or fog seal.

If precipitation is predicted, limit paving, sawcutting, and grinding to places where runoff can be captured.

Do not start seal coat, tack coat, slurry seal, or fog seal activities if precipitation is predicted during the application or curing period. Do not excavate material from existing roadways during precipitation.

Use a vacuum to remove slurry immediately after slurry is produced. Do not allow slurry to run onto lanes open to traffic or off the pavement.

Collect residue from portland cement concrete grinding and grooving activities with a vacuum attachment on the grinding machine. Do not leave any residue on the pavement or allow the residue to flow across the pavement.

If approved, material excavated from existing roadways may be stockpiled under "Stockpile Management" of these Technical Specifications.

Do not coat asphalt trucks and equipment with substances that contain soap, foaming agents, or toxic chemicals.

When paving equipment is not in use, park over drip pans or plastic sheeting with absorbent material to catch drips.

Thermoplastic Striping and Pavement Markers

Thermoplastic striping and preheating equipment shutoff valves must work properly at all times. Do not preheat, transfer, or load thermoplastic within 50 feet of drainage inlets or watercourses. Do not fill a preheating container above a level that is 6 inches below the top. Truck beds must be cleaned daily of scraps or melted thermoplastic.

Do not unload, transfer, or load bituminous material for pavement markers within 50 feet of drainage inlets or watercourses. Release all pressure from a melting tank before removing the lid to fill or service. Do not fill a melting tank above a level that is 6 inches below the top.

Collect bituminous material from the roadway after marker removal.

Pile Driving

Keep spill kits and cleanup material at pile driving locations. Pile driving equipment must be parked over drip pans, absorbent pads, or plastic sheeting with absorbent material. If precipitation is predicted, protect pile driving equipment by parking on

plywood and covering with plastic.
Store pile driving equipment when not in use. Stored pile driving equipment must be:
1. Kept on level ground
2. Protected from storm water run-on
3. If within the floodplain, at least 100 feet from concentrated flows of storm water, drainage courses, watercourses, and storm drain inlets unless approved
4. If outside the floodplain, at least 50 feet from concentrated flows of storm water, drainage courses, watercourses, and storm drain inlets unless approved

If practicable, use vegetable oil instead of hydraulic fluid.
The WPC Manager must inspect the pile driving area for leaks and spills:
1. Daily when pile driving occurs daily
2. Weekly when pile driving does not occur daily

Concrete Curing
Do not overspray chemical curing compound. Minimize the drift by spraying as close to the concrete as possible. Cover drainage inlets before applying the curing compound.
Minimize the use and discharge of water by using wet blankets or similar methods to maintain moisture while curing concrete.

Concrete Finishing
Collect and dispose of water and solid waste from high-pressure water blasting. Cover drainage inlets within 50 feet before sandblasting. Minimize drift of dust and blast material by keeping the nozzle close to the surface of the concrete. The blast residue may contain hazardous material.
Inspect concrete finishing containment structures for damage before each day of use and before predicted precipitation. Remove liquid and solid waste from containment structures after each work shift.

Sweeping
Sweeping must be done using hand or mechanical methods such as vacuuming.
Monitor paved areas and roadways within the job site for sediment and debris generating activities such as:
1. Clearing and grubbing
2. Earthwork
3. Trenching
4. Roadway structural section work
5. Vehicles entering and leaving the job site
6. Soil disturbing work
7. Work that causes offsite tracking of material

If sediment or debris is observed, perform sweeping:
1. Within:
   1.1. 8 hours of predicted rain
   1.2. 24 hours unless the Engineer approves a longer period
2. On paved roads at job site entrances and exit locations
3. On paved areas within the job site that flow to storm drains or receiving waters

You may stockpile collected material at the job site. Remove collected material including sediment from paved shoulders, drain inlets, curbs and dikes, and other drainage areas. If stockpiled, dispose of collected material at least once per week.

You may dispose of sediment within the job site that you collected during sweeping activities. Protect disposal areas against erosion.
Remove and dispose of trash collected during sweeping under Section 7-1.13, "Disposal of Material Outside the Highway Right of Way" of the 2006 Caltrans Standard Specifications.

Dewatering
Dewatering consists of discharging accumulated storm water, ground water, or surface water from excavations or temporary containment facilities.
If dewatering and discharging activities are specified under a work item such as "Temporary Active Treatment System" or "Dewatering and Discharge," perform dewatering work as specified in the section involved.
If dewatering and discharging activities are not specified under a work item and you will be performing dewatering activities, you must:

1. Submit a Dewatering and Discharge Plan under Section 5-1.02, "Plans and Working Drawings," of the 2006 Caltrans Standard Specifications and "Water Pollution Control" of these Technical Specifications at least 10 days before starting dewatering activities. The Dewatering and Discharge Plan must include:
   1.1. Title sheet and table of contents
   1.2. Description of dewatering and discharge activities detailing locations, quantity of water, equipment, and discharge points
   1.3. Estimated schedule for dewatering and discharge (start and end dates, intermittent or continuous)
   1.4. Discharge alternatives such as dust control or percolation
   1.5. Visual monitoring procedures with inspection log
2. Conduct dewatering activities under the Department's "Field Guide for Construction Dewatering."
3. Ensure that any dewatering discharge does not cause erosion, scour, or sedimentary deposits that could impact natural bedding materials.
4. Discharge the water within the project limits. Dispose of the water in the same way as specified for material in Section 7-1.13, "Disposal of Material Outside the Highway Right of Way," of the Standard Specification if it cannot be discharged within project limits due to site constraints.
5. Do not discharge storm water or non-stormwater that has an odor, discoloration other than sediment, an oily sheen, or foam on the surface. Notify the Engineer immediately upon discovering any such condition.

The WPC manager must inspect dewatering activities:

1. Daily when dewatering work occurs daily
2. Weekly when dewatering work does not occur daily

Payment: Full compensation for construction site management, including furnishing all labor, materials, tools, equipment, and incidentals and for fully complying with the provisions in this section and for doing all the work involved in spill prevention and control, material management, waste management, non-storm water management, and dewatering and identifying, sampling, testing, handling, and disposing of hazardous waste resulting from contractor activities, as specified in the 2006 Caltrans Standard Specifications and these Technical Specifications, and as directed by the Engineer, shall be considered as included in the contract price paid

for the various items of work involved and no separate payment will be made therefor.

2.06. ENCOUNTERING CULTURAL RESOURCES

The County's qualified archaeologist shall be present during excavation activities at Hacienda and Shearer and at Shearer and Chaney to monitor ground disturbance activities to ensure there is no disturbance of cultural remains in the project impact area. The Contractor shall be responsible to ensure coordination with the County's qualified archeology monitor is at least two weeks in advance of work in these areas.

During earth moving activities, in the event archaeological resources are unearthed or discovered, construction in the vicinity of the find shall stop, and the Engineer shall be notified so that the extent and location of discovered materials may be recorded by a qualified archaeologist, and disposition of artifacts may be accomplished in accordance with state and federal law.

In the event archaeological resources are found to include human remains, or in any other case when human remains are discovered during construction, the following standard shall apply:

a. The County Coroner and Environmental Coordinator are to be notified so proper disposition may be accomplished.

b. Construction activities shall cease, and the Environmental Coordinator and Planning Department shall be notified so that the extent and location of discovered materials may be recorded by a qualified archaeologist, and disposition of artifacts may be accomplished in accordance with state and federal law.

2.07. CONTRACTOR'S STORAGE AREA

The Contractor shall coordinate with the Engineer to determine the Contractor's storage area. As directed by the Engineer, the County will make available for the Contractor's use a portion of the County Service Area 10 water treatment plant yard at 1670 Cabrillo Ave, Cayucos. Any other areas the Contractor proposes to use shall be reviewed and approved by the Engineer. The Contractor shall be responsible for his/her own security and weatherproofing. Missing or damaged material shall be replaced by the Contractor at no additional charge. Use of the staging area shall be subject to the approval of the Engineer and the Contractor shall be required to restore the site to the satisfaction of the Engineer after construction.

2.08. ELECTRICAL POWER

The Contractor shall furnish all power required for performance of all the work in this contract.

2.09. WATERING

Watering shall conform to the provisions in Section 17, “Watering,” of the 2006 Caltrans Standard Specifications, except that County Service Area 10A (CSA 10A) will permit the Contractor to use water from the existing water system free of charge for his construction operations on this project only. CSA 10A will provide a construction water meter for the Contractor’s use in extracting water from the existing CSA 10A waterline system. The Contractor may obtain water from an existing system outlet provided the Contractor provides and utilizes an approved backflow device. Extravagant, inappropriate or wasteful use of water will result in charges to the Contractor for excess water used as determined by the Engineer. Payment for watering shall be considered as included in the contract items of work involved and no separate payment will be made therefor.

2.10. WATER POLLUTION CONTROL PROGRAM

The work includes preparing a WPCP, obtaining WPCP acceptance, amending the WPCP, and reporting on water pollution control practices at the job site. The WPCP must comply with the Preparation Manual. The WPCP is required by the provisions in Section 7-1.01G, "Water Pollution," of the 2006 Caltrans Standard Specifications, and these Technical Specifications.

You may request, or the Engineer may order, changes to the water pollution control work. Changes may include addition of new water pollution control practices. Additional water pollution control work is change order work.

The WPCP must include water pollution control practices:

1. For storm water and non-stormwater from areas outside of the job site related to project work activities such as:

    1.1. Staging areas

    1.2. Storage yards

    1.3. Access roads

2. For activities or mobile operations related to contractor obtained NPDES permits

3. Construction support facilities

The WPCP must include a copy of permits obtained by the County such as Fish & Game permits, US Army Corps of Engineers permits, RWQCB 401 Certifications, and RWQCB Waste Discharge Requirements for Aerially Deposited Lead Reuse.

WPCP Amendments

You must amend the WPCP when:

1. Changes in work activities could affect the discharge of pollutants

2. Water pollution control practices are added by change order work

3. Water pollution control practices are added by your discretion

If you amend the WPCP, follow the same process specified for WPCP acceptance.

Retain a printed copy of the accepted WPCP at the job site.

WPCP Schedule

The WPCP schedule must:

1. Describe when work activities will be performed that could cause the discharge of pollutants in storm water

2. Describe water pollution control practices associated with each construction phase

3. Identify soil stabilization and sediment control practices for disturbed soil areas

Implementation Requirements: Monitor the National Weather Service Forecast Office on a daily basis. For forecasts, go to:

http://www.srh.noaa.gov/forecast

Whenever you or the Engineer identifies a deficiency in the implementation of the accepted WPCP:

1. Correct the deficiency immediately, unless the Engineer authorizes an agreed date for correction

2. Correct the deficiency before precipitation occurs

If you fail to correct the deficiency by the agreed date or before the onset of precipitation, the County may correct the deficiency and deduct the cost of correcting the deficiency from payment.

If you fail to comply with "Water Pollution Control" of these Special Provisions, the Engineer will order a suspension of work until the project complies with the requirements of "Water Pollution Control" of these Special Provisions.

The Contractor's responsibility for WPCP implementation shall continue throughout any temporary suspension of work ordered in conformance with the provisions in Section 8-1.05, "Temporary Suspension of Work," of the Standard Specifications.

Install water pollution control practices within 15 days or before predicted precipitation, whichever occurs first except as required sooner as required elsewhere by these Special Provisions.

If actions for the Contractor’s convenience disturb one or more acres, the Contractor must pay all costs and be responsible for all delays associated with complying with Order No. 2009-0009-DWQ, NPDES General Permit No. CAS000002) issued by the

SWRCB for "Storm Water Discharges Associated with Construction and Land Disturbance Activities." The General Permit is available at:

http://www.waterboards.ca.gov/

Inspection

The Water Pollution Control Manager must oversee inspections for water pollution control practices identified in the WPCP:

1. Before a forecasted storm

2. After precipitation that causes site runoff

3. At 24-hour intervals during extended precipitation

4. On a predetermined schedule, a minimum of once a week

The Water Pollution Control Manager must oversee daily inspections of:

1. Storage areas for hazardous materials and wastes

2. Hazardous waste disposal and transporting activities

3. Hazardous material delivery and storage activities

4. Water pollution control practices specified under "Construction Site Management" of these Special Provisions

The Water Pollution Control Manager must use the Storm Water Site Inspection Report provided in the Preparation Manual.

The Water Pollution Control Manager must prepare BMP status reports that include the following:

1. Location and quantity of installed water pollution control practices

2. Location and quantity of disturbed soil for the active or inactive areas

Within 24 hours of finishing the weekly inspection, the Water Pollution Control Manager must submit:

1. Copy of the completed site inspection report

2. Copy of the BMP status report

Reporting Requirements

If the following occur, notify the Engineer within 6 hours:

1. You identify discharges into receiving waters or drainage systems causing or potentially causing pollution

2. The job receives a written notice or order from a regulatory agency

No later than 48 hours after the conclusion of a storm event resulting in a discharge, a non-stormwater discharge, or receiving the notice or order, submit:

1. Date, time, location, and nature of the activity, type of discharge and quantity, and the cause of the notice or order

2. Water pollution control practices used before the discharge, or before receiving the notice or order

3. Description of water pollution control practices and corrective actions taken to manage the discharge or cause of the notice.

Payment: If you fail to comply with "Water Pollution Control" of these Technical Specifications or fail to implement water pollution control practices during each estimate period, the County withholds 25 percent from progress payment.

Withholds for failure to perform water pollution control work are in addition to all other withholds provided for in the contract. The County returns performance-failure withholds in the progress payment following the correction for noncompliance.

Full compensation for preparing and implementing a water pollution control program, including furnishing all labor, materials, tools, equipment, and incidentals and for doing all the work involved in preparing, obtaining acceptance of, and amending the WPCP and inspecting water pollution control practices as specified in the 2006 Caltrans Standard Specifications, these Technical Specifications, and as directed by the Engineer, shall be considered as included in the contract price paid for the various items of work involved and no separate payment will be made therefor.

The County does not pay for implementation of water pollution control practices in areas outside the highway right-of-way not specifically provided for in the drawings or in the Special Provisions.

The County does not pay for water pollution control practices installed at construction support facilities.

Water pollution control practices for which there are separate bid items of work are measured and paid for as those bid items of work.

2.11. AIR POLLUTION CONTROL

Air Pollution Control will be required for this project and shall conform to the provisions in Section 7-1.01F, "Air Pollution Control," of the 2006 Caltrans Standard Specifications.

All portable internal combustion engines and other portable equipment used during construction activities and rated at 50 HP or above shall possess a California statewide portable equipment registration (issued by the California Air Resources

Board). If any such portable equipment does not posses said registration, Contractor shall acquire a Permit to Operate for the unregistered equipment from the Sand Luis Obispo County Air Pollution Control District ("APCD"). For more information, contact the APCD at 805-781-5912.

During construction/ground disturbing activities, the contractor shall implement the following measures to reduce ozone precursor emission. These measures are as follows:

a. The Contractor shall maintain all construction equipment in proper tune according to manufacturer's specifications.

b. To reduce ozone precursor emissions, fuel all off-road and portable diesel powered equipment, including but not limited to bulldozers, graders, cranes, loaders, scrapers, backhoes, generator sets, compressors, auxiliary power units, with ARB certified motor vehicle diesel fuel (non-taxed version suitable for use off-road).

c. Maximize to the extent feasible, the use of diesel construction equipment meeting the ARB's 1996 or newer certification standard for off-road heavy-duty diesel engines.

Payment for conforming to the requirements of this section shall be considered as included in the contract items of work involved and no separate payment will be made therefor.

2.12. DUST CONTROL

Dust control shall conform to the provisions in Section 10, "Dust Control," of the 2006 Caltrans Standard Specifications and these Technical Specifications.

Dust control operations shall be performed by Contractor as follows:

a. Designate a person or persons to monitor the dust control program and to order increased watering, as necessary, to prevent transport of dust off site. Their duties shall include holiday and weekend periods when work may not be in progress. The name and telephone number of such persons shall be provided to the APCD prior to commencement of construction.

b. Reduce the amount of disturbed area where possible.

c. Prevent airborne dust from leaving the site.

d. Control dust from dirt and stock pile areas.

e. All trucks hauling dirt, sand, soil or other loose materials are to be covered or should maintain at least two feet of freeboard (minimum vertical distance between top of load and top of trailer) in accordance with California Vehicle Code Section 23114.

f. Ensure that trucks and equipment leaving the site do not carry soil material onto adjacent paved roads; clean adjacent paved roads at the end of each day if visible soil material is carried from the site onto those roads.

The Contractor shall prevent airborne dust from leaving the work site to the fullest extent possible. Any and all stockpiles shall have measures to control dust during construction.

All trucks hauling dirt, sand, soil, or other loose materials are to be covered or should maintain at least two feet of freeboard (minimum vertical distance between top of load and top of trailer) in accordance with California Vehicle Code Section 23114.

Ensure that trucks and equipment leaving the site do not carry soil material onto adjacent paved roads; clean adjacent paved roads at the end of each day if visible soil material is carried from the site onto those streets.

Payment of dust control shall be considered as included in the contract prices paid for the various contract items of work involved and no separate payment will be made therefor.

2.13. SAFETY AND HEALTH PROVISIONS

Safety and Health Provisions will be required for this contract and shall conform to the provisions in Section 7-1.06, "Safety and Health Provisions," of the 2006 Caltrans Standard Specifications.

Attention is directed to "Abandon or Remove Existing Pipelines" of these Technical Specifications regarding procedures used to remove and dispose of asbestos cement pipe.

Removal of existing waterlines can result in potentially negative air quality impacts, especially where material exists containing asbestos material. "Naturally-occurring asbestos" has been identified by the state Air Resources Board as a toxic air contaminant. Serpentine and ultramafic rocks are very common in the state and may contain naturally-occurring asbestos.

If naturally occurring asbestos, serpentine, or ultramafic rock is disturbed at the site during construction activities including grading, excavation, or trenching, the County must comply with all requirements as determined necessary by APCD. The requirements include but are not limited to the following:

1. If naturally-occurring asbestos, serpentine, or ultramafic rock are discovered at the site during construction, the Contractor shall report to the APCD no later than the next business day;

2. The Contractor must comply with the requirements of CCR 93105; and

3. The Exemption under CCR 93105 subsection (c) (1) shall expire and cease to be effective. (For any questions regarding these requirements, contact Karen Brooks (APCD) at 805-781-5912 or go to

http://www.slocleanair.org/business/asbestos.asp).

Payment for compliance with the requirements of the "Safety and Health Provisions," and the forms and fees required by this section shall be considered as included in the contract items of work involved and no separate payment will be made therefor.

2.14. MAINTAINING TRAFFIC

Attention is directed to the provisions of Sections 7-1.08, "Public Convenience," 7-1.09, "Public Safety," and 12, "Construction Area Traffic Control Devices," of the 2006 Caltrans Standard Specifications and these Technical Specifications.

"SUPPLEMENTAL WORK (FLAGGING AND SUPPLEMENTAL TRAFFIC CONTROL)" is a lump sum bid item that provides an allowance as part of the Contract Price for payment for the County's share of cost for flagging or additional flagging directed by the Engineer, in accordance with the provisions of this section, as directed or approved by the Engineer.

Public traffic shall be permitted to pass through construction at all times. During the times when men or equipment are actually working within the public roadway, a minimum of one 10-foot wide lane shall be provided for public traffic. At all other times a minimum of two 10-foot wide lanes reasonably smooth and satisfactory for the use of public traffic shall be provided and maintained irrespective of the state of construction. Adequate sight distance for vehicles exiting driveways shall be maintained. In addition, the Contractor shall backfill the excavated shoulder trench to match the edge of pavement on a 4:1 slope. The material shall be compacted in order to provide a temporary shoulder.

The Contractor shall conduct his/her operations in such a manner that access of abutting property owners along the county road is not obstructed. Care will be taken by the Contractor that materials, pared equipment or open trench within the county road right-of-way will not block driveways or other access means used by the adjacent property owners.

To accommodate excavation work, steel plate bridging may be necessary. Excavated areas within the roadway shall be covered with steel plate bridging or shall be backfilled and temporary patched at the end of each work day and prior to opening for traffic.

TEMPORARY PAVEMENT PATCHING: The temporary patching shall be kept in a smooth, firm, dust-free condition for the safe use of the public until the final surface patching is completed. Patch material shall be cold mix asphalt at least 3-inches think. The temporary cold mix asphaltic concrete shall be cut out and replaced at a later date with permanent hot mix asphalt concrete pavement.

STEEL PLATE BRIDGING: When backfilling operations of an excavation in the traveled way, whether transverse or longitudinal, cannot be properly completed within a work day, steel plate bridging with a non-skid surface and shoring (see

Trenching & Shoring) shall be required to preserve unobstructed traffic flow. In such cases, the following conditions shall apply:

a. Steel plates used for bridging must extend a minimum of 12” beyond the edges of the trench.

b. Steel plate bridging shall be installed to operate with minimum noise.

c. The trench shall be adequately shored to support the bridging and traffic loads.

d. Temporary paving with cold mix asphalt concrete shall be used to feather the edges of the plates at the end of each day prior to permitting traffic to drive over the plated trenches.

e. Bridging shall be secured against displacement by using adjustable cleats, shims, or other devices.

f. Approach plate(s) and ending plate (if longitudinal placement) shall be attached to the roadway by a minimum of 2 dowels pre-drilled into the corners of the plane and drilled 2” into the pavement. Subsequent plates are butted to each other. Fine graded asphalt concrete shall be compacted to form ramps, maximum slope 8.5% with a minimum 12” taper to cover all edges of the steel plates. When steel plates are removed, the dowel holes in the pavement shall be backfilled with either graded fines of asphalt concrete mix, concrete slurry or equivalent slurry that is satisfactory to the Caltrans’ representative.

g. The Contractor shall maintain the steel plates, shoring, asphalt concrete ramps, and ensure that they meet minimum specifications.

h. Unless specifically noted in the Special Provisions, or approved by the Engineer, use of steel plate bridging shall not exceed 4 consecutive working days in any given week.

The following table shows the required minimal thickness of steel plate bridging required for a given trench width (A-36 grade steel, designed for HS20-44 truck loading per Caltrans Bridge Design Specifications Manual).

Trench Width	Minimum Steel Plate Thickness (inches)
10”	½
1’-11”	¾
2’-7”	7/8
3’-5”	1
5’-3”	1-1/4

Note: For spans greater than 5’-3”, a structural design by a registered civil engineer shall be prepared and submitted to the Engineer for review and approval.

All steel plates within the right of way whether used in or out of the traveled way shall be without deformation. Inspectors can determine the trueness of steel plates by using a straight edge and should reject any plate that is permanently deformed.

All steel plates used in the traveled portion of the highway shall have a surface that was manufactured with a nominal coefficient of friction (COF) of 0.35 as determined by California Test Method 342.

A Rough Road sign (W8-8) with black lettering on an orange background may be used in advance of steel plate bridging. This sign is used along with any other required construction signing.

Payment for furnishing labor, materials, tools, equipment, and incidentals, and for doing the work involved in Maintaining Traffic as specified herein shall be considered as included in the contract unit price paid for the various contract items of work involved and no separate payment will be made therefor.

2.15. TRAFFIC CONTROL SYSTEM

A traffic control system shall consist of closing traffic lanes in accordance with the details shown in Standard Plan T13 and to the provisions in Section 12, "Construction Area Traffic Control Devices," of the 2006 Caltrans Standard Specifications.

The provisions in this section will not relieve the Contractor from the responsibility to provide such additional devices or take such measures as may be necessary to comply with the provisions in Section 7-1.09, "Public Safety," of the 2006 Caltrans Standard Specifications.

One-way traffic shall be controlled through the project in accordance with the Standard Plan titled, "Traffic Control System for Lane Closure of Two Lane Conventional Highway," and these Technical Specifications. The Contractor shall utilize flaggers for one-way traffic.

If any component in traffic control system is damaged, displaced, or ceases to operate or function as specified, from any cause during the progress of work, the Contractor shall immediately repair said component to its original condition, or replace said component, and shall restore the component to its original location.

When lane closures are made for work periods only, all components of the traffic control system, except portable delineators placed along open trenches or excavations adjacent to the traveled way, shall be removed from the traveled way, shoulder and auxiliary lanes at the end of each work period. If the Contractor so elects, the components of the traffic control system may be stored at selected central locations, approved by the Engineer, within the limits of the highway right of way.

Upon completion of the work requiring lane closure, all components of the traffic control system shall be removed from the site of work by the Contractor.

The contract lump sum price paid for, "TRAFFIC CONTROL SYSTEM," shall include full compensation for furnishing all labor, (except for flagging costs for the lane closures on two-lane highways), materials (including signs), tools equipment and incidentals, and for doing all the work involved in placing, removing, storing, maintaining, moving to new locations, replacing, and the disposing of the components of the traffic control system as shown on the plans or as specified in the 2006 Caltrans Standard Specifications and these Technical Specifications and no additional compensation will be allowed therefor.

Flagging costs for lane closures on two-lane highways will be paid for as provided in Section 12-2.02, "Flagging Costs," of the 2006 Caltrans Standard Specifications. Supplemental traffic control ordered by the Engineer in accordance with Section 7-1.09, "Public Convenience," of the 2006 Caltrans Standard Specifications will be paid for as provided in Section 4-1.03D "Extra Work," of the Standard Specifications. Costs for the County's portion of Flagging in accordance with Section 7-1.09, "Public Safety," and supplemental traffic control ordered by the Engineer in accordance with Section 7-1.08, "Public Convenience," of the Standard Specifications will be paid for under "SUPPLEMENTAL WORK (FLAGGING AND SUPPLEMENTAL TRAFFIC CONTROL)."

Full compensation for furnishing and operating a pilot car (including driver, radio communications and any other equipment and labor required) shall be considered as included in the contract lump sum price paid for, "TRAFFIC CONTROL SYSTEM," and no additional compensation will be allowed therefor.

The adjustment provisions in Section 4-1.03, "Changes," of the 2006 Caltrans Standard Specifications shall not apply to the item of, "TRAFFIC CONTROL SYSTEM," or the supplemental work item for flagging and supplemental traffic control. Adjustments in compensation for, "TRAFFIC CONTROL SYSTEM" will be made only for increased or decreased traffic control system components required by changes ordered by the Engineer and will be made on the basis of the cost of the increased or decreased component necessary. Such adjustment will be made on a force account basis as provided in Section 9-1.03, "Force Account Payment," of the 2006 Caltrans Standard Specifications for increased work, and estimated on the same basis in the case of decreased work.

Any traffic control system that is required by work which is classed as extra work, as provided in Section 4-1.03D, "Extra Work," of the 2006 Caltrans Standard Specifications, will be paid for as part of the supplemental work item for flagging and supplemental traffic control.

2.16. CONSTRUCTION AREA SIGNS

The Contractor shall furnish all sign panels, posts and hardware. The Contractor shall also erect and maintain all construction area signs shown on the Plans and/or as provided in these Technical Specifications. The Contractor is responsible for having any underground utilities marked where sign posts will be placed. Construction area signs shall not be used until they are needed and when no longer need, they shall be removed from the site of the work by the Contractor.

The base material of construction area signs shall not be plywood. Used sign panels, in good repair as determined by the Engineer, may be furnished. If determined by the Engineer, signs damaged by any cause shall be repaired or replaced by the Contractor at the Contractor's own expense.

In addition, the Contractor shall provide a Project Sign per USDA Rural Development specifications. Compensation for the Project Sign shall included in payment for Construction Area Signs. The Project Sign's specifications can be obtained at www.usda.gov/rus/water/ees/englib/contract.htm. The Contractor shall place the Project Sign at a location designated by the Engineer. This sign, measuring 4' x 8', will be made of ¾" exterior grade plywood and adhere to the format and details given on the website. If the Project Sign is to be combined with any other required project sign, then USDA approval must be obtained through the Engineer. A professional sign painter shall prepare the sign.

"CONSTRUCTION AREA SIGNS" will be paid for on a lump sum basis in the manner specified in Section 12-4.01 of the 2006 Caltrans Standard Specifications.

2.17. TRENCH SAFETY

Attention is directed to Section 6705 of the Labor Code concerning excavation safety plans, Section 7-1.01E, "Trench Safety" of the 2006 Caltrans Standard Specifications and these Technical Specifications.

Contractor shall submit a detailed plan in advance of any trench excavation work as part of this contract showing the design of sheeting, shoring, bracing, sloping or other provisions for workers protection from the potential hazard of caving ground resulting from excavation of any trench or trenches over five (5) feet in depth. The detailed plan must be prepared by a registered civil engineer or structural engineer if the design varies from the shoring system standards required by the Construction Safety Orders.

Trench walls shall be vertical unless permitted otherwise by the Engineer in writing. Adequate shoring, as required by the Division of Occupational Safety and Health of the State Department of Industrial Relations (CAL/OSHA), to protect personnel, limit the trench width to the amount specified herein. If any damage does result from such improvements, the Contractor at its own expense shall make the necessary repairs or reconstruction required as directed by the Engineer.

The sheeting, shoring, and bracing shall be so arranged as not to place any stress on portions of the completed work until the general construction thereof has proceeded far enough to provide ample strength. Any damage occurring through settlements, water or earth pressures, slides, caves or other causes due to failure or lack of sheeting or bracing or improper bracing, or through negligence or fault of the Contractor in any other manner shall be repaired by the Contractor at its own expense.

Care shall be exercised in the drawing or removing of sheeting, shoring, bracing and timbering to prevent the caving or collapsing of the excavation faces which are being supported.

No trenches will be allowed to be open during non-working hours. All trenches shall be backfilled to within 6" of the finish grade or steel plating provided during non-working hours.

The lump sum price paid for "SHEETING, SHORING, AND BRACING" shall include full compensation for furnishing all labor, materials, tools, equipment, and incidentals involved in planning, designing, and providing sheeting, shoring, and bracing in connection with the Work, including but not limited to that required by Section 6700-6708 of the California Labor Code, as specified in the 2006 Caltrans Standard Specifications and these Technical Specifications, and as directed by the Engineer.

2.18. PRESERVATION OF PROPERTY

Attention is directed to Sections 7-1.11 "Preservation of Property," 7-1.12 "Indemnification and Insurance," and Section 8-1.10 "Utility and Non-Highway Facilities" of the 2006 Caltrans Standard Specifications. Existing roadway, public utility and/or water system improvements and facilities, adjacent property, landscaping improvements, trees and plants that are not designated on the Drawings to be removed, shall be fully protected from damage and/or restored in like kind as directed by the Engineer, at the Contractor's expense. During construction activities, to avoid attracting predators, trash shall be properly contained, removed from the work site, and disposed of regularly. In addition, any damage to County property caused by the Contractor's operations shall be repaired or replaced in kind by the Contractor at the Contractor's expense.

Payment for preservation of property shall be considered as included in the contract prices paid for the various contract items of work involved and no separate payment will be made therefor.

2.19. OBSTRUCTIONS

Attention is directed to Section 8-1.10, "Utility and Non-Highway Facilities," and Section 15, "Existing Highway Facilities," of the 2006 Caltrans Standard Specifications.

The following utility companies are known to have existing facilities and/or services within the project limits:

COMPANY	CONTACT	PHONE NUMBER
AT&T	Ralph Soares	805-546-7315
PG&E	Bob Burke	805-546-5236
So. Cal Gas	Vagn Pedersen	805-681-8048
Charter Comm.	Fenton Moody	805-544-1962
Cayucos Sanitary District	Jon Collins	805-835-3290
CSA 10A	Mark Chiaramonte	805-835-1597

Attention is directed to "Order of Work" of these Technical Specifications regarding the Contractor responsibility to ensure continuous positive or negative grade for the new waterline.

The Contractor shall perform pothole/exploratory excavations along the alignment of the new water pipeline to determine if any utility obstructions will prevent a minimum clearance between the pipeline and the existing substructure.

Utility separation criteria for new water main constructed parallel or crossing underground sewer, storm drain, or hazardous fluids such as fuel facilities shall conform to County Standard Drawing Nos. U-3 and U-3b, unless otherwise shown on the plans. Utility separation criteria for new water main crossing all other types of underground facilities (including sanitary sewer, stormdrain, communication cables, gas, electric, etc.) shall have a minimum clearance of 12", unless otherwise shown on the plans, or unless approved by the Engineer. If these distances cannot be achieved, the Contractor shall notify the Engineer prior to construction.

The maximum horizontal angle for new water main crossing utility such as sewer, storm drain, or hazardous fluids such as fuels, shall be 45 degrees and at least one foot above that pipeline unless otherwise shown on the plans.

The Contractor must contact Underground Service Alert (USA) at 800-227-2600 a minimum of 48 hours prior to the start of construction. For best response, provide as much notice as possible, up to 10 working days.

Payment for furnishing labor, materials, tools, equipment, and incidentals, and for doing the work involved in locating, protecting, or repairing property as specified herein shall be considered as included in the contract unit price paid for the various contract items of work involved and no separate payment will be made therefor.

2.20. EXISTING HIGHWAY FACILITIES

The work performed in connection with various existing highway facilities shall conform to the provisions in Section 15, "Existing Highway Facilities," of the 2006 Caltrans Standard Specifications and these Technical Specifications.

2.21. EXISTING WATER DISTRIBUTION SYSTEM

In the event that the new waterline is not in service within the time specified in "Order of Work" of these Technical Specifications, the Contractor shall restore service using temporary means approved by the Engineer as soon as possible until such time that the new waterline can be connected. The contractor shall not operate a gate valve or any waterworks appurtenances.

2.22. ISOLATION OF EXISTING SYSTEM

Contractor shall provide all additional valving, blind flanges, and thrust blocks as necessary to isolate lines that have been tied into the existing system but are not yet completed or ready to operate in their intended function.

If at any time, the system pressure drops to less than five (5) psi, bacteriological samples shall be collected from water representative of the water quality in the affected portions of the system before being connected to the existing distribution system.

Full compensation for additional valving, blind flanges, and thrust blocks as needed to isolate any portion of the existing waterline to perform the work as shown on the plans shall be considered as included in the contract prices paid for the various contract items of work involved and no separate payment will be made therefor.

2.23. CLEARING AND GRUBBING

Clearing and grubbing shall conform to the provisions in Section 16, "Clearing and Grubbing," of the 2006 Caltrans Standard Specifications.

All existing vegetation, outside the areas to be cleared and grubbed, shall be protected from injury or damage resulting from the Contractor's activities.

Any trees and/or branches to be removed necessary for construction shall be verified by the Contractor in coordination with the Engineer prior to removal.

Full compensation for removing and disposing all vegetation, including trees and/or stumps, which will be affected by the construction activities, and in accordance with the 2006 Caltrans Standard Specifications, shall be considered as included in the contract price paid for the various items of work involved and no separate payment will be made therefor.

2.24. REMOVE ASPHALT CONCRETE PAVEMENT

The existing asphalt concrete surfacing and/or dikes to be removed shall be saw cut along the centerline of the waterline improvements in accordance with Drawings R-3 and R-3a of the 2011 San Luis Obispo County Public Improvement Standards. The existing surfacing within the trench cut shall be broken up and removed. Trench repair shall include a 12" minimum T-section as shown on Drawings R-3 and R-3a. The saw cut shall be a neat vertical cut no less than 0.2-feet in depth. Care is to be taken to protect the surfacing that is to remain in place.

The asphalt concrete material removed shall be considered as excess material and disposed of in accordance with the provisions in Section 7-1.13, "Disposal of Material Outside the Highway Right of Way," of the 2006 Caltrans Standard Specifications.

Full compensation for "Remove Asphalt Concrete Pavement" shall be considered as included in the contract prices paid for the various contract items of work involved and no separate payment will be made therefor.

2.25. RECONSTRUCT CONCRETE CURB, GUTTER, AND SIDEWALK

Cut bituminous and concrete pavements regardless of the thickness of curbs and sidewalks prior to excavation of the trenches with a pavement saw or pavement

cutter. Width of the pavement cut shall conform to the trench construction details shown on the Drawings, and shall be at least equal to the required width of the trench at ground surface.

Pavement and concrete materials removed shall be considered as excess material and disposed of in accordance with the provisions in Section 7-1.13, "Disposal of Material Outside the Highway Right of Way," of the 2006 Caltrans Standard Specifications. Do not use said materials for trench backfill.

Concrete removed shall be repaired the full depth of the existing concrete pavement per Section 73, "Concrete Curbs and Sidewalks," of the 2006 Caltrans Standard Specifications. Install new dowel bars between existing dowel bars equally spaced. Concrete shall conform to "Minor Concrete" of these Technical Specifications.

Full compensation for removing and reconstruction of concrete curb, gutter, and sidewalk, including disposal, reinforcing steel, formwork, tie wire, joints, aggregate, and for other work involved in conforming to these Technical Specifications and 2006 Caltrans Standard Specifications, shall be considered as included in the contract items of work involved and no separate payment will be made therefor.

2.26. REMOVE GATE VALVE

Gate valve removal shall conform to the detail shown on Sheet D-2 of the Drawings. Sawcut existing pipe, remove and dispose of gate valve, valve box assembly, concrete collar, including anchor block and pipe at locations shown on the Drawings. Sawcut and remove existing AC pavement as described in "Remove Asphalt Concrete Pavement" of these Technical Specifications. The pavement shall be restored as shown on the Drawings and as specified in "Hot Mix Asphalt Concrete Pavement" per these Technical Specifications. Resulting openings of existing pipelines that are to remain in place shall be plugged with concrete conforming to the provisions in "Minor Concrete" of these Technical Specifications.

Full compensation for removing gate valves including furnishing all labor, materials, tools, equipment, and incidentals and for doing all the work involved in removing the gate valve, box assembly, concrete collar, anchor block, disposal, plugging openings of existing pipelines, backfill and pavement restoration at locations as shown on the Drawings, as specified in the 2006 Caltrans Standard Specifications and these Technical Specifications, shall be considered as included in the contract items of work involved and no separate payment will be made therefor.

2.27. ABANDON OR REMOVE EXISTING PIPELINES

Contractor shall abandon and/or remove sections of existing waterline at the locations shown on the Drawings and as necessary to access and install the new waterline and related facilities.

Existing utility pipelines, where shown on the plans to be abandoned, shall be abandoned in place or, at the option of the Contractor, the pipelines shall be removed and disposed of. Resulting openings into existing structures that are to remain in

place shall be plugged with concrete conforming to the provisions in "Minor Concrete" of these Technical Specifications.

Asbestos Cement Pipe. The Contractor shall obtain proper certification and training through CAL/OSHA to remove and dispose of asbestos cement pipe. The Contractor shall submit the procedure used to remove and dispose of asbestos cement pipe ten (10) working days prior to the beginning of the asbestos removal activity or demolition. Provide name, address, and phone number of properly-permitted land fill that is to be used for disposal of asbestos waste and debris. Such landfill must be operated in compliance with all applicable federal, state, and local legal requirements. Non-friable asbestos-containing material that has or will become friable, crumbled, pulverized, or reduced to powder by the forces expected to act on the material during the course of construction shall conform to CAL/OSHA, Section1529 regulations.

Full compensation for abandoning or removing existing pipelines shall be considered as included in the contract prices paid for the various contract items of work involved and no separate payment will be made therefor.

2.28. SEWER LATERAL RECONSTRUCTION

As indicated in "Order of Work" and "Obstructions" of these Technical Specifications, it is intended that the new watermain will be constructed at a constant positive or negative grade, with proposed high and low points and corresponding air/vac and blow-off assemblies in the locations shown on the Drawings, and that the Contractor will be required to pothole existing utilities in advance of construction. While it is not anticipated that existing sanitary facilities will need to be relocated, a bid item has been included for reconstruction of existing sewer laterals that may be required to facilitate watermain construction, as directed by the Engineer.

Reconstruction of existing sewer laterals shall conform to Cases A-E as shown on Standard Plan 223-1 included in the Standard Plans section of these Contract Documents, as directed by the Engineer. Unless otherwise directed by the Engineer, sewer laterals shall be constructed with SDR 35 pipe of the same nominal diameter as the existing lateral. Existing pipe and fittings shall be sawcut, removed and disposed of, as directed by the Engineer. Connections may be made with properly sized fittings or transition couplings, as approved by the Engineer. Construction details not shown on Standard Plan 223-1 shall conform to the 2011 San Luis Obispo County Public Improvements Standards, as directed by the Engineer. The Contractor shall provide the Engineer with a submittal showing proposed construction and materials for review and approval prior to construction. The Contractor shall coordinate with the Cayucos Sanitary District for their review, approval and to coordinate any inspections they may require during construction. Contractor shall abandon and/or remove sections of existing waterline at the locations shown on the Drawings and as necessary to access and install the new waterline and related facilities. The Contractor shall coordinate with affected property owners and provide a minimum of 48 hours' notice prior to taking the lateral out of service. Unless otherwise approved by the Engineer, sewer service shall not be interrupted for more than four (4) hours.

The contract price paid per each "SEWER LATERAL RECONSTRUCTION" shall include full compensation for furnishing all labor, materials, tools, equipment, and incidentals and for doing all the work involved in reconstructing existing sewer laterals as directed by the Engineer, including planning, preparing submittals, coordinating review and approvals, coordinating with affected property owners, saw cutting, excavation, trenching, removal of water, removal and disposal of existing pipe and fittings as required, bedding and backfill, slurry cement backfill, compaction, tracer wire, detection tape, pavement and/or surface restoration, landscaping, vegetation and/or irrigation restoration, and all appurtenant work and materials as shown on Standard Plan 223-1, the 2011 San Luis Obispo County Public Improvements Standards, and as directed by the Engineer, and no additional compensation will be allowed therefor.

2.29. EARTHWORK

Earthwork shall conform to the provisions in Section 19, "Earthwork," of the 2006 Caltrans Standard Specifications and these Technical Specifications. This section describes excavations, trenching, bedding and backfilling, and testing for compaction for the construction of the potable water pipelines, and other items as shown in the plans.

EXCAVATION AND TRENCHING

The trench shall be excavated to 6 inches below the bottom of the pipe. The excavations for valves and fittings shall be performed by hand and the bedding material shall be hand-shaped so that the bottom segment of the pipe is firmly supported. It is the intention of these requirements to provide firm, uniform bearing for the pipe.

Limit the length of open trench in advance of the pipeline to the length of pipe that can be installed in one working day. All in-place pipeline segments shall be capped daily until buried to prevent the entry of animals or foreign materials.

If soft, spongy, unstable, or similar other material is encountered upon which the bedding material or pipe is to be placed, this unsuitable material shall be removed to a depth ordered by the Engineer and replaced with sand bedding material suitably densified, in accordance with Section 19-2.02 "Unsuitable Material" of the 2006 Caltrans Standard Specifications. Additional excavation and bedding so ordered, over the above amount required by the Drawings or specifications, will be paid for as provided in Section 4-1.03D, "Extra Work" of the 2006 Caltrans Standard Specifications.

The surplus excavated material shall be disposed of by the Contractor outside the highway right of way in accordance with the provisions in Section 7-1.13, "Disposal of Material Outside the Highway Right of Way," of the 2006 Caltrans Standard Specifications.

Payment for excavation shall be considered as included in the contract items of work involved and no separate payment will be made therefor.

BRACING EXCAVATION

The Contractor's attention is directed to "Trench Safety" of these Technical Specifications. Adequate shoring, as required by the Division of Occupational Safety and Health of the State Department of Industrial Relations (CAL/OSHA), to protect personnel, adjacent property and roadway area shall be installed through unstable material to limit the trench width to the amount specified herein. If any damage does result from such improvements, the Contractor at his/her own expense shall make the necessary repairs or reconstruction required and as directed by the Engineer.

The sheeting, shoring and bracing shall be so arranged as not to place any stress on portions of the completed work until the general construction thereof has proceeded far enough to provide ample strength. Any damage to structures occurring through settlements, water or earth pressures, slides, caves or other causes due to failure or lack of sheeting or bracing or improper bracing, or through negligence or fault of the Contractor in any other manner shall be repaired by the Contractor at his/her own expense.

Care shall be exercised in the drawing or removing of sheeting, shoring, bracing and timbering to prevent the caving or collapsing of the excavation faces which are being supported.

STEEL PLATING TRENCHES

The Contractor's attention is directed to "Maintaining Traffic" of these Technical Specifications regarding steel plating. No trenches will be allowed to be open during non-work hours. All trenches and other excavated areas within the roadway shall be covered with steel plate bridging or shall be backfilled and temporarily patched with cold mix at the end of each work day and prior to opening for traffic.

Payment for steel plating trenches shall be considered as included in the contract items of involved and no separate payment will be made therefor.

SAND BEDDING AND MATERIAL PLACEMENT

Bedding and structural backfill shall be compacted in accordance with San Luis Obispo County Standard Dwg. No. U-4 and U-4a. Bedding material shall be sand passing a No. 4 sieve with not more than 15% passing a No. 200 sieve, be non-plastic with a minimum sand equivalent of 20, and be approved by the Engineer. Imported sand bedding shall be used for the full length of the new pipeline. Structural backfill material gradation shall be as shown in Drawing U-4.

After the pipe has been bedded on the sand bedding material, bedding of the same material shall be placed on the sides and to a minimum of twelve (12) inches above the pipe. The bedding material shall be filled to the top of the pipe and then compacted around the pipe prior to placing the next layer of material. Water consolidation by flooding or jetting will not be permitted except by written permission of the Engineer. Hand tamping may be supplemented by the use of vibratory or other compaction equipment, provided that the equipment used is

approved by the Engineer and does not strike, move or damage the pipe or other improvements while in the process of compacting.

SUBSEQUENT BACKFILLING

The minimum cover over the pipe shall be thirty-six (36) inches unless approved otherwise by the Engineer. Shallow trench construction, if approved by the Engineer, shall conform to the 2011 San Luis Obispo County Public Improvement Standards, Drawing U-4b . All trenches shall be backfilled for the full width of the trench, including joints, after pipe, fittings, appurtenances and bedding material have been installed, and before the required pressure and leakage tests are performed.

Subject to the provisions specified herein, the material obtained from project excavations may be used as backfill, provided that all organic material, rubbish, debris, and other objectionable material are first removed. However, broken Portland cement concrete and bituminous type pavement obtained from the project excavations will be permitted in the backfill, subject to the same limitations as rocks.

Rocks, broken Portland cement concrete and bituminous type pavement greater than 4" in any dimension obtained from project excavations shall not be included in any backfill, and shall be considered "unsuitable material" and disposed of off the project site. Rocks greater than 2 inches in any dimension will not be permitted in backfill placed within 1 foot above the top of any pipe or 1 foot below pavement subgrade. Where rocks are included in the backfill, they shall be mixed with suitable excavated materials so as to eliminate voids.

Compaction requirements shall conform to the "Compaction Testing" specifications described below. After the placing of backfill has been started, the Contractor shall proceed as soon as practicable with densification.

Payment for bedding and backfilling, including sawcutting, excavation, sand bedding and subsequent backfill, and removal and disposal of unsuitable material, shall be considered as in the various contract items of work involved and no separate payment will be made therefor.

COMPACTION TESTING

Compaction testing shall be performed in accordance with the County of San Luis Obispo Standard Drawing No. U-4 and U-4a as of the Engineer. The County will pay for the initial cost of all compaction tests. If the backfill compaction fails to meet the relative density requirements set forth herein, the Contractor shall pay for subsequent compaction tests at the rate of $25.00 per individual test. The Contractor shall make all necessary excavations for compaction tests, as directed by the Engineer, and shall refill and recompact these excavations to the densities specified herein.

RESTORATION OF VEGETATION, LANDSCAPING, IRRIGATION AND RESIDENCE'S DRIVEWAYS

Existing landscape, grass, plants, shrubs, flowers, fences, pavers, gravel, irrigation systems and other landscape features that are disturbed, obliterated, cut, removed, damaged or harmed shall be replaced with like kind material by the Contractor, and as directed by the Engineer.

Existing residence's driveways disturbed, removed or damaged shall be replaced in like kind by the Contractor, and as directed by the Engineer.

Payment for restoration of vegetation, landscaping, irrigation, and residence's driveways, shall be considered as included in the contract items of work involved and no separate payment shall be made therefor.

REMOVAL OF WATER

Removal of water consists of discharging accumulated storm water, ground water, or surface water from excavations or temporary containment facilities. Removal of water shall conform to the provisions in Section 19-3.04, "Water Control and Foundation Treatment," of the 2006 Caltrans Standard Specifications. Before removal of water, the Contractor shall submit a Dewatering and Discharge Plan to the Engineer in conformance with these Technical Specifications.

All excavations shall be kept free of water while water system pipeline repair or construction activities are being performed. All water accumulating in excavations from any source whatsoever shall be removed by the Contractor at his own expense. The Contractor shall at all times have adequate pumping machinery available and ready for immediate use. Waste water shall be disposed of in such a manner as will not cause any damage to public or private property and will not be a menace or inconvenience to the public. No concrete footings, foundations, anchors, or thrust blocks shall be laid in water, nor shall water be allowed to rise over them until the concrete has set at least 12 hours.

Flushing heavily chlorinated water from the water main or any discharge created from dechlorination, flushing, pumping or dewatering shall be in accordance with these Technical Specifications, "Disinfection, Flushing, Bacteriological Testing, Connection to Distribution, and Documentation" included herein.

Payment for preparation and implementation of dewatering activities shall be considered as included in the various contract items of work and no separate payment will be made therefor.

2.30. PLASTIC WATERMAIN PIPE

Materials

Except as noted on the Drawings or otherwise specified in this section, all plastic watermain pipe shall be PVC pipe in accordance with the requirements of AWWA Standard C900, DR 14 for use in water supply and distribution systems. Each length of pipe shall be furnished with a molded bell on the end of the pipe, suitable for connecting lengths of pipe and meeting all the requirements for the pipe on which it is to be used. Gaskets and lube shall conform to ASTM Standard F477. AWWA

Standard C111. The PVC pipe shall be Johns-Manville Blue Ring-Tite PVC Pressure Pipe, PW Pipe PVC Water Pipe, or approved equal.

In order to comply with California Department of Public Health water main separation requirements, the new water pipe crossing under the existing 24" diameter culverts on Shearer Avenue near Station 21+30 shall be required to have special construction. The Contractor shall construct the water main at this location using HDPE pipe with fusion-welded joints, per AWWA C906-99. The pipe shall have a minimum pressure class of 200 psi and shall have no joints within ten feet from the outside wall of either culvert. Unless approved otherwise by the Engineer, sections of polyethylene pipe shall be joined into continuous lengths on the job site above ground. The joining method shall be the butt fusion method and shall be performed in strict accordance with the pipe manufacturer's recommendations. The butt fusion equipment used in the joining procedures shall be capable of meeting all conditions recommended by the pipe manufacturer. Butt fusion joining shall result in joint weld strength equal to or greater than the tensile strength of the pipe. Transition couplings shall be used to transition between the fusion welded HDPE pipe and C900 DR 14 PVC pipe, in accordance with "Transition Couplings" of these Technical Specifications.

Receiving, Storing, Handling and Installation

The PVC pipe shall be received, stored, handled and installed in accordance with AWWA Manual M23, "PVC Pipe Design and Installation."

The PVC pipe shall at all times be handled with care to avoid damage. Whether moved by hand, skidways, or hoists, the material shall not be dropped or bumped. The interior and machined ends of all pipe and fittings shall be kept free from dirt and foreign matter at all times. Pipe or fittings which have been damaged at the machined ends, or at such other points that cannot be repaired to the Engineer's satisfaction, shall be replaced at the Contractor's expense.

The machined ends of pipe to be jointed, the coupling grooves, and rubber rings shall be cleaned immediately before assembly. Each pipe joint shall be sealed with a coupling consisting of a PVC sleeve and two rubber rings or molded bell with rubber rings. The location of field assembled rings shall be checked with a suitable gage to verify that the rubber rings are in the required position.

Pipe shall be laid directly on the bottom the trench containing bell holes shaped to provide continuous contact with the pipe between bell holes. Before the pipe is lowered into the trench, a bell hole shall be dug with sufficient length, width, and depth to permit accessibility and provide a minimum clearance of 2 inches between bell and the trench bottom.

Pipe shall not be defected either vertically or horizontally more than the limits recommended by the manufacturer.

When pipe laying is not in progress, the open ends of the installed pipe shall be temporarily closed by a means approved by the Engineer to prevent entrance of trench water or other foreign material into the line. Whenever water is present in the

trench, enough backfill shall be placed on the pipe to prevent floating. Any pipe that has floated shall be removed from the trench and relaid as directed by the Engineer. No pipe shall be laid in wet trench conditions that preclude proper bedding, or when, in the opinion of the Engineer, the trench conditions or the weather are unsuitable for proper installation.

Unless shown otherwise on the plans or as directed by the Engineer, cover shall be a minimum of 36 inches and such additional depth as necessary to connect to existing pipelines and avoid existing utilities.

At minor changes in alignment or grade where the pipe can not be deflected, the Contractor shall install a coupling that allows for minor deflections in accordance with the pipe manufacturer's recommendations. If the manufacturer's recommended coupling cannot provide adequate deflection, the Contractor shall install a ductile iron fitting to allow for the changes in alignment or grade.

Measurement shall be made along the centerline of pipe in the horizontal plane from the center of fitting to the center of fitting. Deductions are not made for fittings and valves. The County will not release retention until the pipeline has passed pressure testing and bacteriological testing.

The contract unit price paid per linear foot for "8" C900 DR 14 PIPE" shall include full compensation for furnishing all labor, materials, tools, equipment, and incidentals such as providing temporary water supply, and for doing all the work involved in the installation of PVC pipe sizes complete in place including flanges, mechanical joint fittings, transition couplings, isolation of dissimilar materials to prevent corrosion, reducers, tees, crosses, bends, caps, thrust blocks and thrust restraints, concrete plugs, tracer wire, detection tape, pothole/exploratory excavations, sawcutting, excavation, trenching, bedding and backfilling, compaction, removal of water, disposing of excess or unsuitable excavated material, pressure testing, flushing, disinfection and bacteriological testing, pavement and/or surface restoration, and all appurtenant work and materials, as shown on the Plans, the 2006 Caltrans Standard Specifications and these Technical Specifications, and as directed by the Engineer, and no additional compensation will be allowed therefor.

The contract unit price paid per linear foot for "8" HDPE FUSION WELDED PIPE AT LOW POINT - SHEARER AVE. 21+30" shall include full compensation for furnishing all labor, materials, tools, equipment, and incidentals, and for doing all the work involved in the installation of the fusion welded HDPE pipe under the existing culverts at the low point in Shearer Avenue complete in place including fusion welding of the joints, transition couplings, tracer wire, detection tape, pothole/exploratory excavations, sawcutting, excavation, trenching, bedding and backfilling, compaction, removal of water, disposing of excess or unsuitable excavated material, pressure testing, flushing, disinfection and bacteriological testing, pavement and/or surface restoration, and all appurtenant work and materials, as shown on the Plans, the 2006 Caltrans Standard Specifications and these Technical Specifications, and as directed by the Engineer, and no additional compensation will be allowed therefor.

2.31. NON-DETECTABLE WARNING TAPE

Non-detectable warning tape (detection tape) shall be installed over the main waterline pipe, fire hydrant laterals, air/vac and blow-off assemblies, and appurtenant facilities per San Luis Obispo County 2011 Standard Drawing No. U-4 or U-4a. Non-detectable warning tape shall be shall be of stretch-type, be colour-durable, blue in colour, chemically resistant, a minimum of 3" wide, and 4 mils thick.

Payment for the detectable warning tape shall be considered as included in the various contract items of work and no separate payment will be made therefor.

2.38. TRACER WIRE

A 14-guage copper wire shall be firmly attached to the top to the pipe along the entire length of the pipe fire hydrant laterals, air/vac and blow-off assemblies, and appurtenant facilities per San Luis Obispo County 2011 Standard Drawing No. U-4 or U-4a. The tracer wire shall run up into each valve box and terminate. Tracer wire shall be Coleman Cable Model 54492-12, Copperhead Cable Model 1230-HS-2500, or equal.

Payment for the tracer wire shall be considered as included in the various contract items of work and no separate payment will be made therefor.

2.39. DUCTILE IRON FITTINGS

Ductile-iron fittings shall be used for PVC pipe. Fittings shall meet the requirements of AWWA C104, C110, C111, C115, C116, C150, C151, and C153. All fittings shall be rated for 250 psi.

Delivery, storage, and handling of ductile-iron fittings shall be in accordance with AWWA C600.

Plain ends shall conform to the requirement of AWWA C151 and to the dimensions included within AWWA C110 to accept a mechanical joint, flanged coupling adaptor, flexible coupling adaptor, flexible coupling, or grooved coupling. When connecting old pipe to new pipe, appropriate transition coupling adapter fittings shall be used to connect plain end pipes with dissimilar materials.

Submittals

Submit the following data for review and approval:

1. Certification by manufacturer for each item furnished in accordance with the ANSI/AWWA Standards

2. Certification of gaskets, certifying that gasket material is suitable for services intended and are compatible with the joints specified.

3. Dimensions

    a. Dimension of bends, both in horizontal and vertical alignment.

b. Pipe internal diameter, wall thickness, and internal design pressure.

c. Location of valves, flanges, appurtenances and other mechanical equipment.

4. Lining and coating system

Lining and Coating

Ductile-iron fittings shall be cement mortar lined, or epoxy lined if approved in advance by the Engineer. Ductile iron fittings located above ground shall be coated per "Painting" of these Technical Specifications. The primer, intermediate, and finish coat shall be shop-applied. The colour of the coating system shall match existing exposed piping.

Irregular surfaces, any remaining exposed piping, flange, bolts, and nut surfaces, shall be coated with wax tape per "Wax Tape" of these Technical Specifications, prior to placing concrete anchors, collars, supports, or thrust blocks.

The exterior surfaces of buried pipe and fittings shall be factory coated with a minimum one (1) mil thick petroleum asphaltic material per AWWA C110 and C151. For buried fittings, lubricate bolts and nuts with corrosion resistant grease per Section 2.42. "Corrosion Resistant Grease" of these Technical Specifications, and wrap pipe with polyethylene sheet wrap and tape per "Polyethylene Sheet Wrap" of these Technical Specifications. The pipe manufacturer shall supply the polyethylene sheet wrap for the ductile iron pipe that he supplies.

Mechanical Joint

Joints for buried piping shall be mechanical joints per AWWA C110/A21.10, C110/A21.11, and AWWA C153/A21.53-06. Fittings and specials for grooved and shouldered end pipe shall conform to AWWA C606.

Mechanical joints shall be carefully assembled in accordance with the manufacturer's recommendations. If effective sealing is not obtained, the joint shall be disassembled, thoroughly cleaned, and reassembled. Bolts shall be uniformly tightened to the torque values listed in Appendix A ANSI/AWWA C111/A21.11. Over-tightening of bolts to compensate for poor installation practice will no be acceptable. The holes in mechanical joints with tie rods shall be carefully aligned to permit installation of the tie rods. In flange and mechanical joint pieces, holes in the mechanical joint bells and the flanges shall straddle the top (or side for vertical piping) centerline. The top (or side) centerline shall be marked on each flange and mechanical joint piece at the foundry.

Gaskets shall be ASTM D1330, Grade I rubber in accordance with AWWA C111. Gaskets shall be of the full face type, 1/8 inch thick. Natural rubber will not be accepted. Gaskets shall be furnished by the pipe manufacturer.

Restrained Joints

Restrained joints for ductile iron pipe shall be installed at locations shown on the plans. Acceptable joint restraint devices include special joint designs that are standard products of domestic DIP manufacturers. The Contractor shall submit to the Engineer for review and approval information of the type of joint proposed.

Flanges

Joints in aboveground piping shall be flanged unless otherwise shown on the plans. Crosses or tees shall have flanged joints for connecting to flanged gate valves.

Flanges shall be in accordance with AWWA C115/A21.10-03. Flanges shall be flat faced, solid back with ANSI/ASME B16.20.

Bolts and Nuts

Bolts for aboveground service shall conform to ASTM A307, Grade B, chamfered or rounded ends projecting ¼ to ½ inch beyond outer face of nut. Nuts shall conform to ASTM A194, Grade 1, 2, or 2H, hexagonal.

Bolts and nuts for underground service shall be Type 316 stainless steel.

Installation

Before fittings are laid, all lumps, blisters and excess coating shall be removed from the bell. The inside of the bell shall than be wire-brushed and both the inside of the bell and the spigot will be required if necessary to fit the PVC pipe to the hubs of ductile iron fittings. If a joint is defective, it shall be cut out and replaced entirely with new material.

Payment

Full compensation for "Ductile Iron Fittings" shall be considered as included in the contract items of work involved and no separate payment will be made therefor.

2.40. BOLTS AND NUTS

Bolts and nuts for flanges located above ground, or in vaults shall be carbon steel, ASTM A 307, Grade B. Bolts for AWWA C207 Class E or F flanges shall be ASTM A 193, Grade B7, with nuts conforming to ASTM A194, Grade 2H.

Bolts and nuts for buried or submerged flanges shall be Type 316 stainless steel conforming to ASTM A 193, Grade B8M, for bolts and ASTM A 194, Grade 8M, for nuts.

Bolts used in flange insulation kits shall conform to ASTM A 193, Grade B7. Nuts shall conform to ASTM A 194, Grade 2H.

Provide washers for each nut. Washers shall be of the same material as the nuts.

Submit certified copies of mill test reports for bolts and nuts, including coatings if specified.

Full compensation for "Bolts and Nuts" shall be considered as included in the contract items of work involved and no separate payment will be made therefor.

2.41. LUBRICANT FOR BOLTS AND NUTS

Apply to metal bolts, bolt threads, tie rods, and nuts above ground or in vaults. Lubricant shall be chloride free, waterproof, and shall be Ramco Specialty Products Inc. TG-50, Husk-ITT Huskey Lube "O" Seal grease, or approved equal.

Full compensation for "Lubricant for Bolts and Nuts" shall be considered as included in the contract items of work involved and no separate payment will be made therefor.

2.42. CORROSION RESISTANT GREASE

Apply to buried metal, such as bolts, bolt threads, tie rods and nuts. Surface preparation is per SSPC SP-3 or SP-6. Coating shall be NO-OX-ID GG-2 as manufactured red by Sanchem, Inc. or approved equal. Apply to a minimum thickness of ¼ inch.

Full compensation for "Corrosion Resistant Grease" shall be considered as included in the contract items of work involved and no separate payment will be made therefor.

2.43. POLYETHYLENE SHEET WRAP

Polyethylene sheet wrap shall be used to encase and cover all exposed metal surfaces including buried ductile iron pipe, including, odd-shaped appurtenances such as valves, tees, crosses, bends, adapters, couplings, tapping sleeves, and other fittings or specials prior to placing concrete anchors, supports, or thrust blocks in accordance to AWWA C105, Installation Method C. If polyethylene sheet wrap cannot wrap around the object, then use wax tape per "Wax Tape" of these Technical Specifications.

Valves shall be wrapped such that only the stern and operating nut are exposed and the wrap shall be attached so that valve operation will not disturb the wrapping or break the seal.

Apply two layers or wraps around flexible pipe couplings. Overlap the adjoining pipe or fitting a minimum of 12 inches and secure in place with tape. Apply tape around the entire circumference of the overlapped section on the adjoining pipe or fitting.

Repair cuts, tears, punctures, or other damage to the polyethylene per AWWA C105. The polyethylene sheet wrap shall be colour blue and shall be low-density 8-mil film thickness. The polyethylene film supplied shall be marked per AWWA C105-5, Section 4.3.

Tape shall be Calpico Vinyl Tape, Polyken 900, Scotchwrap 50, or approved equal. Tape shall be 2-inch wide. Apply tape in accordance with AWWA C105.

Full compensation for "Polyethylene Sheet Wrap" shall be considered as included in the contract items of work involved and no separate payment will be made therefor.

2.44. WAX TAPE

Wax tape shall be used for coating exposed metal surfaces of ductile iron or steel piping, fittings, mechanical joints, insulating flanges, valves, bolts, nuts, and other irregular surfaces. Wax tape material and application shall be per AWWA C217 and have the following properties:

a. Thickness = 50 to 70 mils

b. Tape width = 6 inches

c. Dietectric strength = 100 volts/mil

d. Wax tape shall be Trenton No. 1 Wax Tape, Denso "Densyl Tape", or approved equal.

Primer shall be applied at a rate of one gallon per 100 square feet. Primer shall be Trenton Wax Tape Primer, Denso Paste Primer, or approved equal. Plastic wrapper shall have a clear colour, thickness of 1.5 mils, and tape width of 6 inches. Plastic wrapper shall be Tranton Poly-Ply, Denso Tape PVC Self-Adhesive, or approved equal.

On vertical sections of ductile iron pipe, such as at underground-to-above ground transitions (ie. fire hydrants), coat ductile iron pipe with wax tape starting from the bottom and proceeding upward so that downward flowing water and backfill do not catch in seam.

Wrap completed wax tape coating system with polyethylene wrap and secure around the adjacent pipe circumference with adhesive tape per Section 2.43. of these Technical Specifications.

Full compensation for "Wax Tape" shall be considered as included in the contract items of work involved and no separate payment will be made therefor.

2.45. PAINTING

Painting shall conform to the Section 59, "Painting," of the 2006 Caltrans Standard Specifications and these Technical Specifications. This section includes materials and application of painting for the following surfaces:

1. Exposed metal – Ductile Iron exposed to atmospheric weathering

2. Valves, Couplings, Tapping Sleeves, Expansion Joints

3. Fire hydrants, air and vacuum relief valve enclosures, bollards.

All coating products shall be received and stored in accordance with the coating manufacturer's recommendations. All iron surfaces of piping and equipment shall be protected with suitable protective coatings applied in the shop.

Repair Coatings: Abraded and scarred areas and connections on painted surfaces exposed to view shall be repaired with the same kind of paint and with a minimum dry film thickness equal to that previously applied to the steel. Contractor shall be responsible for ensuring the compatibility of field coatings with each other or with the coatings on shop coated or previously coated surfaces.

Polyethylene sheet wrap shall be used to encase and cover all metal surfaces including buried ductile iron pipe, bends, adapters, fittings, couplings, tapping sleeves and all valves per Section 2.43 of these Technical Specifications.

Exposed metal – Ductile Iron exposed to atmospheric weathering

Surface Preparation: Abrasive Blast approximating SSPC-SP6 Commercial Blast Clean and in accordance with NAPF 550-03, Surface Preparation Standard for Ductile Iron Pipe and Fittings Receiving Special External Coatings.

A. Primer: Epoxy primer applied at spreading rate and thickness recommended by manufacturer. Tnemec Series V69 Epoxoline, Carbomastic 15 Aluminum, or approved equal.

B. Intermediate Coat: Epoxy intermediate coat applied at spreading rate and thickness recommended by manufacturer. Tnemec Series V69 Epoxoline, Carbomastic 15 Aluminum, or approved equal.

C. Topcoat: Urethane applied at spreading rate and thickness recommended by manufacturer Tnemec Series 1075 Endura-Shield, Carboline Carbothane 134VOC, or approved equal. Colour shall be dark, muted green.

Valves, Couplings, Tapping Sleeves, Expansion Joints

All interior and exterior ferrous metal surfaces, except finished surfaces, bearing surfaces, and stainless steel components, of valves, couplings, tapping sleeves, expansion joints and accessories shall be shop painted for corrosion protection. Apply the specified prime and intermediate and finish coat at the place of manufacturer.

Valve, piping, or coupling manufacturer's standard coating for exposed metal to atmospheric weathering environment or submerged in potable water will be acceptable, provided it is functionally equilalent to the following coating systems: Ameron "Amerlock 400 High-Solids Epoxy Coating", Carboline "Carboguard 891", 3M Scotchkote, or Tnemec "Series N140 Pota-Pox Plus". Coat valves the same as the adjacent piping.

Valve, flanges, bolts, nuts, and coupling manufacturer's standard coating for buried metal will be acceptable, provided it is functionally equivalent to the following coating systems: High-build coal tar epoxy; Ameron "Amercoat 78HB Coal Tar

Epoxy", Carboline "Bitumastic 300 M", Tnemec "46H-413 Hi-Build Tneme-Tar", or Sherwin-Williams "Hi-Mil Sher-Tar Epoxy".

Payment

Full compensation for "Painting" shall be considered as included in the contract items of work involved and no separate payment will be made therefor.

2.46. TRANSITION COUPLINGS

The Contractor shall use transition couplings to connect different pipes having different outside diameters or for connecting dissimilar pipe materials. The Contractor shall be determine the exact material type and outside diameter of the pipes to be connected, and shall provide the transition coupling at the work location before the existing system is interrupted. Coupling shall have an internal full circumference ring pipe stop at the midpoint of the coupling.

Provide shop applied lining and coating per "Painting" of these Technical Specifications. Coat buried bolts, nuts, and threads with corrosion resistant grease, then wrap the couplings with polyethylene wrap in accordance with "Polyethylene Sheet Wrap" of these Technical Specifications.

Transition couplings shall be in conformance to County Standard Drawing W-10. Products shall be Romac XR501, Smith Blair 413, Dresser 62, or approved equal.

Payment for furnishing and installing transition coupling shall be considered as included in the contract price paid for various contract items of work involved and no separate payment will be made therefor.

2.47. INSULATING UNIONS, FLANGES, COUPLINGS OR BUSHINGS

When dissimilar metals are used in conjunction with each other, suitable insulation shall be provided between adjacent surfaces so as to eliminate direct contact and any resultant electrolysis. Connections of dissimilar piping materials shall consist of a dielectric type isolation gasket, 1/8" thick, full faced type with outside diameter equal to the flange outside diameter, a full-length sleeve for each bolt, and two (2) insulating washers with two (2) steel washers for each bolt. Insulating gaskets or fittings shall be provided to prevent contact of copper, brass, or bronze pipe, tubing, fittings or appurtenances with stainless steel pipes, tubing, fittings, valves, or appurtenances. Coating for insulated unions, flanges, couplings, or bushings shall be coated with wax tape coating in accordance with "Wax Tape" of these Technical Specifications.

Submit manufacturer's data sheet for insulation unions, flanges, coupling, or bushings showing recommended installation procedures.

Full compensation for "Insulating Unions, Flanges, Couplings or Bushings" shall be considered as included in the contract items of work involved and no separate payment will be made therefor.

2.48. GATE VALVES

Submit complete assembly drawings, together with detailed specifications and data, covering materials used and accessories forming a part of the valves furnished.

Gate valves shall comply with AWWA Specification C 509 and these Technical Specifications.

Valves shall have a non-rising stem, resilient wedge, resilient seated, left hand opening (counterclockwise) and epoxy coated and lined. Minimum epoxy thickness shall be 8 mils. All valves shall have O ring stem seals. Body bolts shall be 316 stainless steel. End connections are flanged or mechanical joint as shown on the Plans. Provide shop applied lining and coating per "Painting", of these Technical Specifications.

Before valves or fittings are laid, all lumps, blisters and excess coating shall be removed from the bell. The inside of the bell shall than be wire-brushed and both the inside of the bell and the spigot end of the pipe wiped clean and dry. Field machining of pipe ends will be required if necessary to fit the PVC pipe to the hubs of the gate valves or fittings. If a joint is defective, it shall be cut out and replaced entirely with new material.

After installation, lubricate any bolts and nuts for corrosion protection with corrosion resistant grease per the manufacturer's recommendations and in accordance with "Corrosion Resistant Grease". Wrap any gate valves, tees, fittings, and coupling adapters with polyethylene sheet wrap or wax tape prior to placing concrete anchors, supports, or thrust blocks. The polyethylene sheet wrap or wax tape shall conform to these Technical Specifications, "Polyethylene Sheet Wrap" and "Wax Tape".

All valve boxes shall be supported by circular concrete collar. Valve boxes shall be kept plumb over the wrench nut of the gate valve and shall not rest on the gate valve. The box shall be flush with the surface of the finished pavement or at such other elevation designated by the Engineer. Backfill and compaction around the valve boxes shall conform to "Earthwork" and "Bedding and Backfill" of these Technical Specifications.

Gate valve box assemblies shall be installed per Standard Drawing No. W-3 and these Technical Specifications. Concrete shall conform to "Minor Concrete" of these Technical Specifications. Gate valve boxes shall be Brooks Products No. 3RT or approved equal with the word "WATER" or the letter "W" cast in the cover and shall be a loose fit in the box. The valve boxes shall be supplied with 8-inch PVC pipe sleeves. The PVC pipe shall conform to "Polyvinyl Chloride (PVC) Pipe" of these Technical Specifications. Reconstruct AC pavement per "Hot Mix Asphalt Concrete Pavement" of these Technical Specifications.

The gate valves shall be Mueller Series 2360-Cast Iron, Kennedy Valve Series 8571, Clow Series 2639-Full Body Ductile Iron or approved equal.

Full compensation for constructing gate valve assemblies of the sizes and in the locations shown on the Drawings or as directed by the Engineer shall be considered

as included in the contract items of work involved and no separate payment will be made therefor. Such construction shall include furnishing all labor, materials, tools, equipment, and incidentals and for doing all the work involved in installing gate valves and valve box assemblies, complete in place, including but not limited to furnishing and installing lubricant for bolts and nuts, polyethylene sheet wrap, concrete collars, thrust restraint devices, sawcutting, excavation, trenching, removal of water, bedding and backfill, slurry cement backfill, disinfection and bacteriological testing, compaction, pavement and/or surface restoration, and all appurtenant work and materials as shown on the Drawings, as specified in the 2006 Caltrans Standard Specifications and these Technical Specifications, and as directed by the Engineer.

Gate valves to be removed shall be considered as included in the contract items of work involved and no separate payment will be made therefor.

2.49. BLOW-OFF ASSEMBLY

The Contractor's attention is directed to "Order of Work" of these Technical Specifications which indicate that the Drawings have been prepared to reflect continuous positive and/or negative grades, with low and/or high points and blow-off and/or air/vacuum relief assemblies in the locations indicated on the plans. It shall be the Contractor's responsibility to ensure constant positive and/or negative grades for the new waterline. The Contractor shall be responsible to pothole and verify the alignment of the new waterline shown on the plans prior to construction. Refer to "Obstructions" of these Technical Specifications for additional requirements. If any obstructions are noted that would prevent constant positive or negative grades, such conflicts shall be brought to the Engineer's attention immediately. If additional low or high points must be constructed in the waterline, the Contractor shall indentify such locations and notify the Engineer in writing immediately. Blow-off and/or air and vacuum relief assemblies shall be constructed by the Contractor at such locations in accordance with these Technical Specifications, if so directed by the Engineer.

Blow-off assemblies shall be constructed a low points in the water main as directed by the Engineer, and shall be 1 ½" nominal and shall be constructed per San Luis Obispo County 2011 Standard Drawing W-5, and as directed by the Engineer. The location of the blow-off discharge assembly shall be as directed by the Engineer.

The contract price paid per each "BLOW-OFF ASSEMBLY" shall include full compensation for furnishing all labor, materials, tools, equipment, and incidentals and for doing all the work involved in furnishing and installing the blow-off assembly complete in place including saw cutting, excavation, trenching, removal of water, bedding and backfill, slurry cement backfill, compaction, tracer wire, detection tape, pavement and/or surface restoration, landscaping, vegetation and/or irrigation restoration, pressure testing, disinfection, bacteriological testing, and all appurtenant work and materials as shown on County Standard Drawing W-5, and as directed by the Engineer, and no additional compensation will be allowed therefor.

2.50. AIR AND VACUUM RELIEF ASSEMBLY

The Contractor's attention is directed to "Order of Work" of these Technical Specifications which indicate that the Drawings have been prepared to reflect continuous positive and/or negative grades, with low and/or high points and blow-off and/or air/vacuum relief assemblies in the locations indicated on the plans. It shall be the Contractor's responsibility to ensure constant positive and/or negative grades for the new waterline. The Contractor shall be responsible to pothole and verify the alignment of the new waterline shown on the plans prior to construction. Refer to "Obstructions" of these Technical Specifications for additional requirements. If any obstructions are noted that would prevent constant positive or negative grades, such conflicts shall be brought to the Engineer's attention immediately. If additional low or high points must be constructed in the waterline, the Contractor shall indentify such locations and notify the Engineer in writing immediately. Blow-off and/or air and vacuum relief assemblies shall be constructed by the Contractor at such locations in accordance with these Technical Specifications, if so directed by the Engineer.

Air and vacuum relief assemblies shall be constructed at high points in the watermain in locations shown on the Drawings and as directed by the Engineer. Air and vacuum relief assemblies shall be constructed per San Luis Obispo County 2011 Standard Drawing W-6, and as directed by the Engineer. Locations of the air and vacuum relief enclosures shall be as directed by the Engineer. Bollards shall be provided for the enclosures in locations shown on the Drawings and as directed by the Engineer in the field. Bollard construction shall conform to the detail provided in the Drawings. Enclosures and bollards shall be primed and painted in accordance with "Painting" of these Technical Specifications. The exterior color of the bollards and enclosures shall be as directed by the Engineer.

The contract price paid for each "AIR AND VACUUM RELIEF ASSEMBLY" shall include full compensation for furnishing all labor, materials, tools, equipment, and incidentals and for doing all the work involved in furnishing and installing the air and vacuum relief assemblies complete in place including bollards, and including saw cutting, excavation, trenching, removal of water, bedding and backfill, tracer wire, detection tape, compaction, pavement and/or surface restoration, landscaping, vegetation and/or irrigation restoration, pressure testing, disinfection, bacteriological testing, painting of bollards and enclosures, and all appurtenant work and materials as shown on San Luis Obispo County 2011 Standard Drawing W-6, the Drawings, these Technical Specifications, and as directed by the Engineer, and no additional compensation will be allowed therefor.

2.51. RECONNECT FIRE HYDRANTS

This work includes reconnection of existing fire hydrant assemblies to the new watermain at the locations shown on the plans, in accordance with the construction details shown on the Drawings, San Luis Obispo County 2011 Standard Drawing W-2, and these Technical Specifications. As shown on Drawing W-2, each hydrant shall be identified by a reflectorized blue raised pavement marker per Section 10.301c of the Uniform Fire Code. Sawcut, remove, and dispose of AC pavement as required, and remove existing pipe, gate valve assemblies and fittings in accordance with the Drawings and as required to reconnect the existing fire hydrant assemblies to the new watermain. Removals and reconnection shall be in accordance with the

Drawings and these Technical Specifications, and as directed by the Engineer. Reconstruct AC pavement in accordance with "Hot Mix Asphalt Concrete Pavement" of these Technical Specifications.

The contract lump sum price paid for the various types of fire hydrant reconnection conditions as follows:

1. "FIRE HYDRANT CONNECTION (RICHARD AVE AT 4+98)"

2. "FIRE HYDRANT CONNECTION (RICHARD AVE AT 5+98)"

shall include full compensation for furnishing all labor, materials, tools, equipment, and incidentals and for doing all the work involved in reconnecting the existing fire hydrants, complete in place, including potholing/exploratory excavation, sawcutting, removal and reconstruction of existing hot mix asphalt dikes and pavement, removal and disposal of existing pipe, fittings, valve assemblies and thrust blocks, trenching, disposal, backfilling, construction of piping, transition couplings, gate valve assemblies, fittings, thrust restraint and/or thrustblocks, temporary thrust restraint, pavement and/or surface restoration, reflectorized blue raised pavement marker, in-kind replacement of landscaping and irrigation, coordination with County Water Operations Personnel, as directed by the Engineer, and all appurtent work and materials as shown on the Plans, the San Luis Obispo County 2011 Public Improvement Standards, as specified in the 2006 Caltrans Standard Specifications and these Technical Specifications, and as directed by the Engineer, and no additional compensations will be allowed therefor.

Full compensation for reconnection of the existing fire hydrant at approximate Station 9+55 on Richard Avenue shall be considered as included in the price paid for "Connection Point – Richard Ave at Station 9+59" and no additional compensation will be allowed therefor.

2.52. REMOVE WHARF HEAD HYDRANTS

This work includes removal of existing wharf head hydrant assemblies, including existing valve assemblies, at the locations indicated on the plans. As directed by the Engineer, the wharf hydrants shall be salvaged and hauled to the County Service Area 10 water treatment plant yard at 1670 Cabrillo Ave, Cayucos. Removal of wharf hydrants shall include potholing/exploratory excavation, sawcutting, removal and disposal of existing paving, removal and disposal of existing gate valve assemblies and existing reflectorized blue raised pavement marker, salvaging and delivery of wharf head hydrants to the CSA 10 water yard, backfilling, pavement, surface and/or landscaping restoration (in kind), and incidentals associated with removal of the existing wharf head hydrants and all appurtenant work and materials shown on the Drawings, as specified in the 2006 Caltrans Standard Specifications and these Technical Specifications. Full compensation for removal of existing wharf head hydrant assemblies at the following locations

1. Shearer Ave Sta 19+25, 22' Right

2. Shearer Ave Sta 26+15, 24' Right

3. Shearer Ave Sta 30+16, 18' Left

shall be considered as included in the contract unit price paid for each "REMOVE WHARF HEAD HYDRANT."

Full compensation for removal of the existing wharf head hydrant assembly at Stuart Ave Sta 8+31, 18' Left shall be considered as included in the contract lump sum price paid for "CONNECTION POINT – STUART AVE. AND SANTA BARBARA AVE" and no additional compensation will be allowed therefor.

Full compensation for removal of existing wharf head hydrant assembly at Stuart Ave Sta 13+16, 22' Left shall be considered as included in the contract lump sum price paid for "FIRE HYDRANT ASSEMBLY – STUART AVE 13+16 LT" and no additional compensation will be allowed therefor.

2.53. FIRE HYDRANT CONSTRUCTION

This work includes construction of fire hydrant assemblies, including connection to the new watermain, at the locations shown on the plans, in accordance with the construction details shown on the Drawings, San Luis Obispo County 2011 Standard Drawing W-2, and these Technical Specifications. As shown on Drawing W-2, each hydrant shall be identified by a reflectorized blue raised pavement marker per Section 10.301c of the Uniform Fire Code. Sawcut, remove, and dispose of AC pavement as required, and remove existing pipe, gate valve assemblies, fittings and existing wharf head hydrants as may be required to complete construction of the new fire hydrant assemblies, in accordance with the Drawings and as required to connect to the new watermain. Removals, construction, connection to new watermains, and all appurtenant work and materials, including bollards, shall be in accordance with the Drawings and these Technical Specifications, and as directed by the Engineer. Reconstruct AC pavement in accordance with "Hot Mix Asphalt Concrete Pavement" of these Technical Specifications.

The contract lump sum price paid for the various types of fire hydrant assembly construction as follows:

1. "FIRE HYDRANT ASSEMBLY – SHEARER AVE 17+15 RT", per Detail 3 on Sheet CD-1 of the Drawings

2. "FIRE HYDRANT ASSEMBLY – SHEARER AVE 20+00 LT", per Detail 5 on Sheet CD-1 of the Drawings

3. "FIRE HYDRANT ASSEMBLY – SHEARER AVE 25+00 RT", per Detail 1 on Sheet CD-2 of the Drawings

4. "FIRE HYDRANT ASSEMBLY – SHEARER AVE 30+00 LT", per Detail 2 on Sheet CD-2 of the Drawings

5. "FIRE HYDRANT ASSEMBLY – STUART AVE 13+13 LT", per Detail 2 on Sheet CD-4 of the Drawings

shall include full compensation for furnishing all labor, materials, tools, equipment, and incidentals and for doing all the work involved in installing new fire hydrant assemblies complete in place, including bollards, gate valves, valve box assemblies, pipe fittings, transition couplings, thrust restraint and/or thrust blocks, potholing/exploratory excavation, sawcutting, pavement removal, disposal, trenching and removal of water, bedding and backfill, tracer wire, detection tape, compaction, temporary thrust restraint, pavement and/or surface restoration, reflectorized blue raised pavement marker, in-kind replacement of landscaping and irrigation, coordination with County Water Operations Personnel, as directed by the Engineer, and all appurtent work and materials in the locations shown on the Drawings, in accordance with the details shown on the Drawings, the San Luis Obispo County 2011 Public Improvement Standards, as specified in the 2006 Caltrans Standard Specifications and these Technical Specifications, and as directed by the Engineer, and no additional compensations will be allowed therefor.

Full compensation for removal of the existing wharf head hydrant assembly at Stuart Ave Sta 13+16, 22' Left shall be considered as included in contract lump sum price paid for "FIRE HYDRANT ASSEMBLY – STUART AVE 13+16 LT" and no additional compensation will be allowed therefor. Removal of the wharf hydrant assembly at this location shall be in accordance with "Remove Wharf Head Hydrants" of these Technical Specifications.

Full compensation for removal of the existing wharf head hydrant assembly and construction of the new fire hydrant assembly at Stuart Ave Sta 8+31, 18' Left shall be considered as included in the contract lump sum price paid for "CONNECTION POINT – STUART AVE. AND SANTA BARBARA AVE" and no additional compensation will be allowed therefor.

2.54. CONNECTIONS TO THE EXISTING WATER MAINS

Unless indicated otherwise, the work of this section generally includes connection of the new watermain to the existing water system, and additional work shown on the Drawings and referenced in other sections of these Technical Specifications. The Contractor shall determine material and the exact outside diameter of the existing pipe, and the size and type of existing fittings and/or gate valves, and shall have on hand the correct size of couplings or adapters to connect the existing mains to the new system prior to cutting into the existing mains.

Contractor shall request approval from the Engineer in writing at least 48 hours in advance for connections to existing water mains. Contractor shall receive permission from the Engineer prior to undertaking connections.

If at any time, the system pressure drops to less than five (5) psi at any portion in the water distribution system, bacteriological samples shall be collected from water representative of the water quality in the affected portions of the system. Direct connection to the existing water system shall be performed during the hours indicated in "Order of Work" of these Technical Specifications and as directed by the

Engineer, and connection shall not be permitted until the newly installed portion has passed bacteriological testing and a physical check by the Engineer.

Separation shall be achieved by the installation of a temporary steel plate or temporary blocking device per San Luis Obispo County 2011 Standard Drawing W-8.

Facilities shall be provided for dewatering and for disposal of the water removed from the dewatered lines and excavations without damage to adjacent property.

Special care shall be taken to prevent contamination when dewatering, cutting into, and making connections with potable water piping. Trench water, mud, or other contaminating substances shall not be permitted to enter the lines. The interior of all pipe, fittings, and valves installed in such connections shall be thoroughly cleaned and then swabbed with or dipped in a 200 mg/L chlorine solution.

Pavement restoration shall conform to San Luis Obispo County 2011 Standard Drawing No. R-3 and/or R-3a. A 12" minimum tee section shall be required for the pavement restoration.

The contract lump sum price paid for the following connections to existing:

1. "CONNECTION POINT – SHEARER AVE. AND CHANEY AVE.", per Detail 1 on Sheet CD-1 of the Drawings

2. "CONNECTION POINT – SHEARER AVE. AND HAINES AVE.", per Detail 2 on Sheet CD-1 of the Drawings

3. "CONNECTION POINT – SHEARER AVE. AND ADOREE AVE.", per Detail 4 on Sheet CD-1 of the Drawings

4. "CONNECTION POINT – SHEARER AVE. AND THALBERG AVE.", per Detail 6 on Sheet CD-1 of the Drawings

5. "CONNECTION POINT – SHEARER AVE. AND SERENO AVE.", per Detail 3 on Sheet CD-2 of the Drawings

6. "CONNECTION POINT – SHEARER AVE. AND CERRO GORDO AVE.", per Detail 4 on Sheet CD-2 of the Drawings

7. "CONNECTION POINT – SHEARER AVE. AND HACIENDA AVE.", per Detail 5 on Sheet CD-2 of the Drawings

8. "CONNECTION POINT – RICHARD AVE. AT STATION 4+15", per Detail 1 on Sheet CD-3 of the Drawings

9. "CONNECTION POINT – RICHARD AVE AT STATION 9+59", per Detail 5 on Sheet CD-3 of the Drawings

10. "CONNECTION POINT – STUART AVE. AND SANTA BARBARA AVE.", per Detail 1 on Sheet CD-4 of the Drawings

11. “8" CROSS ASSEMBLY (RICHARD AVE AND STUART AVE.)”, per Detail 4 on Sheet CD-3 of the Drawings

shall include full compensation for furnishing all labor, materials, tools, equipment, and incidentals and for doing all the work involved in pothole/exploratory excavations, sawcutting pavement, excavation, trenching, removal of water, concrete plugging of abandoned pipe, removal and disposal of existing pipe, gate valve assemblies, fittings, and thrustblocks as required, installation of new piping, fittings, transition couplings, reducers, tees, bends, crosses, blind flange caps, coating, temporary steel plates, temporary thrust restraint, thrust blocks and/or thrust restraints, flushing, pressure testing, bacteriological disinfection, tracer wire, detection tape, bedding, backfilling, compaction, complete in place, including pavement and/or surface restoration, in-kind replacement of landscaping and irrigation, at the locations shown on the Drawings, in accordance with the details shown on the Drawings, as specified in the San Luis Obispo County 2011 Public Improvement Standards, 2006 Caltrans Standard Specifications and these Technical Specifications, and as directed by the Engineer, and no additional compensation will be allowed therefor.

Full compensation for removal of the existing wharf head hydrant assembly and construction of the new fire hydrant assembly at Stuart Ave Sta 8+31, 18’ Left shall be considered as included in the contract lump sum price paid for “CONNECTION POINT – STUART AVE. AND SANTA BARBARA AVE” and no additional compensation will be allowed therefor. Removal of the wharf hydrant assembly at this location shall be in accordance with “Remove Wharf Head Hydrants” of these Technical Specifications. Construction of the fire hydrant assembly at this location shall be in accordance with “Fire Hydrant Construction” of these Technical Specifications.

2.55. SERVICE LATERAL

All existing water services shall be connected to the new water main after the newly installed portion of the water pipeline has passed all bacteriological testing and is ready to be brought into service. Water service connections shall be constructed in accordance with San Luis Obispo County 2011 Public Improvement Standards Drawing W-4, and shall include new corporation stops, removal and disposal of existing angle meter stops and lateral lines, and connection to existing meters with new service saddles, lines and angle meter stops. The contract includes a bid item for removal, disposal and replacement of existing damaged meter boxes that have been designated by the Engineer for replacement. Materials and construction for replacing existing meter boxes shall be in accordance with San Luis Obispo County 2011 Public Improvement Standards Drawing W-4.

It is anticipated that the Contractor will construct the service laterals through constructing open trenches. The Contractor may be allowed to construct the laterals by trenchless methods, subject to written approval by the Engineer in advance of construction. The Contractor will be required to demonstrate to the Engineer’s

satisfaction that such construction will provide adequate clearance from existing utilities and in all respects meet the requirements of Contract Documents.

The contract unit price paid per each

1. "SERVICE CONNECTION (1-SERVICE)"

2. "SERVICE CONNECTION (2-SERVICE)"

shall include full compensation for furnishing all labor, materials, tools, equipment, and incidentals and for doing all the work involved in reconstruction of the service laterals and reconnection to the existing water meters, complete in place, including pothole/exploratory excavations, sawcutting pavement, excavation, trenching, removal of water, providing and installing service saddles, corporation stops, angle meter stops, polyethylene pipe, removal and disposal of existing pipe, corporation and angle meter stops as required, backfilling, compaction, complete in place, including pavement and/or surface restoration, in-kind replacement of existing landscaping and irrigation, at the locations shown on the Drawings, as specified in the San Luis Obispo County 2011 Public Improvement Standards, 2006 Caltrans Standard Specifications and these Technical Specifications, and as directed by the Engineer, and no additional compensation will be allowed therefor.

The contract unit price paid per each for "WATER METER BOX REPLACEMENT" shall include full compensation for furnishing all labor, materials, tools, equipment, and incidentals and for doing all the work involved in replacement of existing damaged water meter boxes that are identified by the Engineer for replacement, complete in place, including sawcutting pavement as required, excavation, removal of water, providing new water meter box and lid, removal and disposal of existing water meter box and lid as required, backfilling, compaction, complete in place, including pavement and/or surface restoration, in-kind replacement of existing landscaping and irrigation, as specified in the San Luis Obispo County 2011 Public Improvement Standards, 2006 Caltrans Standard Specifications and these Technical Specifications, and as directed by the Engineer, and no additional compensation will be allowed therefor.

2.56. THRUST RESTRAINT

Thrust restraint shall be furnished and installed at all bends of 11 ¼ degrees or more, at each reducer, behind each tee, at each cross which is valved in such a manner that it can act as a tee, at fire hydrant bury elbows and behind each plug or cap. Thrust restraint shall be provided by concrete thrust block unless otherwise approved for a specific location by the Engineer in advance. Where mechanical joint restraints are used, harness restraint devices shall be furnished and installed to restrain push-on joints adjacent to restrained fittings according to the manufacturer's installation recommendations. Thrust restraint devices are not required at flanged joints unless the joint acts in a manner which requires restraint mechanical pipe joint restraints, unless otherwise specifically indicated on the Project Plans. Mechanical joint restraints shall be installed in accordance with AWWA C600-99 and the manufacturer's recommendations. The Contractor shall be responsible to plan,

provide and install all temporary and permanent thrust restraint as required for progress of the work, including pressure testing, as directed by the Engineer.

Payment for thrust restraint devices, including fittings and hardware, shall be considered as included in the contract items of work involved and no separate payment will be made therefor.

CONCRETE THRUST BLOCKS

Placement of concrete shall not be permitted without submitting to the Engineer 24 hour notice. Thrust blocks shall be placed at all bends of 11 ¼ degrees or more, behind each tee or at each cross which is valved in such a manner that it can act as a tee, at the back of each fire hydrants and behind each plug or blind flange cap. Anchor blocks shall be installed on all bend of 11 ¼ degrees or more for vertical (downward) bend. The thrust block shall extend from the fitting to undisturbed soil, and shall be kept clear of the joints, and shall be of such bearing area using a soil horizontal bearing strength value of 1,000 pounds per squares foot unless directed otherwise by the Engineer. In lieu of the above, movement may be prevented by the use of approved pipe restraints if approved by the Engineer.

Portland cement concrete for thrust blocks shall be produced from commercial quality aggregates and cement and shall conform to "Minor Concrete" of these Technical Specifications.

Before any thrust block is poured against a cap, plug, or mechanically joined fitting, the fitting shall be wrapped in polyethylene sheet wrap or wax tape. No concrete shall be poured against the bare pipe.

Provide curing of thrust blocks and anchor blocks by prompt backfill after initial curing period as directed by the Engineer. Prior to filling the pipeline with water, concrete thrust blocks shall cure a minimum of three days unless an approved temporary restraint system is installed.

Protect existing thrust blocks in place or shore to resist the thrust by a means approved by the Engineer and reconstruct. If the thrust blocks are exposed or rendered to be ineffective in the opinion of the Engineer, reconstruct them to bear against firm unexcavated or backfill material. Notify the Engineer within 24 hours when this situation is identified.

Test compaction of the backfill material before pouring any concrete thrust block.

Payment for furnishing and installing thrust blocks in conformance with these Technical Specifications, complete in place including, aggregate, admixtures, water, and an approved temporary restraint system (if required), shall be considered as included in the price paid for the various contract items of the water system and no separate payment will be made therefor.

2.57. AGGREGATE BASE

Aggregate base shall be Class 2 and shall conform to the provisions in Section 26, "Aggregate Subbases," of the 2006 Caltrans Standard Specifications and these Technical Specifications.

A minimum of 6" of Class 2 Aggregate Base or matching existing thickness, whichever is greater, shall be placed under all asphalt concrete pavement.

Payment for aggregate base shall be considered as included in the contract items of work involved and no separate payment will be made therefor.

2.58. HOT MIX ASPHALT CONCRETE PAVEMENT

Hot Mix Asphalt (HOT MIX ASPHALT) concrete pavement shall have a structural road repair section conforming to the 2011 San Luis Obispo County Standards Drawing R-3 and R-3a. Trench repair shall include a 12" T-section as shown on Drawing R-3 and R-3a.

HOT MIX ASPHALT concrete pavement shall be Type A using the Method process and shall conform to the provisions in Section 39, "Hot Mix Asphalt," of the 2006 Caltrans Standard Specifications and these Technical Specifications.

The aggregate for HOT MIX ASPHALT Type A shall comply with the ½ inch maximum grading.

The grade of asphalt binder to be mixed with aggregate for HOT MIX ASPHALT Type A shall be Performance Grade PG 64-10 and shall conform to the provisions in Section 92, "Asphalt," of the 2006 Caltrans Standard Specifications.

Smoothness: The first paragraph 39-1.12A is changed to read: "Determine HOT MIX ASPHALT smoothness with a straightedge. Section 30-1.12C "Profilograph," of the 2006 Caltrans Standard Specifications shall not apply. The fourth paragraph of Section 39-1.12D, "Smoothness Correction," is hereby modified to read: "After grinding, measure the ground HOT MIX ASPHALT pavement surface with a 12-foot straightedge until the pavement is within specified tolerances. If straight edged pavement cannot be ground to within specified tolerances, remove and replace the pavement."

A tack coat of emulsified asphalt shall be applied to all exposed sawcut surfaces. The area shall be filled with fresh hot asphaltic concrete mix in lifts of the same depths as the adjacent area, then compacted by rolling to the specified surface density and smoothness.

Payment for Hot Mix Asphalt for trench repair and/or pavement restoration shall be considered as included in the contract items of work involved and no separate payment will be made therefor.

2.59. MINOR CONCRETE

Portland cement concrete for minor structures, concrete collars for gate valves, pipe encasement, and thrust blocks shall conform to the provisions in Section 90-10,

"Minor Concrete," of the 2006 Caltrans Standard Specifications and these Technical Specifications.

Minor concrete for structures shall contain not less than 550 pounds of cementitious material per cubic yard. Restoration of existing curb, gutter, sidewalk and driveways shall be drilled and dowelled with #4 rebar, 12" long, 12" O.C., as directed by the Engineer.

Concrete for thrust blocks shall contain not less than 470 pounds of cementitious material per cubic yard. The native material shall be compacted to a minimum relative compaction of 95%.

Payment for concrete placed shall be considered as included in the contract items of work involved and no separate payment will be made therefor.

Slurry backfill shall be used when cover over the top of the pipe is less than 3 feet, and at locations as shown on the Plans, as directed by the Engineer, and shall be placed in accordance with San Luis Obispo County 2011 Public Improvement Standards Drawing U-4b. Slurry backfill shall contain not less than 188 pounds (2-sack) of material per cubic yard. Payment for slurry backfill shall be considered as included in the contract items of work involved and no separate payment will be made therefor.

2.60. PROGRESS RESTORATION

All restoration and clean up work must follow closely to the completed trenching operation including laying, compacting, backfilling, and paving, except when temporary pavement patching and steel plate bridging is utilized per "Maintaining Traffic" of these Technical Specifications.

Payment for Progress of Restoration shall be considered as included in the contract items of work involved and no separate payment will be made therefor.

2.61. TESTING PIPELINES

The pressure and leakage tests will be performed at the same time.

After the valves have been installed, the pipeline shall be filled with water for a minimum of 24 hours and then subjected to a hydrostatic pressure test. Unless otherwise specified, the test pressures are shown in Table 1 and is measured at the lowest elevation of the system. The pressure test will be made after backfilling has been completed but before placement of permanent paving. A test shall be made only after all backfilling has been completed and at least 36 hours after the last concrete thrust or reaction backing has been cast with high early strength cement, or at least 7 days after the last concrete thrust or reaction backing has been cast with standard cement. The duration of the test shall be 2 hours unless otherwise directed by the Engineer.

Pressure Testing Plan: Contractor shall submit a pressure testing plan, satisfactory to the Engineer, a minimum of 48 hours prior to the beginning of any pressure testing.

The plan shall show location to be tested, sequence of testing, location of temporary components for testing, segments isolated, and other relevant testing information.

Procedure: Each section or pipeline shall be slowly filled with water, and the specified test pressure shall be applied by means of a pump connected to the pipe in a manner satisfactory to the Engineer. The pump, pipe connection(s) and all necessary apparatus except the water meter shall be furnished by the Contractor.

All pressure gauges shall be approved by the Engineer.

During the filling of the pipe and before the application of the specified test pressure, all air shall be expelled from the pipeline if necessary, by means of taps at points of highest elevation, and, after completion of the test, the taps shall be tightly plugged, unless otherwise specified. During the test, all exposed pipe, fittings, valves, hydrants, and PVC couplings shall be carefully examined. Any joint at which the accumulated leakage exceeds the allowable rate specified in Table 1 shall be rejected. All cracked or defective elements shall be removed and replaced by the Contractor at his/her expense. The test shall then be repeated until the results are satisfactory to the Engineer.

TABLE 1: ALLOWABLE LEAKAGE PER 1000 FEET OR 50 JOINTS (U.S. GALLONS PER HOUR)

NOMINAL PIPE SIZE (INCHES)	AVERAGE TEST PRESSURE (PSI)
	215
4	0.40
6	0.59
8	0.79
12	1.19

Overall Leakage: No pipe installation will be accepted until or unless the leakage for the section of line tested is less than the rate of leakage specified in Table 1. In calculating the leakage the Engineer will allow for the number of joints added to the pipeline, owing to the use of pipe lengths smaller than 20 feet, for which the data in Table 1 applies. If the test leakage in any section is greater than that permitted, the Contractor shall locate and repair the defective joints at his/her own expense until the leakage is within the permitted allowance.

Pressure testing against valves shall not be allowed.

Payment for pressure testing including furnishing all labor, materials, tools, equipment, incidentals and all work involved in pressure testing of the installed system, complete in place, including but not limited to, preparation of testing plan, testing appurtenances, services, and testing laterals as shown on the Plans, and as specified in these Technical Specifications, and as directed by the Engineer, shall be considered as included in the contract price paid for the various items of work require pressure testing, and no separate payment will be made therefor.

2.62. DISINFECTION, FLUSHING, BACTERIOLOGICAL TESTING, CONNECTION TO DISTRIBUTION, AND DOCUMENTATION

The Contractor shall disinfect, dechlorinate (if necessary), drain, and dispose of heavily chlorinated water. The Contractor shall submit a disinfection plan to the Engineer for review and approval prior to beginning the disinfection procedure.

Bacteriological and physical samples will not be collected until pressure and leakage testing has been completed and approved by the Engineer.

The Contractor shall provide a minimum of 48 hours advance notice to the Engineer prior to the scheduled time sampling is requested.

County staff will collect samples and provide bacteriological and physical analysis. The cost of the initial sampling and analysis shall be paid by the County. In the event that follow-up analyses are required due to unacceptable test results, the Contractor will be liable for all costs associated with the follow-up sampling and analysis.

Direct connection to the existing water system shall not be permitted until the newly installed portion has passed bacteriological and physical testing. Maintain isolation from the existing water system per Health Department requirements and the San Luis Obispo County 2011 Public Improvement Standards Drawing W-9 and per AWWA C651.

DISINFECTION

Disinfection shall be in accordance with the San Luis Obispo County Department of Public Works Procedural Memorandum O-3 (Revised 15 July 2002), included in these Technical Specifications. Chlorination will be accomplished using the continuous feed method. The section of pipeline to be chlorinated shall be filled entirely with water. Liquid Sodium hypochlorite solution conforming to ANS1/AWWA B300 standards shall be fed at or before the entry point in an amount sufficient enough to produce not less than 25 mg/L of free chlorine residual throughout the new pipeline and its appurtenances. The chlorinated water shall be retained in the main for a minimum of 24 hours. At the end of the 24 hour period, the chlorinated water in all portions of the main shall have a free chlorine residual of not less than 10 mg/L.

FLUSHING

Heavily chlorinated water shall be flushed from the main following the required minimum 24 hour contact time period. All main fittings, valves, and branches must be flushed. The chlorinated water shall be flushed until chlorine measurements show that the concentration of free chlorine in the exiting water is not higher than the water in the distribution system (typically 2.0 mg/L).

If the disposal of heavily chlorinated water will cause damage to the environment or a waterway, then enough of a neutralizing chemical shall be applied to the water to

be discharged so that no free chlorine residual is detected. Approved neutralization techniques must be used in accordance with AWWA C6501-05, Appendix C.

Any discharge created from dechlorination, flushing, pumping, or dewatering shall be in accordance with the California Regional Water Quality Control Board NPDES Permit for Discharges with Low Threat to Water Quality, Receiving Water Limitations. Any discharge shall not cause the following limits to be exceeded in the receiving water.

TABLE 2: DISCHARGES WITH LOW THREAT TO WATER QUALITY, RECEIVING WATER LIMITATIONS

CONSTITUENT	MAXIMUM OR RANGE
Total Chlorine Residual	Must not be detected
pH	Between 7.0 and 8.3 at all times, and not changed more than 0.5 units
Temperature	Maximum increase of 5°F
Colour	Maximum increase of 15 colour units
Dissolved Oxygen	Not to be depressed below 5.0 mg/L
Where upstream water turbidity is…	The receiving water shall not be increased more than…
Less than 25 NTUs	5 NTUs
25 – 50 NTU	20%
50 – 100 NTU	10 NTUs
Greater than 100 NTU	10%

BACTERIOLOGICAL ANALYSIS

Bacteriological samples will be collected and analyzed by County staff following the SLO County Procedural Memorandum O-3. Bacteriological analysis on water in the new pipeline shall be done after flushing but before it is connected to the distribution system. Two consecutive sets of acceptable samples, taken at least 24 hours apart, shall be collected from the new pipeline. At least one set of samples shall be collected from every 1200 feet of the new pipeline, plus one set from the end of the line and at least one set from each branch. The results for total coliform and E. coli must be negative (no coliform present) and hetrotrophic plate counts must be less than 500 CFU/mL before connecting the new pipeline and releasing water for use by customers.

TABLE 3: BACTERIOLOGICAL ACCEPTANCE LIMITS

CONSTITUENT	ACCEPTANCE LIMIT
Total coliform/E. coli	<1 MPN / 100 mL
Heterotrophic Plate Count (HPC)	< 500 CFU / mL

If sample results indicate the presence of coliforms or an HPC > 500 CFU / mL, flushing shall be resumed and additional sets of coliform and HPC samples shall be collected until 2 sets (collected at least 24 hours apart), show the absence of coliforms and HPCs < 500 CFU / mL.

PHYSICAL ANALYSIS

Physical samples will be collected and analyzed by County staff. Sample location and frequency will be determined by County staff.

TABLE 4: PHYSICAL ACCEPTANCE LIMITS

CONSTITUENT	ACCEPTANCE LIMIT	MAXIMUM CONTAMINANT LIMIT
Odor	< 3 TON	3 TON
Turbidity	< 1 NTU	5 NTU
Colour	< 15 CU	15 NTU

SAMPLES

Samples shall be collected by the Contractor on working days (Monday through Friday) and shall arrive at the Lab no later than 3:00 PM (Monday – Thursday) and no later than 12:00 noon on Fridays. Results for coliform testing will be available within 24 hours. Other test results will be available with 48 hours.

NOTIFICATION PROCEDURE

Notification of analytical results shall be in accordance with the San Luis Obispo County Department of Public Works Procedural Memorandum O-3, Notification Procedure.

CONNECTION TO DISTRIBUTION SYSTEM

When all bacteriological and physical test results are satisfactory and approved by the Distribution Operator and the Engineer, the new pipeline may be connected to the distribution system and placed in service.

DROP IN PRESSURE

If at any time, the system pressure drops to less than five (5) psi, bacteriological samples shall be collected from water representative of the water quality in the affected portions of the system.

DOCUMENTATION

Accurate records shall be made by the Contractor to document the pipeline installation conditions and chlorine residual data. The records should include documentation of the date/time of any disinfection, flushing, sample collection, and/or connection to the distribution system. The records should identify who performed the work and who release the pipeline for service.

A record must be maintained of any discharged created. The record must document the volume of the discharge and location and description of the receiving area. Discharge records must include documentation of dechlorination and on-going confirmation that no total chlorine residual has been detected throughout the

discharge event. In the event that the discharge enters surface water, analytical results of the NPDES Discharge Permit requirements must be documented.

PAYMENT

Payment for "DISINFECTION, FLUSHING, BACTERIOLOGICAL TESTING, CONNECTION TO DISTRIBUTION, AND DOCUMENTATION", including furnishing all labor, materials, tools, equipment and incidentals and for doing all the work involved in disinfecting the installed system, complete in place, including but not limited to, preparation of disinfection plan, sample collection, dechlorination, flushing, disposal of dechlorinated water, and chlorine swabbing of connection fittings shall be considered as included in the contract items of work involved and no separate payment will be made therefor.

2.63. SURVEY MONUMENT AND WELL

Survey monument and wells shall conform to the provisions herein. The Contractor is responsible for protecting survey monuments in the construction work area. The County has identified eight (8) survey monuments that may be disturbed by construction activities. The Contractor shall be responsible to coordinate with the Engineer prior to construction to facilitate field identification of such monuments by the County's survey crew in the field prior to construction activities that would disturb the existing monuments. Should the Contractor identify a survey monument which does not appear on the Drawings and/or has not been identified by the Engineer and is at risk of being destroyed, the Contractor shall alert the Engineer immediately. The Engineer shall take the necessary steps to have the monument located by the County's Survey Crew, and the Contractor shall ensure that such monuments have been located by the Survey Crew prior to commencing with construction that would disturb such monuments.

Should a monument be destroyed, it will need to be replaced in a County standard monument well box. Construction of survey monuments and wells shall conform with the 2011 San Luis Obispo County Public Improvement Standards, Drawing M-1. Setting of monument wells shall be performed after the final paving has been completed. Traffic control shall be maintained around each monument well as provided elsewhere in these Technical Specifications until the concrete has obtained sufficient strength as determined by the Engineer. The Contractor shall be responsible to coordinate with the Engineer in advance of construction to facilitate the County's Survey Crew sufficient time to set offset straddlers for the Contractor to construct the survey monument and well. The Contractor shall construct the 2" galvanized iron pipe and monument well assembly centered on the offset straddlers provided by the County's Surevey Crew. The County will fill the iron pipe with concrete and set the brass cap after the Contractor completes construction of the monument well.

The contract unit price paid per each for "SURVEY MONUMENT AND WELL" shall include full compensation for furnishing all labor, materials, tools, equipment

and incidentals and for doing all of the work involved, complete in place, including all coordination with the Engineer, providing and constructing the precast monument well, cover and concrete collar, including sawcutting pavement as required, excavation, removal and disposal of excess or unsuitable material, as specified in the San Luis Obispo County 2011 Public Improvement Standards, 2006 Caltrans Standard Specifications and these Technical Specifications, and as directed by the Engineer, and no additional compensation will be allowed therefor.

SECTION 3

ENVIRONMENTAL PERMIT SUMMARY FORM

SAN LUIS OBISPO COUNTY
DEPARTMENT OF PUBLIC WORKS
Noel King, Director

County Government Center, Room 207 • San Luis Obispo CA 93408 • (805) 781-5252
Fax (805) 781-1229 email address: pwd@co.slo.ca.us

ENVIRONMENTAL PERMIT SUMMARY FORM

Date: December 16, 2011

To: Eric Laurie, Utilities

From: Kate Ballantyne, Environmental Programs Division

Subject: **Environmental Review & Permit Status for the** CSA 10A Waterline Upgrade Project; ED11-022 (300383)

The environmental review and regulatory permit processes for the above referenced project are complete. The following is a summary of the environmental requirements for the project:

Permit	Status	Attachments ?
CEQA Review	Categorically exempt	X
NEPA Review	Not applicable, no federal permits or funding	
Coastal Permit	Exempt- replacement of a necessary utility connection	X
CZMA	Not applicable, no federal action	
CDFG 1601	Not applicable, not in stream zone	
USACOE 404	Not applicable, not below ordinary high water	
NMFS ESA	Not applicable, no listed species effects	
USFWS ESA	Not applicable, no listed species effects	
RWQCB 401	Not applicable, no 404 permit required	
NPDES	Not applicable, less than 1 acre disturbance	

The special environmental conditions for this project are:

Ensure conformance with project description contained in the CEQA document (attached CE and coastal exemption). Changes to the project description require review by environmental staff.

Archaeological monitoring required at (Hacienda and Shearer) and at (Shearer and Chaney). Coordinate with Kate at least two weeks before initiation of work.

SAN LUIS OBISPO COUNTY

DEPARTMENT OF PLANNING AND BUILDING

JASON GIFFEN
DIRECTOR

ELLEN CARROLL
ENVIRONMENTAL COORDINATOR

NOTICE OF EXEMPTION

TO: County Clerk
County of San Luis Obispo

San Luis Obispo County Department of Public Works; CSA 10a Waterline Upgrades; ED11-022 (300383)

Project Title

Shearer Avenue, and portions of Stuart Avenue and Richard Avenue, in the community of Cayucos.

Project Location - Specific

San Luis Obispo County

Project Location – County

Upgrade existing 4 inch waterlines with 8 inch waterlines to improve fire flows.

Description of Nature and Purpose of Project

County of San Luis Obispo

Name of Public Agency Approving Project

San Luis Obispo County Department of Public Works, County Government Center, Room 207, 93408

Name of Person or Agency Carrying Out Project/Beneficiaries of Project

Exempt Status: (Check One)

___	Ministerial	{Sec. 21080(b)(1); 15268}
___	Declared Emergency	{Sec. 21080(b)(3); 15269(a)}
___	Emergency Project	{Sec. 21080(b)(4); 15269(b)(c)}
X	Categorical Exemption	{Sec. 15302; Class: 2(c)}

Reasons why project is exempt:
The project is the replacement of existing undersized utilities (waterlines) with the current standard size necessary to meet fire safety flows.

Contact Person, Telephone: Kate Ballantyne, Environmental Programs Division, (805) 781-5252

If filed by applicant:
1. Attach certified document of exemption finding
2. Has a notice of exemption been filed by the public agency approving the project?
Yes__ No__

Signature Ellen Carroll Date Sept 19, 2011

Name (Print) Ellen Carroll Title Environmental Coordinator

SAN LUIS OBISPO COUNTY
DEPARTMENT OF PUBLIC WORKS
Paavo Ogren, Director
County Government Center, Room 207 • San Luis Obispo CA 93408 • (805) 781-5252
Fax (805) 781-1229 email address: pwd@co.slo.ca.us

Memorandum

Date: September 13, 2011

To: Nancy Orton, Supervising Planner

From: Kate Ballantyne, Environmental Resource Specialist

Subject: Request for Coastal Permit Determination: CSA 10a Waterline Upgrade Project; ED11-022/300383

The purpose of this memorandum is to request your determination as to the need for a coastal permit for the above referenced project.

Project Description: The Department of Public Works proposes to upgrade three waterlines in south Cayucos to meet fire flow standards. 4 inch lines will be replaced with 8 inch lines. Please refer to the attached memo to Ellen Carroll for full project details.

All work will take place in the paved roadway.

Project Location: Shearer Avenue and portions of Stuart Avenue and Richard Avenue, in the community of Cayucos (see attached graphic).

☑ The project described above is exempt from the land use permit requirements of Title 23 of the San Luis Obispo County Code for the following reason(s):
Section 23.03.040d.(8)(iii) replacement of a necessary utility connection.

☐ The project described above is NOT exempt from the permit requirements of Title 23 of the San Luis Obispo County Code. Please forward a complete Coastal Development Permit application to us as soon as possible. No work can commence until a permit has been granted.

☐ This project also requires a Coastal Development Permit from the Coastal Commission.

Comments:

N. Orton
Signature

12-16-11
Date

SAN LUIS OBISPO COUNTY
DEPARTMENT OF PUBLIC WORKS
Paavo Ogren, Director

County Government Center, Room 207 • San Luis Obispo CA 93408 • (805) 781-5252
Fax (805) 781-1229 email address: pwd@co.slo.ca.us

September 12, 2011

MEMORANDUM

TO: Ellen Carroll, Environmental Coordinator

FROM: Kate Ballantyne, Environmental Programs Division

SUBJECT: Categorical Exemption for a waterline upgrade in Cayucos; ED11-022 (300383)

Hi Ellen,

The Department of Public Works is proposing to upgrade existing waterlines in Cayucos to meet current fire flow standards. We are requesting a CE for this project based on its limited size and limited potential for adverse environmental effects.

Background

Existing Water System Issues

A significant portion of the existing CSA 10A Water System cannot produce minimum residential fire flow.

On August 9, 2010, a Water System fire flow test was performed on fifteen of sixty existing fire hydrants and wharfheads (25% of the Water System) located in various locations within the Water System. The fire flow test was conducted by County Operations staff and the Cayucos Fire Department.

Utilizing the flow test results and Water System as-builts, Utilities Engineering staff created and calibrated a WaterCAD hydraulic model of the Water System. The hydraulic model reveals that the existing Water System does not meet California Fire Code (CFC) required minimum residential flows in all areas.

Project

This project proposes to upgrade portions of the CSA 10A water system to accommodate the required fire flow and peak demand.

The proposed Waterline Upgrade Project consists of replacing the existing 4-inch waterlines on Shearer Avenue, and portions of Stuart Avenue and Richard Avenue, with 8-inch waterlines. A map of these improvements is attached.

This project proposes to:

- Upsize 3,800 linear feet of existing 4-inch steel pipeline to 8-inch PVC.

Pipeline – The proposed project includes three segments of pipeline, as shown in the attached map and as follows:

- Upsize existing 4-inch steel Shearer Avenue pipeline, approximately 2,650 feet in length, from the Hacienda Drive, south to Chaney Avenue, to 8-inch PVC.

- Upsize existing 4-inch steel Stuart Avenue pipeline, approximately 550 feet in length, from Santa Barbara Avenue, east to the end of Stuart Avenue, to 8-inch PVC.

- Upsize existing 4-inch portion of Richard Avenue steel pipeline, approximately 600 feet in length, located approximately 300 feet either side of Stuart Avenue, to 8-inch PVC.

All waterline replacement will be contained in the County road right-of-way.

This project is categorically exempt from CEQA pursuant to section 15302(c) of the State CEQA Guidelines because it is considered to be a replacement of an existing utility involving negligible expansion of the capacity, and none of the exceptions cited in section 15300.2 are applicable in this case.

I conducted a literature search and surface survey of the alignments and we will be conducting archaeological monitoring at two small locations (at the intersections of Hacienda and Shearer, and at Shearer and Chaney) based on presence of nearby mapped cultural sites. While it is unlikely that intact cultural sites encroach into our project area (none were observed in the right of way during my survey), and haven't been destroyed during street construction, monitoring will ensure there will be no significant impacts to cultural resources.

If you agree with our determination, please sign and return the attached Categorical Exemption. We will file the completed CE with the County Clerk and maintain a record of the project.

Attachments:
Site Map
Categorical Exemption Form

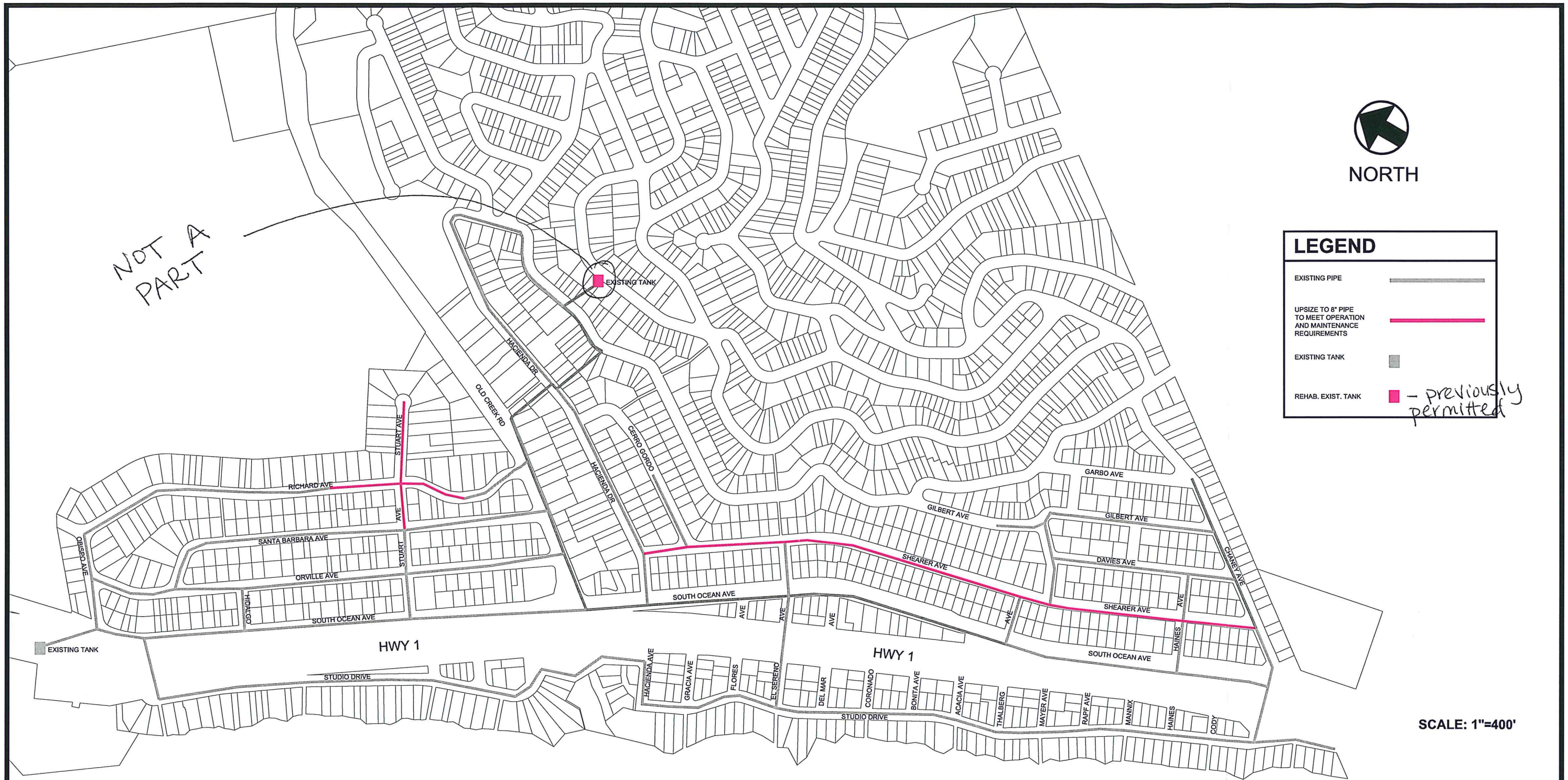

CSA 10A WATER DISTRIBUTION SYSTEM WATERLINE UPGRADES, FOR OPERATION AND MAINTENANCE

CAYUCOS, CALIFORNIA

NOTE:

WATERLINE UPGRADES SHOWN ARE NECESSARY TO UPGRADE FOR OPERATIONAL AND MAINTENANCE REASONS.

SECTION 4

AMENDMENTS TO CALTRANS STANDARD SPECIFICATIONS

AMENDMENTS TO CALTRANS STANDARD SPECIFICATIONS
AMENDMENTS ISSUE DATE: 10-19-12

SECTION 12 CONSTRUCTION AREA TRAFFIC CONTROL DEVICES
(Issued 11-07-08)

In Section 12-1.01 in the 2nd paragraph, replace the 1st sentence with:

Attention is directed to Part 6 of the California MUTCD.

Replace Section 12-2.01 with:

12-2.01 FLAGGERS

Flaggers while on duty and assigned to traffic control or to give warning to the public that the highway is under construction and of any dangerous conditions to be encountered as a result thereof, shall perform their duties and shall be provided with the necessary equipment in conformance with Part 6 of the California MUTCD. The equipment shall be furnished and kept clean and in good repair by the Contractor at the Contractor's expense.

All flaggers shall wear safety apparel meeting the requirements of ANSI/ISEA 107-2004 for Class 2 or 3 garment and complying with 71 Fed Reg 67792.

In Section 12-3.01 replace the 1st paragraph with:

In addition to the requirements in Part 6 of the California MUTCD, all devices used by the Contractor in the performance of the work shall conform to the provisions in this Section 12-3.

In Section 12-3.06 in the 1st paragraph, replace the 2nd sentence with:

Construction area signs are shown in or referred to in Part 6 of the California MUTCD.

In Section 12-3.06 in the 4th paragraph, replace the 1st sentence with:

All construction area signs shall conform to the dimensions, color and legend requirements of the plans, Part 6 of the California MUTCD and these specifications.

In Section 12-3.06 in the 8th paragraph, replace the 1st sentence with:

Used signs with the specified sheeting material will be considered satisfactory if they conform to the requirements for visibility and legibility and the colors conform to the requirements in Part 6 of the California MUTCD.

^^

SECTION 19 EARTHWORK
(Issued 09-16-11)

Replace Section 19-1.02 with:

19-1.02 (BLANK)

Replace Section 19-1.03 with:

19-1.03 GRADE TOLERANCE

Immediately prior to placing subsequent layers of material thereon, the grading plane shall conform to one of the following:

A. When hot mix asphalt is to be placed on the grading plane, the grading plane at any point shall not vary more than 0.05 foot above or below the grade established by the Engineer.
B. When subbase or base material to be placed on the grading plane is to be paid for by the ton, the grading plane at any point shall not vary more than 0.10 foot above or below the grade established by the Engineer.
C. When the material to be placed on the grading plane is to be paid for by the cubic yard, the grading plane at any point shall be not more than 0.05 foot above the grade established by the Engineer.

In Section 19-3.025C replace the 1st paragraph with:

Cementitious material used in soil cement bedding shall conform to the provisions in Section 90-2.01, "Cementitious Materials." Supplementary cementitious material will not be required.

In Section 19-3.025C replace the 4th paragraph with:

The aggregate, cementitious material, and water shall be proportioned either by weight or by volume. Soil cement bedding shall contain not less than 282 pounds of cementitious material per cubic yard. The water content shall be sufficient to produce a fluid, workable mix that will flow and can be pumped without segregation of the aggregate while being placed.

In Section 19-3.06 replace the 9th paragraph with:

Unless otherwise shown on the plans or specified in these specifications or the special provisions, material for structure backfill to be compacted to a relative compaction of not less than 90 percent, except material to be placed behind retaining walls, shall consist of material free of rocks, broken concrete, other solid material exceeding 3 inches in greatest dimension, or organic or other unsatisfactory material.

In Section 19-3.062 replace the 1st paragraph with:

Slurry cement backfill shall consist of a fluid, workable mixture of aggregate, cementitious material, and water.

In Section 19-3.062 replace the 5th paragraph with:

Cementitious material shall conform to the provisions in Section 90-2.01, "Cementitious Materials." Supplementary cementitious material will not be required.

In Section 19-3.062 replace the 8th paragraph with:

The aggregate, cementitious material, and water shall be proportioned either by weight or by volume. Slurry cement backfill shall contain not less than 188 pounds of cementitious material per cubic yard. The water content shall be sufficient to produce a fluid, workable mix that will flow and can be pumped without segregation of the aggregate while being placed.

^^

SECTION 26 AGGREGATE BASES
(Issued 02-16-07)

In Section 26-1.02A replace the 1st paragraph with:

Aggregate must be clean and free from organic matter and other deleterious substances. Aggregate must consist of any combination of:

1. Broken stone
2. Crushed gravel
3. Natural rough surfaced gravel
4. Sand
5. Up to 100 percent of any combination of processed:

    5.1. Asphalt concrete

5.2. Portland cement concrete
5.3. Lean concrete base
5.4. Cement treated base

In Section 26-1.02B replace the 1st paragraph with:

Aggregate must be clean and free from organic matter and other deleterious substances. Aggregate must consist of any combination of:

1. Broken stone
2. Crushed gravel
3. Natural rough surfaced gravel
4. Sand
5. Up to 100 percent of any combination of processed:

   5.1. Asphalt concrete
   5.2. Portland cement concrete
   5.3. Lean concrete base
   5.4. Cement treated base

^^

SECTION 39 ASPHALT CONCRETE
(Issued 10-19-12)

Replace Section 39 with:

SECTION 39 HOT MIX ASPHALT

39-1 GENERAL

39-1.01 DESCRIPTION

Section 39 includes specifications for producing and placing hot mix asphalt (HMA) by mixing aggregate and asphalt binder at a mixing plant and spreading and compacting the HMA mixture.

The special provisions specify one or more types of HMA, including:

1. Type A
2. Type B
3. Open graded friction course (OGFC). OGFC includes hot mix asphalt (open graded)[HMA-O], rubberized hot mix asphalt (open graded) [RHMA-O] and rubberized hot mix asphalt (open graded high binder) [RHMA-O-HB]
4. Rubberized hot mix asphalt (gap graded) [RHMA-G]

The special provisions specify the HMA construction process, including:

1. Standard
2. Method
3. Quality Control / Quality Assurance (QC / QA)

39-1.02 MATERIALS

39-1.02A Geosynthetic Pavement Interlayer

Geosynthetic pavement interlayer must comply with the specifications in Section 88-1.07, "Pavement Interlayer," for the type of interlayer shown on the plans.

39-1.02B Tack Coat

Tack coat must comply with the specifications for asphaltic emulsion in Section 94, "Asphaltic Emulsion," or asphalt binder in Section 92, "Asphalts." Choose the type and grade.

Notify the Engineer if you dilute asphaltic emulsion with water. The weight ratio of added water to asphaltic emulsion must not exceed 1 to 1.

Measure added water either by weight or volume in compliance with the specifications for weighing, measuring, and metering devices under Section 9-1.01, "Measurement of Quantities," or you may use water meters from water districts, cities, or counties. If you measure water by volume, apply a conversion factor to determine the correct weight.

With each dilution, submit in writing:

1. The weight ratio of water to bituminous material in the original asphaltic emulsion
2. The weight of asphaltic emulsion before diluting
3. The weight of added water
4. The final dilution weight ratio of water to asphaltic emulsion

39-1.02C Asphalt Binder

Asphalt binder in HMA must comply with Section 92, "Asphalts," or Section 39-1.02D, "Asphalt Rubber Binder." The special provisions specify the grade.

Asphalt binder for geosynthetic pavement interlayer must comply with Section 92, "Asphalts." Choose from Grades PG 64-10, PG 64-16, or PG 70-10.

39-1.02D Asphalt Rubber Binder

General

Use asphalt rubber binder in RHMA-G, RHMA-O, and RHMA-O-HB. Asphalt rubber binder must be a combination of:

1. Asphalt binder
2. Asphalt modifier
3. Crumb rubber modifier (CRM)

The combined asphalt binder and asphalt modifier must be 80.0 ± 2.0 percent by weight of the asphalt rubber binder.

Asphalt Modifier

Asphalt modifier must be a resinous, high flash point, and aromatic hydrocarbon, and comply with:

Asphalt Modifier for Asphalt Rubber Binder

Quality Characteristic	ASTM	Specification
Viscosity, m^2/s (x 10^{-6}) at 100 °C	D 445	X ± 3 [a]
Flash Point, CL.O.C., °C	D 92	207 minimum
Molecular Analysis		
Asphaltenes, percent by mass	D 2007	0.1 maximum
Aromatics, percent by mass	D 2007	55 minimum

Note:
[a] The symbol "X" is the proposed asphalt modifier viscosity. "X" must be between 19 and 36. A change in "X" requires a new asphalt rubber binder design.

Asphalt modifier must be from 2.0 percent to 6.0 percent by weight of the asphalt binder in the asphalt rubber binder.

Crumb Rubber Modifier

CRM consists of a ground or granulated combination of scrap tire CRM and high natural CRM. CRM must be 75.0 ± 2.0 percent scrap tire CRM and 25.0 ± 2.0 percent high natural CRM by total weight of CRM. Scrap tire CRM must be from any combination of automobile tires, truck tires, or tire buffings.

Sample and test scrap tire CRM and high natural CRM separately. CRM must comply with:

Crumb Rubber Modifier for Asphalt Rubber Binder

Quality Characteristic	Test Method	Specification
Scrap tire CRM gradation (% passing No. 8 sieve)	LP-10	100
High natural CRM gradation (% passing No. 10 sieve)	LP-10	100
Wire in CRM (% max.)	LP-10	0.01
Fabric in CRM (% max.)	LP-10	0.05
CRM particle length (inch max.) [a]	--	3/16
CRM specific gravity [a]	CT 208	1.1 – 1.2
Natural rubber content in high natural CRM (%) [a]	ASTM D 297	40.0 – 48.0

Note:
[a] Test at mix design and for Certificate of Compliance.

Only use CRM ground and granulated at ambient temperature. If steel and fiber are cryogenically separated, it must occur before grinding and granulating. Only use cryogenically produced CRM particles that can be ground or granulated and not pass through the grinder or granulator.

CRM must be dry, free-flowing particles that do not stick together. CRM must not cause foaming when combined with the asphalt binder and asphalt modifier. You may add calcium carbonate or talc up to 3 percent by weight of CRM.

Asphalt Rubber Binder Design and Profile

Submit in writing an asphalt rubber binder design and profile that complies with the asphalt rubber binder specifications. In the design, designate the asphalt, asphalt modifier, and CRM and their proportions. The profile is not a performance specification and only serves to indicate expected trends in asphalt rubber binder properties during binder production. The profile must include the same component sources for the asphalt rubber binder used.

Design the asphalt rubber binder from testing you perform for each quality characteristic and for the reaction temperatures expected during production. The 24-hour (1,440-minute) interaction period determines the design profile. At a minimum, mix asphalt rubber binder components, take samples, and perform and record the following tests:

Asphalt Rubber Binder Reaction Design Profile

Test	Minutes of Reaction [a]							Limits
	45	60	90	120	240	360	1440	
Cone penetration @ 77 °F, 0.10-mm (ASTM D 217)	X [b]				X		X	25 - 70
Resilience @ 77 °F, percent rebound (ASTM D 5329)	X				X		X	18 min.
Field softening point, °F (ASTM D 36)	X				X		X	125 - 165
Viscosity, centipoises (LP-11)	X	X	X	X	X	X	X	1,500 - 4,000

Notes:
[a] Six hours (360 minutes) after CRM addition, reduce the oven temperature to 275 °F for a period of 16 hours. After the 16-hour (1320 minutes) cool-down after CRM addition, reheat the binder to the reaction temperature expected during production for sampling and testing at 24 hours (1440 minutes).
[b] "X" denotes required testing

Asphalt Rubber Binder

After interacting for a minimum of 45 minutes, asphalt rubber binder must comply with:

Asphalt Rubber Binder

Quality Characteristic	Test for Quality Control or Acceptance	Test Method	Specification	
			Minimum	Maximum
Cone penetration @ 77 °F, 0.10-mm	Acceptance	ASTM D 217	25	70
Resilience @ 77 °F, percent rebound	Acceptance	ASTM D 5329	18	--
Field softening point, °F	Acceptance	ASTM D 36	125	165
Viscosity @ 375 °F, centipoises	Quality Control	LP-11	1,500	4,000

39-1.02E Aggregate

Aggregate must be clean and free from deleterious substances. Aggregate:

1. Retained on the No. 4 sieve is coarse
2. Passing the No. 4 sieve is fine
3. Added and passing the No. 30 sieve is supplemental fine, including:

    3.1. Hydrated lime
    3.2. Portland cement
    3.3. Fines from dust collectors

The special provisions specify the aggregate gradation for each HMA type.

The specified aggregate gradation is before the addition of asphalt binder and includes supplemental fines. The Engineer tests for aggregate grading under California Test 202, modified by California Test 105 if there is a difference in specific gravity of 0.2 or more between the coarse and fine parts of different aggregate blends.

Choose a sieve size target value (TV) within each target value limit presented in the aggregate gradation tables.

Aggregate Gradation
(Percentage Passing)
HMA Types A and B

3/4–inch HMA Types A and B

Sieve Sizes	Target Value Limits	Allowable Tolerance
1"	100	—
3/4"	90 - 100	TV ±5
1/2"	70 - 90	TV ±6
No. 4	45 - 55	TV ±7
No. 8	32 - 40	TV ±5
No. 30	12 - 21	TV ±4
No. 200	2 - 7	TV ±2

1/2–inch HMA Types A and B

Sieve Sizes	Target Value Limits	Allowable Tolerance
3/4"	100	—
1/2"	95 - 99	TV ±6
3/8"	75 - 95	TV ±6
No. 4	55 - 66	TV ±7
No. 8	38 - 49	TV ±5
No. 30	15 - 27	TV ±4
No. 200	2 - 8	TV ±2

3/8–inch HMA Types A and B

Sieve Sizes	Target Value Limits	Allowable Tolerance
1/2"	100	—
3/8"	95 - 100	TV ±6
No. 4	58 - 72	TV ±7
No. 8	34 - 48	TV ±6
No. 30	18 - 32	TV ±5
No. 200	2 - 9	TV ±2

No. 4 HMA Types A and B

Sieve Sizes	Target Value Limits	Allowable Tolerance
3/8"	100	—
No. 4	95 - 100	TV ±7
No. 8	72 - 77	TV ±7
No. 30	37 - 43	TV ±7
No. 200	2 - 12	TV ±4

Rubberized Hot Mix Asphalt - Gap Graded (RHMA-G)

3/4–inch RHMA-G

Sieve Sizes	Target Value Limits	Allowable Tolerance
1"	100	—
3/4"	95 - 100	TV ±5
1/2"	83 - 87	TV ±6
3/8"	65 - 70	TV ±6
No. 4	28 - 42	TV ±7
No. 8	14 - 22	TV ±5
No. 200	0 - 6	TV ±2

1/2–inch RHMA-G

Sieve Sizes	Target Value Limits	Allowable Tolerance
3/4"	100	—
1/2"	90 - 100	TV ±6
3/8"	83 - 87	TV ±6
No. 4	28 - 42	TV ±7
No. 8	14 - 22	TV ±5
No. 200	0 - 6	TV ±2

Open Graded Friction Course (OGFC)

1–inch OGFC

Sieve Sizes	Target Value Limits	Allowable Tolerance
1 1/2"	100	—
1"	99 - 100	TV ±5
3/4"	85 - 96	TV ±5
1/2"	55 - 71	TV ±6
No. 4	10 - 25	TV ±7
No. 8	6 - 16	TV ±5
No. 200	1 - 6	TV ±2

1/2–inch OGFC

Sieve Sizes	Target Value Limits	Allowable Tolerance
3/4"	100	—
1/2"	95 - 100	TV ±6
3/8"	78 - 89	TV ±6
No. 4	28 - 37	TV ±7
No. 8	7 - 18	TV ±5
No. 30	0 - 10	TV ±4
No. 200	0 - 3	TV ±2

3/8–inch OGFC

Sieve Sizes	Target Value Limits	Allowable Tolerance
1/2"	100	—
3/8"	90 - 100	TV ±6
No. 4	29 - 36	TV ±7
No. 8	7 - 18	TV ±6
No. 30	0 - 10	TV ±5
No. 200	0 - 3	TV ±2

Before the addition of asphalt binder and lime treatment, aggregate must comply with:

Aggregate Quality

Quality Characteristic	Test Method	HMA Type			
		A	B	RHMA-G	OGFC
Percent of crushed particles	CT 205				
Coarse aggregate (% min.)					
One fractured face		90	25	--	90
Two fractured faces		75	--	90	75
Fine aggregate (% min) (Passing No. 4 sieve and retained on No. 8 sieve.) One fractured face		70	20	70	90
Los Angeles Rattler (% max.)	CT 211				
Loss at 100 Rev.		12	--	12	12
Loss at 500 Rev.		45	50	40	40
Sand equivalent (min.) [a]	CT 217	47	42	47	--
Fine aggregate angularity (% min.) [b]	CT 234	45	45	45	--
Flat and elongated particles (% max. by weight @ 5:1)	CT 235	10	10	10	10

Notes:
[a] Reported value must be the average of 3 tests from a single sample.
[b] The Engineer waives this specification if HMA contains 10 percent or less of nonmanufactured sand by weight of total aggregate. Manufactured sand is fine aggregate produced by crushing rock or gravel.

39-1.02F Reclaimed Asphalt Pavement

You may produce HMA using reclaimed asphalt pavement (RAP). HMA produced using RAP must comply with the specifications for HMA except aggregate quality specifications do not apply to RAP. You may substitute RAP aggregate for a part of the virgin aggregate in HMA in a quantity not exceeding 15.0 percent of the aggregate blend. Do not use RAP in OGFC and RHMA-G.

Assign the substitution rate of RAP aggregate for virgin aggregate with the job mix formula (JMF) submittal. The JMF must include the percent of RAP used. If you change your assigned RAP aggregate substitution rate by more than 5 percent (within the 15.0 percent limit), submit a new JMF.

Process RAP from asphalt concrete. You may process and stockpile RAP throughout the project's life. Prevent material contamination and segregation. Store RAP in stockpiles on smooth surfaces free of debris and organic material. Processed RAP stockpiles must consist only of homogeneous RAP.

39-1.03 HOT MIX ASPHALT MIX DESIGN REQUIREMENTS

39-1.03A General

A mix design consists of performing California Test 367 and laboratory procedures on combinations of aggregate gradations and asphalt binder contents to determine the optimum binder content (OBC) and HMA mixture qualities. If RAP is used, use Laboratory Procedure LP-9. The result of the mix design becomes the proposed JMF.

Use Form CEM-3512 to document aggregate quality and mix design data. Use Form CEM-3511 to present the JMF.

Laboratories testing aggregate qualities and preparing the mix design and JMF must be qualified under the Department's Independent Assurance Program. Take samples under California Test 125.

The Engineer reviews the aggregate qualities, mix design, and JMF and verifies and accepts the JMF.

You may change the JMF during production. Do not use the changed JMF until the Engineer accepts it. Except when adjusting the JMF in compliance with Section 39-1.03E, "Job Mix Formula Verification," perform a new mix design and submit in writing a new JMF submittal for changing any of the following:

1. Target asphalt binder percentage
2. Asphalt binder supplier
3. Asphalt rubber binder supplier
4. Component materials used in asphalt rubber binder or percentage of any component materials
5. Combined aggregate gradation
6. Aggregate sources
7. Substitution rate for RAP aggregate of more than 5 percent

8. Any material in the JMF

For OGFC, submit in writing a complete JMF submittal except asphalt binder content. The Engineer determines the asphalt binder content under California Test 368 within 20 days of your complete JMF submittal and provides you a Form CEM-3513.

39-1.03B Hot Mix Asphalt Mix Design

Perform a mix design that produces HMA in compliance with:

Hot Mix Asphalt Mix Design Requirements

Quality Characteristic	Test Method	HMA Type		
		A	B	RHMA-G
Air voids content (%)	CT 367[a]	4.0	4.0	Special Provisions
Voids in mineral aggregate (% min.)	LP-2			
No. 4 grading		17.0	17.0	--
3/8" grading		15.0	15.0	--
1/2" grading		14.0	14.0	18.0 – 23.0[b]
3/4" grading		13.0	13.0	18.0 – 23.0[b]
Voids filled with asphalt (%)	LP-3			
No. 4 grading		76.0 – 80.0	76.0 – 80.0	Note d
3/8" grading		73.0 – 76.0	73.0 – 76.0	
1/2" grading		65.0 – 75.0	65.0 – 75.0	
3/4" grading		65.0 – 75.0	65.0 – 75.0	
Dust proportion	LP-4			
No. 4 and 3/8" gradings		0.9 – 2.0	0.9 – 2.0	Note d
1/2" and 3/4" gradings		0.6 – 1.3	0.6 – 1.3	
Stabilometer value (min.) [c]	CT 366			
No. 4 and 3/8" gradings		30	30	--
1/2" and 3/4" gradings		37	35	23

Notes:

[a] Calculate the air voids content of each specimen using California Test 309 and Lab Procedure LP-1. Modify California Test 367, Paragraph C5, to use the exact air voids content specified in the selection of OBC.
[b] Voids in mineral aggregate for RHMA-G must be within this range.
[c] Modify California Test 304, Part 2.B.2.c: "After compaction in the compactor, cool to 140 °± 5 °F by allowing the briquettes to cool at room temperature for 0.5-hour, then place the briquettes in the oven at 140 °F for a minimum of 2 hours and not more than 3 hours."
[d] Report this value in the JMF submittal.

For stability and air voids content, prepare 3 briquettes at the OBC and test for compliance. Report the average of 3 tests. Prepare new briquettes and test if the range of stability for the 3 briquettes is more than 8 points. The average air void content may vary from the specified air void content by ±0.5 percent.

You may use the briquettes used for stability testing to determine bulk specific gravity under CT 308. If you use the same briquettes and tests using bulk specific gravity fail, you may prepare 3 new briquettes and determine a new bulk specific gravity.

39-1.03C Job Mix Formula Submittal

Each JMF submittal must consist of:

1. Proposed JMF on Form CEM-3511
2. Mix design documentation on Form CEM-3512 dated within 12 months of submittal
3. JMF verification on Form CEM-3513, if applicable
4. JMF renewal on Form CEM-3514, if applicable
5. Materials Safety Data Sheets (MSDS) for:

   5.1. Asphalt binder

5.2. Base asphalt binder used in asphalt rubber binder
5.3. CRM and asphalt modifier used in asphalt rubber binder
5.4. Blended asphalt rubber binder mixture
5.5. Supplemental fine aggregate except fines from dust collectors
5.6. Antistrip additives

If the Engineer requests in writing, sample the following materials in the presence of the Engineer and place in labeled containers weighing no more than 50 pounds each:

1. Coarse, fine, and supplemental fine aggregate from stockpiles, cold feed belts, or hot bins. Samples must include at least 120 pounds for each coarse aggregate, 80 pounds for each fine aggregate, and 10 pounds for each type of supplemental fines. The Department combines these aggregate samples to comply with the JMF target values submitted on Form CEM-3511.
2. RAP from stockpiles or RAP system. Samples must be at least 60 pounds.
3. Asphalt binder from the binder supplier. Samples must be in two 1-quart cylindrical shaped cans with open top and friction lids.
4. Asphalt rubber binder with the components blended in the proportions to be used. Samples must be in four 1-quart cylindrical shaped cans with open top and friction lids.

Notify the Engineer in writing at least 2 business days before sampling materials. For aggregate and RAP, split the samples into at least 4 parts. Submit 3 parts to the Engineer and use 1 part for your testing.

39-1.03D Job Mix Formula Review

The Engineer reviews each mix design and proposed JMF within 5 business days from the complete JMF submittal. The review consists of reviewing the mix design procedures and comparing the proposed JMF with the specifications.

The Engineer may verify aggregate qualities during this review period.

39-1.03E Job Mix Formula Verification

If you cannot submit a Department-verified JMF on Form CEM-3513 dated within 12 months before HMA production, the Engineer verifies the JMF.

Based on your testing and production experience, you may submit on Form CEM-3511 an adjusted JMF before the Engineer's verification testing. JMF adjustments may include a change in the:

1. Asphalt binder content target value up to ±0.6 percent from the optimum binder content value submitted on Form CEM-3512 except do not adjust the target value for asphalt rubber binder for RHMA-G below 7.0 percent
2. Aggregate gradation target values within the target value limits specified in the aggregate gradation tables

For HMA Type A, Type B, and RHMA-G, the Engineer verifies the JMF from samples taken from HMA produced by the plant to be used. Notify the Engineer in writing at least 2 business days before sampling materials.

In the Engineer's presence and from the same production run, take samples of:

1. Aggregate
2. Asphalt binder
3. RAP
4. HMA

Sample aggregate from cold feed belts or hot bins. Sample RAP from the RAP system. Sample HMA under California Test 125 except if you request in writing and the Engineer approves, you may sample from any of the following locations:

1. The plant
2. A truck
3. A windrow
4. The paver hopper
5. The mat behind the paver

You may sample from a different project including a non-Department project if you make arrangements for the Engineer to be present during sampling.

For aggregate, RAP, and HMA, split the samples into at least 4 parts and label their containers. Submit 3 split parts to the Engineer and use 1 part for your testing.

The Engineer verifies each proposed JMF within 20 days of receiving all verification samples and the JMF submittal has been accepted. If you request in writing, the Engineer verifies RHMA-G quality requirements within 3 business days of sampling. Verification is testing for compliance with the specifications for:

1. Aggregate quality
2. Aggregate gradation (JMF TV ± tolerance)
3. Asphalt binder content (JMF TV ± tolerance)
4. HMA quality specified in the table Hot Mix Asphalt Mix Design Requirements except:

    4.1. Air voids content (design value ± 2.0 percent)
    4.2. Voids filled with asphalt (report only if an adjustment for asphalt binder content target value is less than or equal to ± 0.3 percent from OBC)
    4.3. Dust proportion (report only if an adjustment for asphalt binder content target value is less than or equal to ± 0.3 percent from OBC)

The Engineer prepares 3 briquettes from a single split sample. To verify the JMF for stability and air voids content, the Engineer tests the 3 briquettes and reports the average of 3 tests. The Engineer prepares new briquettes if the range of stability for the 3 briquettes is more than 8 points.

The Engineer may use the briquettes used for stability testing to determine bulk specific gravity under CT 308. If the Engineer uses the same briquettes and the tests using bulk specific gravity fail, the Engineer prepares 3 new briquettes and determines a new bulk specific gravity.

If the Engineer verifies the JMF, the Engineer provides you a Form CEM-3513.

If the Engineer's tests on plant-produced samples do not verify the JMF, the Engineer notifies you in writing and you must submit a new JMF submittal or submit an adjusted JMF based on your testing. JMF adjustments may include a change in the:

1. Asphalt binder content target value up to ±0.6 percent from the optimum binder content value submitted on Form CEM-3512 except do not adjust the target value for asphalt rubber binder for RHMA-G below 7.0 percent
2. Aggregate gradation target values within the target value limits specified in the aggregate gradation tables

You may adjust the JMF only once due to a failed verification test. An adjusted JMF requires a new Form CEM-3511 and verification of a plant-produced sample.

A verified JMF is valid for 12 months.

For each HMA type and aggregate size specified, the Engineer verifies at the State's expense up to 2 proposed JMF including a JMF adjusted after verification failure. The Engineer deducts $3,000 from payments for each verification exceeding this limit. This deduction does not apply to verifications initiated by the Engineer or JMF renewal.

39-1.03F Job Mix Formula Renewal

You may request a JMF renewal by submitting the following:

1. Proposed JMF on Form CEM-3511
2. A previously verified JMF documented on Form CEM-3513 dated within 12 months
3. Mix design documentation on Form CEM-3512 used for the previously verified JMF

If the Engineer requests in writing, sample the following materials in the presence of the Engineer and place in labeled containers weighing no more than 50 pounds each:

1. Coarse, fine, and supplemental fine aggregate from stockpiles, cold feed belts, or hot bins. Samples must include at least 120 pounds for each coarse aggregate, 80 pounds for each fine aggregate, and 10 pounds for

each type of supplemental fines. The Department combines these aggregate samples to comply with the JMF target values submitted on Form CEM-3511.

2. RAP from stockpiles or RAP system. Samples must be at least 60 pounds.
3. Asphalt binder from the binder supplier. Samples must be in two 1-quart cylindrical shaped cans with open top and friction lids.
4. Asphalt rubber binder with the components blended in the proportions to be used. Samples must be in four 1-quart cylindrical shaped cans with open top and friction lids.

Notify the Engineer in writing at least 2 business days before sampling materials. For aggregate and RAP, split samples into at least 4 parts. Submit 3 parts to the Engineer and use 1 part for your testing.

The Engineer may verify aggregate qualities during this review period.

Notify the Engineer in writing at least 2 business days before sampling materials. For aggregate, RAP, and HMA, split the samples into at least 4 parts. Submit 3 parts to the Engineer and use 1 part for your testing.

The Engineer verifies the JMF renewal submittal under Section 39-1.03E, "Job Mix Formula Verification," except:

1. The Engineer retains samples until you provide test results for your part on Form CEM-3514.
2. The Engineer tests samples of materials obtained from the HMA production unit after you submit test results that comply with the specifications for the quality characteristics under Section 39-1.03E, "Job Mix Formula Verification."
3. The Engineer verifies each proposed JMF renewal within 20 days of receiving verification samples.
4. You may not adjust the JMF due to a failed verification.
5. For each HMA type and aggregate gradation specified, the Engineer verifies at the State's expense 1 proposed JMF renewal within a 12-month period.

The most recent aggregate quality test results within the past 12 months may be used for verification of JMF renewal or the Engineer may perform aggregate quality tests for verification of JMF renewal.

If the Engineer verifies the JMF renewal, the Engineer provides you a Form CEM-3513.

39-1.03G Job Mix Formula Modification

For an accepted JMF, you may change binder source one time during production.

Submit your modified JMF request a minimum of 3 business days before production. Each modified JMF submittal must consist of:

1. Proposed modified JMF on Form CEM-3511.
2. Mix design records on Form CEM-3512 for the accepted JMF to be modified.
3. JMF verification on Form CEM-3513 for the accepted JMF to be modified.
4. Quality characteristics test results for the modified JMF as specified in section 39-1.03B. Perform tests at the mix design OBC as shown on Form CEM-3512.
5. If required, California Test 371 test results for the modified JMF.

With an accepted modified JMF submittal, the Engineer verifies each modified JMF within 5 business days of receiving all verification samples. If California Test 371 is required, the Engineer tests for California Test 371 within 10 days of receiving verification samples.

The Engineer verifies the modified JMF after the modified JMF HMA is placed on the project and verification samples are taken within the first 750 tons following sampling requirements in Section 39-1.03E, "Job Mix Formula Verification." The Engineer tests verification samples for compliance with:

1. Stability as shown in the table titled "Hot Mix Asphalt Mix Design Requirements"
2. Air void content at design value ±2.0 percent
3. Voids in mineral aggregate as shown in the table titled "Hot Mix Asphalt Mix Design Requirements"
4. Voids filled with asphalt if an adjustment for asphalt binder content TV is more than ±0.3 percent from the original OBC shown on Form CEM-3512.
5. Dust proportion if an adjustment for asphalt binder content TV is more than ±0.3 percent from OBC shown on Form CEM-3512.

If the modified JMF is verified, the Engineer revises your Form CEM-3513 to include the new binder source. Your revised Form CEM-3513 will have the same expiration date as the original Form CEM-3513 for the accepted JMF that is modified.

If a modified JMF is not verified, stop production and any HMA placed using the modified JMF is rejected.

The Engineer deducts $2,000 from payments for each modified JMF verification. The Engineer deducts an additional $2,000 from payments for each modified JMF verification that requires California Test 371.

39-1.03H Job Mix Formula Acceptance

You may start HMA production if:

1. The Engineer's review of the JMF shows compliance with the specifications.
2. The Department has verified the JMF within 12 months before HMA production.
3. The Engineer accepts the verified JMF.

39-1.04 CONTRACTOR QUALITY CONTROL

39-1.04A General

Establish, maintain, and change a quality control system to ensure materials and work comply with the specifications. Submit quality control test results to the Engineer within 3 business days of a request except when QC / QA is specified.

You must identify the HMA sampling location in your Quality Control Plan. During production, take samples under California Test 125. You may sample HMA from:

1. The plant
2. The truck
3. A windrow
4. The paver hopper
5. The mat behind the paver

39-1.04B Prepaving Conference

Meet with the Engineer at a prepaving conference at a mutually agreed time and place. Discuss methods of performing the production and paving work.

39-1.04C Asphalt Rubber Binder

Take asphalt rubber binder samples from the feed line connecting the asphalt rubber binder tank to the HMA plant. Sample and test asphalt rubber binder under Laboratory Procedure LP-11.

Test asphalt rubber binder for compliance with the viscosity specifications in Section 39-1.02, "Materials." During asphalt rubber binder production and HMA production using asphalt rubber binder, measure viscosity every hour with not less than 1 reading for each asphalt rubber binder batch. Log measurements with corresponding time and asphalt rubber binder temperature. Submit the log daily in writing.

Submit a Certificate of Compliance under Section 6-1.07, "Certificates of Compliance." With the Certificate of Compliance, submit test results in writing for CRM and asphalt modifier with each truckload delivered to the HMA plant. A Certificate of Compliance for asphalt modifier must not represent more than 5,000 pounds. Use an AASHTO-certified laboratory for testing.

Sample and test gradation and wire and fabric content of CRM once per 10,000 pounds of scrap tire CRM and once per 3,400 pounds of high natural CRM. Sample and test scrap tire CRM and high natural CRM separately.

Submit certified weight slips in writing for the CRM and asphalt modifier furnished.

39-1.04D Aggregate

Determine the aggregate moisture content and RAP moisture content in continuous mixing plants at least twice a day during production and adjust the plant controller. Determine the RAP moisture content in batch mixing plants at least twice a day during production and adjust the plant controller.

39-1.04E Reclaimed Asphalt Pavement

Perform RAP quality control testing each day.

Sample RAP once daily and determine the RAP aggregate gradation under Laboratory Procedure LP-9 and submit the results to the Engineer in writing with the combined aggregate gradation.

39-1.04F Density Cores

To determine density for Standard and QC / QA projects, take 4-inch or 6-inch diameter density cores at least once every 5 business days. Take 1 density core for every 250 tons of HMA from random locations the Engineer designates. Take density cores in the Engineer's presence and backfill and compact holes with material authorized by the Engineer. Before submitting a density core to the Engineer, mark it with the density core's location and place it in a protective container.

If a density core is damaged, replace it with a density core taken within 1 foot longitudinally from the original density core. Relocate any density core located within 1 foot of a rumble strip to 1 foot transversely away from the rumble strip.

39-1.04G Briquettes

Prepare 3 briquettes for each stability and air voids content determination. Report the average of 3 tests. Prepare new briquettes and test if the range of stability for the 3 briquettes is more than 12 points.

You may use the briquettes used for stability testing to determine bulk specific gravity under CT 308. If you use these briquettes and tests using bulk specific gravity fail, you may prepare 3 new briquettes and determine a new bulk specific gravity.

39-1.05 ENGINEER'S ACCEPTANCE

The Engineer's acceptance of HMA is specified in the sections for each HMA construction process.

The Engineer samples materials for testing under California Test 125 and the applicable test method except samples may be taken from:

1. The plant from:

    1.1. A truck
    1.2. An automatic sampling device

2. The mat behind the paver

Sampling must be independent of Contractor quality control, statistically-based, and random.

If you request, the Engineer splits samples and provides you with a part.

The Engineer accepts HMA based on:

1. Accepted JMF
2. Accepted QCP for Standard and QC / QA
3. Compliance with the HMA Acceptance tables
4. Acceptance of a lot for QC / QA
5. Visual inspection

The Engineer prepares 3 briquettes for each stability and air voids content determination. The Engineer reports the average of 3 tests. The Engineer prepares new briquettes and test if the range of stability for the 3 briquettes is more than 8 points.

The Engineer may use the briquettes used for stability testing to determine bulk specific gravity under CT 308. If the Engineer uses the same briquettes and the tests using bulk specific gravity fail, the Engineer prepares 3 new briquettes and determines a new bulk specific gravity.

39-1.06 DISPUTE RESOLUTION

You and the Engineer must work together to avoid potential conflicts and to resolve disputes regarding test result discrepancies. Notify the Engineer in writing within 5 business days of receiving a test result if you dispute the test result.

If you or the Engineer dispute each other's test results, submit written quality control test results and copies of paperwork including worksheets used to determine the disputed test results to the Engineer. An Independent Third Party (ITP) performs referee testing. Before the ITP participates in a dispute resolution, the ITP must be accredited under the Department's Independent Assurance Program. The ITP must be independent of the project. By mutual agreement, the ITP is chosen from:

1. A Department laboratory
2. A Department laboratory in a district or region not in the district or region the project is located
3. The Transportation Laboratory
4. A laboratory not currently employed by you or your HMA producer

If split quality control or acceptance samples are not available, the ITP uses any available material representing the disputed HMA for evaluation.

39-1.07 PRODUCTION START-UP EVALUATION

The Engineer evaluates HMA production and placement at production start-up.

Within the first 750 tons produced on the first day of HMA production, in the Engineer's presence and from the same production run, take samples of:

1. Aggregate
2. Asphalt binder
3. RAP
4. HMA

Sample aggregate from cold feed belts or hot bins. Take RAP samples from the RAP system. Sample HMA under California Test 125 except if you request in writing and the Engineer approves, you may sample HMA from:

1. The plant
2. The truck
3. A windrow
4. The paver hopper
5. The mat behind the paver

For aggregate, RAP, and HMA, split the samples into at least 4 parts and label their containers. Submit 3 split parts to the Engineer and keep 1 part.

For Standard and QC / QA projects, you and the Engineer must test the split samples and report test results in writing within 3 business days of sampling. If you proceed before receipt of the test results, the Engineer may consider the HMA placed to be represented by these test results.

For Standard and QC / QA projects, take 4-inch or 6-inch diameter density cores within the first 750 tons on the first day of HMA production. For each density core, the Engineer reports the bulk specific gravity determined under California Test 308, Method A in addition to the percent of maximum theoretical density. You may test for in-place density at the density core locations and include them in your production tests for percent of maximum theoretical density.

39-1.08 PRODUCTION

39-1.08A General

Produce HMA in a batch mixing plant or a continuous mixing plant. Proportion aggregate by hot or cold feed control.

HMA plants must be Department-qualified. Before production, the HMA plant must have a current qualification under the Department's Materials Plant Quality Program.

During production, you may adjust:

1. Hot or cold feed proportion controls for virgin aggregate and RAP
2. The set point for asphalt binder content

39-1.08B Mixing

Mix HMA ingredients into a homogeneous mixture of coated aggregates.

Asphalt binder must be between 275 °F and 375 °F when mixed with aggregate.

Asphalt rubber binder must be between 375 °F and 425 °F when mixed with aggregate.

When mixed with asphalt binder, aggregate must not be more than 325 °F except aggregate for OGFC with unmodified asphalt binder must be not more than 275 °F. Aggregate temperature specifications do not apply when you use RAP.

HMA with or without RAP must not be more than 325 °F.

39-1.08C Asphalt Rubber Binder

Deliver scrap tire CRM and high natural CRM in separate bags.

Either proportion and mix asphalt binder, asphalt modifier, and CRM simultaneously or premix the asphalt binder and asphalt modifier before adding CRM. If you premix asphalt binder and asphalt modifier, asphalt binder must be from 375 to 425 degrees F when you add the asphalt modifier. Mix them for at least 20 minutes. When you add CRM, the asphalt binder and asphalt modifier must be between 375 °F and 425 °F.

Do not use asphalt rubber binder during the first 45 minutes of the reaction period. During this period, the asphalt rubber binder mixture must be between 375 °F and the lower of 425 °F or 25 °F below the asphalt binder's flash point indicated in the MSDS.

If any asphalt rubber binder is not used within 4 hours after the reaction period, discontinue heating. If the asphalt rubber binder drops below 375 °F, reheat before use. If you add more scrap tire CRM to the reheated asphalt rubber binder, the binder must undergo a 45-minute reaction period. The added scrap tire CRM must not exceed 10 percent of the total asphalt rubber binder weight. Reheated and reacted asphalt rubber binder must comply with the viscosity specifications for asphalt rubber binder in Section 39-1.02, "Materials." Do not reheat asphalt rubber binder more than twice.

39-1.09 SUBGRADE, TACK COAT, AND GEOSYNTHETIC PAVEMENT INTERLAYER

39-1.09A General

Prepare subgrade or apply tack coat to surfaces receiving HMA. If specified, place geosynthetic pavement interlayer over a coat of asphalt binder.

39-1.09B Subgrade

Subgrade to receive HMA must comply with the compaction and elevation tolerance specifications in the sections for the material involved. Subgrade must be free of loose and extraneous material. If HMA is paved on existing base or pavement, remove loose paving particles, dirt, and other extraneous material by any means including flushing and sweeping.

39-1.09C Tack Coat

Apply tack coat:

1. To existing pavement including planed surfaces
2. Between HMA layers
3. To vertical surfaces of:

    3.1. Curbs
    3.2. Gutters
    3.3. Construction joints

Before placing HMA, apply tack coat in 1 application at the minimum residual rate specified for the condition of the underlying surface:

Tack Coat Application Rates for HMA Type A, Type B, and RHMA-G

HMA over:	Minimum Residual Rates (gallons per square yard)		
	CSS1/CSS1h, SS1/SS1h and QS1h/CQS1h Asphaltic Emulsion	CRS1/CRS2, RS1/RS2 and QS1/CQS1 Asphaltic Emulsion	Asphalt Binder and PMRS2/PMCRS2 and PMRS2h/PMCRS2h Asphaltic Emulsion
New HMA (between layers)	0.02	0.03	0.02
PCC and existing HMA (AC) surfaces	0.03	0.04	0.03
Planed PCC and HMA (AC) surfaces	0.05	0.06	0.04

Tack Coat Application Rates for OGFC

OGFC over:	Minimum Residual Rates (gallons per square yard)		
	CSS1/CSS1h, SS1/SS1h and QS1h/CQS1h Asphaltic Emulsion	CRS1/CRS2, RS1/RS2 and QS1/CQS1 Asphaltic Emulsion	Asphalt Binder and PMRS2/PMCRS2 and PMRS2h/PMCRS2h Asphaltic Emulsion
New HMA	0.03	0.04	0.03
PCC and existing HMA (AC) surfaces	0.05	0.06	0.04
Planed PCC and HMA (AC) surfaces	0.06	0.07	0.05

If you dilute asphaltic emulsion, mix until homogeneous before application.

Apply to vertical surfaces with a residual tack coat rate that will thoroughly coat the vertical face without running off.

If you request in writing and the Engineer authorizes, you may:

1. Change tack coat rates
2. Omit tack coat between layers of new HMA during the same work shift if:

    2.1. No dust, dirt, or extraneous material is present
    2.2. The surface is at least 140 °F

Immediately in advance of placing HMA, apply additional tack coat to damaged areas or where loose or extraneous material is removed.

Close areas receiving tack coat to traffic. Do not track tack coat onto pavement surfaces beyond the job site.

Asphalt binder tack coat must be between 285 °F and 350 °F when applied.

39-1.09D Geosynthetic Pavement Interlayer

Place geosynthetic pavement interlayer in compliance with the manufacturer's recommendations.

Before placing the geosynthetic pavement interlayer and asphalt binder:

1. Repair cracks 1/4 inch and wider, spalls, and holes in the pavement. The State pays for this repair work under Section 4-1.03D, "Extra Work."
2. Clean the pavement of loose and extraneous material.

Immediately before placing the interlayer, apply 0.25 gallon ± 0.03 gallon of asphalt binder per square yard of interlayer or until the fabric is saturated. Apply asphalt binder the width of the geosynthetic pavement interlayer plus 3 inches on each side. At interlayer overlaps, apply asphalt binder on the lower interlayer the same overlap distance as the upper interlayer.

Asphalt binder must be from 285 °F to 350 °F and below the minimum melting point of the geosynthetic pavement interlayer when applied.

Align and place the interlayer with no overlapping wrinkles, except a wrinkle that overlaps may remain if it is less than 1/2 inch thick. If the overlapping wrinkle is more than 1/2 inch thick, cut the wrinkle out and overlap the interlayer no more than 2 inches.

The minimum HMA thickness over the interlayer must be 0.12 foot thick including conform tapers. Do not place the interlayer on a wet or frozen surface.

Overlap the interlayer borders between 2 inches and 4 inches. In the direction of paving, overlap the following roll with the preceding roll at any break.

You may use rolling equipment to correct distortions or wrinkles in the interlayer.

If asphalt binder tracked onto the interlayer or brought to the surface by construction equipment causes interlayer displacement, cover it with a small quantity of HMA.

Before placing HMA on the interlayer, do not expose the interlayer to:

1. Traffic except for crossings under traffic control and only after you place a small HMA quantity
2. Sharp turns from construction equipment

3. Damaging elements

Pave HMA on the interlayer during the same work shift.

39-1.10 SPREADING AND COMPACTING EQUIPMENT

Paving equipment for spreading must be:

1. Self-propelled
2. Mechanical
3. Equipped with a screed or strike-off assembly that can distribute HMA the full width of a traffic lane
4. Equipped with a full-width compacting device
5. Equipped with automatic screed controls and sensing devices that control the thickness, longitudinal grade, and transverse screed slope

Install and maintain grade and slope references.

The screed must produce a uniform HMA surface texture without tearing, shoving, or gouging.

The paver must not leave marks such as ridges and indentations unless you can eliminate them by rolling.

Rollers must be equipped with a system that prevents HMA from sticking to the wheels. You may use a parting agent that does not damage the HMA or impede the bonding of layers.

In areas inaccessible to spreading and compacting equipment:

1. Spread the HMA by any means to obtain the specified lines, grades and cross sections.
2. Use a pneumatic tamper, plate compactor, or equivalent to achieve thorough compaction.

39-1.11 TRANSPORTING, SPREADING, AND COMPACTING

Do not pave HMA on a wet pavement or frozen surface.

You may deposit HMA in a windrow and load it in the paver if:

1. Paver is equipped with a hopper that automatically feeds the screed
2. Loading equipment can pick up the windrowed material and deposit it in the paver hopper without damaging base material
3. Activities for deposit, pick-up, loading, and paving are continuous
4. HMA temperature in the windrow does not fall below 260 °F

You may pave HMA in 1 or more layers on areas less than 5 feet wide and outside the traveled way including shoulders. You may use mechanical equipment other than a paver for these areas. The equipment must produce a uniform smoothness and texture.

HMA handled, spread, or windrowed must not stain the finished surface of any improvement including pavement.

Do not use petroleum products such as kerosene or diesel fuel to release HMA from trucks, spreaders, or compactors.

HMA must be free of:

1. Segregation
2. Coarse or fine aggregate pockets
3. Hardened lumps

Longitudinal joints in the top layer must match specified lane edges. Alternate longitudinal joint offsets in lower layers at least 0.5 foot from each side of the specified lane edges. You may request in writing other longitudinal joint placement patterns.

Until the adjoining through lane's top layer has been paved, do not pave the top layer of:

1. Shoulders
2. Tapers
3. Transitions
4. Road connections
5. Driveways

6. Curve widenings
7. Chain control lanes
8. Turnouts
9. Turn pockets

If the number of lanes change, pave each through lane's top layer before paving a tapering lane's top layer. Simultaneous to paving a through lane's top layer, you may pave an adjoining area's top layer including shoulders. Do not operate spreading equipment on any area's top layer until completing final compaction.

If HMA (leveling) is specified, fill and level irregularities and ruts with HMA before spreading HMA over base, existing surfaces, or bridge decks. You may use mechanical equipment other than a paver for these areas. The equipment must produce a uniform smoothness and texture. HMA used to change an existing surface's cross slope or profile is not HMA (leveling).

If placing HMA against the edge of existing pavement, sawcut or grind the pavement straight and vertical along the joint and remove extraneous material without damaging the surface remaining in place. If placing HMA against the edge of a longitudinal or transverse construction joint and the joint is damaged or not placed to a neat line, sawcut or grind the pavement straight and vertical along the joint and remove extraneous material without damaging the surface remaining in place. Repair or remove and replace damaged pavement at your expense.

Rolling must leave the completed surface compacted and smooth without tearing, cracking, or shoving. Complete finish rolling activities before the pavement surface temperature is:

1. Below 150 °F for HMA with unmodified binder
2. Below 140 °F for HMA with modified binder
3. Below 200 °F for RHMA-G

If a vibratory roller is used as a finish roller, turn the vibrator off.

Do not use a pneumatic tired roller to compact RHMA-G.

For Standard and QC/QA, if a 3/4-inch aggregate grading is specified, you may use a 1/2-inch aggregate grading if the specified total paved thickness is at least 0.15 foot and less than 0.20 foot thick.

Spread and compact HMA under Section 39-3.03, "Spreading and Compacting Equipment," and Section 39-3.04, "Transporting, Spreading, and Compacting," for any of the following:

1. Specified paved thickness is less than 0.15 foot.
2. Specified paved thickness is less than 0.20 foot and a 3/4-inch aggregate grading is specified and used.
3. You spread and compact at:

    3.1. Asphalt concrete surfacing replacement areas
    3.2. Leveling courses
    3.3. Areas the Engineer determines conventional compaction and compaction measurement methods are impeded

Do not open new HMA pavement to public traffic until its mid-depth temperature is below 160 °F.

If you request in writing and the Engineer authorizes, you may cool HMA Type A and Type B with water when rolling activities are complete. Apply water under Section 17, "Watering."

Spread sand at a rate between 1 pound and 2 pounds per square yard on new RHMA-G, RHMA-O, and RHMA-O-HB pavement when finish rolling is complete. Sand must be free of clay or organic matter. Sand must comply with Section 90-3.03, "Fine Aggregate Grading." Keep traffic off the pavement until spreading sand is complete.

39-1.12 SMOOTHNESS

39-1.12A General

Determine HMA smoothness with a profilograph and a straightedge.

Smoothness specifications do not apply to OGFC placed on existing pavement not constructed under the same project.

If portland cement concrete is placed on HMA:

1. Cold plane the HMA finished surface to within specified tolerances if it is higher than the grade specified by the Engineer.

2. Remove and replace HMA if the finished surface is lower than 0.05 foot below the grade specified by the Engineer.

39-1.12B Straightedge

The HMA pavement top layer must not vary from the lower edge of a 12-foot long straightedge:

1. More than 0.01 foot when the straight edge is laid parallel with the centerline
2. More than 0.02 foot when the straightedge is laid perpendicular to the centerline and extends from edge to edge of a traffic lane
3. More than 0.02 foot when the straightedge is laid within 24 feet of a pavement conform

39-1.12C Profilograph

Under California Test 526, determine the zero (null) blanking band Profile Index (PI_0) and must-grinds on the top layer of HMA Type A, Type B, and RHMA-G pavement. Take 2 profiles within each traffic lane, 3 feet from and parallel with the edge of each lane.

A must-grind is a deviation of 0.3 inch or more in a length of 25 feet. You must correct must-grinds.

For OGFC, only determine must-grinds when placed over HMA constructed under the same project. The top layer of the underlying HMA must comply with the smoothness specifications before placing OGFC.

Profile pavement in the Engineer's presence. Choose the time of profiling.

On tangents and horizontal curves with a centerline radius of curvature 2,000 feet or more, the PI_0 must be at most 2.5 inches per 0.1-mile section.

On horizontal curves with a centerline radius of curvature between 1,000 feet and 2,000 feet including pavement within the superelevation transitions, the PI_0 must be at most 5 inches per 0.1-mile section.

Before the Engineer accepts HMA pavement for smoothness, submit written final profilograms.

Submit 1 electronic copy of profile information in Microsoft Excel and 1 electronic copy of longitudinal pavement profiles in ".erd" format or other ProVAL compatible format to the Engineer and to:

Smoothness@dot.ca.gov

The following HMA pavement areas do not require a PI_0. You must measure these areas with a 12-foot straightedge and determine must-grinds with a profilograph:

1. New HMA with a total thickness less than 0.25 foot
2. HMA sections of city or county streets and roads, turn lanes and collector lanes that are less than 1,500 feet in length

The following HMA pavement areas do not require a PI_0. You must measure these areas with a 12-foot straightedge:

1. Horizontal curves with a centerline radius of curvature less than 1,000 feet including pavement within the superelevation transitions of those curves
2. Within 12 feet of a transverse joint separating the pavement from:

    2.1. Existing pavement not constructed under the same project
    2.2. A bridge deck or approach slab

3. Exit ramp termini, truck weigh stations, and weigh-in-motion areas
4. If steep grades and superelevation rates greater than 6 percent are present on:

    4.1. Ramps
    4.2. Connectors

5. Turn lanes
6. Areas within 15 feet of manholes or drainage transitions
7. Acceleration and deceleration lanes for at-grade intersections
8. Shoulders and miscellaneous areas

9. HMA pavement within 3 feet from and parallel to the construction joints formed between curbs, gutters, or existing pavement

39-1.12D Smoothness Correction

If the top layer of HMA Type A, Type B, or RHMA-G pavement does not comply with the smoothness specifications, grind the pavement to within tolerances, remove and replace it, or place a layer of HMA. The Engineer must authorize your choice of correction before the work begins.

Remove and replace the areas of OGFC not in compliance with the must-grind and straightedge specifications, except you may grind OGFC for correcting smoothness:

1. At a transverse joint separating the pavement from pavement not constructed under the same project
2. Within 12 feet of a transverse joint separating the pavement from a bridge deck or approach slab

Corrected HMA pavement areas must be uniform rectangles with edges:

1. Parallel to the nearest HMA pavement edge or lane line
2. Perpendicular to the pavement centerline

Measure the corrected HMA pavement surface with a profilograph and a 12-foot straightedge and correct the pavement to within specified tolerances. If a must-grind area or straightedged pavement cannot be corrected to within specified tolerances, remove and replace the pavement.

On ground areas not overlaid with OGFC, apply fog seal coat under Section 37-1, "Seal Coats."

39-1.13 MISCELLANEOUS AREAS AND DIKES

Miscellaneous areas are outside the traveled way and include:

1. Median areas not including inside shoulders
2. Island areas
3. Sidewalks
4. Gutters
5. Gutter flares
6. Ditches
7. Overside drains
8. Aprons at the ends of drainage structures

Spread miscellaneous areas in 1 layer and compact to the specified lines and grades.

For miscellaneous areas and dikes:

1. Do not submit a JMF.
2. Choose the 3/8-inch or 1/2-inch HMA Type A and Type B aggregate gradations.
3. Minimum asphalt binder content must be 6.8 percent for 3/8-inch aggregate and 6.0 percent for 1/2-inch aggregate. If you request in writing and the Engineer authorizes, you may reduce the minimum asphalt binder content.
4. Choose asphalt binder Grade PG 70-10 or the same grade specified for HMA.

39-2 STANDARD

39-2.01 DESCRIPTION

If HMA is specified as Standard, construct it under Section 39-1, "General," this Section 39-2, "Standard," and Section 39-5, "Measurement and Payment."

39-2.02 CONTRACTOR QUALITY CONTROL

39-2.02A Quality Control Plan

Establish, implement, and maintain a Quality Control Plan (QCP) for HMA. The QCP must describe the organization and procedures you will use to:

1. Control the quality characteristics

2. Determine when corrective actions are needed (action limits)
3. Implement corrective actions

When you submit the proposed JMF, submit the written QCP. You and the Engineer must discuss the QCP during the prepaving conference.

The QCP must address the elements affecting HMA quality including:

1. Aggregate
2. Asphalt binder
3. Additives
4. Production
5. Paving

The Engineer reviews each QCP within 5 business days from the submittal. Hold HMA production until the Engineer accepts the QCP in writing. The Engineer's QCP acceptance does not mean your compliance with the QCP will result in acceptable HMA. Section 39-1.05, "Engineer's Acceptance," specifies HMA acceptance.

39-2.02B Quality Control Testing

Perform sampling and testing at the specified frequency for the following quality characteristics:

Minimum Quality Control – Standard

Quality Characteristic	Test Method	Minimum Sampling and Testing Frequency	HMA Type			
			A	B	RHMA-G	OGFC
Aggregate gradation[a]	CT 202	1 per 750 tons and any remaining part at the end of the project	JMF ± Tolerance[b]	JMF ± Tolerance[b]	JMF ± Tolerance[b]	JMF ± Tolerance[b]
Sand equivalent (min.)[c]	CT 217		47	42	47	--
Asphalt binder content (%)	CT 379 or 382		JMF ± 0.45	JMF ± 0.45	JMF ± 0.50	JMF ± 0.50
HMA moisture content (%, max.)	CT 226 or CT 370	1 per 2,500 tons but not less than 1 per paving day	1.0	1.0	1.0	1.0
Field compaction, (%, max. theoretical density)[d,e]	Quality control plan	2 per business day (min.)	91 - 97	91 - 97	91 - 97	--
Stabilometer value (min.)[c, f]	CT 366	One per 4,000 tons or 2 per 5 business days, which-ever is more				
No. 4 and 3/8" gradings			30	30	--	--
1/2" and 3/4" gradings			37	35	23	--
Air voids content (%)[c, g]	CT 367		4 ± 2	4 ± 2	Specification ± 2	--
Aggregate moisture content at continuous mixing plants and RAP moisture content at continuous mixing plants and batch mixing plants[h]	CT 226 or CT 370	2 per day during production	--	--	--	--
Percent of crushed particles coarse aggregate (%, min.)	CT 205	As necessary and designat-ed in the QCP. At least once per project				
One fractured face			90	25	--	90
Two fractured faces			75	--	90	75
Fine aggregate (%, min) (Passing No. 4 sieve and retained on No. 8 sieve.) One fractured face			70	20	70	90
Los Angeles Rattler (%, max.)	CT 211					
Loss at 100 rev.			12	--	12	12
Loss at 500 rev.			45	50	40	40

Flat and elongated particles (%, max. by weight @ 5:1)	CT 235		Report only	Report only	Report only	Report only
Fine aggregate angularity (%, min.)[i]	CT 234		45	45	45	--
Voids filled with asphalt (%)[j] No. 4 grading 3/8" grading 1/2" grading 3/4" grading	LP-3		 76.0 – 80.0 73.0 – 76.0 65.0 – 75.0 65.0 – 75.0	 76.0 – 80.0 73.0 – 76.0 65.0 – 75.0 65.0 – 75.0	Report only	--
Voids in mineral aggregate (% min.)[j] No. 4 grading 3/8" grading 1/2" grading 3/4" grading	LP-2		 17.0 15.0 14.0 13.0	 17.0 15.0 14.0 13.0	 -- -- 18.0 – 23.0 [k] 18.0 – 23.0 [k]	--
Dust proportion[j] No. 4 and 3/8" gradings 1/2" and 3/4" gradings	LP-4		 0.9 – 2.0 0.6 – 1.3	 0.9 – 2.0 0.6 – 1.3	Report only	--
Smoothness	Section 39-1.12	--	12-foot straightedge, must-grind, and PI_0	12-foot straightedge, must-grind, and PI_0	12-foot straightedge, must-grind, and PI_0	12-foot straightedge and must-grind
Asphalt rubber binder viscosity @ 375 °F, centipoises	Section 39-1.02D	Section 39-1.04C	--	--	1,500 – 4,000	1,500 – 4,000
Asphalt modifier	Section 39-1.02D	Section 39-1.04C	--	--	Section 39-1.02D	Section 39-1.02D
Crumb rubber modifier	Section 39-1.02D	Section 39-1.04C	--	--	Section 39-1.02D	Section 39-1.02D

Notes:

[a] Determine combined aggregate gradation containing RAP under Laboratory Procedure LP-9.

[b] The tolerances must comply with the allowable tolerances in Section 39-1.02E, "Aggregate."

[c] Report the average of 3 tests from a single split sample.

[d] Determine field compaction for any of the following conditions:

1. 1/2-inch, 3/8-inch, No. 4 aggregate grading is used and the specified total paved thickness is at least 0.15 foot.
2. 3/4-inch aggregate grading is used and the specified total paved thickness is at least 0.20 foot.

[e] To determine field compaction use:

1. In-place density measurements using the method specified in your QC.
2. California Test 309 to determine maximum theoretical density at the frequency specified in California Test 375, Part 5C.

[f] Modify California Test 304, Part 2.B.2.c: "After compaction in the mechanical compactor, cool to 140 °F ± 5 °F by allowing the briquettes to cool at room temperature for 0.5 hour, then place the briquettes in the oven at 140 °F for a minimum of 2 hours and not more than 3 hours."

[g] Determine the bulk specific gravity of each lab-compacted briquette under California Test 308, Method A, and theoretical maximum specific gravity under California Test 309.

[h] For adjusting the plant controller at the HMA plant.

[i] The Engineer waives this specification if HMA contains 10 percent or less of nonmanufactured sand by weight of total aggregate. Manufactured sand is fine aggregate produced by crushing rock or gravel.

[j] Report only if the adjustment for asphalt binder content target value is less than or equal to ± 0.3 percent from OBC.

[k] Voids in mineral aggregate for RHMA-G must be within this range.

For any single quality characteristic except smoothness, if 2 consecutive quality control test results do not comply with the action limits or specifications:

1. Stop production.
2. Notify the Engineer in writing.
3. Take corrective action.
4. Demonstrate compliance with the specifications before resuming production and placement on the State highway.

39-2.03 ENGINEER'S ACCEPTANCE

39-2.03A Testing

The Engineer samples for acceptance testing and tests for:

HMA Acceptance - Standard

Quality Characteristic	Test Method	HMA Type			
		A	B	RHMA-G	OGFC
Aggregate gradation [a]	CT 202	JMF ± Tolerance [c]	JMF ± Tolerance [c]	JMF ± Tolerance [c]	JMF ± Tolerance [c]
Sieve: 3/4", 1/2", 3/8"					
1/2": X [b]					
3/8": X					
No. 4: X					
No. 8: X X X					
No. 200: X X X					
Sand equivalent (min.) [d]	CT 217	47	42	47	--
Asphalt binder content (%)	CT 379 or 382	JMF ± 0.45	JMF ± 0.45	JMF ± 0.50	JMF ± 0.50
HMA moisture content (%, max.)	CT 226 or CT 370	1.0	1.0	1.0	1.0
Field compaction (% max. theoretical density) [e,f]	CT 375	91 – 97	91 – 97	91 – 97	--
Stabilometer value (min.) [d,g]	CT 366				
No. 4 and 3/8" gradings		30	30	--	--
1/2" and 3/4" gradings		37	35	23	--
Air voids content (%) [d, h]	CT 367	4 ± 2	4 ± 2	Specification ± 2	--
Percent of crushed particles	CT 205				
Coarse aggregate (%, min.)					
One fractured face		90	25	--	90
Two fractured faces		75	--	90	75
Fine aggregate (%, min) (Passing No. 4 sieve and retained on No. 8 sieve.)					
One fractured face		70	20	70	90
Los Angeles Rattler (%, max.)	CT 211				
Loss at 100 rev.		12	--	12	12
Loss at 500 rev.		45	50	40	40
Fine aggregate angularity (%, min.) [i]	CT 234	45	45	45	--
Flat and elongated particles (%, max. by weight @ 5:1)	CT 235	Report only	Report only	Report only	Report only
Voids filled with asphalt (%) [j]	LP-3				
No. 4 grading		76.0 – 80.0	76.0 – 80.0	Report only	--
3/8" grading		73.0 – 76.0	73.0 – 76.0		
1/2" grading		65.0 – 75.0	65.0 – 75.0		
3/4" grading		65.0 – 75.0	65.0 – 75.0		
Voids in mineral aggregate (% min.) [j]	LP-2				
No. 4 grading		17.0	17.0	--	--
3/8" grading		15.0	15.0	--	
1/2" grading		14.0	14.0	18.0 – 23.0 [k]	
3/4" grading		13.0	13.0	18.0 – 23.0 [k]	
Dust proportion [j]	LP-4				
No. 4 and 3/8" gradings		0.9 – 2.0	0.9 – 2.0	Report only	--
1/2" and 3/4" gradings		0.6 – 1.3	0.6 – 1.3		
Smoothness	Section 39-1.12	12-foot straightedge, must-grind, and PI_0	12-foot straightedge, must-grind, and PI_0	12-foot straightedge, must-grind, and PI_0	12-foot straightedge and must-grind

Asphalt binder	Various	Section 92	Section 92	Section 92	Section 92
Asphalt rubber binder	Various	--	--	Section 92-1.02(C) and Section 39-1.02D	Section 92-1.02(C) and Section 39-1.02D
Asphalt modifier	Various	--	--	Section 39-1.02D	Section 39-1.02D
Crumb rubber modifier	Various	--	--	Section 39-1.02D	Section 39-1.02D

[a] The Engineer determines combined aggregate gradations containing RAP under Laboratory Procedure LP-9.
[b] "X" denotes the sieves the Engineer considers for the specified aggregate gradation.
[c] The tolerances must comply with the allowable tolerances in Section 39-1.02E, "Aggregate."
[d] The Engineer reports the average of 3 tests from a single split sample.
[e] The Engineer determines field compaction for any of the following conditions:

1. 1/2-inch, 3/8-inch, or No.4 aggregate grading is used and the specified total paved thickness is at least 0.15 foot.
2. 3/4-inch aggregate grading is used and the specified total paved thickness is at least 0.20 foot.

[f] To determined field compaction, the Engineer uses:

1. California Test 308, Method A, to determine in-place density of each density core.
2. California Test 309 to determine maximum theoretical density at the frequency specified in California Test 375, Part 5C.

[g] Modify California Test 304, Part 2.B.2.c: "After compaction in the mechanical compactor, cool to 140 °F ±5 °F by allowing the briquettes to cool at room temperature for 0.5 hour, then place the briquettes in the oven at 140 °F for a minimum of 2 hours and not more than 3 hours."
[h] The Engineer determines the bulk specific gravity of each lab-compacted briquette under California Test 308, Method A, and theoretical maximum specific gravity under California Test 309.
[i] The Engineer waives this specification if HMA contains 10 percent or less of nonmanufactured sand by weight of total aggregate. Manufactured sand is fine aggregate produced by crushing rock or gravel.
[j] Report only if the adjustment for asphalt binder content target value is less than or equal to ± 0.3 percent from OBC.
[k] Voids in mineral aggregate for RHMA-G must be within this range.

No single test result may represent more than the smaller of 750 tons or 1 day's production.

For any single quality characteristic except smoothness, if 2 consecutive acceptance test results do not comply with the specifications:

1. Stop production.
2. Take corrective action.
3. In the Engineer's presence, take samples and split each sample into 4 parts. Test 1 part for compliance with the specifications and submit 3 parts to the Engineer. The Engineer tests 1 part for compliance with the specifications and reserves and stores 2 parts.
4. Demonstrate compliance with the specifications before resuming production and placement on the State highway.

The Engineer tests the density core you take from each 250 tons of HMA production. The Engineer determines the percent of maximum theoretical density for each density core by determining the density core's density and dividing by the maximum theoretical density.

The Engineer determines the percent of maximum theoretical density from density cores taken from the final layer measured the full depth of the total paved HMA thickness if any of the following applies:

1. 1/2-inch, 3/8-inch, or No. 4 aggregate grading is used and the specified total paved thickness is at least 0.15 foot and any layer is less than 0.15 foot.
2. 3/4-inch aggregate grading is used and the specified total paved thickness is at least 0.20 foot and any layer is less than 0.20 foot.

For percent of maximum theoretical density, the Engineer determines a deduction for each test result outside the specifications in compliance with:

Reduced Payment Factors for Percent of Maximum Theoretical Density

HMA Type A and B and RHMA-G Percent of Maximum Theoretical Density	Reduced Payment Factor	HMA Type A and B and RHMA-G Percent of Maximum Theoretical Density	Reduced Payment Factor
91.0	0.0000	97.0	0.0000
90.9	0.0125	97.1	0.0125
90.8	0.0250	97.2	0.0250
90.7	0.0375	97.3	0.0375
90.6	0.0500	97.4	0.0500
90.5	0.0625	97.5	0.0625
90.4	0.0750	97.6	0.0750
90.3	0.0875	97.7	0.0875
90.2	0.1000	97.8	0.1000
90.1	0.1125	97.9	0.1125
90.0	0.1250	98.0	0.1250
89.9	0.1375	98.1	0.1375
89.8	0.1500	98.2	0.1500
89.7	0.1625	98.3	0.1625
89.6	0.1750	98.4	0.1750
89.5	0.1875	98.5	0.1875
89.4	0.2000	98.6	0.2000
89.3	0.2125	98.7	0.2125
89.2	0.2250	98.8	0.2250
89.1	0.2375	98.9	0.2375
89.0	0.2500	99.0	0.2500
< 89.0	Remove and Replace	> 99.0	Remove and Replace

39-2.04 TRANSPORTING, SPREADING, AND COMPACTING

Determine the number of rollers needed to obtain the specified density and surface finish.

39-3 METHOD

39-3.01 DESCRIPTION

If HMA is specified as Method, construct it under Section 39-1, "General," this Section 39-3, "Method," and Section 39-5, "Measurement and Payment."

39-3.02 ENGINEER'S ACCEPTANCE

39-3.02A Testing

The Engineer samples for acceptance testing and tests for:

HMA Acceptance - Method

Quality Characteristic	Test Method	HMA Type			
		A	B	RHMA-G	OGFC
Aggregate gradation [a]	CT 202	JMF ± Tolerance [b]	JMF ± Tolerance [b]	JMF ± Tolerance [b]	JMF ± Tolerance [b]
Sand equivalent (min.) [c]	CT 217	47	42	47	--
Asphalt binder content (%)	CT 379 or 382	JMF ± 0.45	JMF ± 0.45	JMF ± 0.50	JMF ± 0.50
HMA moisture content (%, max.)	CT 226 or CT 370	1.0	1.0	1.0	1.0
Stabilometer value (min.) [c,d]	CT 366				
No. 4 and 3/8" gradings		30	30	--	--
1/2" and 3/4" gradings		37	35	23	--
Percent of crushed particles	CT 205				
Coarse aggregate (% min.)					
One fractured face		90	25	--	90
Two fractured faces		75	--	90	75
Fine aggregate (% min) (Passing No. 4 sieve and retained on No. 8 sieve.)					
One fractured face		70	20	70	90
Los Angeles Rattler (% max.)	CT 211				
Loss at 100 rev.		12	--	12	12
Loss at 500 rev.		45	50	40	40
Air voids content (%) [c, e]	CT 367	4 ± 2	4 ± 2	Specification ± 2	--
Fine aggregate angularity (% min.) [f]	CT 234	45	45	45	--
Flat and elongated particles (% max. by weight @ 5:1)	CT 235	Report only	Report only	Report only	Report only
Voids filled with asphalt (%) [g]	LP-3			Report only	
No. 4 grading		76.0 – 80.0	76.0 – 80.0		--
3/8" grading		73.0 – 76.0	73.0 – 76.0		
1/2" grading		65.0 – 75.0	65.0 – 75.0		
3/4" grading		65.0 – 75.0	65.0 – 75.0		
Voids in mineral aggregate (% min.) [g]	LP-2				
No. 4 grading		17.0	17.0	--	--
3/8" grading		15.0	15.0	--	
1/2" grading		14.0	14.0	18.0 – 23.0 [h]	
3/4" grading		13.0	13.0	18.0 – 23.0 [h]	
Dust proportion [g]	LP-4				
No. 4 and 3/8" gradings		0.9 – 2.0	0.9 – 2.0	Report only	--
1/2" and 3/4" gradings		0.6 – 1.3	0.6 – 1.3		
Smoothness	Section 39-1.12	12-foot straightedge and must-grind	12-foot straightedge and must-grind	12-foot straightedge and must-grind	12-foot straightedge and must-grind
Asphalt binder	Various	Section 92	Section 92	Section 92	Section 92
Asphalt rubber binder	Various	--	--	Section 92-1.02(C) and	Section 92-1.02(C) and

				Section 39-1.02D	Section 39-1.02D
Asphalt modifier	Various	--	--	Section 39-1.02D	Section 39-1.02D
Crumb rubber modifier	Various	--	--	Section 39-1.02D	Section 39-1.02D

[a] The Engineer determines combined aggregate gradations containing RAP under Laboratory Procedure LP-9.
[b] The tolerances must comply with the allowable tolerances in Section 39-1.02E, "Aggregate."
[c] The Engineer reports the average of 3 tests from a single split sample.
[d] Modify California Test 304, Part 2.B.2.c: "After compaction in the mechanical compactor, cool to 140 °F ±5 °F by allowing the briquettes to cool at room temperature for 0.5 hour, then place the briquettes in the oven at 140 °F for a minimum of 2 hours and not more than 3 hours."
[e] The Engineer determines the bulk specific gravity of each lab-compacted briquette under California Test 308, Method A, and theoretical maximum specific gravity under California Test 309.
[f] The Engineer waives this specification if HMA contains 10 percent or less of nonmanufactured sand by weight of total aggregate. Manufactured sand is fine aggregate produced by crushing rock or gravel.
[g] Report only if the adjustment for asphalt binder content target value is less than or equal to ± 0.3 percent from OBC.
[h] Voids in mineral aggregate for RHMA-G must be within this range.

No single test result may represent more than the smaller of 750 tons or 1 day's production.

For any single quality characteristic except smoothness, if 2 consecutive acceptance test results do not comply with the specifications:

1. Stop production.
2. Take corrective action.
3. In the Engineer's presence, take samples and split each sample into 4 parts. Test 1 part for compliance with the specifications and submit 3 parts to the Engineer. The Engineer tests 1 part for compliance with the specifications and reserves and stores 2 parts.
4. Demonstrate compliance with the specifications before resuming production and placement on the State highway.

39-3.03 SPREADING AND COMPACTING EQUIPMENT

Each paver spreading HMA Type A and Type B must be followed by 3 rollers:

1. One vibratory roller specifically designed to compact HMA. The roller must be capable of at least 2,500 vibrations per minute and must be equipped with amplitude and frequency controls. The roller's gross static weight must be at least 7.5 tons.
2. One oscillating type pneumatic-tired roller at least 4 feet wide. Pneumatic tires must be of equal size, diameter, type, and ply. The tires must be inflated to 60 psi minimum and maintained so that the air pressure does not vary more than 5 psi.
3. One steel-tired, 2-axle tandem roller. The roller's gross static weight must be at least 7.5 tons.

Each roller must have a separate operator. Rollers must be self-propelled and reversible.

Compact RHMA-G under the specifications for compacting HMA Type A and Type B except do not use pneumatic-tired rollers.

Compact OGFC with steel-tired, 2-axle tandem rollers. If placing over 300 tons of OGFC per hour, use at least 3 rollers for each paver. If placing less than 300 tons of OGFC per hour, use at least 2 rollers for each paver. Each roller must weigh between 126 pounds to 172 pounds per linear inch of drum width. Turn the vibrator off.

39-3.04 TRANSPORTING, SPREADING, AND COMPACTING

Pave HMA in maximum 0.25-foot thick compacted layers.

If the surface to be paved is both in sunlight and shade, pavement surface temperatures are taken in the shade.

Spread HMA Type A and Type B only if atmospheric and surface temperatures are:

Minimum Atmospheric and Surface Temperatures

Compacted Layer Thickness, feet	Atmospheric,° F		Surface,° F	
	Unmodified Asphalt Binder	Modified Asphalt Binder[a]	Unmodified Asphalt Binder	Modified Asphalt Binder [a]
< 0.15	55	50	60	55
0.15 – 0.25	45	45	50	50

Note:
[a] Except asphalt rubber binder.

If the asphalt binder for HMA Type A and Type B is:

1. Unmodified asphalt binder, complete:

   1.1. First coverage of breakdown compaction before the surface temperature drops below 250 °F
   1.2. Breakdown and intermediate compaction before the surface temperature drops below 200 °F
   1.3. Finish compaction before the surface temperature drops below 150 °F

2. Modified asphalt binder, complete:

   2.1. First coverage of breakdown compaction before the surface temperature drops below 240 °F
   2.2. Breakdown and intermediate compaction before the surface temperature drops below 180 °F
   2.3. Finish compaction before the surface temperature drops below 140 °F

For RHMA-G:

1. Only spread and compact if the atmospheric temperature is at least 55 °F and the surface temperature is at least 60 °F.
2. Complete the first coverage of breakdown compaction before the surface temperature drops below 285 °F.
3. Complete breakdown and intermediate compaction before the surface temperature drops below 250 °F.
4. Complete finish compaction before the surface temperature drops below 200 °F.
5. If the atmospheric temperature is below 70 °F, cover loads in trucks with tarpaulins. The tarpaulins must completely cover the exposed load until you transfer the mixture to the paver's hopper or to the pavement surface.

For OGFC with unmodified asphalt binder:

1. Only spread and compact if the atmospheric temperature is at least 55 °F and the surface temperature is at least 60 °F.
2. Complete first coverage using 2 rollers before the surface temperature drops below 240 °F.
3. Complete all compaction before the surface temperature drops below 200 °F.
4. If the atmospheric temperature is below 70 °F, cover loads in trucks with tarpaulins. The tarpaulins must completely cover the exposed load until you transfer the mixture to the paver's hopper or to the pavement surface.

For OGFC with modified asphalt binder except asphalt rubber binder:

1. Only spread and compact if the atmospheric temperature is at least 50 °F and the surface temperature is at least 50 °F.
2. Complete first coverage using 2 rollers before the surface temperature drops below 240 °F.
3. Complete all compaction before the surface temperature drops below 180 °F.
4. If the atmospheric temperature is below 70 °F, cover loads in trucks with tarpaulins. The tarpaulins must completely cover the exposed load until you transfer the mixture to the paver's hopper or to the pavement surface.

For RHMA-O and RHMA-O-HB:

1. Only spread and compact if the atmospheric temperature is at least 55 °F and surface temperature is at least 60 °F.
2 Complete the 1st coverage using 2 rollers before the surface temperature drops below 280 °F.
3. Complete compaction before the surface temperature drops below 250 °F.
4. If the atmospheric temperature is below 70 °F, cover loads in trucks with tarpaulins. The tarpaulins must completely cover the exposed load until the mixture is transferred to the paver's hopper or to the pavement surface.

For RHMA-G and OGFC, tarpaulins are not required if the time from discharge to truck until transfer to the paver's hopper or the pavement surface is less than 30 minutes.

HMA compaction coverage is the number of passes needed to cover the paving width. A pass is 1 roller's movement parallel to the paving in either direction. Overlapping passes are part of the coverage being made and are not a subsequent coverage. Do not start a coverage until completing the prior coverage.

Start rolling at the lower edge and progress toward the highest part.

Perform breakdown compaction of each layer of HMA Type A, Type B, and RHMA-G with 3 coverages using a vibratory roller. The speed of the vibratory roller in miles per hour must not exceed the vibrations per minute divided by 1,000. If the HMA layer thickness is less than 0.08 foot, turn the vibrator off. The Engineer may order fewer coverages if the HMA layer thickness is less than 0.15 foot.

Perform intermediate compaction of each layer of HMA Type A and Type B with 3 coverages using a pneumatic-tired roller at a speed not to exceed 5 mph.

Perform finish compaction of HMA Type A, Type B, and RHMA-G with 1 coverage using a steel-tired roller.

Compact OGFC with 2 coverages using steel-tired rollers.

39-5 MEASUREMENT AND PAYMENT

39-5.01 MEASUREMENT

The contract item for HMA is measured by weight. The weight of each HMA mixture designated in the Engineer's Estimate must be the combined mixture weight.

If tack coat, asphalt binder, and asphaltic emulsion are paid with separate contract items, their contract items are measured under Section 92, "Asphalts," or Section 94, "Asphaltic Emulsions," as the case may be.

If recorded batch weights are printed automatically, the contract item for HMA is measured by using the printed batch weights, provided:

1. Total aggregate and supplemental fine aggregate weight per batch is printed. If supplemental fine aggregate is weighed cumulatively with the aggregate, the total aggregate batch weight must include the supplemental fine aggregate weight.
2. Total asphalt binder weight per batch is printed.
3. Each truckload's zero tolerance weight is printed before weighing the first batch and after weighing the last batch.
4. Time, date, mix number, load number and truck identification is correlated with a load slip.
5. A copy of the recorded batch weights is certified by a licensed weighmaster and submitted to the Engineer.

The contract item for placing HMA dike is measured by the linear foot along the completed length. The contract item for placing HMA in miscellaneous areas is measured as the in-place compacted area in square yards. In addition to the quantities measured on a linear foot or square yard basis, the HMA for dike and miscellaneous areas are measured by weight.

The contract item for geosynthetic pavement interlayer is measured by the square yard for the actual pavement area covered.

39-5.02 PAYMENT

The contract prices paid per ton for hot mix asphalt as designated in the Engineer's Estimate include full compensation for furnishing all labor, materials, tools, equipment, and incidentals for doing all the work involved in constructing hot mix asphalt, complete in place, as shown on the plans, as specified in these specifications and the special provisions, and as directed by the Engineer.

If HMA is specified to comply with Section 39-4, "Quality Control / Quality Assurance," the Engineer adjusts payment under that section.

Full compensation for the Quality Control Plan and prepaving conference is included in the contract prices paid per ton for hot mix asphalt as designated in the Engineer's Estimate and no additional compensation will be allowed therefor.

Full compensation for performing and submitting mix designs and for Contractor sampling, testing, inspection, testing facilities, and preparation and submittal of results is included in the contract prices paid per ton for HMA as designated in the Engineer's Estimate and no additional compensation will be allowed therefor.

Full compensation for reclaimed asphalt pavement is included in the contract prices paid per ton for HMA as designated in the Engineer's Estimate and no additional compensation will be allowed therefor.

The contract price paid per ton for hot mix asphalt (leveling) includes full compensation for furnishing all labor, materials, tools, equipment, and incidentals for doing all the work involved in hot mix asphalt (leveling), complete in place, as shown on the plans, as specified in these specifications and the special provisions, and as directed by the Engineer.

The State pays for HMA dike at the contract price per linear foot for place HMA dike and by the ton for HMA. The contract prices paid per linear foot for place hot mix asphalt dike as designated in the Engineer's Estimate include full compensation for furnishing all labor, tools, equipment, and incidentals, and for doing all the work involved in placing HMA dike, complete in place, including excavation, backfill, and preparation of the area to receive the dike, as shown on the plans, as specified in these specifications and the special provisions, and as directed by the Engineer.

The State pays for HMA specified to be a miscellaneous area at the contract price per square yard for place hot mix asphalt (miscellaneous area) and per ton for hot mix asphalt. The contract price paid per square yard for place hot mix asphalt (miscellaneous area) includes full compensation for furnishing all labor, tools, equipment, and incidentals, and for doing all the work involved in placing HMA (miscellaneous area) complete in place, including excavation, backfill, and preparation of the area to receive HMA (miscellaneous area), as shown on the plans, as specified in these specifications and the special provisions, and as directed by the Engineer.

If the Quality Control / Quality Assurance construction process is specified, HMA placed in dikes and miscellaneous areas is paid for at the contract price per ton for hot mix asphalt under Section 39-4, "Quality Control / Quality Assurance." Section 39-4.05B, "Statistical Evaluation, Determination of Quality Factors and Acceptance," does not apply to HMA placed in dikes and miscellaneous areas.

If there are no contract items for place hot mix asphalt dike and place hot mix asphalt (miscellaneous area) and the work is specified, full compensation for constructing HMA dikes and HMA (miscellaneous areas) including excavation, backfill, and preparation of the area to receive HMA dike or HMA (miscellaneous area) is included in the contract price paid per ton for the hot mix asphalt designated in the Engineer's Estimate and no separate payment will be made therefor.

The contract price paid per square yard for geosynthetic pavement interlayer of the type shown on the verified Bid Item List includes full compensation for furnishing all labor, materials, tools, equipment, and incidentals, and for doing all the work involved in placing geosynthetic pavement interlayer, complete in place, as shown on the plans, as specified in these specifications and the special provisions, and as directed by the Engineer.

The contract price paid per ton for paving asphalt (binder, geosynthetic pavement interlayer) includes full compensation for furnishing all labor, materials, tools, equipment, and incidentals, and for doing all the work involved in applying paving asphalt (binder, geosynthetic pavement interlayer), complete in place, including spreading sand to cover exposed binder material, as shown on the plans, as specified in these specifications and the special provisions, and as directed by the Engineer.

Full compensation for small quantities of HMA placed on geosynthetic pavement interlayer to prevent displacement during construction is included in the contract price paid per ton for the HMA being paved over the interlayer and no separate payment will be made therefor.

The contract price paid per ton for tack coat includes full compensation for furnishing all labor, materials, tools, equipment, and incidentals, and for doing all the work involved in applying tack coat, complete in place, as shown on the plans, as specified in these specifications and the special provisions, and as directed by the Engineer.

The Engineer does not adjust payment for increases or decreases in the quantities for tack coat, regardless of the reason for the increase or decrease. Section 4-1.03B, "Increased or Decreased Quantities," does not apply to the items for tack coat.

Full compensation for performing smoothness testing, submitting written and electronic copies of tests, and performing corrective work including applying fog seal coat is included in the contract price paid per ton for the HMA designated in the Engineer's Estimate and no separate payment will be made therefor.

Full compensation for spreading sand on RHMA-G, RHMA-O, and RHMA-O-HB surfaces and for sweeping and removing excess sand is included in the contract price paid per ton for rubberized hot mix asphalt as designated in the Engineer's Estimate and no separate payment will be made therefor.

If the dispute resolution ITP determines the Engineer's test results are correct, the Engineer deducts the ITP's testing costs from payments. If the ITP determines your test results are correct, the State pays the ITP's testing costs. If, in the Engineer's opinion, work completion is delayed because of incorrect Engineer test results, the Department makes payment and time adjustments under Section 8-1.09, "Delays."

^^

SECTION 52 REINFORCEMENT
(Issued 06-05-09)

In Section 52-1.02(B) between the 3rd and 4th paragraphs, add:

The epoxy powder coating shall be selected from the Department's Pre-Qualified Products List.

In Section 52-1.02(B) replace the 14th paragraph with:

Except for lap splices, splices for epoxy-coated reinforcement shall be coated with a corrosion protection covering that is selected from the Department's Pre-Qualified Products List. The covering shall be installed in accordance with the manufacturer's recommendations.

In Section 52-1.07 in the 11th paragraph, replace the table with:

Height Zone (H) (Feet above ground)	Wind Pressure Value (psf)
$H \leq 30$	20
$30 < H \leq 50$	25
$50 < H \leq 100$	30
$H > 100$	35

In Section 52-1.08B(1) replace the 1st paragraph with:

Mechanical splices to be used in the work shall be selected from the Department's Pre-Qualified Products List.

In Section 52-1.08B(1) in the 2nd paragraph, replace the table with:

Reinforcing Bar Number	Total Slip
4	0.020-inch
5	0.020-inch
6	0.020-inch
7	0.028-inch
8	0.028-inch
9	0.028-inch
10	0.036-inch
11	0.036-inch
14	0.048-inch
18	0.060-inch

In Section 52-1.08B(1), in the 6th paragraph, delete item C.

In Section 52-1.08B(2) in the 6th paragraph, replace the subparagraph with:

The minimum preheat and interpass temperatures shall be 400º F for Grade 40 bars and 600º F for Grade 60 bars. Immediately after completing the welding, at least 6 inches of the bar on each side of the splice shall be covered by an insulated wrapping to control the rate of cooling. The insulated wrapping shall remain in place until the bar has cooled below 200º F.

Replace Section 52-1.08B(3) with:

52-1.08B(3) Resistance Butt Welds

Shop produced resistance butt welds shall be produced by a fabricator who is selected from the Department's Pre-Qualified Products List.

A Certificate of Compliance conforming to the provisions in Section 6-1.07, "Certificates of Compliance," shall be furnished for each shipment of splice material. The Certificate of Compliance shall include heat number, lot number and mill certificates.

In Section 52-1.08C replace the 3rd paragraph with:

Testing on prequalification and production sample splices shall be performed at an approved independent testing laboratory. The laboratory shall not be employed or compensated by any subcontractor, or by other persons or entities hired by subcontractors who will provide other services or materials for the project.

The independent testing laboratory shall be selected from the Department's Pre-Qualified Products List.

In Section 52-1.08C replace the 5th paragraph with:

Prequalification and production sample splices and testing shall conform to California Test 670 and these specifications.

In Section 52-1.08C delete the 6th paragraph.

In Section 52-1.08C replace the 8th paragraph with:

Each sample splice, as defined herein, shall be identified as representing either a prequalification or production test sample splice.

In Section 52-1.08C in the 10th paragraph, delete the last sentence.

Replace Section 52-1.08C(1) with:

52-1.08C(1) Splice Prequalification Report

Before using any service splices or ultimate butt splices in the work, the Contractor shall submit a Splice Prequalification Report. The report shall include the following:

A. A copy of the manufacturer's product literature giving complete data on the splice material and installation procedures.
B. Names of the operators who will be performing the splicing.
C. Descriptions of the positions, locations, equipment, and procedures that will be used in the work.
D. Certifications from the fabricator for prequalification of operators and procedures based on sample tests performed no more than 2 years before submitting the report. Each operator shall be certified by performing 2 sample splices for each bar size of each splice type that the operator will be performing in the work. For deformation-dependent types of splice devices, each operator shall be certified by performing 2 additional samples for each bar size and deformation pattern that will be used in the work.

Prequalification sample splices shall be tested by an approved independent testing laboratory and shall conform to the appropriate production test criteria and slip requirements specified herein. When epoxy-coated reinforcement is required, resistance butt welded sample splices shall have the weld flash removed by the same procedure as will be used in the work, before coating and testing. The Splice Prequalification Report shall include the certified test results for all prequalification sample splices.

The QCM shall review and approve the Splice Prequalification Report before submitting it to the Engineer for approval. The Contractor shall allow 2 weeks for the review and approval of a complete report before performing any service splicing or ultimate butt splicing in the work.

In Section 52-1.08C(2)(a) replace the 1st, 2nd, 3rd, 4th, and 5th paragraphs with:

Production tests shall be performed by an approved independent testing laboratory for all service splices used in the work. A production test shall consist of testing 4 sample splices prepared for each lot of completed splices. The samples shall be prepared by the Contractor using the same splice material, position, operators, location, and equipment, and following the same procedure as used in the work.

At least one week before testing, the Contractor shall notify the Engineer in writing of the date and location where the testing of the samples will be performed.

The 4 samples from each production test shall be securely bundled together and identified with a completed sample identification card before shipment to the approved independent testing laboratory. The card will be furnished by the Engineer. Bundles of samples containing fewer than 4 samples of splices shall not be tested.

Before performing any tensile tests on production test sample splices, one of the 4 samples shall be tested for, and shall conform to, the requirements for total slip in Section 52-1.08B(1), "Mechanical Splices." Should this sample not meet the total slip requirements, one retest, in which the 3 remaining samples are tested for total slip, will be allowed. Should any of the 3 remaining samples not conform to the total slip requirements, all splices in the lot represented by this production test will be rejected.

If 3 or more sample splices from a production test conform to the provisions in this Section 52-1.08C(2), "Service Splice Test Criteria," all splices in the lot represented by this production test will be considered acceptable.

Replace Section 52-1.08C(2)(b) with:

52-1.08C(2)(b) Quality Assurance Test Requirements for Service Splices

In addition to the required production tests, the Contractor shall concurrently prepare 4 service quality assurance sample splices for:

A. The first production test performed.
B. One of every 5 subsequent production tests, or fraction thereof, randomly selected by the Engineer.

These service quality assurance sample splices shall be prepared in the same manner as specified herein for service production sample splices.

The service quality assurance sample splices shall be shipped to the Transportation Laboratory for quality assurance testing. Each set of 4 sample splices shall be securely bundled together and identified by location and contract number with weatherproof markings before shipment. Bundles containing fewer than 4 samples of splices will not be tested. Sample splices not accompanied by the supporting documentation required in Section 52-1.08B(1), "Mechanical Splices," for mechanical splices, or in Section 52-1.08B(3), "Resistance Butt Welds," for resistance butt welds, will not be tested.

Quality assurance testing will be performed in conformance with the requirements for service production sample splices in Section 52-1.08C(2)(a), "Production Test Requirements for Service Splices."

Replace Section 52-1.08C(3) with:

52-1.08C(3) Ultimate Butt Splice Test Criteria

Ultimate production and quality assurance sample splices shall be tensile tested in conformance with the requirements described in ASTM Designation: A 370 and California Test 670.

Each sample splice shall be identified as representing a prequalification, production, or quality assurance sample splice.

The portion of hoop reinforcing bar, removed to obtain a sample splice, shall be replaced using a prequalified ultimate mechanical butt splice, or the hoop shall be replaced in kind.

Reinforcing bars, other than hoops, from which sample splices are removed, shall be repaired using ultimate mechanical butt splices conforming to the provisions in Section 52-1.08C(1), "Splice Prequalification Report," or the bars shall be replaced in kind. These bars shall be repaired or replaced such that no splices are located in any "No Splice Zone" shown on the plans.

Ultimate production and quality assurance sample splices shall rupture either: 1) in the reinforcing bar but outside of the affected zone, provided that the sample splice has visible necking or 2) anywhere, provided that the sample splice has achieved the strain requirement for necking.

When tested in conformance with the requirements in California Test 670, "Necking (Option I)," the visible necking shall be such that there is a visible decrease in the sample's cross-sectional area at the point of rupture.

When tested in conformance with the requirements in California Test 670, "Necking (Option II)," the strain requirement for necking shall be such that the largest measured strain is not less than 6 percent for No. 11 and larger bars, or not less than 9 percent for No. 10 and smaller bars.

The affected zone is the portion of the reinforcing bar where any properties of the bar, including the physical, metallurgical, or material characteristics, have been altered by fabrication or installation of the splice. The weld and one inch adjacent to the weld will be considered part of the affected zone.

In Section 52-1.08C(3)(a) replace the 1st paragraph with:

Production tests shall be performed for all ultimate butt splices used in the work. A production test shall consist of testing 4 sample splices removed from each lot of completed splices.

In Section 52-1.08C(3)(a) replace the 3rd paragraph with:

After notification has been received, the Engineer will randomly select the 4 sample splices to be removed from the lot and place tamper-proof markings or seals on them. These ultimate production sample splices shall be removed by the Contractor, and tested by an approved independent testing laboratory.

In Section 52-1.08(C)(3)(a) replace the 5th, 6th, and 7th paragraphs with:

A sample splice will be rejected if a tamper-proof marking or seal is disturbed before testing.

The 4 sample splices from each production test shall be securely bundled together and identified with a completed sample identification card before shipment to the approved independent testing laboratory. The card will be furnished by the Engineer. Bundles of samples containing fewer than 4 sample splices shall not be tested.

Before performing any tensile tests on production test sample splices, one of the 4 sample splices shall be tested for, and shall conform to, the requirements for total slip in Section 52-1.08B(1), "Mechanical Splices." Should this sample splice not meet these requirements, one retest, in which the 3 remaining sample splices are tested for total slip, will be allowed. Should any of the 3 remaining sample splices not conform to these requirements, all splices in the lot represented by this production test will be rejected.

Replace Section 52-1.08C(3)(b) with:

52-1.08C(3)(b) Quality Assurance Test Requirements for Ultimate Butt Splices

In addition to the required production tests, the Contractor shall concurrently prepare 4 ultimate quality assurance sample splices for:

A. The first production test performed.
B. One of every 5 subsequent production tests, or fraction thereof, randomly selected by the Engineer.

These ultimate quality assurance sample splices shall be prepared in the same manner as specified herein for ultimate production sample splices.

The ultimate quality assurance sample splices shall be shipped to the Transportation Laboratory for quality assurance testing. Each set of 4 sample splices shall be securely bundled together and identified by location and contract number with weatherproof markings before shipment. Bundles containing fewer than 4 samples of splices will not be tested. Sample splices not accompanied by the supporting documentation required in Section 52-1.08B(1), "Mechanical Splices," for mechanical splices, or in Section 52-1.08B(3), "Resistance Butt Welds," for resistance butt welds, will not be tested.

Quality assurance testing will be performed in conformance with the requirements for ultimate production sample splices in Section 52-1.08C(3)(a), "Production Test Requirements for Ultimate Butt Splices."

Replace Section 52-1.08D with:

A Production Test Report for all testing performed on each lot shall be prepared by the approved independent testing laboratory performing the testing and submitted to the QCM for review and approval. The report shall be signed by an engineer who represents the laboratory and is registered as a Civil Engineer in the State of California. The report shall include, as a minimum, the following information for each test: contract number, bridge number, lot number and location, bar size, type of splice, length of mechanical splice, length of test specimen, physical condition of test sample splice, any notable defects, total measured slip, and ultimate tensile strength of each splice.

In addition, the report shall include location of visible necking area and largest measured strain for ultimate butt splices.

The QCM must review, approve, and forward each Production Test Report to the Engineer for review before the splices represented by the report are encased in concrete. The Engineer will have 3 working days to review each Production Test Report and respond in writing after a complete report has been received. Should the Contractor elect to encase any splices before receiving notification from the Engineer, it is expressly understood that the Contractor will not be relieved of the responsibility for incorporating material in the work that conforms to the requirements of the plans and specifications. Material not conforming to these requirements will be subject to rejection.

Quality assurance test results for each bundle of 4 samples of splices will be reported in writing to the Contractor within 3 working days after receipt of the bundle by the Transportation Laboratory. In the event that more than one bundle is received on the same day, 2 additional working days shall be allowed for providing test results for each additional bundle received. A test report will be made for each bundle received. Should the Contractor elect to encase splices before receiving notification from the Engineer, it is expressly understood that the Contractor will not be relieved of the responsibility for incorporating material in the work that conforms to the requirements of the plans and specifications. Material not conforming to these requirements will be subject to rejection.

^^

^^

SECTION 73 CONCRETE CURBS AND SIDEWALKS
(Issued 06-05-09)

In Section 73-1.01 in the 2nd paragraph, replace item 2 with:

2. Minor concrete shall contain not less than 463 pounds of cementitious material per cubic yard except that when extruded or slip-formed curbs are constructed using 3/8-inch maximum size aggregate, minor concrete shall contain not less than 505 pounds of cementitious material per cubic yard.

In Section 73-1.06 replace the 15th paragraph with:

Where hot mix asphalt or portland cement concrete pavements are to be placed around or adjacent to manholes, pipe inlets or other miscellaneous structures in sidewalk, gutter depression, island paving, curb ramps or driveway areas, the structures shall not be constructed to final grade until after the pavements have been constructed for a reasonable distance on each side of the structures.

SECTION 75 MISCELLANEOUS METAL
(Issued 07-01-11)

In Section 75-1.02 replace the 6th paragraph with:

Manhole frames and covers shall conform to AASHTO M 306.

In Section 75-1.02 replace the 10th paragraph with:

Unless otherwise specified, materials shall conform to the following specifications:

Material	Specification
Steel bars, plates and shapes	ASTM Designation: A 36/A 36M or A 575, A 576 (AISI or M Grades 1016 through 1030)
Steel fastener components for general applications:	
Bolts and studs	ASTM Designation: A 307
Headed anchor bolts	ASTM Designation: A 307, Grade B, including S1 supplementary requirements
Nonheaded anchor bolts	ASTM Designation: F 1554 or A 307, Grade C, including S1 supplementary requirements and S1.6 of AASHTO Designation: M 314 supplementary requirements, or AASHTO Designation: M 314, Grade 36 or 55, including S1 supplementary requirements
High-strength bolts and studs, threaded rods, and nonheaded anchor bolts	ASTM Designation: A 449, Type 1
Nuts	ASTM Designation: A 563, including Appendix X1*
Washers	ASTM Designation: F 844
Components of high-strength steel fastener assemblies for use in structural steel joints:	
Bolts	ASTM Designation: A 325, Type 1
Tension control bolts	ASTM Designation: F 1852, Type 1
Nuts	ASTM Designation: A 563, including Appendix X1*
Hardened washers	ASTM Designation: F 436, Type 1, Circular, including S1 supplementary requirements
Direct tension indicators	ASTM Designation: F 959, Type 325, zinc-coated
Stainless steel fasteners (Alloys 304 & 316) for general applications:	
Bolts, screws, studs, threaded rods, and nonheaded anchor bolts	ASTM Designation: F 593 or F 738M
Nuts	ASTM Designation: F 594 or F 836M
Washers	ASTM Designation: A 240/A 240M and ANSI B 18.22M
Carbon-steel castings	ASTM Designation: A 27/A 27M, Grade 65-35, Class 1
Malleable iron castings	ASTM Designation: A 47, Grade 32510 or A 47M, Grade 22010
Gray iron castings Inside a roadbed Outside a roadbed	 AASHTO M 306 AASHTO M306 except only AASHTO M105, Class 35B is allowed
Ductile iron castings	ASTM Designation: A 536, Grade 65-45-12
Cast iron pipe	Commercial quality
Steel pipe	Commercial quality, welded or extruded
Other parts for general applications	Commercial quality

*Zinc-coated nuts that will be tightened beyond snug or wrench tight shall be furnished with a dyed dry lubricant conforming to Supplementary Requirement S2 in ASTM Designation: A 563.

In Section 75-1.03 replace the 13th paragraph with:

Concrete anchorage devices shall be mechanical expansion or resin capsule types installed in drilled holes or cast-in-place insert types. The anchorage devices shall be selected from the Department's Pre-Qualified Products List. The qualification requirements for concrete anchorage devices may be obtained from the Pre-Qualified Products List Web site.

The anchorage devices shall be a complete system, including threaded studs, hex nuts, and cut washers. Thread dimensions for externally threaded concrete anchorage devices prior to zinc coating shall conform to the requirements in ASME Standard: B1.1 having Class 2A tolerances or ASME Standard: B1.13M having Grade 6g tolerances. Thread dimensions for internally threaded concrete anchorage devices shall conform to the requirements in ASTM A 563.

In Section 75-1.03 replace the 18th paragraph with:

Mechanical expansion anchors shall, when installed in accordance with the manufacturer's instructions and these specifications and tested in conformance with the requirements in California Test 681, withstand the application of a sustained tension test load of at least the following values for at least 48 hours with a movement not greater than 0.035 inch:

Stud Diameter (inches)	Sustained Tension Test Load (pounds)
*3/4	5,000
5/8	4,100
1/2	3,200
3/8	2,100
1/4	1,000

* Maximum stud diameter permitted for mechanical expansion anchors.

Resin capsule anchors shall, when installed in accordance with the manufacturer's instructions and these specifications and tested in conformance with the requirements in California Test 681, withstand the application of a sustained tension test load of at least the following values for at least 48 hours with a movement not greater than 0.010 inch:

Stud Diameter (inches)	Sustained Tension Test Load (pounds)
1-1/4	31,000
1	17,900
7/8	14,400
3/4	5,000
5/8	4,100
1/2	3,200
3/8	2,100
1/4	1,000

At least 25 days before use, the Contractor shall submit one sample of each resin capsule anchor per lot to the Transportation Laboratory for testing. A lot of resin capsule anchors is 100 units, or fraction thereof, of the same brand and product name.

In Section 75-1.03 replace the 20th paragraph with:

A Certificate of Compliance for concrete anchorage devices shall be furnished to the Engineer in conformance with the provisions in Section 6-1.07, "Certificates of Compliance."

In Section 75-1.03 replace the 24th paragraph with:

Sealing compound, for caulking and adhesive sealing, shall be a polysulfide or polyurethane material conforming to the requirements in ASTM Designation: C 920, Type S, Grade NS, Class 25, Use O.

In Section 75-1.035 in the 3rd paragraph, replace the 1st sentence with:

Cables shall be 3/4 inch preformed, 6 x 19, wire strand core or independent wire rope core (IWRC), galvanized in conformance with the requirements in Federal Specification RR-W-410, right regular lay, manufactured of improved plow steel with a minimum breaking strength of 23 tons.

In Section 75-1.035 in the 4th paragraph, replace item C with:

C. Nuts shall conform to the requirements in ASTM Designation: A 563 including Appendix X1, except lubrication is not required.

In Section 75-1.035 replace the 12th paragraph with:

Concrete for filling cable drum units shall conform to the provisions in Section 90-10, "Minor Concrete," or at the option of the Contractor, may be a mix with 3/8-inch maximum size aggregate and not less than 675 pounds of cementitious material per cubic yard.

In Section 75-1.05 replace the 6th paragraph with:

Galvanizing of iron and steel hardware and nuts and bolts, when specified or shown on the plans, shall conform to the requirements in ASTM Designation: A 153/A 153M, except whenever threaded studs, bolts, nuts, and washers are specified to conform to the requirements in ASTM Designation: A 307, A 325, A 449, A 563, F 436, or F 1554 and zinc coating is required, they shall be hot-dip zinc coated or mechanically zinc coated in conformance with the requirements in the ASTM Designations. Unless otherwise specified, galvanizing shall be performed after fabrication.

In Section 75-1.05 replace the 8th paragraph with:

Tapping of nuts or other internally threaded parts to be used with zinc coated bolts, anchor bars or studs shall be done after galvanizing and shall conform to the requirements for thread dimensions and overtapping allowances in ASTM Designation: A 563.

^^

SECTION 80 FENCES

(Issued 01-05-07)

In Section 80-3.01F replace the 4th paragraph with:

Portland cement concrete for metal post and brace footings and for deadmen shall be minor concrete conforming to the provisions in Section 90-10, "Minor Concrete." Minor concrete shall contain not less than 470 pounds of cementitious material per cubic yard.

In Section 80-4.01C replace the 4th paragraph with:

Portland cement concrete for metal post and for deadmen shall be produced from minor concrete conforming to the provisions in Section 90-10, "Minor Concrete." Minor concrete shall contain not less than 470 pounds of cementitious material per cubic yard.

^^

SECTION 85 PAVEMENT MARKERS
(Issued 07-31-07)

In Section 85-1.06 replace the 6th paragraph with:

Pavement markers shall not be placed on new hot mix asphalt surfacing or seal coat until the surfacing or seal coat has been opened to public traffic for a period of not less than 7 days when hot melt bituminous adhesive is used, and not less than 14 days when epoxy adhesive is used.

In Section 85-1.06 in the 14th paragraph, replace the 2nd sentence with:

Cleaning shall be done by blast cleaning on all surfaces regardless of age or type, except that blast cleaning of clean, new hot mix asphalt and clean, new seal coat surfaces will not be required when hot melt bituminous adhesive is used.

^^

SECTION 90 PORTLAND CEMENT CONCRETE
(Issued 08-05-11)

Replace Section 90 with:

SECTION 90 PORTLAND CEMENT CONCRETE

90-1 GENERAL

90-1.01 DESCRIPTION

Portland cement concrete shall be composed of cementitious material, fine aggregate, coarse aggregate, admixtures if used, and water, proportioned and mixed as specified in these specifications.

The Contractor shall determine the mix proportions for concrete in conformance with these specifications.

Minor concrete shall contain not less than 505 pounds of cementitious material per cubic yard unless otherwise specified in these specifications or the special provisions.

Unless otherwise designated on the plans or specified in these specifications or the special provisions, the amount of cementitious material used per cubic yard of concrete in structures or portions of structures shall conform to the following:

Use	Cementitious Material Content (Pounds/CY)
Concrete designated by compressive strength:	
Deck slabs and slab spans of bridges	675 min., 800 max.
Roof sections of exposed top box culverts	675 min., 800 max.
Other portions of structures	590 min., 800 max.
Concrete not designated by compressive strength:	
Deck slabs and slab spans of bridges	675 min.
Roof sections of exposed top box culverts	675 min.
Prestressed members	675 min.
Seal courses	675 min.
Other portions of structures	590 min.
Concrete for precast members	590 min., 925 max.

Except for minor structures, the minimum required compressive strength for concrete in structures or portions of structures shall be the strength specified, or 3600 pounds per square inch at 28 days, whichever is greater.

Except for when a modulus of rupture is specified, the minimum required compressive strength for concrete shall be the strength specified, or 2,500 pounds per square inch, whichever is greater. Concrete shall be proportioned such that the concrete will attain the minimum required compressive strength.

If the specified 28-day compressive strength is 3,600 pounds per square inch or greater, the concrete is designated by compressive strength. For concrete with a 28-day compressive strength greater than 3,600 pounds per square inch, 42 days will be allowed to obtain the specified strength.

For concrete not designated by compressive strength, the Engineer may test the concrete for compressive strength. The concrete will be accepted if the compressive strength at 28 days attains 85 percent or more of the minimum required compressive strength.

Concrete shall be proportioned to conform to the following shrinkage limitations when tested in conformance with the requirements of AASHTO Designation: T 160, modified as follows:

Condition	Maximum Shrinkage of Laboratory Cast Specimens at 28 days Drying (average of 3, %)
Paving and approach slab concrete	0.050
Bridge deck concrete	0.045

Note: Shrinkage requirement is waived for concrete that is used for precast elements.

Shrinkage tests shall be either:

A. Performed by a laboratory accredited to perform AASHTO Designation: T 160, or
B. Performed by a laboratory that maintains a current rating of 3 or better for the Cement and Concrete Reference Laboratory (CCRL) concrete proficiency sample program.

Laboratory cast specimens shall have a 4" x 4" cross section. Specimens shall be removed from the molds 23 ± 1 hours after mixing the concrete and placed in lime water at 73 ± 3 °F to 7 days age. A comparator reading shall be taken at 7 days age and recorded as the initial reading. Specimens then shall be stored in a humidity controlled room maintained at 73 ± 3 °F and 50 ± 4 percent relative humidity for the remainder of the test. Subsequent readings shall be taken at 7, 14, 21, and 28 days drying.

Test data verifying conformance to the shrinkage limitations shall be submitted with the mix design. Shrinkage testing data accepted by the Engineer no more than 3 years prior to the first working day of this contract will be acceptable for this entire contract, provided the data was for concrete with similar proportions and the same materials and material sources to be used on this contract. Concrete shall be considered to have similar proportions if, when compared to concrete to be used on this project, no more than 2 mix design elements are varied. Varied mix design elements shall fall within the tolerances in the following table:

Mix Design Element	Tolerance (±)
Water to cementitious material ratio	0.03
Total water content	5 %
Coarse aggregate (weight per cubic yard)	10 %
Fine aggregate (weight per cubic yard)	10 %
Supplementary cementitious material content	5 %
Admixture (as originally dosed)	25 %

Note: Admixtures must be of the same brand.

Before using concrete or in advance of revising the mix proportions, the Contractor shall submit in writing to the Engineer a copy of the mix design.

Compliance with cementitious material content requirements will be verified in conformance with procedures described in California Test 518 for cement content. For testing purposes, supplementary cementitious material (SCM) shall be considered to be cement. Batch proportions shall be adjusted as necessary to produce concrete having the specified cementitious material content.

If any concrete has a cementitious material, portland cement, or SCM content that is less than the minimum required, the concrete shall be removed. However, if the Engineer determines that the concrete is structurally adequate, the concrete may remain in place and the Contractor shall pay to the State $0.25 for each pound of cementitious material, portland cement, or SCM that is less than the minimum required. The Department may deduct the amount from any moneys due, or that may become due, the Contractor under the contract. The deductions will not be made unless the difference between the contents required and those actually provided exceeds

the batching tolerances permitted by Section 90-5, "Proportioning." No deductions will be made based on the results of California Test 518.

The requirements of the preceding paragraph shall not apply to minor concrete.

90-2 MATERIALS

90-2.01 CEMENTITIOUS MATERIALS

Unless otherwise specified, cementitious material shall be either a combination of Type II or Type V portland cement and SCM, or a blended cement. No cementitious material shall be used in the work unless it is on the Department's Pre-Qualified Products List at the time of mix design submittal. Information regarding cementitious material qualification and placement on the Department's approved list can be obtained at the Transportation Laboratory.

Cementitious materials used in cast-in-place concrete for exposed surfaces of like elements of a structure shall be from the same sources and of the same proportions.

Cementitious materials shall be protected from moisture until used. Sacked cementitious materials shall be piled to permit access for tallying, inspecting, and identifying each shipment.

Facilities shall be provided to ensure that the various cementitious materials meeting this Section 90-2.01 are kept separate from each other and from other cementitious materials. A storage silo containing a cementitous material shall be emptied before using that silo for a different cementitious material. Blended cements with a percentage of SCM differing by more than 2 percentage points are considered different cementitious materials. Sampling cementitious materials shall be in conformance with California Test 125.

The Contractor shall furnish a Certificate of Compliance for cementitious materials in conformance with the provisions in Section 6-1.07, "Certificates of Compliance." The Certificate of Compliance shall indicate the source by name and location (including country, state, and city). If cementitious material is delivered directly to the job site, the Certificate of Compliance shall be signed by the cementitious material supplier. If the cementitious material is used in ready-mixed concrete or in precast concrete products purchased as such by the Contractor, the Certificate of Compliance shall be signed by the manufacturer of the concrete or product. If blended cement is used, the Certificate of Compliance shall include a statement signed by the blended cement supplier that indicates the actual percentage, by weight, of SCM in the blend. Weight of SCM shall be by weighing device conforming to Section 9-1.01, "Measurement of Quantities," or as determined by chemical analysis.

90-2.01A Cement

Portland cement shall conform to the requirements in ASTM Designation: C 150 except the C_3S content of Type II cement shall not exceed 65 percent.

Blended cement shall conform to the requirements for Portland Blast-Furnace Slag Cement, Type IS (MS) or Portland-Pozzolan Cement, Type IP (MS) in AASHTO Designation: M 240, except that the maximum limits on the pozzolan content shall not apply. Blended cement shall be comprised of Type II or Type V cement and SCM produced by intergrinding portland cement clinker and granulated blast furnace slag, ground granulated blast furnace slag (GGBFS), or pozzolan; by blending portland cement and either GGBFS or finely divided pozzolan; or by a combination of intergrinding and blending.

In addition, Type II portland cement and Type V portland cement shall conform to the following requirements:

A. The cement shall not contain more than 0.60-percent by mass of alkalies, calculated as the percentage of Na_2O plus 0.658 times the percentage of K_2O, when determined by methods as required in AASHTO Designation: T 105; and
B. The autoclave expansion shall not exceed 0.50-percent

Type III portland cement shall be used only as specified or with the approval of the Engineer. Type III portland cement shall conform to the additional requirements listed above for Type II portland cement. The Contractor may use Type III portland cement in the manufacturing of precast concrete.

90-2.01B Supplementary Cementitious Materials

Each supplementary cementitious material shall conform to one of the following:

A. Fly ash conforming to the requirements in AASHTO Designation: M 295, Class F, and these specifications. The available alkali, as sodium oxide equivalent, shall not exceed 1.5 percent when determined in conformance with the requirements in ASTM Designation: C 311 or the total alkali, as

sodium oxide equivalent, shall not exceed 5.0 percent when determined in conformance with the requirements in AASHTO Designation: T 105.

B. Ultra fine fly ash (UFFA) conforming to the requirements in AASHTO Designation: M 295, Class F, and the following chemical and physical requirements:

Chemical Requirements	Percent
Sulfur Trioxide (SO_3)	1.5 max.
Loss on ignition	1.2 max.
Available Alkalies (as Na_2O) equivalent	1.5 max.

Physical Requirements	Percent
Particle size distribution	
Less than 3.5 microns	50
Less than 9.0 microns	90
Strength Activity Index with portland cement	
7 days	95 (minimum % of control)
28 days	110 (minimum % of control)
Expansion at 16 days when testing job materials in conformance with ASTM C 1567*	0.10 max.

* In the test mix, Type II or Type V portland cement shall be replaced with at least 12% UFFA by weight.

C. Raw or calcined natural pozzolans conforming to the requirements in AASHTO Designation: M 295, Class N. and the following requirements and these specifications. The available alkali, as sodium oxide equivalent, shall not exceed 1.5 percent when determined in conformance with the requirements in ASTM Designation: C 311 or the total alkali, as sodium oxide equivalent, shall not exceed 5.0 percent when determined in conformance with the requirements in AASHTO Designation: T 105.

D. Metakaolin conforming to the requirements in AASHTO Designation: M 295, Class N, and the following chemical and physical requirements:

Chemical Requirements	Percent
Silicon Dioxide (SiO_2) + Aluminum Oxide (Al_2O_3)	92.0 min.
Calcium Oxide (CaO)	1.0 max
Sulfur Trioxide (SO_3)	1.0 max.
Loss on ignition	1.2 max.
Available Alkalies (as Na_2O) equivalent	1.0 max.

Physical Requirements	Percent
Particle size distribution Less than 45 microns	95
Strength Activity Index with portland cement 7 days 28 days	 100 (minimum % of control) 100 (minimum % of control)

E. Ground Granulated Blast Furnace Slag (GGBFS) conforming to the requirements in AASHTO Designation: M 302, Grade 100 or Grade 120.

F. Silica Fume conforming to the requirements of AASHTO Designation: M 307, with reduction in mortar expansion of 80 percent, minimum, using the cement from the proposed mix design.

Commingling of fly ash from different sources at uncontrolled ratios is permissible only if the following criteria are satisfied:

A. Sources of fly ash to be commingled shall each produce fly ash that conforms to the requirements in AASHTO Designation: M 295, Class F.

B. Testing of the commingled product is the responsibility of the fly ash supplier.

C. Each fly ash's running average of relative density shall not differ from any other by more than 0.25 at the time of commingling.
D. Each fly ash's running average of loss on ignition shall not differ from any other by more than one percent at the time of commingling.
E. The final product of commingled fly ash shall conform to the requirements in AASHTO Designation: M 295, Class F.

90-2.01C Required Use Of Supplementary Cementitious Materials

General

The amount of portland cement and SCM used in portland cement concrete shall conform to the minimum cementitious material content provisions in Section 90-1.01, "Description," or Section 90-4.05, "Optional Use of Chemical Admixtures," and these specifications.

The SCM content in portland cement concrete shall conform to one of the following:

A. Any combination of portland cement and at least one SCM, satisfying Equations (1) and (2):

Equation (1)

$$\frac{(25 \times UF) + (12 \times FA) + (10 \times FB) + (6 \times SL)}{MC} \geq X$$

Where:

UF = Silica fume, metakaolin, or UFFA, including the amount in blended cement, pounds per cubic yard.
FA = Fly ash or natural pozzolan conforming to the requirements in AASHTO Designation: M 295, Class F or N with a CaO content up to 10 percent, including the amount in blended cement, pounds per cubic yard.
FB = Fly ash or natural pozzolan conforming to the requirements in AASHTO Designation: M 295, Class F or N with a CaO content greater than 10 percent and up to 15 percent, including the amount in blended cement, pounds per cubic yard.
SL = GGBFS, including the amount in blended cement, pounds per cubic yard.
MC = Minimum amount of cementitious material specified, pounds per cubic yard.
X = 1.8 for innocuous aggregate, 3.0 for all other aggregate.

Equation (2)

$$MC - MSCM - PC \geq 0$$

Where:

MC = Minimum amount of cementitious material specified, pounds per cubic yard.
MSCM = The minimum sum of SCMs that satisfies Equation (1) above, pounds per cubic yard.
PC = The amount of portland cement, including the amount in blended cement, pounds per cubic yard.

B. 15 percent of Class F fly ash with at least 48 ounces of $LiNO_3$ solution added per 100 pounds of portland cement. CaO content of the fly ash shall not exceed 15 percent.

Precast Concrete

The SCM content in precast portland cement concrete shall conform to one of the following:

A. Any combination of portland cement and SCM, satisfying the following equation:

Equation (3)

$$\frac{(25 \times UF) + (12 \times FA) + (10 \times FB) + (6 \times SL)}{TC} \geq X$$

Where:

UF = Silica fume, metakaolin, or UFFA, including the amount in blended cement, pounds per cubic yard.
FA = Fly ash or natural pozzolan conforming to the requirements in AASHTO Designation: M 295, Class F or N with a CaO content up to 10 percent, including the amount in blended cement, pounds per cubic yard.
FB = Fly ash or natural pozzolan conforming to the requirements in AASHTO Designation: M 295, Class F or N with a CaO content greater than 10 percent and up to 15 percent, including the amount in blended cement, pounds per cubic yard.
SL = GGBFS, including the amount in blended cement, pounds per cubic yard.
TC = Total amount of cementitious material used in the mix, pounds per cubic yard.
X = 0.0 if precast members are constructed with portland cement concrete using aggregate that is "innocuous" in conformance with the provisions in Section 90-2.02, "Aggregates."
X = 3.0 for all other aggregate.

B. 15 percent of Class F fly ash with at least 48 ounces of $LiNO_3$ solution added per 100 pounds of portland cement. CaO content of the fly ash shall not exceed 15 percent.
C. Any combination of supplementary cementitious material and portland cement may be used if the expansion of cementitious material and aggregate does not exceed 0.10 percent when tested in conformance with the requirements in ASTM C 1567. Test data shall be submitted with each mix design. Test data accepted by the Engineer no more than 3 years prior to the first working day of this contract will be acceptable for this entire contract, provided the data was for the same concrete mix and the same materials and material sources to be used on this contract.

90-2.02 AGGREGATES

To be considered innocuous, aggregate must be on the Department's approved list, "Innocuous Aggregates for use in Concrete." Information regarding aggregate qualification and placement on the Department's approved list can be obtained at the Transportation Laboratory.

Both coarse and fine aggregate must be on the approved list for the aggregate used in concrete to be considered innocuous.

Aggregates shall be free from deleterious coatings, clay balls, roots, bark, sticks, rags, and other extraneous material.

The Contractor shall provide safe and suitable facilities, including necessary splitting devices for obtaining samples of aggregates, in conformance with California Test 125.

Aggregates shall be of such character that it will be possible to produce workable concrete within the limits of water content provided in Section 90-6.06, "Amount of Water and Penetration."

Aggregates shall have not more than 10 percent loss when tested for soundness in conformance with the requirements in California Test 214. The soundness requirement for fine aggregate will be waived, provided that the durability index, D_f, of the fine aggregate is 60 or greater when tested for durability in conformance with California Test 229.

If the results of any one or more of the Cleanness Value, Sand Equivalent, or aggregate grading tests do not meet the requirements specified for "Operating Range" but all meet the "Contract Compliance" requirements, the placement of concrete shall be suspended at the completion of the current pour until tests or other information indicate that the next material to be used in the work will comply with the requirements specified for "Operating Range."

If the results of either or both the Cleanness Value and coarse aggregate grading tests do not meet the requirements specified for "Contract Compliance," the concrete that is represented by the tests shall be removed. However, if the Engineer determines that the concrete is structurally adequate, the concrete may remain in place, and the Contractor shall pay to the State $3.50 per cubic yard for paving concrete and $5.50 per cubic yard for all other concrete for the concrete represented by these tests and left in place. The Department may deduct the amount from any moneys due, or that may become due, the Contractor under the contract.

If the results of either or both the Sand Equivalent and fine aggregate grading tests do not meet the requirements specified for "Contract Compliance," the concrete which is represented by the tests shall be removed. However, if

the Engineer determines that the concrete is structurally adequate, the concrete may remain in place, and the Contractor shall pay to the State $3.50 per cubic yard for paving concrete and $5.50 per cubic yard for all other concrete for the concrete represented by these tests and left in place. The Department may deduct the amount from any moneys due, or that may become due, the Contractor under the contract.

The 2 preceding paragraphs apply individually to the "Contract Compliance" requirements for coarse aggregate and fine aggregate. When both coarse aggregate and fine aggregate do not conform to the "Contract Compliance" requirements, both paragraphs shall apply. The payments specified in those paragraphs are in addition to any payments made in conformance with the provisions in Section 90-1.01, "Description."

No single Cleanness Value, Sand Equivalent, or aggregate grading test shall represent more than 300 cubic yards of concrete or one day's pour, whichever is smaller.

When the source of an aggregate is changed, the Contractor shall adjust the mix proportions and submit in writing to the Engineer a copy of the mix design before using the aggregates.

90-2.02A Coarse Aggregate

Coarse aggregate shall consist of gravel, crushed gravel, crushed rock, reclaimed aggregate, crushed air-cooled iron blast furnace slag or combinations thereof. Crushed air-cooled blast furnace slag shall not be used in reinforced or prestressed concrete.

Reclaimed aggregate is aggregate that has been recovered from plastic concrete by washing away the cementitious material. Reclaimed aggregate shall conform to all aggregate requirements.

Coarse aggregate shall conform to the following quality requirements:

Tests	California Test	Requirements
Loss in Los Angeles Rattler (after 500 revolutions)	211	45% max.
Cleanness Value		
Operating Range	227	75 min.
Contract Compliance	227	71 min.

In lieu of the above Cleanness Value requirements, a Cleanness Value "Operating Range" limit of 71, minimum, and a Cleanness Value "Contract Compliance" limit of 68, minimum, will be used to determine the acceptability of the coarse aggregate if the Contractor furnishes a Certificate of Compliance, as provided in Section 6-1.07, "Certificates of Compliance," certifying that:

A. Coarse aggregate sampled at the completion of processing at the aggregate production plant had a Cleanness Value of not less than 82 when tested in conformance with the requirements in California Test 227; and
B. Prequalification tests performed in conformance with the requirements in California Test 549 indicated that the aggregate would develop a relative strength of not less than 95 percent and would have a relative shrinkage not greater than 105 percent, based on concrete.

90-2.02B Fine Aggregate

Fine aggregate shall consist of natural sand, manufactured sand produced from larger aggregate or a combination thereof. Manufactured sand shall be well graded.

Fine aggregate shall conform to the following quality requirements:

Test	California Test	Requirements
Organic Impurities	213	Satisfactory[a]
Sand Equivalent:		
Operating Range	217	75, min.
Contract Compliance	217	71, min.

[a] Fine aggregate developing a color darker than the reference standard color may be accepted if 95% relative mortar strength is achieved when tested in conformance with ASTM C87.

In lieu of the above Sand Equivalent requirements, a Sand Equivalent "Operating Range" limit of 71, minimum, and a Sand Equivalent "Contract Compliance" limit of 68, minimum, will be used to determine the acceptability of the fine aggregate if the Contractor furnishes a Certificate of Compliance, as provided in Section 6-1.07, "Certificates of Compliance," certifying that:

A. Fine aggregate sampled at the completion of processing at the aggregate production plant had a Sand Equivalent value of not less than 82 when tested by California Test 217; and
B. Prequalification tests performed in conformance with California Test 549 indicated that the aggregate would develop a relative strength of not less than 95 percent and would have a relative shrinkage not greater than 105 percent, based on concrete.

90-2.03 WATER

In conventionally reinforced concrete work, the water for curing, for washing aggregates, and for mixing shall be free from oil and shall not contain more than 1,000 parts per million of chlorides as Cl, when tested in conformance with California Test 422, nor more than 1,300 parts per million of sulfates as SO_4, when tested in conformance with California Test 417. In prestressed concrete work, the water for curing, for washing aggregates, and for mixing shall be free from oil and shall not contain more than 650 parts per million of chlorides as Cl, when tested in conformance with California Test 422, nor more than 1,300 parts per million of sulfates as SO_4, when tested in conformance with California Test 417. In no case shall the water contain an amount of impurities that will cause either of the following results when compared to the same test using distilled or deionized water: 1) a change in the setting time of cement of more than 25 percent when tested in conformance with the requirements in ASTM Designation: C 191 or ASTM Designation: C 266 or 2) a reduction in the compressive strength of mortar at 14 days of more than 5 percent, when tested in conformance with the requirements in ASTM Designation: C 109.

In nonreinforced concrete work, the water for curing, for washing aggregates and for mixing shall be free from oil and shall not contain more than 2,000 parts per million of chlorides as Cl, when tested in conformance with California Test 422, or more than 1,500 parts per million of sulfates as SO_4, when tested in conformance with California Test 417.

In addition to the above provisions, water for curing concrete shall not contain impurities in a sufficient amount to cause discoloration of the concrete or produce etching of the surface.

Water reclaimed from mixer wash-out operations may be used in mixing concrete. The water shall not contain coloring agents or more than 300 parts per million of alkalis (Na_2O + 0.658 K_2O) as determined on the filtrate. The specific gravity of the water shall not exceed 1.03 and shall not vary more than ±0.010 during a day's operations.

90-2.04 Admixture Materials

Admixture materials shall be stored and dispensed in liquid form and conform to the following requirements:

A. Chemical Admixtures—ASTM Designation: C 494.
B. Air-entraining Admixtures—ASTM Designation: C 260.
C. Lithium Nitrate shall be in an aqueous solution conforming to the following:

   1. Lithium Nitrate ($LiNO_3$) must be 30 percent +/- 0.5 percent by weight
   2. Sulfate (SO_4) must be less than 1000 ppm
   3. Chloride (Cl) must be less than 1000 ppm
   4. Alkalis (Na_2O + 0.658 K_2O) must be less than 1000 ppm

90-3 AGGREGATE GRADINGS

90-3.01 GENERAL

Before beginning concrete work, the Contractor shall submit in writing to the Engineer the gradation of the primary aggregate nominal sizes that the Contractor proposes to furnish. If a primary coarse aggregate or the fine aggregate is separated into 2 or more sizes, the proposed gradation shall consist of the gradation for each individual size, and the proposed proportions of each individual size, combined mathematically to indicate one proposed gradation. The proposed gradation shall meet the grading requirements shown in the table in this section, and shall show the percentage passing each of the sieve sizes used in determining the end result.

The Engineer may waive, in writing, the gradation requirements in this Section 90-3.01 and in Sections 90-3.02, "Coarse Aggregate Grading," 90-3.03, "Fine Aggregate Grading," and 90-3.04, "Combined Aggregate Gradings," if, in the Engineer's opinion, furnishing the gradation is not necessary for the type or amount of concrete work to be constructed.

Gradations proposed by the Contractor shall be within the following percentage passing limits:

Primary Aggregate Nominal Size	Sieve Size	Limits of Proposed Gradation
1-1/2" x 3/4"	1"	19 - 41
1" x No. 4	3/4"	52 - 85
1" x No. 4	3/8"	15 - 38
1/2" x No. 4	3/8"	40 - 78
3/8" x No. 8	3/8"	50 - 85
Fine Aggregate	No. 16	55 - 75
Fine Aggregate	No. 30	34 - 46
Fine Aggregate	No. 50	16 - 29

Should the Contractor change the source of supply, the Contractor shall submit in writing to the Engineer the new gradations before their intended use.

90-3.02 COARSE AGGREGATE GRADING

The grading requirements for coarse aggregates are shown in the following table for each size of coarse aggregate:

	Percentage Passing Primary Aggregate Nominal Sizes							
	1-1/2" x 3/4"		1" x No. 4		1/2" x No. 4		3/8" x No. 8	
Sieve Sizes	Operating Range	Contract Compliance	Operating Range	Contract Compliance	Operating Range	Contract Compliance	Operating Range	Contract Compliance
2"	100	100	—	—	—	—	—	—
1-1/2"	88 - 100	85 - 100	100	100	—	—	—	—
1"	X ±18	X ±25	88 - 100	86 - 100	—	—	—	—
3/4"	0 - 17	0 - 20	X ±15	X ±22	100	100	—	—
1/2"	—	—	—	—	82 - 100	80 - 100	100	100
3/8"	0 - 7	0 - 9	X ±15	X ±22	X ±15	X ±22	X ±15	X ±20
No. 4	—	—	0 - 16	0 - 18	0 - 15	0 - 18	0 - 25	0 - 28
No. 8	—	—	0 - 6	0 - 7	0 - 6	0 - 7	0 - 6	0 - 7

In the above table, the symbol X is the gradation that the Contractor proposes to furnish for the specific sieve size as provided in Section 90-3.01, "General."

Coarse aggregate for the 1-1/2 inch, maximum, combined aggregate grading as provided in Section 90-3.04, "Combined Aggregate Gradings," shall be furnished in 2 or more primary aggregate nominal sizes. Each primary aggregate nominal size may be separated into 2 sizes and stored separately, provided that the combined material conforms to the grading requirements for that particular primary aggregate nominal size.

When the one inch, maximum, combined aggregate grading as provided in Section 90-3.04, "Combined Aggregate Gradings," is to be used, the coarse aggregate may be separated into 2 sizes and stored separately, provided that the combined material shall conform to the grading requirements for the 1" x No. 4 primary aggregate nominal size.

90-3.03 FINE AGGREGATE GRADING

Fine aggregate shall be graded within the following limits:

Sieve Sizes	Percentage Passing	
	Operating Range	Contract Compliance
3/8"	100	100
No. 4	95 - 100	93 - 100
No. 8	65 - 95	61 - 99
No. 16	X ±10	X ±13
No. 30	X ±9	X ±12
No. 50	X ±6	X ±9
No. 100	2 - 12	1 - 15
No. 200	0 - 8	0 - 10

In the above table, the symbol X is the gradation that the Contractor proposes to furnish for the specific sieve size as provided in Section 90-3.01, "General."

In addition to the above required grading analysis, the distribution of the fine aggregate sizes shall be such that the difference between the total percentage passing the No. 16 sieve and the total percentage passing the No. 30 sieve shall be between 10 and 40, and the difference between the percentage passing the No. 30 and No. 50 sieves shall be between 10 and 40.

Fine aggregate may be separated into 2 or more sizes and stored separately, provided that the combined material conforms to the grading requirements specified in this Section 90-3.03.

90-3.04 COMBINED AGGREGATE GRADINGS

Combined aggregate grading limits shall be used only for the design of concrete mixes. Concrete mixes shall be designed so that aggregates are combined in proportions that shall produce a mixture within the grading limits for combined aggregates as specified herein.

The combined aggregate grading, except when otherwise specified in these specifications or the special provisions, shall be either the 1-1/2 inch, maximum grading, or the 1 inch, maximum grading, at the option of the Contractor.

Grading Limits of Combined Aggregates

Sieve Sizes	Percentage Passing			
	1-1/2" Max.	1" Max.	1/2" Max.	3/8" Max.
2"	100	—	—	—
1-1/2"	90 - 100	100	—	—
1"	50 - 86	90 - 100	—	—
3/4"	45 - 75	55 - 100	100	—
1/2"	—	—	90 - 100	100
3/8"	38 - 55	45 - 75	55 - 86	50 - 100
No. 4	30 - 45	35 - 60	45 - 63	45 - 63
No. 8	23 - 38	27 - 45	35 - 49	35 - 49
No. 16	17 - 33	20 - 35	25 - 37	25 - 37
No. 30	10 - 22	12 - 25	15 - 25	15 - 25
No. 50	4 - 10	5 - 15	5 - 15	5 - 15
No. 100	1 - 6	1 - 8	1 - 8	1 - 8
No. 200	0 - 3	0 - 4	0 - 4	0 - 4

Changes from one grading to another shall not be made during the progress of the work unless permitted by the Engineer.

90-4 ADMIXTURES

90-4.01 GENERAL

Admixtures used in portland cement concrete shall conform to and be used in conformance with the provisions in this Section 90-4 and the special provisions. Admixtures shall be used when specified or ordered by the Engineer and may be used at the Contractor's option as provided herein.

Chemical admixtures and air-entraining admixtures containing chlorides as Cl in excess of one percent by weight of admixture, as determined by California Test 415, shall not be used.

Admixtures shall be uniform in properties throughout their use in the work. Should it be found that an admixture as furnished is not uniform in properties, its use shall be discontinued.

If more than one admixture is used, the admixtures shall be compatible with each other so that the desirable effects of all admixtures used will be realized.

Chemical admixtures shall be used in conformance with the manufacturer's written recommendations. The manufacturer's written recommendations shall include a statement that the admixtures are compatible with the types and amounts of SCMs used.

90-4.02 MATERIALS

Admixture materials shall conform to the provisions in Section 90-2.04, "Admixture Materials."

90-4.03 ADMIXTURE APPROVAL

No admixture brand shall be used in the work unless it is on the Department's current list of approved brands for the type of admixture involved. Information regarding admixture qualification and placement on the Department's list can be obtained at the Transportation Laboratory.

If the Contractor proposes to use an admixture of a brand and type on the current list of approved admixture brands, the Contractor shall furnish a Certificate of Compliance from the manufacturer, as provided in Section 6-1.07, "Certificates of Compliance," certifying that the admixture furnished is the same as that previously approved. If a previously approved admixture is not accompanied by a Certificate of Compliance, the admixture shall not be used in the work until the Engineer has had sufficient time to make the appropriate tests and has approved the admixture for use. The Engineer may take samples for testing at any time, whether or not the admixture has been accompanied by a Certificate of Compliance.

90-4.04 REQUIRED USE OF CHEMICAL ADMIXTURES

If the use of a chemical admixture is specified, the admixture shall be used at the dosage specified, except that if no dosage is specified, the admixture shall be used at the dosage normally recommended by the manufacturer of the admixture.

90-4.05 OPTIONAL USE OF CHEMICAL ADMIXTURES

The Contractor may use Type A or F, water-reducing; Type B, retarding; or Type D or G, water-reducing and retarding admixtures as described in ASTM Designation: C 494 to conserve cementitious material or to facilitate any concrete construction application subject to the following conditions:

A. If a water-reducing admixture or a water-reducing and retarding admixture is used, the cementitious material content specified or ordered may be reduced by a maximum of 5 percent by weight, except that the resultant cementitious material content shall be not less than 505 pounds per cubic yard; and
B. When a reduction in cementitious material content is made, the dosage of admixture used shall be no less than the dosage used in determining approval of the admixture.

The Contractor may use Type S admixtures conforming to the requirements in ASTM Designation: C 494.

Unless otherwise specified, a Type C accelerating chemical admixture conforming to the requirements in ASTM Designation: C 494, may be used in portland cement concrete. Inclusion in the mix design submitted for approval will not be required provided that the admixture is added to counteract changing conditions that contribute to delayed setting of the portland cement concrete, and the use or change in dosage of the admixture is approved in writing by the Engineer.

90-4.06 REQUIRED USE OF AIR-ENTRAINING ADMIXTURES

When air-entrainment is specified or ordered by the Engineer, the air-entraining admixture shall be used in amounts to produce a concrete having the specified air content as determined by California Test 504.

90-4.07 OPTIONAL USE OF AIR-ENTRAINING ADMIXTURES

When air-entrainment has not been specified or ordered by the Engineer, the Contractor will be permitted to use an air-entraining admixture to facilitate the use of any construction procedure or equipment provided that the average air content, as determined by California Test 504, of 3 successive tests does not exceed 4 percent, and no single test value exceeds 5.5 percent. If the Contractor elects to use an air-entraining admixture in concrete for pavement, the Contractor shall so indicate at the time the Contractor designates the source of aggregate.

90-4.08 BLANK

90-4.09 BLANK

90-4.10 PROPORTIONING AND DISPENSING LIQUID ADMIXTURES

Chemical admixtures and air-entraining admixtures shall be dispensed in liquid form. Dispensers for liquid admixtures shall have sufficient capacity to measure at one time the prescribed quantity required for each batch of concrete. Each dispenser shall include a graduated measuring unit into which liquid admixtures are measured to within ±5 percent of the prescribed quantity for each batch. Dispensers shall be located and maintained so that the graduations can be accurately read from the point at which proportioning operations are controlled to permit a visual check of batching accuracy prior to discharge. Each measuring unit shall be clearly marked for the type and quantity of admixture.

Each liquid admixture dispensing system shall be equipped with a sampling device consisting of a valve located in a safe and readily accessible position such that a sample of the admixture may be withdrawn slowly by the Engineer.

If more than one liquid admixture is used in the concrete mix, each liquid admixture shall have a separate measuring unit and shall be dispensed by injecting equipment located in such a manner that the admixtures are not mixed at high concentrations and do not interfere with the effectiveness of each other. When air-entraining admixtures are used in conjunction with other liquid admixtures, the air-entraining admixture shall be the first to be incorporated into the mix, unless it is demonstrated that a different sequence improves performance.

When automatic proportioning devices are used, dispensers for liquid admixtures shall operate automatically with the batching control equipment. The dispensers shall be equipped with an automatic warning system in good operating condition that will provide a visible or audible signal at the point at which proportioning operations are controlled when the quantity of admixture measured for each batch of concrete varies from the preselected dosage by more than 5 percent, or when the entire contents of the measuring unit are not emptied from the dispenser into each batch of concrete.

Unless liquid admixtures are added to premeasured water for the batch, their discharge into the batch shall be arranged to flow into the stream of water so that the admixtures are well dispersed throughout the batch, except that air-entraining admixtures may be dispensed directly into moist sand in the batching bins provided that adequate control of the air content of the concrete can be maintained.

Liquid admixtures requiring dosages greater than one-half gallon per cubic yard shall be considered to be water when determining the total amount of free water as specified in Section 90-6.06, "Amount of Water and Penetration."

90-4.11 BLANK

90-5 PROPORTIONING

90-5.01 STORAGE OF AGGREGATES

Aggregates shall be stored or stockpiled in such a manner that separation of coarse and fine particles of each size shall be avoided and the various sizes shall not become intermixed before proportioning.

Aggregates shall be stored or stockpiled and handled in a manner that prevent contamination by foreign materials. In addition, storage of aggregates at batching or mixing facilities that are erected subsequent to the award of the contract and that furnish concrete to the project shall conform to the following:

A. Intermingling of the different sizes of aggregates shall be positively prevented. The Contractor shall take the necessary measures to prevent intermingling. The preventive measures may include, but are not necessarily limited to, physical separation of stockpiles or construction of bulkheads of adequate length and height; and
B. Contamination of aggregates by contact with the ground shall be positively prevented. The Contractor shall take the necessary measures to prevent contamination. The preventive measures shall include, but are not necessarily limited to, placing aggregates on wooden platforms or on hardened surfaces consisting of portland cement concrete, asphalt concrete, or cement treated material.

In placing aggregates in storage or in moving the aggregates from storage to the weigh hopper of the batching plant, any method that may cause segregation, degradation, or the combining of materials of different gradings that

will result in any size of aggregate at the weigh hopper failing to meet the grading requirements, shall be discontinued. Any method of handling aggregates that results in excessive breakage of particles shall be discontinued. The use of suitable devices to reduce impact of falling aggregates may be required by the Engineer.

90-5.02 PROPORTIONING DEVICES

Weighing, measuring, or metering devices used for proportioning materials shall conform to the requirements in Section 9-1.01, "Measurement of Quantities," and this Section 90-5.02. In addition, automatic weighing systems shall comply with the requirements for automatic proportioning devices in Section 90-5.03A, "Automatic Proportioning." Automatic devices shall be automatic to the extent that the only manual operation required for proportioning the aggregates, cement, and SCM for one batch of concrete is a single operation of a switch or starter.

For concrete pavement, aggregate and bulk cementitious material must be proportioned by weight by means of automatic proportioning devices.

Proportioning devices shall be tested as frequently as the Engineer may deem necessary to ensure their accuracy.

Weighing equipment shall be insulated against vibration or movement of other operating equipment in the plant. When the plant is in operation, the weight of each batch of material shall not vary from the weight designated by the Engineer by more than the tolerances specified herein.

Equipment for cumulative weighing of aggregate shall have a zero tolerance of ±0.5 percent of the designated total batch weight of the aggregate. For systems with individual weigh hoppers for the various sizes of aggregate, the zero tolerance shall be ±0.5 percent of the individual batch weight designated for each size of aggregate. Equipment for cumulative weighing of cement and SCM shall have a zero tolerance of ±0.5 percent of the designated total batch weight of the cement and SCM. Equipment for weighing cement or SCM separately shall have a zero tolerance of ±0.5 percent of their designated individual batch weights. Equipment for measuring water shall have a zero tolerance of ±0.5 percent of its designated weight or volume.

The weight indicated for any batch of material shall not vary from the preselected scale setting by more than the following:

A. Aggregate weighed cumulatively shall be within 1.0 percent of the designated total batch weight of the aggregate. Aggregates weighed individually shall be within 1.5 percent of their respective designated batch weights; and
B. Cement shall be 99 to 102 percent of its designated batch weight. When weighed individually, SCM shall be 99 to 102 percent of its designated batch weight. When SCM and cement are permitted to be weighed cumulatively, cement shall be weighed first to 99 to 102 percent of its designated batch weight, and the total for cement and SCM shall be 99 to 102 percent of the sum of their designated batch weights When a blended cement is used, the percentages of cement and SCM used for calculating batch weights shall be based on the percentage of SCM indicated in the Certificate of Compliance from the blended cement supplier; and
C. Water shall be within 1.5 percent of its designated weight or volume.

Each scale graduation shall be approximately 0.001 of the total capacity of the scale. The capacity of scales for weighing cement, SCM, or cement plus SCM and aggregates shall not exceed that of commercially available scales having single graduations indicating a weight not exceeding the maximum permissible weight variation above, except that no scale shall be required having a capacity of less than 1,000 pounds, with one pound graduations.

90-5.03 PROPORTIONING

Proportioning shall consist of dividing the aggregates into the specified sizes, each stored in a separate bin, and combining them with cementitious material and water as provided in these specifications. Aggregates shall be proportioned by weight.

At the time of batching, aggregates shall have been dried or drained sufficiently to result in a stable moisture content such that no visible separation of water from aggregate will take place during transportation from the proportioning plant to the point of mixing. In no event shall the free moisture content of the fine aggregate at the time of batching exceed 8 percent of its saturated, surface-dry weight.

Should separate supplies of aggregate material of the same size group, but of different moisture content or specific gravity or surface characteristics affecting workability, be available at the proportioning plant, withdrawals shall be made from one supply exclusively and the materials therein completely exhausted before starting upon another.

Bulk Type IP (MS) or Type IS (MS) cement shall be weighed in an individual hopper and shall be kept separate from the aggregates until the ingredients are released for discharge into the mixer.

Bulk cement and SCM may be weighed in separate, individual weigh hoppers or may be weighed in the same weigh hopper and shall be kept separate from the aggregates until the ingredients are released for discharge into the mixer. If the cement and SCM are weighed cumulatively, the cement shall be weighed first.

If cement and SCM are weighed in separate weigh hoppers, the weigh systems for the proportioning of the aggregate, the cement, and the SCM shall be individual and distinct from all other weigh systems. Each weigh system shall be equipped with a hopper, a lever system, and an indicator to constitute an individual and independent material-weighing device. The cement and the SCM shall be discharged into the mixer simultaneously with the aggregate.

The scales and weigh hoppers for bulk weighing cement, SCM, or cement plus SCM shall be separate and distinct from the aggregate weighing equipment.

For batches of one cubic yard or more, the batching equipment shall conform to one of the following combinations:

A. Separate boxes and separate scale and indicator for weighing each size of aggregate.
B. Single box and scale indicator for all aggregates.
C. Single box or separate boxes and automatic weighing mechanism for all aggregates.

In order to check the accuracy of batch weights, the gross weight and tare weight of batch trucks, truck mixers, truck agitators, and non-agitating hauling equipment shall be determined when ordered by the Engineer. The equipment shall be weighed on scales designated by the Engineer.

90-5.03A Automatic Proportioning

Automatic proportioning devices shall be authorized by the Department.

For concrete pavement, the Contractor shall install and maintain in operating condition an electronically actuated moisture meter that will indicate, on a readily visible scale, changes in the moisture content of the fine aggregate as it is batched within a sensitivity of 0.5 percent by weight of the fine aggregate.

The batching of cement, SCM, or cement plus SCM and aggregate shall be interlocked so that a new batch cannot be started until all weigh hoppers are empty, the proportioning devices are within zero tolerance, and the discharge gates are closed. The interlock shall permit no part of the batch to be discharged until all aggregate hoppers and the cement and SCM hoppers or the cement plus SCM hopper are charged with weights that are within the tolerances specified in Section 90-5.02, "Proportioning Devices."

If interlocks are required for cement and SCM charging mechanisms and cement and SCM are weighed cumulatively, their charging mechanisms shall be interlocked to prevent the introduction of SCM until the weight of cement in the cement weigh hopper is within the tolerances specified in Section 90-5.02, "Proportioning Devices."

If concrete is completely mixed in stationary mixers, the SCMs shall be weighed in a separate weigh hopper and the SCM and cement shall be introduced simultaneously into the mixer proportionately with the aggregate. If the Contractor provides certification that the stationary mixer is capable of mixing the cement, SCM, aggregates, and water uniformly before discharge, weighing the SCM cumulatively with the cement is permitted. Certification shall contain the following:

A. Test results for 2 compressive strength test cylinders of concrete taken within the first one-third and 2 compressive strength test cylinders of concrete taken within the last one-third of the concrete discharged from a single batch from the stationary mixer. Strength tests and cylinder preparation will be in conformance with the provisions of Section 90-9, "Compressive Strength";
B. Calculations demonstrating that the difference in the averages of 2 compressive strengths taken in the first one-third is no greater than 7.5 percent different than the averages of 2 compressive strengths taken in the last one-third of the concrete discharged from a single batch from the stationary mixer. Strength tests and cylinder preparation will be in conformance with the provisions of Section 90-9, "Compressive Strength;" and
C. The mixer rotation speed and time of mixing before discharge that are required to produce a mix that meets the requirements above.

The discharge gate on the cement and SCM hoppers or the cement plus SCM hopper shall be designed to permit regulating the flow of cement, SCM, or cement plus SCM into the aggregate as directed by the Engineer.

If separate weigh boxes are used for each size of aggregate, the discharge gates shall permit regulating the flow of each size of aggregate as directed by the Engineer.

Material discharged from the several bins shall be controlled by gates or by mechanical conveyors. The means of withdrawal from the several bins, and of discharge from the weigh box, shall be interlocked so that not more than one bin can discharge at a time, and so that the weigh box cannot be tripped until the required quantity from each of the several bins has been deposited therein. Should a separate weigh box be used for each size of aggregate, all may be operated and discharged simultaneously.

If the discharge from the several bins is controlled by gates, each gate shall be actuated automatically so that the required weight is discharged into the weigh box, after which the gate shall automatically close and lock.

The automatic weighing system shall be designed so that all proportions required may be set on the weighing controller at the same time.

90-6 MIXING AND TRANSPORTING

90-6.01 GENERAL

Concrete shall be mixed in mechanically operated mixers, except that when permitted by the Engineer, batches not exceeding 1/3 cubic yard may be mixed by hand methods in conformance with the provisions in Section 90-6.05, "Hand-Mixing."

Equipment having components made of aluminum or magnesium alloys that would have contact with plastic concrete during mixing, transporting, or pumping of portland cement concrete shall not be used.

Concrete shall be homogeneous and thoroughly mixed, and there shall be no lumps or evidence of undispersed cementitious material.

Uniformity of concrete mixtures will be determined by differences in penetration as determined by California Test 533, or slump as determined by ASTM Designation: C 143, and by variations in the proportion of coarse aggregate as determined by California Test 529.

When the mix design specifies a penetration value, the difference in penetration, determined by comparing penetration tests on 2 samples of mixed concrete from the same batch or truck mixer load, shall not exceed 1/2 inch. When the mix design specifies a slump value, the difference in slump, determined by comparing slump tests on 2 samples of mixed concrete from the same batch or truck mixer load, shall not exceed the values given in the table below. Variation in the proportion of coarse aggregate will be determined by comparing the results of tests of 2 samples of mixed concrete from the same batch or truck mixer load and the difference between the 2 results shall not exceed 170 pounds per cubic yard of concrete.

Average Slump	Maximum Permissible Difference
Less than 4"	1"
4" to 6"	1-1/2"
Greater than 6" to 9"	2"

The Contractor shall furnish samples of the freshly mixed concrete and provide satisfactory facilities for obtaining the samples.

90-6.02 MACHINE MIXING

Concrete mixers may be of the revolving drum or the revolving blade type, and the mixing drum or blades shall be operated uniformly at the mixing speed recommended by the manufacturer. Mixers and agitators that have an accumulation of hard concrete or mortar shall not be used.

The temperature of mixed concrete, immediately before placing, shall be not less than 50 °F or more than 90 °F. Aggregates and water shall be heated or cooled as necessary to produce concrete within these temperature limits. Neither aggregates nor mixing water shall be heated to exceed 150 °F. If ice is used to cool the concrete, discharge of the mixer will not be permitted until all ice is melted.

The batch shall be so charged into the mixer that some water will enter in advance of cementitious materials and aggregates. All water shall be in the drum by the end of the first one-fourth of the specified mixing time. When concrete is delivered in a truck mixer, a portion of the mixing water may be withheld and, if allowed by the Engineer, may be added at the point of delivery as specified under Section 90-6.03, "Transporting Mixed Concrete."

Cementitious materials shall be batched and charged into the mixer by means that will not result either in loss of cementitious materials due to the effect of wind, in accumulation of cementitious materials on surfaces of conveyors or hoppers, or in other conditions that reduce or vary the required quantity of cementitious material in the concrete mixture.

Stationary mixers shall be operated with an automatic timing device. The timing device and discharge mechanism shall be interlocked so that during normal operation no part of the batch will be discharged until the specified mixing time has elapsed.

The total elapsed time between the intermingling of damp aggregates and all cementitious materials and the start of mixing shall not exceed 30 minutes.

The size of batch shall not exceed the manufacturer's guaranteed capacity.

When producing concrete for pavement or base, suitable batch counters shall be installed and maintained in good operating condition at job site batching plants and stationary mixers. The batch counters shall indicate the exact number of batches proportioned and mixed.

Concrete shall be mixed and delivered to the job site by means of one of the following combinations of operations:

A. Mixed completely in a stationary mixer and the mixed concrete transported to the point of delivery in truck agitators or in nonagitating hauling equipment (central-mixed concrete).
B. Mixed partially in a stationary mixer, and the mixing completed in a truck mixer (shrink-mixed concrete).
C. Mixed completely in a truck mixer (transit-mixed concrete).

Agitators may be truck mixers operating at agitating speed or truck agitators. Each mixer and agitator shall have attached thereto in a prominent place a metal plate or plates on which is plainly marked the various uses for which the equipment is designed, the manufacturer's guaranteed capacity of the drum or container in terms of the volume of mixed concrete and the speed of rotation of the mixing drum or blades.

Truck mixers shall be equipped with electrically or mechanically actuated revolution counters by which the number of revolutions of the drum or blades may readily be verified.

When shrink-mixed concrete is furnished, concrete that has been partially mixed at a central plant shall be transferred to a truck mixer and all requirements for transit-mixed concrete shall apply. No credit in the number of revolutions at mixing speed will be allowed for partial mixing in a central plant.

90-6.03 TRANSPORTING MIXED CONCRETE

Mixed concrete may be transported to the delivery point in truck agitators or truck mixers operating at the speed designated by the manufacturer of the equipment as agitating speed, or in non-agitating hauling equipment, provided the consistency and workability of the mixed concrete upon discharge at the delivery point is suitable for adequate placement and consolidation in place, and provided the mixed concrete after hauling to the delivery point conforms to the provisions in Section 90-6.01, "General."

Truck agitators shall be loaded not to exceed the manufacturer's guaranteed capacity and shall maintain the mixed concrete in a thoroughly mixed and uniform mass during hauling.

Bodies of nonagitating hauling equipment shall be constructed so that leakage of the concrete mix, or any part thereof, will not occur at any time.

Concrete hauled in open-top vehicles shall be protected during hauling against rain or against exposure to the sun for more than 20 minutes when the ambient temperature exceeds 75 °F.

No water in excess of that in the approved mix design shall be incorporated into the concrete. If approved by the Engineer, water withheld during batching may be added to the concrete at the delivery point in one operation before the discharge of more than 1/4 cubic yard. Equipment for supplying the water shall conform to Section 90-6.06, "Amount of Water and Penetration." When water is added at the point of delivery, the drum shall be revolved not less than 30 revolutions at mixing speed after the water is added and before discharged is commenced.

The rate of discharge of mixed concrete from a truck mixer or agitator shall be controlled by the speed of rotation of the drum in the discharge direction with the discharge gate fully open.

If a truck mixer or agitator is used for transporting concrete to the delivery point, discharge shall be completed within 1.5 hours or before 250 revolutions of the drum or blades, whichever occurs first, after the introduction of the cementitious materials to the aggregates. Under conditions contributing to quick stiffening of the concrete, or if the temperature of the concrete is 85 °F or above, the time allowed may be less than 1.5 hours. If an admixture is used to retard the set time, the temperature of the concrete shall not exceed 85 °F, the time limit shall be 2 hours, and the revolution limitation shall be 300.

If nonagitating hauling equipment is used for transporting concrete to the delivery point, discharge shall be completed within one hour after the addition of the cementitious materials to the aggregates. Under conditions contributing to quick stiffening of the concrete, or when the temperature of the concrete is 85 °F or above, the time between the introduction of cementitious materials to the aggregates and discharge shall not exceed 45 minutes.

Each load of concrete delivered at the job site shall be accompanied by a weighmaster certificate showing the mix identification number, nonrepeating load number, date and time at which the materials were batched, the total amount of water added to the load, and for transit-mixed concrete, the reading of the revolution counter at the time the truck mixer is charged with cement. This weighmaster certificate shall also show the actual scale weights (pounds) for the ingredients batched. Theoretical or target batch weights shall not be used as a substitute for actual scale weights.

Weighmaster certificates shall be provided in printed form, or if approved by the Engineer, the data may be submitted in electronic media. Electronic media shall be presented in a tab-delimited format on a CD or DVD. Captured data, for the ingredients represented by each batch shall be "line feed, carriage return" (LFCR) and "one line, separate record" with allowances for sufficient fields to satisfy the amount of data required by these specifications.

The Contractor may furnish a weighmaster certificate accompanied by a separate certificate that lists the actual batch weights or measurements for a load of concrete provided that both certificates are imprinted with the same nonrepeating load number that is unique to the contract and delivered to the jobsite with the load.

Weighmaster certificates furnished by the Contractor shall conform to the provisions in Section 9-1.01, "Measurement of Quantities."

90-6.04 TIME OR AMOUNT OF MIXING

Mixing of concrete in stationary mixers shall continue for the required mixing time after all ingredients, except water and admixture, if added with the water, are in the mixing compartment of the mixer before any part of the batch is released. Transfer time in multiple drum mixers shall not be counted as part of the required mixing time.

The required mixing time, in stationary mixers, of concrete used for concrete structures, except minor structures, shall be not less than 90 seconds or more than 5 minutes, except that when directed by the Engineer in writing, the requirements of the following paragraph shall apply.

The required mixing time in stationary mixers, except as provided in the preceding paragraph, shall be not less than 50 seconds or more than 5 minutes.

The minimum required revolutions at the mixing speed for transit-mixed concrete shall not be less than that recommended by the mixer manufacturer, but in no case shall the number of revolutions be less than that required to consistently produce concrete conforming to the provisions for uniformity in Section 90-6.01, "General."

When a high range water-reducing admixture is added to the concrete at the job site, the total number of revolutions shall not exceed 300.

90-6.05 HAND-MIXING

Hand-mixed concrete shall be made in batches of not more than 1/3 cubic yard and shall be mixed on a watertight, level platform. The proper amount of coarse aggregate shall be measured in measuring boxes and spread on the platform and the fine aggregate shall be spread on this layer, the 2 layers being not more than one foot in total depth. On this mixture shall be spread the dry cementitious materials and the whole mass turned no fewer than 2 times dry; then sufficient clean water shall be added, evenly distributed, and the whole mass again turned no fewer than 3 times, not including placing in the carriers or forms.

90-6.06 AMOUNT OF WATER AND PENETRATION

The amount of water used in concrete mixes shall be regulated so that the penetration of the concrete as determined by California Test 533 or the slump of the concrete as determined by ASTM Designation: C 143 is within the nominal values shown in the following table. When the penetration or slump of the concrete is found to exceed the nominal values listed, the mixture of subsequent batches shall be adjusted to reduce the penetration or slump to a value within the nominal range shown. Batches of concrete with a penetration or slump exceeding the maximum values listed shall not be used in the work. If Type F or Type G chemical admixtures are added to the mix, the penetration requirements shall not apply and the slump shall not exceed 9 inches after the chemical admixtures are added.

Type of Work	Nominal		Maximum	
	Penetration (inches)	Slump (inches)	Penetration (inches)	Slump (inches)
Concrete Pavement	0 - 1	—	1-1/2	—
Non-reinforced concrete facilities	0 – 1-1/2	—	2	—
Reinforced concrete structures				
Sections over 12 inches thick	0 – 1-1/2	—	2-1/2	—
Sections 12 inches thick or less	0 - 2	—	3	—
Concrete placed under water	—	6 - 8	—	9
Cast-in-place concrete piles	2-1/2 – 3-1/2	5 - 7	4	8

The amount of free water used in concrete shall not exceed 310 pounds per cubic yard, plus 20 pounds for each required 100 pounds of cementitious material in excess of 550 pounds per cubic yard.

The term free water is defined as the total water in the mixture minus the water absorbed by the aggregates in reaching a saturated surface-dry condition.

If there are adverse or difficult conditions that affect the placing of concrete, the above specified penetration and free water content limitations may be exceeded providing the Contractor is granted permission by the Engineer in writing to increase the cementitious material content per cubic yard of concrete. The increase in water and cementitious material shall be at a ratio not to exceed 30 pounds of water per added 100 pounds of cementitious material per cubic yard. Full compensation for additional cementitious material and water added under these conditions shall be considered as included in the contract price paid for the concrete work involved and no additional compensation will be allowed therefor.

The equipment for supplying water to the mixer shall be constructed and arranged so that the amount of water added can be measured accurately. Any method of discharging water into the mixer for a batch shall be accurate within 1.5 percent of the quantity of water required to be added to the mix for any position of the mixer. Tanks used to measure water shall be designed so that water cannot enter while water is being discharged into the mixer and discharge into the mixer shall be made rapidly in one operation without dribbling. All equipment shall be arranged so as to permit checking the amount of water delivered by discharging into measured containers.

90-7 CURING CONCRETE

90-7.01 METHODS OF CURING

Newly placed concrete shall be cured by the methods specified in this Section 90-7.01 and the special provisions.

90-7.01A Water Method

The concrete shall be kept continuously wet by the application of water for a minimum curing period of 7 days after the concrete has been placed.

Cotton mats, rugs, carpets, or earth or sand blankets may be used as a curing medium to retain the moisture during the curing period.

If a curing medium consisting of cotton mats, rugs, carpets, polyethylene sheeting, polyethylene sheeting on burlap, or earth or sand blankets is to be used to retain the moisture, the entire surface of the concrete shall be kept damp by applying water with a nozzle that so atomizes the flow that a mist and not a spray is formed, until the surface of the concrete is covered with the curing medium. The moisture from the nozzle shall not be applied under pressure directly upon the concrete and shall not be allowed to accumulate on the concrete in a quantity sufficient to cause a flow or wash the surface. At the expiration of the curing period, the concrete surfaces shall be cleared of all curing media.

At the option of the Contractor, a curing medium consisting of white opaque polyethylene sheeting extruded onto burlap may be used to cure concrete structures. The polyethylene sheeting shall have a minimum thickness of 4-mil, and shall be extruded onto 10-ounce burlap.

At the option of the Contractor, a curing medium consisting of polyethylene sheeting may be used to cure concrete columns. The polyethylene sheeting shall have a minimum thickness of 10-mil achieved in a single layer of material.

If the Contractor chooses to use polyethylene sheeting or polyethylene sheeting on burlap as a curing medium, these media and any joints therein shall be secured as necessary to provide moisture retention and shall be within 3 inches of the concrete at all points along the surface being cured. When these media are used, the temperature of the

concrete shall be monitored during curing. If the temperature of the concrete cannot be maintained below 140° F, use of these curing media shall be disallowed.

When concrete bridge decks and flat slabs are to be cured without the use of a curing medium, the entire surface of the bridge deck or slab shall be kept damp by the application of water with an atomizing nozzle as specified above, until the concrete has set, after which the entire surface of the concrete shall be sprinkled continuously with water for a period of not less than 7 days.

90-7.01B Curing Compound Method

Surfaces of the concrete that are exposed to the air shall be sprayed uniformly with a curing compound.

Curing compounds to be used shall be as follows:

1. Pigmented curing compound conforming to the requirements in ASTM Designation: C 309, Type 2, Class B, except the resin type shall be poly-alpha-methylstyrene.
2. Pigmented curing compound conforming to the requirements in ASTM Designation: C 309, Type 2, Class B.
3. Pigmented curing compound conforming to the requirements in ASTM Designation: C 309, Type 2, Class A.
4. Nonpigmented curing compound conforming to the requirements in ASTM Designation: C 309, Type 1, Class B.
5. Nonpigmented curing compound conforming to the requirements in ASTM Designation: C 309, Type 1, Class A.
6. Nonpigmented curing compound with fugitive dye conforming to the requirements in ASTM Designation: C 309, Type 1-D, Class A.

The infrared scan for the dried vehicle from curing compound (1) shall match the infrared scan on file at the Transportation Laboratory.

The loss of water for each type of curing compound, when tested in conformance with the requirements in California Test 534, shall not be more than 0.28 pounds per square yard in 24 hours.

The curing compound to be used will be specified elsewhere in these specifications or in the special provisions.

If the use of curing compound is required or permitted elsewhere in these specifications or in the special provisions and no specific kind is specified, any of the curing compounds listed above may be used.

Curing compound shall be applied at a nominal rate of one gallon per 150 square feet, unless otherwise specified.

At any point, the application rate shall be within ±50 square feet per gallon of the nominal rate specified, and the average application rate shall be within ±25 square feet per gallon of the nominal rate specified when tested in conformance with the requirements in California Test 535. Runs, sags, thin areas, skips, or holidays in the applied curing compound shall be evidence that the application is not satisfactory.

Curing compounds shall be applied using power operated spray equipment. The power operated spraying equipment shall be equipped with an operational pressure gage and a means of controlling the pressure. Hand spraying of small and irregular areas that are not reasonably accessible to mechanical spraying equipment, in the opinion of the Engineer, may be permitted.

The curing compound shall be applied to the concrete following the surface finishing operation, immediately before the moisture sheen disappears from the surface, but before any drying shrinkage or craze cracks begin to appear. In the event of any drying or cracking of the surface, application of water with an atomizing nozzle as specified in Section 90-7.01A, "Water Method," shall be started immediately and shall be continued until application of the compound is resumed or started; however, the compound shall not be applied over any resulting freestanding water. Should the film of compound be damaged from any cause before the expiration of 7 days after the concrete is placed in the case of structures and 72 hours in the case of pavement, the damaged portion shall be repaired immediately with additional compound.

At the time of use, compounds containing pigments shall be in a thoroughly mixed condition with the pigment uniformly dispersed throughout the vehicle. A paddle shall be used to loosen all settled pigment from the bottom of the container, and a power driven agitator shall be used to disperse the pigment uniformly throughout the vehicle.

Agitation shall not introduce air or other foreign substance into the curing compound.

The manufacturer shall include in the curing compound the necessary additives for control of sagging, pigment settling, leveling, de-emulsification, or other requisite qualities of a satisfactory working material. Pigmented curing compounds shall be manufactured so that the pigment does not settle badly, does not cake or thicken in the

container, and does not become granular or curdled. Settlement of pigment shall be a thoroughly wetted, soft, mushy mass permitting the complete and easy vertical penetration of a paddle. Settled pigment shall be easily redispersed, with minimum resistance to the sideways manual motion of the paddle across the bottom of the container, to form a smooth uniform product of the proper consistency.

Curing compounds shall remain sprayable at temperatures above 40 °F and shall not be diluted or altered after manufacture.

The curing compound shall be packaged in clean 274-gallon totes, 55-gallon barrels or 5-gallon pails shall be supplied from a suitable storage tank located at the jobsite. The containers shall comply with "Title 49, Code of Federal Regulations, Hazardous Materials Regulations." The 274-gallon totes and the 55-gallon barrels shall have removable lids and airtight fasteners. The 5-gallon pails shall be round and have standard full open head and bail. Lids with bungholes will not be permitted. Settling or separation of solids in containers, except tanks, must be completely redispersed with low speed mixing prior to use, in conformance with these specifications and the manufacturer's recommendations. Mixing shall be accomplished either manually by use of a paddle or by use of a mixing blade driven by a drill motor, at low speed. Mixing blades shall be the type used for mixing paint. On-site storage tanks shall be kept clean and free of contaminants. Each tank shall have a permanent system designed to completely redisperse settled material without introducing air or other foreign substances.

Steel containers and lids shall be lined with a coating that will prevent destructive action by the compound or chemical agents in the air space above the compound. The coating shall not come off the container or lid as skins. Containers shall be filled in a manner that will prevent skinning. Plastic containers shall not react with the compound.

Each container shall be labeled with the manufacturer's name, kind of curing compound, batch number, volume, date of manufacture, and volatile organic compound (VOC) content. The label shall also warn that the curing compound containing pigment shall be well stirred before use. Precautions concerning the handling and the application of curing compound shall be shown on the label of the curing compound containers in conformance with the Construction Safety Orders and General Industry Safety Orders of the State.

Containers of curing compound shall be labeled to indicate that the contents fully comply with the rules and regulations concerning air pollution control in the State.

When the curing compound is shipped in tanks or tank trucks, a shipping invoice shall accompany each load. The invoice shall contain the same information as that required herein for container labels.

Curing compound will be sampled by the Engineer at the source of supply, at the job site, or at both locations.

Curing compound shall be formulated so as to maintain the specified properties for a minimum of one year. The Engineer may require additional testing before use to determine compliance with these specifications if the compound has not been used within one year or whenever the Engineer has reason to believe the compound is no longer satisfactory.

Tests will be conducted in conformance with the latest ASTM test methods and methods in use by the Transportation Laboratory.

90-7.01C Waterproof Membrane Method

The exposed finished surfaces of concrete shall be sprayed with water, using a nozzle that so atomizes the flow that a mist and not a spray is formed, until the concrete has set, after which the curing membrane, shall be placed. The curing membrane shall remain in place for a period of not less than 72 hours.

Sheeting material for curing concrete shall conform to the requirements in AASHTO Designation: M 171 for white reflective materials.

The sheeting material shall be fabricated into sheets of such width as to provide a complete cover for the entire concrete surface. Joints in the sheets shall be securely cemented together in such a manner as to provide a waterproof joint. The joint seams shall have a minimum lap of 0.33 foot.

The sheets shall be securely weighted down by placing a bank of earth on the edges of the sheets or by other means satisfactory to the Engineer.

Should any portion of the sheets be broken or damaged before the expiration of 72 hours after being placed, the broken or damaged portions shall be immediately repaired with new sheets properly cemented into place.

Sections of membrane that have lost their waterproof qualities or have been damaged to such an extent as to render them unfit for curing the concrete shall not be used.

90-7.01D Forms-In-Place Method

Formed surfaces of concrete may be cured by retaining the forms in place. The forms shall remain in place for a minimum period of 7 days after the concrete has been placed, except that for members over 20 inches in least dimension the forms shall remain in place for a minimum period of 5 days.

Joints in the forms and the joints between the end of forms and concrete shall be kept moisture tight during the curing period. Cracks in the forms and cracks between the forms and the concrete shall be resealed by methods subject to the approval of the Engineer.

90-7.02 BLANK

90-7.03 CURING STRUCTURES

Newly placed concrete for cast-in-place structures, other than highway bridge decks, shall be cured by the water method, the forms-in-place method, or, as permitted herein, by the curing compound method, in conformance with the provisions in Section 90-7.01, "Methods of Curing."

The curing compound method using a pigmented curing compound may be used on concrete surfaces of construction joints, surfaces that are to be buried underground, and surfaces where only ordinary surface finish is to be applied and on which a uniform color is not required and that will not be visible from a public traveled way. If the Contractor elects to use the curing compound method on the bottom slab of box girder spans, the curing compound shall be curing compound (1).

The top surface of highway bridge decks shall be cured by both the curing compound method and the water method. The curing compound shall be curing compound (1).

Concrete surfaces of minor structures, as defined in Section 51-1.02, "Minor Structures," shall be cured by the water method, the forms-in-place method or the curing compound method.

When deemed necessary by the Engineer during periods of hot weather, water shall be applied to concrete surfaces being cured by the curing compound method or by the forms-in-place method, until the Engineer determines that a cooling effect is no longer required. Application of water for this purpose will be paid for as extra work as provided in Section 4-1.03D, "Extra Work."

90-7.04 CURING PRECAST CONCRETE MEMBERS

Precast concrete members shall be cured in conformance with any of the methods specified in Section 90-7.01, "Methods of Curing." Curing shall be provided for the minimum time specified for each method or until the concrete reaches its design strength, whichever is less. Steam curing may also be used for precast members and shall conform to the following provisions:

A. After placement of the concrete, members shall be held for a minimum 4-hour presteaming period. If the ambient air temperature is below 50 °F, steam shall be applied during the presteaming period to hold the air surrounding the member at a temperature between 50 °F and 90 °F.
B. To prevent moisture loss on exposed surfaces during the presteaming period, members shall be covered as soon as possible after casting or the exposed surfaces shall be kept wet by fog spray or wet blankets.
C. Enclosures for steam curing shall allow free circulation of steam about the member and shall be constructed to contain the live steam with a minimum moisture loss. The use of tarpaulins or similar flexible covers will be permitted, provided they are kept in good repair and secured in such a manner as to prevent the loss of steam and moisture.
D. Steam at the jets shall be at low pressure and in a saturated condition. Steam jets shall not impinge directly on the concrete, test cylinders, or forms. During application of the steam, the temperature rise within the enclosure shall not exceed 40 °F per hour. The curing temperature throughout the enclosure shall not exceed 150 °F and shall be maintained at a constant level for a sufficient time necessary to develop the required transfer strength. Control cylinders shall be covered to prevent moisture loss and shall be placed in a location where temperature is representative of the average temperature of the enclosure.
E. Temperature recording devices that will provide an accurate, continuous, permanent record of the curing temperature shall be provided. A minimum of one temperature recording device per 200 feet of continuous bed length will be required for checking temperature.
F. Members in pretension beds shall be detensioned immediately after the termination of steam curing while the concrete and forms are still warm, or the temperature under the enclosure shall be maintained above 60 °F until the stress is transferred to the concrete.
G. Curing of precast concrete will be considered completed after termination of the steam curing cycle.

90-7.05 CURING PRECAST PRESTRESSED CONCRETE PILES

Newly placed concrete for precast prestressed concrete piles shall be cured in conformance with the provisions in Section 90-7.04, "Curing Precast Concrete Members," except that piles in a corrosive environment shall be cured as follows:

A. Piles shall be either steam cured or water cured. If water curing is used, the piles shall be kept continuously wet by the application of water in conformance with the provisions in Section 90-7.01A, "Water Method."
B. If steam curing is used, the steam curing provisions in Section 90-7.04, "Curing Precast Concrete Members," shall apply except that the piles shall be kept continuously wet for their entire length for a period of not less than 3 days, including the holding and steam curing periods.

90-7.06 CURING SLOPE PROTECTION

Concrete slope protection shall be cured in conformance with any of the methods specified in Section 90-7.01, "Methods of Curing."

Concreted-rock slope protection shall be cured in conformance with any of the methods specified in Section 90-7.01, "Methods of Curing," with a blanket of earth kept wet for 72 hours, or by sprinkling with a fine spray of water every 2 hours during the daytime for a period of 3 days.

90-7.07 CURING MISCELLANEOUS CONCRETE WORK

Exposed surfaces of curbs shall be cured by pigmented curing compounds as specified in Section 90-7.01B, "Curing Compound Method."

Concrete sidewalks, gutter depressions, island paving, curb ramps, driveways, and other miscellaneous concrete areas shall be cured in conformance with any of the methods specified in Section 90-7.01, "Methods of Curing."

Shotcrete shall be cured for at least 72 hours by spraying with water, by a moist earth blanket, or by any of the methods provided in Section 90-7.01, "Methods of Curing."

Mortar and grout shall be cured by keeping the surface damp for 3 days.

After placing, the exposed surfaces of sign structure foundations, including pedestal portions, if constructed, shall be cured for at least 72 hours by spraying with water, by a moist earth blanket, or by any of the methods provided in Section 90-7.01, "Methods of Curing."

90-8 PROTECTING CONCRETE

90-8.01 GENERAL

In addition to the provisions in Section 7-1.16, "Contractor's Responsibility for the Work and Materials," the Contractor shall protect concrete as provided in this Section 90-8. If required by the Engineer, the Contractor shall submit a written outline of the proposed methods for protecting the concrete.

The Contractor shall protect concrete from damage from any cause, which shall include, but not be limited to: rain, heat, cold, wind, Contractor's actions, and actions of others.

Concrete shall not be placed on frozen or ice-coated ground or subgrade nor on ice-coated forms, reinforcing steel, structural steel, conduits, precast members, or construction joints.

Under rainy conditions, placing of concrete shall be stopped before the quantity of surface water is sufficient to damage surface mortar or cause a flow or wash of the concrete surface, unless the Contractor provides adequate protection against damage.

Concrete that has been frozen or damaged by other causes, as determined by the Engineer, shall be removed and replaced by the Contractor at the Contractor's expense.

90-8.02 PROTECTING CONCRETE STRUCTURES

Structure concrete and shotcrete used as structure concrete shall be maintained at a temperature of not less than 45 °F for 72 hours after placing and at not less than 40 °F for an additional 4 days.

90-9 COMPRESSIVE STRENGTH

90-9.01 GENERAL

Concrete compressive strength requirements consist of a minimum strength that shall be attained before various loads or stresses are applied to the concrete and, for concrete designated by compressive strength, a minimum strength at the age of 28 days or at the age otherwise allowed in Section 90-1.01, "Description." The various strengths required are specified in these specifications or the special provisions or are shown on the plans.

The compressive strength of concrete will be determined from test cylinders that have been fabricated from concrete sampled in conformance with the requirements of California Test 539. Test cylinders will be molded and initially field cured in conformance with California Test 540. Test cylinders will be cured and tested after receipt at the testing laboratory in conformance with the requirements of California Test 521. A strength test shall consist of the average strength of 2 cylinders fabricated from material taken from a single load of concrete, except that, if any

cylinder should show evidence of improper sampling, molding, or testing, that cylinder shall be discarded and the strength test shall consist of the strength of the remaining cylinder.

When concrete compressive strength is specified as a prerequisite to applying loads or stresses to a concrete structure or member, test cylinders for other than steam cured concrete will be cured in conformance with Method 1 of California Test 540. The compressive strength of concrete determined for these purposes will be evaluated on the basis of individual tests.

When concrete is designated by compressive strength rather than by cementitious material content, the concrete strength to be used as a basis for acceptance of other than steam cured concrete will be determined from cylinders cured in conformance with Method 1 of California Test 540. If the result of a single compressive strength test at the maximum age specified or allowed is below the specified strength but is 95 percent or more of the specified strength, the Contractor shall make corrective changes, subject to approval of the Engineer, in the mix proportions or in the concrete fabrication procedures, before placing additional concrete, and shall pay to the State $10 for each in-place cubic yard of concrete represented by the deficient test. If the result of a single compressive strength test at the maximum age specified or allowed is below 95 percent of the specified strength, but is 85 percent or more of the specified strength, the Contractor shall make the corrective changes specified above, and shall pay to the State $15 for each in-place cubic yard of concrete represented by the deficient test. In addition, such corrective changes shall be made when the compressive strength of concrete tested at 7 days indicates, in the judgment of the Engineer, that the concrete will not attain the required compressive strength at the maximum age specified or allowed. Concrete represented by a single test that indicates a compressive strength of less than 85 percent of the specified 28-day compressive strength will be rejected in conformance with the provisions in Section 6-1.04, "Defective Materials."

If the test result indicates that the compressive strength at the maximum age specified or allowed is below the specified strength, but is 85 percent or more of the specified strength, payments to the State as required above shall be made, unless the Contractor, at the Contractor's expense, obtains and submits evidence acceptable to the Engineer that the strength of the concrete placed in the work meets or exceeds the specified 28-day compressive strength. If the test result indicates a compressive strength at the maximum age specified or allowed below 85 percent, the concrete represented by that test will be rejected, unless the Contractor, at the Contractor's expense, obtains and submits evidence acceptable to the Engineer that the strength of the concrete placed in the work is at least 85 percent of the specified strength. If the evidence consists of tests made on cores taken from the work, the cores shall be obtained and tested in conformance with the requirements in ASTM Designation: C 42.

No single compressive strength test shall represent more than 320 cubic yards.

If a precast concrete member is steam cured, the compressive strength of the concrete will be determined from test cylinders that have been handled and stored in conformance with Method 3 of California Test 540. The compressive strength of steam cured concrete will be evaluated on the basis of individual tests representing specific portions of production. If the concrete is designated by 28-day compressive strength rather than by cementitious material content, the concrete shall be considered to be acceptable whenever its compressive strength reaches the specified 28-day compressive strength provided that strength is reached in not more than the maximum number of days specified or allowed after the member is cast.

When concrete has a specified 28-day compressive strength greater than 3,600 pounds per square inch or when prequalification is specified, prequalification of materials, mix proportions, mixing equipment, and procedures proposed for use will be required prior to placement of the concrete. Prequalification shall be accomplished by the submission of acceptable certified test data or trial batch reports by the Contractor. Prequalification data shall be based on the use of materials, mix proportions, mixing equipment, procedures, and size of batch proposed for use in the work.

Certified test data, in order to be acceptable, shall indicate that not less than 90 percent of at least 20 consecutive tests exceed the specified strength at the maximum number of days specified or allowed, and none of those tests are less than 95 percent of specified strength. Strength tests included in the data shall be the most recent tests made on concrete of the proposed mix design and all shall have been made within one year of the proposed use of the concrete.

Trial batch test reports, in order to be acceptable, shall indicate that the average compressive strength of 5 consecutive concrete cylinders, taken from a single batch, at not more than 28 days (or the maximum age allowed) after molding shall be at least 600 pounds per square inch greater than the specified 28-day compressive strength, and no individual cylinder shall have a strength less than the specified strength at the maximum age specified or allowed. Data contained in the report shall be from trial batches that were produced within one year of the proposed use of specified strength concrete in the project. Whenever air-entrainment is required, the air content of trial batches shall be equal to or greater than the air content specified for the concrete without reduction due to tolerances.

Tests shall be performed in conformance with either the appropriate California Test methods or the comparable ASTM test methods. Equipment employed in testing shall be in good condition and shall be properly calibrated. If

the tests are performed during the life of the contract, the Engineer shall be notified sufficiently in advance of performing the tests in order to witness the test procedures.

The certified test data and trial batch test reports shall include the following information:

A. Date of mixing.
B. Mixing equipment and procedures used.
C. The size of batch in cubic yards and the weight, type, and source of all ingredients used.
D. Penetration or slump (if the concrete will be placed under water or placed in cast-in-place concrete piles) of the concrete.
E. The air content of the concrete if an air-entraining admixture is used.
F. The age at time of testing and strength of all concrete cylinders tested.

Certified test data and trial batch test reports shall be signed by an official of the firm that performed the tests.

When approved by the Engineer, concrete from trial batches may be used in the work at locations where concrete of a lower quality is required and the concrete will be paid for as the type of concrete required at that location.

After materials, mix proportions, mixing equipment, and procedures for concrete have been prequalified for use, additional prequalification by testing of trial batches will be required prior to making changes that, in the judgment of the Engineer, could result in a strength of concrete below that specified.

The Contractor's attention is directed to the time required to test trial batches and the Contractor shall be responsible for production of trial batches at a sufficiently early date so that the progress of the work is not delayed.

When precast concrete members are manufactured at the plant of an established manufacturer of precast concrete members, the mix proportions of the concrete shall be determined by the Contractor, and a trial batch and prequalification of the materials, mix proportions, mixing equipment, and procedures will not be required.

90-10 MINOR CONCRETE

90-10.01 GENERAL

Concrete for minor structures, slope paving, curbs, sidewalks and other concrete work, when designated as minor concrete on the plans, in the specifications, or in the contract item, shall conform to the provisions specified herein.

The Engineer, at the Engineer's discretion, will inspect and test the facilities, materials and methods for producing the concrete to ensure that minor concrete of the quality suitable for use in the work is obtained.

Before using minor concrete or in advance of revising the mix proportions, the Contractor shall submit in writing to the Engineer a copy of the mix design. When required by the following table, the Contractor shall include compressive strength test results verifying the minimum specified compressive strength:

SCM	Test Submittal Required
Fly Ash used alone	When portland cement content<350 lbs/cy
GGBFS used alone	When portland cement content <250 lbs/cy
Natural Pozzolan used alone	When portland cement content <350 lbs/cy
More than 1 SCM	Always

Tests shall be performed by an ACI certified technician.

90-10.02 MATERIALS

Minor concrete shall conform to the following requirements:

90-10.02A Cementitious Material

Cementitious material shall conform to the provisions in Section 90-1.01, "Description," and 90-2, "Materials."

90-10.02B Aggregate

Aggregate shall be clean and free from deleterious coatings, clay balls, roots, and other extraneous materials.

Use of crushed concrete or reclaimed aggregate is acceptable only if the aggregate satisfies all aggregate requirements.

The Contractor shall submit to the Engineer for approval, a grading of the combined aggregate proposed for use in the minor concrete. After acceptance of the grading, aggregate furnished for minor concrete shall conform to that grading, unless a change is authorized in writing by the Engineer.

The Engineer may require the Contractor to furnish periodic test reports of the aggregate grading furnished. The maximum size of aggregate used shall be at the option of the Contractor, but in no case shall the maximum size be larger than 1-1/2-inch or smaller than 3/4 inch.

The Engineer may waive, in writing, the gradation requirements in this Section 90-10.02B, if, in the Engineer's opinion, the furnishing of the gradation is not necessary for the type or amount of concrete work to be constructed.

90-10.02C Water

Water used for washing, mixing, and curing shall be free from oil, salts, and other impurities that would discolor or etch the surface or have an adverse affect on the quality of the concrete.

90-10.02D Admixtures

The use of admixtures shall conform to the provisions in Section 90-4, "Admixtures."

90-10.03 PRODUCTION

Cementitious material, water, aggregate, and admixtures shall be stored, proportioned, mixed, transported, and discharged in conformance with recognized standards of good practice that will result in concrete that is thoroughly and uniformly mixed, that is suitable for the use intended, and that conforms to requirements specified herein. Recognized standards of good practice are outlined in various industry publications such as are issued by American Concrete Institute, AASHTO, or the Department.

The cementitious material content of minor concrete shall conform to the provisions in Section 90-1.01, "Description."

The amount of water used shall result in a consistency of concrete conforming to the provisions in Section 90-6.06, "Amount of Water and Penetration." Additional mixing water shall not be incorporated into the concrete during hauling or after arrival at the delivery point, unless allowed by the Engineer.

Discharge of ready-mixed concrete from the transporting vehicle shall be made while the concrete is still plastic and before stiffening occurs. An elapsed time of 1.5 hours (one hour in non-agitating hauling equipment), or more than 250 revolutions of the drum or blades, after the introduction of the cementitious material to the aggregates, or a temperature of concrete of more than 90 °F will be considered conditions contributing to the quick stiffening of concrete. The Contractor shall take whatever action is necessary to eliminate quick stiffening, except that the addition of water will not be permitted.

The required mixing time in stationary mixers shall be not less than 50 seconds or more than 5 minutes.

The minimum required revolutions at mixing speed for transit-mixed concrete shall be not less than that recommended by the mixer manufacturer, and shall be increased, if necessary, to produce thoroughly and uniformly mixed concrete.

When a high range water-reducing admixture is added to the concrete at the job site, the total number of revolutions shall not exceed 300.

Each load of ready-mixed concrete shall be accompanied by a weighmaster certificate that shall be delivered to the Engineer at the discharge location of the concrete, unless otherwise directed by the Engineer. The weighmaster certificate shall be clearly marked with the date and time of day when the load left the batching plant and, if hauled in truck mixers or agitators, the time the mixing cycle started.

A Certificate of Compliance conforming to the provisions in Section 6-1.07, "Certificates of Compliance," shall be furnished to the Engineer, prior to placing minor concrete from a source not previously used on the contract, stating that minor concrete to be furnished meets contract requirements, including minimum cementitious material content specified.

90-10.04 CURING MINOR CONCRETE

Curing minor concrete shall conform to the provisions in Section 90-7, "Curing Concrete."

90-10.05 PROTECTING MINOR CONCRETE

Protecting minor concrete shall conform to the provisions in Section 90-8, "Protecting Concrete," except the concrete shall be maintained at a temperature of not less than 40 °F for 72 hours after placing.

90-10.06 MEASUREMENT AND PAYMENT

Minor concrete will be measured and paid for in conformance with the provisions specified in the various sections of these specifications covering concrete construction when minor concrete is specified in the specifications, shown on the plans, or indicated by contract item in the Engineer's Estimate.

90-11 MEASUREMENT AND PAYMENT

90-11.01 MEASUREMENT

Portland cement concrete will be measured in conformance with the provisions specified in the various sections of these specifications covering construction requiring concrete.

For concrete measured at the mixer, the volume in cubic feet shall be computed as the total weight of the batch in pounds divided by the density of the concrete in pounds per cubic foot. The total weight of the batch shall be calculated as the sum of all materials, including water, entering the batch. The density of the concrete will be determined in conformance with the requirements in California Test 518.

90-11.02 PAYMENT

Portland cement concrete will be paid for in conformance with the provisions specified in the various sections of these specifications covering construction requiring concrete.

Full compensation for furnishing and incorporating admixtures required by these specifications or the special provisions will be considered as included in the contract prices paid for the concrete involved and no additional compensation will be allowed therefor.

Should the Engineer order the Contractor to incorporate any admixtures in the concrete when their use is not required by these specifications or the special provisions, furnishing the admixtures and adding them to the concrete will be paid for as extra work as provided in Section 4-1.03D, "Extra Work."

Should the Contractor use admixtures in conformance with the provisions in Section 90-4.05, "Optional Use of Chemical Admixtures," or Section 90-4.07, "Optional Use of Air-entraining Admixtures," or should the Contractor request and obtain permission to use other admixtures for the Contractor's benefit, the Contractor shall furnish those admixtures and incorporate them into the concrete at the Contractor's expense and no additional compensation will be allowed therefor.

^^

SECTION 92 ASPHALTS
(Issued 01-20-12)

Replace Section 92 with:

SECTION 92 ASPHALTS

92-1.01 DESCRIPTION

Asphalt is refined petroleum or a mixture of refined liquid asphalt and refined solid asphalt that are prepared from crude petroleum. Asphalt is:

1. Free from residues caused by the artificial distillation of coal, coal tar, or paraffin
2. Free from water
3. Homogeneous

92-1.02 MATERIALS

GENERAL

Furnish asphalt under the Department's "Certification Program for Suppliers of Asphalt." The Department maintains the program requirements, procedures, and a list of approved suppliers at:

http://www.dot.ca.gov/hq/esc/Translab/fpm/fpmcoc.htm

Transport, store, use, and dispose of asphalt safely.

Prevent the formation of carbonized particles caused by overheating asphalt during manufacturing or construction.

GRADES

Performance graded (PG) asphalt binder is:

Performance Graded Asphalt Binder

Property	AASHTO Test Method	Specification Grade				
		PG 58-22 [a]	PG 64-10	PG 64-16	PG 64-28	PG 70-10
Original Binder						
Flash Point, Minimum °C	T 48	230	230	230	230	230
Solubility, Minimum % [b]	T 44	99	99	99	99	99
Viscosity at 135°C, [c]	T 316					
Maximum, Pa·s		3.0	3.0	3.0	3.0	3.0
Dynamic Shear,	T 315					
Test Temp. at 10 rad/s, °C		58	64	64	64	70
Minimum G*/sin(delta), kPa		1.00	1.00	1.00	1.00	1.00
Maximum G*/sin(delta), kPa		2.00	2.00	2.00	2.00	2.00
RTFO Test, [e]	T 240					
Mass Loss, Maximum, %		1.00	1.00	1.00	1.00	1.00
RTFO Test Aged Binder						
Dynamic Shear,	T 315					
Test Temp. at 10 rad/s, °C		58	64	64	64	70
Minimum G*/sin(delta), kPa		2.20	2.20	2.20	2.20	2.20
Ductility at 25°C	T 51					
Minimum, cm		75	75	75	75	75
PAV [f] Aging,	R 28					
Temperature, °C		100	100	100	100	110
RTFO Test and PAV Aged Binder						
Dynamic Shear,	T 315					
Test Temp. at 10 rad/s, °C		22 [d]	31 [d]	28 [d]	22 [d]	34 [d]
Maximum G*sin(delta), kPa		5000	5000	5000	5000	5000
Creep Stiffness,	T 313					
Test Temperature, °C		-12	0	-6	-18	0
Maximum S-value, Mpa		300	300	300	300	300
Minimum M-value		0.300	0.300	0.300	0.300	0.300

Notes:

a. Use as asphalt rubber base stock for high mountain and high desert area.

b. The Engineer waives this specification if the supplier is a Quality Supplier as defined by the Department's "Certification Program for Suppliers of Asphalt."

c. The Engineer waives this specification if the supplier certifies the asphalt binder can be adequately pumped and mixed at temperatures meeting applicable safety standards.

d. Test the sample at 3°C higher if it fails at the specified test temperature. G*sin(delta) remains 5000 kPa maximum.

e. "RTFO Test" means the asphaltic residue obtained using the Rolling Thin Film Oven Test, AASHTO Test Method T 240 or ASTM Designation: D 2872. The residue from mass change determination may be used for other tests.

f. "PAV" means Pressurized Aging Vessel.

Performance graded polymer modified asphalt binder (PG Polymer Modified) is:

Performance Graded Polymer Modified Asphalt Binder [a]

Property	AASHTO Test Method	Specification Grade		
		PG 58-34 PM	PG 64-28 PM	PG 76-22 PM
Original Binder				
Flash Point, Minimum °C	T 48	230	230	230
Solubility, Minimum % [b]	T 44[c]	98.5	98.5	98.5
Viscosity at 135°C, [d] Maximum, Pa·s	T 316	3.0	3.0	3.0
Dynamic Shear, Test Temp. at 10 rad/s, °C Minimum G*/sin(delta), kPa	T 315	58 1.00	64 1.00	76 1.00
RTFO Test , Mass Loss, Maximum, %	T 240	1.00	1.00	1.00
RTFO Test Aged Binder				
Dynamic Shear, Test Temp. at 10 rad/s, °C Minimum G*/sin(delta), kPa	T 315	58 2.20	64 2.20	76 2.20
Dynamic Shear, Test Temp. at 10 rad/s, °C Maximum (delta), %	T 315	Note e 80	Note e 80	Note e 80
Elastic Recovery[f], Test Temp., °C Minimum recovery, %	T 301	25 75	25 75	25 65
PAV[g] Aging, Temperature, °C	R 28	100	100	110
RTFO Test and PAV Aged Binder				
Dynamic Shear, Test Temp. at 10 rad/s, °C Maximum G*sin(delta), kPa	T 315	16 5000	22 5000	31 5000
Creep Stiffness, Test Temperature, °C Maximum S-value, MPa Minimum M-value	T 313	-24 300 0.300	-18 300 0.300	-12 300 0.300

Notes:

a. Do not modify PG Polymer Modified using acid modification.

b. The Engineer waives this specification if the supplier is a Quality Supplier as defined by the Department's "Certification Program for Suppliers of Asphalt."

c. The Department allows ASTM D 5546 instead of AASHTO T 44

d. The Engineer waives this specification if the supplier certifies the asphalt binder can be adequately pumped and mixed at temperatures meeting applicable safety standards.

e. Test temperature is the temperature at which G*/sin(delta) is 2.2 kPa. A graph of log G*/sin(delta) plotted against temperature may be used to determine the test temperature when G*/sin(delta) is 2.2 kPa. A graph of (delta) versus temperature may be used to determine delta at the temperature when G*/sin(delta) is 2.2 kPa. The Engineer also accepts direct measurement of (delta) at the temperature when G*/sin(delta) is 2.2 kPa.

f. Tests without a force ductility clamp may be performed.

g. "PAV" means Pressurized Aging Vessel.

SAMPLING

Provide a sampling device in the asphalt feed line connecting the plant storage tanks to the asphalt weighing system or spray bar. Make the sampling device accessible between 24 and 30 inches above the platform. Provide a receptacle for flushing the sampling device.

Include with the sampling device a valve:

1. Between 1/2 and 3/4 inch in diameter
2. Manufactured in a manner that a one-quart sample may be taken slowly at any time during plant operations
3. Maintained in good condition

Replace failed valves.

In the Engineer's presence, take 2 one-quart samples per operating day. Provide round, friction top, one-quart containers for storing samples.

92-1.03 EXECUTION

If asphalt is applied, you must comply with the heating and application specifications for liquid asphalt in Section 93, "Liquid Asphalts."

92-1.04 MEASUREMENT

If the contract work item for asphalt is paid by weight, the Department measures asphalt tons by complying with the specifications for weight determination of liquid asphalt in Section 93, "Liquid Asphalts."

The Engineer determines the asphalt weight from volumetric measurements if you:

1. Use a partial asphalt load
2. Use asphalt at a location other than a mixing plant and no scales within 20 miles are available and suitable
3. Deliver asphalt in either of the following:

    3.1. A calibrated truck with each tank accompanied by its measuring stick and calibration card
    3.2. A truck equipped with a calibrated thermometer that determines the asphalt temperature at the delivery time and with a vehicle tank meter complying with the specifications for weighing, measuring, and metering devices in Section 9-1.01, "Measurement of Quantities"

If you furnish hot mix asphalt from a mixing plant producing material for only one project, the Engineer determines the asphalt quantity by measuring the volume in the tank at the project's start and end provided the tank is calibrated and equipped with its measuring stick and calibration card.

The Engineer determines pay quantities from volumetric measurements as follows:

1. Before converting the volume to weight, the Engineer reduces the measured volume to that which the asphalt would occupy at 60 °F.
2. The Engineer uses 235 gallons per ton and 8.51 pounds per gallon for the average weight and volume for PG and PG Polymer Modified asphalt grades at 60 °F.
3. The Engineer uses the Conversion Table in Section 93, "Liquid Asphalts."

^^

SECTION 93 LIQUID ASPHALTS

(Issued 11-03-06)

In Section 93-1.04 replace the 9th paragraph with:

The following Legend and Conversion Table is to be used for converting volumes of liquid asphalt products, Grades 70 to 3000, inclusive, and paving asphalt Grades PG 58-22, PG 64-10, PG 64-16, PG 64-28, and PG 70-10, and Grades PG 58-34 PM, PG 64-28 PM, and PG 76-22 PM.

^^

SECTION 95 EPOXY
(Issued 06-05-09)

Replace the table in Section 95-2.11 with:

Characteristics of Adhesive:

Test[a]	California Test	Requirement
Brookfield Viscosity, No. 3 Spindle at 20 rpm, Poise at 77°F	434, Part 4	0.9 max.
Gel time, minutes	434, Part 1	2 to 15
Slant Shear Strength on Dry Concrete, psi, after 4 days of cure in air at 77° F ±2° F	434, Part 5[b]	3,000 min.
Slant Shear Strength on Wet Concrete, psi, after 4 days of cure in air at 77° F ±2° F	434, Part 5[b]	1,700 min.
Tensile Strength, psi	434, Part 7, except test after 4 days of cure at 77° F ±2° F	4,500 min.
Elongation, %	434, Part 7, except test after 4 days of cure at 77° F ±2° F	10 max.

[a] The mixing ratio used will be that recommended by the manufacturer.
[b] For slant shear strength on concrete, delete Sections B-1 and B-5 of California Test 434, Part 5. For dry concrete, use Step "2" below only. For wet concrete, use both Steps "1" & "2":

1. Soak blocks in water for 24 hours at 77° F ±2° F. Remove and wipe off excess water.
2. Mix epoxy as described in California Test 434, Part 1, and apply a coat approximately 0.010-inch thick to each diagonal surface. Place four 0.125-inch square pieces of shim stock 0.012-inch thick on one block to control final film thickness. Before pressing the coated surfaces together, leave the blocks so that the coated surfaces are horizontal until the epoxy reacts slightly to prevent excessive flow.

SECTION 5

CONSTRUCTION STAKING GUIDELINES

[PAGE INTENTIONALLY BLANK]

1. *Purpose.*

The purpose of this section is to provide the Contractor, and other interested parties, with the County's staking policies and standards for public works construction projects.

2. *Policies.*

These standards are not intended to be inflexible rules, nor are they intended to cover every situation where stakes are required. The Engineer will discuss the general staking policy with the Contractor at the preconstruction meeting. Generally, all staking should be offset from the work it is intended to control, and staking should remain undisturbed during construction so that continual control of the work can be maintained. The Contractor shall be responsible for keeping stakes exposed throughout their use. Should it become necessary to destroy stakes, the Contractor shall notify the Engineer with sufficient lead time to allow referencing the stakes for later use. The County will establish sufficient survey marks and/or stakes for the Contractor to lay out the necessary work and for the Engineer to check the Contractor's work. Special circumstances that are not covered in this section must be discussed with the Engineer and the Survey Party Chief for approved method of staking. All cuts, fills and offsets will refer to plan lines and grades. Changes from this policy must be approved by the Engineer and Survey Party Chief.

3. *Procedures.*

The information later in this section describes the County's procedures for the various types of Public Works construction surveying.

4. *Staking Policy.*

These standards are intended to be guidelines. They are not designed to cover every situation where stakes are required. Generally, all staking should be offset from the work it is intended to control and in such a manner that the construction work can be completed using these stakes.

The Contractor shall notify the Engineer in writing at least 3 working days before survey services will be required in connection with the laying out of any portion of the Work. The Contractor shall prepare and/or clear the area necessary for line and grade stakes. Unless otherwise specified, stakes will be set and stationed (as applicable) by the Engineer or the Survey Party Chief for curbs, sewers, water system improvements, storm drains, structures, and rough grade. Corresponding cut/ fill to finish grade (or flow line) will be indicated on a grade sheet.

All work shall conform to the lines, elevations, and grades shown on the Plans. Generally three consecutive points set on the same slope shall be used together so that any variation from a straight grade can be detected. Any such variation shall be reported to the Engineer. In the absence of such report, the Contractor shall be responsible for any

error in the grade of the finished work. Grades for underground facilities will be set at the surface of the ground. The Contractor shall transfer them to the bottom of the trench.

5. *Staking Requests.*

All staking requests are to be submitted to the Engineer by the Contractor using a form provided by the Engineer. The Survey Party Chief will set stakes as soon as practicable, and in the order requested, noting the time of completion of each request and the date and time the grade sheets were delivered to the Engineer. The Engineer will provide the Contractor with the grade sheets. Reasonable notice is required so that the survey work can be intelligently planned and coordinated in accordance with the schedules established by the Contractor. The expression "reasonable notice" is not the same for all requests. The Contractor shall notify the Engineer in writing at least 3 days before survey services will be required in connection with the laying out of any portion of the Work. Staking requests should indicate when stakes are required and when the area is ready for staking. Having an area ready for staking generally means the area has been cleared and grubbed of vegetation, equipment has been removed from the area and also cleared from our survey control points, and windrows of earth or other obstructions have been removed. Calendar dates are necessary so that the Survey Party Chief can properly plan and expedite the work. On large projects the requests will be numbered sequentially. General staking requests, e.g. "Stake the Job" are not acceptable. The Engineer is responsible for settling disputes regarding staking priority, and shall have the authority to change the priority of staking when, in his/her opinion the Contractor has requested more staking than necessary or reasonable in a given period of time. The survey crew will provide the necessary line and grade as needed by the Contractor to do basic layout work. Stakes will be set so that the work being referenced can be completed by the Contractor using the ordinary tools of construction. Offsets will usually be in whole feet unless another offset is agreed upon by the Engineer, the Survey Party Chief and the Contractor.

Unless indicated otherwise by the Engineer, Grade Sheets are available to the Contractor 1 day after the field work is completed.

6. *Restaking Charges.*

Construction stakes that are susceptible to being disturbed and/or destroyed by tractors, diggers or vandals, should be requested in a timely manner to reduce exposure to these and other hazards.

The Contractor is responsible for protecting the stakes requested. The Contractor is also responsible for the replacement of stakes when they are lost or disturbed and need to be replaced. The Contractor will be charged for restakes. Restaking charges will be based on the current costs for survey personnel plus overhead.

7. *Stakes and Marks.*

Stakes and marks will be set as follows:

NOTE: As stated above all staking will be to plan lines and grades. Stakes will be set at grade changes, B.C.'s and E.C.'s., angle points and vertical curve B.V.C.'s, E.V.C.'s (as applicable) and the standard staking intervals shall be as shown in the table at the end of this section.

1. *ROAD PROJECTS.*

    1. *Clearing and Grubbing Stakes/Limits of Grading.*

        a. Stakes are generally set at sufficient intervals to provide line of sight between points, but not greater than 100 ft.
        b. Stakes are set for horizontal control only.
        c. On open ground without encroachment problems, a staking tolerance of 1 ft. will be employed.
        d. In urban areas where possible encroachments exist, staking tolerance will be +/- 0.1'

    2. *Rough Grade Stakes*

        a. Rough grade stakes will be set after clearing and grubbing activities are completed by the Contractor.
        b. Two lines of rough grade will usually be set, one on each side of the road with the location to be determined in the field after discussion between the Engineer, survey party chief and the Contractor.
        c. See tables at the end of this section for staking intervals and tolerances
        d. It should not be considered standard practice to use rough grade stakes for other construction purposes where a closer staking tolerance is necessary.

    3. *Slope Stakes*

        a. Slope "catch points" or the daylight point, (a slope stake used to be set at this position in the past) are determined but not set, reference stakes typically at 10' offsets with cut or fill to the slope stake position (catch point).
        b. See tables at the end of this section for staking intervals and tolerances.

    4. *Pavement Stakes*

        Note: Paving stake cuts and fills are always referenced to or set to the plan finished grade unless otherwise agreed upon by the Engineer, survey party chief, and Contractor.

        a. For roadways 44 feet wide or less, only plan elevations shall be staked. If the crown section varies between the plan centerline grade changes, then additional stakes will be referenced to, or set to, plan grade on the center line of roadway at intervals noted on page 8 of this document.

b. Roadways more than 44 feet wide, shall have paving stakes set on all plan elevations. In addition the roadway crown shall be defined by lines of stakes set at prescribed intervals between plan grade changes.
c. In intersections stakes are usually set-to-grade per plan elevations.
d. See tables at the end of this section for staking intervals and tolerances.

5. *Curb Stakes*

a. Cuts and/or Fills will typically be given to top of curb at street face. If it is a variable curb face cuts and fills will be given to both top of curb and flowline.
b. Stakes will be set after clearing and grubbing activities are completed by the Contractor.
c. See tables at the end of this section for staking intervals and tolerances
d. The offset will be determined by discussion with the Survey Party Chief and Contractor.

6. *Sidewalks*

Generally sidewalks are not staked.

7. *Monument Stakes.*

Construction projects may destroy survey monuments. These monuments may or may not be in standard county well monument boxes. The Contract Documents intend to show monuments that may be impacted by project construction, with notes indicating how they are to be preserved, protected, and/or replaced. The Contractor is responsible for protecting these monuments. Should the Contractor identify a survey monument which does not appear on the Plans and is at risk of being destroyed, the Contractor shall alert the Engineer immediately. The Engineer shall take the necessary steps to have the monument located by the Survey Crew, and the Contractor shall ensure that such monuments have been located by the Survey Crew, prior to commencing with construction that would disturb such monuments. Should a monument be destroyed it will need to be replaced typically in a County standard monument well box.

8. *WALL STAKES AND RETAINING WALL STAKES*

1. Stakes will be referenced to the plan lines and grades.
2. At vertical breaks cuts or fills will be given to both grades.
3. See tables at the end of this section for staking intervals and tolerances

9. *STORM DRAINS AND SEWERS*

1. One line of stakes will be set prior to excavation after staking areas are ready for stakes, i.e. cleared and necessary grubbing completed.
2. The offset and side will be determined by discussion with the Engineer, Survey Party Chief and Contractor.
3. Cuts and fills will be to pipe flowline at plan grades
4. See tables at the end of this section for staking intervals and tolerances

10. *JUNCTION STRUCTURES, CHAMBERS AND MAINTENANCE HOLES*

1. One stake will be provided to control the location of the beginning of pipe and one will be set to control the end of pipe.
2. Stub outs will have one stake for direction.
3. These stakes may be set at the same time as stakes for the main line of the storm drain or sewer.
4. Cuts and fills will be shown to flow line of referenced points.
5. The offset line for staking will be determined in the field by discussion between the Engineer, Survey Party Chief and the Contractor.

11. *STORM SEWER CATCH BASINS*

1. Two stakes will be set to control the location of catch basins (3 if the CB is fourteen feet or longer).
2. Catch Basin stakes will typically be set at the same time as lateral stakes.
3. Cuts and fills will be given to the flow line and top of curb and offsets will be to curb face.
4. The offset line will be determined in field by discussions between the Engineer, Survey Party Chief and the Contractor.

12. *DROP INLETS FOR STORM SEWERS*

1. One stake will be set to control the location of drop inlets.
2. Inlets and outlets will typically be staked at the same time as stakes for the main line of the storm drain.

13. *DRY UTILITIES/NON GRAVITY FLOW UTILITIES*

Unless otherwise agreed to by the Engineer, the survey crew will not normally stake utilities unless specified in the bid documents. Utilities can usually be built from rough grade stakes or curb stakes.

14. *PARKING LOTS*

1. Set or recover boundary corner monuments and set a benchmark for future reference.
2. The Survey Division will set stakes necessary for construction for:
   a. Planter and island curbs.
   b. Longitudinal concrete gutters.
   c. Paving stakes where there is more than 40 feet between curbs, gutters, alleys, driveways and walks.
   d. Paving stakes will be set no closer than a 25' grid.
   e. Stakes will not be set for items that have to be scaled off the plan for location.

15. *WATER LINES*

1. One line of stakes will be set for the water line at angle points, begin and end of horizontal and vertical curves. Typically at 50 foot stations through tangents and 25 foot stations through curves. Fire hydrants, blow offs, air relief valves, and new water meter box locations will also be staked. These stakes will vary from one to four stakes per item depending on field conditions and if new curb and gutter is also being installed.
2. The offset and side will be determined by discussion with the Engineer, Survey Party Chief and Contractor.
3. Cuts, if applicable, will be to pipe flowline at plan grades. Finish grade, if applicable, may need to be staked at fire hydrants, air relief valves, blow offs, and new water meter boxes.

ATTACHMENT A

STANDARD INTERVALS FOR CONSTRUCTION STAKING

Curves will be divided into equal parts between BC and EC. Intervals refer to arc distance on the long side of concentric curves and are maximum limits

TYPE OF STAKES	TANGENT	CURVES (RADIUS IN FEET)							
		<50	51 - 75	76 - 100	101 - 150	151 - 200	201 - 250	251 - 500	>500
	INTERVALS IN FEET								
SLOPE AT ALL RATES	50	25	25	25	25	25	25	40	50
PAVING (ROUGH, SUB AND FINISHED GRADE) ALL RATES	50	25	25	25	25	25	25	40	50
PCC CURBS @ RATE <0.5%	12.5	10	10	10	10	12.5	12.5	12.5	12.5
PC C CURBs @ RATE = >0.5%	25	10	10	10	10	15	15	20	25
TYPE A OR B CURB (ALL RATES)	25	10	10	10	10	15	15	20	25
SEWER (ALL RATES)	25	10	10	10	10	15	15	20	20
STORM DRAIN (ALL RATES)	25	10	10	10	10	15	15	20	20
RETAINING WALL AND BULKHEAD ALL RATES	25	6	8	10	15	15	20	20	25

ATTACHMENT B

CONSTRUCTION ACCURACY SPECIFICATIONS

TYPE OF STAKES	HORIZONTAL ACCURACY (FEET)		VERTICAL ACCURACY (FEET)
	STATIONING	ALIGNMENT	ELEVATIONS
CLEARING AND GRUBBING	1.0	1.0	N/A
REMOVALS	0.5	0.5	N/A
SLOPE STAKES	0.5	0.1	0.1
ROUGH GRADE	0.5	0.5	0.1
SUBGRADE	0.5	0.5	0.05
FINISHED GRADE	0.2	0.2	0.05
CURB STAKES	0.2	0.01	0.05
FLOW LINE STAKES	0.2	0.05	0.05
SEWER STAKES	0.2	0.1	0.05
STORM DRAIN STAKES	0.2	0.1	0.05
WATER LINES	0.2	0.1	0.05
BIKEWAY STAKES	0.3	0.1	0.05
WALL STAKES	0.2	0.05	0.1
PILE STAKES	0.05	0.05	0.1
BUILDING STAKES	0.05	0.05	0.03
BRIDGE STAKES	0.05	0.05	0.03

APPENDIX B

DRAWINGS

STANDARD PLANS

DIST	COUNTY	ROUTE	POST MILES TOTAL PROJECT	SHEET NO.	TOTAL SHEETS

REGISTERED CIVIL ENGINEER

May 1, 2006
PLANS APPROVAL DATE

The State of California or its officers or agents shall not be responsible for the accuracy or completeness of electronic copies of this plan sheet.

REGISTERED PROFESSIONAL ENGINEER Greg W. Edwards No. C36386 Exp. 6-30-06 CIVIL STATE OF CALIFORNIA

To get to the Caltrans web site, go to: http://www.dot.ca.gov

NOTES:

Unless otherwise specified in the special provisions, all temporary warning signs shall have black legend on orange background.

California code are designated by (CA). Otherwise, Federal (MUTCD) codes are shown.

TYPICAL LANE CLOSURE WITH REVERSIBLE CONTROL

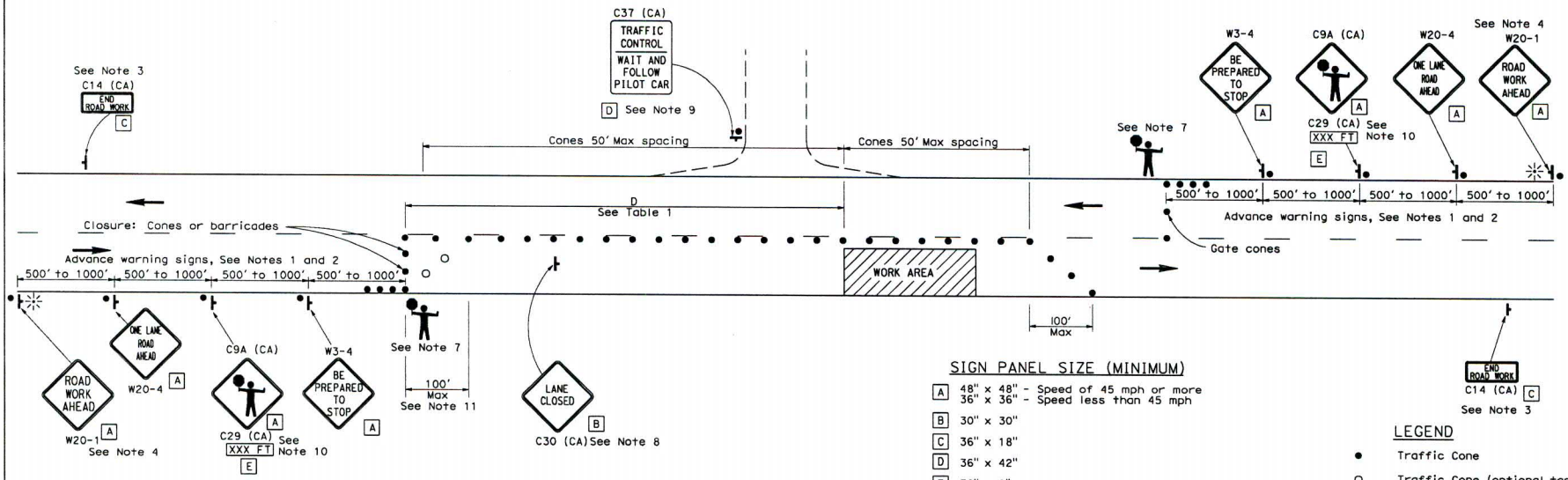

SIGN PANEL SIZE (MINIMUM)

- A 48" x 48" - Speed of 45 mph or more
  36" x 36" - Speed less than 45 mph
- B 30" x 30"
- C 36" x 18"
- D 36" x 42"
- E 36" x 9"

LEGEND

- ● Traffic Cone
- ○ Traffic Cone (optional taper)
- Temporary Sign
- Direction of Travel
- Portable Flashing Beacon
- Flagger

NOTES:

1. Where approach speeds are low, advance warning signs may be placed at 300' spacing, and closer in urban areas.
2. Each advance warning sign in each direction of travel shall be equipped with at least two flags for daytime closure. Each flag shall be at least 16" x 16" in size and shall be orange or fluorescent red-orange in color. Flashing beacons shall be placed at the locations indicated for lane closure during hours of darkness.
3. A C14 (CA) "END ROAD WORK" sign, as appropriate, shall be placed at the end of the lane control unless the end of work area is obvious, or ends within a larger project's limits.
4. If the W20-1 sign would follow within 2000' of a stationary W20-1 or C11 (CA) "ROAD WORK NEXT _____MILES", use a W20-4 sign for the first advance warning sign.
5. All cones used for lane closures during the hours of darkness shall be fitted with retroreflective bands (or sleeves) as specified in the specifications.
6. Portable delineators, placed at one-half the spacing indicated for traffic cones, may be used instead of cones for daytime closures only.
7. Additional advance flaggers may be required. Flagger should stand in a conspicuous place, be visible to approaching traffic as well as approaching vehicles after the first vehicle has stopped. During the hours of darkness, the flagging-station and flagger shall be illuminated and clearly visible to approaching traffic. The illumination footprint of the lighting on the ground shall be at least 20' in diameter. Place a minimum of four cones at 50' intervals in advance of flagger station as shown.
8. Place C30 (CA) "LANE CLOSED" sign at 500' to 1000' intervals throughout extended work areas. They are optional if the work area is visible from the flagger station.
9. When a pilot car is used, place a C37 (CA) "TRAFFIC CONTROL-WAIT AND FOLLOW PILOT CAR" sign at all intersections within traffic control area. Signs shall be clean and visible at all times.
10. An optional C29 (CA) sign may be placed below the C9A (CA) sign.
11. Traffic cones or barricades may be placed on the optional taper as shown, barricades shall be Type I, II, or III.

TABLE 1

Approach Speed	Minimum D	Downgrade Minimum D *		
		-3%	-6%	-9%
mph	ft	ft	ft	ft
25 and below	155	158	165	173
30	200	205	215	227
35	250	257	271	287
40	305	315	333	354
45	360	378	400	427
50	425	446	474	507
55	495	520	553	593
60	570	598	638	686
65	645	682	728	785

* Use on sustained downgrade steeper than -3 percent and longer than 1 mile.

STATE OF CALIFORNIA
DEPARTMENT OF TRANSPORTATION

TRAFFIC CONTROL SYSTEM FOR LANE CLOSURE ON TWO LANE CONVENTIONAL HIGHWAYS

NO SCALE

T13

9-28-05

2006 STANDARD PLAN T13

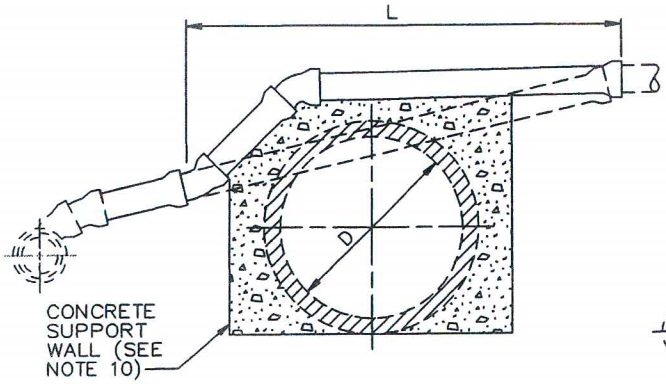

CASE A

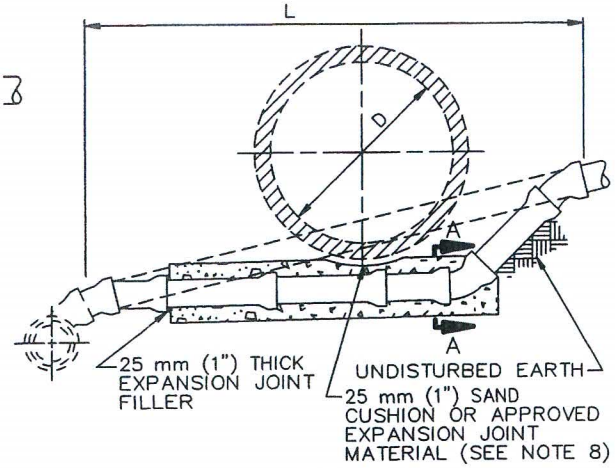

CASE D

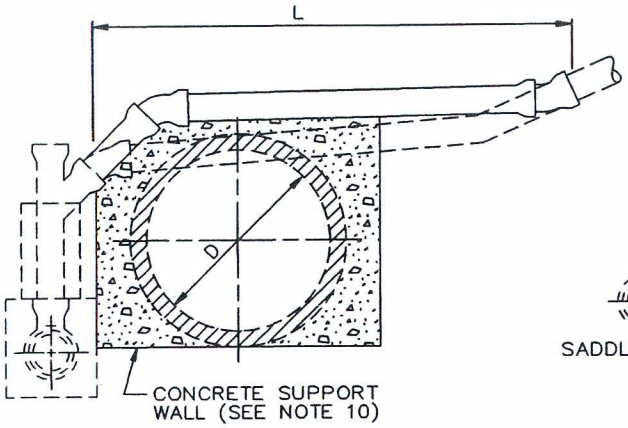

CASE B

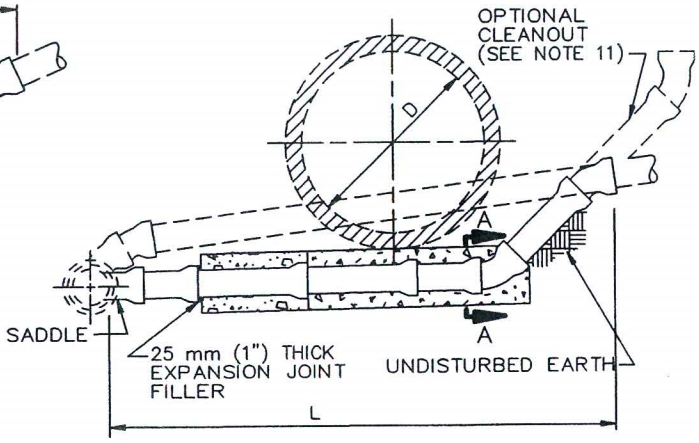

CASE E

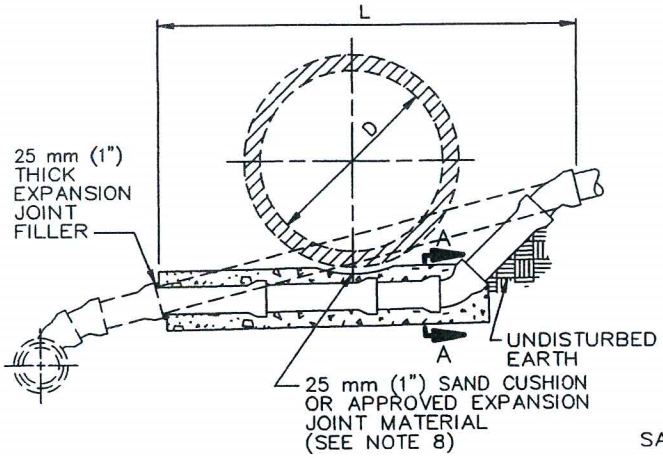

CASE C

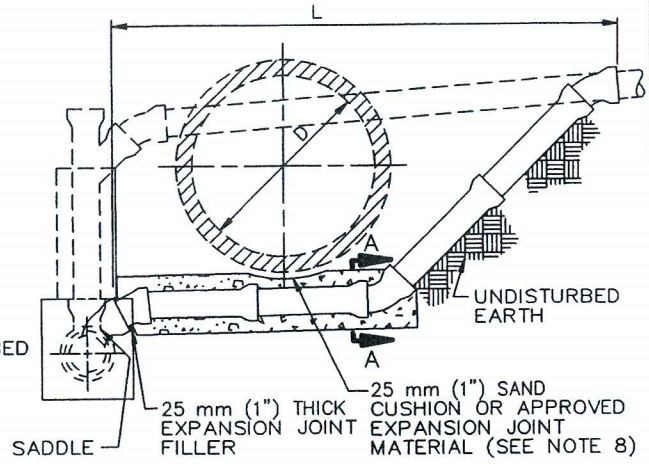

CASE F

STANDARD PLANS FOR PUBLIC WORKS CONSTRUCTION

PROMULGATED BY THE PUBLIC WORKS STANDARD, INC. GREENBOOK COMMITTEE 1984 REV. 1996

HOUSE CONNECTION REMODELING

USE WITH STANDARD SPECIFICATIONS FOR PUBLIC WORKS CONSTRUCTION

STANDARD PLAN METRIC 223-1

SHEET 1 OF 3

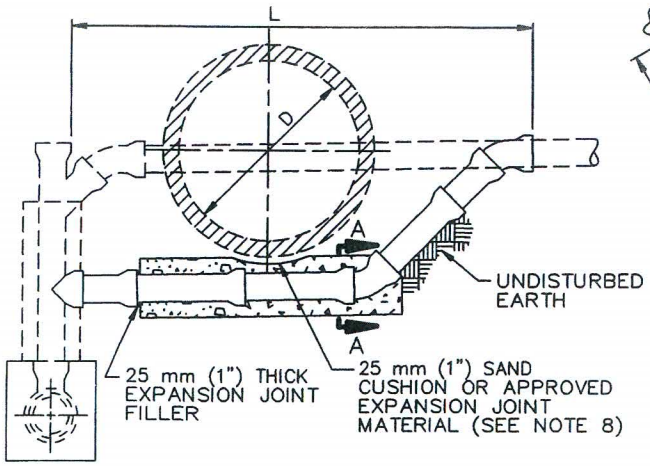

CASE G

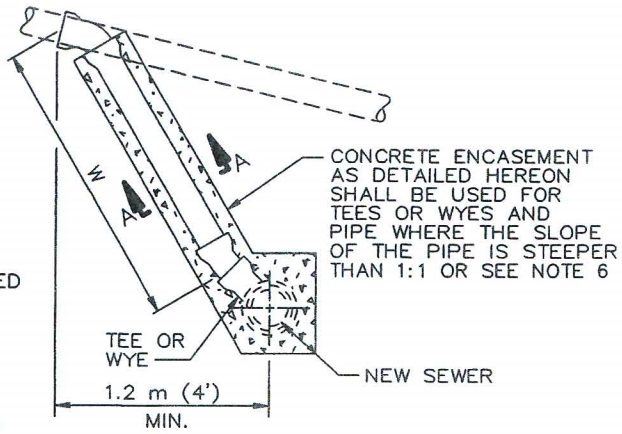

CASE R

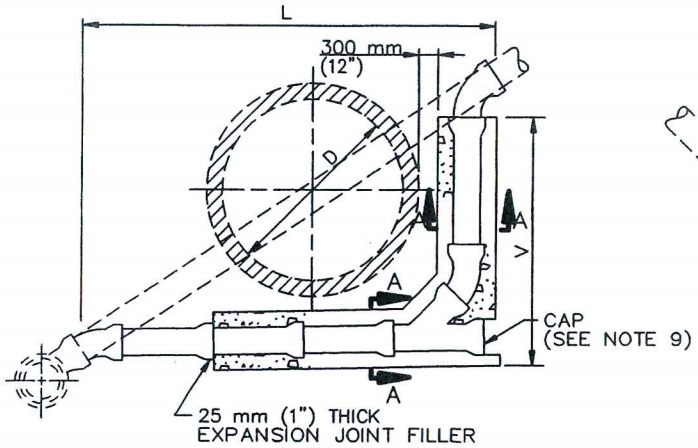

CASE H

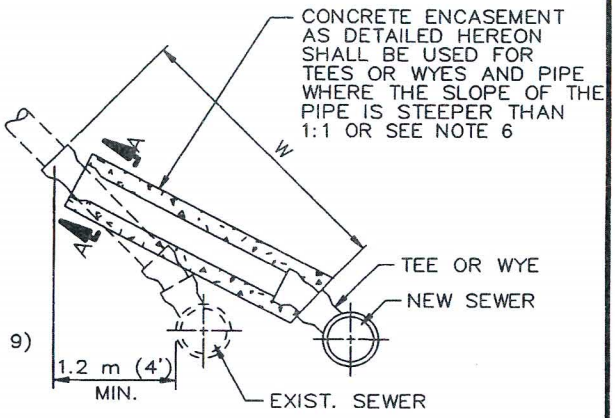

CASE S

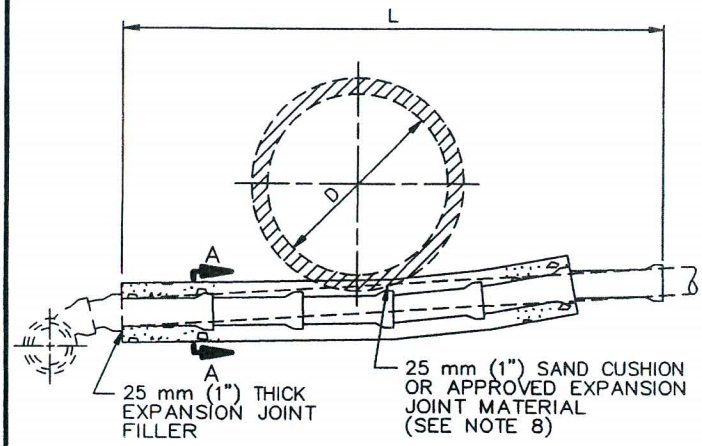

CASE K

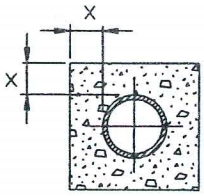

NOMINAL DIAMETER OF PIPE mm (INCHES)	MINIMUM DIMENSIONS X mm (INCHES)
150 (6)	75 (3)
200 (8)	100 (4)
250 (10)	125 (5)
300 (12)	150 (6)

SECTION A–A
CONCRETE ENCASEMENT DETAIL
(SEE NOTE 5)

STANDARD PLANS FOR PUBLIC WORKS CONSTRUCTION

HOUSE CONNECTION REMODELING

STANDARD PLAN METRIC
223–1
SHEET 2 OF 3

NOTES

1. EXCEPT AS OTHERWISE INDICATED HEREON OR ON THE PLANS, ALL HOUSE CONNECTION REMODELING SHALL CONFORM TO THE APPLICABLE PORTIONS OF SPPWC 222, HOUSE CONNECTION SEWER.

2. SEE PROJECT PLANS FOR VALUES OF D, L, V, AND W. (DIMENSION L IS THE HORIZONTAL LENGTH OF THE HOUSE CONNECTION REMODELING).

3. EXISTING SEWERS ARE INDICATED BY DASHED LINES. HOUSE CONNECTION SEWERS TO BE CONSTRUCTED ARE INDICATED BY SOLID LINES AND SHALL BE OF THE SAME MATERIAL AS THE EXISTING SEWER. THE CONTRACTOR MAY CONSTRUCT THE SEWER WITH OTHER MATERIALS ALLOWED BY SPPWC 222 PROVIDED APPROVED ADAPTORS ARE UTILIZED.

4. 1/16 (22.5°) OR 1/8 (45°) BENDS SHALL BE USED TO REMODEL OR CONSTRUCT ANY SEWER ON A CURVE OR AT ANY CHANGE IN ALIGNMENT. WHERE PHYSICAL OR GEO-METRIC LIMITATIONS PRECLUDE THE USE OF 1/16 (22.5°) OR 1/8 (45°) BENDS, THE CONTRACTOR SHALL SUBMIT TO THE ENGINEER FOR APPROVAL THE PROPOSED METHOD OF REMODELING OR CONSTRUCTION.

5. ALL HOUSE CONNECTION SEWERS TO BE CONSTRUCTED UNDER A PROPOSED CONDUIT SHALL BE ENCASED IN CONCRETE AS SHOWN HEREON. WHEN THE HOUSE CONNECTION SEWER SLOPE EXCEEDS 1:1 THE CONTRACTOR MAY, AT ITS OPTION, PLACE A CIRCULAR CROSS SECTION WITH MINIMUM COVER EQUAL TO DIMENSION "X" AS SHOWN ON SECTION A-A HEREON IN LIEU OF A SQUARE CROSS SECTION OF CONCRETE. CONCRETE BEDDING AND ENCASEMENT SHALL BE CLASS 250-C-14 (450-C-2000) AND SHALL EXTEND TO THE FIRST PIPE JOINT AT LEAST 300 mm (1') BEYOND THE OD OF EACH SIDE OF THE PROPOSED CONDUIT.

6. FOR CASE R AND S, WHEN THE SLOPE OF THE PIPE EXCEEDS 1:1, THE CONTRACTOR MAY, AT ITS OPTION, CONSTRUCT A CHIMNEY CONFORMING TO SPPWC 220 ON THE NEW SEWER IN LIEU OF CONSTRUCTING THE ENCASEMENT SHOWN HEREON.

7. FOR CASES E AND F, SADDLES SHALL BE CONNECTED EITHER TO THE LENGTH OF PIPE CONTAINING THE EXISTING TEE OR WYE OR TO THE ADJACENT DOWNSTREAM PIPE LENGTH.

8. CONDUITS TO BE INSTALLED OVER OR WITHIN 25 mm (1") OF ANY CONCRETE ENCASEMENT OR STRUCTURE, WHETHER EXISTING OR TO BE PLACED IN CONFORMITY WITH THE REQUIREMENTS HEREIN, SHALL BE INSTALLED ON A 25 mm (1") SAND CUSHION OR APPROVED EXPANSION JOINT MATERIAL. CONCRETE ENCASEMENT INSTALLED PURSUANT TO THIS STANDARD PLAN SHALL BE SEPARATED FROM EXISTING CONDUIT WITH 25 mm (1") THICK EXPANSION JOINT MATERIAL.

9. THOSE PORTIONS OF AN ABANDONED PIPE LOCATED BENEATH OR WITHIN 150 mm (6") OF A RELOCATED HOUSE CONNECTION SEWER SHALL BE REMOVED. THE EXCAVATION SHALL BE REFILLED TO THE GRADE OF THE NEW PIPE INVERT WITH CLASS 60-E-0.7 (100-E-100) CONCRETE. THE CONTRACTOR MAY, AT ITS OPTION, SUBSTITUTE MECHANICALLY COMPACTED BACKFILL IN LIEU OF THE CLASS 60-E-0.7 (100-E-100) CONCRETE. THOSE PORTIONS OF ABANDONED PIPE NOT REMOVED SHALL BE SEALED. WHERE CAPS ARE USED, THEY SHALL BE SEALED BY FILLING THE SPACE ABOVE THE CAP WITH SAND AND A 25 mm (1") THICK COATING OF TYPE "F" MORTAR.

10. SUPPORT WALLS SHALL CONFORM TO SPPWC 224.

11. WHEN INDICATED ON THE PLANS OR THE SPECIAL PROVISIONS, A CLEANOUT SHALL BE CONSTRUCTED IN CONJUNCTION WITH CASE E AS FOLLOWS:

    A. SUBSTITUTE A "Y" FOR THE 45° BEND.
    B. PLACE A 45° BEND ON THE UPPER END OF THE "Y".
    C. CAP TOP OF 45° BEND WITH A CAP AND SEAL WITH 25 mm (1") THICK TYPE "F" MORTAR AROUND THE CIRCUMFERENCE OF THE CAP.

NK

SAN LUIS OBISPO COUNTY
DEPARTMENT OF PUBLIC WORKS
Noel King, Director

County Government Center, Room 207 • San Luis Obispo CA 93408 • (805) 781-5252
Fax (805) 781-1229 email address: pwd@co.slo.ca.us

July 15, 2002

PROCEDURAL MEMORANDUM 0-3 (Revised)

TO: Division Heads
Hydraulics Personnel

FROM: Director of Public Works NK 7/17/02

SUBJECT: Waterline Disinfection Procedures

The following memorandum outlines the revised procedures to be followed by laboratory personnel, water operators, inspectors and contractors for the disinfection and testing of new waterline extensions and/or water mains. This procedure is an extraction from the American Waterworks Association (AWWA) Standards for Disinfecting Water Mains (C651-99) and the new drinking water requirements from the California Department of Health Services. **Note: This Memorandum should be included in specifications for all waterline projects.**

This standard presents essential procedures for disinfecting new and repaired water mains, including installation of fire hydrants. All new water mains shall be disinfected before they are placed in service. All water mains taken out of service for inspection, repair, or other activities that might lead to contamination of water shall be disinfected before they are returned to service. Additionally, steps shall be taken to prevent contaminated materials from entering the water main during storage, construction, or repair.

Any activity associated with this procedure that may disrupt or affect the overall water system in regard to: system pressure, water supplied to consumers, contamination of existing lines, or other major events must be cleared through the Water Quality Manager prior to commencing that activity.

BASIC DISINFECTION PROCEDURE

The basic disinfection procedure shall be:

1. Inspect all materials to be used to insure the integrity of the materials.

2. Prevent contaminating materials from entering the water main during storage, construction, or repair and noting potential contamination at the construction site.

3. Remove, by flushing, those materials that may have entered the water main.

4. Chlorinate any residual contamination that remains in the new water main using the "continuous-feed" method as described below. Note that "tablet/granule" and "slug" methods are no longer acceptable.

Before the main is chlorinated, it shall be filled to remove air pockets and flushed to remove particles. The flushing velocity in the main shall not be less than 2.5 ft/s.

Water supplied from a temporary backflow-protected connection to the existing distribution system or other approved supply source shall flow at a constant metered rate into the newly installed water main. The point of entry shall not be more than 5 feet from the beginning of the new line.

Liquid Sodium hypochlorite solution conforming to ANSI/AWWA B300 standards shall be fed at or before the entry point in an amount sufficient to produce not less than 25 mg/L of free chlorine residual throughout the new main and its appurtenances. Chlorine application shall not cease until the entire main is filled with the heavily chlorinated water.

The chlorinated water shall be retained in the main for a minimum of 24 hours, during which time all valves and hydrants in the treated section shall be operated to ensure disinfection of the appurtenances. At the end of the 24 hour period, the treated water in all portions of the main shall have a free chlorine residual of not less than 10 mg/L.

FINAL FLUSHING

1. Clear the main of heavily chlorinated water. After a 24-hour retention period, heavily chlorinated water should not remain in prolonged contact with pipe. In order to prevent damage to the pipe lining or to prevent corrosion damage to the pipe itself, the heavily chlorinated water shall be flushed from the main fittings, valves, and branches until chlorine measurements show that the concentration in the water leaving the main is not higher than that generally prevailing in the distribution system or acceptable for domestic use (typically 2ppm).

2. Dispose of heavily chlorinated water. The environment to which the chlorinated water is to be discharged shall be inspected. If there is any question that the chlorinated discharge will cause damage to the environment, then a neutralizing chemical shall be applied to the water to be wasted to neutralize thoroughly the chlorine residual remaining in the water. Where necessary, Federal, State and local regulatory agencies should be contacted to determine special provisions for the disposal of heavily chlorinated water.

BACTERIOLOGICAL TESTS

1. **Standard conditions.** After final flushing and before the new water main is connected to the distribution system, two consecutive sets of acceptable samples, taken at least 24 hours apart, shall be collected from the new main. At least one set of samples shall be collected from every 1,200 ft of the new water main, plus one set from the end of the line and at least one set from each branch. All samples shall be tested for bacteriological (chemical and physical) quality in accordance with Standard Methods for the Examination of Water and Wastewater; and shall show

the absence of coliform organisms. A standard plate count and general physical analysis (odor, turbidity, color) are also required.

2. **Sampling procedure.** Samples for bacteriological analysis shall be collected by Water Treatment Operators or laboratory personnel in sterile bottles with sodium thiosulfate as required by Standard Methods for the Examination of Water and Wastewater. No hose or fire hydrant shall be used in collection of samples. A combination blow off and sampling tap for mains up to including eight-inch diameter may be used as corporation stop that is installed in the main with a copper-tube gooseneck assembly. After samples have been collected, the gooseneck assembly may be removed and retained for future use. Each sample site must be positioned so that it may be flushed for several minutes (during sampling) without contamination of the hose bib, sample bottles, etc. when samples are being taken.

3. **Notification procedure.** Initial arrangement for scheduling sampling of new/repaired main shall be made with the Water Quality Manager. The Water Quality Manager will arrange sampling dates and time with the Water System Operator in charge of the effected system. The Water System Operator shall notify the Engineering Inspector of the time and particular location that samples are to be taken. The Inspector shall insure that the Contractor in charge of the line has installed adequate sampling stations (see attached drawing) on the days that samples are to be taken.

   Once it has been determined that all bacteriological and general physical analysis meet current requirements, the Water Quality Manager shall notify the in-charge Water System Operator of the same. The Operator shall in turn notify the Engineering Inspector in charge of the job. It shall be the Inspector's responsibility to notify the contractor/property owner of the test results.

   If the test results do not meet current requirements, the same notification procedure as outlined above shall be followed. Once the contractor/property owner has been notified it shall be his responsibility to perform the following (as determined by the Water Quality Manager): flush the line, re-chlorinate the lines (for a period of 24 hours), flush to an acceptable chlorine residual level, have the line re-sampled.

4. **Analysis Charges.** Unless otherwise stated in the construction contract, the cost of the initial sampling and analysis shall be paid by the contractor/property owner. In the event that follow-up analyses are required due to failed tests, the contractor/property owner will be liable for all costs associated with the follow-up sampling and analysis.

Attachment

File: Procedural Manual

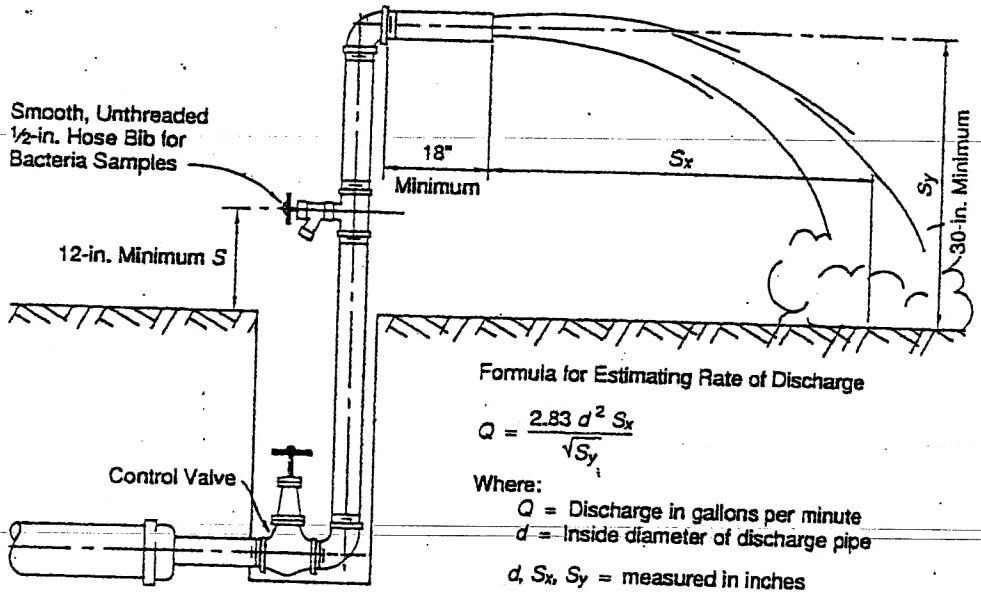

Formula for Estimating Rate of Discharge

$$Q = \frac{2.83\, d^2\, S_x}{\sqrt{S_y}}$$

Where:

Q = Discharge in gallons per minute

d = Inside diameter of discharge pipe

d, S_x, S_y = measured in inches

NOTE: This figure applies to pipes up to and including 8-in. (200 mm) diameter.

DRAWINGS