DIST	COUNTY	PROJECT	SHEET No.	TOTAL SHEETS
5	SLO	TAR SPRING CREEK BRIDGE ON BRANCH MILL ROAD	1	30

FEDERAL ID # BRLO-5949(116)

CONTRACT # 300385

QUINCY ENGINEERING, INC.
11017 COBBLEROCK DRIVE, SUITE 100
RANCHO CORDOVA, CA 95670

The County of San Luis Obispo or its officers or agents shall not be responsible for the accuracy or completeness of electronic copies of this plan sheet.

INDEX OF PLANS

1	T	TITLE SHEET
2	X	TYPICAL SECTIONS
3	L	LAYOUT
4	PS	PROFILE AND SUPERELEVATION DIAGRAM
5	DP	TEMPORARY STREAM DIVERSION PLAN
6 –10	C	CONSTRUCTION DETAILS
11–12	EC	EROSION CONTROL PLAN
13	CS	CONSTRUCTION AREA SIGNS
14	PD	PAVEMENT DELINEATION AND SIGN PLAN
15	Q	SUMMARY OF QUANTITIES
16	BR1	GENERAL PLAN
17	BR2	DECK CONTOURS
18	BR3	FOUNDATION PLAN
19	BR4	ABUTMENT LAYOUT
20	BR5	ABUTMENT DETAILS
21	BR6	TYPICAL SECTION
22	BR7	GIRDER LAYOUT
23	BR8	PC/PS BULB–TEE GIRDER (HARPED STRANDS)
24	BR9	PC/PS BULB–TEE GIRDER (MISCELLANEOUS DETAILS)
25	BR10	STRUCTURE DRAINAGE DETAILS
26	BR11	TUBULAR BICYCLE RAILING DETAILS
27	BR12	LOG OF TEST BORINGS No. 1 OF 4
28	BR13	LOG OF TEST BORINGS No. 2 OF 4
29	BR14	LOG OF TEST BORINGS No. 3 OF 4
30	BR15	LOG OF TEST BORINGS No. 4 OF 4

SAN LUIS OBISPO COUNTY
DEPARTMENT OF PUBLIC WORKS
AND TRANSPORTATION

PLANS FOR CONSTRUCTION OF

TAR SPRING CREEK BRIDGE ON BRANCH MILL ROAD

BRIDGE 49C-0459
EXISTING BRIDGE 49C-0143
Located 3 Miles East of the City of Arroyo Grande
COUNTY CONTRACT #300385
FEDERAL AID BRIDGE REPLACEMENT PROJECT #BRLO-5949(116)
TO BE SUPPLEMENTED BY STATE OF CALIFORNIA, STANDARD PLANS DATED 2010

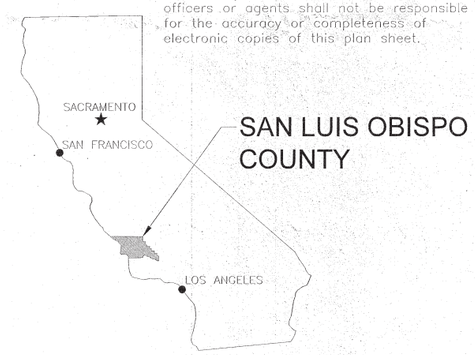

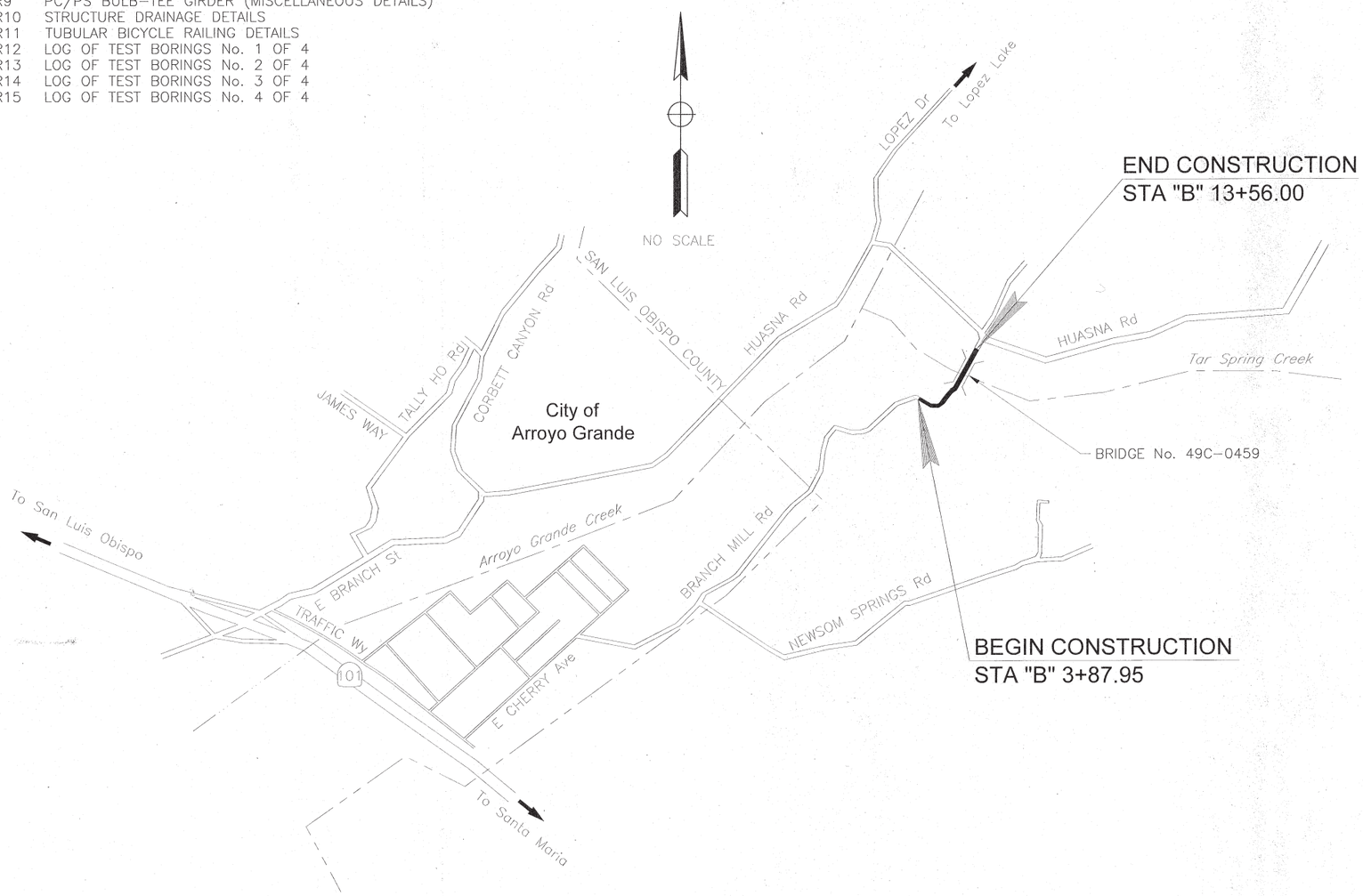

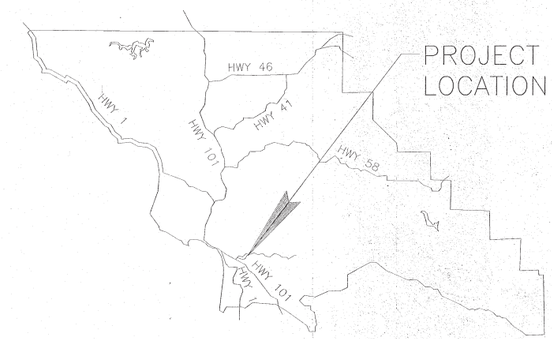

DIRECTOR OF PUBLIC WORKS
WADE HORTON

PLANS APPROVAL DATE

Mark L. Reno
PROJECT MANAGER
R.C.E. NO. C47756
12/19/2014
DATE SIGNED

REGISTERED PROFESSIONAL ENGINEER
Mark L. Reno
No. C47756
CIVIL
STATE OF CALIFORNIA

CONTRACTOR SHALL POSSESS THE CLASS, (OR CLASSES) OF LICENSE AS SPECIFIED IN THE "NOTICE TO BIDDERS"

REVISIONS	
BY	DATE

	BY	DATE
DESIGN	R. GARCIA	
DRAWN	R. GARCIA	
CHECKED		
SCALE: NO SCALE		
CONTRACT # 300385		

SAN LUIS OBISPO COUNTY
DEPARTMENT OF PUBLIC WORKS
1050 Monterey Street
San Luis Obispo, CA 93408
Phone: (805) 781-5252 FAX: (805) 781-1229

QUINCY ENGINEERING

TAR SPRING CREEK BRIDGE
ON BRANCH MILL ROAD
TITLE SHEET

SHEET No.
T-1

S:\Client\SLO-County\S13-910 Branch Mill Rd\CAD_Civil 3D 2012\S13910rab001.dwg 12/18/2014 10:59 AM

DIST	COUNTY	PROJECT	SHEET No.	TOTAL SHEETS
5	SLO	TAR SPRING CREEK BRIDGE ON BRANCH MILL ROAD OVER	2	30

REGISTERED CIVIL ENGINEER — DATE 12/19/14

REGISTERED PROFESSIONAL ENGINEER — Garrett McLaughlin No. 67687 CIVIL — STATE OF CALIFORNIA

The County of San Luis Obispo or its officers or agents shall not be responsible for the accuracy or completeness of electronic copies of this plan sheet.

QUINCY ENGINEERING, INC.
11017 COBBLEROCK DRIVE
SUITE 100
RANCHO CORDOVA, CA 95670

NOTES:

1. DIMENSIONS OF THE PAVEMENT STRUCTURES (STRUCTURAL SECTIONS) ARE SUBJECT TO TOLERANCES SPECIFIED IN THE STANDARD SPECIFICATIONS.
2. SUPERELEVATIONS ARE SHOWN ON THE SUPERELEVATION DIAGRAMS.
3. * SEE STANDARD PLAN A77Q1 FOR MIDWEST GUARD RAIL SYSTEM EMBANKMENT WIDENING FOR END TREATMENTS.
4. FOR LIMITS OF HMA DIKE SEE SHEET C-5.
5. ** SIDE SLOPES SHALL BE 6:1 BETWEEN THE FOLLOWING STATIONS:
   "B" 5+13 TO 5+29 Lt
   "B" 7+57 TO 7+73 Rt
   SIDE SLOPES SHALL TRANSITION FROM 4:1 TO 6:1 IN THE 20' PRIOR TO AND AFTER THE STATIONS LISTED.

DESIGN DATA:

V = 40 MPH
ADT(2010) = 1240
ADT(2030) = 1840
DHV = 184
R = 20
T.I. = 7.0

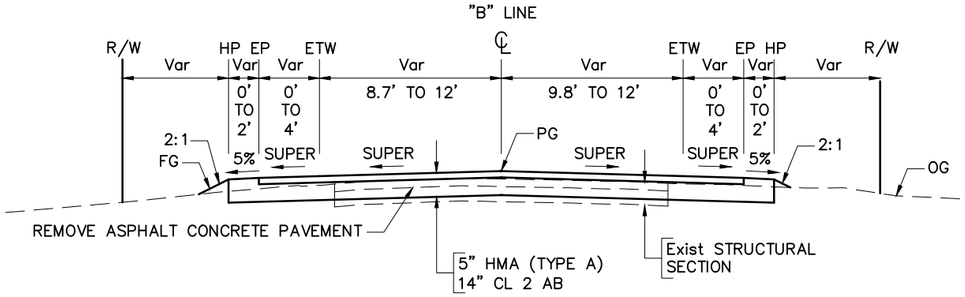

BRANCH MILL ROAD

Sta 12+56.00 TO Sta 13+56.00

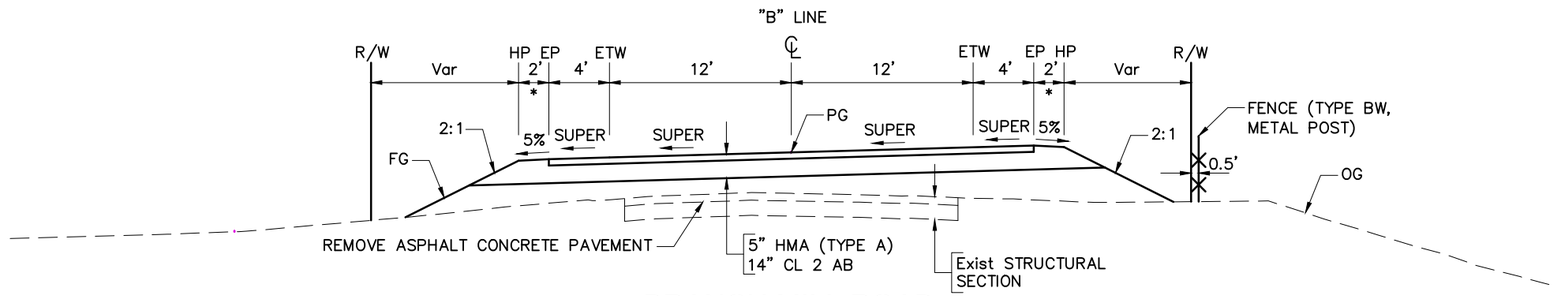

BRANCH MILL ROAD

Sta 9+71.57 EB TO Sta 12+56.00

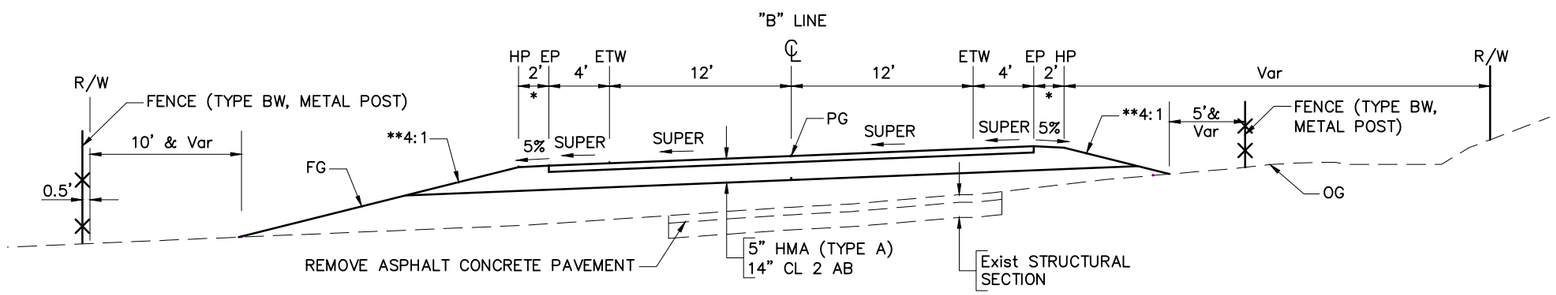

BRANCH MILL ROAD

Sta 4+87.95 TO Sta 8+64.44 BB

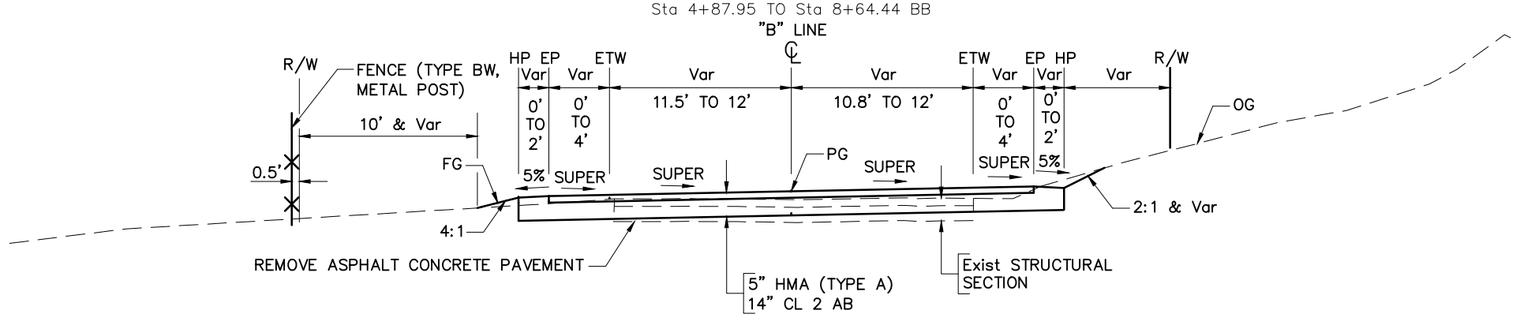

BRANCH MILL ROAD

Sta 3+87.95 TO Sta 4+87.95

	BY	DATE
DESIGN	G. MCLAUGHLIN	
DRAWN	R. GARCIA	
SCALE: NO SCALE		
CONTRACT # 300385		

SAN LUIS OBISPO COUNTY
DEPARTMENT OF PUBLIC WORKS
1050 Monterey Street
San Luis Obispo, CA 93408
Phone: (805) 781-5252 FAX: (805) 781-1229

QUINCY ENGINEERING

TAR SPRING CREEK BRIDGE ON BRANCH MILL ROAD
TYPICAL SECTIONS - BRANCH MILL ROAD
STA. 3+87.95 TO STA. 13+56.00

SHEET No. X-1

FOR REDUCED PLANS ORIGINAL SCALE IS IN INCHES 0 1 2 3

S:\Client\SLO-County\S13-910 Branch Mill Rd\CAD_Civil 3D 2012\S13910rca001.dwg 12/17/2014 12:09 PM

NOTES:

1. PG&E OVERHEAD LINES APPROXIMATELY 100' ABOVE BRANCH MILL ROAD. CONTRACTOR TO VERIFY WIRE HEIGHTS PRIOR TO BEGINNING CONSTRUCTION.
2. FOR LIMITS OF HMA DIKE SEE SHEET C-5.

UTILITY	REPRESENTATIVE	PHONE NUMBER
230 kV OH ELECTRIC	PG&E	(805) 546-3888
42" 300 psi, WATER LINE FIBER OPTIC	CENTRAL COAST WATER AUTHORITY	(805) 688-2292

LEGEND:

- ROCK SLOPE PROTECTION
- (X) CURVE NUMBER
- SURVEY CONTROL POINT
- —x—x—x—x— FENCE (TYPE BW)
- —— e(oh) —— EXISTING OVERHEAD ELECTRIC
- CCWA CENTRAL COAST WATER AUTHORITY
- —fo——(UG)—— EXISTING UNDERGROUND FIBER OPTIC LINE
- —w——w—— EXISTING UNDERGROUND WATER LINE
- REMOVE ASPHALT CONCRETE PAVEMENT

DIST	COUNTY	PROJECT	SHEET No.	TOTAL SHEETS
5	SLO	TAR SPRING CREEK BRIDGE ON BRANCH MILL ROAD OVER	3	30

REGISTERED CIVIL ENGINEER — 12/19/14 DATE

REGISTERED PROFESSIONAL ENGINEER — Garrett McLaughlin No. 67687 CIVIL — STATE OF CALIFORNIA

The County of San Luis Obispo or its officers or agents shall not be responsible for the accuracy or completeness of electronic copies of this plan sheet.

QUINCY ENGINEERING, INC.
11017 COBBLEROCK DRIVE
SUITE 100
RANCHO CORDOVA, CA 95670

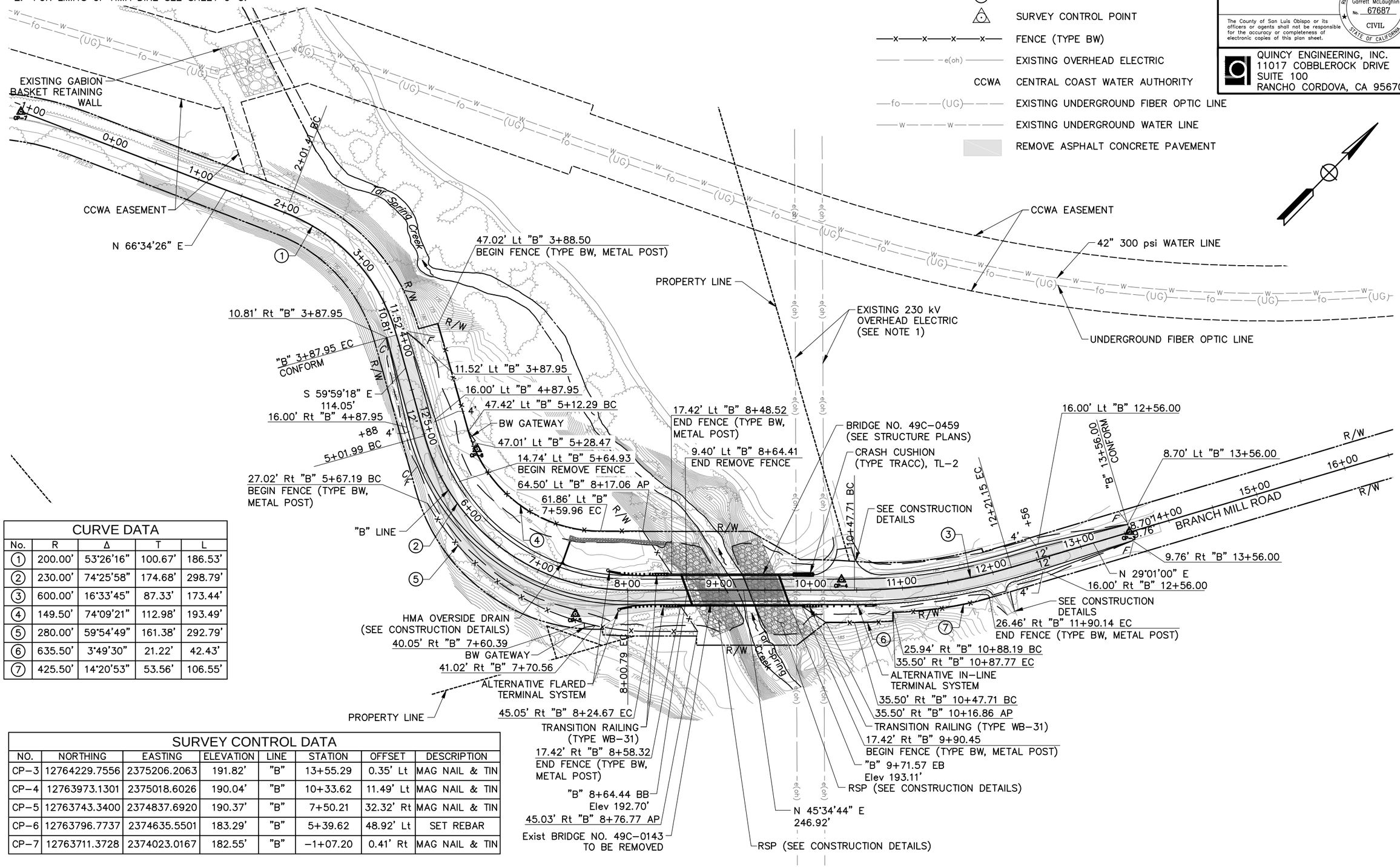

CURVE DATA

No.	R	Δ	T	L
1	200.00'	53°26'16"	100.67'	186.53'
2	230.00'	74°25'58"	174.68'	298.79'
3	600.00'	16°33'45"	87.33'	173.44'
4	149.50'	74°09'21"	112.98'	193.49'
5	280.00'	59°54'49"	161.38'	292.79'
6	635.50'	3°49'30"	21.22'	42.43'
7	425.50'	14°20'53"	53.56'	106.55'

SURVEY CONTROL DATA

NO.	NORTHING	EASTING	ELEVATION	LINE	STATION	OFFSET	DESCRIPTION
CP-3	12764229.7556	2375206.2063	191.82'	"B"	13+55.29	0.35' Lt	MAG NAIL & TIN
CP-4	12763973.1301	2375018.6026	190.04'	"B"	10+33.62	11.49' Lt	MAG NAIL & TIN
CP-5	12763743.3400	2374837.6920	190.37'	"B"	7+50.21	32.32' Rt	MAG NAIL & TIN
CP-6	12763796.7737	2374635.5501	183.29'	"B"	5+39.62	48.92' Lt	SET REBAR
CP-7	12763711.3728	2374023.0167	182.55'	"B"	-1+07.20	0.41' Rt	MAG NAIL & TIN

FOR REDUCED PLANS ORIGINAL SCALE IS IN INCHES 0 1 2 3

	BY	DATE
DESIGN	R. GARCIA	
DRAWN	R. GARCIA	
SCALE: 1"=50'		
CONTRACT # 300385		

SAN LUIS OBISPO COUNTY
DEPARTMENT OF PUBLIC WORKS
1050 Monterey Street
San Luis Obispo, CA 93408
Phone: (805) 781-5252 FAX: (805) 781-1229

QUINCY ENGINEERING

TAR SPRING CREEK BRIDGE ON BRANCH MILL ROAD
LAYOUT
STA. 3+87.95 TO STA. 13+56.00

SHEET No. L-1

S:\Client\SLO-County\S13-910 Branch Mill Rd\CAD_Civil 3D 2012\S13910rea001.dwg 12/17/2014 12:11 PM

DIST	COUNTY	PROJECT	SHEET No.	TOTAL SHEETS
5	SLO	TAR SPRING CREEK BRIDGE ON BRANCH MILL ROAD OVER	4	30

Garrett McLaughlin 12/19/14
REGISTERED CIVIL ENGINEER DATE

REGISTERED PROFESSIONAL ENGINEER Garrett McLaughlin No. 67687 CIVIL STATE OF CALIFORNIA

The County of San Luis Obispo or its officers or agents shall not be responsible for the accuracy or completeness of electronic copies of this plan sheet.

QUINCY ENGINEERING, INC.
11017 COBBLEROCK DRIVE
SUITE 100
RANCHO CORDOVA, CA 95670

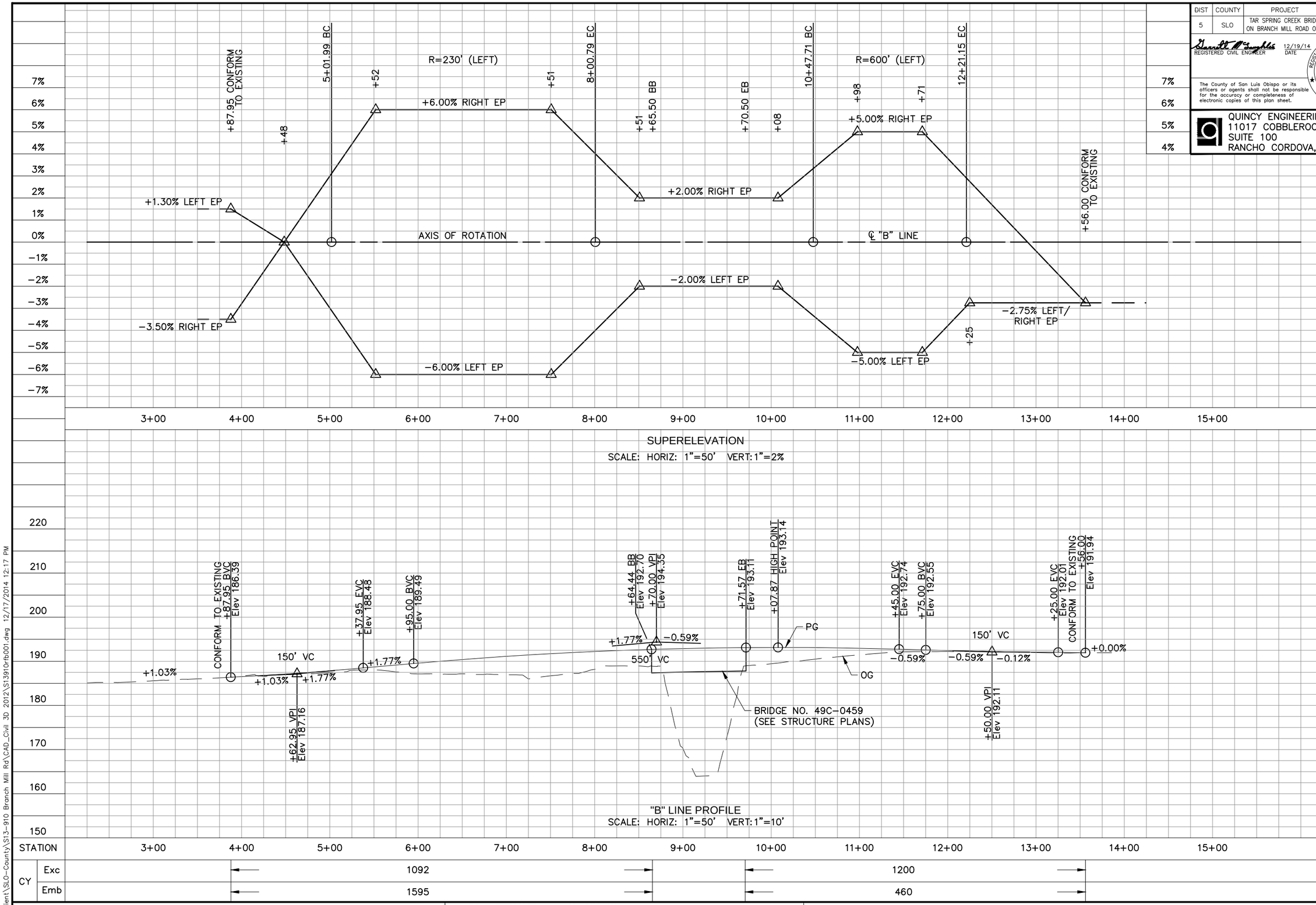

FOR REDUCED PLANS ORIGINAL SCALE IS IN INCHES 0 1 2 3

	BY	DATE
DESIGN	R. GARCIA	
DRAWN	R. GARCIA	
SCALE: AS SHOWN		
CONTRACT # 300385		

SAN LUIS OBISPO COUNTY
DEPARTMENT OF PUBLIC WORKS
1050 Monterey Street
San Luis Obispo, CA 93408
Phone: (805) 781-5252 FAX: (805) 781-1229

QUINCY ENGINEERING

TAR SPRING CREEK BRIDGE ON BRANCH MILL ROAD
PROFILE AND SUPERELEVATION DIAGRAM
STA. 3+87.95 TO STA. 13+56.00

SHEET No.
PS-1

S:\Client\SLO-County\S13-910 Branch Mill Rd\CAD_Civil 3D 2012\S13910rfb001.dwg 12/17/2014 12:17 PM

DIST	COUNTY	PROJECT	SHEET No.	TOTAL SHEETS
5	SLO	TAR SPRING CREEK BRIDGE ON BRANCH MILL ROAD OVER	5	30

REGISTERED CIVIL ENGINEER — DATE 12/19/14

REGISTERED PROFESSIONAL ENGINEER — Garrett McLaughlin No. 67687 CIVIL — STATE OF CALIFORNIA

The County of San Luis Obispo or its officers or agents shall not be responsible for the accuracy or completeness of electronic copies of this plan sheet.

QUINCY ENGINEERING, INC.
11017 COBBLEROCK DRIVE
SUITE 100
RANCHO CORDOVA, CA 95670

NOTES:

1. THIS PLAN ACCURATE FOR TEMPORARY STREAM DIVERSION ONLY.
2. EXACT LENGTH AND LOCATION OF PIPE TO BE DETERMINED IN THE FIELD BY THE ENGINEER.
3. EXACT LOCATION OF DIVERSION DAMS TO BE APPROVED IN THE FIELD BY THE ENGINEER.

TEMPORARY DIVERSION PIPES		
MIN PIPE DIAMETER	QUANTITY OF PIPES	DESIGN FLOW
18 INCHES	2	11 CFS

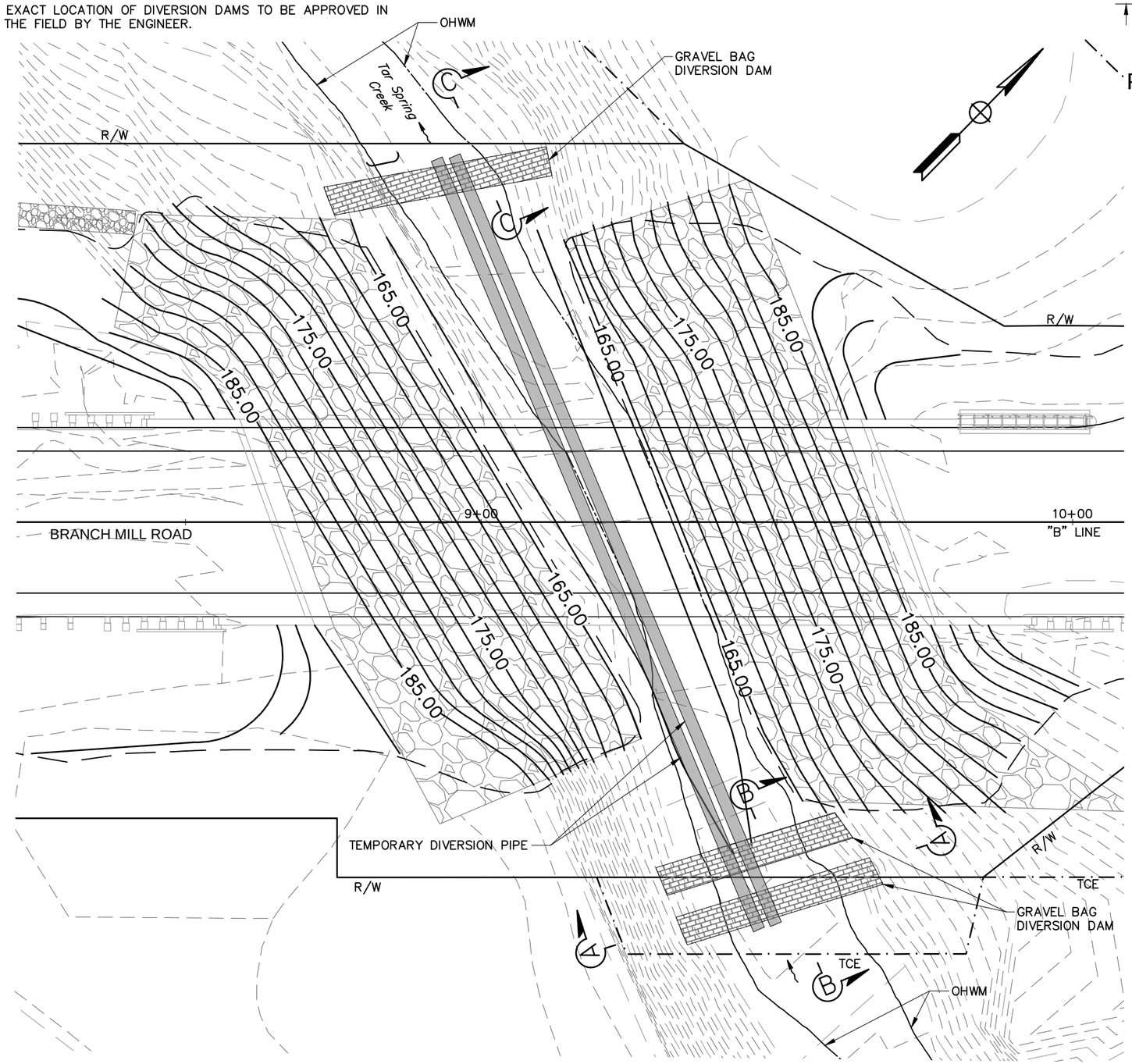

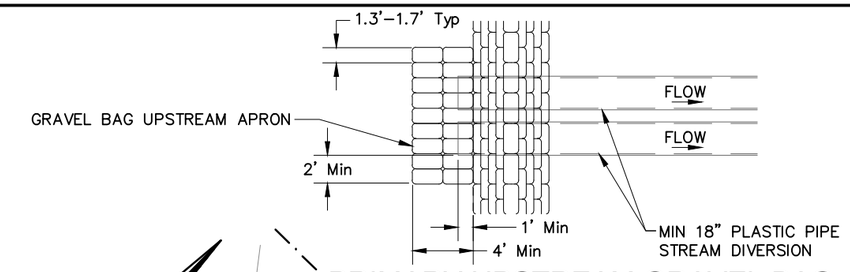

PRIMARY UPSTREAM GRAVEL BAG DIVERSION DAM END DETAIL

NO SCALE

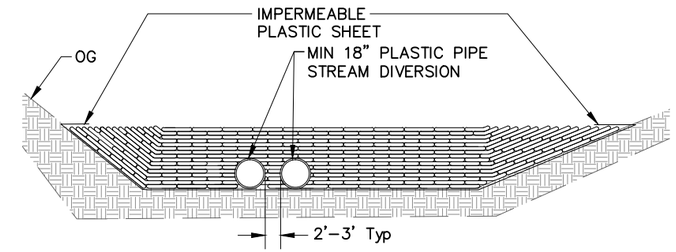

SECTION A-A

NO SCALE

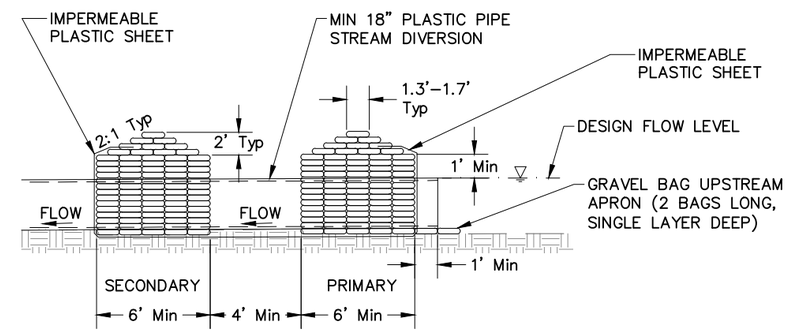

SECTION B-B

NO SCALE

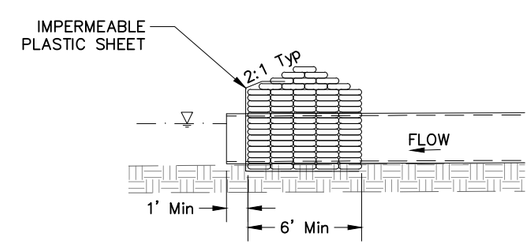

SECTION C-C

NO SCALE

	BY	DATE
DESIGN	R. GARCIA	
DRAWN	R. GARCIA	
SCALE: 1"=10'		
CONTRACT # 300385		

SAN LUIS OBISPO COUNTY
DEPARTMENT OF PUBLIC WORKS
1050 Monterey Street
San Luis Obispo, CA 93408
Phone: (805) 781-5252 FAX: (805) 781-1229

QUINCY ENGINEERING

TAR SPRING CREEK BRIDGE ON BRANCH MILL ROAD
TEMPORARY STREAM DIVERSION PLAN

SHEET No. DP-1

FOR REDUCED PLANS ORIGINAL SCALE IS IN INCHES 0 1 2 3

S:\Client\SLO-County\S13-910 Branch Mill Rd\CAD_Civil 3D 2012\S13910rdp001.dwg 12/30/2014 1:16 PM

DIST	COUNTY	PROJECT	SHEET No.	TOTAL SHEETS
5	SLO	TAR SPRING CREEK BRIDGE ON BRANCH MILL ROAD OVER	6	30

REGISTERED CIVIL ENGINEER — DATE 12/19/14

REGISTERED PROFESSIONAL ENGINEER — Garrett McLaughlin No. 67687 CIVIL — STATE OF CALIFORNIA

The County of San Luis Obispo or its officers or agents shall not be responsible for the accuracy or completeness of electronic copies of this plan sheet.

QUINCY ENGINEERING, INC.
11017 COBBLEROCK DRIVE
SUITE 100
RANCHO CORDOVA, CA 95670

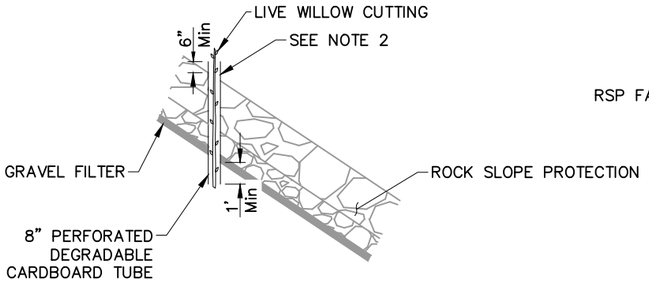

WILLOW CUTTING PLANT TUBE RSP DETAIL

NO SCALE

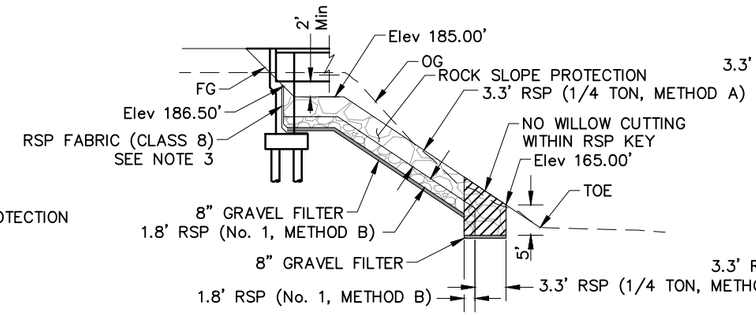

SECTION A-A

NO SCALE

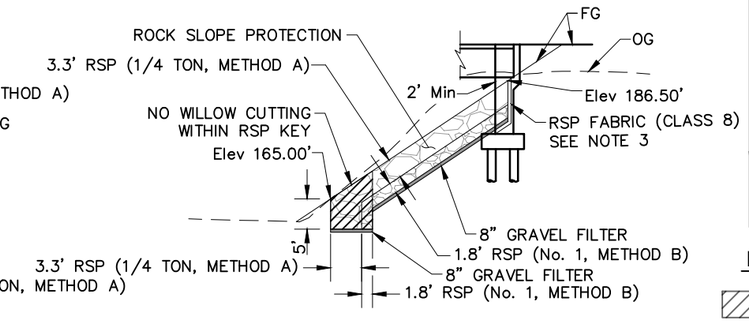

SECTION B-B

NO SCALE

LEGEND:

- NO WILLOW CUTTING PLANTING WITHIN THIS AREA
- WILLOW CUTTING PLANT TUBE

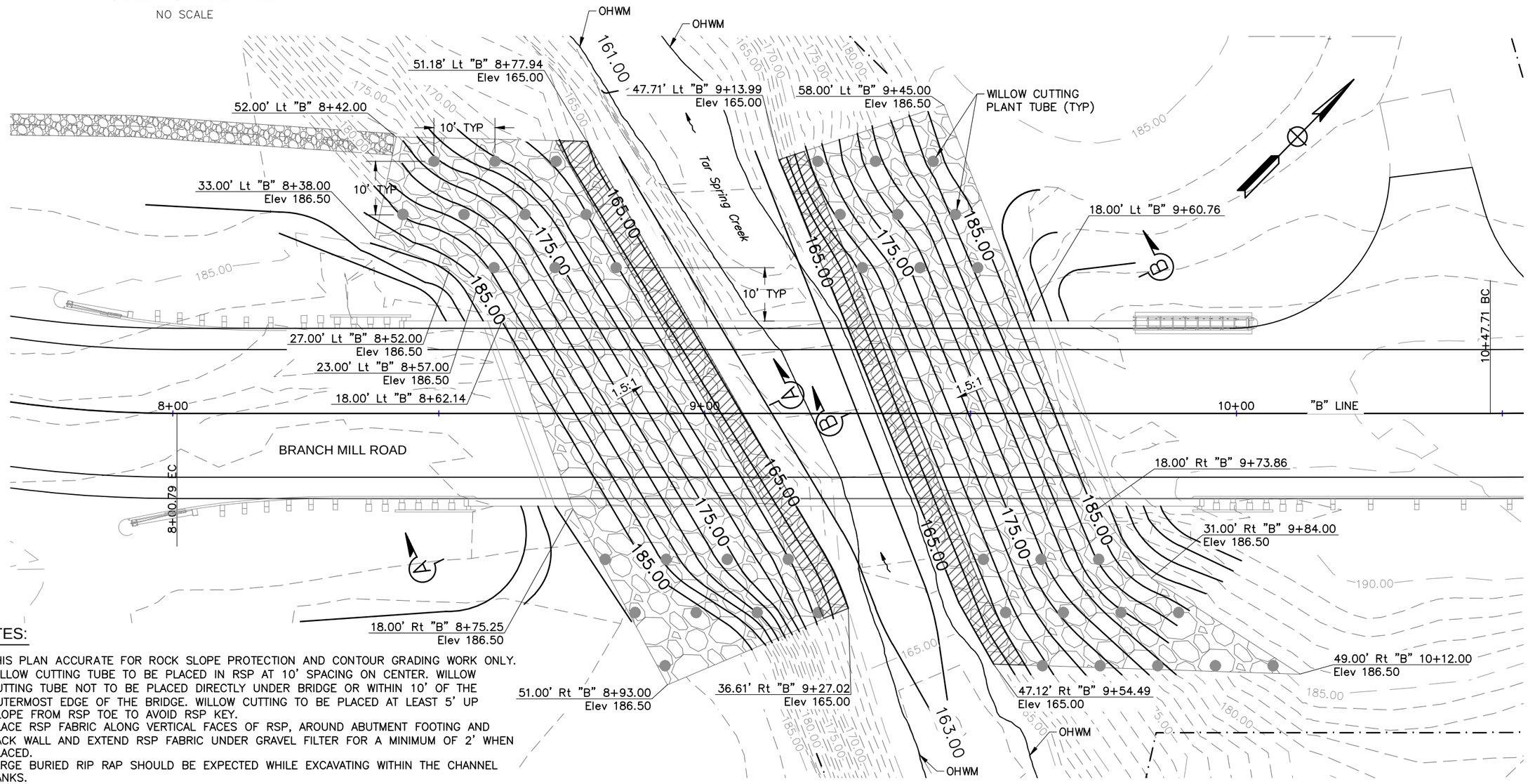

NOTES:

1. THIS PLAN ACCURATE FOR ROCK SLOPE PROTECTION AND CONTOUR GRADING WORK ONLY.
2. WILLOW CUTTING TUBE TO BE PLACED IN RSP AT 10' SPACING ON CENTER. WILLOW CUTTING TUBE NOT TO BE PLACED DIRECTLY UNDER BRIDGE OR WITHIN 10' OF THE OUTERMOST EDGE OF THE BRIDGE. WILLOW CUTTING TO BE PLACED AT LEAST 5' UP SLOPE FROM RSP TOE TO AVOID RSP KEY.
3. PLACE RSP FABRIC ALONG VERTICAL FACES OF RSP, AROUND ABUTMENT FOOTING AND BACK WALL AND EXTEND RSP FABRIC UNDER GRAVEL FILTER FOR A MINIMUM OF 2' WHEN PLACED.
4. LARGE BURIED RIP RAP SHOULD BE EXPECTED WHILE EXCAVATING WITHIN THE CHANNEL BANKS.

FOR REDUCED PLANS ORIGINAL SCALE IS IN INCHES 0 1 2 3

	BY	DATE
DESIGN	R. GARCIA	
DRAWN	R. GARCIA	
SCALE: 1"=10'		
CONTRACT # 300385		

SAN LUIS OBISPO COUNTY
DEPARTMENT OF PUBLIC WORKS
1050 Monterey Street
San Luis Obispo, CA 93408
Phone: (805) 781-5252 FAX: (805) 781-1229

QUINCY ENGINEERING

TAR SPRING CREEK BRIDGE ON BRANCH MILL ROAD
CONSTRUCTION DETAILS – ROCK SLOPE PROTECTION AND CONTOUR GRADING

SHEET No. C-1

S:\Client\SLO-County\S13-910 Branch Mill Rd\CAD_Civil 3D 2012\S13910rga001.dwg 12/17/2014 12:32 PM

NOTES:

1. THIS PLAN ACCURATE FOR CONSTRUCTION ACCESS ROAD WORK ONLY.
2. NO STORAGE OR PLACEMENT OF CONSTRUCTION MATERIAL SHALL BE PLACED WITHIN THE DWR EASEMENT.
3. TEMPORARY CONSTRUCTION CROSSING AND CONTRACTOR ACCESS ROAD SHALL NOT REMOVE OR DISTURB ANY DWR FACILITIES INCLUDING THE EXISTING GABION BASKET RETAINING WALL LOCATION ALONG TAR SPRING CREEK.
4. TEMPORARY ACCESS ROAD SHALL FOLLOW LAYOUT OF EXISTING FARM ROAD WHEN POSSIBLE.
5. DURING NON WORKING HOURS TEMPORARY CONSTRUCTION CROSSING SHALL BE LOCKED WITH ACCESS PROVIDED FOR LOCAL FARMERS AND EMERGENCY VEHICLES.
6. SWPP TYPICALLY HAS AN ANNUAL OUTAGE THE FIRST THREE WEEKS OF NOVEMBER. IN THE EVENT THE TEMPORARY CROSSING IS STILL NECESSARY DURING THIS TIME, PLEASE CONTACT THE SAN JOAQUIN FIELD DIVISION AT (661) 858–5513 THREE WEEKS PRIOR TO THE OUTAGE. VEHICLES ALLOWED DURING THE OUTAGE WILL BE RESTRICTED.
7. A SEVEN (7) DAY ADVANCE NOTIFICATION IS REQUIRED PRIOR TO STARTING WORK WITHIN THE DWR EASEMENT. CONTACT THE DWR, DIVISION OF ENGINEERING, ENCROACHMENT PERMIT SECTION, SACRAMENTO, CALIFORNIA AT (800) 600–4397. CCWA AT (805) 697–5235 AND THE SAN JOAQUIN FIELD DIVISION SHALL BE SIMULTANEOUSLY NOTIFIED AT (661) 858–5513.
8. COMMUNICATION AND CONTROL CABLES CONNECTED WITH THE OPERATION OF THE SWPP ARE BURIED ALONG EITHER OR BOTH SIDES OF THE PIPELINE WITHIN DWR EASEMENT, AS APPROXIMATELY DEPICTED ON THIS DRAWING. PRIOR TO ANY EXCAVATION IN THIS AREA, THE CABLE SHALL BE LOCATED AND EXPOSED BY POTHOLING IN THE PRESENCE OF A DWR FIELD DIVISION REPRESENTATIVE. CALL SAN JOAQUIN FILED DIVISION AT (661) 858–5513 AT LEAST SEVEN (7) DAYS IN ADVANCE FOR AN APPOINTMENT. ALL EXCAVATIONS WITHIN THREE (3) FEET OF THE CABLE SHALL BE DONE USING HAND–HELD TOOLS ONLY.
9. ALL BACKFILL WITH THE DWR EASEMENT SHALL BE COMPACTED TO 95 PERCENT RELATIVE COMPACTION PER ASTM D 1557.

DIST	COUNTY	PROJECT	SHEET No.	TOTAL SHEETS
5	SLO	TAR SPRING CREEK BRIDGE ON BRANCH MILL ROAD OVER	7	30

Garrett McLaughlin 12/19/14
REGISTERED CIVIL ENGINEER DATE

REGISTERED PROFESSIONAL ENGINEER Garrett McLaughlin No. 67687 CIVIL STATE OF CALIFORNIA

The County of San Luis Obispo or its officers or agents shall not be responsible for the accuracy or completeness of electronic copies of this plan sheet.

QUINCY ENGINEERING, INC.
11017 COBBLEROCK DRIVE
SUITE 100
RANCHO CORDOVA, CA 95670

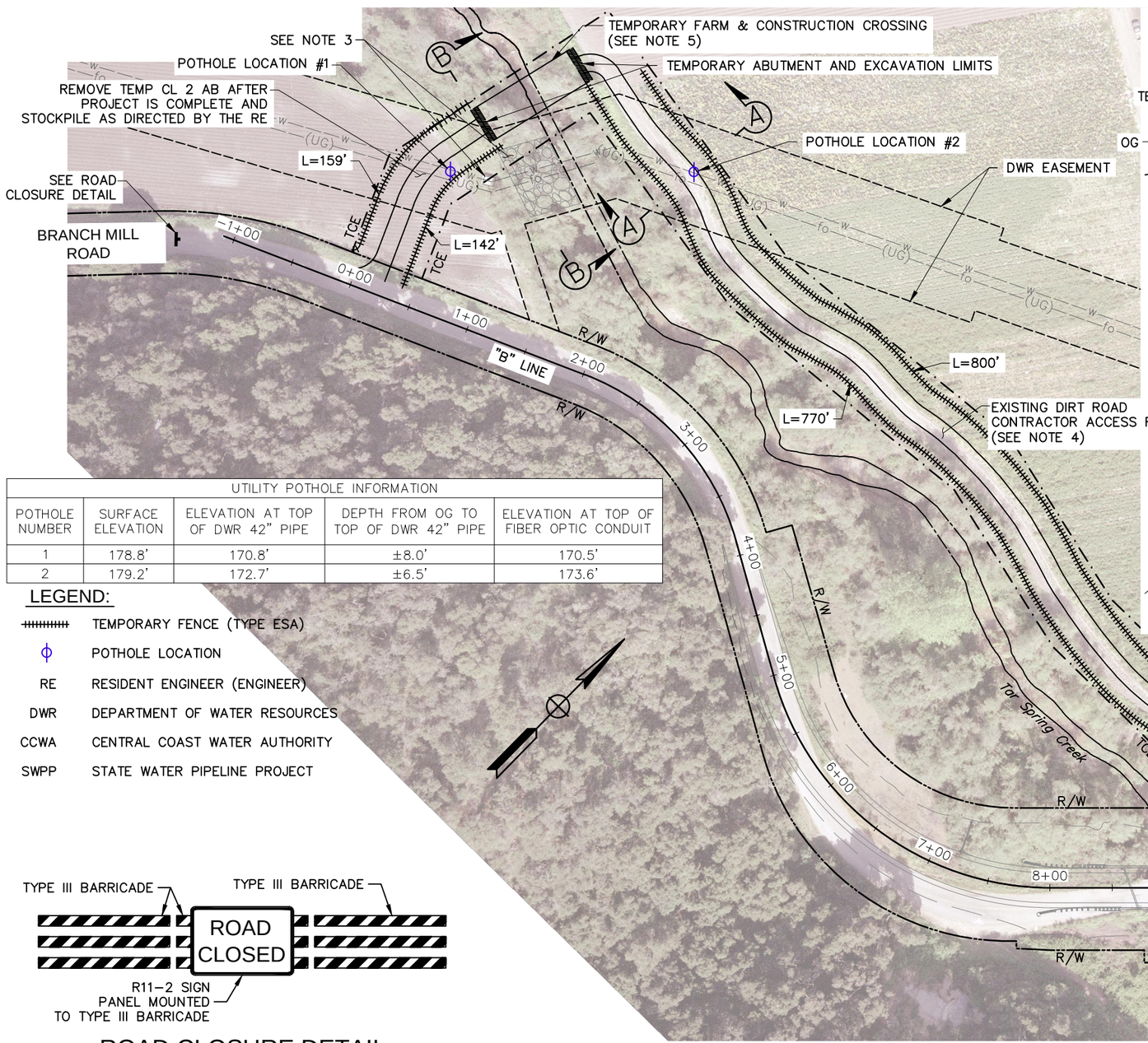

UTILITY POTHOLE INFORMATION				
POTHOLE NUMBER	SURFACE ELEVATION	ELEVATION AT TOP OF DWR 42" PIPE	DEPTH FROM OG TO TOP OF DWR 42" PIPE	ELEVATION AT TOP OF FIBER OPTIC CONDUIT
1	178.8'	170.8'	±8.0'	170.5'
2	179.2'	172.7'	±6.5'	173.6'

LEGEND:

- TEMPORARY FENCE (TYPE ESA)
- POTHOLE LOCATION
- RE — RESIDENT ENGINEER (ENGINEER)
- DWR — DEPARTMENT OF WATER RESOURCES
- CCWA — CENTRAL COAST WATER AUTHORITY
- SWPP — STATE WATER PIPELINE PROJECT

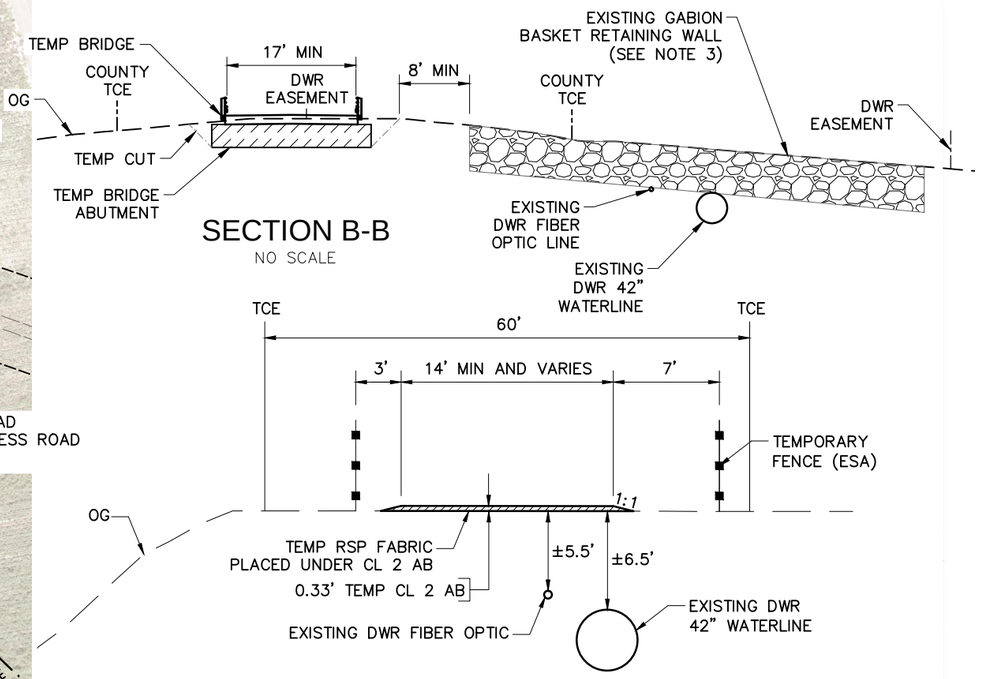

SECTION B-B
NO SCALE

SECTION A-A
NO SCALE

ROAD CLOSURE DETAIL

FOR REDUCED PLANS ORIGINAL SCALE IS IN INCHES 0 1 2 3

		DATE
DESIGN	R. GARCIA	
DRAWN	R. GARCIA	
SCALE: 1"=50'		
CONTRACT # 300385		

SAN LUIS OBISPO COUNTY
DEPARTMENT OF PUBLIC WORKS
1050 Monterey Street
San Luis Obispo, CA 93408
Phone: (805) 781–5252 FAX: (805) 781–1229

QUINCY ENGINEERING

TAR SPRING CREEK BRIDGE ON BRANCH MILL ROAD
CONSTRUCTION DETAILS – CONSTRUCTION ACCESS ROAD

SHEET No. C-2

S:\Client\SLO-County\S13-910 Branch Mill Rd\CAD_Civil 3D 2012\S13910rga002.dwg 12/17/2014 12:36 PM

DIST.	COUNTY	PROJECT	SHEET No.	TOTAL SHEETS
5	SLO	TAR SPRING CREEK BRIDGE ON BRANCH MILL ROAD	8	30

QUINCY ENGINEERING, INC.
11017 COBBLEROCK DRIVE
SUITE 100
RANCHO CORDOVA, CA 95670

SURVEYOR'S STATEMENT

This map correctly represents a survey made by me or under my direction in conformance with the requirements of the Land Surveyor's Act at the request of COUNTY OF SAN LUIS OBISPO on JUNE 17, 2011.

12-31-14
DATE

PROFESSIONAL LAND SURVEYOR
KEITH McMILLAN
No. 6729
STATE OF CALIFORNIA

NOTES:

1. THIS PLAN IS FOR INFORMATION PURPOSES ONLY.

LEGEND:

- TEMPORARY CONSTRUCTION EASEMENT (TCE)
- SURVEY CONTROL POINT
- RIGHT OF WAY SURVEY MONUMENT (PER SLO COUNTY DETAIL M-1)
- APN — ASSESSOR'S PARCEL NUMBER
- X — ROW POINT NUMBER
- X — TCE POINT NUMBER
- X — SURVEY MONUMENT POINT NUMBER
- X — CURVE DATA NUMBER

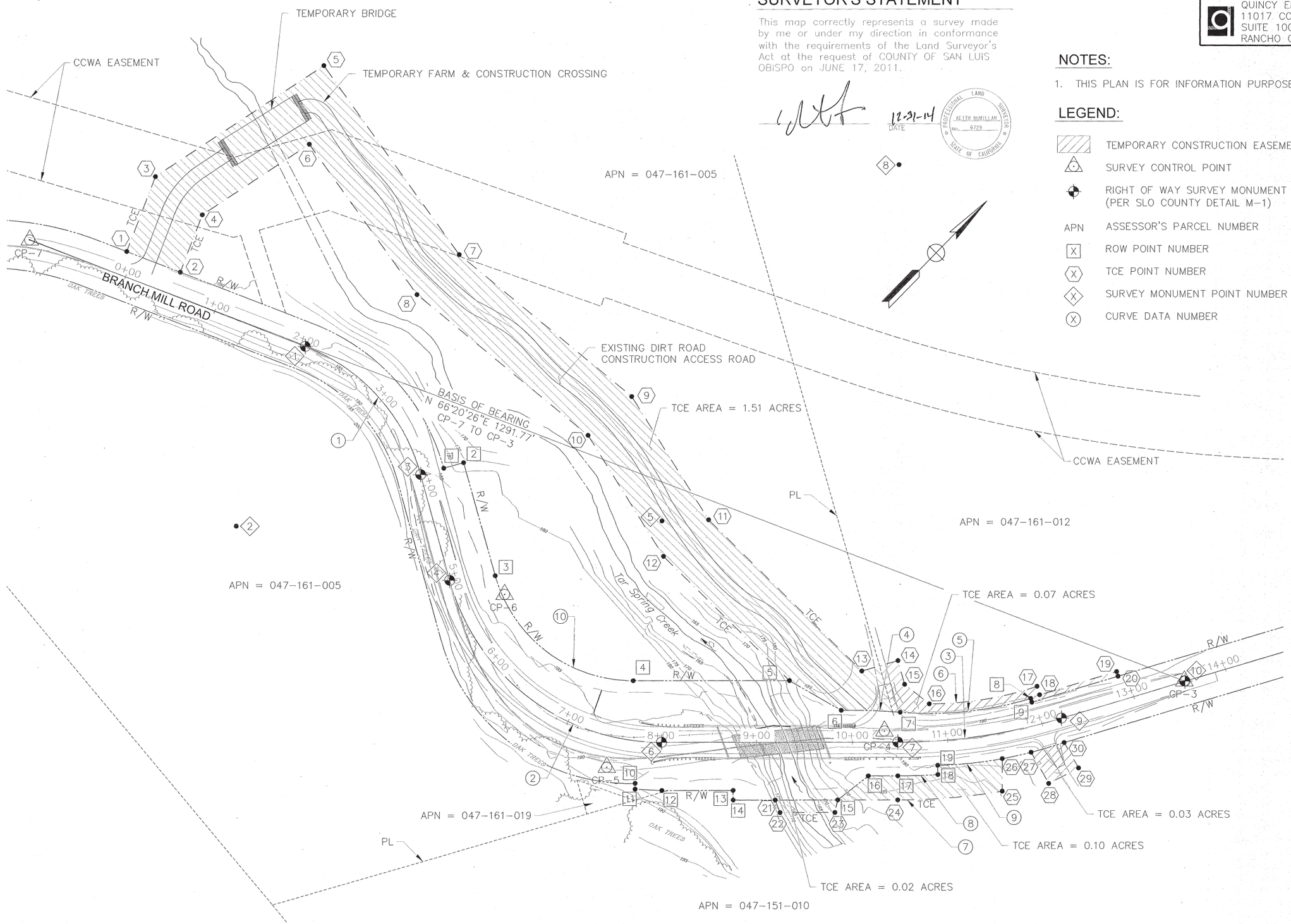

FOR REDUCED PLANS ORIGINAL SCALE IS IN INCHES 0 1 2 3

		DATE
DESIGN	R. GARCIA	
DRAWN	R. GARCIA	
SCALE: 1"=50'		

SAN LUIS OBISPO COUNTY
DEPARTMENT OF PUBLIC WORKS
1050 Monterey Street
San Luis Obispo, CA 93408
Phone: (805) 781-5252 FAX: (805) 781-1229

QUINCY ENGINEERING

TAR SPRING CREEK BRIDGE ON BRANCH MILL ROAD
CONSTRUCTION DETAILS
RIGHT OF WAY MAP

SHEET No.
C-3

S:\Client\SLO-County\S13-910 Branch Mill Rd\CAD_Civil 3D 2012\S13910rga003.dwg 12/17/2014 12:39 PM

DIST	COUNTY	PROJECT	SHEET No.	TOTAL SHEETS
5	SLO	TAR SPRING CREEK BRIDGE ON BRANCH MILL ROAD	9	30

QUINCY ENGINEERING, INC.
11017 COBBLEROCK DRIVE
SUITE 100
RANCHO CORDOVA, CA 95670

SURVEY MONUMENT POINTS

NO.	LINE	STATION	OFFSET	NORTHING	EASTING	DESCRIPTION
1	"B"	2+01.41	0.00	12763834.4412	2374306.0268	BC
2	"B"		200.00' Rt	12763650.9264	2374385.5398	RP – NO MONUMENT
3	"B"	3+87.95	0.00	12763824.1111	2374485.5751	EC/CONFORM
4	"B"	5+01.99	0.00	12763767.0664	2374584.3329	BC
5	"B"		230.00' Lt	12763966.2288	2374699.3735	RP – NO MONUMENT
6	"B"	8+00.79	0.00	12763801.9591	2374860.3563	EC
7	"B"	10+47.71	0.00	12763974.7889	2375036.7148	BC
8	"B"		600.00 Rt	12764403.3185	2374616.7595	RP – NO MONUMENT
9	"B"	12+21.15	0.00	12764112.2809	2375141.4472	EC
10	"B"	13+56.00	0.00	12764230.2016	2375206.8563	CONFORM

TCE POINTS

NO.	LINE	STATION	OFFSET	NORTHING	EASTING
1	B	−0+08.24	−25.00	12763774.0318	2374103.7202
2	B	0+51.76	−25.00	12763797.8857	2374158.7746
3	B	−0+08.24	−108.26	12763850.4279	2374070.6194
4	B	0+51.76	−88.92	12763856.5389	2374133.3614
5	B	1+14.56	−278.98	12764055.9010	2374115.4199
6	B	1+29.81	−197.43	12763987.1255	2374161.8340
7	B	2+65.92	−165.67	12764015.2376	2374354.0137
8	B	2+60.96	−105.74	12763954.7779	2374351.6347
9	B	3+79.19	−234.39	12764036.2209	2374586.1364
10	B	3+95.47	−179.27	12763975.5802	2374581.7544
11	B	8+49.40	−231.16	12764001.0817	2374733.2771
12	B	8+02.35	−193.25	12763941.0817	2374726.2120
13	B	10+09.85	−73.92	12764001.0817	2374957.9392
14	B	10+47.61	−84.81	12764035.2873	2374977.2854
15	B	10+55.52	−60.03	12764022.6187	2374999.6844
16	B	10+82.79	−38.92	12764026.2192	2375032.2138
17	B	12+05.07	−38.76	12764118.0291	2375100.0778
18	B	12+05.34	−29.63	12764113.6042	2375108.0737
19	B	12+90.15	−29.91	12764187.1243	2375148.7596
20	B	12+90.15	−24.91	12764184.7033	2375153.1344
21	B	9+19.52	60.02	12763842.1951	2374987.1706
22	B	9+24.58	73.01	12763836.4621	2374999.8688
23	B	9+81.97	72.99	12763876.6391	2375040.8464
24	B	10+47.71	60.00	12763931.9359	2375078.7103
25	B	11+47.47	60.00	12764014.8904	2375150.3546
26	B	11+52.82	26.77	12764038.9769	2375126.7501
27	B	11+82.31	26.23	12764064.7715	2375143.5855
28	B	11+92.15	61.99	12764054.6124	2375179.4684
29	B	12+23.59	54.72	12764087.8704	2375190.4805
30	B	12+16.84	25.18	12764096.1405	2375161.2695

CURVE DATA

NO.	R	Δ	T	L
1	200.00'	53°26'16"	100.67'	186.53'
2	230.00'	74°25'58"	174.68'	298.79'
3	600.00'	16°33'45"	87.33'	173.44'
4	425.00'	08°97'80"	33.37'	66.60'
5	629.00'	05°37'27"	30.90'	61.74'
6	361.00'	18°11'48"	57.81'	114.65'
7	660.00'	09°31'35"	54.99'	109.74'
8	635.00'	03°46'55"	20.96'	41.91'
9	425.00'	15°24'39"	57.50'	114.31'
10	150.00'	74°09'21"	113.35'	194.14'

ROW POINTS

NO.	LINE	STATION	OFFSET	NORTHING	EASTING
1	B	3+88.00	−25.00	12763845.7317	2374498.1270
2	B	3+88.00	−46.52	12763864.3643	2374508.8896
3	B	5+12.26	−46.93	12763803.7717	2374614.9696
4	B	7+60.08	−61.37	12763826.8887	2374794.3566
5	B	9+34.25	−64.00	12763941.0817	2374910.8810
6	B	9+88.42	−33.15	12763956.9621	2374971.1651
7	B	10+50.23	−31.12	12763998.6893	2375016.6342
8	B	11+94.88	−28.27	12764104.3704	2375104.1066
9	B	11+95.06	−24.27	12764102.4336	2375107.6064
10	B	7+77.65	44.09	12763752.1891	2374870.5900
11	B	7+78.14	50.03	12763747.9258	2374874.7680
12	B	8+01.47	50.06	12763766.6797	2374895.8841
13	B	8+75.63	50.03	12763818.6084	2374948.8302
14	B	8+75.63	60.03	12763811.4679	2374955.8312
15	B	9+84.90	60.00	12763887.9690	2375033.8457
16	B	10+16.86	35.01	12763928.1914	2375039.1823
17	B	10+47.71	35.00	12763949.7913	2375061.2122
18	B	10+87.32	35.00	12763980.0948	2375090.1587
19	B	10+87.73	25.41	12763986.8056	2375083.2989

DESIGN	R. GARCIA	DATE
DRAWN	R. GARCIA	
SCALE: 1"=50'		

SAN LUIS OBISPO COUNTY
DEPARTMENT OF PUBLIC WORKS
1050 Monterey Street
San Luis Obispo, CA 93408
Phone: (805) 781-5252 FAX: (805) 781-1229

QUINCY ENGINEERING

TAR SPRING CREEK BRIDGE ON BRANCH MILL ROAD
CONSTRUCTION DETAILS
RIGHT OF WAY MAP

SHEET No.
C-4

FOR REDUCED PLANS ORIGINAL SCALE IS IN INCHES 0 1 2 3

S:\Client\SLO-County\S13-910 Branch Mill Rd\CAD_Civil 3D 2012\S13910rga004.dwg 12/17/2014 12:41 PM

CURVE DATA				
No.	R	Δ	T	L
1	30.00'	77°06'41"	23.91'	40.38'
2	30.00'	86°51'59"	28.40'	45.48'
3	10.00'	70°01'20"	7.00'	12.22'
4	10.00'	73°54'24"	7.52'	12.90'

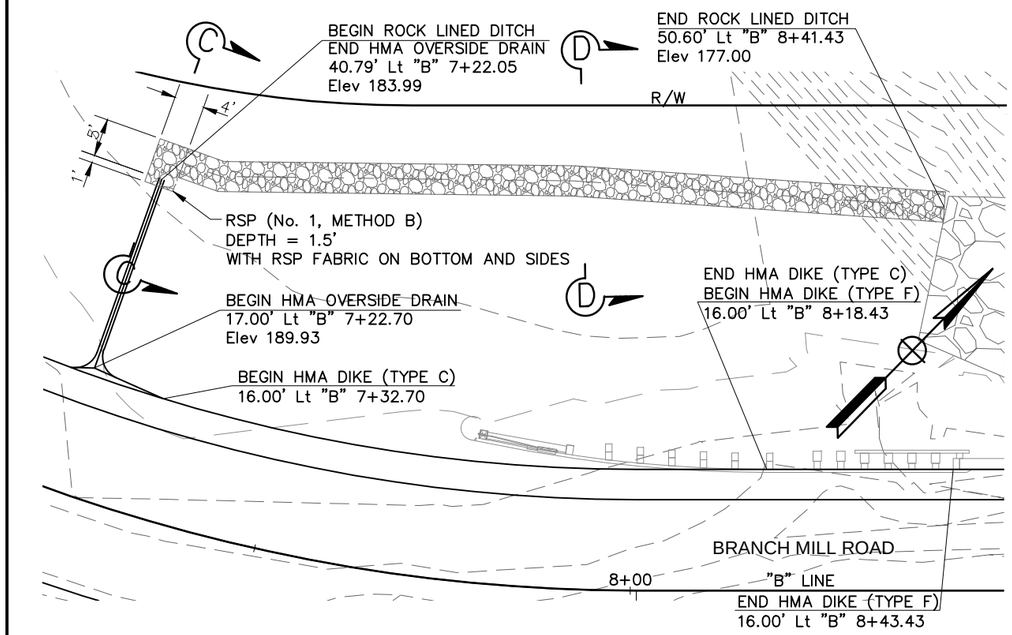

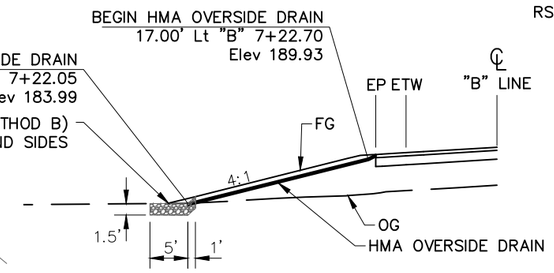

SECTION C-C
NO SCALE

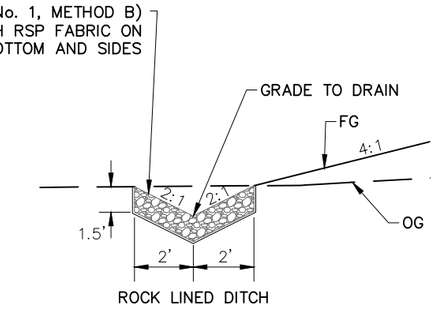

SECTION D-D
NO SCALE

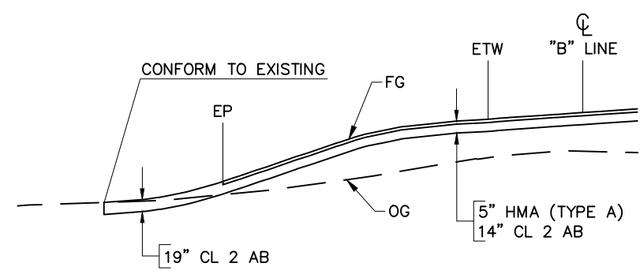

SECTION A-A
NO SCALE

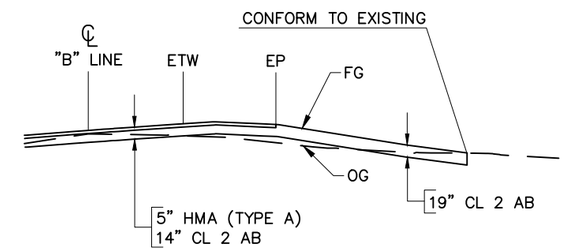

SECTION B-B
NO SCALE

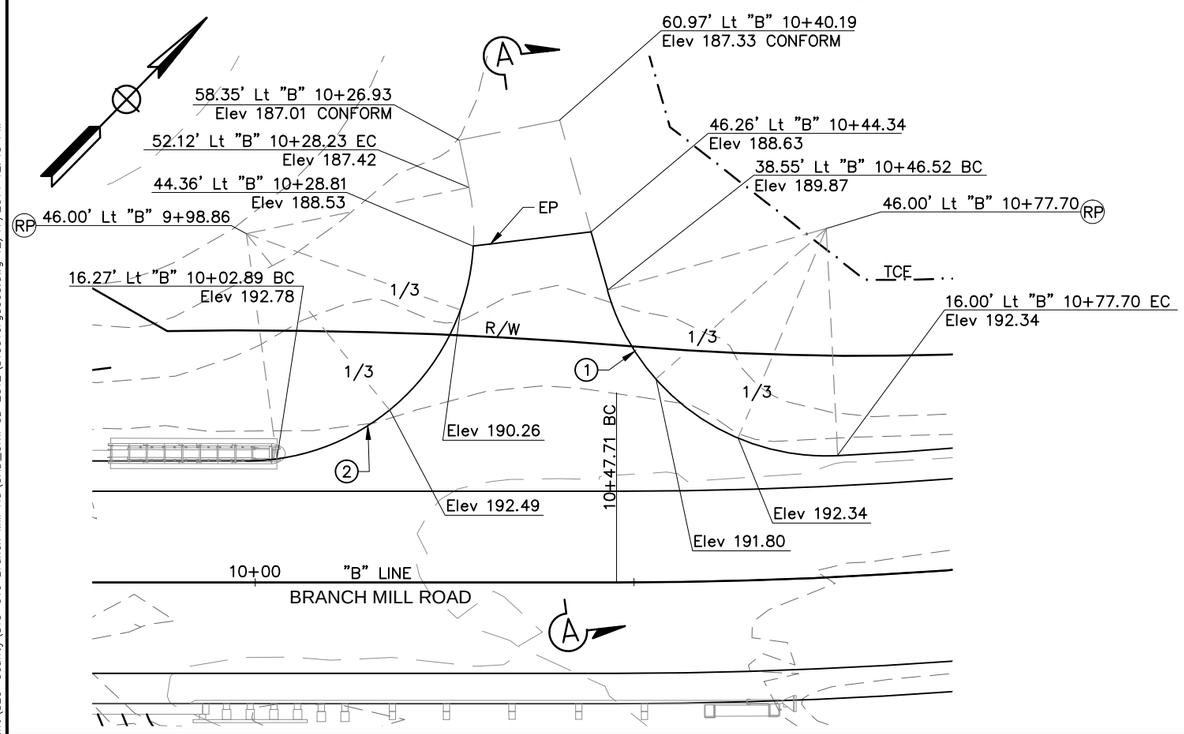

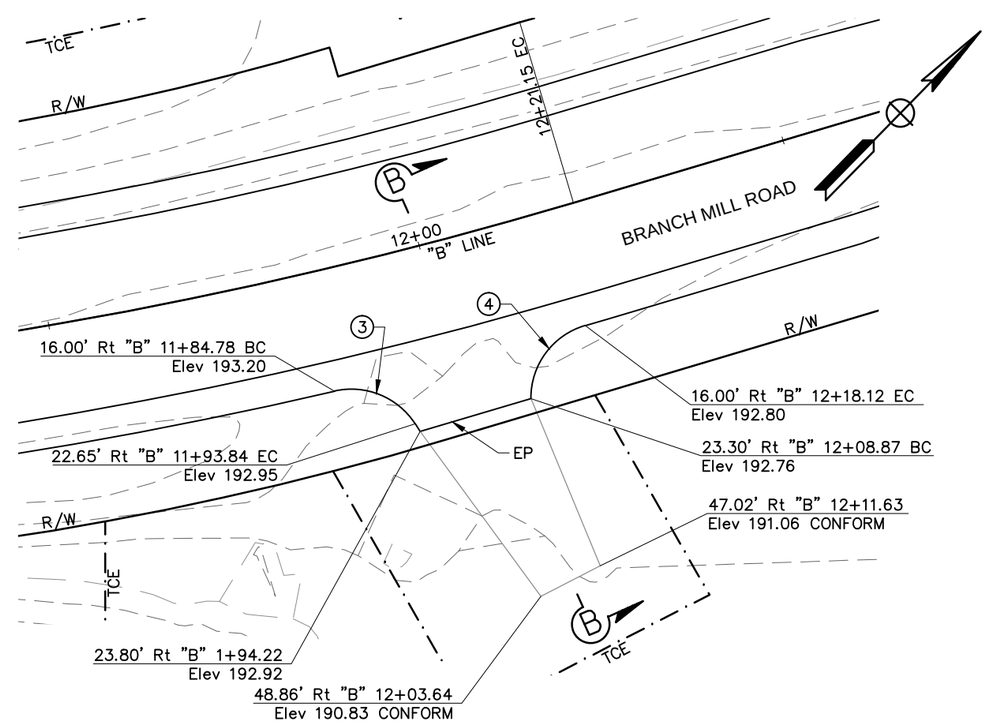

DIST	COUNTY	PROJECT	SHEET No.	TOTAL SHEETS
5	SLO	TAR SPRING CREEK BRIDGE ON BRANCH MILL ROAD OVER	10	30

Garrett McLaughlin 12/19/14
REGISTERED CIVIL ENGINEER DATE

REGISTERED PROFESSIONAL ENGINEER Garrett McLaughlin No. 67687 CIVIL STATE OF CALIFORNIA

The County of San Luis Obispo or its officers or agents shall not be responsible for the accuracy or completeness of electronic copies of this plan sheet.

QUINCY ENGINEERING, INC.
11017 COBBLEROCK DRIVE
SUITE 100
RANCHO CORDOVA, CA 95670

	BY	DATE
DESIGN	R. GARCIA	
DRAWN	R. GARCIA	
SCALE: 1"=10'		
CONTRACT # 300385		

SAN LUIS OBISPO COUNTY
DEPARTMENT OF PUBLIC WORKS
1050 Monterey Street
San Luis Obispo, CA 93408
Phone: (805) 781-5252 FAX: (805) 781-1229

QUINCY ENGINEERING

TAR SPRING CREEK BRIDGE ON BRANCH MILL ROAD
CONSTRUCTION DETAILS
DRIVEWAYS

SHEET No.
C-5

FOR REDUCED PLANS ORIGINAL SCALE IS IN INCHES 0 1 2 3

S:\Client\SLO-County\S13-910 Branch Mill Rd\CAD_Civil 3D 2012\S13910rga005.dwg 12/17/2014 12:43 PM

DIST	COUNTY	PROJECT	SHEET No.	TOTAL SHEETS
5	SLO	TAR SPRING CREEK BRIDGE ON BRANCH MILL ROAD OVER	11	30

REGISTERED CIVIL ENGINEER — DATE 12/19/14

REGISTERED PROFESSIONAL ENGINEER — Garrett McLaughlin No. 67687 CIVIL — STATE OF CALIFORNIA

The County of San Luis Obispo or its officers or agents shall not be responsible for the accuracy or completeness of electronic copies of this plan sheet.

QUINCY ENGINEERING, INC.
11017 COBBLEROCK DRIVE
SUITE 100
RANCHO CORDOVA, CA 95670

NOTES:

1. THIS PLAN ACCURATE ESA FENCE PLACEMENT ONLY.
2. (N) – NOT A SEPARATE PAY ITEM, FOR INFORMATION ONLY.
3. TREES TO BE IMPACTED SHALL BE TRIMMED UNDER THE DIRECTION OF THE RESIDENT ENGINEER.
4. ADDITIONAL TREE REMOVAL AND TREE TRIMMING MY BE REQUIRED FOR PROJECT CONSTRUCTION AND SHALL BE INCLUDED AS CLEARING AND GRUBBING.

PROJECTED TREES TO BE IMPACTED – (N)

No.	TYPE	STATION	OFFSET	COMMENTS
1	7" COASTAL LIVE OAK	"B" 11+37	19.8 Rt	TREE TO BE REMOVED
2	13" ARROYO WILLOW	"B" 10+81	24.3 Rt	TEMPORARY IMPACTS (SEE NOTE 3)
3	14" ARROYO WILLOW	"B" 10+60	31.3 Rt	TEMPORARY IMPACTS (SEE NOTE 3)
4	MT ARROYO WILLOW	"B" 10+27	39.4 Rt	TEMPORARY IMPACTS (SEE NOTE 3)
5	16" ARROYO WILLOW	"B" 9+93	29.2 Rt	TREE TO BE REMOVED
6	15" ARROYO WILLOW	"B" 9+69	21.0 Rt	TREE TO BE REMOVED
7	MT ARROYO WILLOW	"B" 9+49	35.7 Lt	TREE TO BE REMOVED
8	MT ARROYO WILLOW	"B" 9+29	15.8 Rt	TREE TO BE REMOVED
9	MT ARROYO WILLOW	"B" 8+84	22.3 Rt	TREE TO BE REMOVED
10	MT ARROYO WILLOW	"B" 8+79	12.3 Lt	TREE TO BE REMOVED
11	MT ARROYO WILLOW	"B" 8+32	5.20 Lt	TREE TO BE REMOVED
12	MT ARROYO WILLOW	"B" 7+63	4.3 Rt	TREE TO BE REMOVED
13	MT ARROYO WILLOW	"B" 9+43	57.8 Lt	TREE TO BE REMOVED
14	10" ARROYO WILLOW	"B" 9+27	76.4 Lt	NO ANTICIPATED IMPACTS
15	MT ARROYO WILLOW	"B" 0+93	117.8 Lt	NO ANTICIPATED IMPACTS
16	MT ARROYO WILLOW	"B" 0+91	133.0 Lt	NO ANTICIPATED IMPACTS
17	MT ARROYO WILLOW	"B" 0+73	140.7 Lt	TREE TO BE REMOVED
18	MT ARROYO WILLOW	"B" 0+42	148.9 Lt	TREE TO BE REMOVED

LEGEND:

- TEMPORARY FENCE (TYPE ESA)
- MT — MULTI TRUNK
- TREE SYMBOL

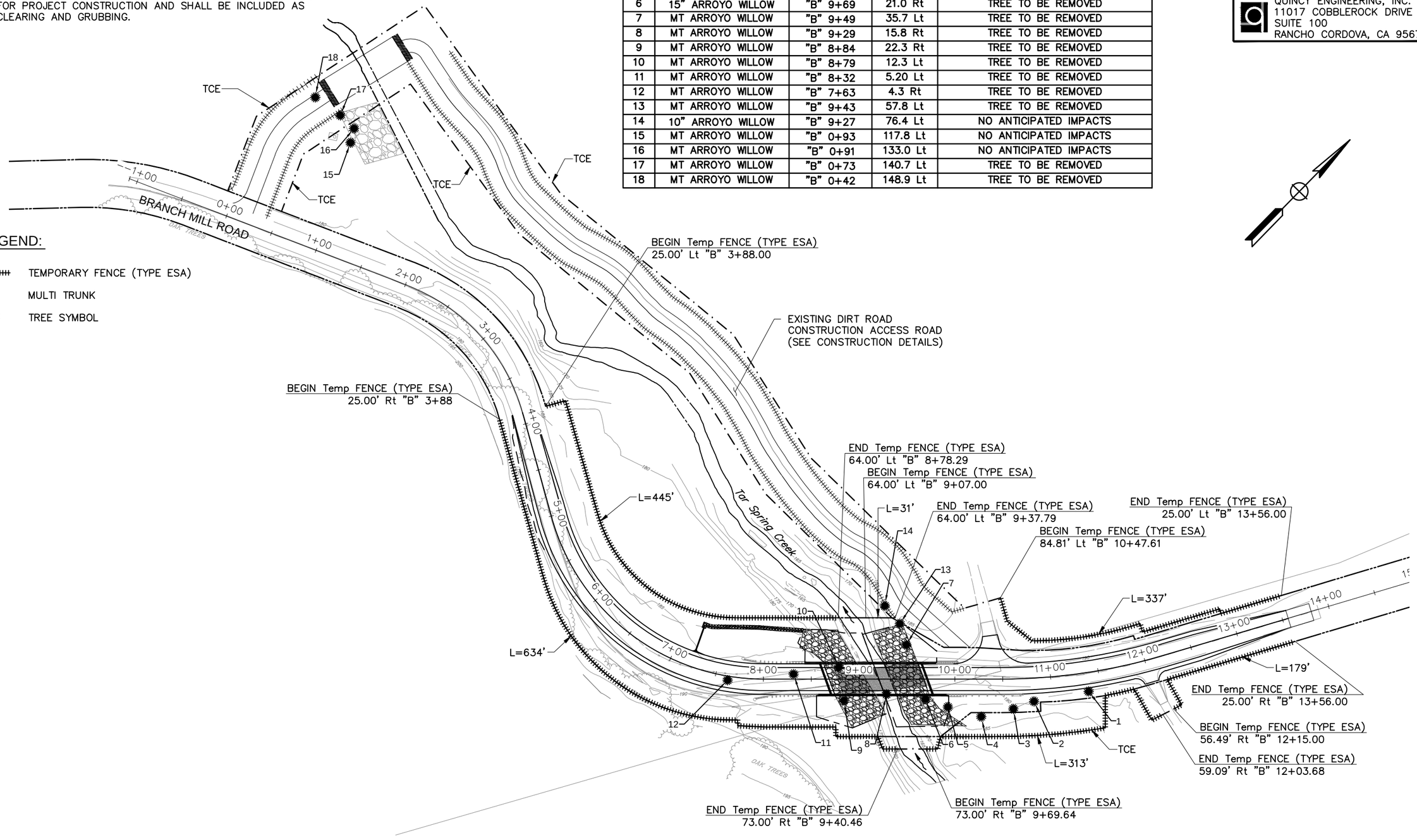

	BY	DATE
DESIGN	R. GARCIA	
DRAWN	R. GARCIA	
SCALE: 1"=50'		
CONTRACT # 300385		

SAN LUIS OBISPO COUNTY
DEPARTMENT OF PUBLIC WORKS
1050 Monterey Street
San Luis Obispo, CA 93408
Phone: (805) 781-5252 FAX: (805) 781-1229

QUINCY ENGINEERING

TAR SPRING CREEK BRIDGE ON BRANCH MILL ROAD
ESA FENCE LAYOUT PLAN

SHEET No. EC-1

FOR REDUCED PLANS ORIGINAL SCALE IS IN INCHES 0 1 2 3

S:\Client\SLO-County\S13-910 Branch Mill Rd\CAD_Civil 3D 2012\S13910rge001.dwg 12/30/2014 1:19 PM

DIST	COUNTY	PROJECT	SHEET No.	TOTAL SHEETS
5	SLO	TAR SPRING CREEK BRIDGE ON BRANCH MILL ROAD OVER	12	30

REGISTERED CIVIL ENGINEER — 12/19/14 DATE

REGISTERED PROFESSIONAL ENGINEER — Garrett McLaughlin No. 67687 CIVIL — STATE OF CALIFORNIA

The County of San Luis Obispo or its officers or agents shall not be responsible for the accuracy or completeness of electronic copies of this plan sheet.

QUINCY ENGINEERING, INC.
11017 COBBLEROCK DRIVE
SUITE 100
RANCHO CORDOVA, CA 95670

NOTES:

1. THIS PLAN ACCURATE FOR EROSION CONTROL WORK ONLY.
2. HYDROSEED TO BE APPLIED AS DIRECTED BY THE ENGINEER AND SHALL NOT TO BE PLACED WITHIN CULTIVATED LANDS OR BELOW THE OHW.

LEGEND:

- EROSION CONTROL CASE 1 (SLOPES STEEPER THAN 4:1)
- EROSION CONTROL CASE 2 (SLOPES 4:1 OR FLATTER)
- ROCK SLOPE PROTECTION

HYDROSEED SEED MIX	
BOTANICAL NAME (COMMON NAME)	POUNDS PURE LIVE SEED PER ACRE (SLOPE MEASUREMENT)
BROMUS CARINATUS (CUCAMONGA BROME)	20
TRIFOLIUM TRIDENTATUM (TOMCAT CLOVER)	4
VULPIA MICROSTACHYS (SMALL FESCUE)	8
TOTAL	32

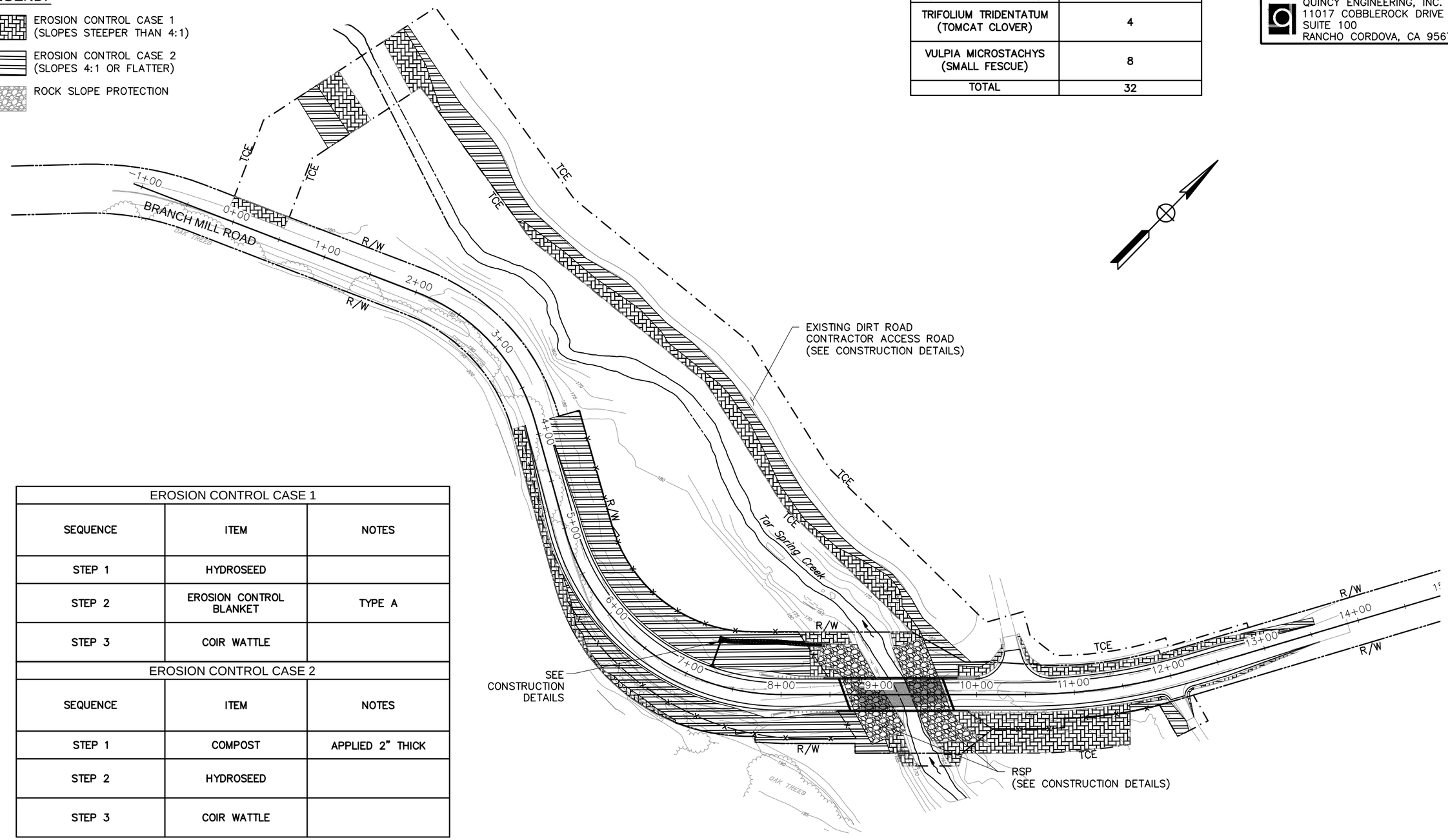

EROSION CONTROL CASE 1		
SEQUENCE	ITEM	NOTES
STEP 1	HYDROSEED	
STEP 2	EROSION CONTROL BLANKET	TYPE A
STEP 3	COIR WATTLE	

EROSION CONTROL CASE 2		
SEQUENCE	ITEM	NOTES
STEP 1	COMPOST	APPLIED 2" THICK
STEP 2	HYDROSEED	
STEP 3	COIR WATTLE	

FOR REDUCED PLANS ORIGINAL SCALE IS IN INCHES 0 1 2 3

	BY	DATE
DESIGN	R. GARCIA	
DRAWN	R. GARCIA	
SCALE: 1"=50'		
CONTRACT # 300385		

SAN LUIS OBISPO COUNTY
DEPARTMENT OF PUBLIC WORKS
1050 Monterey Street
San Luis Obispo, CA 93408
Phone: (805) 781-5252 FAX: (805) 781-1229

QUINCY ENGINEERING

TAR SPRING CREEK BRIDGE ON BRANCH MILL ROAD
PERMANENT EROSION CONTROL PLAN

SHEET No.
EC-2

S:\Client\SLO-County\S13-910 Branch Mill Rd\CAD_Civil 3D 2012\S13910rge002.dwg 12/17/2014 12:46 PM

DIST	COUNTY	PROJECT	SHEET No.	TOTAL SHEETS
5	SLO	TAR SPRING CREEK BRIDGE ON BRANCH MILL ROAD OVER	13	30

REGISTERED CIVIL ENGINEER — DATE 12/19/14

REGISTERED PROFESSIONAL ENGINEER — Garrett McLaughlin No. 67687 CIVIL — STATE OF CALIFORNIA

The County of San Luis Obispo or its officers or agents shall not be responsible for the accuracy or completeness of electronic copies of this plan sheet.

QUINCY ENGINEERING, INC.
11017 COBBLEROCK DRIVE
SUITE 100
RANCHO CORDOVA, CA 95670

NOTES:

1. LOCATION OF CONSTRUCTION AREA SIGNS ARE APPROXIMATE. EXACT LOCATIONS WILL BE DETERMINED BY THE ENGINEER.
2. THIS PLAN ACCURATE FOR CONSTRUCTION AREA SIGN WORK ONLY.

LEGEND:

DETOUR ROUTE

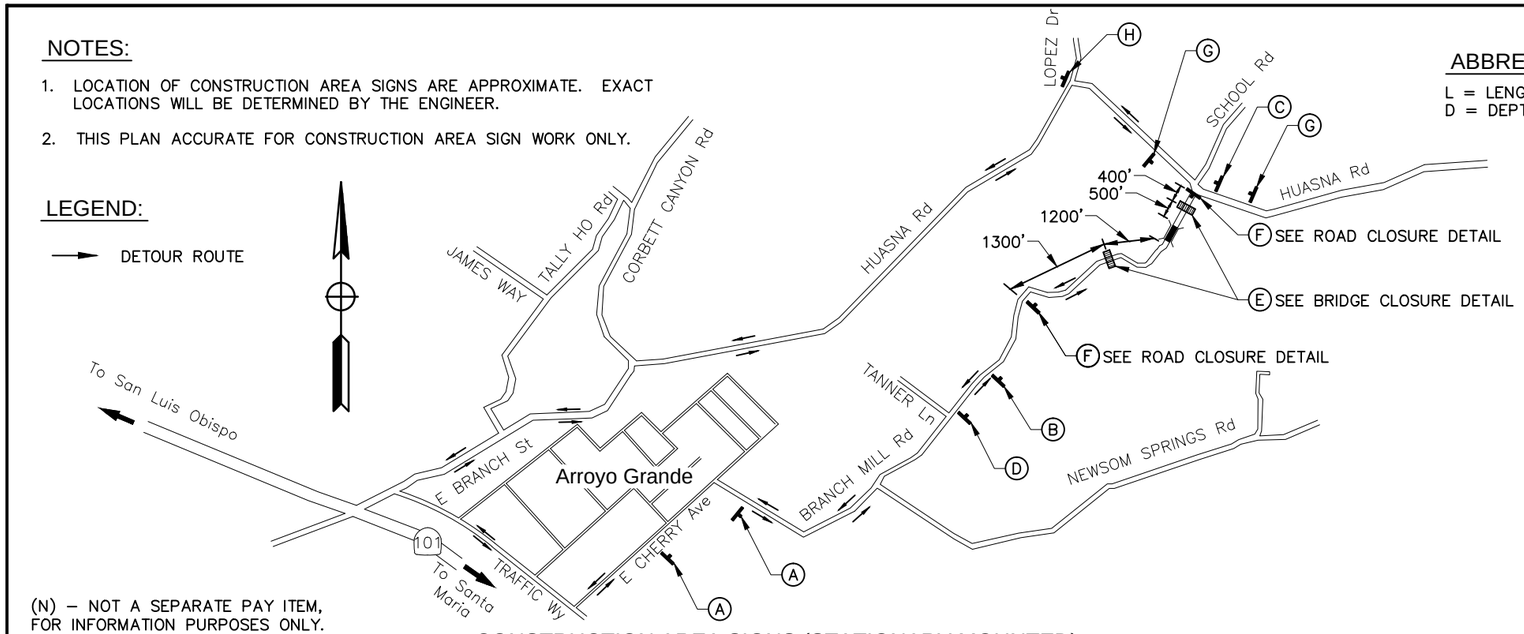

(N) – NOT A SEPARATE PAY ITEM, FOR INFORMATION PURPOSES ONLY.

ABBREVIATIONS:

L = LENGTH OF SIGN
D = DEPTH OF SIGN

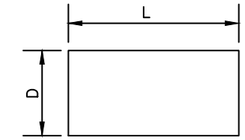

CONSTRUCTION AREA SIGNS (STATIONARY MOUNTED)

SIGN NO.	SIGN CODE FEDERAL	SIGN CODE CALIFORNIA	SIGN MESSAGE	NUMBER OF POST AND SIZE (N)	BARRICADE MOUNTED SIGN (N)	TYPE III BARRICADE	PANEL SIZE (N)	NUMBER OF SIGNS (N)
					EA	EA	IN X IN	EA
A		SIGN A	BRANCH MILL ROAD CLOSED AHEAD	2 – 4" X 6"			48 X 36	2
B		SIGN B	BRANCH MILL ROAD CLOSED 500 FT	2 – 4" X 6"			48 X 36	1
C		SC9 (CA)	"UP ARROW" DETOUR	1 – 4" X 4"			36 X 12	1
D		C19 (CA)	ROAD CLOSED AHEAD	1 – 4" X 6"			36 X 36	1
E	R11–2B		BRIDGE CLOSED		2	6	36 X 24	2
F	R11–2		ROAD CLOSED		2	6	36 X 24	2
G		SIGN C	BRANCH MILL ROAD CLOSED	2 – 4" X 6"			48 X 36	2
H	M4–10		"LEFT ARROW" DETOUR	1 – 4" X 4"			36 X 12	1
SHEET TOTAL						12		12

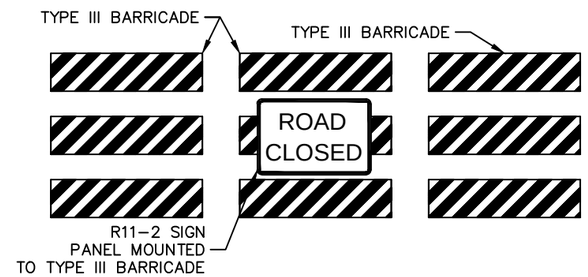

ROAD CLOSURE DETAIL

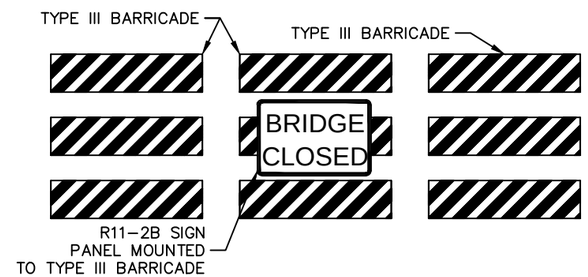

BRIDGE CLOSURE DETAIL

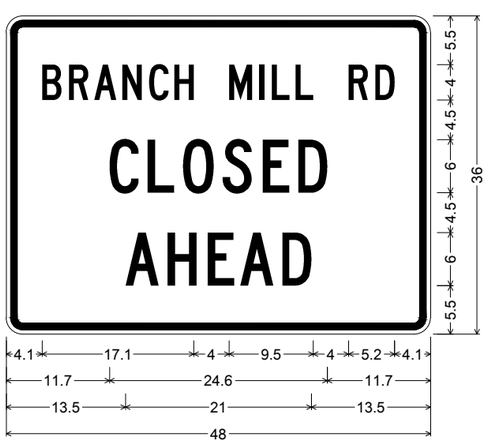

1.9" Radius, 0.8" Border, 0.5" Indent, Black on White;
[BRANCH MILL RD] C; [CLOSED] C; [AHEAD] C;

SIGN A DETAIL

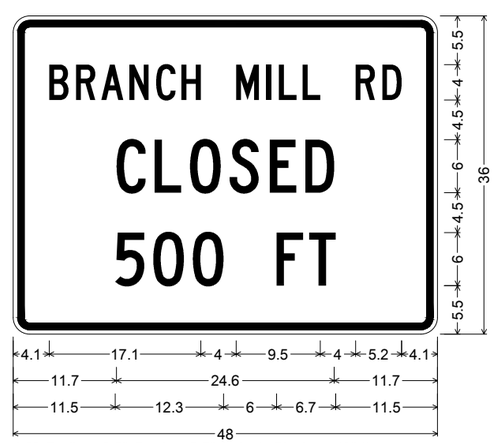

1.9" Radius, 0.8" Border, 0.5" Indent, Black on White;
[BRANCH MILL RD] C; [CLOSED] C; [500 FT] C;

SIGN B DETAIL

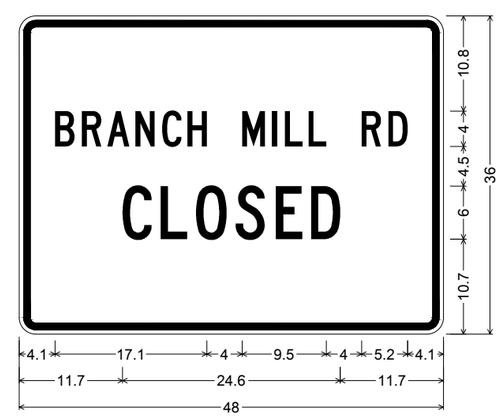

1.9" Radius, 0.8" Border, 0.5" Indent, Black on White;
[BRANCH MILL RD] C; [CLOSED] C;

SIGN C DETAIL

FOR REDUCED PLANS ORIGINAL SCALE IS IN INCHES 0 1 2 3

DESIGN	R. GARCIA	DATE
DRAWN	R. GARCIA	
SCALE: NO SCALE		
CONTRACT # 300385		

SAN LUIS OBISPO COUNTY
DEPARTMENT OF PUBLIC WORKS
1050 Monterey Street
San Luis Obispo, CA 93408
Phone: (805) 781-5252 FAX: (805) 781-1229

QUINCY ENGINEERING

TAR SPRING CREEK BRIDGE ON BRANCH MILL ROAD
CONSTRUCTION AREA SIGNS

SHEET No. CS-1

S:\Client\SLO-County\S13-910 Branch Mill Rd\CAD_Civil 3D 2012\S13910rla001.dwg 12/17/2014 12:48 PM

DIST	COUNTY	PROJECT	SHEET No.	TOTAL SHEETS
5	SLO	TAR SPRING CREEK BRIDGE ON BRANCH MILL ROAD OVER	14	30

REGISTERED CIVIL ENGINEER — DATE 12/19/14

REGISTERED PROFESSIONAL ENGINEER — Garrett McLaughlin No. 67687 CIVIL — STATE OF CALIFORNIA

The County of San Luis Obispo or its officers or agents shall not be responsible for the accuracy or completeness of electronic copies of this plan sheet.

QUINCY ENGINEERING, INC.
11017 COBBLEROCK DRIVE
SUITE 100
RANCHO CORDOVA, CA 95670

NOTES:

1. THIS PLAN ACCURATE FOR PAVEMENT DELINEATION AND SIGN WORK ONLY.

LEGEND:

- (XX) PAVEMENT DELINEATION DETAIL
- OBJECT MARKER (TYPE L-1)
- OBJECT MARKER (TYPE P)
- RELOCATE ROADSIDE SIGN
- ROADSIDE SIGN (ONE POST)
- EXISTING ROADSIDE SIGN

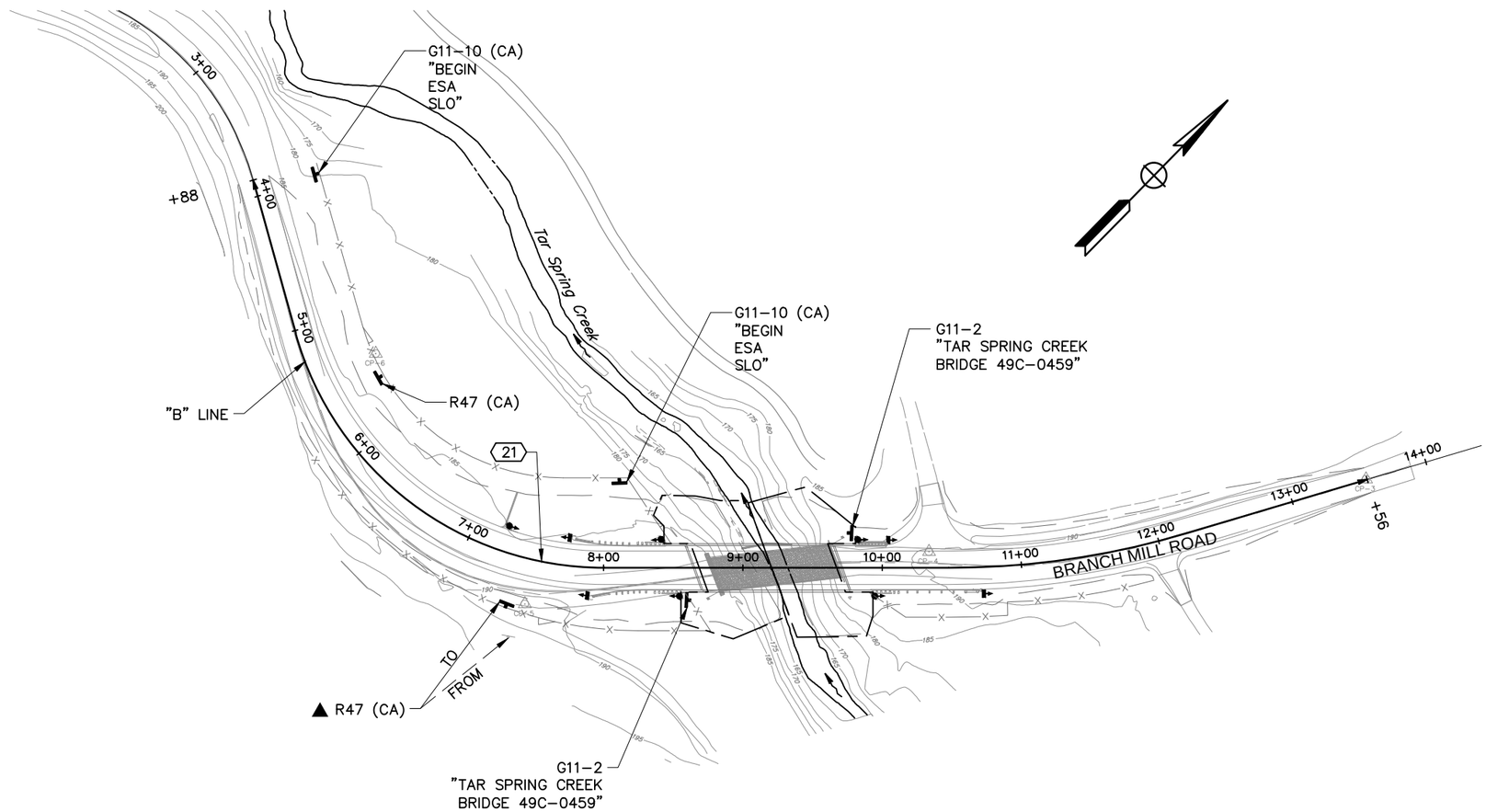

	BY	DATE
DESIGN	R. GARCIA	
DRAWN	R. GARCIA	
SCALE: 1"=50'		
CONTRACT # 300385		

SAN LUIS OBISPO COUNTY
DEPARTMENT OF PUBLIC WORKS
1050 Monterey Street
San Luis Obispo, CA 93408
Phone: (805) 781-5252 FAX: (805) 781-1229

QUINCY ENGINEERING

TAR SPRING CREEK BRIDGE ON BRANCH MILL ROAD
PAVEMENT DELINEATION AND SIGN PLAN
STA. 3+87.95 TO STA. 13+56.00

SHEET No. PD-1

FOR REDUCED PLANS ORIGINAL SCALE IS IN INCHES 0 1 2 3

S:\Client\SLO-County\S13-910 Branch Mill Rd\CAD_Civil 3D 2012\S13910ma001.dwg 1/6/2015 9:52 PM

DIST	COUNTY	PROJECT	SHEET No.	TOTAL SHEETS
5	SLO	TAR SPRING CREEK BRIDGE ON BRANCH MILL ROAD OVER	15	30

Garrett McLaughlin 12/19/14
REGISTERED CIVIL ENGINEER DATE

REGISTERED PROFESSIONAL ENGINEER Garrett McLaughlin No. 67687 CIVIL STATE OF CALIFORNIA

The County of San Luis Obispo or its officers or agents shall not be responsible for the accuracy or completeness of electronic copies of this plan sheet.

QUINCY ENGINEERING, INC.
11017 COBBLEROCK DRIVE
SUITE 100
RANCHO CORDOVA, CA 95670

EROSION CONTROL QUANTITIES

FROM			TO			HYDROSEED	ROLLED EROSION CONTROL PRODUCT (BANKET)	COMPOST	COIR WATTLES	WILLOW CUTTINGS	COMMENTS
LINE	FROM	OFFSET	LINE	TO	OFFSET	SQFT	SQFT	SQFT	LF	EA	
"B"	08+38.00	LT/RT	"B"	09+27.00	LT/RT					19	PLACED IN THE RSP
"B"	09+14.00	LT/RT	"B"	10+12.00	LT/RT					21	PLACED IN THE RSP
"B"	00+08.86	LT	"B"	00+51.00	LT	806	806		60		CASE 1
"B"	01+02.00	LT	"B"	01+07.00	LT	1699	1699		120		CASE 1
"B"	00+77.00	LT	"B"	01+55.00	LT	1914	1914		148		CASE 1
"B"	02+50.00	LT	"B"	09+45.00	LT	7708	7708		616		CASE 1
"B"	03+88.00	RT	"B"	07+10.00	RT	2951	2951		355		CASE 1
"B"	08+17.00	LT	"B"	08+73.00	LT	1129	1129		60		CASE 1
"B"	09+06.00	RT	"B"	09+40.00	RT	591	591		50		CASE 1
"B"	09+57.00	RT	"B"	11+86.00	RT	8116	8116		670		CASE 1
"B"	12+18.00	RT	"B"	13+32.00	RT	269	269		110		CASE 1
"B"	09+80.00	LT	"B"	10+27.00	LT	516	516		60		CASE 1
"B"	10+41.00	LT	"B"	13+30.00	LT	2000	2000		300		CASE 1
"B"	00+16.00	LT	"B"	00+79.00	LT	1525		1525	60		CASE 2
"B"	00+95.00	LT	"B"	10+15.00	LT	12663		12663	875		CASE 2
"B"	03+88.00	LT	"B"	08+30.00	LT	13056		13056	1140		CASE 2
"B"	05+43.00	RT	"B"	09+10.00	RT	9792		9792	975		CASE 2
"B"	11+53.00	RT	"B"	12+04.00	RT	734		734	70		CASE 2
"B"	12+12.00	RT	"B"	12+18.00	RT	41		41	24		CASE 2
"B"	12+81.00	LT	"B"	13+56.00	LT	316		316	45		CASE 2
					TOTAL	65825	27697	38128	5738	40	

SURVEY MONUMENT

LINE	STATION	OFFSET	SURVEY MONUMENT
			EA
"B"	2+01.41	0.00'	1
"B"	3+87.95	0.00'	1
"B"	5+01.99	0.00'	1
"B"	8+00.79	0.00'	1
"B"	10+47.71	0.00'	1
"B"	12+21.15	0.00'	1
"B"	13+56.00	0.00'	1
		TOTAL	7

GUARD RAILING QUANITIES

FROM			TO			TRANSITION RAILING (TYPE WB-31)	ALTERNATIVE FLARED TERMINAL SYSTEM	ALTERNATIVE IN-LINE TERMINAL SYSTEM	CRASH CUSHION (TYPE TRACC)	OBJECT MARKER (TYPE L-1)	OBJECT MARKER (TYPE P)
LINE	FROM	OFFSET	LINE	TO	OFFSET	EA	EA	EA	EA	EA	EA
"B"	7+75.00	21.00' LT	"B"	8+43.43	16.00' LT	1	1			1	1
"B"	7+90.00	21.00' RT	"B"	8+55.59	16.00' RT	1	1			1	1
"B"	9+93.09	16.00' RT	"B"	10+71.22	16.00' RT	1		1		1	1
"B"	9+88.63	16.00' LT	"B"	10+04.00	16.00' LT				1	1	1
"B"	7+25.00	18.50' LT								1	
					TOTAL	3	2	1	1	5	4

FROM			TO			TEMPORARY FENCE (TYPE ESA)	FENCE (TYPE BW, METAL POST)	REMOVE FENCE
LINE	FROM	OFFSET	LINE	TO	OFFSET	LF	LF	LF
"B"	3+88.00	25.00' LT	"B"	8+78.29	64.00' TL	445		
"B"	9+07.00	64.00' TL	"B"	9+37.79	64.00' TL	31		
"B"	10+47.64	84.81 LT	"B"	13+56.00	25.00' LT	337		
"B"	3+88.00	25.00' LT	"B"	9+40.46	73.00' RT	634		
"B"	9+69.64	73.00' RT	"B"	12+03.68	59.09' RT	313		
"B"	12+15.00	56.49' RT	"B"	13+56.00	25' RT	179		
ACCESS ROAD						1871		
"B"	3+88.50	46.02' LT	"B"	8+48.52	17.42 LT		418	
"B"	5+67.19	27.02' RT	"B"	8+58.32	17.42 LT		378	
"B"	9+90.45	17.42' RT	"B"	11+90.10	17.42 LT		221	
"B"	5+64.93	14.74 LT	"B"	8+64.41	9.40' LT			299
					TOTAL	3810	1017	299

ROADWAY QUANTITIES

FROM			TO			ROADWAY EXCAVATION	EMBANKMENT (N)	IMPORTED BORROW	HOT MIX ASPHALT (TYPE A)	TACK COAT	CLASS 2 AGGREGATE BASSE	REMOVE ASPHALT CONCRETE PAVEMENT	PLACE HMA DIKE (TYPE C)	PLACE HMA DIKE (TYPE F)	PLACE HMA (MISCELLANEOUS AREA)	ROCK SLOPE PROTECTION (1/4 T, METHOD A)	ROCK SLOPE PROTECTION (NO. 1, METHOD B)	GRAVEL FILTER	ROCK SLOPE PROTECTION FABRIC (CLASS 8)	TEMPORARY AGGRGATE BASE	TEMPORARY ROCK SLOPE PROTECTION FABRIC (CLASS 8)	PAINT TRAFFIC STRIPE	RELOCATE ROADSIDE SIGN	ROADSIDE SIGN - ONE POST	FURNISH SINGLE SHEET ALUMINUM SIGN (0.063"-UNFRAMED)	COMMENTS
LINE	FROM	OFFSET	LINE	TO	OFFSET	CY	CY	CY	TON	TON	CY	SQFT	LF	LF	SQYD	CY	CY	CY	SQYD	CY	SQYD	LF	EA	EA	SQFT	
"B"	3+87.95	LT/RT	"B"	8+65.50	LT/RT	499	1759	1685	464.5	3.6	909	11453														INCLUDES CONTOUR GRADING
"B"	9+70.50	LT/RT	"B"	13+56.00	LT/RT	356	585	507	397.7	2.8	690	7941														INCLUDES CONTOUR GRADING
"B"	7+32.70	16.00' LT	"B"	8+18.43	16'.00 LT				0.7				86													HMA DIKE
"B"	8+18.43	16.00' LT	"B"	8+43.43	16.00' LT				0.3					25												HMA DIKE
"B"	8+38.00	33.00' LT	"B"	9+27.02	36.61' RT											578	282	109	269.6							ROCK SLOPE PROTECTION
"B"	9+13.99	47.71' LT	"B"	10+12.00	49' LT											670	331	127	296.1							ROCK SLOPE PROTECTION
"B"	3+87.95	LT/RT	"B"	13+56.00																		969				TRAFFIC STRIPE
"B"	5+60.00	LT																						1	13.5	R47 (CA)
"B"	7+50.00	RT																					1			R47 (CA)
"B"	8+61.00	RT																						1	5.25	G11-2
"B"	9+77.00	LT																						1	5.25	G11-2
"B"	8+11.00	LT																						1	1.67	G11-10 (CA)
"B"	3+96.00	Lt																						1	1.67	G11-10 (CA)
"B"	7+22.70	17.00' LT	"B"	7+22.05	40.79' LT				1.6						9.4		1.4		5.3							OVERSIDE DRAIN
"B"	7+22.05	43.41' LT	"B"	8+41.43	50.60' LT												22.4		83.9							ROCK LINED DITCH
ACCESS ROAD																				176	1637					
					TOTAL	855	2344	2192	864.8	6.4	1599	19394	86	25	9.4	1248	636.8	236	654.9	176	1637	969	1	5	27.34	

(N) – NOT A PAY ITEM, FOR INFORMATION ONLY.

FOR REDUCED PLANS ORIGINAL SCALE IS IN INCHES 0 1 2 3

	BY	DATE
DESIGN	R. GARCIA	
DRAWN	R. GARCIA	
SCALE: 1"=50'		
CONTRACT # 300385		

SAN LUIS OBISPO COUNTY
DEPARTMENT OF PUBLIC WORKS
1050 Monterey Street
San Luis Obispo, CA 93408
Phone: (805) 781-5252 FAX: (805) 781-1229

QUINCY ENGINEERING

TAR SPRING CREEK BRIDGE ON BRANCH MILL ROAD
SUMMARY OF QUANTITIES

SHEET No.
Q-1

S:\Client\SLO-County\S13-910 Branch Mill Rd\CAD_Civil 30 2012\S13910rpa001.dwg 1/5/2015 7:51 AM

DIST	COUNTY	PROJECT	SHEET No	TOTAL SHEETS
05	SLO	TAR SPRING CREEK BRIDGE ON BRANCH MILL ROAD	16	30

REGISTERED CIVIL ENGINEER — DATE 12/19/14

PLANS APPROVAL DATE

REGISTERED PROFESSIONAL ENGINEER — Danny J. Mossman No. C70850 CIVIL STATE OF CALIFORNIA

The County or its officers or agents shall not be responsible for the accuracy or completeness of electronic copies of this plan sheet.

QUINCY ENGINEERING, INC
11017 Cobblerock Drive, Suite 100
Rancho Cordova, CA 95670

INDEX TO PLANS

Sheet No.	Title
BR1	General Plan
BR2	Deck Contours
BR3	Foundation Plan
BR4	Abutment Layout
BR5	Abutment Details
BR6	Typical Section
BR7	Girder Layout
BR8	PC/PS Bulb-Tee Girder (Harped Strands)
BR9	PC/PS Bulb-Tee Girder (Miscellaneous Details)
BR10	Structure Drainage Details
BR11	Tubular Bicycle Railing Details
BR12	Log of Test Borings No. 1 of 4
BR13	Log of Test Borings No. 2 of 4
BR14	Log of Test Borings No. 3 of 4
BR15	Log of Test Borings No. 4 of 4

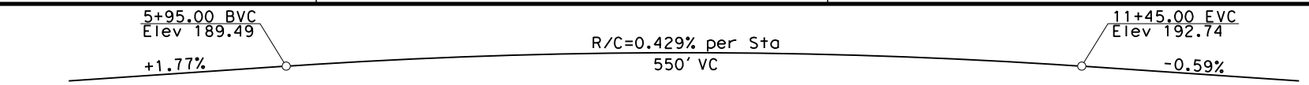

PROFILE GRADE

No Scale

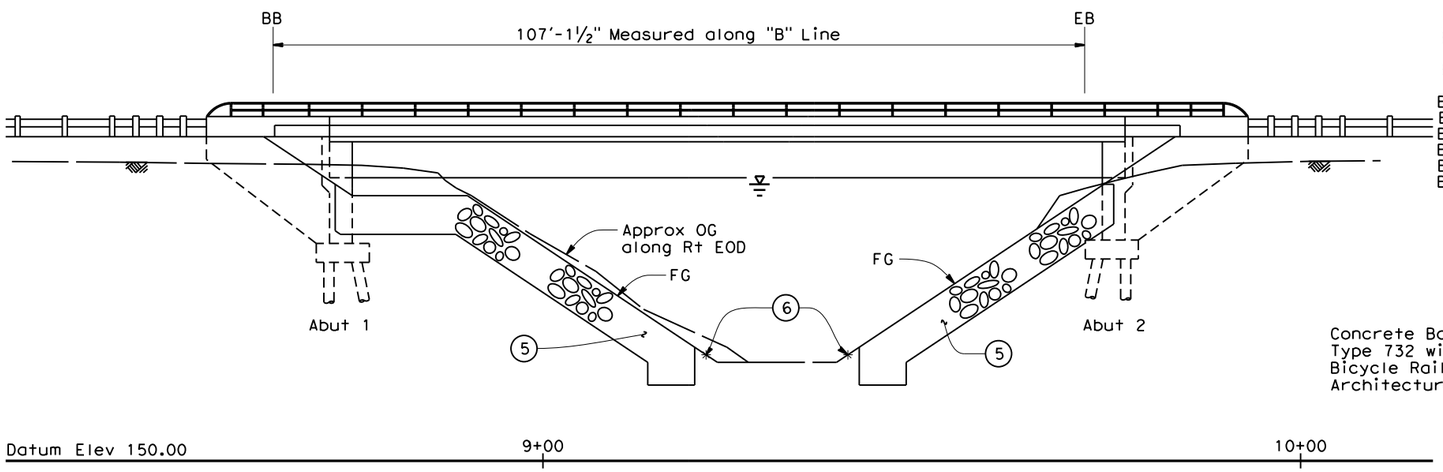

ELEVATION

1"=10'

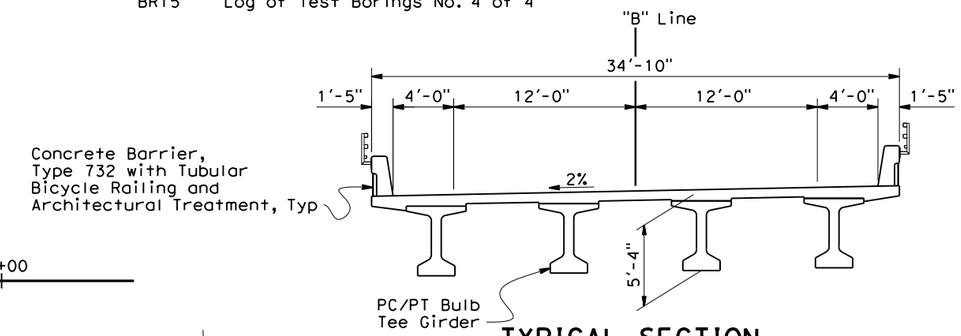

TYPICAL SECTION

1"=5'

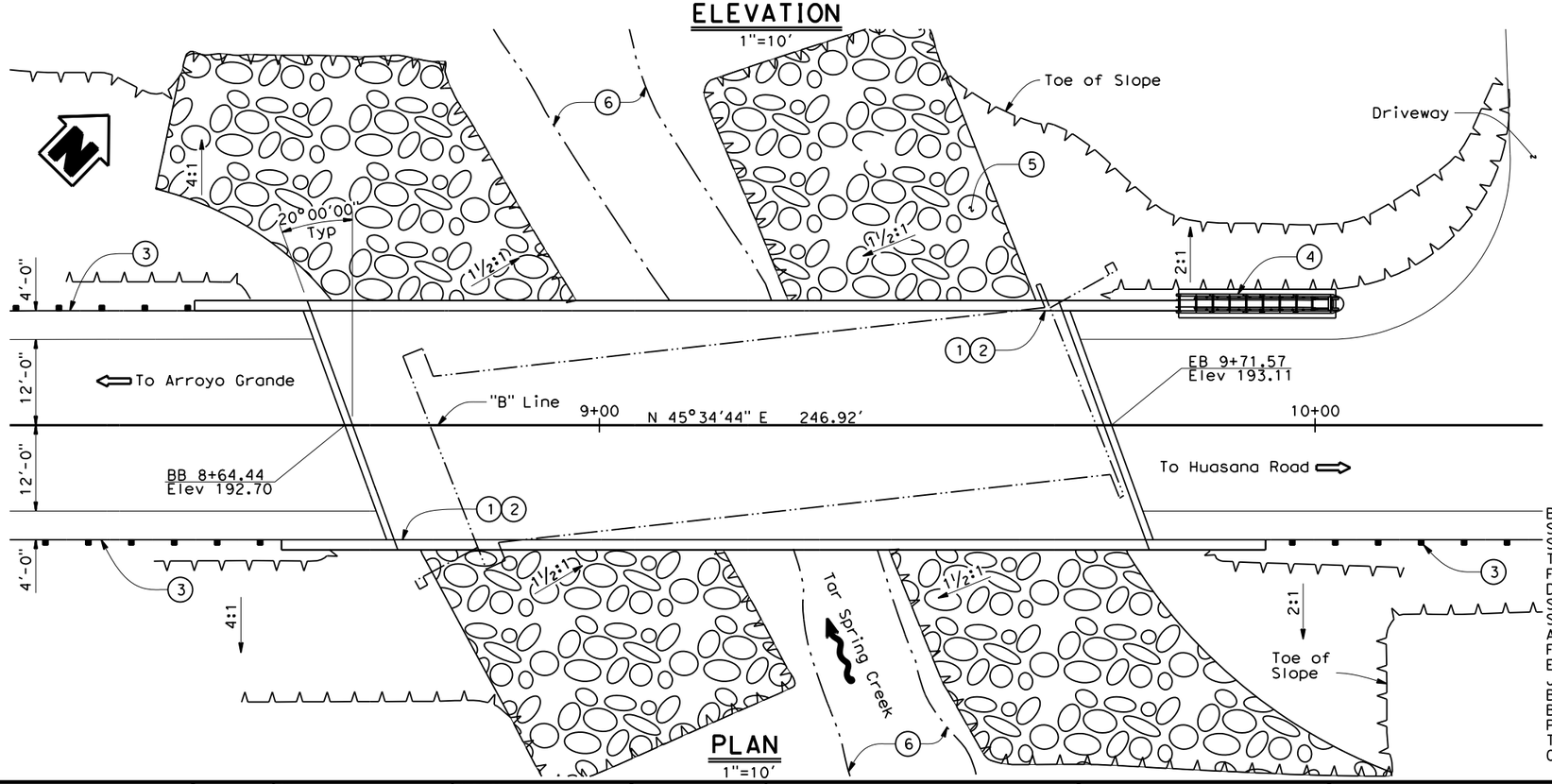

PLAN

1"=10'

Notes:

1. Paint "Tar Spring Creek Bridge"
2. Paint Bridge "Br No. 49C0459 Built 2015"
3. MGS see "Road Plans"
4. Crash Cusion (Type TRACC), see Road Plans
5. RSP see "Road Plans"
6. Ordinary High Water

For Hydrologic Summary, see "Foundation Plan" sheet

Existing Bridge 49C-0143 to be removed

Indicates direction of flow

Indicates direction of travel

For General Notes and Standard Plans, see "Deck Contours" sheet

QUANTITIES

Bridge Removal	Lump Sum
Structure Excavation (Bridge)	304 CY
Structure Backfill (Bridge)	194 CY
Temporary Bridge	Lump Sum
Furnish Piling (Class 200) (Alternative W)	1353 LF
Drive Pile (Class 200) (Alternative W)	18 EA
Structural Concrete, Bridge Footing	50 CY
Structural Concrete, Bridge	240 CY
Architectural Treatment	970 SF
Furnish Precast Prestressed Concrete Bulb-Tee Girder (100'-110')	4 EA
Erect Precast Prestressed Concrete Girder	4 EA
Joint Seal (MR = 1½")	75 LF
Bar Reinforcing Steel (Bridge)	54,087 LB
Bar Reinforcing Steel (Epoxy Coated)	1,990 LB
Prepare and Stain Concrete	970 SF
Tubular Bicycle Railing	275 LF
Concrete Barrier (Type 732)	275 LF

DESIGN	BY E. Dahl	CHECKED B. Karnes	LOAD & RESISTANCE FACTOR DESIGN	LIVE LOADING: HL93; PERMIT DESIGN VEHICLE	
DETAILS	BY E. Dahl	CHECKED B. Karnes	LAYOUT	BY E. Dahl	CHECKED B. Karnes
QUANTITIES	BY R. Kotey	CHECKED J. Cruz	SPECIFICATIONS	BY K. Gallagher	PLANS AND SPECS COMPARED C. Davis

PREPARED FOR THE COUNTY OF SAN LUIS OBISPO DEPARTMENT OF PUBLIC WORKS

Greg R. Young
PROJECT ENGINEER

BRIDGE NO. 49C0459
POST MILES X

TAR SPRING CREEK BRIDGE
GENERAL PLAN

DESIGN GENERAL PLAN SHEET (ENGLISH) (REV.7/16/10)

ORIGINAL SCALE IN INCHES FOR REDUCED PLANS 0 1 2 3

FEDERAL ID #: BRLO-5949(116) CONTRACT NO.: 300385

DISREGARD PRINTS BEARING EARLIER REVISION DATES 12/19/14 2/10/15

SHEET BR1 OF BR15

FILE => S:\Client\SLO-County\S13-910 Branch Mill Rd\CAD\S13910a-a-gp01.dgn

USERNAME => dannym DATE PLOTTED => 2/10/2015 TIME PLOTTED => 2:02:49 PM

DIST	COUNTY	PROJECT	SHEET No	TOTAL SHEETS
05	SLO	TAR SPRING CREEK BRIDGE ON BRANCH MILL ROAD	17	30

REGISTERED CIVIL ENGINEER — DATE 12/19/14

PLANS APPROVAL DATE

REGISTERED PROFESSIONAL ENGINEER — Danny J. Mossman No. C70850 CIVIL STATE OF CALIFORNIA

The County or its officers or agents shall not be responsible for the accuracy or completeness of electronic copies of this plan sheet.

QUINCY ENGINEERING, INC
11017 Cobblerock Drive, Suite 100
Rancho Cordova, CA 95670

GENERAL NOTES
LOAD AND RESISTANCE FACTOR DESIGN

DESIGN: AASHTO LRFD Bridge Design Specifications 4th Edition with Interims through 2011 and the Caltrans Amendments v4; except that Standard Plans dated 2010 and Standard Bridge Details XS sheets are designed using Bridge Design Specifications (1996 AASHTO w/Revisions by Caltrans)

SEISMIC DESIGN: Caltrans Seismic Design Criteria (SDC), Version 1.6 dated November 2010

DEAD LOADING: Includes 35 psf for future wearing surface. The deck load between the girders has been increased by a factor of 10% to allow for the use of stay in place deck forms.

LIVE LOADING: HL93 and Permit design load

SEISMIC LOADING: SDC ARS Curve with V_{S30} = 175 m/s
Maximum Magnitude 7.2
Peak Horizontal ground Acceleration = 0.52 g

REINFORCED CONCRETE: f_y = 60 ksi
f'_c = 3.6 ksi, unless otherwise noted
n = 8

PRESTRESSED CONCRETE: See Prestressing Notes on "PC/PS Bulb-Tee Girder (Harped Strands)" sheet

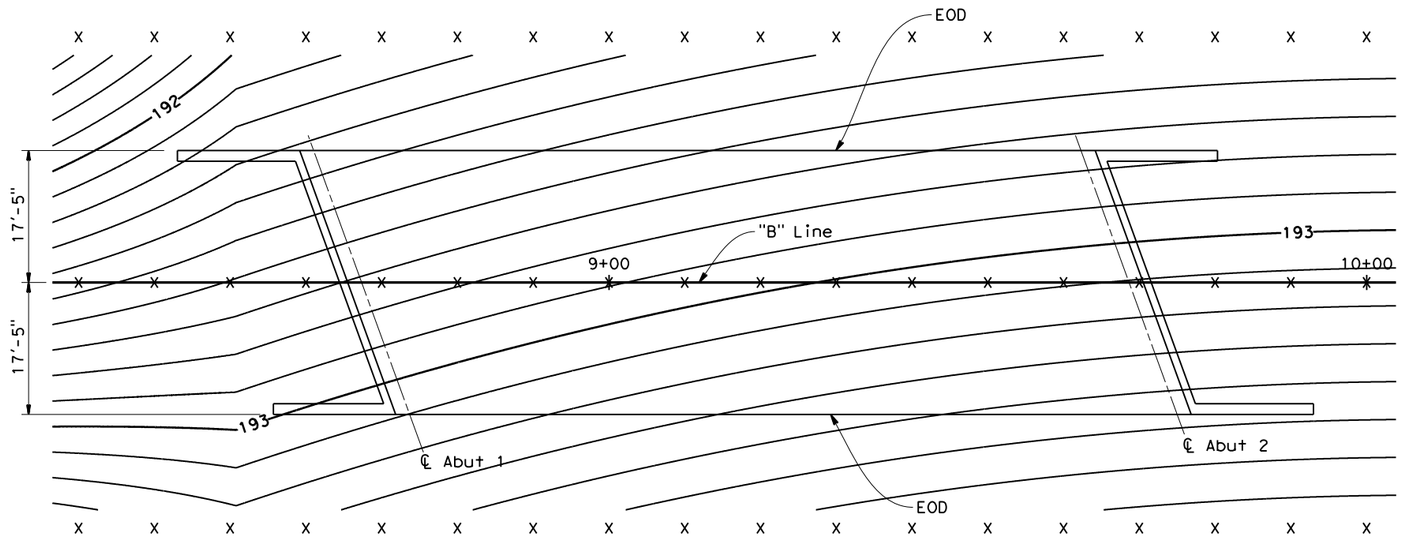

PLAN
1"=10'

Notes:

X = 10' intervals along station line

Contours Intervals = 0.10'

Contours do not include camber

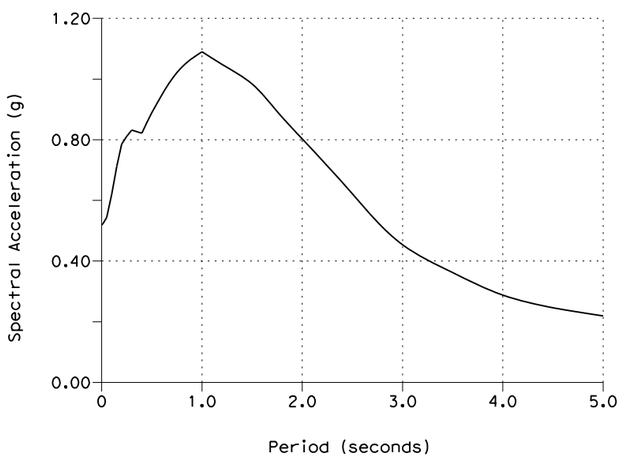

ACCELERATION RESPONSE SPECTRA CURVE
No Scale

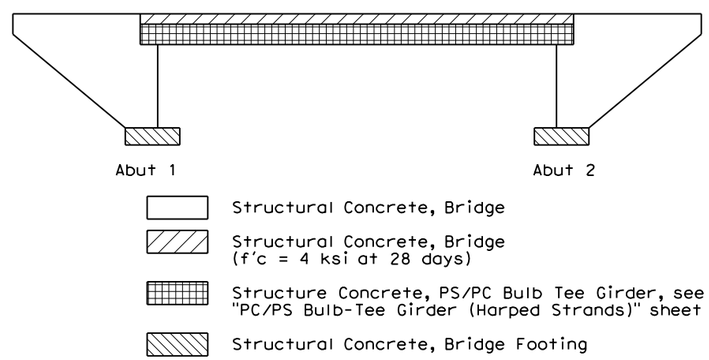

CONCRETE STRENGTH AND TYPE LIMITS
No Scale

STANDARD PLANS DATED 2010

A10A	Abbreviations (sheet 1 of 2)
A10B	Abbreviations (sheet 2 of 2)
A10C	Lines and Symbols (sheet 1 of 3)
A10D	Lines and Symbols (sheet 2 of 3)
A10E	Lines and Symbols (sheet 3 of 3)
A62C	Limits of Payment for Excavation and Backfill- Bridge
B0-1	Bridge Details
B0-5	Bridge Details
B0-13	Bridge Details
B2-8	Pile Details Class 200
B6-10	Utility Openings T-Beam
B6-21	Joint Seals (Maximum Movement Rating = 2")
B7-1	Box Girder Details
RSP B11-55	Concrete Barrier Type 732

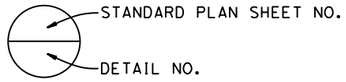

	BY	CHECKED
DESIGN	E. Dahl	B. Karnes
DETAILS	R. Ramirez	B. Karnes
QUANTITIES	R. Kotey	J. Cruz

PREPARED FOR THE COUNTY OF SAN LUIS OBISPO DEPARTMENT OF PUBLIC WORKS

Greg R. Young
PROJECT ENGINEER

BRIDGE NO. 49C0459
POST MILE X

TAR SPRING CREEK BRIDGE
DECK CONTOURS

DESIGN DETAIL SHEET (ENGLISH) (REV.7/16/10)

ORIGINAL SCALE IN INCHES FOR REDUCED PLANS 0 1 2 3

FEDERAL ID #: BRLO-5949(116) CONTRACT NO.: 300385

DISREGARD PRINTS BEARING EARLIER REVISION DATES 12/19/14 01/26/15

SHEET BR2 OF BR15

FILE => S:\Client\SLO-County\S13-910 Branch Mill Rd\CAD\S13910a-d-dc01.dgn

USERNAME => bobm DATE PLOTTED => 2/10/2015 TIME PLOTTED => 11:04:58 AM

DIST	COUNTY	PROJECT	SHEET No	TOTAL SHEETS
05	SLO	TAR SPRING CREEK BRIDGE ON BRANCH MILL ROAD	18	30

REGISTERED CIVIL ENGINEER 12/19/14 DATE

PLANS APPROVAL DATE

REGISTERED PROFESSIONAL ENGINEER Danny J. Mossman No. C70850 CIVIL STATE OF CALIFORNIA

The County or its officers or agents shall not be responsible for the accuracy or completeness of electronic copies of this plan sheet.

QUINCY ENGINEERING, INC
11017 Cobblerock Drive, Suite 100
Rancho Cordova, CA 95670

LOAD AND RESISTANCE FACTOR DESIGN PILE DATA TABLE

WORKING STRESS DESIGN (LRFD SERVICE-I LIMIT STATE LOAD COMBINATION)						
LOCATION	PILE TYPE	NOMINAL RESISTANCE (kips)		DESIGN TIP ELEVATION	SPECIFIED TIP ELEVATION	NOMINAL DRIVING RESISTANCE
		COMPRESSION	TENSION			
Abut 1	CLASS 200 PP16x0.5	400	N/A	95 (1,2), 145 (3)	90*	400
Abut 2	CLASS 200 PP16x0.5	400	N/A	120 (1,2), 145 (3)	115*	400

Design Tip Elevation is controlled by the following demands: (1) Compression, (2) Settlement, (3) Lateral Loads.

*See Note 1

BENCH MARK DATA

No.	NORTHING	EASTING	ELEVATION	LINE	STATION	OFFSET	DESCRIPTION
3	12764229.76	2375206.21	191.82	"B"	13+55.29	0.35'Lt	MAG NAIL AND TIN
4	12763973.13	2375018.60	190.04	"B"	10+33.62	11.49'Lt	MAG NAIL AND TIN
5	12763743.34	2374837.69	190.37	"B"	7+50.21	32.32'Rt	MAG NAIL AND TIN
6	12763796.77	2374635.55	183.29	"B"	5+39.62	48.92'Lt	REBAR

Notes:

1. Specified Tip Elevations have been lowered to account for uncertainty in rock elevations.

2. Limited vertical clearance for pile installation exists due to overhead utility. The utility line is located at approximately Elev 280 and a minimum clearance of 20' is required at all times during construction.

Legend:

Indicates bottom of footing elevation

Indicates PP16x0.5 pile (Not all piles shown)

HYDROLOGIC SUMMARY

Drainage area: 18.3 Square Miles

	Design Flood	Base Flood
Frequency (years)	50	100
Discharge (cubic feet per second)	6640	10010
Water Surface Elev at Bridge (ft)	182.8	186.5

Flood plain data based upon information available when the plans were prepared and are shown to meet Federal requirments.The accuracy of said information is not warranted by the County and interested or affected parties should make their own investigations.

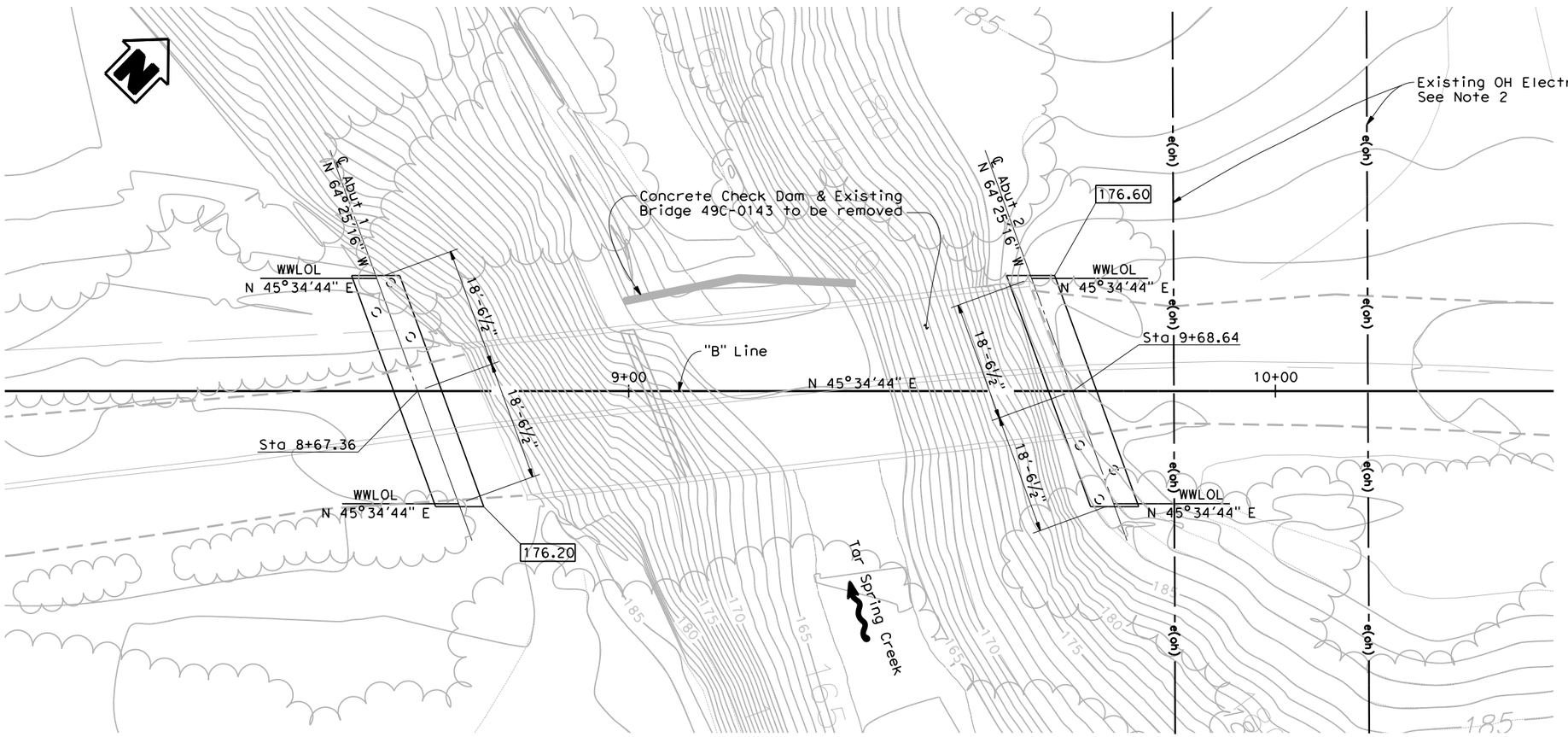

PLAN

1"=10'

X GEOTECHNICAL PROFESSIONAL APPROVAL DATE

SCALE: As Shown	VERT.DATUM NGVD 29	HORZ.DATUM GPS	
PHOTOGRAMMETRY AS OF: 4-12-11		ALIGNMENT TIES Bearing CP#3 & #7	
SURVEYED	BY McMillan	DRAFTED	BY McMillan
FIELD CHECKED	BY McMillan	CHECKED	BY McMillan

	BY	CHECKED
DESIGN	E. Dahl	B. Karnes
DETAILS	R. Ramirez	B. Karnes
QUANTITIES	R. Kotey	J. Cruz

PREPARED FOR THE COUNTY OF SAN LUIS OBISPO DEPARTMENT OF PUBLIC WORKS

Greg R. Young
PROJECT ENGINEER

BRIDGE NO. 49C0459
POST MILE X

TAR SPRING CREEK BRIDGE
FOUNDATION PLAN

FOUNDATION PLAN SHEET (ENGLISH) (REV.7/16/10)

ORIGINAL SCALE IN INCHES FOR REDUCED PLANS 0 1 2 3

FEDERAL ID #: BRLO-5949(116)

CONTRACT NO.: 300385

DISREGARD PRINTS BEARING EARLIER REVISION DATES

REVISION DATES 12/19/14

SHEET BR3 OF BR15

FILE => S:\Client\SLO-County\S13-910 Branch Mill Rd\CAD\S13910a-e-fp101.dgn

USERNAME => bobm DATE PLOTTED => 2/10/2015 TIME PLOTTED => 11:05:10 AM

DIST	COUNTY	PROJECT	SHEET No	TOTAL SHEETS
05	SLO	TAR SPRING CREEK BRIDGE ON BRANCH MILL ROAD	19	30

REGISTERED CIVIL ENGINEER — DATE 12/19/14

PLANS APPROVAL DATE

REGISTERED PROFESSIONAL ENGINEER — Danny J. Mossman No. C70850 CIVIL — STATE OF CALIFORNIA

The County or its officers or agents shall not be responsible for the accuracy or completeness of electronic copies of this plan sheet.

QUINCY ENGINEERING, INC
11017 Cobblerock Drive, Suite 100
Rancho Cordova, CA 95670

Notes:

1. For sections and details not shown, see "Abutment Details" sheet.
2. Expanded Polystyrene and Hardboard to be removed 6" from abutment face.
3. Abutment 1 shown, Abutment 2 similar.
4. Limits of Concrete Barrier (Type 732A) with Tubular Bicycle Railing.
5. For Drainage Details, see "Structure Drainage Details" sheet.

Legend:

- Indicates PP16x0.5 Pile
- Indicates battered PP16x0.5 Pile

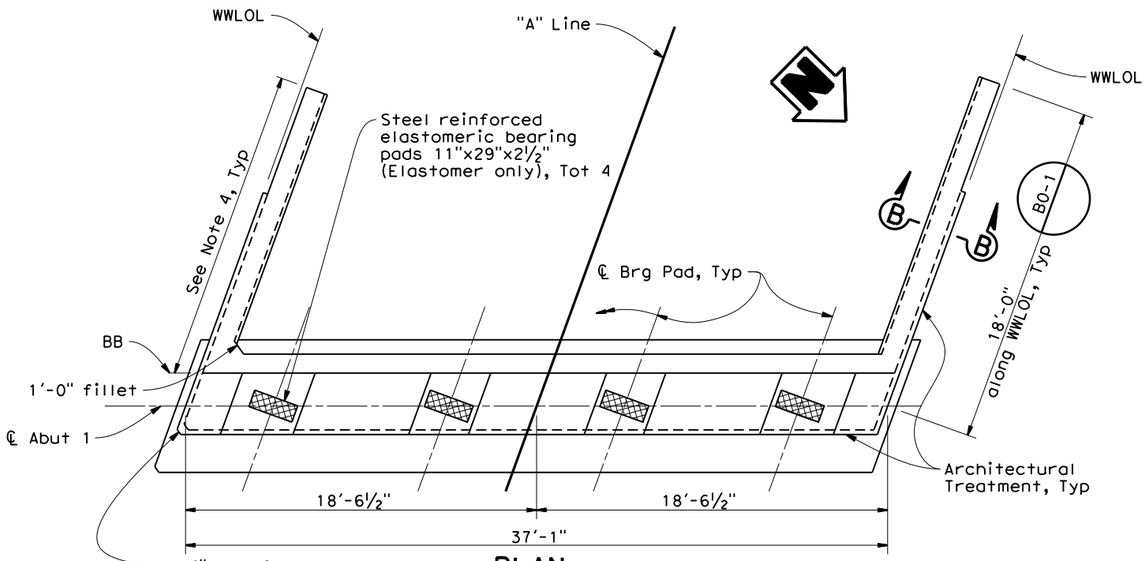

PLAN
¼"=1'-0"

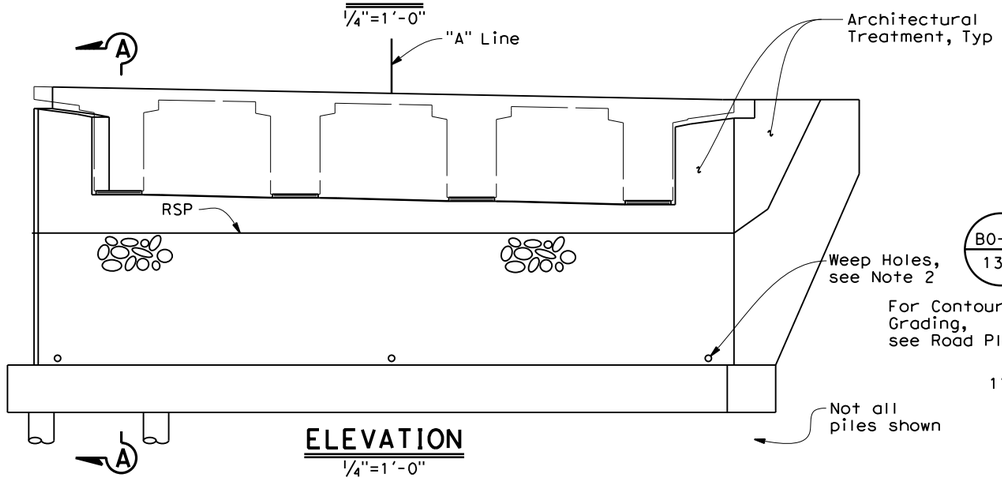

ELEVATION
¼"=1'-0"

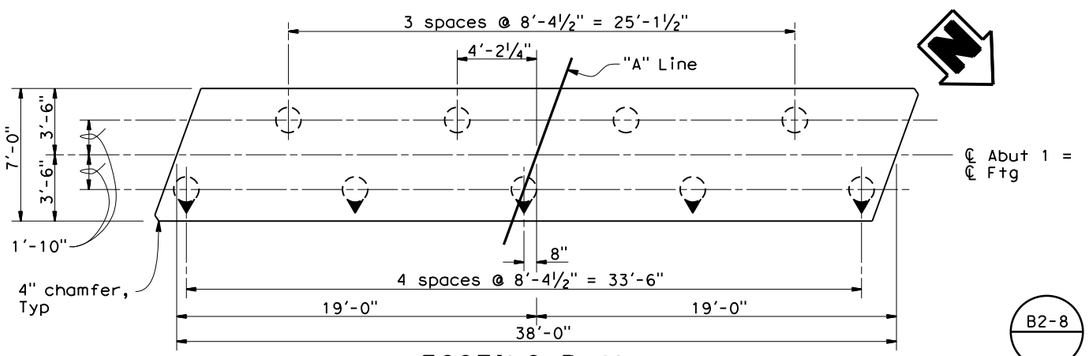

FOOTING PLAN
¼"=1'-0"

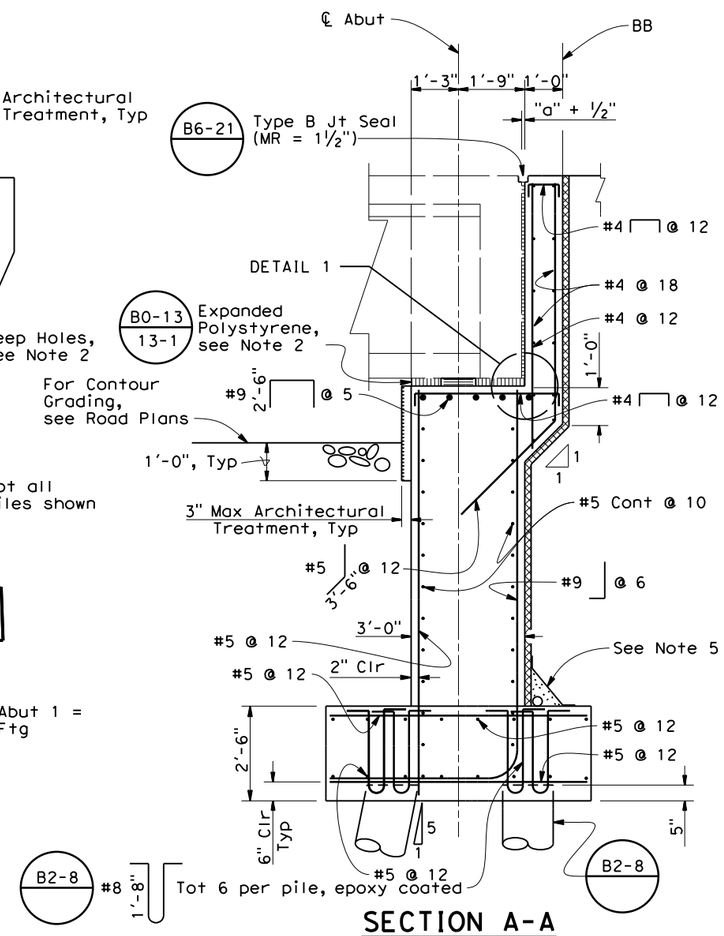

SECTION A-A
½"=1'-0"

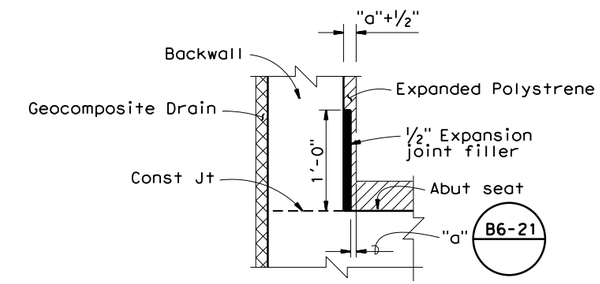

DETAIL 1
No Scale

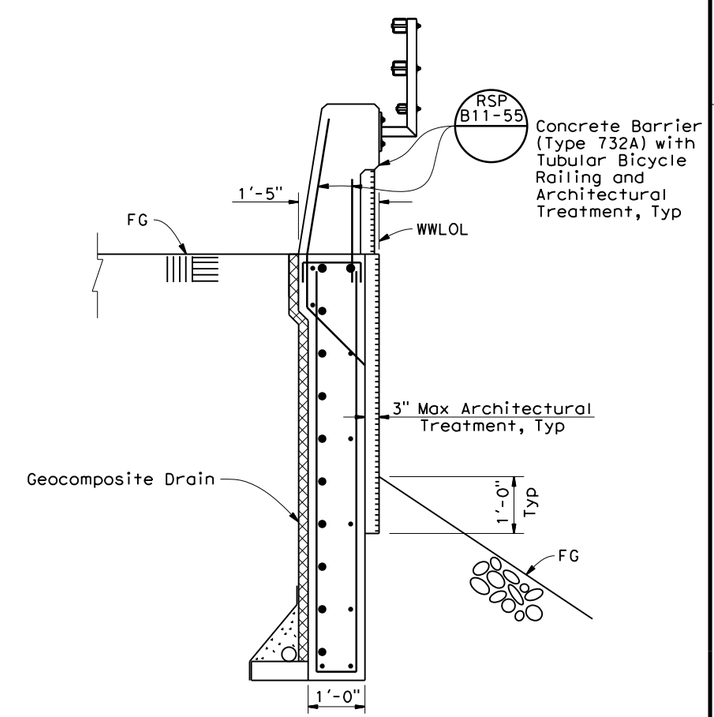

SECTION B-B
¾"=1'-0"

DESIGN	BY E. Dahl	CHECKED B. Karnes	PREPARED FOR THE COUNTY OF SAN LUIS OBISPO DEPARTMENT OF PUBLIC WORKS
DETAILS	BY R. Ramirez	CHECKED B. Karnes	
QUANTITIES	BY R. Kotey	CHECKED J. Cruz	

Greg R. Young
PROJECT ENGINEER

BRIDGE NO. 49C0459
POST MILE X

TAR SPRING CREEK BRIDGE
ABUTMENT LAYOUT

DESIGN DETAIL SHEET (ENGLISH) (REV.7/16/10)

ORIGINAL SCALE IN INCHES FOR REDUCED PLANS 0 1 2 3

FEDERAL ID #: BRLO-5949(116) CONTRACT NO.: 300385

DISREGARD PRINTS BEARING EARLIER REVISION DATES 12/19/14 2/10/15

SHEET BR4 OF BR15

FILE => S:\Client\SLO-County\S13-910 Branch Mill Rd\CAD\S13910a-f-a01_1o01.dgn

USERNAME => dannym DATE PLOTTED => 2/10/2015 TIME PLOTTED => 2:04:51 PM

DIST	COUNTY	PROJECT	SHEET No	TOTAL SHEETS
05	SLO	TAR SPRING CREEK BRIDGE ON BRANCH MILL ROAD	20	30

REGISTERED CIVIL ENGINEER — DATE 12/19/14

PLANS APPROVAL DATE

REGISTERED PROFESSIONAL ENGINEER — Danny J. Mossman No. C70850 CIVIL — STATE OF CALIFORNIA

The County or its officers or agents shall not be responsible for the accuracy or completeness of electronic copies of this plan sheet.

QUINCY ENGINEERING, INC
11017 Cobblerock Drive, Suite 100
Rancho Cordova, CA 95670

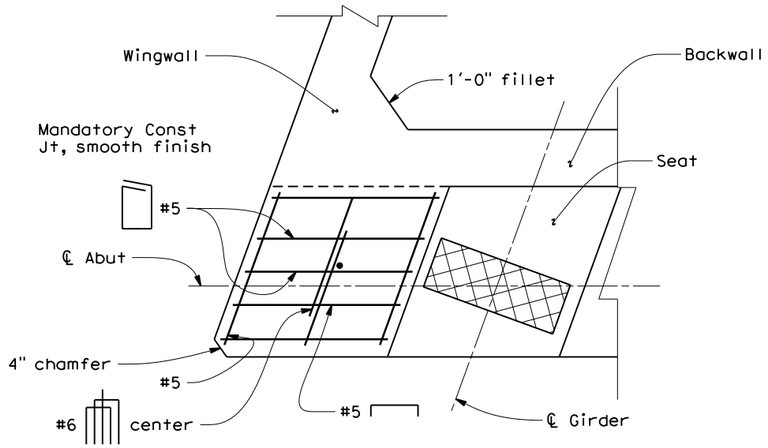

SECTION C-C

3/4"=1'-0"

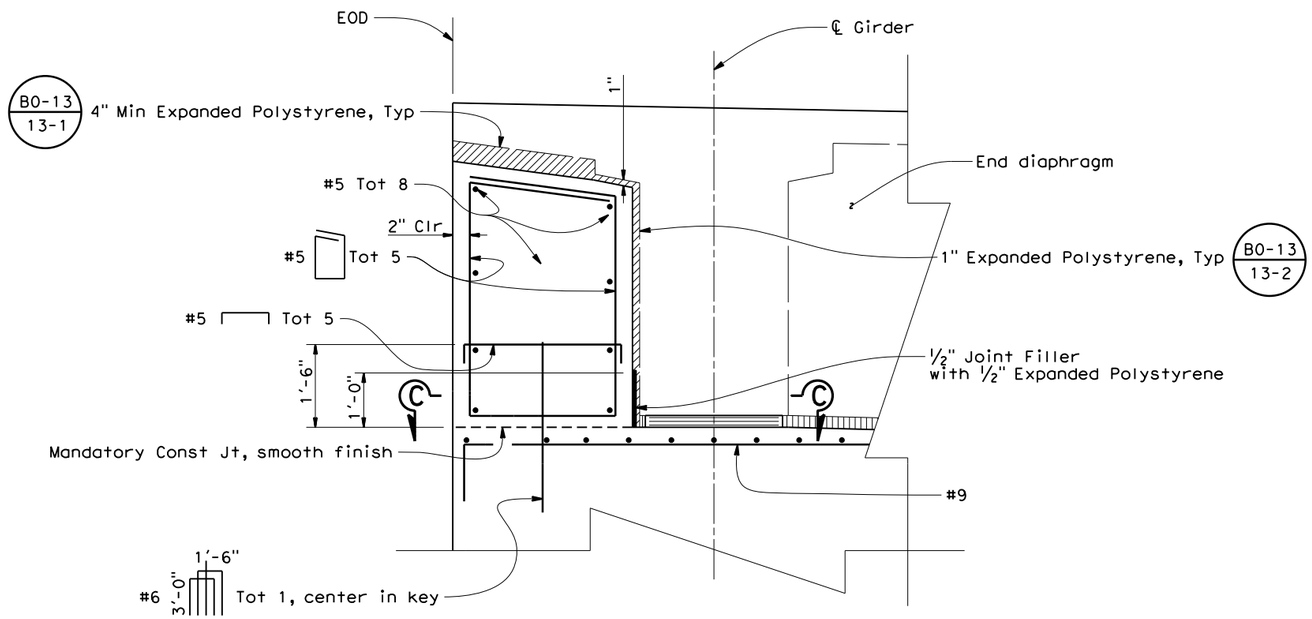

SHEAR KEY ELEVATION

3/4"=1'-0"

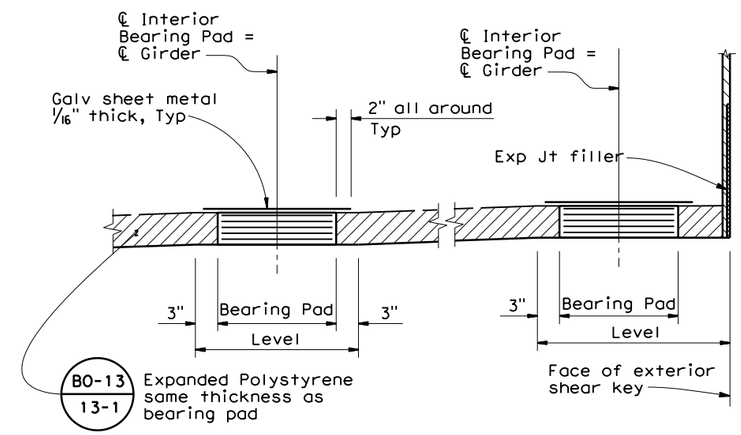

BEARING PAD DETAIL

No Scale

DESIGN	BY E. Dahl	CHECKED B. Karnes	PREPARED FOR THE COUNTY OF SAN LUIS OBISPO DEPARTMENT OF PUBLIC WORKS
DETAILS	BY R. Ramirez	CHECKED B. Karnes	
QUANTITIES	BY R. Kotey	CHECKED J. Cruz	

Greg R. Young
PROJECT ENGINEER

BRIDGE NO. 49C0459
POST MILE X

TAR SPRING CREEK BRIDGE
ABUTMENT DETAILS

DESIGN DETAIL SHEET (ENGLISH) (REV.7/16/10)

ORIGINAL SCALE IN INCHES FOR REDUCED PLANS 0 1 2 3

FEDERAL ID #: BRLO-5949(116) CONTRACT NO.: 300385

DISREGARD PRINTS BEARING EARLIER REVISION DATES 12/19/14

REVISION DATES | SHEET BR5 | OF BR15

FILE => S:\Client\SLO-County\S13-910 Branch Mill Rd\CAD\S13910a-f-a01dt01.dgn

USERNAME => boom DATE PLOTTED => 2/10/2015 TIME PLOTTED => 11:05:14 AM

DIST	COUNTY	PROJECT	SHEET No	TOTAL SHEETS
05	SLO	TAR SPRING CREEK BRIDGE ON BRANCH MILL ROAD	21	30

REGISTERED CIVIL ENGINEER — DATE 12/19/14

PLANS APPROVAL DATE

REGISTERED PROFESSIONAL ENGINEER — Danny J. Mossman — No. C70850 — CIVIL — STATE OF CALIFORNIA

The County or its officers or agents shall not be responsible for the accuracy or completeness of electronic copies of this plan sheet.

QUINCY ENGINEERING, INC
11017 Cobblerock Drive, Suite 100
Rancho Cordova, CA 95670

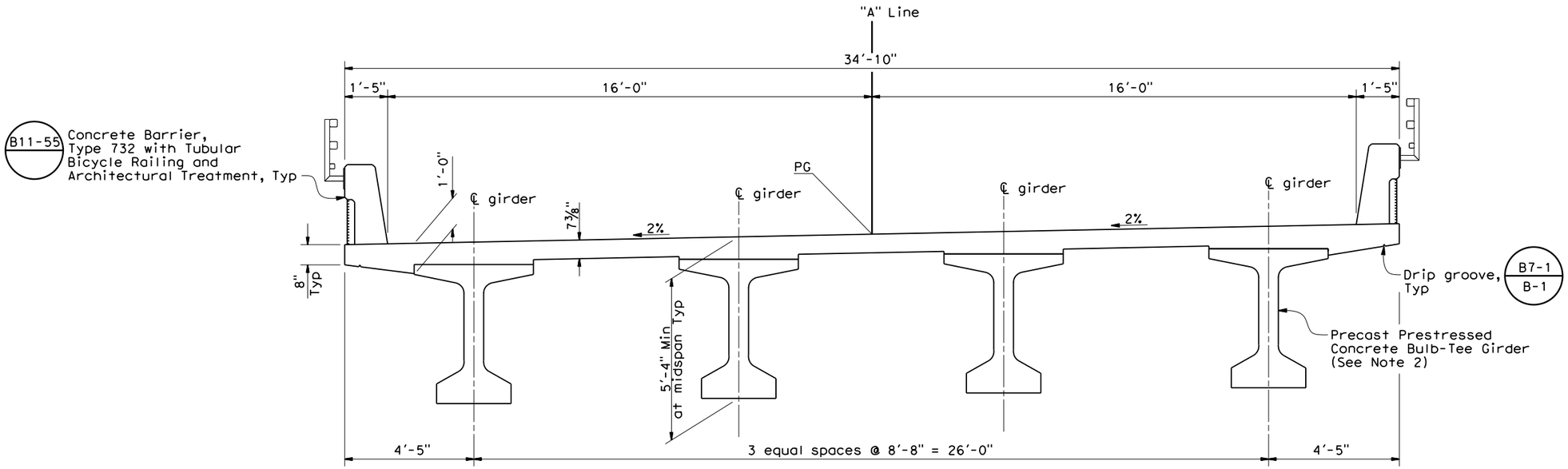

TYPICAL SECTION

1/2"=1'-0"

Notes:

1. Transverse deck reinforcement shall be installed parallel to centerline of abutment and spaced along "B" Line.
2. For Precast Prestressed Concrete Bulb-Tee Girder dimensions and details, see "PC/PS Bulb-Tee Girder (Harped Strands)" and "PC/PS Bulb-Tee Girder (Miscellaneous Details)" sheets.

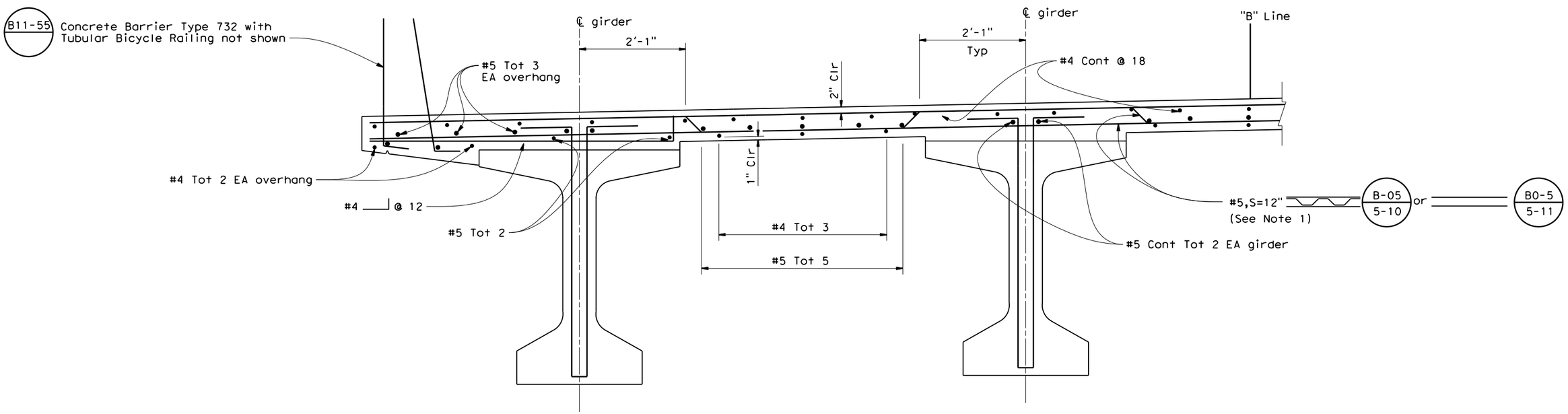

PARTIAL TYPICAL SECTION

1"=1'-0"

	BY	CHECKED
DESIGN	E. Dahl	B. Karnes
DETAILS	R. Ramirez	B. Karnes
QUANTITIES	R. Kotey	J. Cruz

PREPARED FOR THE COUNTY OF SAN LUIS OBISPO DEPARTMENT OF PUBLIC WORKS

Greg R. Young
PROJECT ENGINEER

BRIDGE NO. 49C0459
POST MILE X

TAR SPRING CREEK BRIDGE
TYPICAL SECTION

DESIGN DETAIL SHEET (ENGLISH) (REV.7/16/10)

ORIGINAL SCALE IN INCHES FOR REDUCED PLANS 0 1 2 3

FEDERAL ID #: BRLO-5949(116) CONTRACT NO.: 300385

DISREGARD PRINTS BEARING EARLIER REVISION DATES

REVISION DATES: 12/19/14 2/10/15

SHEET BR6 OF BR15

FILE => S:\Client\SLO-County\S13-910 Branch Mill Rd\CAD\S13910a-k-ts01.dgn

USERNAME => damym DATE PLOTTED => 2/10/2015 TIME PLOTTED => 2:06:34 PM

DIST	COUNTY	PROJECT	SHEET No	TOTAL SHEETS
05	SLO	TAR SPRING CREEK BRIDGE ON BRANCH MILL ROAD	22	30

REGISTERED CIVIL ENGINEER — DATE 12/19/14

PLANS APPROVAL DATE

REGISTERED PROFESSIONAL ENGINEER — Danny J. Mossman No. C70850 CIVIL — STATE OF CALIFORNIA

The County or its officers or agents shall not be responsible for the accuracy or completeness of electronic copies of this plan sheet.

QUINCY ENGINEERING, INC
11017 Cobblerock Drive, Suite 100
Rancho Cordova, CA 95670

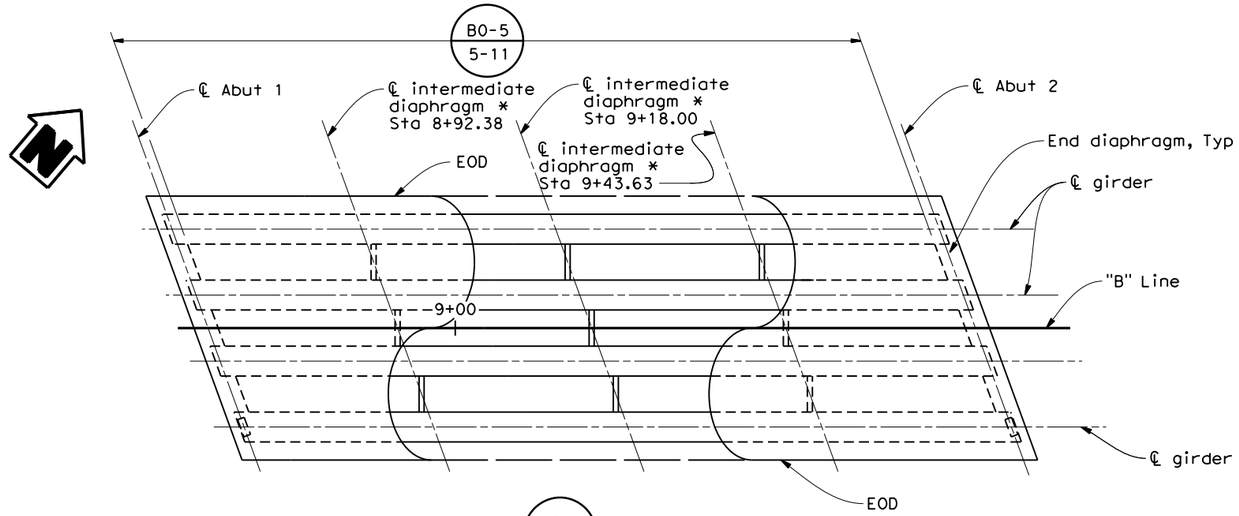

B0-5

* For intermediate diaphragm details, see "PC/PS Bulb-Tee Girder Miscellaneous Details" sheet.

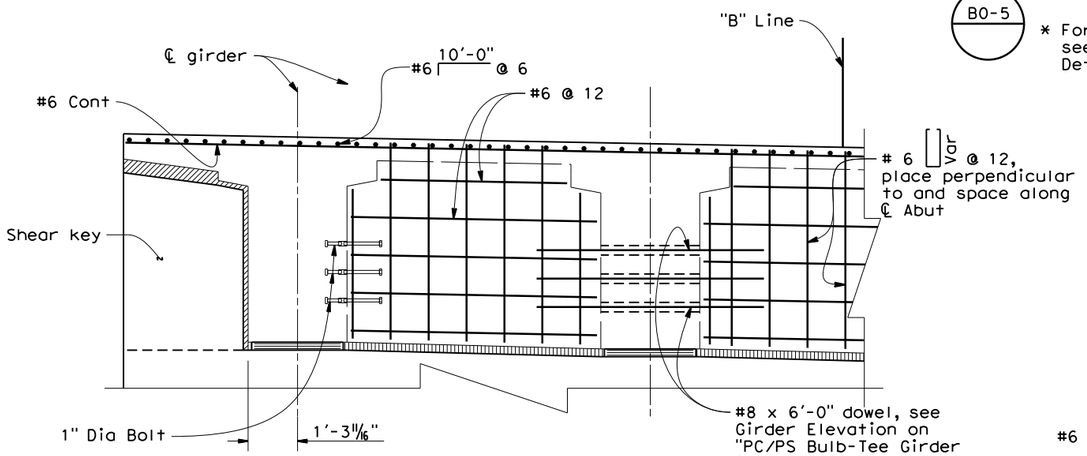

END DIAPHRAGM ELEVATION

1/2"=1'-0

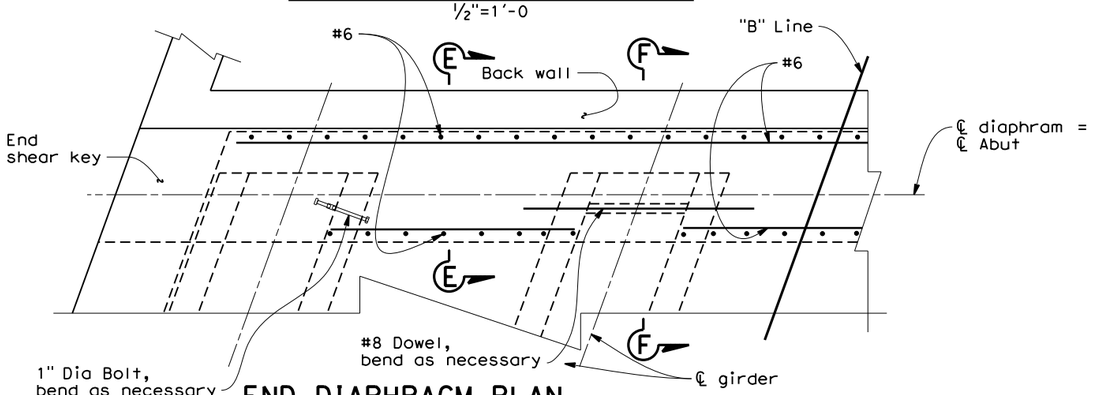

END DIAPHRAGM PLAN

1/2"=1'-0

Note: Optional End block shown. Girders fabricated without end block are similar.

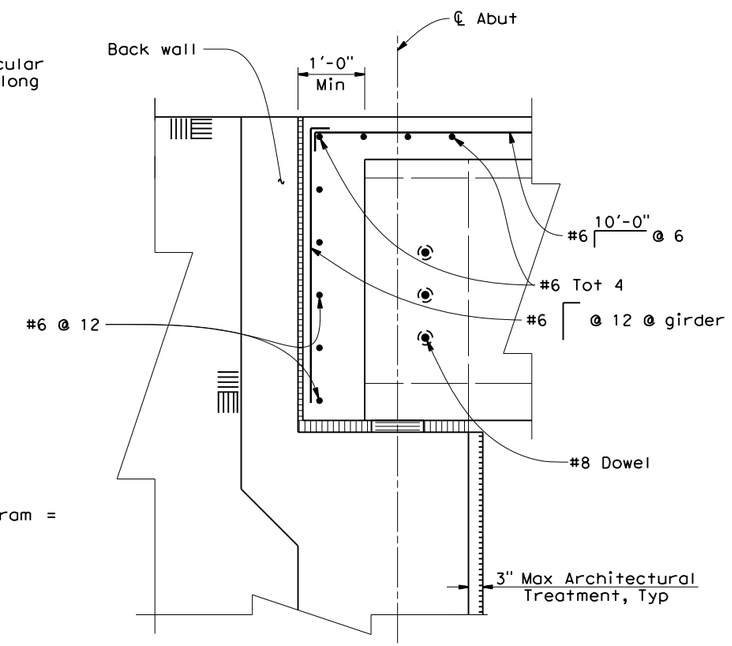

SECTION F-F

3/4"=1'-0

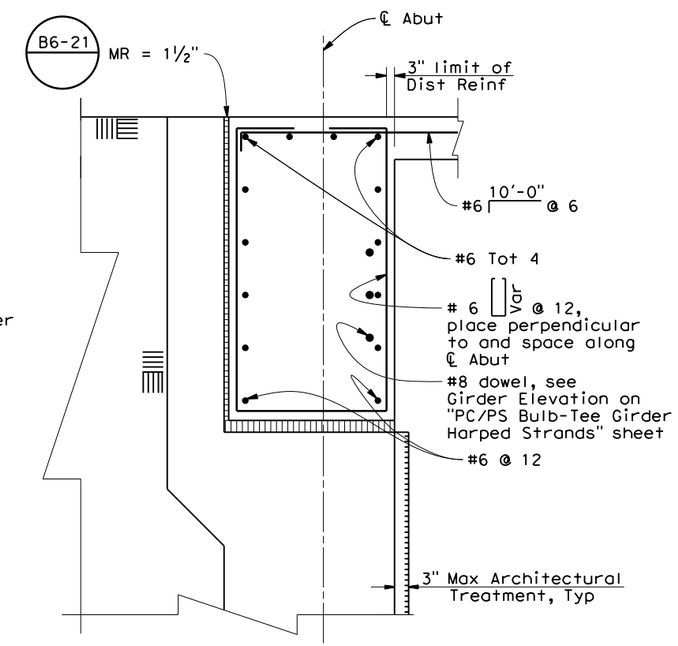

SECTION E-E

3/4"=1'-0

	BY	CHECKED
DESIGN	E. Dahl	B. Karnes
DETAILS	R. Ramirez	B. Karnes
QUANTITIES	R. Kotey	J. Cruz

PREPARED FOR THE COUNTY OF SAN LUIS OBISPO DEPARTMENT OF PUBLIC WORKS

Greg R. Young — PROJECT ENGINEER

BRIDGE NO. 49C0459 — POST MILE X

TAR SPRING CREEK BRIDGE
GIRDER LAYOUT

DESIGN DETAIL SHEET (ENGLISH) (REV.7/16/10)

ORIGINAL SCALE IN INCHES FOR REDUCED PLANS 0 1 2 3

FEDERAL ID #: BRLO-5949(116) CONTRACT NO.: 300385

DISREGARD PRINTS BEARING EARLIER REVISION DATES 12/19/14 2/10/15

SHEET BR7 OF BR15

FILE => S:\Client\SLO-County\S13-910 Branch Mill Rd\CAD\S13910a-1-g_1o01.dgn

USERNAME => bobm DATE PLOTTED => 2/10/2015 TIME PLOTTED => 11:05:17 AM

DIST	COUNTY	PROJECT	SHEET No	TOTAL SHEETS
05	SLO	TAR SPRING CREEK BRIDGE ON BRANCH MILL ROAD	23	30

REGISTERED CIVIL ENGINEER — DATE 12/19/14

PLANS APPROVAL DATE

REGISTERED PROFESSIONAL ENGINEER — Danny J. Mossman No. C70850 CIVIL STATE OF CALIFORNIA

The County or its officers or agents shall not be responsible for the accuracy or completeness of electronic copies of this plan sheet.

QUINCY ENGINEERING, INC
11017 Cobblerock Drive, Suite 100
Rancho Cordova, CA 95670

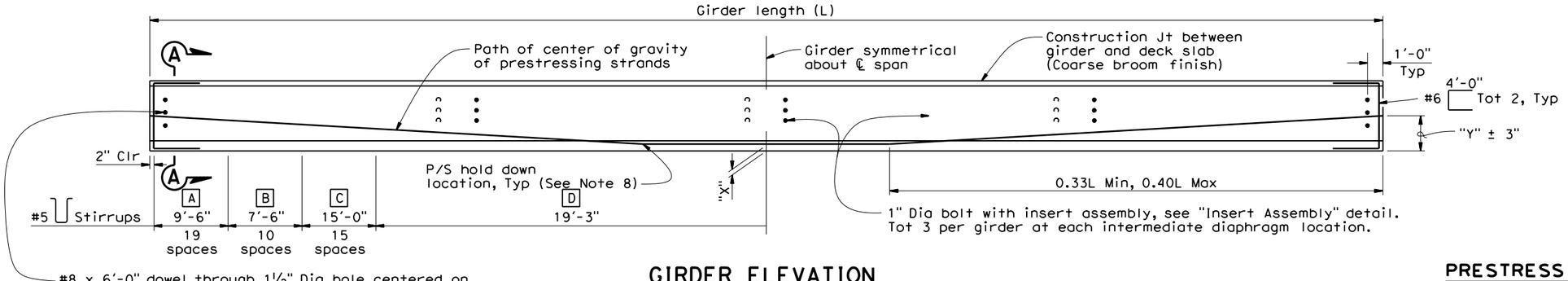

GIRDER ELEVATION

Note:
Girder ends to be cast such that a level surface is provided at bearing pads

LOCATION	A	B	C	D
EXTERIOR	#5 @ 6"	#5 @ 9"	#5 @ 12"	#5 @ 15"
INTERIOR	#5 @ 6"	#5 @ 9"	#5 @ 12"	#5 @ 15"

LOCATION	GIRDER LENGTH (L)	GIRDER DEPTH (D)	"X" (in)	JACKING FORCE (P) (kips)	As, Min (in²)	"Y" (in)	CONCRETE STRENGTH (ksi) f'ci	CONCRETE STRENGTH (ksi) f'c	MIDSPAN DEAD LOAD DEFLECTION (in) DECK	MIDSPAN DEAD LOAD DEFLECTION (in) RAIL
EXTERIOR	102'-6"	4'-7⅛"	4	1600	8.03	19	5.5	6	2.75	0.44
			6	1670	8.25					
INTERIOR	102'-6"	4'-7⅛"	4	1580	7.81	19	5.5	6	2.75	0.44
			6	1660	8.25					

PRESTRESSING NOTES

1. The Jacking Force (P) is the jacking force required at the point of control along the span. The jacking force does not include any fabrication specific losses
2. The maximum tensile stress in the prestressing steel upon release shall not exceed 75% of thespecified minimum ultimate tensile strength of the prestressing steel
3. The maximum temporary tensile stress (jacking stress) in the prestressing steel shall not exceed 80% of the specified minimum ultimate tensile strength of the prestressing steel
4. Concrete strength:
   f'ci is at time of initial stressing
   f'c is at 28 days
5. Deflection components are informational and will be used to set screed line elevations
6. Screed line elevations for deck concrete will be determined by the Engineer
7. Contractor may interpolate "P" and "X" values between the limits shown, as approved by the Engineer
8. There shall be a minimum of two hold downs per girder for the prestressing
9. Prestressing strand shall be 270 ksi low relaxation
10. As, Min is the minimum area required of prestressing steel

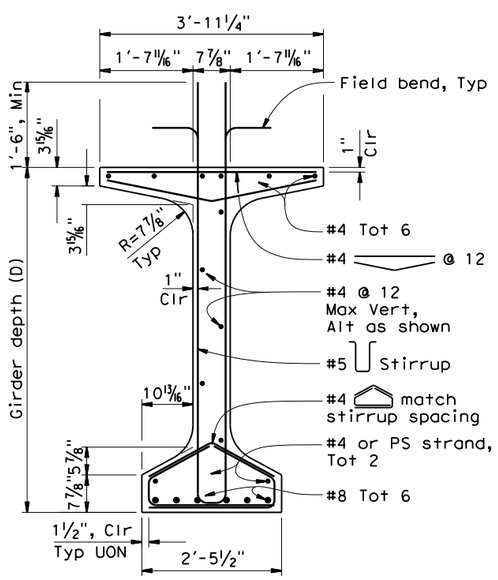

TYPICAL GIRDER SECTION

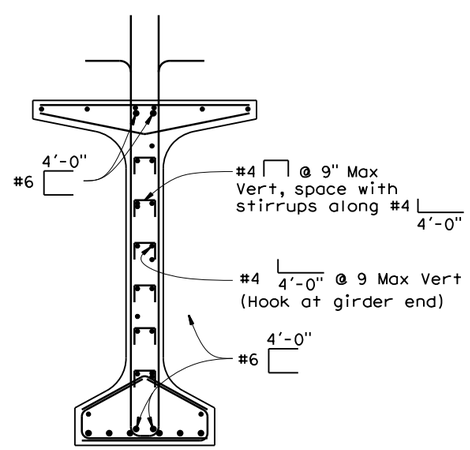

Note:
For details not shown, see "Typical Girder Section"

SECTION A-A

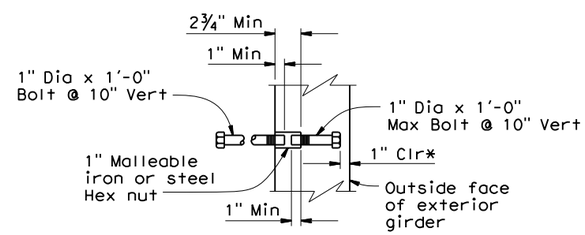

* Dimension may be increased at end block

INSERT ASSEMBLY

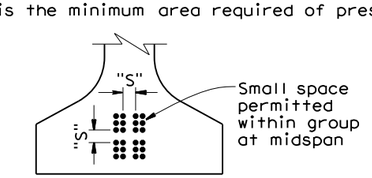

CLEARANCES FOR PRETENSIONED STRANDS

NO SCALE

Notes:

1. Strands may be bundled in groups consisting of 3 vertically, 2 horizontally, and separated at the ends
2. The minimum distance "S" between groups or individual strands is 1¾" for 0.5" Dia strand and 2" for 0.6" Dia strand
3. "S" is measured between centers of adjacent strands
4. Strands in conflict with 1½" holes shall be relocated
5. Approval by Engineer is required for deviation

Note: For "Welded Wire Reinforcement (WWR) Alternative", see "PC/PS Bulb-Tee Girder (Miscellaneous Details)" sheet

	BY	CHECKED
DESIGN	E. Dahl	B. Karnes
DETAILS	R. Ramirez	B. Karnes
QUANTITIES	R. Kotey	J. Cruz

PREPARED FOR THE COUNTY OF SAN LUIS OBISPO DEPARTMENT OF PUBLIC WORKS

Greg R. Young
PROJECT ENGINEER

BRIDGE NO. 49C0459
POST MILE X

TAR SPRING CREEK BRIDGE
PC/PS BULB-TEE GIRDER (HARPED STRANDS)

DESIGN DETAIL SHEET (ENGLISH) (REV.7/16/10)

ORIGINAL SCALE IN INCHES FOR REDUCED PLANS 0 1 2 3

FEDERAL ID #: BRLO-5949(116) CONTRACT NO.: 300385

DISREGARD PRINTS BEARING EARLIER REVISION DATES 12/19/14

SHEET BR8 OF BR15

FILE => S:\Client\SLO-County\S13-910 Branch Mill Rd\CAD\S13910a-1-gdt01.dgn

USERNAME => bobm DATE PLOTTED => 2/10/2015 TIME PLOTTED => 11:05:18 AM

DIST	COUNTY	PROJECT	SHEET No	TOTAL SHEETS
05	SLO	TAR SPRING CREEK BRIDGE ON BRANCH MILL ROAD	24	30

REGISTERED CIVIL ENGINEER — DATE 12/19/14

PLANS APPROVAL DATE

REGISTERED PROFESSIONAL ENGINEER — Danny J. Mossman — No. C70850 — CIVIL — STATE OF CALIFORNIA

The County or its officers or agents shall not be responsible for the accuracy or completeness of electronic copies of this plan sheet.

QUINCY ENGINEERING, INC
11017 Cobblerock Drive, Suite 100
Rancho Cordova, CA 95670

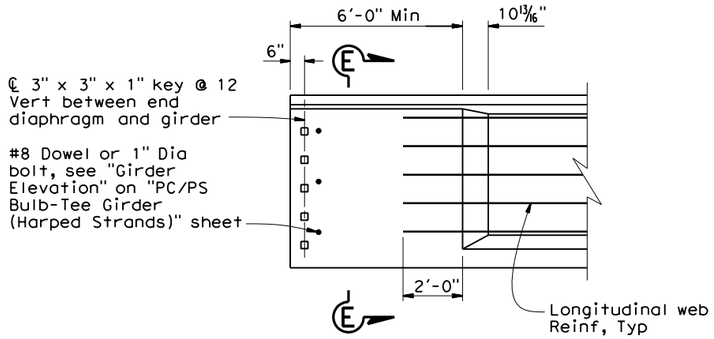

OPTIONAL END BLOCK - ELEVATION

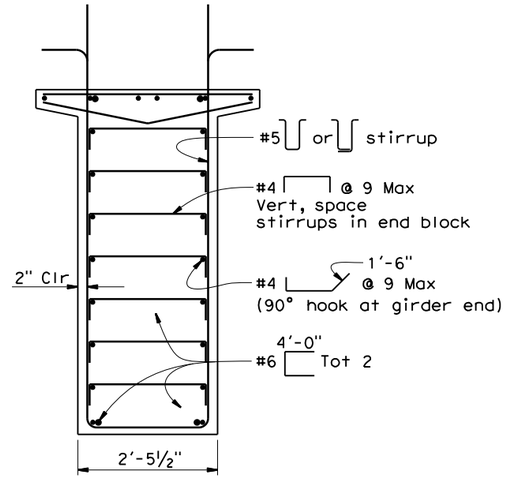

Note:
For details not shown, see "PC/PS Bulb-Tee Girder (Harped Strands)" detail

SECTION E-E

Note:
For "Girder Elevation" and "Typical Girder Section", see "PC/PS Bulb-Tee Girder (Harped Strands)" sheet

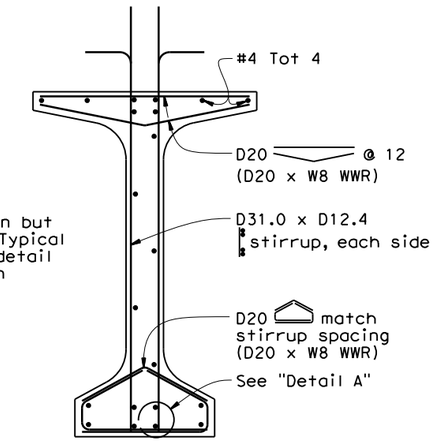

Notes:
1. For details shown but not noted, see "Typical Girder Section" detail
2. W8 WWR not shown

WELDED WIRE REINFORCEMENT (WWR) ALTERNATIVE

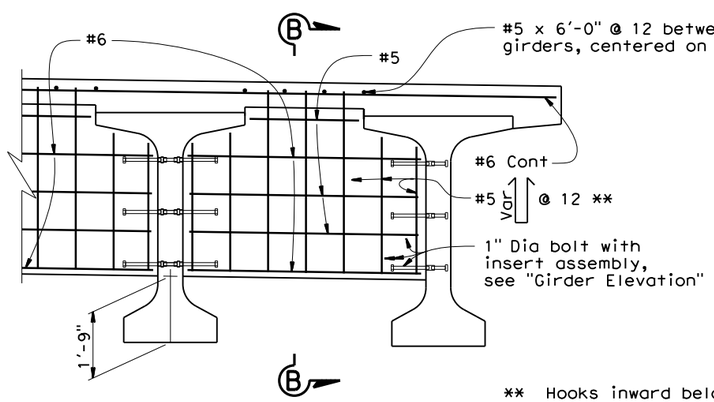

** Hooks inward below girder top flange

INTERMEDIATE DIAPHRAGM

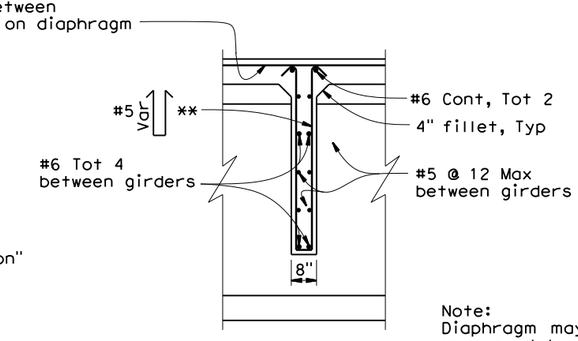

Note:
Diaphragm may be vertical or normal to deck grade

SECTION B-B

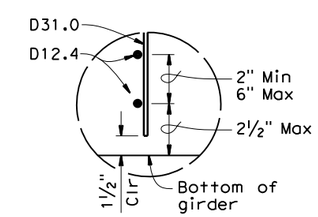

DETAIL A

Notes:
1. Bottom of stirrup WWR detail shown, top similar
2. Longitudinal wire area shall be 40% or greater of vertical deformed wire's area

NO SCALE

	BY	CHECKED
DESIGN	E. Dahl	B. Karnes
DETAILS	R. Ramirez	B. Karnes
QUANTITIES	R. Kotey	J. Cruz

PREPARED FOR THE COUNTY OF SAN LUIS OBISPO DEPARTMENT OF PUBLIC WORKS

Greg R. Young — PROJECT ENGINEER

BRIDGE NO. 49C0459 — POST MILE X

TAR SPRING CREEK BRIDGE
PC/PS BULB-TEE GIRDER (MISCELLANEOUS DETAILS)

DESIGN DETAIL SHEET (ENGLISH) (REV.7/16/10)

ORIGINAL SCALE IN INCHES FOR REDUCED PLANS 0 1 2 3

FEDERAL ID #: BRLO-5949(116) CONTRACT NO.: 300385

DISREGARD PRINTS BEARING EARLIER REVISION DATES → REVISION DATES 12/19/14 — SHEET BR9 OF BR15

FILE => S:\Client\SLO-County\S13-910 Branch Mill Rd\CAD\S13910a-1-gdt02.dgn

USERNAME => bobm DATE PLOTTED => 2/10/2015 TIME PLOTTED => 11:05:19 AM

DIST	COUNTY	PROJECT	SHEET No	TOTAL SHEETS
05	SLO	TAR SPRING CREEK BRIDGE ON BRANCH MILL ROAD	25	30

REGISTERED CIVIL ENGINEER — DATE 12/19/14

PLANS APPROVAL DATE

REGISTERED PROFESSIONAL ENGINEER — Danny J. Mossman No. C70850 CIVIL STATE OF CALIFORNIA

The County or its officers or agents shall not be responsible for the accuracy or completeness of electronic copies of this plan sheet.

QUINCY ENGINEERING, INC
11017 Cobblerock Drive, Suite 100
Rancho Cordova, CA 95670

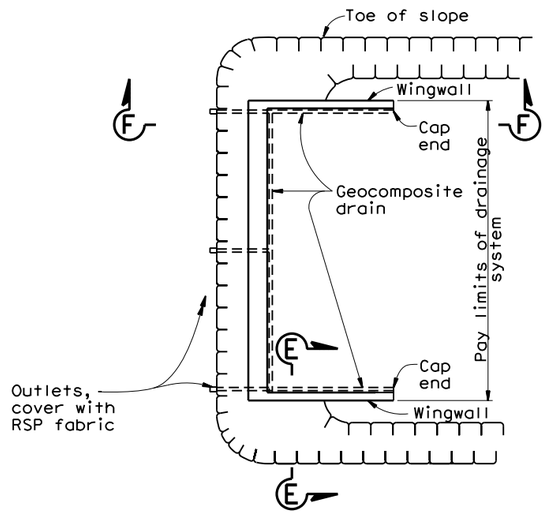

TYPICAL PLAN

1"=10'

* For pipe layout at staggered end, see "Detail B"

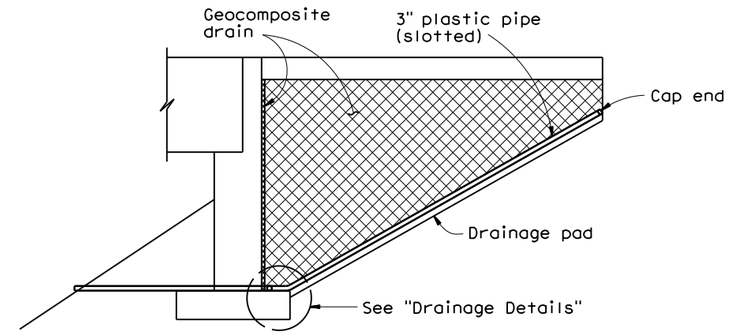

CANTILEVER WINGWALL

SECTION F-F

1/4"=1'-0"

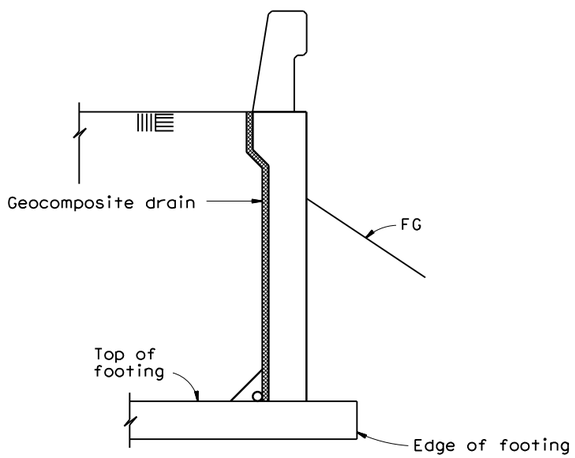

SECTION E-E

1/2"=1'-0"

Note: Bends and junctions in 3" plastic pipe are 30" radius minimum

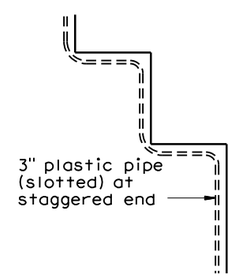

DETAIL B

No Scale

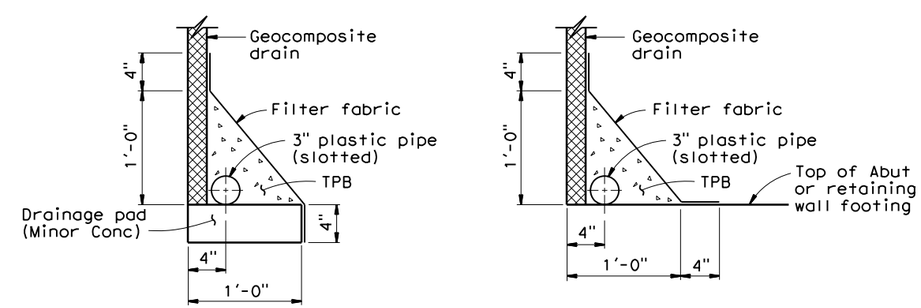

WITHOUT FOOTING

WITH FOOTING

DRAINAGE DETAILS

1 1/2"=1'-0"

DESIGN	BY E. Dahl	CHECKED B. Karnes	
DETAILS	BY R. Ramirez	CHECKED B. Karnes	
QUANTITIES	BY R. Kotey	CHECKED J. Cruz	

PREPARED FOR THE COUNTY OF SAN LUIS OBISPO DEPARTMENT OF PUBLIC WORKS

Greg R. Young
PROJECT ENGINEER

BRIDGE NO. 49C0459
POST MILE X

TAR SPRING CREEK BRIDGE

STRUCTURE DRAINAGE DETAILS

DESIGN DETAIL SHEET (ENGLISH) (REV.7/16/10)

ORIGINAL SCALE IN INCHES FOR REDUCED PLANS 0 1 2 3

FEDERAL ID #: BRLO-5949(116) CONTRACT NO.: 300385

DISREGARD PRINTS BEARING EARLIER REVISION DATES 12/19/14

REVISION DATES

SHEET BR10 OF BR15

FILE => S:\Client\SLO-County\S13-910 Branch Mill Rd\CAD\S13910a-s-sadd01.dgn

USERNAME => bobm DATE PLOTTED => 2/10/2015 TIME PLOTTED => 11:05:20 AM

DIST	COUNTY	PROJECT	SHEET No	TOTAL SHEETS
05	SLO	TAR SPRING CREEK BRIDGE ON BRANCH MILL ROAD	26	30

REGISTERED CIVIL ENGINEER — DATE 12/19/14

PLANS APPROVAL DATE

REGISTERED PROFESSIONAL ENGINEER — Danny J. Mossman No. C70850 CIVIL — STATE OF CALIFORNIA

The County or its officers or agents shall not be responsible for the accuracy or completeness of electronic copies of this plan sheet.

QUINCY ENGINEERING, INC
11017 Cobblerock Drive, Suite 100
Rancho Cordova, CA 95670

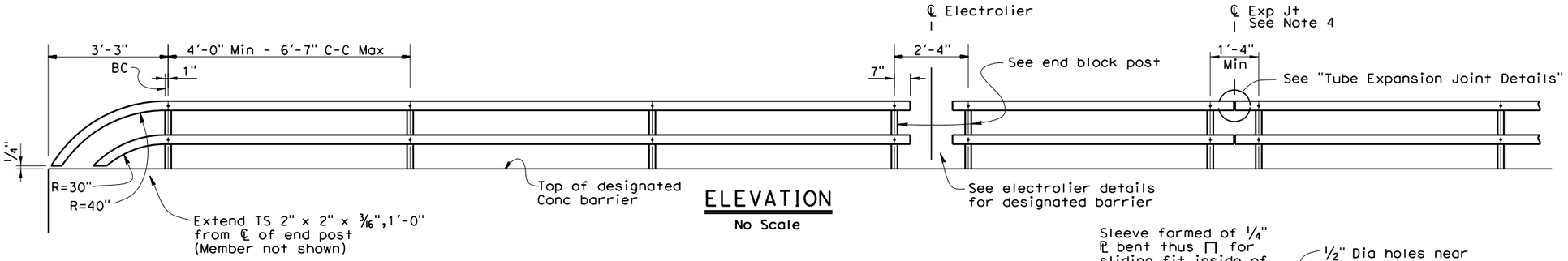

ELEVATION
No Scale

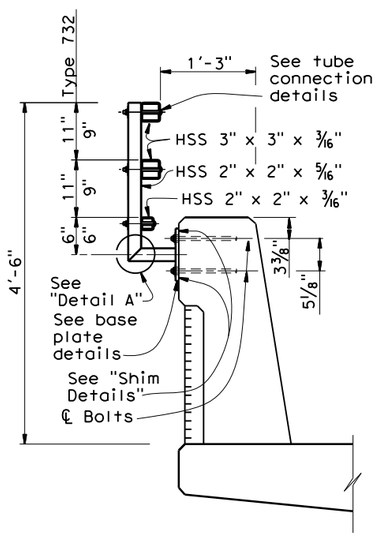

TYPE 732 OR 732A (B11-55)
1"=1'-0"

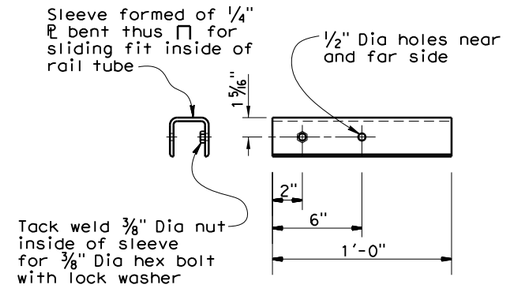

SLEEVE DETAIL
No Scale

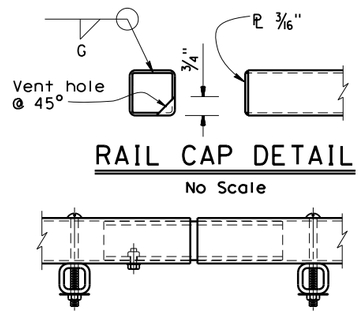

RAIL CAP DETAIL
No Scale

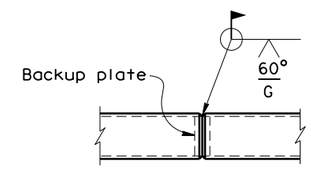

WELDED SPLICE DETAIL
No Scale

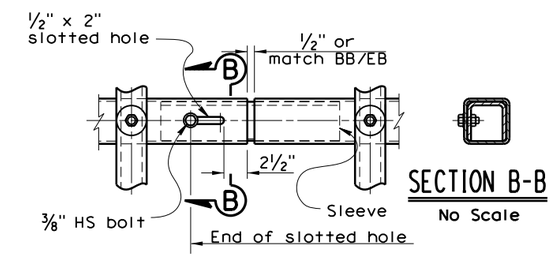

SECTION B-B
No Scale

TUBE EXPANSION JOINT DETAILS
No Scale

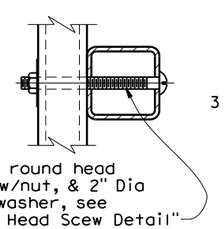

TUBE CONNECTION DETAIL
No Scale

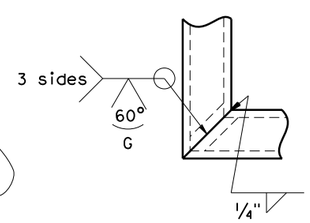

DETAIL A
No Scale

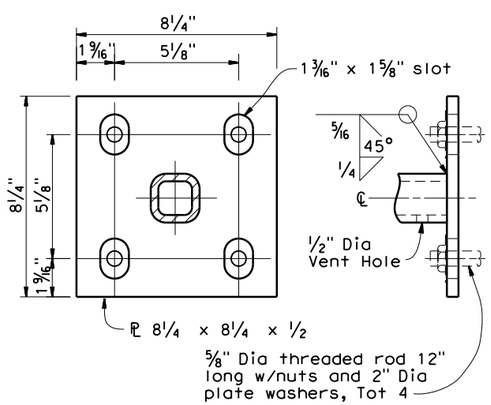

BASE PLATE DETAIL
No Scale

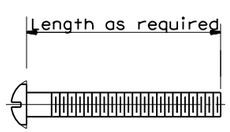

ROUND HEAD SCREW DETAIL
No Scale

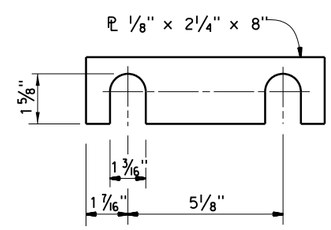

SHIM DETAILS
No Scale

Notes:

1. Post shall be normal to railing.
2. Rail tubes shall be shop bent or fabricated to fit horizontal curve when radius is less than 12".
3. Tube splices shall be located in the tubes spanning deck or wall joints. Increase joint width in tubes to match expansion joint width and increase sleeve length correspondingly.
4. Top rail tube shall be continuous over not less than two posts except a short post spacing is permitted near deck or wall joints, electroliers, or other rail discontinuities as noted.
5. See Project Plans for limits of tubular hand railing.

	BY	CHECKED
DESIGN	E. Dahl	B. Karnes
DETAILS	R. Ramirez	B. Karnes
QUANTITIES	R. Kotey	J. Cruz

PREPARED FOR THE COUNTY OF SAN LUIS OBISPO DEPARTMENT OF PUBLIC WORKS

Greg R. Young
PROJECT ENGINEER

BRIDGE NO. 49C0459
POST MILE X

TAR SPRING CREEK BRIDGE
TAR SPRING CREEK BRIDGE
TUBULAR BICYCLE RAILING DETAILS

DESIGN DETAIL SHEET (ENGLISH) (REV.7/16/10)

ORIGINAL SCALE IN INCHES FOR REDUCED PLANS 0 1 2 3

FEDERAL ID #: BRLO-5949(116) CONTRACT NO.: 300385

DISREGARD PRINTS BEARING EARLIER REVISION DATES — REVISION DATES 12/19/14 2/10/15 — SHEET BR11 OF BR15

FILE => S:\Client\SLO-County\S13-910 Branch Mill Rd\CAD\S13910a-t-brdt.dgn

USERNAME => bobsm DATE PLOTTED => 2/10/2015 TIME PLOTTED => 11:05:21 AM

DIST	COUNTY	ROUTE	POST MILES TOTAL PROJECT	SHEET No	TOTAL SHEETS
05	SLO	Branch Mill	----------	27	30

GEOTECHNICAL PROFESSIONAL — DATE 12-19-14

PLANS APPROVAL DATE

The State of California or its officers or agents shall not be responsible for the accuracy or completeness of electronic copies of this plan sheet.

REGISTERED PROFESSIONAL ENGINEER — L. Berry — No. 73221 — Exp. 12-31-16 — CIVIL — STATE OF CALIFORNIA

Fugro Consultants, Inc.
660 Clarion Court, Suite A
San Luis Obispo, CA 93041

QUINCY ENGINEERING, INC
11017 Cobblerock Drive, Suite 100
Rancho Cordova, CA 95670

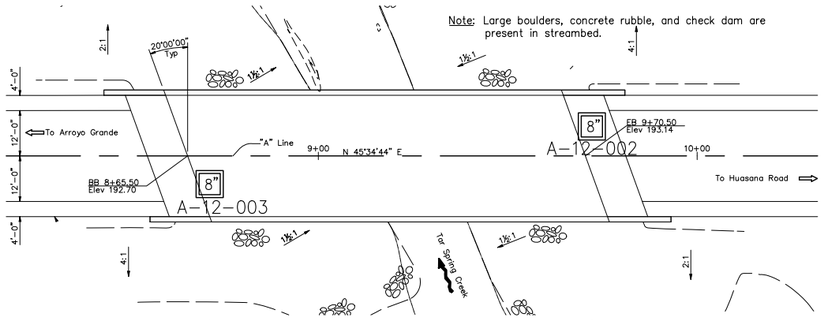

PLAN

Plan Scale: 1" = 20'

BENCH MARK DATA							
No.	NORTHING	EASTING	ELEVATION	LINE	STATION	OFFSET	DESCRIPTION
3	12764229.76	2375206.21	191.82	"A"	13+55.29	0.35' Lt	MAG NAIL AND TIN
4	12763973.13	2375018.6	190.04	"A"	10+33.62	11.49' Lt	MAG NAIL AND TIN
5	12763743.34	2374837.69	190.37	"A"	7+50.21	32.32' Rt	MAG NAIL AND TIN
6	12763796.77	2374635.55	183.29	"A"	5+39.62	48.92' Lt	REBAR

Horizontal Reference: UTM with NAD83 datum Zone 10, US Foot
Vertical Reference: NGVD 29 DATUM

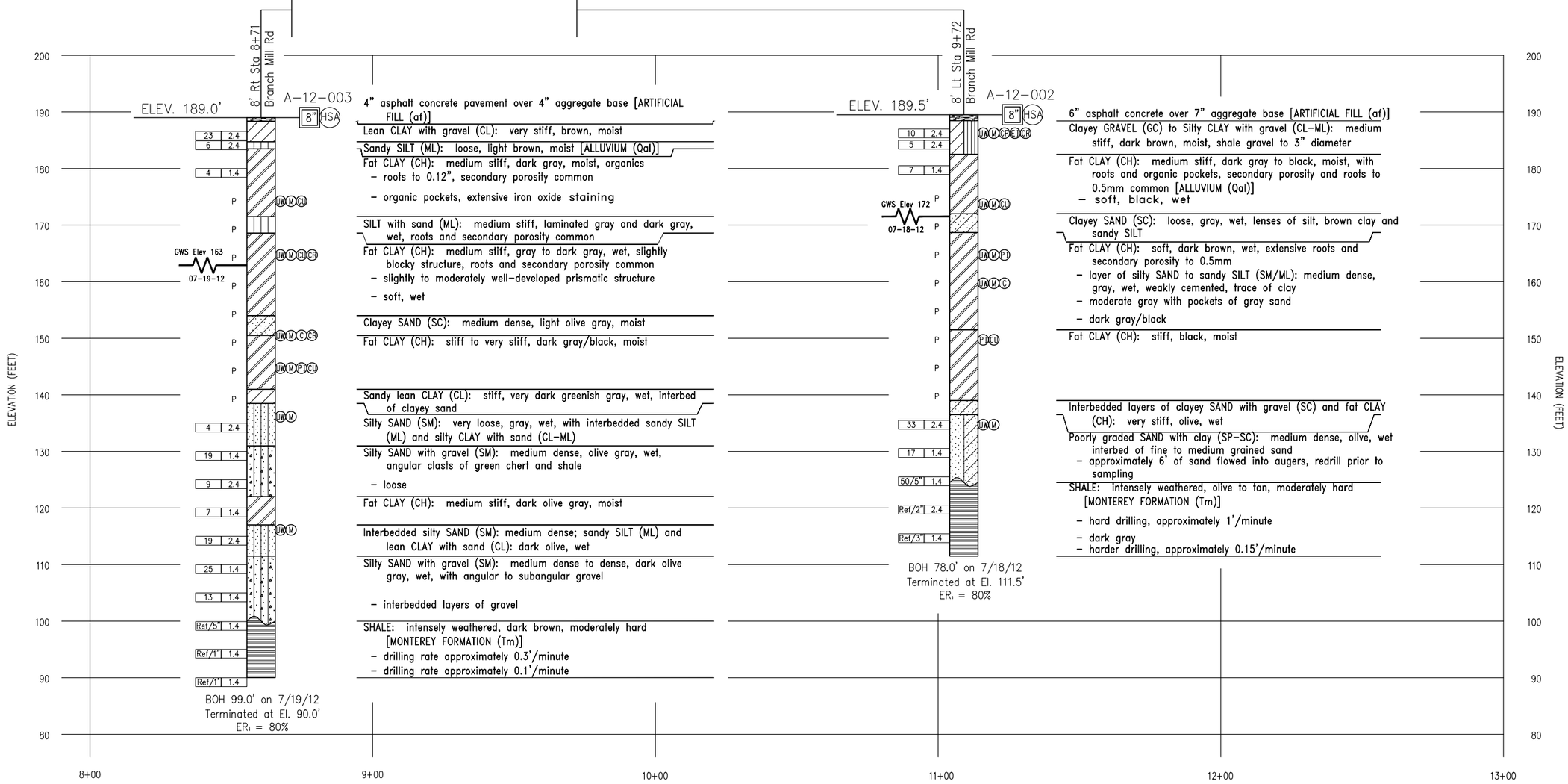

NOTES:

1. Auger borings excavated with a CME-85 drill rig equipped with 8 in. hollow stem augers and an automatic trip hammer weighing 140 pounds falling 30 inches.
2. Standard Penetration Test Samples I.D.=1-3/8 in., O.D.=2 in., without liners.
3. "2.4" sampler has a 2-3/8 in. inside diameter and a 3 in. outside diameter (Modified Calif. Sampler) with brass liners.
4. "Ref/2" Drive exceeded 50 blows during initial 6 in scaling.
5. "90/11" Partial drive having number of blows over depth interval noted.
6. "P" – Push samples were taken using a 3-inch thin walled (Shelby) tube sampler with a 1/16" inch wall thickness.
7. All blow counts shown are uncorrected field values.
8. BOH = Bottom of Hole.
9. This LOTB was prepared in accordance with the Caltrans Soil & Rock Logging, Classification and Presentation Manual (2010).

PROFILE

Profile Scale: Horizontal 1' = 20'
Vertical 1' = 10'

ENGINEERING SERVICES		GEOTECHNICAL SERVICES
FUNCTIONAL SUPERVISOR	DRAWN BY: B. Egan	FIELD INVESTIGATION BY:
NAME: G. Denlinger	CHECKED BY: L. Berry	C. Lovato

PREPARED FOR THE COUNTY OF SAN LUIS OBISPO DEPARTMENT OF PUBLIC WORKS

XXXX
PROJECT ENGINEER

BRIDGE NO. 49C-0459
POST MILES XX

TAR SPRING CREEK BRIDGE

LOG OF TEST BORINGS

1 of 4

OGS CIVIL LOG OF TEST BORINGS SHEET

ORIGINAL SCALE IN INCHES FOR REDUCED PLANS 0 1 2 3

CU -----
EA ------

DISREGARD PRINTS BEARING EARLIER REVISION DATES

REVISION DATES: 01-09-13 09-05-14 12-19-14

SHEET BR12 OF BR15

FILE =) 04.61110010 LOTB.dwg

USERNAME =>began DATE PLOTTED =>12-16-2014 TIME PLOTTED =>11:08am

REFERENCE: CALTRANS SOIL & ROCK LOGGING, CLASSIFICATION, AND PRESENTATION MANUAL (2010)

DIST	COUNTY	ROUTE	POST MILES TOTAL PROJECT	SHEET No	TOTAL SHEETS
05	SLO	Branch Mill	_____	28	30

GEOTECHNICAL PROFESSIONAL 12-19-14 DATE

_____ PLANS APPROVAL DATE

REGISTERED PROFESSIONAL ENGINEER L. Berry No. 73221 Exp. 12-31-16 CIVIL STATE OF CALIFORNIA

The State of California or its officers or agents shall not be responsible for the accuracy or completeness of electronic copies of this plan sheet.

Fugro Consultants, Inc.
660 Clarion Court, Suite A
San Luis Obispo, CA 93041

QUINCY ENGINEERING, INC
11017 Cobblerock Drive, Suite 100
Rancho Cordova, CA 95670

CEMENTATION

Description	Criteria
Weak	Crumbles or breaks with handling or little finger pressure.
Moderate	Crumbles or breaks with considerable finger pressure.
Strong	Will not crumble or break with finger pressure.

BOREHOLE IDENTIFICATION

Symbol	Hole Type	Description
Size	A	Auger Boring (hollow or solid stem bucket)
Size	R RW RC P	Rotary drilled boring (conventional) Rotary drilled with self-casing wire-line Rotary core with continuously-sampled, self-casing wire-line Rotary percussion boring (air)
Size	R	Rotary drilled diamond core
Size	HD HA	Hand driven (1-inch soil tube) Hand Auger
◉	D	Dynamic Cone Penetration Boring
▲	CPT	Cone Penetration Test (ASTM D 5778)
□	O	Other (note on LOTB)

Note: Size in inches.

CONSISTENCY OF COHESIVE SOILS

Description	Shear Strength (tsf)	Pocket Penetrometer Measurement, PP, (tsf)	Torvane Measurement, TV, (tsf)	Vane Shear Measurement, VS, (tsf)
Very Soft	Less than 0.12	Less than 0.25	Less than 0.12	Less than 0.12
Soft	0.12 - 0.25	0.25 - 0.5	0.12 - 0.25	0.12 - 0.25
Medium Stiff	0.25 - 0.5	0.5 - 1	0.25 - 0.5	0.25 - 0.5
Stiff	0.5 - 1	1 - 2	0.5 - 1	0.5 - 1
Very Stiff	1 - 2	2 - 4	1 - 2	1 - 2
Hard	Greater than 2	Greater than 4	Greater than 2	Greater than 2

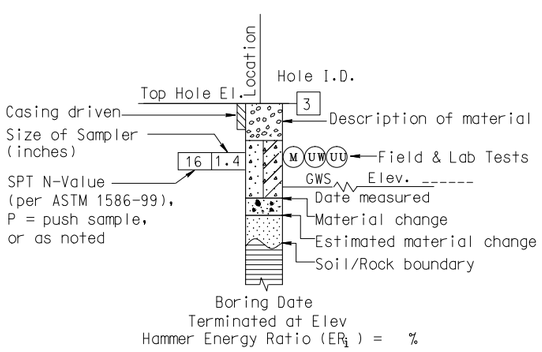

ROTARY BORING

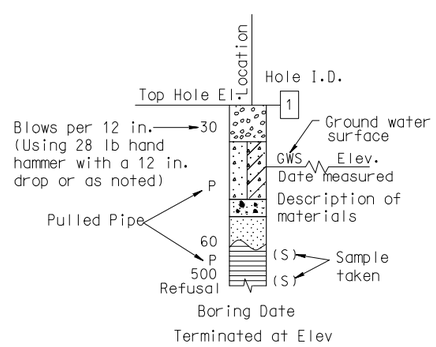

HAND BORING

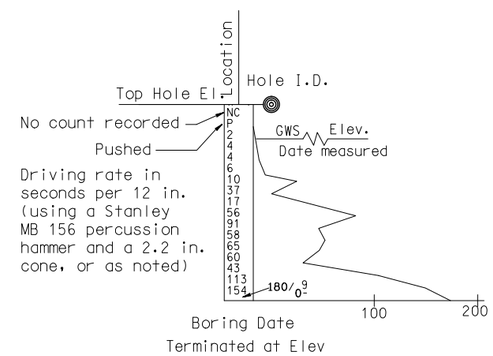

DYNAMIC CONE PENETRATION BORING

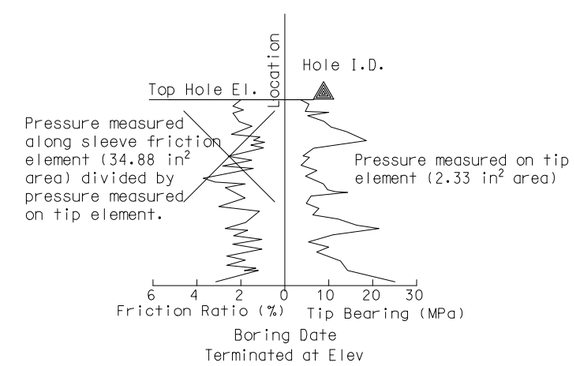

CONE PENETRATION TEST (CPT) BORING

ENGINEERING SERVICES	GEOTECHNICAL SERVICES	PREPARED FOR THE COUNTY OF SAN LUIS OBISPO DEPARTMENT OF PUBLIC WORKS	XXXX PROJECT ENGINEER	BRIDGE NO. 49C-0459	TAR SPRING CREEK BRIDGE
FUNCTIONAL SUPERVISOR: NAME: G. Denlinger	DRAWN BY: B. Egan CHECKED BY: L. Berry	FIELD INVESTIGATION BY: C. Lovato		POST MILE XX	LOG OF TEST BORINGS 2 of 4

GS LOTB SOIL LEGEND

ORIGINAL SCALE IN INCHES FOR REDUCED PLANS 0 1 2 3

CU EA

DISREGARD PRINTS BEARING EARLIER REVISION DATES → REVISION DATES 01-09-13 09-05-14 12-19-14

SHEET BR13 OF BR15

FILE -> 04.61110010 LOTB.dwg

DATE PLOTTED -> 12-16-2014 TIME PLOTTED -11:08am USERNAME -> began

REFERENCE: CALTRANS SOIL & ROCK LOGGING, CLASSIFICATION, AND PRESENTATION MANUAL (2010)

GROUP SYMBOLS AND NAMES

Graphic/Symbol	Group Names	Graphic/Symbol	Group Names
GW	Well-graded GRAVEL Well-graded GRAVEL with SAND	CL	Lean CLAY Lean CLAY with SAND Lean CLAY with GRAVEL SANDY lean CLAY SANDY lean CLAY with GRAVEL GRAVELLY lean CLAY GRAVELLY lean CLAY with SAND
GP	Poorly-graded GRAVEL Poorly-graded GRAVEL with SAND		
GW-GM	Well-graded GRAVEL with SILT Well-graded GRAVEL with SILT and SAND	CL-ML	SILTY CLAY SILTY CLAY with SAND SILTY CLAY with GRAVEL SANDY SILTY CLAY SANDY SILTY CLAY with GRAVEL GRAVELLY SILTY CLAY GRAVELLY SILTY CLAY with SAND
GW-GC	Well-graded GRAVEL with CLAY (or SILTY CLAY) Well-graded GRAVEL with CLAY and SAND (or SILTY CLAY and SAND)		
GP-GM	Poorly-graded GRAVEL with SILT Poorly-graded GRAVEL with SILT and SAND	ML	SILT SILT with SAND SILT with GRAVEL SANDY SILT SANDY SILT with GRAVEL GRAVELLY SILT GRAVELLY SILT with SAND
GP-GC	Poorly-graded GRAVEL with CLAY (or SILTY CLAY) Poorly-graded GRAVEL with CLAY and SAND (or SILTY CLAY and SAND)		
GM	SILTY GRAVEL SILTY GRAVEL with SAND	OL	ORGANIC lean CLAY ORGANIC lean CLAY with SAND ORGANIC lean CLAY with GRAVEL SANDY ORGANIC lean CLAY SANDY ORGANIC lean CLAY with GRAVEL GRAVELLY ORGANIC lean CLAY GRAVELLY ORGANIC lean CLAY with SAND
GC	CLAYEY GRAVEL CLAYEY GRAVEL with SAND		
GC-GM	SILTY, CLAYEY GRAVEL SILTY, CLAYEY GRAVEL with SAND	OL	ORGANIC SILT ORGANIC SILT with SAND ORGANIC SILT with GRAVEL SANDY ORGANIC SILT SANDY ORGANIC SILT with GRAVEL GRAVELLY ORGANIC SILT GRAVELLY ORGANIC SILT with SAND
SW	Well-graded SAND Well-graded SAND with GRAVEL		
SP	Poorly-graded SAND Poorly-graded SAND with GRAVEL	CH	Fat CLAY Fat CLAY with SAND Fat CLAY with GRAVEL SANDY fat CLAY SANDY fat CLAY with GRAVEL GRAVELLY fat CLAY GRAVELLY fat CLAY with SAND
SW-SM	Well-graded SAND with SILT Well-graded SAND with SILT and GRAVEL		
SW-SC	Well-graded SAND with CLAY (or SILTY CLAY) Well-graded SAND with CLAY and GRAVEL (or SILTY CLAY and GRAVEL)	MH	Elastic SILT Elastic SILT with SAND Elastic SILT with GRAVEL SANDY elastic SILT SANDY elastic SILT with GRAVEL GRAVELLY elastic SILT GRAVELLY elastic SILT with SAND
SP-SM	Poorly-graded SAND with SILT Poorly-graded SAND with SILT and GRAVEL		
SP-SC	Poorly-graded SAND with CLAY (or SILTY CLAY) Poorly-graded SAND with CLAY and GRAVEL (or SILTY CLAY and GRAVEL)	OH	ORGANIC fat CLAY ORGANIC fat CLAY with SAND ORGANIC fat CLAY with GRAVEL SANDY ORGANIC fat CLAY SANDY ORGANIC fat CLAY with GRAVEL GRAVELLY ORGANIC fat CLAY GRAVELLY ORGANIC fat CLAY with SAND
SM	SILTY SAND SILTY SAND with GRAVEL		
SC	CLAYEY SAND CLAYEY SAND with GRAVEL	OH	ORGANIC elastic SILT ORGANIC elastic SILT with SAND ORGANIC elastic SILT with GRAVEL SANDY ORGANIC elastic SILT SANDY ORGANIC elastic SILT with GRAVEL GRAVELLY ORGANIC elastic SILT GRAVELLY ORGANIC elastic SILT with SAND
SC-SM	SILTY, CLAYEY SAND SILTY, CLAYEY SAND with GRAVEL		
PT	PEAT	OL/OH	ORGANIC SOIL ORGANIC SOIL with SAND ORGANIC SOIL with GRAVEL SANDY ORGANIC SOIL SANDY ORGANIC SOIL with GRAVEL GRAVELLY ORGANIC SOIL GRAVELLY ORGANIC SOIL with SAND
	COBBLES COBBLES and BOULDERS BOULDERS		

FIELD AND LABORATORY TESTING

- (C) Consolidation (ASTM D 2435)
- (CL) Collapse Potential (ASTM D 5333)
- (CP) Compaction Curve (CTM 216)
- (CR) Corrosivity Testing (CTM 643, CTM 422, CTM 417)
- (CU) Consolidated Undrained Triaxial (ASTM D 4767)
- (DS) Direct Shear (ASTM D 3080)
- (EI) Expansion Index (ASTM D 4829)
- (M) Moisture Content (ASTM D 2216)
- (OC) Organic Content-% (ASTM D 2974)
- (P) Permeability (CTM 220)
- (PA) Particle Size Analysis (ASTM D 422)
- (PI) Plasticity Index (AASHTO T 90) Liquid Limit (AASHTO T 89)
- (PL) Point Load Index (ASTM D 5731)
- (PM) Pressure Meter
- (R) R-Value (CTM 301)
- (SE) Sand Equivalent (CTM 217)
- (SG) Specific Gravity (AASHTO T 100)
- (SL) Shrinkage Limit (ASTM D 427)
- (SW) Swell Potential (ASTM D 4546)
- (UC) Unconfined Compression-Soil (ASTM D 2166) Unconfined Compression-Rock (ASTM D 2938)
- (UU) Unconsolidated Undrained Triaxial (ASTM D 2850)
- (UW) Unit Weight (ASTM D 4767)

DIST	COUNTY	ROUTE	POST MILES TOTAL PROJECT	SHEET No	TOTAL SHEETS
05	SLO	Branch Mill	----------	29	30

GEOTECHNICAL PROFESSIONAL — DATE 12-19-14

REGISTERED PROFESSIONAL ENGINEER — L. Berry No. 73221 Exp. 12-31-16 CIVIL — STATE OF CALIFORNIA

PLANS APPROVAL DATE

The State of California or its officers or agents shall not be responsible for the accuracy or completeness of electronic copies of this plan sheet.

Fugro Consultants, Inc.
660 Clarion Court, Suite A
San Luis Obispo, CA 93041

QUINCY ENGINEERING, INC
11017 Cobblerock Drive, Suite 100
Rancho Cordova, CA 95670

APPARENT DENSITY OF COHESIONLESS SOILS

Description	SPT N (Blows / 12 in.)
Very Loose	0 - 5
Loose	5 - 10
Medium Dense	10 - 30
Dense	30 - 50
Very Dense	Greater than 50

MOISTURE

Description	Criteria
Dry	No discernable moisture
Moist	Moisture present, but no free water
Wet	Visible free water

PERCENT OR PROPORTION OF SOILS

Description	Criteria
Trace	Particles are present but estimated to be less than 5%
Few	5% - 10%
Little	15% - 25%
Some	30% - 45%
Mostly	50% - 100%

PARTICLE SIZE

Description		Size (in.)
Boulder		Greater than 12
Cobble		3 - 12
Gravel	Coarse	3/4 - 3
	Fine	1/5 - 3/4
Sand	Coarse	1/16 - 1/5
	Medium	1/64 - 1/16
	Fine	1/300 - 1/64
Silt and Clay		Less than 1/300

ENGINEERING SERVICES — GEOTECHNICAL SERVICES

FUNCTIONAL SUPERVISOR: NAME: G. Denlinger
DRAWN BY: B. Egan
CHECKED BY: L. Berry
FIELD INVESTIGATION BY: C. Lovato

PREPARED FOR THE COUNTY OF SAN LUIS OBISPO DEPARTMENT OF PUBLIC WORKS

XXXX PROJECT ENGINEER

BRIDGE NO. 49C-0459
POST MILE XX

TAR SPRING CREEK BRIDGE
LOG OF TEST BORINGS

3 of 4

GS LOTB SOIL LEGEND

ORIGINAL SCALE IN INCHES FOR REDUCED PLANS 0 1 2 3

CU
EA

DISREGARD PRINTS BEARING EARLIER REVISION DATES

REVISION DATES: 01-09-13 09-05-14 12-19-14

SHEET BR14 OF BR15

FILE -) 04.61110010 LOTB.dwg

USERNAME -)began DATE PLOTTED -)12-16-2014 TIME PLOTTED -)11:08am

REFERENCE: CALTRANS SOIL & ROCK LOGGING, CLASSIFICATION, AND PRESENTATION MANUAL (2010)

DIST	COUNTY	ROUTE	POST MILES TOTAL PROJECT	SHEET No	TOTAL SHEETS
05	SLO	Branch Mill	_____	30	30

GEOTECHNICAL PROFESSIONAL — DATE 12-19-14

_____ PLANS APPROVAL DATE

The State of California or its officers or agents shall not be responsible for the accuracy or completeness of electronic copies of this plan sheet.

REGISTERED PROFESSIONAL ENGINEER — L. Berry — No. 73221 — Exp. 12-31-16 — CIVIL — STATE OF CALIFORNIA

Fugro Consultants, Inc.
660 Clarion Court, Suite A
San Luis Obispo, CA 93041

QUINCY ENGINEERING, INC
11017 Cobblerock Drive, Suite 100
Rancho Cordova, CA 95670

PERCENT CORE RECOVERY (REC) & ROCK QUALITY DESIGNATION (RQD)

$$REC = \frac{\sum \text{Length of the recovered core pieces (in.)}}{\text{Total length of core run (in.)}} \times 100\%$$

$$RQD = \frac{\sum \text{Length of intact core pieces} \geq 4 \text{ in.}}{\text{Total length of core run (in.)}} \times 100\%$$

RQD* Indicates soundness criteria not met.

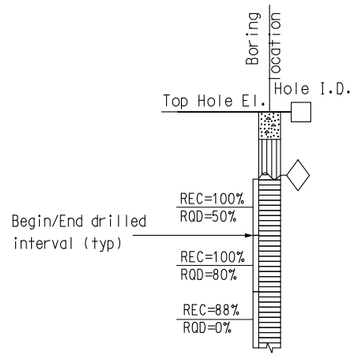

BEDDING SPACING

Description	Thickness / Spacing
Massive	Greater than 10 ft
Very Thickly Bedded	3 ft - 10 ft
Thickly Bedded	1 ft - 3 ft
Moderately Bedded	4 in. - 1 ft
Thinly Bedded	1 in. - 4 in.
Very Thinly Bedded	1/4 in. - 1 in.
Laminated	Less than 1/4 in.

LEGEND OF ROCK MATERIALS

- IGNEOUS ROCK
- SEDIMENTARY ROCK
- METAMORPHIC ROCK

ROCK HARDNESS

Description	Criteria
Extremely Hard	Cannot be scratched with a pocketknife or sharp pick. Can only be chipped with repeated heavy hammer blows.
Very Hard	Cannot be scratched with a pocketknife or sharp pick. Breaks with repeated heavy hammer blows.
Hard	Can be scratched with a pocketknife or sharp pick with difficulty (heavy pressure). Breaks with heavy hammer blows.
Moderately Hard	Can be scratched with pocketknife or sharp pick with light or moderate pressure. Breaks with moderate hammer blows.
Moderately Soft	Can be grooved 1/16 in. deep with a pocketknife or sharp pick with moderate or heavy pressure. Breaks with light hammer blow or heavy manual pressure.
Soft	Can be grooved or gouged easily by a pocketknife or sharp pick with light pressure, can be scratched with fingernail. Breaks with light to moderate manual pressure.
Very Soft	Can be readily indented, grooved or gouged with fingernail, or carved with a pocketknife. Breaks with light manual pressure.

FRACTURE DENSITY

Description	Observed Fracture Density
Unfractured	No fractures.
Very Slightly Fractured	Core lengths greater than 3 ft.
Slightly Fractured	Core lengths mostly from 1 to 3 ft.
Moderately Fractured	Core lengths mostly from 4 in. to 1 ft.
Intensely Fractured	Core lengths mostly from 1 to 4 in.
Very Intensely Fractured	Mostly chips and fragments.

WEATHERING DESCRIPTORS FOR INTACT ROCK

Description	Diagnostic Features					General Characteristics
	Chemical Weathering-Discoloration and/or Oxidation		Mechanical Weathering-Grain Boundary Conditions (Disaggregation) Primarily for Granitics and Some Coarse-Grained Sediments	Texture and Leaching		
	Body of Rock	Fracture Surfaces		Texture	Leaching	
Fresh	No discoloration, not oxidized.	No discoloration or oxidation.	No separation, intact (tight).	No change	No leaching	Hammer rings when crystalline rocks are struck.
Slightly Weathered	Discoloration or oxidation is limited to surface of, or short distance from, fractures; some feldspar crystals are dull.	Minor to complete discoloration or oxidation of most surfaces.	No visible separation, intact (tight).	Preserved	Minor leaching of some soluble minerals.	Hammer rings when crystalline rocks are struck. Body of rock not weakened.
Moderately Weathered	Discoloration or oxidation extends from fractures usually throughout; Fe-Mg minerals are "rusty," feldspar crystals are "cloudy."	All fracture surfaces are discolored or oxidized.	Partial separation of boundaries visible.	Generally preserved	Soluble minerals may be mostly leached.	Hammer does not ring when rock is struck. Body of rock is slightly weakened.
Intensely Weathered	Discoloration or oxidation throughout; all feldspars and Fe-Mg minerals are altered to clay to some extent; or chemical alteration produces in-situ disaggregation, see grain boundary conditions.	All fracture surfaces are discolored or oxidized, surfaces friable.	Partial separation, rock is friable; in semiarid conditions granitics are disaggregated.	Texture altered by chemical disintegration (hydration, argillation).	Leaching of soluble minerals may be complete.	Dull sound when struck with hammer, usually can be broken with moderate to heavy manual pressure or by light hammer blow without reference to planes of weakness such as incipient or hairline fractures, or veinlets. Rock is significantly weakened.
Decomposed	Discolored or oxidized throughout, but resistant minerals such as quartz may be unaltered; all feldspars and Fe-Mg minerals are completely altered to clay.		Complete separation of grain boundaries (disaggregated).	Resembles a soil, partial or complete remnant rock structure may be preserved; leaching of soluble minerals usually complete.		Can be granulated by hand. Resistant minerals such as quartz may be present as "stringers" or "dikes."

ENGINEERING SERVICES
FUNCTIONAL SUPERVISOR: NAME: G. Denlinger
DRAWN BY: B. Egan
CHECKED BY: L. Berry

GEOTECHNICAL SERVICES
FIELD INVESTIGATION BY: C. Lovato

PREPARED FOR THE COUNTY OF SAN LUIS OBISPO DEPARTMENT OF PUBLIC WORKS

XXXX PROJECT ENGINEER

BRIDGE NO. 49C-0459
POST MILE XX

TAR SPRING CREEK BRIDGE
LOG OF TEST BORINGS

GS LOTB ROCK LEGEND

ORIGINAL SCALE IN INCHES FOR REDUCED PLANS 0 1 2 3

CU EA

DISREGARD PRINTS BEARING EARLIER REVISION DATES

REVISION DATES: 01-09-13 09-05-14 12-19-14

SHEET BR15 OF BR15

FILE => 04.61110010 LOTB.dwg

USERNAME =>began DATE PLOTTED =>12-16-2014 TIME PLOTTED =>11:08am