COUNTY OF SAN LUIS OBISPO

DEPARTMENT OF PUBLIC WORKS AND TRANSPORTATION

CONTRACT DOCUMENTS

FOR

TAR SPRING CREEK BRIDGE ON BRANCH MILL ROAD

CONTRACT NO. 300385

FEDERAL AID PROJECT NO. BRLO-5949(116)

TABLE OF CONTENTS

NOTICE AND INSTRUCTIONS TO BIDDERS 1
- NOTICE TO BIDDERS 2
- SIGNATURES 4
- INSTRUCTIONS TO BIDDERS 6

BID FORMS 15
- BID PROPOSAL FORM 16
- BID ITEM LIST 20
- DESIGNATION OF SUBCONTRACTORS 23
- DBE COMMITMENT 24
- DBE INFORMATION – GOOD FAITH EFFORTS 26
- BIDDER'S LIST OF SUBCONTRACTORS (DBE AND NON-DBE) 29
- BIDDER'S EQUAL EMPLOYMENT OPPORTUNITY CERTIFICATION 31
- SUBCONTRACTOR'S EQUAL EMPLOYMENT OPPORTUNITY CERTIFICATION 32
- CERTIFICATION OF NON-SEGREGATED FACILITIES 33
- DECLARATION OF NONCOLLUSION 34
- DEBARMENT AND SUSPENSION CERTIFICATION 35
- PUBLIC CONTRACT CODE SECTION 10162 QUESTIONNAIRE 36
- PUBLIC CONTRACT CODE SECTION 10232 STATEMENT 37
- PUBLIC CONTRACT CODE SECTION 10285.1 STATEMENT 38
- IRAN CONTRACTING ACT CERTIFICATION 39
- NON-LOBBYING CERTIFICATION FOR FEDERAL-AID CONTRACTS 40
- DISCLOSURE OF LOBBYING ACTIVITIES 41
- BIDDER'S BOND 43

AGREEMENT 46
- AGREEMENT 47
- EXHIBIT A - BID ITEM LIST 55
- EXHIBIT B - FHWA-1273 56

BOND FORMS 66
- PERFORMANCE BOND 67
- PAYMENT BOND 70

GENERAL CONDITIONS 74
- 1 GENERAL 76
  - 1-1.01 GENERAL 76
  - 1-1.02–1-1.04 RESERVED 77
  - 1-1.05 REFERENCES 77
  - 1-1.06 ABBREVIATIONS 79
  - 1-1.07 DEFINITIONS 82
  - 1-1.08-1-1.10 RESERVED 90
  - 1-1.11 WEBSITES, ADDRESSES, AND TELEPHONE NUMBERS 91
  - 1-1.12 MISCELLANY 92

1-1.13 WRITTEN NOTICE 92
1-1.14 INDEPENDENT CONTRACTOR 92
2 RESERVED 93
3 CONTRACT AWARD AND EXECUTION 94
3-1.01 GENERAL 94
3-1.02 CONSIDERATION OF BIDS 94
3-1.03-3-1.04 RESERVED 94
3-1.05 CONTRACT BONDS 94
3-1.06 CONTRACTOR LICENSE 95
3-1.07 INSURANCE POLICIES 95
3-1.08-3.17 RESERVED 95
3-1.18 CONTRACT EXECUTION 95
4 SCOPE OF WORK 98
4-1.01 GENERAL 98
4-1.02 INTENT 98
4-1.03 WORK DESCRIPTION 98
4-1.04 USE OF MATERIALS FOUND ON THE JOB SITE 98
4-1.05 CHANGES AND EXTRA WORK 98
4-1.06 DIFFERING SITE CONDITIONS 102
4-1.07 VALUE ENGINEERING 103
4-1.08–4-1.12 RESERVED 105
4-1.13 CLEANUP 105
5 CONTROL OF WORK 106
5-1.01 GENERAL 106
5-1.02 RESERVED 106
5-1.03 ENGINEER'S AUTHORITY 106
5-1.04 COUNTY'S RIGHT TO STOP THE WORK AND CARRY OUT THE WORK 107
5-1.05 EMERGENCIES 107
5-1.06 PROTESTS 107
5-1.07–5-1.09 RESERVED 107
5-1.10–5-1.11 RESERVED 107
5-1.12 SUCCESSORS AND ASSIGNS 107
5-1.13 SUBCONTRACTING 108
5-1.14–5-1.15 RESERVED 111
5-1.16 DESIGNATED REPRESENTATIVE 111
5-1.17 CHARACTER OF WORKERS 112
5-1.18–5.19 RESERVED 112
5-1.20 COORDINATION WITH OTHER ENTITIES 112
5-1.21–5-1.22 RESERVED 113
5-1.23 SUBMITTALS 113
5-1.24 SOLID WASTE MANAGEMENT 116
5-1.25 RESERVED 117
5-1.26 CONSTRUCTION SURVEYS 117
5-1.27 RECORDS 117

5-1.28–5-1.29 RESERVED 119
5-1.30 NONCOMPLIANT AND UNAUTHORIZED WORK 119
5-1.31 JOB SITE APPEARANCE 119
5-1.32 AREAS FOR USE 119
5-1.33 EQUIPMENT 119
5-1.34–5-1.35 RESERVED 120
5-1.36 PROPERTY AND FACILITY PRESERVATION 120
5-1.37 MAINTENANCE AND PROTECTION 123
5-1.38 MAINTENANCE AND PROTECTION RELIEF 124
5-1.39 DAMAGE REPAIR AND RESTORATION 125
5-1.40–5-1.41 RESERVED 126
5-1.42 REQUESTS FOR INFORMATION 126
5-1.43 CLAIMS 126
5-1.44–5-1.45 RESERVED 132
5-1.46 FINAL INSPECTION AND CONTRACT ACCEPTANCE 132
5-1.47–5-1.50 RESERVED 132
6 CONTROL OF MATERIALS 133
6-1 GENERAL 133
6-2 MATERIAL SOURCE 133
6-3 QUALITY 134
7 LEGAL RELATIONS AND RESPONSIBILITY TO THE PUBLIC 140
7-1.01 GENERAL 140
7-1.02 LAWS 140
7-1.03 PUBLIC CONVENIENCE 149
7-1.04 PUBLIC SAFETY 150
7-1.05 INDEMNIFICATION 153
7-1.06 INSURANCE 155
7-1.07 LEGAL ACTIONS AGAINST THE COUNTY 157
7-1.08 PERSONAL LIABILITY 157
7-1.09–7-1.10 RESERVED 158
7-1.11 FEDERAL LAWS FOR FEDERAL-AID CONTRACTS 158
7-1.12 FEDERAL WAGE DETERMINATION 161
8 PROSECUTION AND PROGRESS 162
8-1.01 GENERAL 162
8-1.02 SCHEDULE 162
8-1.03 PRECONSTRUCTION CONFERENCE 168
8-1.04 START OF JOB SITE ACTIVITIES 169
8-1.05 TIME 170
8-1.06 SUSPENSIONS 170
8-1.07 DELAYS 170
8-1.08–8-1.09 RESERVED 173
8-1.10 LIQUIDATED DAMAGES 173
8-1.11–8-1.12 RESERVED 174
8-1.13 TERMINATION OF THE CONTRACT 174

8-1.14–8-1.16 RESERVED 177
9 PAYMENT 178
9-1.01 GENERAL 178
9-1.02 MEASUREMENT 178
9-1.03 PAYMENT SCOPE 180
9-1.04 FORCE ACCOUNT 181
9-1.05 EXTRA WORK PERFORMED BY SPECIALISTS 184
9-1.06 CHANGED QUANTITY PAYMENT ADJUSTMENTS 184
9-1.07 PAYMENT ADJUSTMENTS FOR PRICE INDEX FLUCTUATIONS 185
9-1.08–9-1.14 RESERVED 188
9-1.15 WORK-CHARACTER CHANGES 188
9-1.16 PROGRESS PAYMENTS 188
9-1.17 FINAL PAYMENT 195
TECHNICAL PROVISIONS 198
STANDARD SPECIFICATIONS 200
STANDARD PLANS 202
SPECIAL PROVISIONS 204
APPENDICES
A - FEDERAL WAGE DETERMINATION
B - REVISED STANDARD SPECIFICATIONS
C - ENVIRONMENTAL PERMIT SUMMARY FORM
D - DWR ENCROACHMENT PERMIT
E - RULES GOVERNING BID PROTESTS AND OTHER CHALLENGES TO AWARDS OF CONSTRUCTION CONTRACTS
F - REVISED STANDARD PLAN
G - COUNTY STANDARD DRAWING
H – STOCKPILE LOCATION MAP
I – FORMS
PROJECT PLANS

COUNTY OF SAN LUIS OBISPO

DEPARTMENT OF PUBLIC WORKS AND TRANSPORTATION

NOTICE AND INSTRUCTIONS TO BIDDERS

FOR

TAR SPRING CREEK BRIDGE ON BRANCH MILL ROAD

CONTRACT NO. 300385

FEDERAL AID PROJECT NO. BRLO-5949(116)

COUNTY OF SAN LUIS OBISPO
DEPARTMENT OF PUBLIC WORKS AND TRANSPORTATION

NOTICE TO BIDDERS

Notice is given that sealed bids will be received at the office of the County Clerk, 1055 Monterey Street, Room D-120, San Luis Obispo, California 93408 before 3:00 p.m. on Thursday, _____, 2015, for the following public works project:

TAR SPRING CREEK BRIDGE ON BRANCH MILL ROAD

CONTRACT NO. 300385

FEDERAL AID PROJECT NO. BRLO-5949(116)

Bids will be opened and declared by the County Clerk at 3:15 p.m. on the Bid opening date at a public meeting at 1055 Monterey Street, Room D-120, San Luis Obispo, California 93408.

Any bid received at the Office of the Clerk of the Board of Supervisors of the County of San Luis Obispo at or after 3:00 p.m. on the date specified above will not be accepted, and will be returned to the bidder unopened.

Bids are required for the entire work described in the Contract Documents.

An official bound copy of the Contract Documents (including a reduced size set of the Project Plans, the Agreement, the General Conditions, the Technical Provisions, and blank forms suitable for use in bidding on said work) may be obtained from the Department of Public Works, Room 206, County Government Center, San Luis Obispo, CA 93408 and may be purchased for _____ ($_____), (tax included), per bound copy; said purchase cost is not refundable. Such documents must be purchased from the Department of Public Works in order to be recognized as an official planholder. A full size set of Project Plans and cross sections, if available, are charged separately at the Department's current rates and will be provided upon request only.

Addenda, if any, will be issued to official planholders and shall form a part of the Contract Documents.

The bidder must have either a Class A license or a combination of class C licenses that make up a majority of the work at the time the Contract is awarded (Public Contract Code § 3300). When the bidder holds a combination of Class C licenses, all work to be performed outside of the bidder's license specialties, except work that is incidental or supplemental to the licenses of the bidder, shall be performed by licensed subcontractors in compliance with the Subletting and Subcontracting Fair Practices Act (Chapter 4 (commencing with Section 4100) of Part 1 of Division 2 of the Public Contract Code)

Pursuant to Public Contract Code section 1771.1:

- A contractor or subcontractor shall not be qualified to bid on, be listed in the Bid Proposal, subject to the requirements of Section 4104of the Public Contract Code, or engage in the performance of this public works project, unless currently registered with the Department of Industrial Relations and qualified to perform work pursuant to Labor Code section 1725.5. It is not a violation of this section for an unregistered contractor to submit a bid that is authorized by Section 7029.1 of the Business and Professions Code or by Section 10164 or 20103.5 of the Public Contract Code, provided the contractor is registered to perform public work pursuant to Section 1725.5 at the time the contract is awarded.

- This Project is subject to compliance monitoring and enforcement by the Department of Industrial Relations.

The DBE (Disadvantaged Business Enterprise) Contract goal is 2 percent.

For the federal training program, the number of trainees or apprentices is 0.

A non-mandatory pre-bid conference will be held at the Tar Springs Creek Bridge on Branch Mill Road, 1/4 mile southwest of Huasna Road, in Arroyo Grande, CA on the following date(s) and time(s):

March 11, 2015 at 10:00 a.m.

March 18, 2015 at 10:00 a.m.

Submit Requests for Information to the County no later than 4:00 p.m. three (3) business days before the Bid opening date. Bidders' Requests for Information submitted after said date may not be considered. Bidders' Requests for Information must be submitted electronically using the Request for Information Form located at the following website:

http://www.slocounty.ca.gov/PW/Design_Division/Projects_Out_To_Bid.htm

Bids must be submitted under sealed cover plainly marked as a bid and identified with the project number, the date and time for receipt of sealed bids, and the name of the bidder.

Bids must be accompanied by cash, a certified or cashier's check, or a bidder's bond in favor of the County in an amount not less than ten percent (10%) of the submitted total Bid Price.

Pursuant to Public Contract Code section 22300, the successful bidder may substitute certain securities for funds withheld by County to ensure performance under the Contract or, in the alternative, request the County to make payment of retention to an escrow agent.

The successful Bidder will be required to furnish the County with payment and performance bonds, with each issued by a California admitted surety insurer equal to 100% of the Contract Price.

Bidders must take necessary and reasonable steps to ensure that DBEs have opportunity to participate in the Contract (49 CFR 26).

Pursuant to section 1770 et seq. of the California Labor Code, the Contractor and all Subcontractors shall pay not less than the prevailing rate of per diem wages as determined by the Director of the California Department of Industrial Relations and comply with all applicable Labor Code provisions, which include, but are not limited to the employment of apprentices, the hours of labor, and the debarment of contractors and subcontractors. The Director of the California Department of Industrial Relations determines the general prevailing wage rates. Copies are available at the Office of the Clerk of the Board of Supervisors or at the DIR website, http://www.dir.ca.gov/DLSR/PWD.

The Davis-Bacon Act (40 USC 276a to 276a-7) as supplemented in the Department of Labor regulations (29 CFR Part 5) applies to this Contract. The federal minimum wage rates as determined by the United States Secretary of Labor are included the Contract Documents and are available at http://www.wdol.gov/dba.aspx. If the minimum wage rates differ from the general prevailing wage rates determined by the Director of the California Department of Industrial Relations for similar classifications of labor, the Contractor and its Subcontractors must not pay less than the higher wage rate. The County does not accept lower State wage rates not specifically included in the federal wage determinations. This includes helper, or other classifications based on hours of experience, or any other classification not appearing in the federal wage determinations. Where Federal wage determinations do not contain the State wage rate determination otherwise available for use by the Contractor and its Subcontractors, the Contractor and its Subcontractors must pay not less than the Federal minimum wage rate that most closely approximates the duties of the employees in question.

By order of the Board of Supervisors of the County of San Luis Obispo made this _____ day of

_____, 20____.

County Clerk and Ex-officio Clerk
of the Board of Supervisors

By _____
Deputy Clerk

SIGNATURES

The Contract Documents for the Tar Spring Creek Bridge on Branch Mill Road, Contract No. 300385, Federal-Aid Project No. BRLO-5949(116) presented herein have been prepared by or under the direction of the following registered engineers:

General Conditions prepared by:

Design Engineer

REGISTERED PROFESSIONAL ENGINEER
JEFF B. WERST
C 47971
EXP 12-31-15
CIVIL
STATE OF CALIFORNIA

1/29/15
Date

Recommend for Approval and Advertising by:

Dave Flynn
Deputy Director of Public Works

1/30/15
Date

Approved by:

Director of Public Works

1.30.15
Date

Special Provisions prepared by:

STRUCTURES AND HIGHWAY

Kelly Gallagher

REGISTERED CIVIL ENGINEER

REGISTERED PROFESSIONAL ENGINEER

Kelly Gallagher

No. C49076

Exp. 9/30/16

STATE OF CALIFORNIA

INSTRUCTIONS TO BIDDERS

1. CONTRACT DOCUMENTS

The Contract Documents may be obtained from the County at the location specified in the Notice to Bidders. To be recognized as an official planholder, Bidders must purchase the Contract Documents from the County and provide the County a name, street address, email address, phone number, and fax number. Any charge for the Contract Documents is stated in the Notice to Bidders.

The Contract Documents include the Notice to Bidders, Instructions to Bidders, Bid Forms, Agreement, General Conditions, Special Provisions, if any, Project Plans, Standard Specifications, Revised Standard Specifications, and Standard Plans. The Standard Specifications and Standard Plans may be viewed at the following Caltrans Office Engineer website:

http://www.dot.ca.gov/hq/esc/oe/construction_standards.html

The County does not assume any liability or responsibility based on any defective or incomplete copying, excerpting, scanning, faxing, downloading, or printing of the Contract Documents.

2. JOB SITE AND CONTRACT DOCUMENT EXAMINATION

Bidders are responsible for examining the job site and the Contract Documents, including any Addenda issued prior to the Bid Deadline, and for informing themselves with respect to local labor availability, means of transportation, necessity for security, laws and codes, local permit requirements, wage scales, local tax structure, contractors licensing requirements, availability of required insurance, and other factors that could affect the Work. Bidders are responsible for consulting the standards referenced in the Contract Documents.

Submission of a Bid is a Bidder's acknowledgment that the Bidder has examined the job site and bid documents and is satisfied with:

1. General and local conditions to be encountered
2. Character, quality, and scope of work to be performed
3. Quantities of materials to be furnished
4. Character, quality, and quantity of surface and subsurface materials or obstacles
5. Requirements of the Contract Documents

3. PRE-BID CONFERENCE

Two non-mandatory pre-bid conferences will be held on the date(s) and time(s) indicated in the Notice to Bidders.

4. ADDENDA

The County reserves the right to revise the Contract Documents prior to the Bid opening date. Revisions, if any, will be made by written Addenda. All Addenda issued by the County shall be included in the Bid and made part of the Contract Documents. Pursuant to Public Contract Code section 4104.5, if the County issues an Addendum that includes material changes to the work less than 72 hours prior to the Bid Deadline, the County will extend the Bid Deadline. The County may determine, in its sole discretion, whether an Addendum warrants postponement of the Bid Deadline.

All Addenda issued will be emailed to all official planholders at the email address provided to the County at the time Contract Documents were obtained from the County. An informational electronic copy of all Addenda will also be posted to the following website:

http://www.slocounty.ca.gov/PW/Design_Division/Projects_Out_To_Bid.htm

All bidders are required to acknowledge and confirm receipt of each and every addendum in their Bid. Failure to acknowledge all Addenda may result in a Bid being deemed nonresponsive and not eligible for award of the Contract.

5. SUPPLEMENTAL PROJECT INFORMATION

The County makes the following Supplemental Project Information available for review at the County of San Luis Obispo Public Works Department front counter during normal business hours and is also available at the following website:

http://www.slocounty.ca.gov/PW/Design_Division/Projects_Out_To_Bid.htm

The following documents are available for review:

1. Foundation Report for Branch Mill Bridge Replacement over Tar Spring Creek
2. RWQCB approved Diversion and Dewatering Plan

Supplemental Project Information may not show existing dimensions and conditions. Plans of existing bridges available are reproductions of the original plans, with significant changes noted, , and do not necessarily show normal construction tolerances and variances. Where dimensions of new construction required by this Contract are dependent on the dimensions of existing bridges or other existing structures, the Contractor shall verify the controlling field dimensions and shall be responsible for adjusting dimensions of the work to fit existing conditions.

6. ENGINEER'S ESTIMATE

Any engineers estimate provided by the County relating to this Work has been provided strictly for informational purposes, and cannot be relied upon by any bidder as representing an accurate estimate of the value of the Work. The purpose of providing any such engineer's estimate is simply to provide each potential bidder with some preliminary information relating to whether the Work may be within its bonding capacity and available resources. Under no circumstance may a bidder rely upon the engineer's estimate as representing a reasonable value of the Work. Sometimes engineer's estimates are significantly higher or lower than the actual bids received.

7. COMPLETION OF BID FORMS

Prepare bids using only copies of the Bid Forms, which are included in the Contract Documents issued by the County. The use of Bid Forms other than clear and correct photocopies of those provided by the County will not be permitted. Bids must be executed by an authorized signatory as described in these Instructions to Bidders. Bidders must fill in all blank spaces (including inserting "N/A" where applicable) and initial all interlineations, alterations, or erasures to the Bid Forms. Bidders must not delete, modify, or supplement the printed matter on the Bid Forms or make substitutions thereon. Use of black or blue ink, indelible pencil, or a typewriter is required. Deviations in the Bid Forms may result in a Bid being deemed nonresponsive and not eligible for award of the Contract.

8. LICENSING REQUIREMENTS

Pursuant to section 7028.15 of the Business and Professions Code, Bidders must possess licenses issued by the California Contractors State License Board for performance of this Contract. Subcontractors must possess the appropriate licenses for each specialty subcontracted.

The County has determined that Bidders must have the class of license designated in the Notice to Bidders to be eligible for award of this Contract. The Contractor shall be properly licensed by the time the Contract is awarded, pursuant to the provisions of Public Contract Code section 20103.5. Failure of the Bidder to obtain proper and adequate licensing for award of the Contract constitutes a failure to execute the Contract and shall result in the forfeiture of the security of the bidder.

Pursuant to Public Contract Code section 20676, sellers of "mined material" must be on an approved list of sellers published pursuant to Public Resources Code section 2717(b) in order to supply mined material for this Contract.

9. REGISTRATION REQUIREMENTS

A contractor or subcontractor shall not be qualified to bid on, be listed in a bid proposal subject to the requirements of Public Contract Code section 4104, or engage in the performance of this Contract unless currently registered with the California Department of Industrial Relations and qualified to perform public work pursuant to Labor Code section 1725.5. It is not a violation of Labor Code section 1725.5 for an

unregistered contractor to submit a Bid on this federally-funded Contract, provided the contractor is registered to perform public work pursuant to Section 1725.5 at the time this Contract is awarded.

10. BID SECURITY

Each Bid shall be accompanied by Bid Security consisting of: (a) cash; (b) a certified check made payable to the County; (c) a cashier's check made payable to the County; or (d) a bidder's bond in favor of the County executed by the Bidder as principal and surety as obligor, in an amount not less than 10% of the total Bid Price.

The surety insurer shall be admitted to transact surety business in the State of California, as defined in Code of Civil Procedure section 995.120. Personal sureties and unregistered surety companies are unacceptable. The cash, check, or bidder's bond shall be given as a guarantee that the Bidder: (1) will execute the Contract if it is awarded to the Bidder, and (2) shall provide the required payment and performance bonds and insurance certificates and endorsements as required by the Contract Documents. Failure to provide the required documents may result in forfeiture of the Bid Security and the County may award the Contract to another Bidder or may call for new Bids.

11. BID ITEM LIST

Bidder shall submit a bid based on the bid item quantities the County shows on the Bid Item List. The Bid Item List is included in the Bid Forms.

In case of discrepancy between the unit price and the total set forth for a unit basis item, the unit price shall prevail, except as provided:

A. If the amount set forth as a unit price is ambiguous, unintelligible, or uncertain for any reason, or is omitted, or is the same amount as the entry in the "Total" column, then the amount set forth in the "Total" column for the item shall prevail and shall be divided by the estimated quantity for the item and the price thus obtained shall be the unit price.

B. (Decimal Errors) If the product of the entered unit price and the estimated quantity is exactly off by a factor of ten, one hundred, etc., or one-tenth, or one-hundredth, etc. from the entered total, the discrepancy will be resolved by using the entered unit price or item total, whichever most closely approximates percentage-wise the unit price or item total in the County's Final Estimate of cost.

12. DESIGNATION OF SUBCONTRACTORS (Public Contract Code 4100-4114)

On the *Designation of Subcontractors* form, Bidders shall list each subcontractor to whom the Bidder proposes to directly subcontract portions of the Work in an amount in excess of 1/2 of one percent of the total Bid Price, or in the case of bids for the construction of streets and highways, including bridges, in excess of 1/2 of one percent or $10,000, whichever is greater. The *Designation of Subcontractors* form for listing subcontractors is included in the Bid Forms.

For each subcontractor listed, the *Designation of Subcontractors* form must show:

1. Business name and the location of its place of business.
2. California contractors license number.
3. Portion of Work it will perform. Show the portion of the Work by:
   - 3.1. Description of portion of subcontracted Work
   - 3.2. Bid item numbers for the Work involved in the portion of Work listed
   - 3.3. Percentage of the total Bid Price for each bid item listed

13. DISADVANTAGED BUSINESS ENTERPRISES (DBE)

Under 49 CFR 26.13(b):

> The contractor, subrecipient, or subcontractor shall not discriminate on the basis of race, color, national origin, or sex in the performance of this contract. The contractor shall carry out applicable requirements of 49 CFR part 26 in the award and administration of DOT-assisted contracts. Failure by the contractor to carry out these requirements is a material breach of this contract, which may result in the termination of this contract or such other remedy as the recipient deems appropriate.

Bidders shall take necessary and reasonable steps to ensure that DBEs have opportunity to participate in the contract (49 CFR 26).

To ensure equal participation of DBEs provided in 49 CFR 26.5, the County shows a goal for DBEs.

Bidders must meet the DBE goal shown on the Notice to Bidders or demonstrate that they made adequate good faith efforts to meet this goal.

Bidders are responsible for making work available to DBEs and select Work parts consistent with available DBE subcontractors and suppliers and for verifying that each DBE firm is certified as DBE at date of Bid opening.

For a list of DBEs certified by the California Unified Certification Program, go to:

http://www.dot.ca.gov/hq/bep/find_certified.htm.

All DBE participation will count toward Caltrans' federally-mandated statewide overall DBE goal.

Credit for materials or supplies purchased from DBEs counts towards the goal in the following manner:

1. 100 percent if the materials or supplies are obtained from a DBE manufacturer.
2. 60 percent if the materials or supplies are obtained from a DBE regular dealer.
3. Only fees, commissions, and charges for assistance in the procurement and delivery of materials or supplies, if they are obtained from a DBE that is neither a manufacturer nor regular dealer. 49 CFR 26.55 defines "manufacturer" and "regular dealer."

Credit toward the DBE goal is obtained if you employ a DBE trucking company that performs a commercially useful function as defined in 49 CFR 26.55(d)(1) through (4) and (6).

14. DBE COMMITMENT FORM

Each bidder shall submit the *DBE Commitment* form with its Bid regardless of whether DBE participation is reported.

Bidders are encouraged to submit written confirmation for each DBE listed on said form that is participating in the Contract at the time Bids are submitted. A copy of a DBE's quote will serve as written confirmation that the DBE is participating in the Contract. If said written confirmation is not submitted with the Bid, the apparent low Bidder, second low Bidder, and the third low Bidder must submit this confirmation to the office of the County Clerk, 1055 Monterey Street, Room D-120, San Luis Obispo, CA 93408, no later than 4:00 p.m. on the second business day after Bid opening. Failure to submit said confirmation within said time period shall be grounds for forfeiture of the Bid Security. Other Bidders do not need to submit the written confirmation unless the County requests it. If the County requests a bidder to submit this confirmation, the bidder shall submit said confirmations no later than 4:00 p.m. on the third business day following the request.

If a DBE is participating as a joint venture partner, Bidders are encouraged to submit a copy of the joint venture agreement.

A DBE subcontractor listed on the *DBE Commitment* form shall also be listed on the *Designation of Subcontractors* form when the Bidder proposes to subcontract portions of the Work in an amount in excess of 1/2 of one percent of the total Bid Price, or in the case of Bids for the construction of streets and highways, including bridges, in excess of 1/2 of one percent of the total Bid Price or $10,000, whichever is greater, in accordance with the Subletting and Subcontracting Fair Practices Act (Public Contract Code section 4100 et seq.).

15. GOOD FAITH EFFORTS SUBMITTAL

Bidders are encouraged to submit the *DBE Information – Good Faith Efforts* form and supporting documentation (hereafter, collectively "GFE documentation") with their bid to establish that, before the bid, the bidder made adequate Good Faith Efforts (GFE) to meet the goal.

If the GFE documentation is not submitted with the bid, the apparent low Bidder, second low Bidder, and the third low Bidder must complete and submit this documentation to the County. The GFE documentation must be received by the County no later than 4:00 p.m. on the second business day after

Bid opening. Failure to submit the GFE documentation as required shall be grounds for forfeiture of the Bid Security. GFE documentation shall be submitted to the office of the County Clerk, 1055 Monterey Street, Room D-120, San Luis Obispo, California 93408.

Other Bidders do not need to submit the GFE documentation unless the County requests it. If the County requests a Bidder to submit their GFE documentation, the Bidder shall submit said documentation no later than 4:00 p.m. on the third business day following the request.

Bidders are cautioned that even if their *DBE Commitment* form indicates they will meet the DBE goal, they are required to submit their GFE documentation, within the time specified herein, to be considered a responsive Bidder in the event the County finds the DBE goal has not been met.

The GFE documentation must include the following information and supporting documents, as necessary:

1. Items of work made available to DBE firms. Identify those items of work the Bidder might otherwise perform with its own forces and those items that have been broken down into economically feasible units to facilitate DBE participation. For each item listed, show the dollar value and percentage of the total Bid Price. It is the Bidder's responsibility to demonstrate that sufficient Work to meet the goal was made available to DBE firms.

2. The names of certified DBEs and the dates on which they were solicited to bid on the Project. Include the items of Work offered. Describe the methods used for following up initial solicitations to determine with certainty if the DBEs were interested, and the dates of the follow up. Attach supporting documents such as copies of letters, memos, emails, and facsimiles sent, telephone logs, telephone billing statements, and other evidence of solicitation. Bidders are reminded to solicit certified DBEs through all reasonable and available means and provide sufficient time to allow DBEs to respond.

3. Name of selected firm and its status as a DBE for each item of Work made available. Include name, address, and telephone number for each DBE that provided a quote and their price quote. If the firm selected for the item is not a DBE, provide the reasons for the selection.

4. Name and date of each publication in which a request for DBE participation for the Project was placed by the Bidder. Attach copies of the published advertisements.

5. Names of agencies and the dates on which they were contacted to provide assistance in contacting, recruiting, and using DBE firms. If the agencies were contacting in writing, provide copies of supporting documents.

6. List of efforts made to provide interested DBEs with adequate information about the plans, specifications, and requirements of the Contract to assist them in responding to a solicitation. If the Bidder has provided information, identify the name of the DBE assisted, the nature of the information provided, and date of contact. Provide copies of supporting documents, as appropriate.

7. List of efforts made to assist interested DBEs in obtaining bonding, lines of credit, insurance, necessary equipment, supplies, and materials (excluding supplies and equipment that the DBE subcontractor purchases or leases from the prime contractor or its affiliate). If such assistance was provided by the Bidder, identify the name of the DBE assisted, nature of the assistance offered, and date assistance was provided. Provide copies of supporting documents, as appropriate.

8. Any additional data to support a demonstration of GFE.

The County may consider DBE commitments of the 2nd low and 3rd low Bidders when determining whether the low Bidder made good faith efforts to meet the DBE goal.

16. DEBARMENT OF CONTRACTORS AND SUBCONTRACTORS

In accordance with the provisions of the Labor Code, contractors or subcontractors may not perform work on a public works project with a subcontractor who is ineligible to perform work on a public project pursuant to section 1777.1 or section 1777.7 of the Labor Code. Any contract on a public works project entered into between a contractor and a debarred subcontractor is void as a matter of law. A debarred subcontractor may not receive any public money for performing work as a subcontractor on a public works contract. Any public money that is paid to a debarred subcontractor by the Contractor shall be

returned to the County. The Contractor shall be responsible for the payment of wages to workers of a debarred subcontractor used on the work

A list of contractors barred by the Division of Labor Standards Enforcements is available on the following Department of Industrial Relations website:

http://www.dir.ca.gov/dlse/debar.html

In accordance with 49 CFR 29, contractors or subcontractors shall not perform work on this project if they are debarred, suspended, or otherwise excluded from or ineligible for participation in federal assistance programs. The *Excluded Parties List System (EPLS) is* maintained by the General Services Administration (GSA) and available at the following website:

https://www.sam.gov/portal/public/SAM/

Pursuant to FHWA-1273 (attached as Exhibit B to the Agreement) each Bidder shall itself comply, and require that each subcontractor and lower-tiered subcontractor comply, with the requirements in section X of FHWA-1273 entitled "Certification Regarding Debarment, Suspension, Ineligibility and Voluntary Exclusion."

17. DECLARATION OF NONCOLLUSION.

The *Declaration of Noncollusion* form shall be signed, under penalty of perjury, certifying that the Bid is not the result of and has not been influenced by collusion. Any Bid made without such declaration, or believed to be made in violation thereof, may be rejected.

18. IRAN CONTRACTING ACT CERTIFICATION

Each Bidder shall submit the certification required by the Iran Contracting Act of 2010, Public Contract Code section 2200 et seq. with its Bid. The certification is included in the Bid Forms section of the Contract Documents.

19. OPT OUT OF PAYMENT ADJUSTMENTS FOR PRICE INDEX FLUCTUATIONS

A Bidder may opt out of the payment adjustments for price index fluctuations specified in Section 9-1.07 of the General Conditions. To opt out, a Bidder must submit a completed *Opt Out of Payment Adjustments for Price Index Fluctuations* form (included in the Forms section of the Appendices of the Contract Documents).

20. SIGNING OF BIDS

All Bids submitted shall be executed by the Bidder or its authorized representative. Bidders may be asked to provide evidence in the form of an authenticated resolution of its Board of Directors or a Power of Attorney evidencing the capacity of the person signing the Bid to bind the Bidder to each Bid and to any Contract.

If the Bidder is a corporation, the legal name of the corporation shall be set forth on the Bid Proposal Form with the signature of the officer or officers authorized to sign contracts on behalf of the corporation. If the Bidder is a partnership, the true name of the firm shall be set forth on the Bid Proposal Form with the signature of the partner or partners authorized to sign contracts on behalf of the partnership. If the Bidder is an individual, his or her signature shall be placed on the Bid Proposal Form. If signature is by an agent, other than an officer of a corporation or a member of a partnership, a Power of Attorney must be submitted with the Bid; otherwise, the Bid will be disregarded as irregular and unauthorized.

21. SUBMISSION OF SEALED BIDS

Once the Bid Forms have been completed and signed as set forth herein, place them, along with the Bid Security and other required materials, in an envelope, sealed, addressed, and delivered or mailed, postage prepaid, to the County as indicated in the Notice to Bidders. No oral or telephonic bids will be considered. No forms transmitted via the internet, e-mail, facsimile, or any other electronic means will be considered. Bids must be plainly marked as a Bid and identified with the Project number, the date and time of receipt of sealed Bids, and the name of the Bidder.

22. DELIVERY AND OPENING OF BIDS

Bids will be received by the County at the address shown in the Notice to Bidders prior to the date and time shown therein. The County will leave unopened any Bid received after the specified date and time, and any such unopened Bid will be returned to the Bidder. It is the Bidder's sole responsibility to ensure that its Bid is received as specified. Bids may be submitted earlier than the date and time indicated.

Bids will be opened as stated in the Notice to Bidders, and the amount of each Bid will be read aloud and recorded. All Bidders may, if they desire, attend the opening of Bids. The County may in its sole discretion, elect to postpone the opening of the submitted Bids. County reserves the right to reject any or all Bids and to waive any informality or irregularity in any Bid.

23. WITHDRAWAL OF BID

Any Bidder may withdraw its Bid by written request any time prior to the time set forth in the Notice to Bidders for the opening of Bids by notice to the County Clerk at 1055 Monterey Street, Room D-120, San Luis Obispo, CA 93408. Such notice shall be in writing signed by the Bidder and shall be received, and date-stamped and time-stamped by the County Clerk. Withdrawn Bids may be resubmitted on or before the time set forth in the Notice to Bidders for receipt of Bids provided that they are in full conformance with the Contract Documents. Once submitted, all Bids are irrevocable, except as otherwise provided by law. Each Bidder agrees by submitting a Bid that its Bid shall remain open, is irrevocable, and may not be modified, withdrawn, or cancelled for a period of at least ninety (90) calendar days after Bid opening. Any request for County's consent to permit a Bidder to withdraw a Bid after the Bid Deadline must be made in accordance with Public Contract Code section 5100 et seq., including, but not limited to, submission of written notice to the County within five (5) business days after Bid opening specifying in detail how the mistake occurred.

24. RESERVATION OF RIGHTS

The County reserves the right to reject any or all bids, and to waive discrepancies, irregularities, informalities, or any other error in the bid or bidding, if to do so seems to best serve the public interest. The right of the County to waive errors applies even if the Contract Documents state that a discrepancy, irregularity, informality, or other error make a bid nonresponsive, so long as the error does not constitute a material error.

The County reserves the right, in its sole discretion, to: judge the Bidder's representations as stated in the Bid forms and any post-Bid information to determine whether or not Bidder is qualified to perform the Work; be the sole judge regarding the suitability of the products, services, or supplies offered; to not purchase all items or the full quantity of each item listed in the Bid Item List; reject any or all Bids; waive any deficiencies, irregularities, or informalities in any Bids or in the bidding process; modify, cancel, or withdraw the Notice to Bidder; issue a new Notice to Bidders; suspend or abandon the Project; seek the assistance of outside technical experts in Bid evaluation; require a Bidder to provide a guarantee (or guarantees) of the Contract by a third party; and not issue a Notice to Proceed after execution of the Contract. In submitting a Bid in response to the Notice to Bidders, the Bidder is specifically acknowledging the County holds these rights. The Notice to Bidders does not commit the County to enter into a Contract, to reject, in its sole discretion, all Bids, nor does it obligate the County pay for any costs incurred in preparation and submission of a Bid or in anticipation of a Contract. By submitting a Bid, the Bidder disclaims any right to be paid for such costs.

25. BASIS OF AWARD; BALANCED BIDS

The County will award the Contract to the responsible Bidder that submits the lowest responsive Bid, which shall be determined as set forth in the Notice to Bidders and as provided in these Instructions to Bidders.

In accordance with 23 CFR 635.102, Bids in which the prices are mathematically or materially unbalanced may be rejected. Following are the U.S. Comptroller General's definitions of mathematically and materially unbalanced bids:

- A bid is mathematically unbalanced if the bid is structured on the basis of nominal prices for some work and inflated prices for other work; that is, each element of the bid must carry its proportionate share of the total cost of the work plus profits.

- A bid is materially unbalanced if there is reasonable doubt that award to the bidder submitting the mathematically unbalanced bid will result in the lowest ultimate cost to the County.

26. DISQUALIFICATION OF BIDDERS; INTEREST IN MORE THAN ONE BID

No Bidder shall be allowed to make, submit, or be interested in more than one Bid. However, a person, firm, corporation or other entity that has submitted a proposal to a Bidder, or that has quoted prices of materials to a Bidder, is not thereby disqualified from submitting a proposal or quoting prices to other Bidders submitting a Bid to the County, or submitting a Bid to the County as a prime Bidder.

A firm that the County has hired to provide architectural or engineering services to the County for this Contract before Bid submittal for this Contract is prohibited from all of the following:

1. Submitting a Bid;
2. Subcontracting for a part of the Work; and
3. Supplying materials.

27. INSURANCE REQUIREMENTS

The successful Bidder shall procure and maintain insurance in the forms, in the amounts and for the durations specified in the General Conditions.

28. RESPONSIVE BID

A responsive Bid is a Bid that conforms, in all material respects, to these Instructions to Bidders. Non-responsive Bids will be rejected.

29. RESPONSIBLE BIDDER

A responsible Bidder means a Bidder who has demonstrated the attributes of trustworthiness, quality, fitness, capacity, and experience to satisfactorily perform fully the requirements of the Contract Documents and the moral and business integrity and reliability that will assure good faith performance in the sole discretion of the County. Any determination of a Bidder's nonresponsibility by the County shall be based on the fitness and capacity of the Bidder to satisfactorily perform the obligations of the Contract, whether or not the Bidder is qualified to perform those obligations, whether or not the Bidder is trustworthy, and such other bases as may be relevant.

30. EVIDENCE OF RESPONSIBILITY AND ADDITIONAL INFORMATION

In addition to other provisions of the Bidding Requirements, upon the request of the County, a Bidder whose Bid is under consideration for the award of the Contract shall promptly submit satisfactory evidence to County showing the Bidder's financial resources, experience in the field, and organization and other factors evidencing Bidder's ability to successfully execute and complete the Contract.

31. AWARD PROCESS

Once all Bids are opened and reviewed to determine the lowest responsive and responsible Bidder, the County may award the Contract or reject all Bids. Once the County notifies the selected Bidder of the award, the Bidder will have five (5) business days from the date of the award and tender of Contract to deliver to County the executed Contract, all of the required bonds, evidence of insurance, and other materials set forth in the Contract Documents. Once the County receives all of the properly executed documents and certifications, the County will deliver the fully executed Contract to the Contractor and issue a Notice to Proceed. If the County's issuance of a Notice to Proceed is delayed due to Contractor's failure to return fully-executed Contract, insurance, bonds, and other required documents within five (5) business days after the award and tender of the Contract, then Contractor agrees to the deduction of one (1) working day from the number of days in the Contract Time for every day of delay in County's receipt of said documents. This right is in addition to and does not affect the County's right to demand forfeiture of the Contractor's bid security if the Contractor persistently delays in providing the required documentation.

32. RETENTION AND SUBSTITUTION OF SECURITY

The County will make monthly progress payments based upon Work performed in accordance with the Contract Documents. Unless otherwise specified in the Notice to Bidders, the County will retain five percent (5%) of each progress payment as provided by the Contract Documents. At the request and expense of the Contractor, the Contractor may substitute securities for the amount so retained, or in the alternative, request the County make payment to an escrow agent in accordance with Public Contract Code section 22300. Contractor shall have thirty (30) calendar days following award of the Contract to submit a written request to the County to permit substitution of securities or payment of retention to an escrow agent; failure to do so shall be deemed a waiver of the right.

33. PERFORMANCE BOND AND PAYMENT (LABOR AND MATERIALS) BOND REQUIREMENTS

The successful Bidder shall deliver to the County two (2) fully executed, identical counterparts of the performance bond and payment (labor and materials) bond in the form supplied by the County and included in the Contract Documents. The penal amount of each bond shall be for one hundred percent (100%) of the total Contract Price.

34. SALES AND OTHER APPLICABLE TAXES, PERMITS, LICENSES AND FEES

Contractor and its Subcontractors performing Work under this Contract will be required to pay California sales tax and other applicable taxes, and to pay for permits, licenses, and fees required by the agencies with authority in the jurisdiction in which the Work will be located, unless otherwise expressly provided by the Contract Documents. Bidders shall include all applicable taxes and fees that are in effect or reasonably anticipated at the Bid Deadline in all Bid prices.

35. BID RIGGING

The U.S. Department of Transportation (DOT) provides a toll-free hotline to report bid rigging activities. Use the hotline to report bid rigging, Bidder collusion, and other fraudulent activities. The hotline number is (800) 424-9071. The service is available 24 hours a day, 7 days a week and is confidential and anonymous. The hotline is part of the DOT's effort to identify and investigate highway construction contract fraud and abuse and is operated under the direction of the DOT Inspector General.

36. BID PROTEST PROCEDURE

Bid protests and other challenges to the award of this Contract must comply with Rules Governing Bid Protests and Other Challenges to Awards of Construction Contracts (“Rules”). A copy of the Rules is attached to this Contract as an appendix. In addition, any Bid protest must be submitted in writing to the Department of Public Works, Room 207, County Government Center, 976 Osos Street, San Luis Obispo, CA 93408; Attention: Design Engineer.

END OF INSTRUCTIONS TO BIDDERS

COUNTY OF SAN LUIS OBISPO

DEPARTMENT OF PUBLIC WORKS AND TRANSPORTATION

BID FORMS

FOR

TAR SPRING CREEK BRIDGE ON BRANCH MILL ROAD

CONTRACT NO. 300385

FEDERAL AID PROJECT NO. BRLO-5949(116)

BID PROPOSAL FORM

TO THE BOARD OF SUPERVISORS
OF THE COUNTY OF SAN LUIS OBISPO, STATE OF CALIFORNIA'

TAR SPRING CREEK BRIDGE ON BRANCH MILL ROAD
CONTRACT NO. 300385
FEDERAL AID PROJECT NO. BRLO-5949(116)

NAME OF BIDDER _____

BUSINESS P.O. BOX _____

CITY, STATE, ZIP _____

BUSINESS STREET ADDRESS _____
(include even if P.O. Box used)

CITY, STATE, ZIP _____

PHONE NO: AREA CODE (_____) _____

FAX NO: AREA CODE (_____) _____

CONTRACTOR LICENSE NO. _____ **CLASSIFICATION** _____

PUBLIC WORKS CONTRACTOR REGISTRATION NO: _____

TAX I.D. NUMBER: _____

BUSINESS TYPE (Check one): **Corporation** _____ **Partnership** _____ **Sole Proprietorship** _____

Limited Liability Company ___

CONTACT PERSON NAME _____ **PHONE No.** _____

CONTACT PERSON E-MAIL _____

EMPLOYER'S TAX IDENTIFICATION NUMBER _____

Bidder agrees that the Bid and all prices shall remain open and shall not be withdrawn for a period of not less than ninety (90) calendar days from the Bid opening date, or until rejected by the County, whichever period is shorter.

1. ADDENDA

The undersigned acknowledges and confirms the receipt of the following Addenda:

Addenda Number	Date
_____	_____
_____	_____
_____	_____

and agrees that said addenda are covered in the bid proposal and shall form a part of the Contract Documents.

2. CERTIFICATION OF INSPECTION OF THE SITE AND CONTRACT DOCUMENTS

By signing below, Bidder certifies that it: has received, carefully examined, and is fully familiar with all of the provisions of the Contract Documents, including all Addenda and attachments, and that said Contract Documents contain sufficient detail regarding the Work to be performed; has notified the County of any errors or omissions in the Contract Documents and unusual site conditions; has carefully checked all words, prices, and statements in this Bid Proposal Form; and has visited the Project site and conducted such other field investigations which are prudent and reasonable in preparing the Bid. Bidder agrees that the County will not be responsible for any errors or omissions on the part of the undersigned in making the Bid.

3. BIDDER'S REPRESENTATIONS REGARDING INSURANCE AND BONDS

This Bid is made with the full knowledge of the kind, quantity, and quality of the materials and Work required and, if it is accepted by the County, the Bidder will enter into a Contract and furnish the bonds, insurance, and other documents as required by the Contract Documents within the time specified in the Contract Documents

4. CONTRACTORS LICENSE CERTIFICATION.

The undersigned certifies that:

Contractors License No. _____ issued by the California Contractors State License Board ("CSLB") to the undersigned on _____, _____, is current, valid, has not been revoked, suspended or cancelled, and is appropriate to the Work to be undertaken.

Contractors License Classification(s): _____

Expiration Date: _____

Name of Qualifying Individual: _____

5. TIME FOR COMPLETION

The Bidder agrees that if awarded the Contract, it shall complete the Work within the number of Working Days specified in the Contract Documents.

6. ATTACHMENTS TO THIS BID PROPOSAL FORM

Enclosed herewith (except as otherwise provided for optional forms) and by this reference incorporated herein and made a part of this Bid Proposal Form are the following items:

1. Bid Item List ☐
2. Designation of Subcontractors form ☐
3. DBE Commitment form ☐
4. Bidder's List of Subcontractors (DBE and Non-DBE) form ☐
5. Bidder's Equal Employment Opportunity Certification ☐
6. Subcontractor's Equal Employment Opportunity Certification ☐
7. Certification of Non-Segregated Facilities ☐
8. Declaration of Noncollusion ☐
9. Debarment and Suspension Certifications ☐
10. Iran Contracting Act Certification ☐
11. Workers' Compensation Certification ☐
12. Non-Lobbying Certification for Federal-Aid Contracts ☐
13. Disclosure of Lobbying Activities ☐
14. Bidder's Bond or other Bid Security ☐

The apparent low bidder, second low bidder, and the third low bidder shall submit each of the following with their bid or no later than 4:00 p.m. on the second business day after Bid opening to the office of the County Clerk, 1055 Monterey Street, Room D-120, San Luis Obispo, California 93408:

1. Written confirmation for each DBE listed on the DBE Commitment form that is participating in the Contract at the time bids are submitted. A copy of a DBE's quote will serve as written confirmation that the DBE is participating in the Contract. ☐
2. DBE Information - Good Faith Efforts form and documentation ☐

Bids are to be submitted for the entire Work. The amount for Bid comparison purposes will be the total of all items.

The Bidder shall set forth for each unit basis item of Work a unit price and a total for the item, and for each lump sum item a total for the item, all in clearly legible figures in the respective spaces provided for that purpose. In the case of unit basis items, the amount set forth under the "Total" column is the extension of the unit price bid on the basis of the approximate quantity for the item.

Bidder understands that this Contract is subject to 49 CFR 26 entitled "Participation By Disadvantaged Business Enterprise in Department of Transportation Financial Assistance Programs." Bidder further understands that the award of this Contract, if it be awarded, will be to the lowest responsible bidder whose proposal complies with all the requirements prescribed herein.

Bidder is fully informed respecting the requirements of 49 CFR 26 and has read and understands the Disadvantaged Business Enterprise (DBE) provisions set forth in Instructions to Bidders and General Conditions.

Accompanying this Bid Proposal Form is a bidder's bond, cash, cashier's check, or a certified check, payable to the County of San Luis Obispo, for the sum of at least ten percent (10%) of the total of the Bid. The proceeds thereof shall become the property of the County of San Luis Obispo if the Bid is withdrawn after the time fixed in the Notice to Bidders for the opening of Bids, or if, in case this Bid is accepted by the County and such Bidder has received written notice that the Contract has been awarded to him/her, the undersigned shall fail within five (5) business days to execute the Contract with the County and furnish all documents required in Section 3-1.18 of the General Conditions. Otherwise, said Bid Security, except a bidder's bond, will be returned to the undersigned.

7. BIDDER'S ORGANIZATION AND SIGNATURE AUTHORIZATION

The undersigned certifies that he/she/they is/are authorized to sign this Bid and any subsequent Contract on behalf of the bidding firm or company and that the nature of this bidding firm is an individual, partnership, corporation, or limited liability company with the principals or authorized officers of the firm listed as follows:

Nature of Firm: _____

(Corporation, Partnership, Individual, etc.)

Principal Officers/Partners/Members: _____

_____

_____

Name of President of Corporation: _____

Name of Secretary of Corporation: _____

Corporation is organized under laws of State of _____, and is authorized to transact business in the State of California.

_____
Company/Contractor Legal Name

_____
Signature

_____
Name (print/type)

_____
Title (print/type)

_____
Date

BID ITEM LIST

Item No.	Item Code	Item Description	Quantity	Unit	Unit Price	Total
1	066018	CONSTRUCTION JOB SITE TRAILER/OFFICE	1	LS	LUMP SUM	
2	070030	LEAD COMPLIANCE PLAN	1	LS	LUMP SUM	
3	120090	CONSTRUCTION AREA SIGNS	1	LS	LUMP SUM	
4	120100	TRAFFIC CONTROL SYSTEM	1	LS	LUMP SUM	
5	120120	TYPE III BARRICADE	12	EA		
6	130099	WATER POLLUTION CONTROL PROGRAM	1	LS	LUMP SUM	
7	130100	JOB SITE MANAGEMENT	1	LS	LUMP SUM	
8	130400	TEMPORARY CREEK DIVERSION SYSTEM	1	LS	LUMP SUM	
9	141000	TEMPORARY FENCE (TYPE ESA)	3810	LF		
10	150605	REMOVE FENCE	300	LF		
11	150770	REMOVE ASPHALT CONCRETE PAVEMENT	19400	SQFT		
12	152390	RELOCATE ROADSIDE SIGN	1	EA		
13	157550	BRIDGE REMOVAL	1	LS	LUMP SUM	
14	160101	CLEARING AND GRUBBING	1	LS	LUMP SUM	
15	190101	ROADWAY EXCAVATION	860	CY		
16	192003(F)	STRUCTURE EXCAVATION (BRIDGE)	304	CY		
17	193003(F)	STRUCTURE BACKFILL (BRIDGE)	194	CY		
18	198010	IMPORTED BORROW	2200	CY		
19	204001	WILLOW CUTTING	40	EA		
20	210280	ROLLED EROSION CONTROL PRODUCT (BLANKET)	27700	SQFT		
21	210351	COIR WATTLES	5740	LF		
22	210430	HYDROSEED	65900	SQFT		
23	210600	COMPOST	38200	SQFT		
24	260203	CLASS 2 AGGREGATE BASE	1600	CY		
25	260400	TEMPORARY CLASS 2 AGGREGATE BASE	180	CY		

26	390132	HOT MIX ASPHALT (TYPE A)	870	TON		
27	394074	PLACE HOT MIX ASPHALT DIKE (TYPE C)	90	LF		
28	394077	PLACE HOT MIX ASPHALT DIKE (TYPE F)	25	LF		
29	394090	PLACE HOT MIX ASPHALT (MISCELLANEOUS AREA)	9.4	SQYD		
30	397005	TACK COAT	6.4	TON		
31	486000	TEMPORARY BRIDGE	1	LS	LUMP SUM	
32	490782	FURNISH PILING (CLASS 200) (ALTERNATIVE W)	1353	LF		
33	490783	DRIVE PILE (CLASS 200) (ALTERNATIVE W)	18	EA		
34	510051(F)	STRUCTURAL CONCRETE, BRIDGE FOOTING	50	CY		
35	510053(F)	STRUCTURAL CONCRETE, BRIDGE	240	CY		
36	511035	ARCHITECTURAL TREATMENT	860	SQFT		
37	512279	FURNISH PRECAST PRESTRESSED CONCRETE BULB-TEE GIRDER (100'-110')	4	EA		
38	512500(F)	ERECT PRECAST PRESTRESSED CONCRETE GIRDER	4	EA		
39	519091	JOINT SEAL (MR 1 1/2")	75	LF		
40	520102(F)	BAR REINFORCING STEEL (BRIDGE)	54087	LB		
41	520106(F)	BAR REINFORCING STEEL (EPOXY COATED)	1990	LB		
42	560248	FURNISH SINGLE SHEET ALUMINUM SIGN (0.063"-UNFRAMED)	28	SQFT		
43	566011	ROADSIDE SIGN - ONE POST	5	EA		
44	597601	PREPARE AND STAIN CONCRETE	860	SQFT		
45	720123	ROCK SLOPE PROTECTION (1/4 T, METHOD A)	1250	CY		
46	721026	ROCK SLOPE PROTECTION (NO. 1, METHOD B)	640	CY		
47	721040	GRAVEL FILTER	240	CY		
48	729011	ROCK SLOPE PROTECTION FABRIC (CLASS 8)	660	SQYD		
49	729020	TEMPORARY ROCK SLOPE PROTECTION FABRIC (CLASS 8)	1640	SQYD		
50	800001	FENCE (TYPE BM, METAL POST)	1020	LF		
51	810110	SURVEY MONUMENT	7	EA		
52	820134	OBJECT MARKER (TYPE P)	4	EA		

53	820151	OBJECT MARKER (TYPE L-1)	5	EA		
54	833100	TUBULAR BICYCLE RAILING	275	LF		
55	839543	TRANSITION RAILING (TYPE WB-31)	3	EA		
56	839584	ALTERNATIVE IN-LINE TERMINAL SYSTEM	1	EA		
57	839585	ALTERNATIVE FLARED TERMINAL SYSTEM	2	EA		
58	839607	CRASH CUSHION (TYPE TRACC)	1	EA		
59	839720(F)	CONCRETE BARRIER (TYPE 732)	275	LF		
60	840653	PAINT TRAFFIC STRIPE	970	LF		
61	999990	MOBILIZATION	1	LS	LUMP SUM	
					Total Bid	

(F) is the designation for final pay items as defined in the General Conditions

Name of Bidder_____

Signature of Bidder_____

Printed Name and Title_____

Date_____

DESIGNATION OF SUBCONTRACTORS

In accordance with the provisions of Public Contract Code section 4100 et seq., the undersigned Bidder sets forth the following:

a. The name, location of the place of business, and California contractors license number of each subcontractor who will perform work or labor, or render service to the undersigned Prime Contractor in or about the construction of the work or improvement, or a

subcontractor licensed by the State of California who, under subcontract to the Prime Contractor, specially fabricates and installs a portion of the work or improvement according to detailed drawings contained in the plans and specifications, in an amount in excess of one-half of one percent of the undersigned Prime Contractor's Total Bid or in the case of bids for the construction of streets and highways, including bridges, in excess of one-half of one percent or ten thousand dollars ($10,000), whichever is greater.*

b. The portion of the work which will be done by each such subcontractor. Only one subcontractor shall be listed for each such portion. If the subcontractor is not performing all of the work under the bid item number(s) listed for that subcontractor, the bidder shall set forth the portion of the work relating to said bid item number(s) that will be done by the subcontractor.

Item No. on Bid Item List	Description of Trade/Portion of Work	Subcontractor Name	License No.	Business Address	Percent of Total Bid

By:_____
(Bidder's Company Name)

*NOTE: When there is a failure to list a subcontractor as required, or when the Bidder lists two subcontractor for the same portion of the work, the law provides that the Bidder agrees that Bidder is fully qualified to perform that portion itself, and that the Bidder shall perform that portion itself. In such case, Bidder must be authorized to perform said work. Any Bid not complying with the provisions hereof may be rejected.

DBE COMMITMENT

NOTE: PLEASE REFER TO INSTRUCTIONS ON THE NEXT PAGE

LOCAL AGENCY: COUNTY OF SAN LUIS OBISPO LOCATION: ARROYO GRANDE, CA

PROJECT DESCRIPTION: TAR SPRING CREEK BRIDGE ON BRNACH MILL ROAD

TOTAL CONTRACT AMOUNT: $ _____

BID DATE: _____

BIDDER'S NAME: _____

CONTRACT DBE GOAL: 2%

CONTRACT ITEM NO.	ITEM OF WORK AND DESCRIPTION OR SERVICES TO BE SUBCONTRACTED OR MATERIALS TO BE PROVIDED (or contracted if the bidder is a DBE)	DBE CERT NO. AND EXPIRATION DATE	NAME OF EACH DBE (Must be certified on the date bids are opened - include DBE address and phone number)	DOLLAR AMOUNT DBE

For Local Agency to Complete:

Local Agency Contract Number: 300385

Federal-aid Project Number: BRLO-5949(116)

Federal Share: _____

Contract Award Date: _____

Local Agency certifies that all DBE certifications have been verified and information is complete and accurate.

_____ _____ _____
Print Name Signature Date
Local Agency Representative

(Area Code) Telephone Number: _____

Total Claimed DBE Participation $_____ _____%

_____
Signature of Bidder

_____
Date (Area Code) Tel. No.

_____
Person to Contact (Please Type or Print)

DBE Commitment (Construction Contracts)
(Rev 6/26/09)

DBE COMMITMENT INSTRUCTIONS

PLEASE NOTE: This information must be submitted with your Bid.

The form requires specific information regarding the construction contract: Location, Project Description, Total Contract Amount, Bid Date, Bidder's Name, and Contract DBE Goal.

The form has a column for the Contract Item Number and Item of Work and Description or Services to be Subcontracted or Materials to be provided by DBEs. Bidders shall indicate all work to be performed by DBEs including, if the prime is a DBE, work performed by its own forces, if a DBE. The DBE shall provide a certification number and expiration date to the Bidder. Enter the DBE prime's and subcontractors' certification numbers.The form has a column for the Names of DBE contractors to perform the work (who must be certified on the date bids are opened and include the DBE address and phone number).

IMPORTANT: Identify all DBE firms participating in the project regardless of tier. Names of the First-Tier DBE Subcontractors and their respective item(s) of work listed should be consistent, where applicable, with the names and items of work in the *Designation of Subcontractors* form submitted with your Bid.

There is a column for the DBE participation dollar amount. Enter the Total Claimed DBE Participation dollars and percentage amount of items of work submitted with your Bid pursuant to the Special Provisions. (If 100% of item is not to be performed or furnished by the DBE, describe exact portion of time to be performed or furnished by the DBE.) See "Disadvantaged Business Enterprise (DBE)," of the Instruction to Bidders, to determine how to count the participation of DBE firms.

This form must be signed and dated by the person bidding. Also list a phone number in the space provided and print the name of the person to contact.

DBE INFORMATION – GOOD FAITH EFFORTS

Federal-aid Project No. BRLO-5949(116) Bid Opening Date _____

The County of San Luis Obispo established a Disadvantaged Business Enterprise (DBE) goal of 2% for this project. The information provided herein shows that a good faith effort was made.

The lowest, second lowest, and third lowest Bidders shall submit the following information to document adequate good faith efforts. Bidders should submit the following information even if the *DBE Commitment* form indicates that the bidder has met the DBE goal. This will protect the Bidder's eligibility for award of the Contract if County determines that the Bidder failed to meet the goal for various reasons, e.g., a DBE firm was not certified at Bid opening, or the Bidder made a mathematical error.

Submittal of only the *DBE Commitment* form may not provide sufficient documentation to demonstrate that adequate good faith efforts were made.

The following items are listed in the section "Good Faith Efforts Submittal" of the Instructions to Bidders:

A. The names and dates of each publication in which a request for DBE participation for this project was placed by the bidder (please attach copies of advertisements or proofs of publication):

Publications	Dates of Advertisement

B. The names and dates of written notices sent to certified DBEs soliciting bids for this project and the dates and methods used for following up initial solicitations to determine with certainty whether the DBEs were interested (please attach copies of solicitations, telephone records, fax confirmations, etc.):

Names of DBEs Solicited	Date of Initial Solicitation	Follow Up Methods and Dates

C. The items of work which the bidder made available to DBE firms including, where appropriate, any breaking down of the contract work items (including those items normally performed by the bidder with its own forces) into economically feasible units to facilitate DBE participation. It is the bidder's responsibility to demonstrate that sufficient work to facilitate DBE participation was made available to DBE firms.

Items of Work	Bidder Normally Performs Item (Y/N)	Breakdown of Items	Amount ($)	Percentage Of Contract

D. The names, addresses and phone numbers of rejected DBE firms, the reasons for the bidder's rejection of the DBEs, the firms selected for that work (please attach copies of quotes from the firms involved), and the price difference for each DBE if the selected firm is not a DBE:

Items of Work	Name. Address, and Phone Number of rejected DBE	Resason for rejection of DBE	Name. Address, and Phone Number of selected firm	Price difference between DBE and selected firm

E. Efforts made to assist interested DBEs in obtaining bonding, lines of credit or insurance, and any technical assistance or information related to the plans, specifications and requirements for the work which was provided to DBEs:

_____

_____

_____

_____

F. Efforts made to assist interested DBEs in obtaining necessary equipment, supplies, materials or related assistance or services, excluding supplies and equipment the DBE subcontractor purchases or leases from the prime contractor or its affiliate:

_____

_____

_____

_____

G. The names of agencies, organizations or groups contacted to provide assistance in contacting, recruiting and using DBE firms (please attach copies of requests to agencies and any responses received, i.e., lists, Internet page download, etc.):

Name of Agency/Organization	Method/Date of Contact	Results

H. Any additional data to support a demonstration of good faith efforts (use additional sheets if necessary):

_____

_____

_____

_____

Signed: _____

Printed Name: _____

Company and Title: _____

Date: _____

NOTE: USE ADDITIONAL SHEETS OF PAPER IF NECESSARY.

BIDDER'S LIST OF SUBCONTRACTORS (DBE AND NON-DBE)

The Bidder shall list all subcontractors (both DBE and non-DBE) in accordance with the Instructions to Bidders and per Title 49, Section 26.11 of the Code of Federal Regulations. This listing is required in addition to listing DBE Subcontractors elsewhere in the proposal. Photocopy this form for additional firms.

Firm Name/ Address/ City, State, ZIP	Phone/ Fax E-mail	Annual Gross Receipts	Description of Portion of Work to be Performed	Certified DBE?	Firm Being Used?
Name	*Phone*	☐ < $1 million		☐YES	☐YES
		☐ < $5 million		☐NO	☐NO
Address	*Fax*	☐ < $10 million		*If YES list DBE #:*	
		☐ < $15 million			
City State ZIP	*E-mail*	☐ > $15 million		Age of Firm (Yrs.)	
Name	*Phone*	☐ < $1 million		☐YES	☐YES
		☐ < $5 million		☐NO	☐NO
Address	*Fax*	☐ < $10 million		*If YES list DBE #:*	
		☐ < $15 million			
City State ZIP	*E-mail*	☐ > $15 million		Age of Firm (Yrs.)	
Name	*Phone*	☐ < $1 million		☐YES	☐YES
		☐ < $5 million		☐NO	☐NO
Address	*Fax*	☐ < $10 million		*If YES list DBE #:*	
		☐ < $15 million			
City State ZIP	*E-mail*	☐ > $15 million		Age of Firm (Yrs.)	
Name	*Phone*	☐ < $1 million		☐YES	☐YES
		☐ < $5 million		☐NO	☐NO
Address	*Fax*	☐ < $10 million		*If YES list DBE #:*	
		☐ < $15 million			
City State ZIP	*E-mail*	☐ > $15 million		Age of Firm (Yrs.)	

Note: None of the information requested on this form is material to the County's determination of which Bidder's Bid is the lowest responsive bid.

BIDDER'S LIST OF SUBCONTRACTORS (DBE AND NON-DBE) (continued)

Firm Name/ Address/ City, State, ZIP	Phone/ Fax E-mail	Annual Gross Receipts	Description of Portion of Work to be Performed	Certified DBE?	Firm Being Used?
Name	*Phone*	☐ < $1 million ☐ < $5 million		☐YES ☐NO	☐YES ☐NO
Address	*Fax*	☐ < $10 million ☐ < $15 million		*If YES list DBE #:*	
City State ZIP	*E-mail*	☐ > $15 million		Age of Firm (Yrs.)	
Name	*Phone*	☐ < $1 million ☐ < $5 million		☐YES ☐NO	☐YES ☐NO
Address	*Fax*	☐ < $10 million ☐ < $15 million		*If YES list DBE #:*	
City State ZIP	*E-mail*	☐ > $15 million		Age of Firm (Yrs.)	
Name	*Phone*	☐ < $1 million ☐ < $5 million		☐YES ☐NO	☐YES ☐NO
Address	*Fax*	☐ < $10 million ☐ < $15 million		*If YES list DBE #:*	
City State ZIP	*E-mail*	☐ > $15 million		Age of Firm (Yrs.)	
Name	*Phone*	☐ < $1 million ☐ < $5 million		☐YES ☐NO	☐YES ☐NO
Address	*Fax*	☐ < $10 million ☐ < $15 million		*If YES list DBE #:*	
City State ZIP	*E-mail*	☐ > $15 million		Age of Firm (Yrs.)	
Name	*Phone*	☐ < $1 million ☐ < $5 million		☐YES ☐NO	☐YES ☐NO
Address	*Fax*	☐ < $10 million ☐ < $15 million		*If YES list DBE #:*	
City State ZIP	*E-mail*	☐ > $15 million		Age of Firm (Yrs.)	

Note: None of the information requested on this form is material to the County's determination of which Bidder's Bid is the lowest responsive bid.

By: _____

(Bidder's signature, printed name, title and company name)

BIDDER'S EQUAL EMPLOYMENT OPPORTUNITY CERTIFICATION

The Bidder _____ hereby certifies that he/she has ___ , has not ____, participated in a previous contract or subcontract subject to the equal opportunity clauses, as required by Executive Orders 10925, 11114, or 11246, and that, where required, he/she has filed with the Joint Reporting Committee, the Director of the Office of Federal Contract Compliance, a Federal Government contracting or administering agency, or the former President's Committee on Equal Employment Opportunity, all reports due under the applicable filling requirements.

Company: _____

Signed: _____

Printed Name: _____

Title: _____

Date: _____

Note: The above certification is required by the Equal Employment Opportunity Regulations of the Secretary of Labor (41 CFR 60-1.7(b) (1)), and must be submitted by bidders and proposed subcontractors only in connection with contracts and subcontracts which are subject to the equal opportunity clause. Contracts and subcontracts which are exempt from the equal opportunity clause are set forth in 41 CFR 60-1.5. (Generally only contracts or subcontracts of $10,000 or under are exempt.)

Currently, Standard Form 100 (EEO-1) is the only report required by the Executive Orders or their implementing regulations.

Proposed prime contractors and subcontractors who have participated in a previous contract or subcontract subject to the Executive Orders and have not filed the required reports should note that 41 CFR 60-1.7(b) (1) prevents the award of contracts and subcontracts unless such contractor submits a report covering the delinquent period or such other period specified by the Federal Highway Administration or by the Director, Office of Federal Contract Compliance, U.S. Department of Labor.

SUBCONTRACTOR'S EQUAL EMPLOYMENT OPPORTUNITY CERTIFICATION

The proposed subcontractor _____ hereby certifies that he/she has ___ , has not _____, participated in a previous contract or subcontract subject to the equal opportunity clauses, as required by Executive Orders 10925, 11114, or 11246, and that, where required, he/she has filed with the Joint Reporting Committee, the Director of the Office of Federal Contract Compliance, a Federal Government contracting or administering agency, or the former President's Committee on Equal Employment Opportunity, all reports due under the applicable filling requirements.

Company: _____

Signed: _____

Printed Name: _____

Title: _____

Date: _____

Note: The above certification is required by the Equal Employment Opportunity Regulations of the Secretary of Labor (41 CFR 60-1.7(b) (1)), and must be submitted by bidders and proposed subcontractors only in connection with contracts and subcontracts which are subject to the equal opportunity clause. Contracts and subcontracts which are exempt from the equal opportunity clause are set forth in 41 CFR 60-1.5. (Generally only contracts or subcontracts of $10,000 or under are exempt.)

Currently, Standard Form 100 (EEO-1) is the only report required by the Executive Orders or their implementing regulations.

Proposed prime contractors and subcontractors who have participated in a previous contract or subcontract subject to the Executive Orders and have not filed the required reports should note that 41 CFR 60-1.7(b) (1) prevents the award of contracts and subcontracts unless such contractor submits a report covering the delinquent period or such other period specified by the Federal Highway Administration or by the Director, Office of Federal Contract Compliance, U.S. Department of Labor.

CERTIFICATION OF NON-SEGREGATED FACILITIES

FEDERALLY ASSISTED PROJECTS

The federally assisted construction contractor certifies that he/she does not maintain or provide for his/her employees any segregated facilities at any of his/her establishments, and that he/she does not permit his/her employees to perform their services at any location, under his/her control, where segregated facilities are maintained. The federally assisted construction contractor certifies further that he/she will not maintain or provide for his/her employees any segregated facilities at any of his/her establishments, and that he/she will not permit his/her employees to perform their services at any location, under his/her control, where segregated facilities are maintained. The federally assisted construction contractor agrees that a breach of this certification is a violation of the Equal Opportunity clause in this contract. As used in this certification, the term "segregated facilities" means any waiting rooms, work areas, restrooms and washrooms, restaurants and other eating areas, timeclocks, locker rooms and other storage or dressing areas, parking lots, drinking fountains, recreation or entertainment areas, transportation, and housing facilities provided for employees which are segregated by explicit directive or are in fact segregated on the basis of race, creed, color, or national origin, because of habit, local custom, or otherwise. The federally assisted construction contractor agrees that (except where he/she has obtained identical certifications from proposed subcontractors for specific time periods) he/she will obtain identical certifications from proposed subcontractors prior to the award of subcontracts exceeding $10,000 which are not exempt from the provisions of the Equal Opportunity clause, and that he/she will retain such certifications in his/her files.

Company: _____

Signed: _____

Printed Name: _____

Title: _____

Date: _____

Note: The penalty for making false statements in offers is prescribed in 18 U.S.C. 1001.

DECLARATION OF NONCOLLUSION

In accordance with Title 23 United States Code Section 112 and Public Contract Code Section 7106, the Bidder declares as follows:

I am the _____ [title] of _____ [name of Bidder], the party making the foregoing Bid. The Bid is not made in the interest of, or on behalf of, any undisclosed person, partnership, company, association, organization, or corporation. The Bid is genuine and not collusive or sham. The Bidder has not directly or indirectly induced or solicited any other Bidder to put in a false or sham Bid. The Bidder has not directly or indirectly colluded, conspired, connived, or agreed with any Bidder or anyone else to put in a sham Bid, or to refrain from bidding. The Bidder has not in any manner, directly or indirectly, sought by agreement, communication, or conference with anyone to fix the bid price of the Bidder or any other Bidder, or to fix any overhead, profit, or cost element of the Bid price, or of that of any other Bidder. All statements contained in the Bid are true. The Bidder has not, directly or indirectly, submitted his or her Bid price or any breakdown thereof, or the contents thereof, or divulged information or data relative thereto, to any corporation, partnership, company, association, organization, bid depository, or to any member or agent thereof, to effectuate a collusive or sham bid, and has not paid, and will not pay, any person or entity for such purpose. Any person executing this declaration on behalf of a Bidder that is a corporation, partnership, joint venture, limited liability company, limited liability partnership, or any other entity, hereby represents that he or she has full power to execute, and does execute, this declaration on behalf of the Bidder.

I declare under penalty of perjury under the laws of the State of California that the foregoing is true and correct and that this declaration is executed on:

_____ [date], at _____ [city], _____ [state].

Signed: _____

Print Name: _____

If the Bidder fails to complete and properly sign this declaration, the Bid will be considered non-responsive and will be rejected.

DEBARMENT AND SUSPENSION CERTIFICATION

TITLE 49, CODE OF FEDERAL REGULATIONS, PART 29

The Bidder, under penalty of perjury, certifies that, except as noted below, he/she or any other person associated therewith in the capacity of owner, partner, director, officer, manager:

- Is not currently under suspension, debarment, voluntary exclusion, or determination of ineligibility by any federal agency;
- Has not been suspended, debarred, voluntarily excluded or determined ineligible by any federal agency within the past 3 years;
- Does not have a proposed debarment pending; and
- Has not been indicted, convicted, or had a civil judgment rendered against it by a court of competent jurisdiction in any manner involving fraud or official misconduct within the past 3 years.

If there are any exceptions to this certification, insert the exceptions below. Exceptions will not necessarily result in denial of award, but will be considered in determining bidder responsibility. For any exception noted, indicate to whom it applies, the initiating agency, and dates of action.

_____

_____

_____

_____

_____

Company: _____

Signed: _____

Printed Name: _____

Title: _____

Date: _____

Note: Providing false information may result in criminal prosecution or administrative sanctions. The above certification is part of the Proposal.

PUBLIC CONTRACT CODE SECTION 10162 QUESTIONNAIRE

The bidder shall complete, under penalty of perjury, the following questionnaire:

Has the bidder, any officer of the bidder, or any employee of the bidder who has a proprietary interest in the bidder, ever been disqualified, removed, or otherwise prevented from bidding on, or completing a federal, state, or local government project because of a violation of law or a safety regulation?

Yes _____ No _____

If the answer is yes, explain the circumstances in the following space.

_____

_____

_____

_____

_____

_____

_____

_____

I declare under penalty of perjury under the laws of the State of California that the foregoing is true and correct.

Company: _____

Signed: _____

Printed Name: _____

Title: _____

Date: _____

PUBLIC CONTRACT CODE SECTION 10232 STATEMENT

The bidder, hereby states under penalty of perjury, that no more than one final unappealable finding of contempt of court by a federal court has been issued against the Contractor within the immediately preceding two-year period because of the bidder's failure to comply with an order of a federal court which orders the bidder to comply with an order of the National Labor Relations Board.

I declare under penalty of perjury under the laws of the State of California that the foregoing is true and correct:

Company: _____

Signed: _____

Printed Name: _____

Title: _____

Date: _____

PUBLIC CONTRACT CODE SECTION 10285.1 STATEMENT

The bidder hereby declares under penalty of perjury under the laws of the State of California that the bidder has ____, has not ____ been convicted within the preceding three years of any offenses referred to in that section, including any charge of fraud, bribery, collusion, conspiracy, or any other act in violation of any state or Federal antitrust law in connection with the bidding upon, award of, or performance of, any public works contract, as defined in Public Contract Code Section 1101, with any public entity, as defined in Public Contract Code Section 1100, including the Regents of the University of California or the Trustees of the California State University. The term "bidder" is understood to include any partner, member, officer, director, responsible managing officer, or responsible managing employee thereof, as referred to in Section 10285.1.

Note: The bidder must place a check mark after "has" or "has not" in one of the blank spaces provided.

Bidders are cautioned that making a false certification may subject the certifier to criminal prosecution.

I declare under penalty of perjury under the laws of the State of California that the foregoing is true and correct:

Company: _____

Signed: _____

Printed Name: _____

Title: _____

Date: _____

IRAN CONTRACTING ACT CERTIFICATION

(Public Contract Code section 2200 *et seq.*)

As required by California Public Contract Code section 2204, the Contractor certifies subject to penalty for perjury that the option checked below relating to the Contractor's status in regard to the Iran Contracting Act of 2010 (Public Contract Code section 2200 et seq.) is true and correct:

☐ The Contractor is not:

(i) identified on the current list of persons and entities engaging in investment activities in Iran prepared by the California Department of General Services in accordance with subdivision (b) of Public Contract Code section 2203; or

(ii) a financial institution that extends, for 45 days or more, credit in the amount of $20,000,000 or more to any other person or entity identified on the current list of persons and entities engaging in investment activities in Iran prepared by the California Department of General Services in accordance with subdivision (b) of Public Contract Code section 2203, if that person or entity uses or will use the credit to provide goods or services in the energy sector in Iran.

☐ The County has exempted the Contractor from the requirements of the Iran Contracting Act of 2010 after making a public finding that, absent the exemption, the County will be unable to obtain the goods and/or services to be provided pursuant to the Contract.

☐ The amount of the Contract payable to the Contractor for the Work does not exceed $1,000,000.

Company: _____

Signed: _____

Printed Name: _____

Title: _____

Date: _____

Note: In accordance with Public Contract Code section 2205, false certification of this form shall be reported to the California Attorney General and may result in civil penalties equal to the greater of $250,000 or twice the Contract Price, termination of the Contract and/or ineligibility to bid on contracts for three years.

NON-LOBBYING CERTIFICATION FOR FEDERAL-AID CONTRACTS

The prospective participant certifies, by signing and submitting their bid proposal, to the best of his or her knowledge and belief, that:

(1) No Federal appropriated funds have been paid or will be paid, by or on behalf of the undersigned, to any person for influencing or attempting to influence an officer or employee of any Federal agency, a Member of congress, an officer or employee of Congress, or an employee of a Member of Congress in connection with the awarding of any Federal contract, the making of any Federal grant, the making of any Federal loan, the entering into of any cooperative agreement, and the extension, continuation, renewal, amendment, or modification of any Federal contract, grant, loan, or cooperative agreement.

(2) If any funds other than Federal appropriated funds have been paid or will be paid to any person for influencing or attempting to influence an officer or employee of any Federal agency, a Member of Congress, an officer or employee of Congress, or an employee of a Member of Congress in connection with this Federal contract, grant, loan, or cooperative agreement, the undersigned shall complete and submit Standard Form-LLL, "Disclosure of Lobbying Activities," in accordance with its instructions.

This certification is a material representation of fact upon which reliance was placed when this transaction was made or entered into. Submission of this certification is a prerequisite for making or entering into this transaction imposed by Section 1352, Title 31, U.S. Code. Any person who fails to file the required certification shall be subject to a civil penalty of not less than $10,000 and not more than $100,000 for each such failure.

The prospective participant also agrees by submitting his or her bid or proposal that he or she shall require that the language of this certification be included in all lower tier subcontracts, which exceed $100,000 and that all such subrecipients shall certify and disclose accordingly.

I declare under penalty of perjury under the laws of the State of California that the foregoing is true and correct:

Company: _____

Signed: _____

Printed Name: _____

Title: _____

Date: _____

DISCLOSURE OF LOBBYING ACTIVITIES

COMPLETE THIS FORM TO DISCLOSE LOBBYING ACTIVITIES PURSUANT TO 31 U.S.C. 1352

1. Type of Federal Action:
- ☐ a. contract
- b. grant
- c. cooperative agreement
- d. loan
- e. loan guarantee
- f. loan insurance

2. Status of Federal Action:
- ☐ a. bid/offer/application
- b. initial award
- c. post-award

3. Report Type:
- ☐ a. initial
- b. material change

For Material Change Only:
year _____ quarter _____
date of last report _____

4. Name and Address of Reporting Entity

☐ Prime ☐ Subawardee
Tier_____ , if known

Congressional District, if known

5. If Reporting Entity in No. 4 is Subawardee, Enter Name and Address of Prime:

Congressional District, if known

6. Federal Department/Agency:

7. Federal Program Name/Description:

CFDA Number, if applicable _____

8. Federal Action Number, if known:

9. Award Amount, if known:

10. a. Name and Address of Lobby Entity
(If individual, last name, first name, MI)

b. Individuals Performing Services (including address if different from No. 10a)
(last name, first name, MI)

(attach Continuation Sheet(s) if necessary)

11. Amount of Payment (check all that apply)
$_____ ☐ actual ☐ planned

12. Form of Payment (check all that apply):
- ☐ a. cash
- ☐ b. in-kind; specify: nature _____
  value _____

13. Type of Payment (check all that apply)
- ☐ a. retainer
- ☐ b. one-time fee
- ☐ c. commission
- ☐ d. contingent fee
- ☐ e deferred
- ☐ f. other, specify _____

14. Brief Description of Services Performed or to be performed and Date(s) of Service, including officer(s), employee(s), or member(s) contacted, for Payment Indicated in Item 11:

(attach Continuation Sheet(s) if necessary)

15. Continuation Sheet(s) attached: **Yes** ☐ **No** ☐

16. Information requested through this form is authorized by Title 31 U.S.C. Section 1352. This disclosure of lobbying reliance was placed by the tier above when his transaction was made or entered into. This disclosure is required pursuant to 31 U.S.C. 1352. This information will be reported to Congress semiannually and will be available for public inspection. Any person who fails to file the required disclosure shall be subject to a civil penalty of not less than $10,000 and not more than $100,000 for each such failure.

Signature: _____

Print Name: _____

Title: _____

Telephone No.: _____ Date: _____

Authorized for Local Reproduction
Standard Form - LLL

Federal Use Only:

Standard Form LLL Rev. 09-12-97

INSTRUCTIONS FOR COMPLETION OF SF-LLL, DISCLOSURE OF LOBBYING ACTIVITIES

This disclosure form shall be completed by the reporting entity, whether subawardee or prime Federal recipient, at the initiation or receipt of covered Federal action or a material change to previous filing pursuant to title 31 U.S.C. section 1352. The filing of a form is required for such payment or agreement to make payment to lobbying entity for influencing or attempting to influence an officer or employee of any agency, a Member of Congress an officer or employee of Congress or an employee of a Member of Congress in connection with a covered Federal action. Attach a continuation sheet for additional information if the space on the form is inadequate. Complete all items that apply for both the initial filing and material change report. Refer to the implementing guidance published by the Office of Management and Budget for additional information.

1. Identify the type of covered Federal action for which lobbying activity is and/or has been secured to influence, the outcome of a covered Federal action.
2. Identify the status of the covered Federal action.
3. Identify the appropriate classification of this report. If this is a follow-up report caused by a material change to the information previously reported, enter the year and quarter in which the change occurred. Enter the date of the last, previously submitted report by this reporting entity for this covered Federal action.
4. Enter the full name, address, city, state and zip code of the reporting entity. Include Congressional District if known. Check the appropriate classification of the reporting entity that designates if it is or expects to be a prime or subaward recipient. Identify the tier of the subawardee, e.g., the first subawardee of the prime is the first tier. Subawards include but are not limited to subcontracts, subgrants and contract awards under grants.
5. If the organization filing the report in Item 4 checks “Subawardee” then enter the full name, address, city, state and zip code of the prime Federal recipient. Include Congressional District, if known.
6. Enter the name of the Federal agency making the award or loan commitment. Include at least one organization level below agency name, if known. For example, Department of Transportation, United States Coast Guard.
7. Enter the Federal program name or description for the covered Federal action (item 1). If known, enter the full Catalog of Federal Domestic Assistance (CFDA) number for grants, cooperative agreements, loans and loan commitments.
8. Enter the most appropriate Federal identifying number available for the Federal action identification in item 1 (e.g., Request for Proposal (RFP) number, Invitation for Bid (IFB) number, grant announcement number, the contract grant. or loan award number, the application/proposal control number assigned by the Federal agency). Include prefixes, e.g., “RFP-DE-90-001.”
9. For a covered Federal action where there has been an award or loan commitment by the Federal agency, enter the Federal amount of the award/loan commitments for the prime entity identified in item 4 or 5.
10. (a) Enter the full name, address, city, state and zip code of the lobbying entity engaged by the reporting entity identified in item 4 to influenced the covered Federal action.
    (b) Enter the full names of the individual(s) performing services and include full address if different from 10 (c). Enter Last Name, First Name and Middle Initial (MI).
11. Enter the amount of compensation paid or reasonably expected to be paid by the reporting entity (item 4) to the lobbying entity (item 10). Indicate whether the payment has been made (actual) or will be made (planned). Check all boxes that apply. If this is a material change report, enter the cumulative amount of payment made or planned to be made.
12. Check the appropriate box(es). Check all boxes that apply. If payment is made through an in-kind contribution, specify the nature and value of the in-kind payment.
13. Check the appropriate box(es). Check all boxes that apply. If other, specify nature.
14. Provide a specific and detailed description of the services that the lobbyist has performed or will be expected to perform and the date(s) of any services rendered. Include all preparatory and related activity not just time spent in actual contact with Federal officials. Identify the Federal officer(s) or employee(s) contacted or the officer(s) employee(s) or Member(s) of Congress that were contacted.
15. Check whether or not a continuation sheet(s) is attached.
16. The certifying official shall sign and date the form; print his/her name title and telephone number.

Public reporting burden for this collection of information is estimated to average 30 minutes per response, including time for reviewing instruction, searching existing data sources, gathering and maintaining the data needed, and completing and reviewing the collection of information. Send comments regarding the burden estimate or any other aspect of this collection of information, including suggestions for reducing this burden, to the Office of Management and Budget, Paperwork Reduction Project (0348-0046), Washington, D.C. 20503.

BIDDER'S BOND

KNOW ALL BY THESE PRESENTS:

That we, _____

_____

as Principal, and _____

_____,

as Surety, are held and firmly bound unto the County of San Luis Obispo, State of California (hereinafter called "County") in the penal sum of Ten Percent (10%) of the total aggregate amount of the bid of the Principal above named, submitted by said Principal to the County for the work described below, for the payment of which sum in lawful money of the United States, well and truly to be made, we bind ourselves, our heirs, executors, administrators and successors, jointly and severally, firmly by these presents. In no case shall the liability of the Surety hereunder exceed the sum of _____

_____ ($_____).

THE CONDITION OF THIS OBLIGATION IS SUCH,

That whereas a bid to County for certain construction specifically described as follows, for which bids are to be opened on _____, 20_____, has been submitted by Principal to County for:

TAR SPRING CREEK BRIDGE ON BRANCH MILL ROAD

CONTRACT NO. 300385

FEDERAL AID PROJECT NO. BRLO-5949(116)

NOW, THEREFORE, the penal sum guaranteed by this bond shall be forfeited to the County in the event of any of the following:

(1) The aforesaid Principal withdraws said bid after the time fixed in the Notice of Bidders for the opening of bids; or,

(2) Principal fails to provide the County within the time(s) specified in the aforesaid contract documents all of the completed DBE documents required to perfect the Principal's bid before the contract is awarded; or

(3) Principal fails, within ten (10) business days after receipt of written notice that the contract has been awarded to Principal, to, enter into a written contract with County, in the prescribed form, in accordance with the bid as accepted, and file with the County the certificates of insurance as stipulated in Section 7-1.06 of the General Conditions and the two bonds (in the prescribed forms), one to guarantee faithful performance and the other to guarantee payment for labor and materials.

Surety, for value received, hereby stipulates and agrees that no change, extension of time, alteration or addition to the terms of said contract or to the work to be performed thereunder or the specifications accompanying the same shall in any manner affect its obligations on this bond, and it does hereby waive notice of any such change, extension, alteration, or addition.

In the event suit is brought upon said bond by County and judgment is recovered, the Surety shall pay all costs incurred by County in such suit, including a reasonable attorney's fee to be fixed by the court. Death of the Principal shall not relieve Surety of its obligations hereunder.

IN WITNESS WHEREOF, we have hereunto set our hands and seals on this _____

day

of_____, 20_____.

_____ (Seal)

_____ (Seal)

_____ (Seal)

Principal

_____ (Seal)

_____ (Seal)

_____ (Seal)

Surety

_____

_____

Address

NOTE:

Signatures of those executing for Surety must be properly acknowledged.

COUNTY OF SAN LUIS OBISPO

DEPARTMENT OF PUBLIC WORKS AND TRANSPORTATION

AGREEMENT

FOR

TAR SPRING CREEK BRIDGE ON BRANCH MILL ROAD

CONTRACT NO. 300385

FEDERAL AID PROJECT NO. BRLO-5949(116)

COUNTY OF SAN LUIS OBISPO

AGREEMENT

THIS AGREEMENT, made and entered into this _____ day of _____, 20_____,

between the County of San Luis Obispo, a political subdivision and county of the State of California, party of the first part, hereinafter called "County" and _____

the party of the second part, hereinafter called "Contractor".

WITNESSETH, that for and in consideration of the mutual covenants and agreements hereinafter contained, the parties hereto agree as follows:

ARTICLE 1 WORK

The Contractor shall, at its own proper cost and expense, do all the work and furnish all the equipment and materials necessary to construct and complete in good and workmanlike manner to the satisfaction of the Board of Supervisors of said County, for

TAR SPRING CREEK BRIDGE ON BRANCH MILL ROAD

CONTRACT NO. 300385

FEDERAL AID PROJECT NO. BRLO-5949(116)

all in strict accordance with the Contract Documents.

ARTICLE 2 CONTRACT

This Agreement, together with all other Contract Documents, including without limitation Notice to Bidders, Instructions to Bidders, Bid Forms, General Conditions, Specifications, Appendices, Plans, and all addenda thereto, form the Contract, and said documents by this reference become as fully a part of this Agreement as if set forth in full and are herein sometimes referred to as “Contract” or as “Contract Documents”.

ARTICLE 3 CONTRACT TIME AND LIQUIDATED DAMAGES

The Contractor shall begin work within ten (10) working days from the date of receipt of County's Notice to Proceed.

This work shall be diligently prosecuted to completion before the expiration of 85 working days from the date of receipt of the Notice to Proceed.

It is agreed by the parties to the contract that in the case all the work called for under the contract in all parts and requirements is not finished or completed within the number of working days as set forth in these General Conditions, damage will be sustained by the County of San Luis Obispo, and that it is and will be impractical and extremely difficult to ascertain and determine the actual damage which the County will sustain in the event of and by reason of such delay; and it is therefore agreed that the Contractor will pay to the County of San Luis Obispo the sum of TWO THOUSAND DOLLARS ($2000.00) per day for each and every calendar days delay in finishing the work in excess of the number of working days prescribed above as liquidated and agreed damages; and the Contractor agrees to pay said liquidated damages herein provided for, and further agrees that the County may deduct the amount thereof from any moneys due or that may become due the Contractor under the contract.

ARTICLE 4 CONTRACT PRICE

The Contract Price is the total aggregate amount of the Contractor’s bid price based on the estimated quantities listed in the Bid Item List as set forth in the award of the Contract approved by the County’s Board of Supervisors. The estimated quantities listed in the Bid Item List will not govern final payment. The Contractor will receive and accept and the County will pay the Unit Prices and lump sum prices only for actual quantities of installed items constructed in accordance with the Contract Documents specified in the attached Bid Item List, which is incorporated herein by reference as Exhibit A, as full compensation

for the Contractor's full performance of the Contract including furnishing all labor, materials, and equipment for doing all the work contemplated and embraced in this Agreement. Upon completion of the Work, if the actual installed quantities show either an increase or decrease from the estimated quantities in the Bid, the Contract Unit Prices (including lump sum prices) will prevail except as otherwise specified in the Contract Documents.

To the extent permitted by law, the Contractor assumes during the progress of the work and before its acceptance, any and all loss or damage arising out of the nature of the work aforesaid or from the action of the elements, or from any unforeseen difficulties or obstructions which may arise or be encountered in the prosecution of the work until its acceptance by the County; and assumes any and all expenses incurred by or in consequence of the suspension or discontinuance of work, for well and faithfully completing the work, and the whole thereof, in the manner and to the requirements of the Contract Documents.

ARTICLE 5 SUBCONTRACTING

The Contractor's is directed to the provisions of the "Subletting and Subcontracting Fair Practices Act" set forth in Sections 4100-4114 of the Public Contract Code.

ARTICLE 6 FINAL PAYMENT

Final payment for the work performed under this Contract shall be made as specified in Section 9-1.17, "Final Payment," of the General Conditions and no payment shall be construed to be an acceptance of any defective work or improper materials. The Contractor further agrees that acceptance by the Contractor of the final payment due under this Contract, and the adjustment and payment of his/her bill rendered for any work done in accordance with any amendments of this Contract, shall be and shall operate as a release to the County of San Luis Obispo from any and all claims or liabilities on account of work performed under this Contract except claims for which written notice of claim has been properly provided to the County in accordance with the claims procedures set forth in the General Conditions. Besides guarantees required elsewhere, the Contractor shall and does hereby guarantee all workmanship and material and will correct any defects in the work for a period of one year from and after both the date of acceptance of the work and the recordation of the notice of completion by the County and shall repair or replace any or all work and material, together with any other portions of the work which may be displaced in so doing, that in the opinion of the County is or becomes defective during the period of said guarantee without expense whatsoever to the County. It is mutually agreed between the parties hereto, that no certificate given or payments made under this Contract, including final payment, shall be evidence of the performance of this Contract, either wholly or in part, against any claim of the Contractor.

ARTICLE 7 CONTRACTOR'S REPRESENTATIONS

The Contractor hereby declares that he/she has read the Contract Documents pertaining to the work to be accomplished hereunder, has carefully examined the plans and detail drawings of the work to be performed and fully understands the intent and meaning of the same.

It is further stipulated and agreed that the Contractor shall keep himself/herself fully informed of all laws, ordinances, and regulations which do or may affect the conduct of the work, the materials used therein or persons engaged or employed thereupon and all such orders of bodies and tribunals having any jurisdiction over the same. If it be found that the General Conditions, Special Provisions, or Standard Specifications for the work conflict with any such law, ordinance or regulation the Contractor shall immediately report same to the Public Works Director in writing. The Contractor shall at all times observe and comply with and shall cause all his/her agents, employees, and independent contractors hired by the Contractor to observe and comply with all such existing and future laws, ordinances, regulations, or decrees.

ARTICLE 8 APPRENTICES

Attention is directed to the provisions in Sections 1777.5, 1777.6, and 1777.7 of the Labor Code concerning the employment of apprentices by the Contractor or any subcontractor.

The Contractor and any subcontractor shall comply with the requirements of Sections 1777.5, 1777.6, and 1777.7 of the Labor Code in the employment of apprentices.

To insure compliance and complete understanding of the law relating to apprentices, and specifically the required ratio thereunder, each contractor or subcontractor should, where some question exists, contact the Division of Apprenticeship Standards, 455 Golden Gate Avenue, San Francisco, California, or one of its branch offices prior to commencement of work on this Contract. Responsibility for compliance with said Labor Code Sections lies with the prime contractor.

ARTICLE 9 PAYROLL RECORDS

Attention is directed to the provisions in Section 1776 of the Labor Code and Section 7-1.02K(3), "Certified Payroll Records," of the General Conditions concerning Contractor and Subcontractor payroll records.

The Contractor and any Subcontractor shall comply with the requirements of Section 1776 of the Labor Code and section 7-1.02K(3), "Certified Payroll Records," of the General Conditions.

ARTICLE 10 EQUAL EMPLOYMENT OPPORTUNITY

During the performance of this Contract, the Contractor agrees to comply with all of the Equal Employment Opportunity provisions of Executive Order No. 11246 of September 24, 1965, as amended by Executive Order 11375 of October 13, 1967, and as supplemented in Department of Labor regulations (41 CFR Chapter 60), including the following:

1. The Contractor will not discriminate against any employee or applicant for employment because of race, color, religion, sex, or national origin. The Contractor will take affirmative action to ensure that applicants are employed, and that employees are treated during employment without regard to their race, color, religion, sex, or national origin. Such action shall include, but not be limited to the following: employment, upgrading, demotion or transfer, recruitment or recruitment advertising, layoffs or termination, rates of pay or other forms of compensation, and selection for training, including apprenticeship. The Contractor agrees to post in conspicuous places, available to employees and applicants for employment, notices to be provided by the Department of Public Works setting forth the provisions of this nondiscrimination clause.

2. The Contractor will, in all solicitations or advertisements for employees placed by or on behalf of the Contractor, state that all qualified applicants will receive consideration for employment without regard to race, color, religion, sex, or national origin.

3. The Contractor will send to each labor union or representative of workers with which he/she has a collective bargaining agreement or other contract or understanding, a notice, to be provided by the Department of Public Works, advising the said labor union or worker's representative of the Contractor's commitments under this Article and shall post copies of the Notice in conspicuous places available to employees and applicants for employment.

4. The Contractor will comply with all provisions of Executive Order 11246 of September 24, 1965, and of the rules, regulations (41 CFR, Part 60) and relevant orders of the Secretary of Labor.

5. The Contractor will furnish all information and reports required by Executive Order 11246 of September 24, 1965, and by rules, regulations, and orders of the Secretary of Labor, or pursuant thereto, and will permit access to his books, records, and accounts by the County of San Luis Obispo and the Secretary of Labor for purposes of investigation to ascertain compliance with such rules, regulations, and orders.

6. In the event of the Contractor's noncompliance with the nondiscrimination clauses of this contract or with any of the said rules, regulations or orders, this contract may be cancelled, terminated or suspended in whole or in part and the Contractor may be declared ineligible for further government contracts or federally assisted construction contracts in accordance with procedures authorized in Executive Order 11246 of September 24, 1965, and such other sanctions may be imposed and remedies invoked as provided in Executive Order 11246 of September 24, 1965, or by rule, regulation or order of the Secretary of Labor, or as otherwise provided by law.

7. The Contractor will include the provisions of this Article in every subcontract or purchase order unless exempted by rules, regulations, or orders of the Secretary of Labor issued pursuant to Section 204 of Executive Order 11246 of September 24, 1965, so that such provisions will be binding upon each subcontractor or vendor. The Contractor will take such action with respect to any subcontract or

purchase order as the Public Works Director or the Secretary of Labor may direct as a means of enforcing such provisions including sanctions for noncompliance: provided, however, that in the event a contractor becomes involved in, or is threatened with litigation with a subcontractor or vendor as a result of such direction by the Secretary of Labor, the Contractor may request the United States to enter into such litigation to protect the interests of the United States.

ARTICLE 11 SAFETY

All work conducted by the Contractor and/or Subcontractors in the execution of this Contract shall be in accordance with current CAL OSHA requirements and Section 7-1.02K(6), "Occupational Safety and Health Standards," of the General Conditions

ARTICLE 12 COPELAND ANTI-KICKBACK ACT

During performance of this Contract, the Contractor agrees to comply with the Copeland Anti-Kickback Act (18 USC 874) as supplemented in the Department of Labor regulations (29 CFR Part 3). This act provides that the Contractor shall be prohibited from inducing any person employed in the construction, completion, or repair of public facilities to give up any part of the compensation which they are otherwise entitled.

ARTICLE 13 EMISSIONS REDUCTION

During the performance of this Contract, Contractor agrees to comply with Emissions Reduction.

Submit to the County the following certification before performing the work:

> I am aware of the emissions reduction regulations being mandated by the California Air Resources Board. I will comply with such regulations before commencing the performance of the work and maintain compliance throughout the duration of this Contract.

Contract signing constitutes submittal of this certification.

ARTICLE 14 BONDS

In case suit is brought upon Contractor's payment or performance bond, then said surety will pay a reasonable attorneys' fee to be fixed by the court. Contractor and surety agree that neither the payment bond nor the performance bond shall be considered a part of the Contract. Contractor and surety further agree that the payment and performance bonds are separate obligations of the Contractor and its surety, and that any attorneys' fee provision contained in the payment and performance bonds shall not apply to the Contract. In the event there is any litigation between the parties arising from the breach of the Contract, each party will bear its own attorneys' fees in the litigation.

ARTICLE 15 ATTORNEYS FEES

No provisions of the Contract Documents provide either the Contractor or the County the right to be awarded any attorney's fees and/or costs under Civil Code section 1717 in any legal action brought by either party to enforce any provision of the Contract Documents against the other party. The parties agree that any references to attorney's fees in language describing indemnification obligations do not constitute a contractual provision that would provide either the Contractor or the County the right to be awarded any attorney's fees and/or costs under Civil Code section 1717 in any legal action brought by either party to enforce any provision of the Contract Documents against the other party. Any other language in the Contract Documents providing for a recovery of attorney's fees shall be strictly construed as not including the recovery of any attorney's fees incurred by either Contractor or County in any legal action brought by either party to enforce any provision of the Contract Documents against the other party.

The parties agree that the Contract Documents contain no provisions that would allow either the Contractor or the County to be awarded attorney's fees and/or costs under Civil Code section 1717. Nothing in this Article affects any right by Contractor or County to recover attorney's fees or costs by operation of any law other than Civil Code section 1717.

In the event of any conflict between language in this Article and any other language in the Contract Documents, the language in this Article shall prevail.

ARTICLE 16 FORM FHWA-1273 REQUIREMENTS

Federal form FHWA-1273 is included in the Agreement as Exhibit B, and is incorporated herein by reference.

ARTICLE 17 TITLE VI ASSURANCES

During the performance of this Agreement, the Contractor, for itself, its assignees and successors in interest (hereinafter collectively referred to as Contractor) agrees as follows:

1. Compliance with Regulations: Contractor shall comply with the regulations relative to nondiscrimination in federally assisted programs of the Department of Transportation, Title 49, Code of Federal Regulations, Part 21, as they may be amended from time to time, (hereinafter referred to as the Regulations), which are herein incorporated by reference and made a part of this Agreement.

2. Nondiscrimination: Contractor, with regard to the work performed by it during the Agreement, shall not discriminate on the grounds of race, color, sex, national origin, religion, age, or disability in the selection and retention of sub-applicants, including procurements of materials and leases of equipment. Contractor shall not participate either directly or indirectly in the discrimination prohibited by Section 21.5 of the Regulations, including employment practices when the agreement covers a program set forth in Appendix B of the Regulations.

3. Solicitations for Sub-agreements, Including Procurements of Materials and Equipment: In all solicitations either by competitive bidding or negotiation made by Contractor for work to be performed under a Sub-agreement, including procurements of materials or leases of equipment, each potential sub-applicant or supplier shall be notified by Contractor of the Contractor's obligations under this Agreement and the Regulations relative to nondiscrimination on the grounds of race, color, or national origin.

4. Information and Reports: Contractor shall provide all information and reports required by the Regulations, or directives issued pursuant thereto, and shall permit access to its books, records, accounts, other sources of information and its facilities as may be determined by the County, California Department of Transportation or FHWA to be pertinent to ascertain compliance with such Regulations or directives. Where any information required of Contractor is in the exclusive possession of another who fails or refuses to furnish this information, Contractor shall so certify to the County, California Department of Transportation or the FHWA as appropriate, and shall set forth what efforts Contractor has made to obtain the information.

5. Sanctions for Noncompliance: In the event of Contractor's noncompliance with the nondiscrimination provisions of this agreement, the County or California Department of Transportation shall impose such agreement sanctions as it or the FHWA may determine to be appropriate, including, but not limited to:

   a. withholding of payments to Contractor under the Agreement within a reasonable period of time, not to exceed ninety (90) days; and/or

   b. cancellation, termination or suspension of the Agreement, in whole or in part.

6. Incorporation of Provisions: Contractor shall include the provisions of paragraphs (1) through (6) in every sub-agreement, including procurements of materials and leases of equipment, unless exempt by the Regulations, or directives issued pursuant thereto.

Contractor shall take such action with respect to any sub-agreement or procurement as the County, California Department of Transportation or FHWA may direct as a means of enforcing such provisions including sanctions for noncompliance, provided, however, that, in the event Contractor becomes involved in, or is threatened with, litigation with a sub-applicant or supplier as a result of such direction, Contractor may request the California Department of Transportation enter into such litigation to protect the interests of the State, and, in addition, Contractor may request the United States to enter into such litigation to protect the interests of the United States.

The Contractor shall maintain records and submit reports documenting performance under this article.

ARTICLE 18 FAIR EMPLOYMENT PRACTICES

1. In the performance of this Agreement, Contractor will not discriminate against any employee for employment because of race, color, sex, sexual orientation, religion, ancestry or national origin, physical disability, medical condition, marital status, political affiliation, family and medical care leave, pregnancy leave, or disability leave. Contractor will take affirmative action to ensure that employees are treated during employment without regard to their race, sex, sexual orientation, color, religion, ancestry, or national origin, physical disability, medical condition, marital status, political affiliation, family and medical care leave, pregnancy leave, or disability leave. Such action shall include, but not be limited to, the following: employment; upgrading; demotion or transfer; recruitment or recruitment advertising; layoff or termination; rates of pay or other forms of compensation; and selection for training, including apprenticeship. Contractor shall post in conspicuous places, available to employees for employment, notices to be provided by the County setting forth the provisions of this article.

2. Contractor, its contractor(s) and all subcontractors shall comply with the provisions of the Fair Employment and Housing Act (Government Code Section 12900 et seq.), and the applicable regulations promulgated thereunder (California Code of Regulations, Title 2, Section 7285.0 et seq.). The applicable regulations of the Fair Employment and Housing Commission implementing Government Code, Section 12900(a-f), set forth in Chapter 5 of Division 4 of Title 2 of the California Code of Regulations are incorporated into this Agreement by reference and made a part hereof as if set forth in full. Each of the Contractor's contractors and all subcontractors shall give written notice of their obligations under this clause to labor organizations with which they have a collective bargaining or other agreements, as appropriate.

3. Contractor shall include the nondiscrimination and compliance provisions of this clause in all contracts and subcontracts to perform work under this Agreement.

4. Contractor will permit access to the records of employment, employment advertisements, application forms, and other pertinent data and records by the County, the California Department of Transportation, the State Fair Employment and Housing Commission, or any other agency of the State of California designated by California Department of Transportation, for the purposes of investigation to ascertain compliance with this article.

5. Remedies for Willful Violation:

   a. The County may determine a willful violation of the Fair Employment provision to have occurred upon receipt of a final judgment to that effect from a court in an action to which Contractor was a party, or upon receipt of a written notice from the Fair Employment and Housing Commission that it has investigated and determined that Contractor has violated the Fair Employment Practices Act and had issued an order under Labor Code Section 1426 which has become final or has obtained an injunction under Labor Code Section 1429.

   b For willful violation of this Fair Employment Provision, the County shall have the right to terminate this Agreement either in whole or in part, and any loss or damage sustained by the County in securing the goods or services thereunder shall be borne and paid for by Contractor and by the surety under the performance bond, if any, and the County may deduct from any moneys due or thereafter may become due to Contractor, the difference between the price named in the Agreement and the actual cost thereof to the County to cure Contractor's breach of this Agreement.

ARTICLE 19 CONTRACTORS LICENSE NOTICE

Contractors are required by law to be licensed and regulated by the Contractors State License Board which has jurisdiction to investigate complaints against contractors if a complaint regarding a patent act or omission is filed within four (4) years of the date of the alleged violation. A complaint regarding a latent act or omission pertaining to structural defects must be filed within ten (10) years of the date of the alleged violation. Any questions concerning a contractor may be referred to the Registrar, Contractors State License Board, P.O. Box 26000, Sacramento, California 95826.

ARTICLE 20 WORKERS COMPENSATION CERTIFICATION

In accordance with California Labor Code §§ 1860, 1861 and 3700, every Contractor will be required to secure the payment of compensation to its employees. By signing below, Contractor certifies as follows: "I am aware of the provisions of Section 3700 of the Labor Code, which require every employer to be insured against liability for workers' compensation or to undertake self-insurance in accordance with the provisions of that code, and I will comply with such provisions before commencing the performance of the Work of this Contract."

ARTICLE 21 COMPLIANCE WITH IMMIGRATION REFORM AND CONTROL ACT OF 1986

The Contractor is solely and exclusively responsible for employment of individuals for the Work of the Contract in conformity with the Immigration Reform and Control Act of 1986, 8 USC § 1101 et seq. (the "IRCA"), the Contractor shall also require that any subcontractor, person or entity employing labor in connection with any of the Work of the Contract shall so similarly comply with the IRCA.

IN WITNESS WHEREOF, the parties to these presents have hereunto set their hands the year and date first above written, being authorized thereto.

COUNTY OF SAN LUIS OBISPO

By:_____
Chairperson of the Board of Supervisors

Date:_____

ATTEST:
CLERK OF THE BOARD OF SUPERVISORS

By:_____
Deputy Clerk

Date:_____

APPROVAL RECOMMENDED
WADE HORTON

By:_____
Director of Public Works

Date: 2.17.2015

APPROVED AS TO FORM AND LEGAL EFFECT:

RITA L. NEAL
County Counsel

By:_____

Date: 2/17/15

CONTRACTOR

_____

By:_____

Date:_____

_____
Printed Name and Title (President/CEO/Vice President)
(If Contractor is a corporation, a partnership, or a joint venture, attach evidence of authority to sign)

By:_____

_____
Printed Name and Title(Secretary/Assistant Secretary/CFO/Assistant Treasurer)

Date:_____

Address for giving notices:

_____

_____

_____

EXHIBIT A - BID ITEM LIST

EXHIBIT B - FHWA-1273

Revised May 1, 2012

REQUIRED CONTRACT PROVISIONS
FEDERAL-AID CONSTRUCTION CONTRACTS

I. General
II. Nondiscrimination
III. Nonsegregated Facilities
IV. Davis-Bacon and Related Act Provisions
V. Contract Work Hours and Safety Standards Act Provisions
VI. Subletting or Assigning the Contract
VII. Safety: Accident Prevention
VIII. False Statements Concerning Highway Projects
IX. Implementation of Clean Air Act and Federal Water Pollution Control Act
X. Compliance with Governmentwide Suspension and Debarment Requirements
XI. Certification Regarding Use of Contract Funds for Lobbying

ATTACHMENTS

A. Employment and Materials Preference for Appalachian Development Highway System or Appalachian Local Access Road Contracts (included in Appalachian contracts only)

I. GENERAL

1. Form FHWA-1273 must be physically incorporated in each construction contract funded under Title 23 (excluding emergency contracts solely intended for debris removal). The contractor (or subcontractor) must insert this form in each subcontract and further require its inclusion in all lower tier subcontracts (excluding purchase orders, rental agreements and other agreements for supplies or services).

The applicable requirements of Form FHWA-1273 are incorporated by reference for work done under any purchase order, rental agreement or agreement for other services. The prime contractor shall be responsible for compliance by any subcontractor, lower-tier subcontractor or service provider.

Form FHWA-1273 must be included in all Federal-aid design-build contracts, in all subcontracts and in lower tier subcontracts (excluding subcontracts for design services, purchase orders, rental agreements and other agreements for supplies or services). The design-builder shall be responsible for compliance by any subcontractor, lower-tier subcontractor or service provider.

Contracting agencies may reference Form FHWA-1273 in bid proposal or request for proposal documents, however, the Form FHWA-1273 must be physically incorporated (not referenced) in all contracts, subcontracts and lower-tier subcontracts (excluding purchase orders, rental agreements and other agreements for supplies or services related to a construction contract).

2. Subject to the applicability criteria noted in the following sections, these contract provisions shall apply to all work performed on the contract by the contractor's own organization and with the assistance of workers under the contractor's immediate superintendence and to all work performed on the contract by piecework, station work, or by subcontract.

3. A breach of any of the stipulations contained in these Required Contract Provisions may be sufficient grounds for withholding of progress payments, withholding of final payment, termination of the contract, suspension / debarment or any other action determined to be appropriate by the contracting agency and FHWA.

4. Selection of Labor: During the performance of this contract, the contractor shall not use convict labor for any purpose within the limits of a construction project on a Federal-aid highway unless it is labor performed by convicts who are on parole, supervised release, or probation. The term Federal-aid highway does not include roadways functionally classified as local roads or rural minor collectors.

II. NONDISCRIMINATION

The provisions of this section related to 23 CFR Part 230 are applicable to all Federal-aid construction contracts and to all related construction subcontracts of $10,000 or more. The provisions of 23 CFR Part 230 are not applicable to material supply, engineering, or architectural service contracts.

In addition, the contractor and all subcontractors must comply with the following policies: Executive Order 11246, 41 CFR 60, 29 CFR 1625-1627, Title 23 USC Section 140, the Rehabilitation Act of 1973, as amended (29 USC 794), Title VI of the Civil Rights Act of 1964, as amended, and related regulations including 49 CFR Parts 21, 26 and 27; and 23 CFR Parts 200, 230, and 633.

The contractor and all subcontractors must comply with: the requirements of the Equal Opportunity Clause in 41 CFR 60-1.4(b) and, for all construction contracts exceeding $10,000, the Standard Federal Equal Employment Opportunity Construction Contract Specifications in 41 CFR 60-4.3.

Note: The U.S. Department of Labor has exclusive authority to determine compliance with Executive Order 11246 and the policies of the Secretary of Labor including 41 CFR 60, and 29 CFR 1625-1627. The contracting agency and the FHWA have the authority and the responsibility to ensure compliance with Title 23 USC Section 140, the Rehabilitation Act of 1973, as amended (29 USC 794), and Title VI of the Civil Rights Act of 1964, as amended, and related regulations including 49 CFR Parts 21, 26 and 27; and 23 CFR Parts 200, 230, and 633.

The following provision is adopted from 23 CFR 230, Appendix A, with appropriate revisions to conform to the U.S. Department of Labor (US DOL) and FHWA requirements.

1. Equal Employment Opportunity: Equal employment opportunity (EEO) requirements not to discriminate and to take affirmative action to assure equal opportunity as set forth under laws, executive orders, rules, regulations (28 CFR 35, 29 CFR 1630, 29 CFR 1625-1627, 41 CFR 60 and 49 CFR 27) and orders of the Secretary of Labor as modified by the provisions prescribed herein, and imposed pursuant to 23 U.S.C. 140 shall constitute the EEO and specific affirmative action standards for the contractor's project activities under this contract. The provisions of the Americans with Disabilities Act of 1990 (42 U.S.C. 12101 et seq.) set forth under 28 CFR 35 and 29 CFR 1630 are incorporated by reference in this contract. In the execution of this contract, the contractor

agrees to comply with the following minimum specific requirement activities of EEO:

a. The contractor will work with the contracting agency and the Federal Government to ensure that it has made every good faith effort to provide equal opportunity with respect to all of its terms and conditions of employment and in their review of activities under the contract.

b. The contractor will accept as its operating policy the following statement:

"It is the policy of this Company to assure that applicants are employed, and that employees are treated during employment, without regard to their race, religion, sex, color, national origin, age or disability. Such action shall include: employment, upgrading, demotion, or transfer; recruitment or recruitment advertising; layoff or termination; rates of pay or other forms of compensation; and selection for training, including apprenticeship, pre-apprenticeship, and/or on-the-job training."

2. EEO Officer: The contractor will designate and make known to the contracting officers an EEO Officer who will have the responsibility for and must be capable of effectively administering and promoting an active EEO program and who must be assigned adequate authority and responsibility to do so.

3. Dissemination of Policy: All members of the contractor's staff who are authorized to hire, supervise, promote, and discharge employees, or who recommend such action, or who are substantially involved in such action, will be made fully cognizant of, and will implement, the contractor's EEO policy and contractual responsibilities to provide EEO in each grade and classification of employment. To ensure that the above agreement will be met, the following actions will be taken as a minimum:

a. Periodic meetings of supervisory and personnel office employees will be conducted before the start of work and then not less often than once every six months, at which time the contractor's EEO policy and its implementation will be reviewed and explained. The meetings will be conducted by the EEO Officer.

b. All new supervisory or personnel office employees will be given a thorough indoctrination by the EEO Officer, covering all major aspects of the contractor's EEO obligations within thirty days following their reporting for duty with the contractor.

c. All personnel who are engaged in direct recruitment for the project will be instructed by the EEO Officer in the contractor's procedures for locating and hiring minorities and women.

d. Notices and posters setting forth the contractor's EEO policy will be placed in areas readily accessible to employees, applicants for employment and potential employees.

e. The contractor's EEO policy and the procedures to implement such policy will be brought to the attention of employees by means of meetings, employee handbooks, or other appropriate means.

4. Recruitment: When advertising for employees, the contractor will include in all advertisements for employees the notation: "An Equal Opportunity Employer." All such advertisements will be placed in publications having a large circulation among minorities and women in the area from which the project work force would normally be derived.

a. The contractor will, unless precluded by a valid bargaining agreement, conduct systematic and direct recruitment through public and private employee referral sources likely to yield qualified minorities and women. To meet this requirement, the contractor will identify sources of potential minority group employees, and establish with such identified sources procedures whereby minority and women applicants may be referred to the contractor for employment consideration.

b. In the event the contractor has a valid bargaining agreement providing for exclusive hiring hall referrals, the contractor is expected to observe the provisions of that agreement to the extent that the system meets the contractor's compliance with EEO contract provisions. Where implementation of such an agreement has the effect of discriminating against minorities or women, or obligates the contractor to do the same, such implementation violates Federal nondiscrimination provisions.

c. The contractor will encourage its present employees to refer minorities and women as applicants for employment. Information and procedures with regard to referring such applicants will be discussed with employees.

5. Personnel Actions: Wages, working conditions, and employee benefits shall be established and administered, and personnel actions of every type, including hiring, upgrading, promotion, transfer, demotion, layoff, and termination, shall be taken without regard to race, color, religion, sex, national origin, age or disability. The following procedures shall be followed:

a. The contractor will conduct periodic inspections of project sites to insure that working conditions and employee facilities do not indicate discriminatory treatment of project site personnel.

b. The contractor will periodically evaluate the spread of wages paid within each classification to determine any evidence of discriminatory wage practices.

c. The contractor will periodically review selected personnel actions in depth to determine whether there is evidence of discrimination. Where evidence is found, the contractor will promptly take corrective action. If the review indicates that the discrimination may extend beyond the actions reviewed, such corrective action shall include all affected persons.

d. The contractor will promptly investigate all complaints of alleged discrimination made to the contractor in connection with its obligations under this contract, will attempt to resolve such complaints, and will take appropriate corrective action within a reasonable time. If the investigation indicates that the discrimination may affect persons other than the complainant, such corrective action shall include such other persons. Upon completion of each investigation, the contractor will inform every complainant of all of their avenues of appeal.

6. Training and Promotion:

a. The contractor will assist in locating, qualifying, and increasing the skills of minorities and women who are applicants for employment or current employees. Such efforts should be aimed at developing full journey level status employees in the type of trade or job classification involved.

b. Consistent with the contractor's work force requirements and as permissible under Federal and State regulations, the contractor shall make full use of training programs, i.e., apprenticeship, and on-the-job training programs for the geographical area of contract performance. In the event a

special provision for training is provided under this contract, this subparagraph will be superseded as indicated in the special provision. The contracting agency may reserve training positions for persons who receive welfare assistance in accordance with 23 U.S.C. 140(a).

c. The contractor will advise employees and applicants for employment of available training programs and entrance requirements for each.

d. The contractor will periodically review the training and promotion potential of employees who are minorities and women and will encourage eligible employees to apply for such training and promotion.

7. Unions: If the contractor relies in whole or in part upon unions as a source of employees, the contractor will use good faith efforts to obtain the cooperation of such unions to increase opportunities for minorities and women. Actions by the contractor, either directly or through a contractor's association acting as agent, will include the procedures set forth below:

a. The contractor will use good faith efforts to develop, in cooperation with the unions, joint training programs aimed toward qualifying more minorities and women for membership in the unions and increasing the skills of minorities and women so that they may qualify for higher paying employment.

b. The contractor will use good faith efforts to incorporate an EEO clause into each union agreement to the end that such union will be contractually bound to refer applicants without regard to their race, color, religion, sex, national origin, age or disability.

c. The contractor is to obtain information as to the referral practices and policies of the labor union except that to the extent such information is within the exclusive possession of the labor union and such labor union refuses to furnish such information to the contractor, the contractor shall so certify to the contracting agency and shall set forth what efforts have been made to obtain such information.

d. In the event the union is unable to provide the contractor with a reasonable flow of referrals within the time limit set forth in the collective bargaining agreement, the contractor will, through independent recruitment efforts, fill the employment vacancies without regard to race, color, religion, sex, national origin, age or disability; making full efforts to obtain qualified and/or qualifiable minorities and women. The failure of a union to provide sufficient referrals (even though it is obligated to provide exclusive referrals under the terms of a collective bargaining agreement) does not relieve the contractor from the requirements of this paragraph. In the event the union referral practice prevents the contractor from meeting the obligations pursuant to Executive Order 11246, as amended, and these special provisions, such contractor shall immediately notify the contracting agency.

8. Reasonable Accommodation for Applicants / Employees with Disabilities: The contractor must be familiar with the requirements for and comply with the Americans with Disabilities Act and all rules and regulations established there under. Employers must provide reasonable accommodation in all employment activities unless to do so would cause an undue hardship.

9. Selection of Subcontractors, Procurement of Materials and Leasing of Equipment: The contractor shall not discriminate on the grounds of race, color, religion, sex, national origin, age or disability in the selection and retention of subcontractors, including procurement of materials and leases of equipment. The contractor shall take all necessary and reasonable steps to ensure nondiscrimination in the administration of this contract.

a. The contractor shall notify all potential subcontractors and suppliers and lessors of their EEO obligations under this contract.

b. The contractor will use good faith efforts to ensure subcontractor compliance with their EEO obligations.

10. Assurance Required by 49 CFR 26.13(b):

a. The requirements of 49 CFR Part 26 and the State DOT's U.S. DOT-approved DBE program are incorporated by reference.

b. The contractor or subcontractor shall not discriminate on the basis of race, color, national origin, or sex in the performance of this contract. The contractor shall carry out applicable requirements of 49 CFR Part 26 in the award and administration of DOT-assisted contracts. Failure by the contractor to carry out these requirements is a material breach of this contract, which may result in the termination of this contract or such other remedy as the contracting agency deems appropriate.

11. Records and Reports: The contractor shall keep such records as necessary to document compliance with the EEO requirements. Such records shall be retained for a period of three years following the date of the final payment to the contractor for all contract work and shall be available at reasonable times and places for inspection by authorized representatives of the contracting agency and the FHWA.

a. The records kept by the contractor shall document the following:

(1) The number and work hours of minority and non-minority group members and women employed in each work classification on the project;

(2) The progress and efforts being made in cooperation with unions, when applicable, to increase employment opportunities for minorities and women; and

(3) The progress and efforts being made in locating, hiring, training, qualifying, and upgrading minorities and women;

b. The contractors and subcontractors will submit an annual report to the contracting agency each July for the duration of the project, indicating the number of minority, women, and non-minority group employees currently engaged in each work classification required by the contract work. This information is to be reported on Form FHWA-1391. The staffing data should represent the project work force on board in all or any part of the last payroll period preceding the end of July. If on-the-job training is being required by special provision, the contractor will be required to collect and report training data. The employment data should reflect the work force on board during all or any part of the last payroll period preceding the end of July.

III. NONSEGREGATED FACILITIES

This provision is applicable to all Federal-aid construction contracts and to all related construction subcontracts of $10,000 or more.

The contractor must ensure that facilities provided for employees are provided in such a manner that segregation on the basis of race, color, religion, sex, or national origin cannot result. The contractor may neither require such

segregated use by written or oral policies nor tolerate such use by employee custom. The contractor's obligation extends further to ensure that its employees are not assigned to perform their services at any location, under the contractor's control, where the facilities are segregated. The term "facilities" includes waiting rooms, work areas, restaurants and other eating areas, time clocks, restrooms, washrooms, locker rooms, and other storage or dressing areas, parking lots, drinking fountains, recreation or entertainment areas, transportation, and housing provided for employees. The contractor shall provide separate or single-user restrooms and necessary dressing or sleeping areas to assure privacy between sexes.

IV. Davis-Bacon and Related Act Provisions

This section is applicable to all Federal-aid construction projects exceeding $2,000 and to all related subcontracts and lower-tier subcontracts (regardless of subcontract size). The requirements apply to all projects located within the right-of-way of a roadway that is functionally classified as Federal-aid highway. This excludes roadways functionally classified as local roads or rural minor collectors, which are exempt. Contracting agencies may elect to apply these requirements to other projects.

The following provisions are from the U.S. Department of Labor regulations in 29 CFR 5.5 “Contract provisions and related matters” with minor revisions to conform to the FHWA-1273 format and FHWA program requirements.

1. Minimum wages

a. All laborers and mechanics employed or working upon the site of the work, will be paid unconditionally and not less often than once a week, and without subsequent deduction or rebate on any account (except such payroll deductions as are permitted by regulations issued by the Secretary of Labor under the Copeland Act (29 CFR part 3)), the full amount of wages and bona fide fringe benefits (or cash equivalents thereof) due at time of payment computed at rates not less than those contained in the wage determination of the Secretary of Labor which is attached hereto and made a part hereof, regardless of any contractual relationship which may be alleged to exist between the contractor and such laborers and mechanics.

Contributions made or costs reasonably anticipated for bona fide fringe benefits under section 1(b)(2) of the Davis-Bacon Act on behalf of laborers or mechanics are considered wages paid to such laborers or mechanics, subject to the provisions of paragraph 1.d. of this section; also, regular contributions made or costs incurred for more than a weekly period (but not less often than quarterly) under plans, funds, or programs which cover the particular weekly period, are deemed to be constructively made or incurred during such weekly period. Such laborers and mechanics shall be paid the appropriate wage rate and fringe benefits on the wage determination for the classification of work actually performed, without regard to skill, except as provided in 29 CFR 5.5(a)(4). Laborers or mechanics performing work in more than one classification may be compensated at the rate specified for each classification for the time actually worked therein: Provided, That the employer's payroll records accurately set forth the time spent in each classification in which work is performed. The wage determination (including any additional classification and wage rates conformed under paragraph 1.b. of this section) and the Davis-Bacon poster (WH–1321) shall be posted at all times by the contractor and its subcontractors at the site of the work in a prominent and accessible place where it can be easily seen by the workers.

b. (1) The contracting officer shall require that any class of laborers or mechanics, including helpers, which is not listed in the wage determination and which is to be employed under the contract shall be classified in conformance with the wage determination. The contracting officer shall approve an additional classification and wage rate and fringe benefits therefore only when the following criteria have been met:

(i) The work to be performed by the classification requested is not performed by a classification in the wage determination; and

(ii) The classification is utilized in the area by the construction industry; and

(iii) The proposed wage rate, including any bona fide fringe benefits, bears a reasonable relationship to the wage rates contained in the wage determination.

(2) If the contractor and the laborers and mechanics to be employed in the classification (if known), or their representatives, and the contracting officer agree on the classification and wage rate (including the amount designated for fringe benefits where appropriate), a report of the action taken shall be sent by the contracting officer to the Administrator of the Wage and Hour Division, Employment Standards Administration, U.S. Department of Labor, Washington, DC 20210. The Administrator, or an authorized representative, will approve, modify, or disapprove every additional classification action within 30 days of receipt and so advise the contracting officer or will notify the contracting officer within the 30-day period that additional time is necessary.

(3) In the event the contractor, the laborers or mechanics to be employed in the classification or their representatives, and the contracting officer do not agree on the proposed classification and wage rate (including the amount designated for fringe benefits, where appropriate), the contracting officer shall refer the questions, including the views of all interested parties and the recommendation of the contracting officer, to the Wage and Hour Administrator for determination. The Wage and Hour Administrator, or an authorized representative, will issue a determination within 30 days of receipt and so advise the contracting officer or will notify the contracting officer within the 30-day period that additional time is necessary.

(4) The wage rate (including fringe benefits where appropriate) determined pursuant to paragraphs 1.b.(2) or 1.b.(3) of this section, shall be paid to all workers performing work in the classification under this contract from the first day on which work is performed in the classification.

c. Whenever the minimum wage rate prescribed in the contract for a class of laborers or mechanics includes a fringe benefit which is not expressed as an hourly rate, the contractor shall either pay the benefit as stated in the wage determination or shall pay another bona fide fringe benefit or an hourly cash equivalent thereof.

d. If the contractor does not make payments to a trustee or other third person, the contractor may consider as part of the wages of any laborer or mechanic the amount of any costs reasonably anticipated in providing bona fide fringe benefits under a plan or program, Provided, That the Secretary of Labor has found, upon the written request of the contractor, that the applicable standards of the Davis-Bacon Act have been met. The Secretary of Labor may require the contractor to set aside in a separate account assets for the meeting of obligations under the plan or program.

2. Withholding

The contracting agency shall upon its own action or upon written request of an authorized representative of the Department of Labor, withhold or cause to be withheld from the contractor under this contract, or any other Federal contract with the same prime contractor, or any other federally-assisted contract subject to Davis-Bacon prevailing wage requirements, which is held by the same prime contractor, so much of the accrued payments or advances as may be considered necessary to pay laborers and mechanics, including apprentices, trainees, and helpers, employed by the contractor or any subcontractor the full amount of wages required by the contract. In the event of failure to pay any laborer or mechanic, including any apprentice, trainee, or helper, employed or working on the site of the work, all or part of the wages required by the contract, the contracting agency may, after written notice to

the contractor, take such action as may be necessary to cause the suspension of any further payment, advance, or guarantee of funds until such violations have ceased.

3. Payrolls and basic records

a. Payrolls and basic records relating thereto shall be maintained by the contractor during the course of the work and preserved for a period of three years thereafter for all laborers and mechanics working at the site of the work. Such records shall contain the name, address, and social security number of each such worker, his or her correct classification, hourly rates of wages paid (including rates of contributions or costs anticipated for bona fide fringe benefits or cash equivalents thereof of the types described in section 1(b)(2)(B) of the Davis-Bacon Act), daily and weekly number of hours worked, deductions made and actual wages paid. Whenever the Secretary of Labor has found under 29 CFR 5.5(a)(1)(iv) that the wages of any laborer or mechanic include the amount of any costs reasonably anticipated in providing benefits under a plan or program described in section 1(b)(2)(B) of the Davis-Bacon Act, the contractor shall maintain records which show that the commitment to provide such benefits is enforceable, that the plan or program is financially responsible, and that the plan or program has been communicated in writing to the laborers or mechanics affected, and records which show the costs anticipated or the actual cost incurred in providing such benefits. Contractors employing apprentices or trainees under approved programs shall maintain written evidence of the registration of apprenticeship programs and certification of trainee programs, the registration of the apprentices and trainees, and the ratios and wage rates prescribed in the applicable programs.

b. (1) The contractor shall submit weekly for each week in which any contract work is performed a copy of all payrolls to the contracting agency. The payrolls submitted shall set out accurately and completely all of the information required to be maintained under 29 CFR 5.5(a)(3)(i), except that full social security numbers and home addresses shall not be included on weekly transmittals. Instead the payrolls shall only need to include an individually identifying number for each employee (e.g. , the last four digits of the employee's social security number). The required weekly payroll information may be submitted in any form desired. Optional Form WH–347 is available for this purpose from the Wage and Hour Division Web site at http://www.dol.gov/esa/whd/forms/wh347instr.htm or its successor site. The prime contractor is responsible for the submission of copies of payrolls by all subcontractors. Contractors and subcontractors shall maintain the full social security number and current address of each covered worker, and shall provide them upon request to the contracting agency for transmission to the State DOT, the FHWA or the Wage and Hour Division of the Department of Labor for purposes of an investigation or audit of compliance with prevailing wage requirements. It is not a violation of this section for a prime contractor to require a subcontractor to provide addresses and social security numbers to the prime contractor for its own records, without weekly submission to the contracting agency.

(2) Each payroll submitted shall be accompanied by a "Statement of Compliance," signed by the contractor or subcontractor or his or her agent who pays or supervises the payment of the persons employed under the contract and shall certify the following:

(i) That the payroll for the payroll period contains the information required to be provided under §5.5 (a)(3)(ii) of Regulations, 29 CFR part 5, the appropriate information is being maintained under §5.5 (a)(3)(i) of Regulations, 29 CFR part 5, and that such information is correct and complete;

(ii) That each laborer or mechanic (including each helper, apprentice, and trainee) employed on the contract during the payroll period has been paid the full weekly wages earned, without rebate, either directly or indirectly, and that no deductions have been made either directly or indirectly from the full wages earned, other than permissible deductions as set forth in Regulations, 29 CFR part 3;

(iii) That each laborer or mechanic has been paid not less than the applicable wage rates and fringe benefits or cash equivalents for the classification of work performed, as specified in the applicable wage determination incorporated into the contract.

(3) The weekly submission of a properly executed certification set forth on the reverse side of Optional Form WH–347 shall satisfy the requirement for submission of the "Statement of Compliance" required by paragraph 3.b.(2) of this section.

(4) The falsification of any of the above certifications may subject the contractor or subcontractor to civil or criminal prosecution under section 1001 of title 18 and section 231 of title 31 of the United States Code.

c. The contractor or subcontractor shall make the records required under paragraph 3.a. of this section available for inspection, copying, or transcription by authorized representatives of the contracting agency, the State DOT, the FHWA, or the Department of Labor, and shall permit such representatives to interview employees during working hours on the job. If the contractor or subcontractor fails to submit the required records or to make them available, the FHWA may, after written notice to the contractor, the contracting agency or the State DOT, take such action as may be necessary to cause the suspension of any further payment, advance, or guarantee of funds. Furthermore, failure to submit the required records upon request or to make such records available may be grounds for debarment action pursuant to 29 CFR 5.12.

4. Apprentices and trainees

a. Apprentices (programs of the USDOL).

Apprentices will be permitted to work at less than the predetermined rate for the work they performed when they are employed pursuant to and individually registered in a bona fide apprenticeship program registered with the U.S. Department of Labor, Employment and Training Administration, Office of Apprenticeship Training, Employer and Labor Services, or with a State Apprenticeship Agency recognized by the Office, or if a person is employed in his or her first 90 days of probationary employment as an apprentice in such an apprenticeship program, who is not individually registered in the program, but who has been certified by the Office of Apprenticeship Training, Employer and Labor Services or a State Apprenticeship Agency (where appropriate) to be eligible for probationary employment as an apprentice.

The allowable ratio of apprentices to journeymen on the job site in any craft classification shall not be greater than the ratio permitted to the contractor as to the entire work force under the registered program. Any worker listed on a payroll at an apprentice wage rate, who is not registered or otherwise employed as stated above, shall be paid not less than the applicable wage rate on the wage determination for the classification of work actually performed. In addition, any apprentice performing work on the job site in excess of the ratio permitted under the registered program shall be paid not less than the applicable wage rate on the wage determination for the work actually performed. Where a contractor is performing construction on a project in a locality other than that in which its program is registered, the ratios and wage rates (expressed in percentages of the journeyman's hourly rate) specified in the contractor's or subcontractor's registered program shall be observed.

Every apprentice must be paid at not less than the rate specified in the registered program for the apprentice's level of progress, expressed as a percentage of the journeymen hourly rate specified in the applicable wage determination. Apprentices shall be paid fringe benefits in accordance with the provisions of the apprenticeship program. If the apprenticeship program does not specify

fringe benefits, apprentices must be paid the full amount of fringe benefits listed on the wage determination for the applicable classification. If the Administrator determines that a different practice prevails for the applicable apprentice classification, fringes shall be paid in accordance with that determination.

In the event the Office of Apprenticeship Training, Employer and Labor Services, or a State Apprenticeship Agency recognized by the Office, withdraws approval of an apprenticeship program, the contractor will no longer be permitted to utilize apprentices at less than the applicable predetermined rate for the work performed until an acceptable program is approved.

b. Trainees (programs of the USDOL).

Except as provided in 29 CFR 5.16, trainees will not be permitted to work at less than the predetermined rate for the work performed unless they are employed pursuant to and individually registered in a program which has received prior approval, evidenced by formal certification by the U.S. Department of Labor, Employment and Training Administration.

The ratio of trainees to journeymen on the job site shall not be greater than permitted under the plan approved by the Employment and Training Administration.

Every trainee must be paid at not less than the rate specified in the approved program for the trainee's level of progress, expressed as a percentage of the journeyman hourly rate specified in the applicable wage determination. Trainees shall be paid fringe benefits in accordance with the provisions of the trainee program. If the trainee program does not mention fringe benefits, trainees shall be paid the full amount of fringe benefits listed on the wage determination unless the Administrator of the Wage and Hour Division determines that there is an apprenticeship program associated with the corresponding journeyman wage rate on the wage determination which provides for less than full fringe benefits for apprentices. Any employee listed on the payroll at a trainee rate who is not registered and participating in a training plan approved by the Employment and Training Administration shall be paid not less than the applicable wage rate on the wage determination for the classification of work actually performed. In addition, any trainee performing work on the job site in excess of the ratio permitted under the registered program shall be paid not less than the applicable wage rate on the wage determination for the work actually performed.

In the event the Employment and Training Administration withdraws approval of a training program, the contractor will no longer be permitted to utilize trainees at less than the applicable predetermined rate for the work performed until an acceptable program is approved.

c. Equal employment opportunity. The utilization of apprentices, trainees and journeymen under this part shall be in conformity with the equal employment opportunity requirements of Executive Order 11246, as amended, and 29 CFR part 30.

d. Apprentices and Trainees (programs of the U.S. DOT).

Apprentices and trainees working under apprenticeship and skill training programs which have been certified by the Secretary of Transportation as promoting EEO in connection with Federal-aid highway construction programs are not subject to the requirements of paragraph 4 of this Section IV. The straight time hourly wage rates for apprentices and trainees under such programs will be established by the particular programs. The ratio of apprentices and trainees to journeymen shall not be greater than permitted by the terms of the particular program.

5. Compliance with Copeland Act requirements. The contractor shall comply with the requirements of 29 CFR part 3, which are incorporated by reference in this contract.

6. Subcontracts. The contractor or subcontractor shall insert Form FHWA-1273 in any subcontracts and also require the subcontractors to include Form FHWA-1273 in any lower tier subcontracts. The prime contractor shall be responsible for the compliance by any subcontractor or lower tier subcontractor with all the contract clauses in 29 CFR 5.5.

7. Contract termination: debarment. A breach of the contract clauses in 29 CFR 5.5 may be grounds for termination of the contract, and for debarment as a contractor and a subcontractor as provided in 29 CFR 5.12.

8. Compliance with Davis-Bacon and Related Act requirements. All rulings and interpretations of the Davis-Bacon and Related Acts contained in 29 CFR parts 1, 3, and 5 are herein incorporated by reference in this contract.

9. Disputes concerning labor standards. Disputes arising out of the labor standards provisions of this contract shall not be subject to the general disputes clause of this contract. Such disputes shall be resolved in accordance with the procedures of the Department of Labor set forth in 29 CFR parts 5, 6, and 7. Disputes within the meaning of this clause include disputes between the contractor (or any of its subcontractors) and the contracting agency, the U.S. Department of Labor, or the employees or their representatives.

10. Certification of eligibility.

a. By entering into this contract, the contractor certifies that neither it (nor he or she) nor any person or firm who has an interest in the contractor's firm is a person or firm ineligible to be awarded Government contracts by virtue of section 3(a) of the Davis-Bacon Act or 29 CFR 5.12(a)(1).

b. No part of this contract shall be subcontracted to any person or firm ineligible for award of a Government contract by virtue of section 3(a) of the Davis-Bacon Act or 29 CFR 5.12(a)(1).

c. The penalty for making false statements is prescribed in the U.S. Criminal Code, 18 U.S.C. 1001.

V. CONTRACT WORK HOURS AND SAFETY STANDARDS ACT

The following clauses apply to any Federal-aid construction contract in an amount in excess of $100,000 and subject to the overtime provisions of the Contract Work Hours and Safety Standards Act. These clauses shall be inserted in addition to the clauses required by 29 CFR 5.5(a) or 29 CFR 4.6. As used in this paragraph, the terms laborers and mechanics include watchmen and guards.

1. Overtime requirements. No contractor or subcontractor contracting for any part of the contract work which may require or involve the employment of laborers or mechanics shall require or permit any such laborer or mechanic in any workweek in which he or she is employed on such work to work in excess of forty hours in such workweek unless such laborer or mechanic receives compensation at a rate not less than one and one-half times the basic rate of pay for all hours worked in excess of forty hours in such workweek.

2. Violation; liability for unpaid wages; liquidated damages. In the event of any violation of the clause set forth in paragraph (1.) of this section, the contractor and any subcontractor responsible therefor shall be liable for the unpaid wages. In addition, such contractor and subcontractor shall be liable to the United States (in the case of work done under contract for the District of Columbia or a territory, to such District or to such territory), for liquidated damages. Such liquidated damages shall be computed with respect to each individual laborer or mechanic, including watchmen and guards, employed in violation of the clause set forth in paragraph (1.) of this section, in the sum of $10 for each calendar day on which such individual was required or permitted to work in excess of the standard workweek of forty hours without payment of the overtime wages required by the clause set forth in paragraph (1.) of this section.

3. Withholding for unpaid wages and liquidated damages. The FHWA or the contacting agency shall upon its own action or upon written request of an authorized representative of the Department of Labor withhold or cause to be withheld, from any moneys payable on account of work

performed by the contractor or subcontractor under any such contract or any other Federal contract with the same prime contractor, or any other federally-assisted contract subject to the Contract Work Hours and Safety Standards Act, which is held by the same prime contractor, such sums as may be determined to be necessary to satisfy any liabilities of such contractor or subcontractor for unpaid wages and liquidated damages as provided in the clause set forth in paragraph (2.) of this section.

4. Subcontracts. The contractor or subcontractor shall insert in any subcontracts the clauses set forth in paragraph (1.) through (4.) of this section and also a clause requiring the subcontractors to include these clauses in any lower tier subcontracts. The prime contractor shall be responsible for compliance by any subcontractor or lower tier subcontractor with the clauses set forth in paragraphs (1.) through (4.) of this section.

VI. SUBLETTING OR ASSIGNING THE CONTRACT

This provision is applicable to all Federal-aid construction contracts on the National Highway System.

1. The contractor shall perform with its own organization contract work amounting to not less than 30 percent (or a greater percentage if specified elsewhere in the contract) of the total original contract price, excluding any specialty items designated by the contracting agency. Specialty items may be performed by subcontract and the amount of any such specialty items performed may be deducted from the total original contract price before computing the amount of work required to be performed by the contractor's own organization (23 CFR 635.116).

a. The term “perform work with its own organization” refers to workers employed or leased by the prime contractor, and equipment owned or rented by the prime contractor, with or without operators. Such term does not include employees or equipment of a subcontractor or lower tier subcontractor, agents of the prime contractor, or any other assignees. The term may include payments for the costs of hiring leased employees from an employee leasing firm meeting all relevant Federal and State regulatory requirements. Leased employees may only be included in this term if the prime contractor meets all of the following conditions:

(1) the prime contractor maintains control over the supervision of the day-to-day activities of the leased employees;

(2) the prime contractor remains responsible for the quality of the work of the leased employees;

(3) the prime contractor retains all power to accept or exclude individual employees from work on the project; and

(4) the prime contractor remains ultimately responsible for the payment of predetermined minimum wages, the submission of payrolls, statements of compliance and all other Federal regulatory requirements.

b. "Specialty Items" shall be construed to be limited to work that requires highly specialized knowledge, abilities, or equipment not ordinarily available in the type of contracting organizations qualified and expected to bid or propose on the contract as a whole and in general are to be limited to minor components of the overall contract.

2. The contract amount upon which the requirements set forth in paragraph (1) of Section VI is computed includes the cost of material and manufactured products which are to be purchased or produced by the contractor under the contract provisions.

3. The contractor shall furnish (a) a competent superintendent or supervisor who is employed by the firm, has full authority to direct performance of the work in accordance with the contract requirements, and is in charge of all construction operations (regardless of who performs the work) and (b) such other of its own organizational resources (supervision, management, and engineering services) as the contracting officer determines is necessary to assure the performance of the contract.

4. No portion of the contract shall be sublet, assigned or otherwise disposed of except with the written consent of the contracting officer, or authorized representative, and such consent when given shall not be construed to relieve the contractor of any responsibility for the fulfillment of the contract. Written consent will be given only after the contracting agency has assured that each subcontract is evidenced in writing and that it contains all pertinent provisions and requirements of the prime contract.

5. The 30% self-performance requirement of paragraph (1) is not applicable to design-build contracts; however, contracting agencies may establish their own self-performance requirements.

VII. SAFETY: ACCIDENT PREVENTION

This provision is applicable to all Federal-aid construction contracts and to all related subcontracts.

1. In the performance of this contract the contractor shall comply with all applicable Federal, State, and local laws governing safety, health, and sanitation (23 CFR 635). The contractor shall provide all safeguards, safety devices and protective equipment and take any other needed actions as it determines, or as the contracting officer may determine, to be reasonably necessary to protect the life and health of employees on the job and the safety of the public and to protect property in connection with the performance of the work covered by the contract.

2. It is a condition of this contract, and shall be made a condition of each subcontract, which the contractor enters into pursuant to this contract, that the contractor and any subcontractor shall not permit any employee, in performance of the contract, to work in surroundings or under conditions which are unsanitary, hazardous or dangerous to his/her health or safety, as determined under construction safety and health standards (29 CFR 1926) promulgated by the Secretary of Labor, in accordance with Section 107 of the Contract Work Hours and Safety Standards Act (40 U.S.C. 3704).

3. Pursuant to 29 CFR 1926.3, it is a condition of this contract that the Secretary of Labor or authorized representative thereof, shall have right of entry to any site of contract performance to inspect or investigate the matter of compliance with the construction safety and health standards and to carry out the duties of the Secretary under Section 107 of the Contract Work Hours and Safety Standards Act (40 U.S.C.3704).

VIII. FALSE STATEMENTS CONCERNING HIGHWAY PROJECTS

This provision is applicable to all Federal-aid construction contracts and to all related subcontracts.

In order to assure high quality and durable construction in conformity with approved plans and specifications and a high degree of reliability on statements and representations made by engineers, contractors, suppliers, and workers on Federal-aid highway projects, it is essential that all persons concerned with the project perform their functions as carefully, thoroughly, and honestly as possible. Willful falsification, distortion, or misrepresentation with respect to any facts

related to the project is a violation of Federal law. To prevent any misunderstanding regarding the seriousness of these and similar acts, Form FHWA-1022 shall be posted on each Federal-aid highway project (23 CFR 635) in one or more places where it is readily available to all persons concerned with the project:

18 U.S.C. 1020 reads as follows:

"Whoever, being an officer, agent, or employee of the United States, or of any State or Territory, or whoever, whether a person, association, firm, or corporation, knowingly makes any false statement, false representation, or false report as to the character, quality, quantity, or cost of the material used or to be used, or the quantity or quality of the work performed or to be performed, or the cost thereof in connection with the submission of plans, maps, specifications, contracts, or costs of construction on any highway or related project submitted for approval to the Secretary of Transportation; or

Whoever knowingly makes any false statement, false representation, false report or false claim with respect to the character, quality, quantity, or cost of any work performed or to be performed, or materials furnished or to be furnished, in connection with the construction of any highway or related project approved by the Secretary of Transportation; or

Whoever knowingly makes any false statement or false representation as to material fact in any statement, certificate, or report submitted pursuant to provisions of the Federal-aid Roads Act approved July 1, 1916, (39 Stat. 355), as amended and supplemented;

Shall be fined under this title or imprisoned not more than 5 years or both."

IX. IMPLEMENTATION OF CLEAN AIR ACT AND FEDERAL WATER POLLUTION CONTROL ACT

This provision is applicable to all Federal-aid construction contracts and to all related subcontracts.

By submission of this bid/proposal or the execution of this contract, or subcontract, as appropriate, the bidder, proposer, Federal-aid construction contractor, or subcontractor, as appropriate, will be deemed to have stipulated as follows:

1. That any person who is or will be utilized in the performance of this contract is not prohibited from receiving an award due to a violation of Section 508 of the Clean Water Act or Section 306 of the Clean Air Act.
2. That the contractor agrees to include or cause to be included the requirements of paragraph (1) of this Section X in every subcontract, and further agrees to take such action as the contracting agency may direct as a means of enforcing such requirements.

X. CERTIFICATION REGARDING DEBARMENT, SUSPENSION, INELIGIBILITY AND VOLUNTARY EXCLUSION

This provision is applicable to all Federal-aid construction contracts, design-build contracts, subcontracts, lower-tier subcontracts, purchase orders, lease agreements, consultant contracts or any other covered transaction requiring FHWA approval or that is estimated to cost $25,000 or more – as defined in 2 CFR Parts 180 and 1200.

1**. Instructions for Certification – First Tier Participants:**

a. By signing and submitting this proposal, the prospective first tier participant is providing the certification set out below.

b. The inability of a person to provide the certification set out below will not necessarily result in denial of participation in this covered transaction. The prospective first tier participant shall submit an explanation of why it cannot provide the certification set out below. The certification or explanation will be considered in connection with the department or agency's determination whether to enter into this transaction. However, failure of the prospective first tier participant to furnish a certification or an explanation shall disqualify such a person from participation in this transaction.

c. The certification in this clause is a material representation of fact upon which reliance was placed when the contracting agency determined to enter into this transaction. If it is later determined that the prospective participant knowingly rendered an erroneous certification, in addition to other remedies available to the Federal Government, the contracting agency may terminate this transaction for cause of default.

d. The prospective first tier participant shall provide immediate written notice to the contracting agency to whom this proposal is submitted if any time the prospective first tier participant learns that its certification was erroneous when submitted or has become erroneous by reason of changed circumstances.

e. The terms "covered transaction," "debarred," "suspended," "ineligible," "participant," "person," "principal," and "voluntarily excluded," as used in this clause, are defined in 2 CFR Parts 180 and 1200. “First Tier Covered Transactions” refers to any covered transaction between a grantee or subgrantee of Federal funds and a participant (such as the prime or general contract). “Lower Tier Covered Transactions” refers to any covered transaction under a First Tier Covered Transaction (such as subcontracts). “First Tier Participant” refers to the participant who has entered into a covered transaction with a grantee or subgrantee of Federal funds (such as the prime or general contractor). “Lower Tier Participant” refers any participant who has entered into a covered transaction with a First Tier Participant or other Lower Tier Participants (such as subcontractors and suppliers).

f. The prospective first tier participant agrees by submitting this proposal that, should the proposed covered transaction be entered into, it shall not knowingly enter into any lower tier covered transaction with a person who is debarred, suspended, declared ineligible, or voluntarily excluded from participation in this covered transaction, unless authorized by the department or agency entering into this transaction.

g. The prospective first tier participant further agrees by submitting this proposal that it will include the clause titled "Certification Regarding Debarment, Suspension, Ineligibility and Voluntary Exclusion-Lower Tier Covered Transactions," provided by the department or contracting agency, entering into this covered transaction, without modification, in all lower tier covered transactions and in all solicitations for lower tier covered transactions exceeding the $25,000 threshold.

h. A participant in a covered transaction may rely upon a certification of a prospective participant in a lower tier covered transaction that is not debarred, suspended, ineligible, or voluntarily excluded from the covered transaction, unless it knows that the certification is erroneous. A participant is responsible for ensuring that its principals are not suspended, debarred, or otherwise ineligible to participate in covered transactions. To verify the eligibility of its principals, as well as the eligibility of any lower tier prospective participants, each participant may, but is not required to, check the Excluded Parties List System website (https://www.epls.gov/), which is compiled by the General Services Administration.

i. Nothing contained in the foregoing shall be construed to require the establishment of a system of records in order to render in good faith the certification required by this clause. The knowledge and information of the prospective participant is not required to exceed that which is normally possessed by a prudent person in the ordinary course of business dealings.

j. Except for transactions authorized under paragraph (f) of these instructions, if a participant in a covered transaction knowingly enters into a lower tier covered transaction with a person who is suspended, debarred, ineligible, or voluntarily excluded from participation in this transaction, in addition to other remedies available to the Federal Government, the department or agency may terminate this transaction for cause or default.

* * * * *

2. Certification Regarding Debarment, Suspension, Ineligibility and Voluntary Exclusion – First Tier Participants:

a. The prospective first tier participant certifies to the best of its knowledge and belief, that it and its principals:

(1) Are not presently debarred, suspended, proposed for debarment, declared ineligible, or voluntarily excluded from participating in covered transactions by any Federal department or agency;

(2) Have not within a three-year period preceding this proposal been convicted of or had a civil judgment rendered against them for commission of fraud or a criminal offense in connection with obtaining, attempting to obtain, or performing a public (Federal, State or local) transaction or contract under a public transaction; violation of Federal or State antitrust statutes or commission of embezzlement, theft, forgery, bribery, falsification or destruction of records, making false statements, or receiving stolen property;

(3) Are not presently indicted for or otherwise criminally or civilly charged by a governmental entity (Federal, State or local) with commission of any of the offenses enumerated in paragraph (a)(2) of this certification; and

(4) Have not within a three-year period preceding this application/proposal had one or more public transactions (Federal, State or local) terminated for cause or default.

b. Where the prospective participant is unable to certify to any of the statements in this certification, such prospective participant shall attach an explanation to this proposal.

2. **Instructions for Certification - Lower Tier Participants:**

(Applicable to all subcontracts, purchase orders and other lower tier transactions requiring prior FHWA approval or estimated to cost $25,000 or more - 2 CFR Parts 180 and 1200)

a. By signing and submitting this proposal, the prospective lower tier is providing the certification set out below.

b. The certification in this clause is a material representation of fact upon which reliance was placed when this transaction was entered into. If it is later determined that the prospective lower tier participant knowingly rendered an erroneous certification, in addition to other remedies available to the Federal Government, the department, or agency with which this transaction originated may pursue available remedies, including suspension and/or debarment.

c. The prospective lower tier participant shall provide immediate written notice to the person to which this proposal is submitted if at any time the prospective lower tier participant learns that its certification was erroneous by reason of changed circumstances.

d. The terms "covered transaction," "debarred," "suspended," "ineligible," "participant," "person," "principal," and "voluntarily excluded," as used in this clause, are defined in 2 CFR Parts 180 and 1200. You may contact the person to which this proposal is submitted for assistance in obtaining a copy of those regulations. “First Tier Covered Transactions” refers to any covered transaction between a grantee or subgrantee of Federal funds and a participant (such as the prime or general contract). “Lower Tier Covered Transactions” refers to any covered transaction under a First Tier Covered Transaction (such as subcontracts). “First Tier Participant” refers to the participant who has entered into a covered transaction with a grantee or subgrantee of Federal funds (such as the prime or general contractor). “Lower Tier Participant” refers any participant who has entered into a covered transaction with a First Tier Participant or other Lower Tier Participants (such as subcontractors and suppliers).

e. The prospective lower tier participant agrees by submitting this proposal that, should the proposed covered transaction be entered into, it shall not knowingly enter into any lower tier covered transaction with a person who is debarred, suspended, declared ineligible, or voluntarily excluded from participation in this covered transaction, unless authorized by the department or agency with which this transaction originated.

f. The prospective lower tier participant further agrees by submitting this proposal that it will include this clause titled "Certification Regarding Debarment, Suspension, Ineligibility and Voluntary Exclusion-Lower Tier Covered Transaction," without modification, in all lower tier covered transactions and in all solicitations for lower tier covered transactions exceeding the $25,000 threshold.

g. A participant in a covered transaction may rely upon a certification of a prospective participant in a lower tier covered transaction that is not debarred, suspended, ineligible, or voluntarily excluded from the covered transaction, unless it knows that the certification is erroneous. A participant is responsible for ensuring that its principals are not suspended, debarred, or otherwise ineligible to participate in covered transactions. To verify the eligibility of its principals, as well as the eligibility of any lower tier prospective participants, each participant may, but is not required to, check the Excluded Parties List System website (https://www.epls.gov/), which is compiled by the General Services Administration.

h. Nothing contained in the foregoing shall be construed to require establishment of a system of records in order to render in good faith the certification required by this clause. The knowledge and information of participant is not required to exceed that which is normally possessed by a prudent person in the ordinary course of business dealings.

i. Except for transactions authorized under paragraph e of these instructions, if a participant in a covered transaction knowingly enters into a lower tier covered transaction with a person who is suspended, debarred, ineligible, or voluntarily excluded from participation in this transaction, in addition to other remedies available to the Federal Government, the department or agency with which this transaction originated may pursue available remedies, including suspension and/or debarment.

* * * * *

Certification Regarding Debarment, Suspension, Ineligibility and Voluntary Exclusion--Lower Tier Participants:

1. The prospective lower tier participant certifies, by submission of this proposal, that neither it nor its principals is presently debarred, suspended, proposed for debarment, declared ineligible, or voluntarily excluded from participating in covered transactions by any Federal department or agency.

2. Where the prospective lower tier participant is unable to certify to any of the statements in this certification, such prospective participant shall attach an explanation to this proposal.

* * * * *

XI. CERTIFICATION REGARDING USE OF CONTRACT FUNDS FOR LOBBYING

This provision is applicable to all Federal-aid construction contracts and to all related subcontracts which exceed $100,000 (49 CFR 20).

1. The prospective participant certifies, by signing and submitting this bid or proposal, to the best of his or her knowledge and belief, that:

a. No Federal appropriated funds have been paid or will be paid, by or on behalf of the undersigned, to any person for influencing or attempting to influence an officer or employee of any Federal agency, a Member of Congress, an officer or employee of Congress, or an employee of a Member of Congress in connection with the awarding of any Federal contract, the making of any Federal grant, the making of any Federal loan, the entering into of any cooperative agreement, and the extension, continuation, renewal, amendment, or modification of any Federal contract, grant, loan, or cooperative agreement.

b. If any funds other than Federal appropriated funds have been paid or will be paid to any person for influencing or attempting to influence an officer or employee of any Federal agency, a Member of Congress, an officer or employee of Congress, or an employee of a Member of Congress in connection with this Federal contract, grant, loan, or cooperative agreement, the undersigned shall complete and submit Standard Form-LLL, "Disclosure Form to Report Lobbying," in accordance with its instructions.

2. This certification is a material representation of fact upon which reliance was placed when this transaction was made or entered into. Submission of this certification is a prerequisite for making or entering into this transaction imposed by 31 U.S.C. 1352. Any person who fails to file the required certification shall be subject to a civil penalty of not less than $10,000 and not more than $100,000 for each such failure.

3. The prospective participant also agrees by submitting its bid or proposal that the participant shall require that the language of this certification be included in all lower tier subcontracts, which exceed $100,000 and that all such recipients shall certify and disclose accordingly.

COUNTY OF SAN LUIS OBISPO

DEPARTMENT OF PUBLIC WORKS AND TRANSPORTATION

BOND FORMS

FOR

TAR SPRING CREEK BRIDGE ON BRANCH MILL ROAD

CONTRACT NO. 300385

FEDERAL AID PROJECT NO. BRLO-5949(116)

PERFORMANCE BOND

KNOW ALL BY THESE PRESENTS: That

WHEREAS, the Board of Supervisors of the County of San Luis Obispo, State of California, has awarded to _____ (hereinafter designated as "Principal") a contract for _____ _____ _____; and

WHEREAS, said Principal is required under the terms of said contract to furnish a bond for the faithful performance of said contract;

NOW, THEREFORE, we, the Principal and _____ _____, as Surety, are held and firmly bound unto the County of San Luis Obispo, (hereinafter called "County"), in the sum of _____($_____), the sum not being less than one hundred percent (100%) of the total amount of the contract, for the payment of which sum well and truly to be made, we bind ourselves, our heirs, executors, administrators and successors, jointly and severally, firmly by these presents.

The condition of this obligation is such that if the above bounded Principal, his or its heirs, executors, administrators, successors or assigns, shall in all things stand to and abide by, and well and truly keep and perform the covenants, conditions and agreements in the said contract and any alteration thereof made as therein provided, on his/her or their part, to be kept and performed at the time and in the manner therein specified, and in all respects according to their true intent and meaning, and shall indemnify and save harmless County, its officers, agents, and employees, as therein stipulated, then this obligation shall become null and void; otherwise it shall be and remain in full force virtue and effect.

And the said Surety, for value received, hereby stipulates and agrees that no change, extension of time, alteration or addition to the terms of the contract or to the work to be performed thereunder or the specifications accompanying the same shall in any manner affect its obligations on this bond, and it does hereby waive notice of any such change, extension of time, alteration, or additions to the terms of the contract or to the work or to the specifications.

In the event suit is brought upon this bond by County and judgment is recovered, Surety shall pay all costs incurred by County in such suit, including a reasonable attorney's fee to be fixed by the Court.

Principal and Surety agree that this Performance Bond shall not be considered a part of the Contract. Principal and Surety further agree that this Performance Bond is a separate obligation of the Principal and its Surety, and that any attorneys' fee provision contained in this Performance Bond shall not apply to the Contract. In the event there is any litigation between the parties arising from the breach of the Contract, each party will bear its own attorneys' fees in the litigation. Death of the Principal shall not relieve Surety of its obligations hereunder.

IN WITNESS WHEREOF, one identical counterpart of this instrument, which shall for all purposes be deemed an original thereof, has been duly executed by Principal and Surety above named, on the day of_____,20_____.

_____ (Seal)

_____ (Seal)

_____ (Seal)
Principal

_____ (Seal)

_____ (Seal)

_____ (Seal)
Surety

_____

_____
Address

NOTE:

Signatures of those executing for Surety must be properly acknowledged.

PAYMENT BOND

KNOW ALL BY THESE PRESENTS:

WHEREAS, the Board of Supervisors of the County of San Luis Obispo, State of California, and

_____

(hereinafter designated as "Principal") have entered into an agreement for _____

_____

_____

_____

which said Agreement, and all of the Contract Documents attached to or forming a part of said Agreement, are hereby referred to and made a part hereof; and

WHEREAS, Principal is required to furnish a bond in connection with the contract described above; providing that if Principal or any of its Subcontractors shall fail to pay for any materials, provisions, provender, equipment, or other supplies used in, upon, for or about the performance of the work contracted to be done, or for any work or labor done thereon of any kind, or for amounts due under the Unemployment Insurance Code or for any amounts required to be deducted, withheld, and paid over to the Employment Development Department from the wages of employees of Principal and its Subcontractors with respect to such work or labor the Surety on this bond will pay for the same to the extent hereinafter set forth.

NOW THEREFORE, we, the Principal and _____ as Surety, are held and firmly bound unto the County in the penal sum of _____ _____Dollars ($_____), the sum being not less than one hundred percent (100%) of the total amount of the Contract, lawful money of the United States of America, for the payment of which sum well and truly to be made, we bind ourselves, our heirs, executors, administrators, successors and assigns, jointly and severally, firmly by these presents.

THE CONDITION OF THIS OBLIGATION IS SUCH that if Principal, his or its subcontractors, heirs, executors, administrators, successors or assigns, shall fail to pay any of the persons named in Section 9100 of the Civil Code, fail to pay for any materials, provisions or other supplies, used in, upon, for or about the performance of the work contracted to be done, or for any work or labor thereon of any kind, or amounts due under the Unemployment Insurance Code with respect to work or labor performed

under the contract, or for any amounts required to be deducted, withheld, and paid over to the Employment Development Department or Franchise Tax Board from the wages of employees of the contractor and his subcontractors pursuant to Section 18663 of the Revenue and Taxation Code, with respect to such work and labor the Surety or Sureties will pay for the same, in an amount not exceeding the sum herein above specified, and also, in case suit is brought upon this bond, all litigation expenses incurred by the County in such suit, including reasonable attorneys' fees, court costs, expert witness fees and investigation expenses.

This bond shall inure to the benefit of any of the persons named in Section 9100 of the Civil Code so as to give a right of action to such persons or their assigns in any suit brought upon this bond.

It is further stipulated and agreed that the Surety on this bond shall not be exonerated or released from the obligation of this bond by any change, extension of time for performance, addition, alteration or modification in, to, or of any contract, plans, specifications, or agreement pertaining or relating to any scheme or work of improvement herein above described, or pertaining or relating to the furnishing of labor, materials, or equipment therefore, nor by any change or modification of any terms of payment or extension of the time for any payment pertaining or relating to any scheme or work of improvement herein above described, nor by any rescission or attempted rescission or attempted rescission of the contract, agreement or bond, nor by any conditions precedent or subsequent in the bond attempting to limit the right of recovery of claimants otherwise entitled to recover under any such contract or agreement or under the bond, nor by any fraud practiced by any person other than the claimant seeking to recover on the bond and that this bond be construed most strongly against the Surety and in favor of all persons for whose benefit such bond is given, and under no circumstances shall Surety be released from liability to those for whose benefit such bond has been given, by reason of any breach of contract between the owner or County and original contractor or on the part of any obligee named in such bond, but the sole conditions of recovery shall be that claimant is a person described in Section 9100 of the Civil Code, and has not been paid the full amount of his claim and that Surety does hereby waive notice of any such change, extension of time, addition, alteration or modification herein mentioned and the provisions of Sections 2819 and 2845 of the Civil Code.

In case suit is brought upon this bond, then said Surety will pay a reasonable attorneys' fee to be fixed by the court. Principal and Surety agree that this Payment Bond shall not be considered a part of the Contract. Principal and Surety further agree that this Payment Bond is a separate obligation of the

Principal and its Surety, and that any attorneys' fee provision contained in this Payment Bond shall not apply to the Contract. In the event there is any litigation between the parties arising from the breach of the Contract, each party will bear its own attorneys' fees in the litigation. Death of the Principal shall not relieve Surety of its obligations hereunder.

IN WITNESS WHEREOF one identical counterpart of this instrument, which shall for all purposes be deemed an original thereof, has been duly executed by the Principal and Surety above named, on the _ day of_____, 20_____.

_____ (Seal)

_____ (Seal)

_____ (Seal)
Principal

_____ (Seal)

_____ (Seal)

_____ (Seal)
Surety

_____

_____
Address

NOTE:
Signatures of those executing for Surety must be properly acknowledged.

COUNTY OF SAN LUIS OBISPO

DEPARTMENT OF PUBLIC WORKS AND TRANSPORTATION

GENERAL CONDITIONS

FOR

TAR SPRING CREEK BRIDGE ON BRANCH MILL ROAD

CONTRACT NO. 300385

FEDERAL AID PROJECT NO. BRLO-5949(116)

PAGE LEFT BLANK INTENTIONALLY

1 GENERAL

1-1.01 GENERAL

1-1.01A ORGANIZATION

Division I (General Provisions) of the Caltrans Standard Specifications is superseded by these County General Conditions. While the County General Conditions may appear to be similar to the Caltrans 2010 Standard Specifications, Division I, General Provisions, in some respects, they are not the same. Bidders and the Contractor are advised to read these County General Conditions carefully, and to not assume that provisions that are similar to Caltrans provisions are actually the same as Caltrans. It is the responsibility of all Bidders to read and understand the County General Conditions before submitting a Bid.

The Bid items set forth the construction specifications that apply. The first 2 digits of a bid item code correspond to the specification section number with the same 2 first digits except for bid item code 999990 that corresponds to Section 9 and unless shown otherwise in the table titled "Bid Items and Applicable Sections" in the Special Provisions.

1-1.01B INTERPRETATION

The specifications are written to the Bidder before award and the Contractor after. Before award, interpret sentences written in the imperative mood as starting with "The Bidder must" and interpret "you" as "the Bidder" and "your" as "the Bidder's." After award, interpret sentences written in the imperative mood as starting with "The Contractor must" and interpret "you" as "the Contractor" and "your" as "the Contractor's."

1-1.01C COMMUNICATIONS

After Contract approval, submit documents and direct questions to the Engineer. Orders, authorizations, and requests to the Contractor are by the Engineer.

The following items from the County are in writing:

1. Approvals
2. Authorizations
3. Decisions
4. Notifications
5. Orders
6. Responses

The following items from the Contractor must be in writing:

1. Assignments
2. Notifications
3. Proposals
4. Reports
5. Requests, including RFIs, sequentially numbered
6. Subcontracts
7. Test results

Where a location is not specified with the words "shown," "specified," or "described" interpret:

1. "Shown" as "shown on the plans."
2. "Specified" as "specified in the specifications."
3. "Described" as "described in the Contract." "Described" means "shown, specified, or both."

Headings are included for the purposes of organization and referencing. Inclusion of a heading with no related content, "Not Used," or "Reserved" does not indicate that no specification exists for that subject; applicable specifications may be covered in a general or referenced specification.

The specifications are expressed in U.S. customary units except where a referenced document uses the International System of Units as the standard.

Unless an object or activity is specified to be less than the total, the quantity or amount is all of the object or activity.

All items in a list apply unless the items are specified as choices.

1-1.01D ORDER OF PRECEDENCE

In the event of conflicts or discrepancies among the Contract Documents, interpretations will be based on the following order of precedence:

1. Permits and other governmental approvals;
2. Change Orders and Construction Change Directives, issued after execution of the Agreement;
3. Agreement;
4. General Conditions;
5. Special Provisions;
6. Project Plans;
7. Revised Standard Specifications that are included in the Contract Documents;
8. Revised Standard Plans that are included in the Contract Documents;
9. Standard Specifications;
10. Standard Plans;
11. Bidding Documents.

In the event of conflicts or discrepancies within the Contract Documents, interpretations will be based on the following order of precedence:

1. Written numbers and notes on a drawing govern over graphics;
2. A detail drawing governs over a general drawing;
3. A detail specification governs over a general specification;
4. A specification in a section governs over a specification referenced by that section.

1-1.01E SEVERABILITY

In the event any Article, Section, Sub-article, Paragraph, Subparagraph, sentence, clause or phrase contained in the Contract Documents shall be deemed, determined, declared or adjudged invalid, illegal, unconstitutional, void or otherwise unenforceable such provision or clause shall be deemed to be severed and deleted from the Contract Documents and all remaining provisions shall continue in full force and effect.

1-1.01F PROVISIONS DEEMED INSERTED

Each and every provision of law and clause required to be inserted in the Contract Documents shall be deemed to be inserted herein and the Contract Documents shall be read and enforced as though such provision or clause is included herein, and if through mistake, or otherwise, any such provision is not inserted or not correctly inserted, then upon application of either party, the Contract Documents shall forthwith be physically amended to make such insertion or correction.

1-1.01G HEADINGS NOT CONTROLLING

The various headings contained in the Contract Documents are inserted for convenience only and shall not affect the meaning or interpretation of the Contract or any provision thereof.

1-1.01H NEUTRAL INTERPRETATION

The Contract Documents shall be construed neither against nor in favor of either Party, but shall be construed in a neutral manner.

1-1.02–1-1.04 RESERVED

1-1.05 REFERENCES

A reference within parentheses to a law or regulation is included in the Contract for convenience only and is not a comprehensive listing of related laws and regulations. Lack of a reference does not indicate no related laws or regulations exist.

Where the version of a referenced document is not specified, use the most recent version in effect on the date of the Notice to Bidders.

A reference to a section includes the general specifications for the section.

Where a section number is referenced without a reference to a document, the reference is to a section of the General Conditions (sections 1-9) or Technical Provisions (sections 10-94).

A code not specified as a federal code is a California code.

A department not specified as a federal or local department is a California department.

1-1.06 ABBREVIATIONS

Interpret the meaning of an abbreviation used in the specifications and the Bid Item List as shown in the following table:

Abbreviations

Abbreviation	Meaning
AASHTO	American Association of State Highway and Transportation Officials
AB	aggregate base
ACI	American Concrete Institute
AISC	American Institute of Steel Construction
AISI	American Iron and Steel Institute
AMA	archaeological monitoring area
ANSI	American National Standards Institute
API	American Petroleum Institute
AREMA	American Railway Engineering and Maintenance-of-Way Association
AS	aggregate subbase
ASME	American Society of Mechanical Engineers
ASQ	American Society for Quality
ATPB	asphalt treated permeable base
AWG	American Wire Gauge
AWPA	American Wood Protection Association
AWS	American Welding Society[a]
AWWA	American Water Works Association
BBS	battery backup system
BNSF	Burlington Northern Santa Fe
Cal/OSHA	California Division of Occupational Safety and Health Administration
CBC	California Building Code
CDPH	California Department of Public Health
CIDH	cast-in-drilled-hole
CIH	Certified Industrial Hygienist
CIP	cast in place
CJP	complete joint penetration
CMU	concrete masonry unit
CPM	critical path method
CPL	composite plastic lumber
CRCP	continuously reinforced concrete pavement
CRM	crumb rubber modifier
CTB	cement treated base
CTPB	cement treated permeable base
CVN	Charpy V-notch
CWI	AWS Certified Welding Inspector
DBE	Disadvantaged Business Enterprise
DRA	Dispute Resolution Advisor
DRB	Dispute Resolution Board
DTSC	Department of Toxic Substances Control
DVBE	Disabled Veteran Business Enterprise
ECTC	Erosion Control Technology Council
EIA	Electronic Industries Alliance
ESA	environmentally sensitive area
ETL	Electrical Testing Laboratories
f_c	extreme fiber compressive stress in concrete at service loads
f'_c	compressive strength of concrete
FHWA	Federal Highway Administration
GAAP	Generally Accepted Accounting Principles
GGBFS	ground granulated blast furnace slag; slag cement
GSP	galvanized steel pipe

HMA	hot mix asphalt
HMA-O	hot mix asphalt (open graded)
HS	high strength
ICC	International Code Council
ITE	Institute of Transportation Engineers
IEEE	Institute of Electrical and Electronics Engineers
JMF	job mix formula
JPCP	jointed plain concrete pavement
ksf	kips per square foot
ksi	kips per square inch
LCB	lean concrete base
LCS	Department's lane closure system
LEED	Leadership in Energy and Environmental Design
LOTB	log of test boring
LTDS	long term design strength
MC	medium curing
METS	Department's Materials Engineering and Testing Services
MPI	Master Painters Institute
MR	movement rating
MSDS[b]	material safety data sheet
MT	magnetic particle testing
MUTCD	*Manual on Uniform Traffic Control Devices*
NDT	nondestructive testing
NETA	International Electrical Testing Association
NEC	National Electrical Code
NEMA	National Electrical Manufacturers Association
NFPA	National Fire Protection Association
NPDES	National Pollutant Discharge Elimination System
NPT	National Pipe Thread Taper
NRTL	Nationally Recognized Testing Laboratory
OBC	optimum binder content
OGFC	open graded friction course
OSD	Offices of Structure Design
PLAC	permit, license, agreement, certification, or any combination of these
PC	precast
PCC	portland cement concrete
pcf	pounds per cubic foot
PG	performance grade
PI_0	zero blanking band profile index
PJP	partial joint penetration
POC	pedestrian overcrossing
PQR	procedure qualification record
PS	prestressed
PSF	pedestrian signal face
PV	programmed visibility
QA	quality assurance
QAP	Quality Assurance Program
QC	quality control
QSD	qualified SWPPP developer
QSP	qualified SWPPP practitioner
RAP	reclaimed asphalt pavement
RCSC	Research Council on Structural Connections
RECP	rolled erosion control product
RFI	request for information
RHMA	rubberized hot mix asphalt
RHMA-G	rubberized hot mix asphalt (gap graded)

RHMA-O	rubberized hot mix asphalt (open graded)
RHMA-O-HB	rubberized hot mix asphalt (open graded high binder)
RPL	recycled plastic lumber
RSC	rapid strength concrete
RSP	rock slope protection
RSS	revised standard specifications
RT	radiographic testing
RWQCB	Regional Water Quality Control Board
SMSA	Standard Metropolitan Statistical Area
SC	slow curing
SCC	self-consolidating concrete
SCM	supplementary cementitious material
SSPC	The Society for Protective Coatings
SWPPP	storm water pollution prevention plan
TEES	Transportation Electrical Equipment Specifications
TIA	time impact analysis
TV	target value
UFFA	ultra fine fly ash
UL	Underwriters Laboratories, Inc
USC	United States Code
USM	unidentified stock material
UT	ultrasonic testing
VECP	value engineering change proposal
VFD	Variable-frequency drive
VPM	volts per mil
WPC	water pollution control
WPCP	water pollution control program
WPS	welding procedure specification

[a]Interpret a reference to AWS as a reference to AWS, ANSI/AWS, or AASHTO/AWS
[b]Interpret a reference to MSDS as a reference to SDS under 29 CFR 1910.1200.

Bid Item List Abbreviations

Abbreviation	Meaning
ACRE	acre
CF	cubic foot
CY	cubic yard
EA	each
(F)	final pay item
GAL	gallon
H	hour
LB	pound
LF	linear foot
LS	lump sum
LNMI	lane mile
MFBM	thousand foot board measure
MI	mile
MSYD	thousand station yard
STA	station (100 feet)
SQFT	square foot
SQYD	square yard
TAB	tablet
TON	2,000 pounds
WDAY	working day

1-1.07 DEFINITIONS

1-1.07A General

Not Used.

1-1.07B Glossary

acts of God: "Acts of God" as defined in Public Contract Code § 7105

activity: Task, event, or other project element on a schedule that contributes to completing the project. An activity has a description, start date, finish date, duration, and one or more logic ties.

addenda: Addenda are written or graphic instruments issued by the County prior to opening of Bids, which interpret, clarify, or modify the Contract Documents.

admitted surety insurer: A surety authorized to transact surety insurance in the State of California, as evidenced by a valid Certificate of Authority issued by the California Department of Insurance in accordance with California Insurance Code Section 12070 *et seq.*

aerially deposited lead: Lead primarily from vehicle emissions deposited within unpaved areas or formerly unpaved areas.

Agreement: The executed portion of the Contract Documents, incorporating all of the Contract Documents.

affiliate: An affiliate of a Bidder, Contractor, or Subcontractor is an entity that is subject to control by the same persons who control the Bidder, Contractor, or Subcontractor, through joint ownership or otherwise.

applicable law: All state, federal, and local laws, statutes, ordinances, codes, rules, and regulations governing the Work.

Application for final payment: The Contractor's written request for Final Payment including reconciliation of all partial payments, claims, changes or other proper adjustments to the Contract.

archaeological monitoring area: Area within or near construction limits where access is allowed, but work is subject to archaeological monitoring.

archaeological resources: Remains of past human activity, including historic and prehistoric material (e.g., tools and tool fragments, hearth and food remains, structural remains, and human remains).

as-built drawings: The Contractor's daily, current, and complete on-site record set of Drawings showing all changes and details.

authorized laboratory: Independent testing laboratory (1) not employed or compensated by any subcontractor or subcontractor's affiliate providing other services for the Contract and (2) authorized by the Department.

base: Layer of specified material of planned thickness placed immediately below the pavement or surfacing.

basement material: Material in excavation or embankment under the lowest layer to be placed.

Bid: A complete and properly executed offer by the bidder on County-prescribed forms to perform the work for the prices stated in response to the Notice to Bidders.

bid item: Specific work unit for which the Bidder provides a price.

Bid Item List: List of bid items with the associated or estimated quantities in conformity with the Contract Documents.

bridge: Structure that:

1. Has a bridge number
2. Carries a utility or railroad or vehicle, pedestrian, or other traffic over, under, or around obstructions or waterways

California Test: Caltrans-developed test for determining work quality. For California Tests, go to the METS website.

Caltrans: California Department of Transportation as defined in St & Hwy Code § 20 and authorized in St & Hwy Code § 90; its authorized representatives.

certificate of compliance: Certificate stating the material complies with the Contract that is issued from or by a person or entity acceptable to the County.

Certified Industrial Hygienist: Industrial hygienist certified in comprehensive practice by the American Board of Industrial Hygiene.

Change Order: A written document, using the County's approved standard Change Order form, executed by the Contractor and the County reflecting mutual agreement between the County and Contractor for any of the following:

1. any alteration in, deviation from, addition to, or deletion from the general scope of Work of the Contract;

2. a change in the terms or conditions of the Contract; and

3. the amount of the adjustment, if any, in the Contract Price and/or Contract Time.

It constitutes a full settlement and compromise, and an accord and satisfaction. (See Section 4-1.05D)

Change Order Work: Work described in a Change Order, including extra work and work described in the Contract as Change Order Work.

commercial source: Established business operating as a material source to the general public.

Construction Change Directive: See Section 4-1.05E.

construction permits: Permits required for the proper execution and completion of the Work, which are customarily secured after execution of the Contract including, but not limited to, permits related to trenching, excavation, street work, mechanical, electrical, plumbing, and elevators.

Contract: Written and executed contract between the County and the Contractor and includes all Contract Documents.

Contract acceptance: County Board of Supervisors' written acceptance of a completed Contract.

Contract Documents: The Contract Documents are enumerated in the Agreement and consist of the Notice to Bidders, Instructions to Bidders, Bid Forms, General Conditions, Specifications, Appendices, Project Plans, and all addenda thereto, including permits and other governmental approvals required for the Work, , other documents listed in the Agreement, and Modifications issued after execution of the Contract.

Contract Price: The Contract Price is the total aggregate amount of the Contractor's bid price based on the estimated quantities listed in the Bid Item List as set forth in the award of the Contract approved by the County's Board of Supervisors, subject to adjustment for variances in quantities and changes pursuant to Change Orders executed in accordance with the Contract Documents. The Contract Price can only be altered through a Change Order

Contract time: Number of working days within which the Contractor must fully perform all work under the Contract.

Contractor: Person or business or its legal representative whose bid is accepted and who enters into a Contract with the County for performance of the work. The Contractor is the prime contractor.

controlling activity: Construction activity that will extend the scheduled completion date if delayed.

County: The County of San Luis Obispo

County Clerk: The Clerk of the Board of Supervisors of the County of San Luis Obispo, State of California

critical path: Longest continuous chain of activities for the project that has the least amount of total float of all chains. In general, a delay on the critical path extends the scheduled completion date.

critical path method: Network based planning technique using activity durations and relationships between activities to calculate a schedule for the entire project.

culvert: Structure other than a bridge that provides an opening under a roadway.

data date: Day after the date through which a schedule is current. Everything occurring earlier than the data date is as-built and everything on or after the data date is planned.

day: 24 consecutive hours running from midnight to midnight; calendar day.

1. **business day:** Day on the calendar except a Saturday or a holiday.
2. **working day:** Time measure unit for work progress. A working day is any 24-consecutive-hour period except:
   - 2.1. Saturday and holiday.
   - 2.2. Day during which work cannot be performed on the controlling activity for at least 50 percent of the scheduled work shift with at least 50 percent of the scheduled labor and equipment due to any of the following:
     - 2.2.1. Adverse weather-related conditions.
     - 2.2.2. Maintaining traffic under the Contract.
     - 2.2.3. Suspension of a controlling activity that the Contractor and the Engineer agree benefits both parties.
     - 2.2.4. Unanticipated event not caused by either party such as:
       - 2.2.4.1. Act of God.
       - 2.2.4.2. Act of a public enemy.
       - 2.2.4.3. Epidemic.
       - 2.2.4.4. Fire.
       - 2.2.4.5. Flood.
       - 2.2.4.6. Governor-declared state of emergency.
       - 2.2.4.7. Landslide.
       - 2.2.4.8. Quarantine restriction.
     - 2.2.5. Issue involving a third party, including:
       - 2.2.5.1. Industry or area-wide labor strike.
       - 2.2.5.2. Material shortage.
       - 2.2.5.3. Freight embargo.
       - 2.2.5.4. Jurisdictional requirement of a law enforcement agency.
       - 2.2.5.5. Workforce labor dispute of a utility or nonhighway facility owner resulting in a nonhighway facility rearrangement not described and not solely for the Contractor's convenience. Rearrangement of a nonhighway facility includes installation, relocation, alteration, or removal of the facility.
   - 2.3. Day during a concurrent delay.
3. **original working days:** Working days to complete the work shown on the *Agreement*.

Where working days is specified without the modifier "original" in the context of the number of working days to complete the work, interpret the number as the number of original working days as adjusted by any time adjustment.

deduction: Money permanently taken from progress payment and final payment. Deductions are cumulative and are not retentions under Public Contract Code § 7107.

delay: Event that extends the completion of an activity. See Section 8-1.07.

Department: The County of San Luis Obispo acting by and through its Department of Public Works and Transportation except any references to the Department's forms, websites, manuals, guides, test methods in the specifications or plans. These shall be defined as Caltrans forms, websites, manuals, guides, test methods.

County-owned float: Time saved on the critical path by actions of the County. It is the last activity shown on the schedule before the scheduled completion date.

detour: Temporary route for traffic around a closed road part. A passageway through a job site is not a detour.

Director: Director of the Department Public Works and Transportation for the County of San Luis Obispo, State of California, acting either directly or through properly authorized agent(s), acting within the scope of the particular duties delegated to them, including registered engineers employed by the Department of Public Works and Transportation

Disadvantaged Business Enterprise: Disadvantaged Business Enterprise as defined in 49 CFR 26.5.

dispose of: Remove from the job site.

divided highway: Highway with separated traveled ways for traffic, generally in opposite directions.

Engineer: The Resident Engineer responsible for the Contract's administration; the Resident Engineer's authorized representatives.

environmentally sensitive area: Area within or near construction limits where access is prohibited or limited to protect environmental resources.

Extraordinary Measures: Measures implemented by Contractor at County's direction to expedite the progress of design or construction of all or a portion of the Work, including, without limitation, (i) working additional shifts or overtime, (ii) supplying additional manpower, equipment, and facilities, and (iii) submitting a recovery schedule for re-sequencing performance of the Work or other similar measures.

extra work: Any work, desired or performed, but not included in the original Contract.

federal-aid contract: Contract that has a federal-aid project number on the cover of the Contract Documents

Final Completion: Final Completion is the stage of performance of the Work when:

1. All Work required by the Contract Documents has been fully completed in compliance with the Contract Documents and all applicable laws including, but not limited to, correction or completion of all punch list items;

2. Contractor has delivered to the County all closeout documentation required by the Contract Documents including but not limited to the closeout documentation required by Section 9-1.17;

3. The Work passes the Engineer's final inspection and the Engineer issues a final Certificate for Payment;

4. Final inspection and approval by the County and all applicable governmental agencies has occurred; and

5. The County Board of Supervisors accepts the Work as complete and, in its discretion, and a Notice of Completion and Acceptance is recorded.

final pay item: Bid item whose quantity shown on the Bid Item List is the quantity paid.

fixed cost: Labor, material, or equipment cost directly incurred by the Contractor as a result of performing or supplying a particular bid item that remains constant regardless of the item's quantity.

float: Difference between the earliest and latest allowable start or finish times for an activity.

force account work: Work ordered on a construction project without an existing agreement on its cost, and performed with the understanding that the contractor will bill the owner according to the cost of labor, materials, and equipment, plus a certain percentage for overhead and profit.

Force Majeure: any of the following events, which materially and adversely affect Contractor's obligations hereunder: earthquakes; acts of god, epidemic, blockade, embargoes, rebellion, war, terrorism, national emergency, riot, act of sabotage, or civil commotion; discovery of any archaeological, paleontological or cultural resources; spill of hazardous substances by a third party at or near the Project site which is required to be reported to the California Environmental Protection Agency, Department of Toxic Substances Control; discovery at, near, or on the site of any species listed as "threatened" or "endangered" under the Federal or State Endangered Species Act; or unusually severe weather conditions.

grading plane: Basement material surface on which the lowest layer of subbase, base, pavement, surfacing, or other specified layer is placed.

highway: Whole right-of-way or area reserved for use in constructing the roadway and its appurtenances and other project improvements indicated in the Contractor Documents to be constructed in the right-of-way .

holiday: Holiday shown in the following table:

Holidays

Holiday	Date observed
Every Sunday	Every Sunday
New Year's Day	January 1st
Birthday of Martin Luther King, Jr.	3rd Monday in January
Lincoln's Birthday	February 12th
Washington's Birthday	3rd Monday in February
Memorial Day	Last Monday in May
Independence Day	July 4th
Labor Day	1st Monday in September
Columbus Day	2nd Monday in October
Veterans Day	November 11th
Thanksgiving Day	4th Thursday in November
Day after Thanksgiving Day	Day after Thanksgiving Day
Christmas Day	December 25th

If January 1st, February 12th, March 31st, July 4th, November 11th, or December 25th falls on a Sunday, the Monday following is a holiday. If November 11th falls on a Saturday, the preceding Friday is a holiday.

idle equipment: Equipment:

1. On the job site at the start of a delay
2. Idled because of the delay
3. Not operated during the delay

job site: Area within the defined boundaries of a project.

***Labor Surcharge and Equipment Rental Rates*:** Caltrans publication that lists labor surcharge and equipment rental rates.

landscaping: Practice of a landscaping contractor under 16 CA Code of Regs § 832.27.

listed species: Any species listed as threatened or endangered under (1) federal Endangered Species Act of 1973, 16 USC § 1531 et seq., (2) California Endangered Species Act, Fish & Game Code §§ 2050–2115.5, or (3) both.

material: Any product or substance specified for use in the construction of a project.

material shortage: Shortage of raw or produced material that is area-wide and caused by an unusual market condition except if any of the following occurs:

1. Shortage relates to a produced, nonstandard material
2. Supplier's and the Contractor's priority for filling an order differs
3. Event outside the U.S. for a material produced outside the U.S.

material source facility audit: Self-audit and a County or Caltrans audit evaluating a facility's capability to consistently produce materials that comply with the specifications.

median: Portion of a divided highway separating the traveled ways including inside shoulders.

milestone: A deadline for completion of a portion of the Work established in the Contract Documents. Event activity that has zero duration and is typically used to represent the start or end of a certain stage of the project.

mobilization: Preparatory work that must be performed or costs incurred before starting work on the various items on the job site (Pub Cont Code § 10104).

Modification: (1) a Change Order, (2) a Construction Change Directive or (3) a written order for a minor change or clarification of the Work issued by the Engineer.

narrative report: Document submitted with each schedule that discusses topics related to project progress and scheduling.

near critical path: Chain of activities with total float exceeding that of the critical path but having no more than 10 working days of total float.

Notice to Proceed. A written document issued by the County establishing the date of commencement of the Contract Time. The Contract Time for Contractor's performance of the Work is measured in working days from the date of commencement established in the Notice to Proceed.

or equal substitution. The material product, equipment or process proposed by the Contractor for use in the Work as equivalent to that specified in the Contract Documents

paleontological resources: Fossils and the deposits they are found in. Fossils are evidence of ancient life preserved in sediments and rock. Examples of paleontological resources are remains of (1) animals, (2) animal tracks, (3) plants, and (4) other organisms. Archaeological resources are not paleontological and fossils found within an archaeological resource are generally considered archaeological resources, not paleontological resources.

pavement: Uppermost layer of material placed on the traveled way or shoulder.

permitted biological activities: Monitoring, surveying, or other practices that require a take permit and project-specific permission from the U.S. Fish and Wildlife Service or NOAA Fisheries or a take permit or memorandum of understanding with the Department of Fish and Wildlife.

plans: Standard Plans, Revised Standard Plans, and Project Plans.

1. **Standard Plans:** The version of the Standard Plans of the State of California, Department of Transportation (Caltrans) and the County's Standard Construction Drawings referenced in the Technical Provisions section of the Contract Documents
2. **Revised Standard Plans:** New or Revised Standard Plans referenced in the Technical Provisions of the Contract Documents.

3. **Project Plans:** Drawings specific to the project.

plant establishment period: Number of days shown on the Notice to Bidders for plant establishment.

protective radius: Minimum distance between construction activities and a regulated species.

quality control plan: Contractor's plan to ensure QC.

regulated species: Any species protected by one or any combination of the following:

1. Federal Endangered Species Act of 1973, 16 USC § 1531 et seq.
2. California Endangered Species Act, Fish & Game Code §§ 2050–2115.5
3. Fish & Game Code §§ 1600–1616
4. National Environmental Policy Act, 42 USC § 4321 et seq.
5. California Environmental Quality Act, Public Resources Code § 21000 et seq.
6. Other law or regulation that governs activities that affect species or their habitats

roadbed: Roadway portion extending from curb line to curb line or shoulder line to shoulder line. A divided highway has 2 roadbeds.

roadside: Area between the outside shoulder edge and the right-of-way limits.

roadway: That portion of the highway within the outside lines of curbs, sidewalks, slopes, ditches, channels, or waterways. Roadway includes structures and features necessary for safety, protection of facilities, and drainage.

routine biological activities: Biological monitoring, surveying, or other activity that does not require a take permit from the U.S. Fish and Wildlife Service or NOAA Fisheries or a take permit or memo of understanding with the Department of Fish and Wildlife.

schedule:

1. **baseline Schedule:** Initial schedule showing the original work plan starting on the date of Contract approval. This schedule shows no completed work to date and no negative float or negative lag to any activity.
2. **revised schedule:** Schedule that incorporates a proposed or past change to logic or activity durations.
3. **updated schedule:** Current schedule developed from the accepted baseline and any subsequent accepted updated or revised schedules through regular monthly review to incorporate actual past progress.

scheduled completion date: Planned work completion date shown on the current schedule.

service-approved biologist: Biologist whose activities must be approved by a state or federal agency as provided in PLACs.

shoulder: Roadway portion contiguous with the traveled way for stopped vehicle accommodation, emergency use, and lateral support of base and surface courses.

small tool: Tool or piece of equipment not listed in Labor Surcharge and Equipment Rental Rates that has a replacement value of $500 or less.

specifications: Standard Specifications, Revised Standard Specifications, and Special Provisions.

1. **Standard Specifications:** The version of the Standard Specifications of the State of California, Department of Transportation (Caltrans) referenced in the Technical Provisions section of the Contract Documents. These specifications are in a book titled Standard Specifications.
2. **revised standard specifications:** New or revised standard specifications. These specifications are included in the Appendices to the Contract Documents.

3. **Special Provisions:** Specifications specific to the project. These specifications are in a section titled Special Provisions of the Contract Documents.

State: The State of California, including its agencies, departments or divisions whose conduct or action is related to the work.

Structure Design: Offices of Structure Design of the Department of Transportation.

subbase: Layer of material between a base and the basement material.

Subcontract: Contract between the Contractor and Subcontractor to perform a portion of the Work.

Subcontractor: A Subcontractor is a person or entity who has a direct contract with the Contractor to perform a portion of the Work at the site. The term "Subcontractor" is referred to throughout the Contract Documents as if singular in number and means a Subcontractor or an authorized representative of the Subcontractor.

sub-subcontractor: A sub-subcontractor is a person or entity who has a direct or indirect contract with a Subcontractor to perform a portion of the Work at the site. The term "sub-subcontractor" is referred to throughout the Contract Documents as if singular in number and means a Sub-subcontractor or an authorized representative of the sub-subcontractor.

subgrade: Roadbed portion on which pavement, surfacing, base, subbase, or a layer of any other material is placed.

submittal:

1. **action submittal:** Written and graphic information and samples that require the County's response.
2. **informational submittal:** Written information that does not require the County's response.

substructure: Bridge parts below the bridge seats, pier tops, and haunches for rigid-framed bridges or spring lines for arched bridges; includes abutment backwalls, abutment parapets, and wingwalls.

superstructure: Bridge parts except the substructure.

surfacing: Uppermost layer of material placed on a traveled way or shoulders; pavement.

take: Legal definition regarding harm to listed species as defined in 16 USC § 1532 and Fish & Game Code § 86.

take permit: Permit granted by the U.S. Fish and Wildlife Service or by the NOAA Fisheries that allows take of federal-listed species under 16 USC § 1539 or by the Department of Fish and Wildlife that allows take of state-listed species under Fish & Game Code § 2081.

time impact analysis: Analysis using a CPM schedule developed specifically to demonstrate the effect a proposed or past change or delay has on the current scheduled completion date.

time-scaled network diagram: Graphic depiction of a CPM schedule comprised of activity bars with relationships for each activity represented by arrows. The tail of each arrow connects to the activity bar for the predecessor and points to the successor.

total float: Amount of time that an activity or chain of activities can be delayed before extending the scheduled completion date.

traffic: Pedestrians, bicyclists, ridden or herded animals, vehicles, streetcars, and other conveyances either singularly or together while using any highway for purposes of travel.

traffic lane: Portion of traveled way used for the movement of a single line of vehicles.

traveled way: Roadway portion for the movement of vehicles except shoulders.

tunnel: Tunnel as defined in 8 CA Code of Regs § 8405 et seq.

unauthorized work: Work performed that is not required or authorized by the Contract.

Unit Price: Bid Item price entered by Bidder or a “Contract Item” price established by County in the Bid as a price per unit of measurement for payment for materials, equipment or services including supervision, overhead and profit for a portion of the Work described in the Contract Documents

withhold: Money temporarily or permanently taken from progress payment.

work: The resources, activities, construction and other services specified, indicated, shown, or reasonably inferable from the Contract Documents, whether completed or partially completed, and includes all other labor, materials, equipment, and services provided or to be provided by the Contractor to fulfill the Contractor’s obligations, including, but not limited to all alterations, amendments, extensions to it made by Change Order or Construction Change Directive required for Contract acceptance by the County.

work directive: a unilateral written order issued by the County directing the Contractor to continue performance of the work or a disputed item of work pending resolution of a Claim or dispute concerning the scope of work or issued after a Contractor default. The County will use a work directive when it does not agree with the Contractor’s request for a change.

work plan: Detailed formulation of a program of action.

work zone: Area of a highway with construction, maintenance, or utility work activities.

1-1.08-1-1.10 RESERVED

1-1.11 WEBSITES, ADDRESSES, AND TELEPHONE NUMBERS

Websites, Addresses, and Telephone Numbers

Reference or agency or department unit	Website	Address	Telephone no.
Authorized Laboratory Lists Authorized Material Lists Authorized Material Source Lists	http://www.dot.ca.gov/hq/esc/approved_products_list	--	--
CA Unified Certification Program's list of certified DBEs	http://www.dot.ca.gov/hq/bep/find_certified.htm	--	--
Caltrans	http://www.dot.ca.gov	--	--
County of San Luis Obispo Public Work Department	http://www.slocounty.ca.gov/PW.htm	_	(805)781-5252
Department of Conservation, Office of Mine Reclamation	http://www.conservation.ca.gov/omr/	--	--
Department of General Services, Office of Small Business and DVBE Services	http://www.dgs.ca.gov/dgs/ProgramsServices/BusServices.aspx	OFFICE OF SMALL BUSINESS AND DVBE SERVICES DEPARTMENT OF GENERAL SERVICES 707 3RD ST WEST SACRAMENTO CA 95605-2811	(800) 559-5529 (916) 375-4940
Department of Industrial Relations	http://www.dir.ca.gov	455 GOLDEN GATE AVENUE SAN FRANCISCO CA 94102	--
Caltrans Division of Accounting, Office of External Accounts Payable	http://www.dot.ca.gov/hq/asc/oap/payments/contact.htm#conpets1	MAJOR CONSTRUCTION PAYMENT AND INFORMATION UNIT OFFICE OF EXTERNAL ACCOUNTS PAYABLE DIVISION OF ACCOUNTING DEPARTMENT OF TRANSPORTATION P.O. BOX 168043 SACRAMENTO CA 95816-8043	(916) 227-9013
Caltrans Division of Construction	http://www.dot.ca.gov/hq/construc/	--	--
Caltrans Geotechnical Services	http://www.dot.ca.gov/hq/esc/geotech	GEOTECHNICAL SERVICES DEPARTMENT OF TRANSPORTATION 5900 FOLSOM BLVD SACRAMENTO CA 95819-4612	(916) 227-7000
METS	http://www.dot.ca.gov/hq/esc/Translab/	MATERIALS ENGINEERING AND TESTING SERVICES DEPARTMENT OF TRANSPORTATION 5900 FOLSOM BLVD SACRAMENTO CA 95819-4612	(916) 227-7000
Caltrans Office Engineer	--	MSC 43 OFFICE ENGINEER DEPARTMENT OF TRANSPORTATION 1727 30TH ST SACRAMENTO CA 95816-7005	--
Offices of Structure Design, Documents Unit	--	MSC 9-4/4I DOCUMENTS UNIT OFFICES OF STRUCTURE DESIGN DEPARTMENT OF TRANSPORTATION 1801 30TH ST SACRAMENTO CA 95816-7006	(916) 227-0716
Caltrans Publication Distribution Unit	--	PUBLICATION UNIT DEPARTMENT OF TRANSPORTATION 1900 ROYAL OAKS DRIVE SACRAMENTO CA 95815-3800	--

1-1.12 MISCELLANY

Make checks and bonds payable to the County of San Luis Obispo.

1-1.13 WRITTEN NOTICE

Written notice shall be deemed to have been duly served if: (a) delivered in person to the individual or member of the firm or entity for whom it was intended; (b) sent by certified mail, return receipt requested; (c) sent by a recognized overnight mail or courier service; or (d) sent by facsimile or e-mail followed by a hard copy and with receipt confirmed by telephone, to the addresses set forth in the Agreement (or to such other address as may be specified in writing by such person or entity). Notice shall be deemed effective: (a) upon delivery, if personally delivered; (b) upon telephone confirmation, if sent by facsimile or e-mail; (c) upon one (1) business day following deposit with a recognized overnight mail or courier service; or (d) upon two (2) business days following deposit in the United States mail, postage prepaid, return receipt requested.

1-1.14 INDEPENDENT CONTRACTOR

Contractor is employed hereunder to render a service within the scope of its training and experience, and Contractor shall be an independent contractor and not an employee of the County. As such, the County shall not be called upon to assume any liability for the direct payment of any salary to any employee or Subcontractor, nor to pay any benefit to any employee or Subcontractor or vendor under the Workers' Compensation laws. None of Contractor's officers, agents, employees and Subcontractors, nor any of their agents, officers and employees, shall be deemed officers, agents, employees and Subcontractors of the Owner, and the County shall not be liable or responsible to them for anything whatsoever other than liability to Contractor set forth in this Contract.

2 RESERVED

3 CONTRACT AWARD AND EXECUTION

3-1.01 GENERAL

Section 3 includes specifications related to contract award and execution.

3-1.02 CONSIDERATION OF BIDS

3-1.02A General

For a lump sum based bid, the County compares bids based on the total price.

For a unit price based bid, the County compares bids based on the sum of the item totals.

In case of discrepancy between the unit price and the total set forth for a unit basis item, the unit price shall prevail, except as provided:

1. if the amount set forth as a unit price is ambiguous, unintelligible, or uncertain for any cause, or is omitted, or is the same amount as the entry in the “Total” column, then the amount set forth in the “Total” column for the item shall prevail and shall be divided by the estimated quantity for the item and the price thus obtained shall be the unit price.

2. (Decimal Errors) If the product of the entered unit price and the estimated quantity is exactly off by a factor of ten, one hundred, etc., or one-tenth, or one-hundredth, etc. from the entered total, the discrepancy will be resolved by using the entered unit price or item total, whichever most closely approximates percentage-wise the unit price or item total in the County's Final Estimate of cost.

3-1.02B Tied Bids

The County breaks a tied Bid with a coin toss.

3-1.03-3-1.04 RESERVED

3-1.05 CONTRACT BONDS

The successful bidder must furnish 2 bonds:

1. Payment bond meeting all the statutory requirements of the State of California on a form provided by the County in an amount that shall remain equal to at least one hundred percent (100%) of the Contract Price to secure payment of all claims, demands, stop payment notices, or charges of the State of California, of material suppliers, mechanics, or laborers employed by the Contractor or by any Subcontractor or any person, firm or entity eligible to file a stop payment notice with respect to the Work.

2. Performance bond meeting all statutory requirements of the State of California on the form provided by the County. The bond shall be furnished as a guarantee of the faithful performance of the requirements of the Contract Documents as may be amended from time to time including, but not limited to, liability for delays and damages (both direct and consequential) to the County and the County’s separate contractors and consultants, warranties, guarantees and indemnity obligations, in an amount that shall remain equal to at least one hundred percent (100%) of the Contract Price.

All bonds shall be executed by a California admitted surety insurer. Bonds issued by a California admitted surety listed in the latest versions of the U.S. Department of Treasury Circular 570 shall be deemed to be accepted unless specifically rejected by the County. Bonds from a California admitted surety not listed in Treasury Circular 570 must be accompanied by all of the documents enumerated in California Code of Civil Procedure Section 995.660(a). The attorney-in-fact who executes the required bonds on behalf of the surety shall affix thereto a certified and current copy of the power of attorney. In the event of changes which increased the Contract Price, the amount of each bond shall be deemed to increase and at all times remain equal to the Contract Price. The signatures shall be acknowledged by a Notary Public.

Every bond must display the surety’s bond number and incorporate the Contract for construction of the Work by reference. The terms of the bonds shall provide that the surety agrees that no change, extension of time, alteration or modification of the Contract Documents or the Work to be

performed thereunder shall in anyway affect its obligations and shall waive notice of any such change, extension of time, or alteration or modification of the Contract Documents.

Surety further agrees that it is obligated under the bonds to any successor, grantee, or assignee of the County.

Upon the request of any person or entity appearing to be a potential beneficiary of bonds covering payment of obligations arising under the Contract, the Contractor shall promptly furnish a copy of the bonds or shall authorize a copy to be furnished.

Should any bond become insufficient, or should any of the sureties, in the opinion of the County, become non-responsible or unacceptable, the Contractor shall within ten (10) calendar days after receiving notice from the County provide written documentation to the satisfaction of the County that Contractor has secured new or additional sureties for the bonds, otherwise the Contractor shall be in default of the Contract. No further payments shall be deemed due or will be made under the Contract until a new surety(ies) qualifies and is accepted by the County.

3-1.06 CONTRACTOR LICENSE

The Contractor must be properly licensed as a contractor from Contract award through Contract acceptance (Public Contract Code § 20103.5).

3-1.07 INSURANCE POLICIES

The successful bidder must submit:

1. Copy of its commercial general liability policy and its excess policy or binder until such time as a policy is available, including the declarations page, applicable endorsements, riders, and other modifications in effect at the time of contract execution. Standard ISO form no. CG 0001 or similar exclusions are allowed if not inconsistent with Section 7-1.06. Allowance of additional exclusions is at the discretion of the County.

2. Certificate of insurance showing all other required coverages. Certificates of insurance, as evidence of required insurance for the auto liability and any other required policy, shall set forth deductible amounts applicable to each policy and all exclusions that are added by endorsement to each policy. The evidence of insurance shall provide that no cancellation, lapse, or reduction of coverage will occur without 10 days prior written notice to the County.

3. A declaration under the penalty of perjury by a CPA certifying the accountant has applied GAAP guidelines confirming the successful bidder has sufficient funds and resources to cover any self-insured retentions if the self-insured retention is over $50,000.

If the successful bidder uses any form of self-insurance for workers compensation in lieu of an insurance policy, it shall submit a certificate of consent to self-insure under Labor Code § 3700.

3-1.08-3.17 RESERVED

3-1.18 CONTRACT EXECUTION

The successful bidder must deliver to the County:

1. Signed Agreement
2. Payment and performance bonds in accordance with Section 3-1.05
3. Insurance documentation in accordance with Section 7-1.06
4. W-9 form

The County must receive these documents before the 5th business day after the bidder receives the contract for execution.

The contract is not considered executed by the successful bidder unless all of the above documents are received by the County within the specified time frame.

In addition to potential bid bond forfeiture and other remedies available to the County, the Contractor's failure to return all of the above documents within five (5) business days after the Contractor has received the Contract for execution, shall result in the deduction of one (1)

working day from the Contract Time for every day of delay in the County's receipt of said documents, if, in the Director's sole discretion, it is determined that the issuance of the Notice to Proceed has been delayed.

By executing the Agreement, Contractor represents: (1) that it has visited the Project site, familiarized itself with the local conditions under which the Work is to be performed including, without limitation, the conditions contained in any test results and/or reports provided to the Contractor, and the conditions reflected on any site surveys provided to the Contractor; (2) that it is fully experienced, qualified and competent to perform the services set forth in the Contract Documents; (3) that it is properly equipped, organized and financed to perform the Work; (4) that it is properly permitted and licensed by the State of California and all other governmental entities to perform the Work required by the Contract and that it will retain only properly licensed Subcontractors to perform the Work of the Contract; (5) that it has familiarized itself with all conditions bearing upon transportation, disposal, handling and storage of materials; (6) that it has familiarized itself with the availability of labor, water, electric power, and roads; (7) that it has familiarized itself with uncertainties of weather, or similar physical conditions at the Project Site; (8) that it has familiarized itself with the character of equipment and facilities needed preliminary to and during performance of the Work; (9) that it has familiarized itself with the staging and material storage constraints of the Project site and surrounding buildings and will confine its staging and storage operations to approved areas; (10) that it shall maintain the immediate surrounding areas in a clean and safe manner at all times; (11) that it will coordinate its construction activities with other contractors performing work on the Project Site; and (12) that it will adhere to and be bound by any conditions imposed by the commissions of the County and any regulatory agency or governmental entity with jurisdiction over the Project.

In addition, and without limiting the foregoing warranties, Contractor represents and warrants to the County as follows:

1. Contractor has familiarized itself with the nature and extent of the Contract Documents, the Work, the Project site, the as-built conditions of the job site, locality, and all laws, rules, ordinances and regulations of all government authorities having jurisdiction, that in any manner may affect costs, progress, performance or furnishing of the Work.

2. Contractor has correlated the results of all observations, examinations, investigations, explorations, tests, reports and studies referred to in this Section 3-1.18 with the terms and conditions of the Contract Documents.

3. Contractor has given the County written notice of all conflicts, errors or discrepancies (if any) that it has discovered in the Contract Documents. Contractor acknowledges that the County has made a written resolution of all such conflicts, errors or discrepancies prior to execution of this Agreement and agrees that such written resolution is acceptable to Contractor.

4. Contractor is experienced and competent in the interpretation and use of specifications and design drawings, and in the use of materials, equipment and construction techniques as are required to successfully complete the Project. Contractor shall, at its own expense, employ any and all experts necessary to successfully complete the construction Work required by the Contract Documents.

The County assumes no responsibility for any conclusions or interpretations made by the Contractor based on the information made available by the County. Nor does the County assume responsibility for any understanding reached or representation made concerning conditions which can affect the Work by any of its representatives or agents before the execution of this Contract, unless that understanding or representation is expressly stated in the Contract Documents.

Submit the following documents to the County within ten (10) business days of receipt of the fully executed Contract:

1. Storm Water Pollution Prevention Plan or Water Pollution Prevention Plan (whichever applies) – 2 copies
2. Recycling Plan
3. CPM baseline schedule

4. Identity of Safety Officer
5. Temporary structure shop drawings
6. Temporary access road alignment and profile

3-1.19 RESERVED

4 SCOPE OF WORK

4-1.01 GENERAL

Section 4 includes specifications related to the scope of work.

4-1.02 INTENT

4-1.02A General

The intent of the Contract Documents is to include all items necessary for the proper execution and completion of the Work by the Contractor. The Contract Documents are complementary, and what is required by one shall be as binding as if required by all. All Work mentioned or indicated in the Contract Documents, and all Work reasonably inferable from them, shall be performed by the Contractor as part of the Contract unless it is specifically indicated in the Contract Documents that such Work is to be done by others.

Nothing in the specifications voids the Contractor's public safety responsibilities.

In the event of conflict between any of the Contract Documents, the provision placing a more stringent requirement on the Contractor shall prevail. The Contractor shall provide the better quality or greater quantity of Work and/or materials unless otherwise directed by the County in writing. In the event none of the Contract Documents place a more stringent requirement or greater burden on the Contractor, the controlling provision shall be that which is found in the document with higher precedence (see Section 1-1.01D). Unless a more stringent requirement is provided in the Contract Documents, the Contractor shall provide for work completion using the best general practices. Nothing herein shall relieve the Contractor of its obligation to notify the County of any inconsistencies in the documents.

4-1.02B Field Measurements

Since the Contract Documents are complementary, the Contractor shall, before starting each portion of the Work, carefully study and compare the plans and other Contract Documents relative to that portion of the Work, as well as the information furnished by the County (surveys, construction staking, and supplemental project information), if any, and shall observe any conditions at the site affecting it. These obligations are for the purpose of facilitating coordination and construction by the Contractor and are not for the purpose of discovering errors, omissions, or inconsistencies in the Contract Documents; however, the Contractor shall promptly report to the Engineer any errors, inconsistencies or omissions discovered by or made known to the Contractor as a Request for Information ("RFI") submitted to the Engineer, in such form as the Engineer may require. The accuracy of grades, elevations, dimensions, or locations of existing conditions are not guaranteed by the County, and the Contractor is responsible for verifying same, except to the extent that the County performs the construction staking for the Project.

4-1.03 WORK DESCRIPTION

Construct the work described in the Contract Documents.

4-1.04 USE OF MATERIALS FOUND ON THE JOB SITE

The Contractor may use aggregate or other materials found in excavation that comply with the specifications with approval by the Engineer. The Contractor is not entitled to any additional compensation for using such materials found on the job site since the County pays for the material excavated at the excavation item Unit Price. Replace the quantity of material removed and used with an equal quantity of material. The material must have been designated for use in the work. Except for material used as structure backfill, the County does not pay for replacing the material. The County pays for excavated material replacement used for structure backfill at the Unit Price for structure backfill. Do not excavate material from outside the excavation's slope and grade lines without authorization.

4-1.05 CHANGES AND EXTRA WORK

4-1.05A General

Changes in the Work may be accomplished after execution of the Contract, and without invalidating the Contract, by Change Order or Construction Change Directive, subject to the

limitations stated in this Section 4-1.05 and elsewhere in the Contract Documents. The County may, at any time, without notice to Contractor's surety(ies), order changes in the Work within the general scope of the Contract.

Changes in the Work shall be performed under applicable provisions of the Contract Documents, and the Contractor shall proceed promptly, unless otherwise provided in the Change Order or Construction Change Directive.

4-1.05B Work-Character Changes

The County adjusts the unit price for an item if:

1. An ordered plan or specification change materially changes the character of a work item from that on which the bid price was based
2. The unit cost of the changed item differs when compared to the unit cost of that item under the original plans and specifications
3. No approved Change Order addresses the payment

The County adjusts the payment under Section 9-1.15.

4-1.05C Change Orders

A Change Order is a written document, using the County's approved standard Change Order form, executed by the Contractor and the County reflecting mutual agreement between the County and Contractor for any of the following:

1. any alteration in, deviation from, addition to, or deletion from the general scope of Work of the Contract;
2. a change in the terms or conditions of the Contract; and
3. the amount of the adjustment, if any, in the Contract Price and/or Contract Time.

4-1.05D Accord and Satisfaction

Contractor's agreement on any Change Order shall be a full compromise and settlement of all adjustments to the Contract Time and Contract Price, and all compensation for any and all delay, extended or additional field and home office overhead, disruption, acceleration, inefficiencies, lost labor or equipment productivity, differing site conditions, construction interferences and other extraordinary or consequential damages (hereinafter called "Impacts"), including any ripple or cumulative effect of said Impacts on the overall Work under the Contract arising directly or indirectly from the performance of Work described in the Change Order. By execution of any Change Order, Contractor agrees that the Change Order constitutes a complete accord and satisfaction with respect to all claims for schedule extension, Impacts, or any costs of whatsoever nature, character or kind arising out of or incidental to the Change Order. No action, conduct, omission, product failure or course of dealing by the County shall act to waive, modify, change, or alter the requirement that Change Orders must be in writing, signed by the County and Contractor and that such written Change Orders are the exclusive method for effectuating any change to the Contract Price and/or Contract Time.

4-1.05E Construction Change Directives

A unilateral written order prepared and signed by the Engineer directing the Contractor to perform a change in the Work. The Engineer may by Construction Change Directive, without invalidating the Contract, order changes in the Work, including additions, deletions, revisions, extra work. A Construction Change Directive may or may not warrant a change in Contract Time or Contract Price.

Upon receipt of a Construction Change Directive, the Contractor shall promptly proceed with the change in the Work involved and advise the Engineer of the Contractor's agreement or disagreement with the method, if any, provided in the Construction Change Directive for determining the proposed adjustment in the Contract Price or Contract Time.

4-1.05F Adjustment of Contract Price

If the Construction Change Directive or Bilateral Change Order provides for an adjustment to the Contract Price, the adjustment shall be based on one or a combination of the following methods:

1. Bid item prices
2. Agreed price
3. Force account
4. Specialist billing

If the Engineer chooses to pay for Change Order Work based on an agreed price, but the Contractor and the Engineer cannot agree on the price, the County pays by force account.

If a portion of extra work is covered by bid items, the County pays for this work as changed quantities in those items. The County pays for the remaining portion of the extra work by force account or agreed price.

4-1.05G Authority to Approve Changes

The Engineer has sole authority to approve changes that affect the Contract Price, Contract Time, or design of the Project, subject to limitations set forth in Public Contract Code Section 20142. Except as specified in this section, the Engineer shall have exclusive authority over the monetary and budgetary matters concerning the Project.

4-1.05H No Verbal Changes

All changes to the Contract, whether resulting in an increase, decrease, or no change in the Contract Price or Contract Time, must be in a written document that is authorized by the Contract Documents and signed by an authorized representative of the County.

4-1.05I Unauthorized Changes

Contractor shall undertake, at its risk, work included in any oral request, written order, Change Order, or Construction Change Directive issued by a person in excess of that person's authority as provided herein. Additionally, any work performed by the Contractor beyond the lines and grades shown on the Contract Documents or any extra work performed or provided by the Contractor without notice to the County shall be considered unauthorized and at the sole expense of the Contractor. Unauthorized work will not be measured or paid for and no extension of Contract Time will be granted on account thereof. Any unauthorized work may be ordered removed at the Contractor's sole cost and expense. The failure of the County to direct or order removal of unauthorized work shall not constitute acceptance or approval of such work nor relieve the Contractor from any liability on account thereof.

4-1.05J County-Initiated Change Proposal Request

The County may issue a Change Proposal Request, in writing, to the Contractor, describing a proposed change to the Work and requesting the Contractor submit an itemized proposal in a format acceptable to the County within ten (10) calendar days after the County's issuance of the Change Proposal Request. The Contractor's proposal shall include an analysis of impacts to cost and time, if any, to perform the extra work, or to delete Work, as applicable, including the effects and impacts, if any, on unchanged Work, estimates of costs, and Contractor's proposed methods to minimize costs, delay and disruption to the performance of the Work. If Contractor fails to submit a written proposal within such period of time, the change described in the County's Change Proposal Request shall be deemed to not result in an increase to the Contract Price or Contract Time and the change shall be performed by Contractor without any such increases. A Change Proposal Request does not authorize the Contractor to commence performance of the changed work. Contractor shall not perform any change until receipt of the County's written approval through either a Change Order or Construction Change Directive.

4-1.05K Contractor Maintenance of Daily Records for Changes.

In the event that Contractor is directed to perform any changes to the Work, or should Contractor encounter conditions which the Contractor believes would obligate the County to adjust the Contract Price and/or the Contract Time, Contractor shall maintain detailed records of the cost of

such changes on a daily basis summarized in a daily report supplemented by back-up records. Such records shall include without limitation hourly records for labor and construction equipment, itemized records of materials, including delivery tickets, and equipment used each day in connection with the performance of any change to the Work. In the event that more than one change to the Work is performed by the Contractor in a calendar day, Contractor shall maintain separate records of labor, construction equipment, materials, and equipment for each such change. In the event that one or more changes to the Work is performed by the Contractor in a calendar day in addition to base Contract Work, Contractor shall maintain separate records of labor, equipment, and materials for each change and the base Contract Work, In the event that any Subcontractor of any tier, shall provide or perform any portion of any change to the Work, Contractor shall require that each such Subcontractor maintain records in accordance with this paragraph. Each daily record maintained hereunder shall be signed by Contractor; such signature shall be deemed Contractor's representation and warranty that all information contained therein is true, accurate, complete, and relates only to the change referenced therein. All records maintained by Subcontractors of any tier, relating to the costs of a change in the Work shall be signed by such Subcontractor's authorized project manager or superintendent. All such records shall be forwarded to the County on the day the Work is performed (same day) for independent verification. The County shall attempt to review and reconcile costs for changes on a daily basis. The County's signature on the report shall indicate agreement with the information reflected therein, not that the Contractor is entitled to payment of the costs in the report. In the event that Contractor shall fail or refuse, for any reason, to maintain or make available for inspection, review, and/or reproduction such records, adjustments to the Contract Price or Contract Time, if any, on account of any change to the Work may be deemed waived for that day. Contractor's obligation to maintain back-up records hereunder is in addition to, and not in lieu of, any other Contractor obligation under the Contract Documents with respect to changes to the Work, including but not limited to the Claims procedures.

Labor. The daily report shall show the names, trade, labor, classifications, and hours worked, for the workers.

Material. The daily report shall describe and list quantities of materials used, attaching delivery tickets.

Equipment. The daily report shall show type of equipment, size, identification number, and hours of operation, including loading and transportation, if applicable.

Other Services and Expenditures. Other services and expenditures shall be described in such detail in the daily report as the County may require.

Cost. The report shall provide dollar values for each category of cost.

4-1.05L Credit for Deleted Work.

Contractor agrees that the County has the right, in its sole discretion, to determine whether any or all of the Work described in the Contract Documents shall be deleted or whether to terminate Contractor's performance, in whole or in part, under the Contract Documents and without any penalty being incurred by the County.

When an entire Bid Item or portion of Bid Item is deleted from the Contract, the value for such deleted Work established in the Bid Item List shall be used to calculate the credit amount, less the value of any Work of such item performed.

4-1.05M Final Determination of Adjustment of Contract Sum and Contract Time.

After issuance of a Construction Change Directive, when the County and Contractor reach agreement on adjustment of the Contract Price and Contract Time, such agreement shall be effective immediately and shall be recorded by preparation and execution of an appropriate Change Order.

4-1.06 DIFFERING SITE CONDITIONS

4-1.06A General

Reserved

4-1.06B Contractor's Notification

During the progress of the work, if the Contractor encounters subsurface or latent physical conditions at the job site differing materially from those indicated in the Contract or if unknown physical conditions of an unusual nature, differing materially from those ordinarily encountered and generally recognized as inherent in the work provided for in the Contract, are encountered at the job site, promptly notify the Engineer in writing of the specific differing conditions before the site is disturbed and before the affected work is performed.

Include details explaining the information the Contractor relied on and the material differences discovered.

If the Contractor disturbs the site after discovery and before the Engineer's investigation, the Contractor waives the differing site condition claim.

No Contract adjustment which results in a benefit to the Contractor will be allowed unless the Contractor has provided the required written notice.

No Contract adjustment will be allowed under this section for any effects caused on unchanged work.

The County adjusts the payment under Section 9-1.15, “Work-Character Changes.”

Upon receipt of the Contractor’s written notification, the Engineer will investigate the conditions, and if it is determined that the conditions materially differ and cause an increase or decrease in the cost or time required for the performance of any work under the Contract, a Change Order will be issued adjusting the compensation for such portion of Work in accordance with the requirements of the Contract Documents. If the County determines that the conditions do not justify an adjustment in compensation or the Contract Time, the Contractor will be notified in writing. Should the Contractor disagree with the decision, it may submit a written notice of potential claim to the County before commencing the disputed Work. In the event of such a dispute, the Contractor shall not be excused from any scheduled completion date provided by the Contract Documents and shall proceed with all Work to be performed under the Contract Documents.

4-1.06C Excavation or Trenches Deeper than 4 Feet

This section applies if the work involves digging trenches or other excavations that extend deeper than 4 feet below the surface.

Promptly, and before the following conditions are disturbed, notify the Engineer, in writing, of any:

(1) Material that the Contractor believes may be material that is hazardous waste, as defined in Section 25117 of the Health and Safety Code that is required to be removed to a Class I, Class II, or Class III disposal site in accordance with provisions of existing law.

(2) Subsurface or latent physical conditions at the site differing from those indicated by information about the site made available to bidders prior to the deadline for submitting bids.

(3) Unknown physical conditions at the site of any unusual nature, different materially from those ordinarily encountered and generally recognized as inherent in work of the character provided for in the Contract.

The Engineer promptly investigates the conditions, and if it is found that the conditions do materially so differ, or do involve hazardous waste, and cause a decrease or increase in the cost of, or the time required for, performance of any part of the work will issue a Change Order under the procedures described in the Contract.

In the event that a dispute arises between the Contractor and the Engineer as to whether the conditions materially differ, or involve hazardous waste, or cause a decrease or increase in the cost of, or time required for, performance of any part of the work, the Contractor will not be excused from any scheduled completion date provided for by the Contract, but should proceed with all work to be performed under the Contract. The Contractor will retain any and all rights provided by the Contract or by law which pertain to the resolution of claims under the Contract Documents. (Public Contract Code § 7104)

4-1.06D Underground Utilities and other Subsurface Installations

Underground utilities and subsurface installation are addressed in the Government Code section 4215 and 4216 et seq. Compliance with Government Code section 4216 et seq. is the responsibility of the Contractor and the utility operator of the subsurface installation. The County is not responsible for any costs or damages incurred by the Contractor resulting from any noncompliance with Government Code sections 4216 et seq.

The County shall only be responsible for utility conflicts to the extent required by Government Code section 4215, and only when the conflict involves an existing main trunkline or utility facility.

4-1.07 VALUE ENGINEERING

4-1.07A General

Reserved

4-1.07B Value Engineering Change Proposal

The Contractor may submit a VECP to reduce any of the following:

1. Total cost of construction
2. Construction activity duration
3. Traffic congestion

Before preparing a VECP, meet with the Engineer to discuss:

1. Proposal concept
2. Permit issues
3. Impact on other projects
4. Project impacts, including traffic, schedule, and later stages
5. Peer reviews
6. Overall proposal merits
7. Review times required by the County and other agencies

The VECP must not impair the project's essential functions or characteristics, including:

1. Service life
2. Operation economy
3. Maintenance ease
4. Desired appearance
5. Design and safety

The VECP must include:

1. Description of the Contract specifications and drawing details for performing the work and the proposed changes.
2. Itemization of Contract specifications and plan details that would be changed.
3. Detailed cost estimate for performing the work under the existing Contract and under the proposed change. Determine the estimates under Section 9-1.04.
4. Reasonable deadline for the Engineer to decide on the changes.
5. Bid items affected and resulting quantity changes.

The County is not required to consider a VECP. If a VECP is similar to a change in the plans or specifications being considered by the County at the time the proposal is submitted or if the

proposal is based on or similar to plans or specifications adopted by the County before Contract award, the County does not accept the VECP and may make these changes without VECP payments.

If the County does not approve a Change Order before the deadline stated in the VECP or other date the Contractor subsequently stated in writing, the VECP is rejected. The County does not adjust time or payment for a rejected VECP. Unless agreed in writing, the Contractor bears all of its costs relating to the VECP.

The Engineer decides whether to accept a VECP and the estimated net construction-cost savings from adopting the VECP or parts of it.

The County may require the Contractor to accept a share of the County's investigation cost as a condition of reviewing a VECP.

If the Engineer accepts the VECP or parts of it, the County issues a Change Order that:

1. Incorporates changes in the Contract necessary to implement the VECP or the parts adopted
2. Includes the County's acceptance conditions
3. States the estimated net construction-cost savings resulting from the VECP
4. Obligates the County to pay the Contractor 50 percent of the estimated net savings

In determining the estimated net construction-cost savings, the County excludes the Contractor's VECP preparation cost and the County's VECP investigation cost, including parts paid by the Contractor.

If a VECP providing for a reduction in working days is accepted by the Engineer, 50 percent of the reduction is deducted from Contract time.

If a VECP providing for a reduction in traffic congestion or avoiding traffic congestion is accepted by the Engineer, the County pays 60 percent of the estimated net savings in construction costs attributable to the VECP. Submit detailed traffic handling comparisons between the existing Contract and the proposed change, including estimates of the traffic volumes and congestion.

The County may apply an accepted VECP for general use on other contracts.

If an accepted VECP is adopted for general use, the County pays only the contractor who first submitted the VECP and only to the contracts awarded to that contractor before the submission of the accepted VECP.

If the County does not adopt a general-use VECP, an identical or similar submitted proposal is eligible for acceptance.

By making a proposal for VECP, Contractor shall be deemed to certify that: (i) the proposed VECP is equal to or exceeds all requirements of the pertinent Contract Documents as reasonably determined by Contractor; (ii) Contractor accepts the warranty and correction obligations in connection with the proposed VECP as if originally specified; (iii) the cost data presented is complete and includes all related costs under Contract, including an estimate of the redesign costs; (iv) Contractor will coordinate the installation of any accepted VECP, making such changes as may be required for the Work to be complete in all respects; (v) Contractor waives all Claims for additional costs related to the VECP which subsequently become apparent; and (vi) Contractor accepts all responsibility for direct or indirect costs and/or time impacts as result of the VECP including impacts to Work not identified in the proposal.

Contractor shall proceed with performance of the Work as required by the Contract Documents and shall not modify such requirements in accordance with any VECP unless the County accepts such request in a written Change Order.

4-1.07C Value Analysis Workshop

Not Used.

4-1.08–4-1.12 RESERVED

4-1.13 CLEANUP

Before final inspection, leave the job site neat and presentable and dispose of:

1. Rubbish
2. Excess materials
3. Falsework
4. Temporary structures
5. Equipment

Do not remove warning, regulatory, or guide signs until Contract acceptance.

5 CONTROL OF WORK

5-1.01 GENERAL

Section 5 includes specifications regarding the Contract parties' relations and Contract acceptance.

Furnish the resources except County-furnished materials required to complete the work as described in the Contract.

Provide QC.

Work is subject to the County's QAP. The County's QA does not relieve the Contractor of its responsibility to provide QC.

Ensure the County's safe and unrestricted access to the work. Furnish facilities necessary for the County's inspection.

Where the means and methods to complete the work are not described in the Contract, choose the means and methods to complete the work.

The Contractor shall be responsible for all aspects of the Work, including the supervision and direction of the Work, and shall use its best skill and attention at all times. The Contractor shall be solely responsible for, and have control over, construction means, methods, techniques, sequences and procedures and for coordinating all portions of the Work under the Contract, unless the Contract Documents give other specific instruction concerning these matters. If the Contract Documents give specific instructions concerning construction means, methods, techniques, sequences, or procedures, the Contractor shall evaluate the jobsite safety thereof and, shall be fully and solely responsible for the job site safety of such means, methods, techniques, sequences, or procedures. If the Contractor has reason to believe that such means, methods, techniques, sequences, or procedures may not be safe, reasonable, or effective, the Contractor shall give timely written notice to the County and shall not proceed with that portion of the Work without further written instructions from the Engineer. Where the Contract describes more than 1 construction method or more than 1 type of material or equipment, the County does not assure that each construction method or type of material or equipment can be used successfully throughout all or any part of the project. The Contractor is responsible to use the alternative or alternatives that will accomplish the work under the conditions encountered.

Failure to comply with any Contract part is a waiver of the Contractor's right to an adjustment of time and payment related to that part.

Use contract administration forms at the Caltrans website unless otherwise specified or requested by the Engineer.

5-1.02 RESERVED

5-1.03 ENGINEER'S AUTHORITY

The Engineer makes the final decision on questions regarding the Contract, including:

1. Work quality and acceptability
2. Manner of performance of the work
3. Contract interpretation, including drawing and specification interpretation
4. Contract fulfillment
5. Time and progress rate
6. Measurement and payment

The Engineer has the authority to enforce or fulfill an order that the Contractor fails to fulfill promptly.

Failure to enforce a Contract part does not waive enforcement of any Contract provision.

The Engineer may reject work that does not comply with the Contract at any time, including after a payment has been made.

5-1.04 COUNTY'S RIGHT TO STOP THE WORK AND CARRY OUT THE WORK

5-1.04A County's Right to Stop the Work

If the Contractor fails to correct Work that is not in accordance with the requirements of the Contract Documents as required by Section 6-3.07 or repeatedly fails to carry out Work in accordance with the Contract Documents, the County may issue a written order to the Contractor to stop the Work, or any portion thereof, until the cause for such order has been eliminated; however, the right of the County to stop the Work shall not give rise to a duty on the part of the County to exercise this right for the benefit of the Contractor or any other person or entity. The County's right to stop the Work is in addition to and without prejudice to any other rights or remedies of the County.

5-1.04B County's Right to Carry Out the Work

Notwithstanding other remedies available to the County, if the Contractor defaults or neglects to carry out the Work in accordance with the Contract Documents and fails within a forty-eight (48) hour period after receipt of written notice from the County to commence and continue correction of such default or neglect with diligence and promptness, the County, at its sole option and without obligation, may, with its own or outside forces, correct such deficiencies. In such case, an appropriate Change Order or Construction Change Directive shall be issued deducting from payments then or thereafter due the Contractor the reasonable cost of correcting such deficiencies, including compensation for the County and its consultants' additional services and expenses made necessary by such default, neglect, or failure. If payments then or thereafter due the Contractor are not sufficient to cover such amounts, the Contractor shall pay the difference to the County, immediately. This remedy is cumulative. The County may terminate the Contractor's performance pursuant to the terms of the Contract. The County also has the right, but not the obligation, to self-perform or have other companies perform portions of the Work previously assigned to Contractor. In such case an appropriate Change Order or Construction Change Directive shall be issued deducting from payments then or thereafter due the Contractor the cost of performing such work efforts.

5-1.05 EMERGENCIES

In an emergency affecting safety of persons or property, the Contractor shall act, at the Contractor's discretion, to prevent threatened damage, injury or loss. Additional compensation or extension of time claimed by the Contractor on account of an emergency shall be determined as provided in Section 5-1.43.

5-1.06 PROTESTS

The Contractor may protest an Engineer's decision by submitting an RFI.

5-1.07–5-1.09 RESERVED

5-1.10–5-1.11 RESERVED

5-1.12 SUCCESSORS AND ASSIGNS

The County and Contractor respectively bind themselves, their partners, successors, assigns and legal representatives to covenants, agreements and obligations contained in the Contract Documents.

The Contractor shall not sublet or assign the Contract or any portion thereof or any monies due thereunder, without the express prior written consent and approval of the County, which approval may be withheld in the sole discretion of the County. The County's approval to such assignment shall be upon such terms and conditions as determined by the County in its sole and exclusive discretion.

The County may assign the Contract with Contractor's prior written consent, which shall not be unreasonably withheld. In the event the Contractor is so assigned by the County, Contactor agrees, upon the assignee's request, to continue and complete performance of the Work upon payment of any undisputed outstanding amounts due Contractor under the terms of the Contract. Any entity which shall succeed to the rights of the County shall be entitled to enforce the rights of the County hereunder. If requested by such entity, Contractor will execute a separate letter or

other agreement with such entity further evidencing Contractor's commitment to continue performance of the Contract.

5-1.13 SUBCONTRACTING

5-1.13A General

No subcontract releases the Contractor from the Contract or relieves the Contractor of its responsibility for a Subcontractor's work. The Contractor shall be responsible to the County for acts and omissions of the Contractor's employees, Subcontractors and their agents and employees, and other persons performing portions of the Work for, or on behalf of, the Contractor or any of its Subcontractors and for any damages, losses, costs and expenses resulting from such acts or omissions.

Before subcontracted work starts, submit a Subcontracting Request form available on the following Caltrans website:

http://www.dot.ca.gov/hq/construc/forms.htm

Do not use a debarred contractor. For a list of debarred contractors, go to the Department of Industrial Relations' website (California) at www.dir.ca.gov/dlse/debar.html and the System for Award Management (federal) at www.sam.gov.

If Public Contract Code § 4100 et seq. is violated, the County may exercise the remedies provided under Public Contract Code § 4110. The County may refer the violation to the Contractors State License Board as provided under Public Contract Code § 4111.

The Contractor must perform work equaling at least 30 percent of the value of the original total Bid with its employees and with equipment it owns or rent, with or without operators.

Each subcontract must comply with the Contract.

Each subcontractor must have an active and valid State contractor's license with a classification appropriate for the work to be performed (Business and Professions Code § 7000 et seq.).

Submit copies of subcontracts upon request.

Upon County's request, Contractor shall immediately remove and not again use a subcontractor who fails to prosecute the work satisfactorily. The Contractor shall not contract with any subcontractor or supplier that is uninsured or not properly licensed. The Contractor shall not contract with, or allow its Subcontractors or suppliers to contract with, a proposed person or entity to whom the County has made reasonable and timely objection. The Contractor shall not be required to contract with anyone to whom the Contractor has made reasonable objection.

The County's consent to or approval of any Subcontractor under this Contract shall not in any way relieve the Contractor of his obligations under this Contract and no such consent or approval shall be deemed to waive any provision of this Contract.

Contractor shall submit copies of complete subcontracts to County upon request of County.

5-1.13A(1) Subcontractual Relations

By appropriate written agreement, the Contractor shall require each Subcontractor, to the extent of the Work to be performed by the Subcontractor, to be bound to the Contractor by terms of the Contract Documents, and to assume toward the Contractor all the obligations and responsibilities, including responsibility for safety of the Subcontractor's Work, which the Contractor, by these Contract Documents, assumes toward the County. Each subcontract agreement shall preserve and protect the rights of the County under the Contract Documents with respect to the Work to be performed by the Subcontractor so that subcontracting thereof will not prejudice such rights, and shall allow to the Subcontractor, unless specifically provided otherwise in the subcontract agreement, the benefit of all rights, remedies and redress against the Contractor that the Contractor, by the Contract Documents, has against the County. Where appropriate, the Contractor shall require each Subcontractor to enter into similar agreements with their subcontractors. The Contractor shall make available to each proposed Subcontractor, prior to the

execution of the subcontract agreement, copies of the Contract Documents to which the Subcontractor will be bound by this Section 5-1.13, and identify to the Subcontractor terms and conditions of the proposed subcontract agreement that may be at variance with the Contract Documents, and shall require that the Subcontractor modify the subcontractor agreement so that it is consistent with the Contract Documents. Subcontractors will similarly make copies of applicable portions of such documents available to their respective proposed subcontractors.

5-1.13A(2) Subcontract Provisions

Each subcontract or supply agreement shall contain provisions that:

1. Require that the Work being performed pursuant to such subcontract or supply agreement, as the case may be, be performed in accordance with the requirements and intent of the Contract Documents ;
2. Require Subcontractor (of any tier) and supplier to furnish to Contractor or the applicable Subcontractor, as the case may be, in a timely fashion all information necessary for the preparation and submission of the reports, operations and maintenance manuals, warranties, as-built information, and closeout documents required herein;
3. Require that each Subcontractor and supplier continue to perform under its subcontract or supply agreement if the Contract is terminated and if the County takes an assignment of the subcontract or supply agreement and requests the Subcontractor or supplier to continue such performance;
4. Include the termination and suspension provisions set forth in Section 8-1.13; and
5. Include Form FHWA-1273 (Required Contract Provisions, Federal-Aid Construction Contracts) (see Exhibit B to Agreement), and require all Subcontractors to include Form FHWA-1273 in all lower tiers subcontracts.

If any provision of any subcontract or supply agreement is inconsistent with any provision of the Contract Documents or the intent of the Contract Documents, then the Contract Documents shall control.

5-1.13B Disadvantaged Business Enterprises

5-1.13B(1) General

Use each DBE subcontractor as listed on the *Designation of Subcontractors* form and the *DBE Commitment* form unless the Engineer authorizes a substitution.

Notify the Engineer of any changes to your anticipated DBE participation. Submit this notification before starting the affected work.

Maintain records including:

1. Name and business address of each 1st-tier subcontractor
2. Name and business address of each DBE subcontractor, DBE vendor, and DBE trucking company, regardless of tier
3. Date of payment and total amount paid to each business

If the Contractor is DBE, include the date of work performed by your own forces and the corresponding value of the work.

Before the 15th day of each month, submit a *Monthly DBE Trucking Verification* form.

If a DBE is decertified before completing its work, the DBE must notify the Contractor in writing of the decertification date. If a business becomes a certified DBE before completing its work, the business must notify the Contractor in writing of the certification date. Submit the notifications. Upon work completion, complete a *Disadvantaged Business Enterprises (DBE) Certification Status Change* form. Submit the form within 30 days of Contract acceptance.

Upon work completion, complete a *Final Report – Utilization of Disadvantaged Business Enterprises (DBE), First-Tier Subcontractors* form. Submit it within ninety (90) days of Contract

acceptance. The County withholds $10,000 until the form is submitted. The County releases the withhold upon submission of the completed form.

5-1.13B(2) Performance of Disadvantaged Business Enterprises

Section 5-1.13(B)(2) applies if a DBE goal is shown on the Notice to Bidders.

DBEs must perform work or supply materials as listed in the *DBE Commitment* form, included in your Bid.

Do not terminate or substitute a listed DBE for convenience and perform the work with your own forces or obtain materials from other sources without authorization from the County.

The County authorizes a request to use other forces or sources of materials if it shows any of the following justifications:

1. Listed DBE fails or refuses to execute a written contract based on the plans and specifications for the project.
2. You stipulated that a bond is a condition of executing the subcontract and the listed DBE fails to meet your bond requirements.
3. Work requires a contractor's license and the listed DBE does not have a valid license under Contractors License Law.
4. Listed DBE fails or refuses to perform the work or furnish the listed materials.
5. Listed DBE's work is unsatisfactory and not in compliance with the Contract.
6. Listed DBE is ineligible to work on the project because of suspension or debarment.
7. Listed DBE becomes bankrupt or insolvent.
8. Listed DBE voluntarily withdraws with written notice from the Contract.
9. Listed DBE is ineligible to receive credit for the type of work required.
10. Listed DBE owner dies or becomes disabled resulting in the inability to perform the work on the Contract.
11. County determines other documented good cause.

Notify the original DBE of your intent to use other forces or material sources and provide the reasons. Provide the DBE with five (5) days to respond to your notice and advise you and the County of the reasons why the use of other forces or sources of materials should not occur. Your request to use other forces or material sources must include:

1. 1 or more of the reasons listed in the preceding paragraph
2. Notices from you to the DBE regarding the request
3. Notices from the DBE to you regarding the request

If a listed DBE is terminated or substituted, you must make good faith efforts to find another DBE to substitute for the original DBE. The substitute DBE must perform at least the same amount of work as the original DBE under the Contract to the extent needed to meet the DBE goal.

The substitute DBE must be certified as a DBE at the time of request for substitution.

Unless the County authorizes (1) a request to use other forces or sources of materials or (2) a good faith effort for a substitution of a terminated DBE, the County does not pay for work listed on the *DBE Commitment* form unless it is performed or supplied by the listed DBE or an authorized substitute.

5-1.13C Contingent Assignment of Subcontracts

Each Subcontract or supply agreement is assigned by the Contractor to the County, provided that

1. assignment is effective only after termination of the Contractor's performance by the County, for cause or convenience, and only for those Subcontracts and supply agreements that the County accepts by notifying the Subcontractor, supplier, and Contractor in writing; and

2. assignment is subject to any prior rights of the surety obligated under bond relating to the Contract.

When the County accepts the assignment of a Subcontract, the County assumes the Contractor's rights and obligations under the Subcontract.

5-1.13D Reserved

5-1.13E Joint Payments

The County hereby reserves the right, upon written notice to Contractor, to make, at any time, and from time to time, payments directly to each Subcontractor, and, if such rights shall be exercised by the County, then such amount shall be credited against the Contract Price due to Contractor hereunder and the County shall be relieved and released from the obligation to make such payment to Contractor and Contractor shall be relieved and released as to the County from the obligation to make such payments to each Subcontractor paid by the County, but not from any of the other obligations and responsibilities of Contractor to the County under the Contract Documents, or from any of the obligations and responsibilities of the Contractor to the Subcontractor under the subcontract.

5-1.13F Arm's Length Transactions and Commercially Useful Function of Subcontractors and Suppliers

To assure competitive bids and to assure that no bid rigging, unfair practices, collusion or conflicts of interest occur in connection with the Work, Contractor agrees that all agreements between Contractor and Subcontractors and suppliers for performance of the Work shall be pursuant to arm's length transactions, with unrelated and unaffiliated firms (a "related" or "affiliated" firm is one which is subject to the control of the same persons through joint ownership or otherwise). In all such agreements, each firm shall act in its own best interest, for compensation that reflects the fair market values of the materials or services that are the subject of the transaction.

Contractor further agrees that each Subcontractor and supplier for the Work will perform a commercially useful function (*i.e.* is responsible for the performance, management and supervision of a distinct element of the Work). A Subcontractor or supplier does not perform a commercially useful function when, for example: the Work is outside the firm's experience or qualifications; the firm provides little or no supervision of the Work; more than fifty percent (50%) of the Work designated to be performed by a Subcontractor is performed by a sub-subcontractor or supplier; the Subcontractor only purchases materials while performing little or no Work; the firm works for only one prime contractor; or the same employees work for the firm and the Contractor.

If, upon the County's request, Contractor fails to provide adequate assurances of arm's length transactions or that all Subcontractors and suppliers will perform a commercially useful function, Contractor shall remove such Subcontractor or supplier from the Project, exclude the cost associated with such firm from all Applications for Payment and Change Order requests and, if necessary, propose another Subcontractor or supplier to whom the County has no objection, without increase to the Contract Price or Contract Time.

5-1.13G5-1.13I Reserved

5-1.14–5-1.15 RESERVED

5-1.16 DESIGNATED REPRESENTATIVE

The Contractor shall name a single Designated Representative who shall be in attendance at the Project Site during performance of the Work. Contractor's Designated Representative shall be an employee of Contractor. Before executing the Agreement, the Contractor shall designate in writing the name~~,~~ of the Contractor's proposed Designated Representative who, on approval of the County, shall have full authority to represent and to act for the Contractor. A facsimile of the Designated Representative's signature shall be submitted to the Engineer. The Contractor's Designated Representative, acceptable to the County, shall:

.1 Be present at the Project Site at all times that any Work is in progress and at any time that any employee or Subcontractor of Contractor is present at the Project Site, including completion of the punch list;

.2 Attend all job meetings;

.3 Maintain oversight of the Project at all times;

.4 Have full authority to represent and act on behalf of the Contractor for all purposes under the Agreement;

.5 Supervise and direct the Work using his or her best skill and attention;

.6 Be responsible for the means, methods, techniques, sequences and procedures used for the Work;

.7 Adequately coordinate all portions of the Work; and

.8 Act as principal contact with the County and separate contractors, consultants, engineers and inspectors on the Project.

5-1.17 CHARACTER OF WORKERS

If a worker appears to the Engineer to be incompetent or acts disorderly or improperly, the Contractor shall, upon the Engineer's request, take the appropriate actions to preclude that worker from performing any further Work under this Contract.

5-1.18–5.19 RESERVED

5-1.20 COORDINATION WITH OTHER ENTITIES

5-1.20A General

Other entities may perform work at or near the job site and material sources at any time. Coordinate activities to avoid delays.

Each contractor or other entity performing work at or near the job or material site is responsible to the other for damage to work, persons, or property and for costs due to unnecessary delays.

5-1.20B Permits, Licenses, Agreements, and Certifications (PLACs)

5-1.20B(1) General

Comply with PLACs. The Department makes PLAC changes under Section 4-1.05. Maintain a copy of each PLAC at the job site.

5-1.20B(2) Reserved

5-1.20B(3) After Award

Confirm with the Engineer which after-award PLACs are obtained by the County and which are obtained by the Contractor. Unless otherwise specified in the Contract Documents, the Contractor shall be responsible for obtaining all PLACs that are required of appropriate for accomplishing the Work.

To make a change to an after-award PLAC obtained by the County, submit the proposed change. The Engineer will make an initial determination and may send the proposed change to the appropriate authority for consideration.

Obtain those PLACs to be issued to you and pay fees and costs associated with obtaining them. Submit copies of Contractor-obtained after-award PLACs for review.

5-1.20B(4) Contractor–Property Owner Agreement

If you elect to dispose of materials at locations other than those where arrangements have been made by the County, or, if material is to be disposed of and the County has not made arrangements for disposal of the material, you must make arrangements for disposing of the materials outside the highway right of way and will pay all costs involved. Arrangements must include, but not be limited to, entering into agreements with property owners and obtaining necessary permits, licenses and environmental clearances. Before disposing of any material outside the highway right of way, you must furnish to the Engineer satisfactory evidence that you have entered into agreements with the property owners of the site involved and have obtained the permits, licenses and clearances.

Take material to a permitted disposal site, or provide proof of waiver from the appropriate building or planning official for an exempt site.

You are responsible for obtaining necessary PLACs for new borrow sources or for exceeding limitations on previously cleared sources. No time extension or other waiver of working day requirements will be granted in the event you are delayed if an insufficient quantity of acceptable material is available from environmentally cleared sources to replace excavated material previously disposed of outside the County right of way.

5-1.20C Railroad Relations

If the Contract includes an agreement with a railroad company, the County makes the provisions of the agreement available in the in the section titled "Railroad Relations and Insurance Requirements." Comply with these requirements.

5-1.20D Reserved

5-1.20E Water Meter Charges

Section 5-1.20E applies if a bid item for water meter charges is shown on the Bid Item List. The charges are specified in a special provision for Section 5-1.20E.

The local water authority will install the water meters.

The charges by the local water authority include:

1. Furnishing and installing each water meter
2. Connecting to the local water authority's main water line, including any required hot tap or tee
3. Furnishing and installing an extension pipe from the main water line to the water meter
4. Sterilizing the extension pipe

Make arrangements and pay the charges for the installation of the water meters.

If a charge is changed at the time of installation, the County adjusts the lump sum price based on the difference between the specified charges and the changed charges.

5-1.20F Irrigation Water Service Charges

Reserved

5-1.21–5-1.22 RESERVED

5-1.23 SUBMITTALS

5-1.23A General

Shop Drawings are drawings, diagrams, schedules and other data specially prepared for the Work by the Contractor or a Subcontractor (of any tier), manufacturer, supplier or distributor to illustrate some portion of the Work.

Product Data are illustrations, standard schedules, performance charts, instructions, brochures, diagrams and other information furnished by the Contractor to illustrate materials or equipment for some portion of the Work.

Samples are physical examples that illustrate materials, equipment or workmanship and establish standards by which the Work will be judged.

Shop Drawings, Product Data, Samples and similar submittals (collectively, “Submittals” are not Contract Documents. Their purpose is to demonstrate the way by which the Contractor proposes to conform to the information given and the design concept expressed in the Contract Documents for those portions of the Work for which the Contract Documents require Submittals. Informational Submittals upon which the County is not expected to take responsive action may be so identified in the Contract Documents. Submittals that are not required by the Contract Documents may be returned by the County without action.

The Contractor shall review for compliance with the Contract Documents, approve and submit to the County Submittals required by the Contract Documents in accordance with the timeframes required by the Contract Documents and in such sequence as to cause no delay in the Work or in the activities of the County. Submittals which are not marked as reviewed for compliance with the Contract Documents and approved by the Contractor may be returned by the County without action. In all cases, Submittals shall be submitted to the County for review prior to commencing installation of any such Work. In the event that the County reasonably determines that all or any portion of any Submittal fails to comply with the requirements of the Contract Documents and/or such Submittals are not otherwise complete and accurate so as to require re-submission more than one (1) time, Contractor shall bear all costs (within the Contract Price) associated with the review and acceptance of such resubmitted Submittals. No adjustment to the Contract Time or the Contract Price shall be granted by the County to the Contractor on account of its failure to make timely submission of any Submittals.

By submitting Submittals, the Contractor represents that the Contractor has: (1) reviewed and approved them: (2) determined and verified materials, field measurements and field construction criteria related thereto, or will do so; and (3) checked and coordinated the information contained within such Submittals with the requirements of the Work and of the Contract Documents. Submittals must be submitted by the Contractor. Submittals by Subcontractors or suppliers will not be allowed.

The Contractor shall perform no portion of the Work for which the Contract Documents require submittal and review of Submittals until the respective Submittal has been reviewed and accepted by the County

The Work shall be in accordance with approved Submittals except that the Contractor shall not be relieved of responsibility for deviations from requirements of the Contract Documents by the County's approval of Submittals unless the Contractor has specifically informed the County in writing of such deviation at the time of Submittal and (1) the County has given written approval to the specific deviation as a minor change in the Work, or (2) a Change Order or Construction Change Directive has been issued authorizing the deviation. The Contractor shall not be relieved of responsibility for errors or omissions in Submittals by the County's approval thereof.

The Contractor shall direct specific attention, in writing or on resubmitted Submittals, to revisions other than those requested by the County on previous Submittals. In the absence of such written notice, the County's approval of a resubmission shall not apply to such revisions.

The Contractor shall not be required to provide professional services that constitute the practice of architecture or engineering unless such services are specifically required by the Contract Documents for a portion of the Work or unless the Contractor needs to provide such services in order to carry out the Contractor's responsibilities for construction means, methods, techniques, sequences and procedures. The Contractor shall not be required to provide professional services in violation of applicable law. If professional design services or certifications by a design professional related to systems, materials or equipment are specifically required of the Contractor by the Contract Documents, the County will specify all performance and design criteria that such services must satisfy. The Contractor shall cause such services or certifications to be provided by a properly licensed design professional, whose signature and seal shall appear on all drawings, calculations, specifications, certifications, and other Submittals prepared by such professional. Submittals related to the Work designed or certified by such professional, if prepared by others, shall bear such professional's written approval when submitted to the County. The County shall be entitled to rely upon the adequacy, accuracy and completeness of the services, certifications and approvals performed or provided by such design professionals, provided the County has specified to the Contractor all performance and design criteria that such services must satisfy. Pursuant to this Section 5-1.23, the County will review, approve or take other appropriate action on submittals only for the limited purpose of checking for conformance with information given and the design concept expressed in the Contract Documents. The Contractor shall not be responsible for the adequacy of the performance and design criteria specified in the Contract Documents.

Each sheet of a submittal must include:

1. Contract number
2. Contract Title
3. Structure name and number, if any

The County shall reject a submittal if it has any error or any omission.

Contractor shall convert foreign language documents to English and U.S. customary units.

Each Submittal must sequentially numbered, dated and appropriately titled with the specifications number and description.

Contractor shall maintain a sequential list of Submittals. With each individual Submittal, submit a copy of the updated list to the County.

Submit an action submittal before the start of the affected work to allow for review and corrections without work delays.

Except for test samples, obtain the County's authorization for action submittals before you perform work based on them.

Except for shop drawings and test samples, allow fifteen (15) days for review.

For a revised submittal, allow the same number of days for review as for the original submittal.

The time allowed for the review of a submittal starts when the County receives the submittal.

If the last day for submitting a document falls on a Saturday, Sunday, or holiday, it may be submitted on the next business day with the same effect as if it had been submitted on the day specified.

Do not change the scope of work on revised submittals.

The County's authorization of a submittal does not void any Contract part.

5-1.23B Action Submittals

5-1.23B(1) Shop Drawings

Submit shop drawings as specified and as otherwise required to control the work.

Each drawing and calculation sheet must be in black ink and sequentially numbered.

Each drawing sheet must:

1. Be 11 by 17 inches
2. Be on minimum of 20 lb paper
3. Have text of minimum nominal height of 5/32 inch

Each calculation sheet must:

1. Be 8-1/2 by 11 inches
2. Have text of a minimum 12-point font

Text and graphics must be legible for photocopying and reduction.

Calculations must demonstrate the design adequacy. Calculations specified as independently checked must be sealed and signed by an engineer who is registered as a civil engineer in the State and who did not seal and sign the drawings.

Allow twenty (20) days for the review.

If multiple sets are submitted simultaneously or an additional set is submitted before the review of a previously submitted set is complete, designate the sequence that the sets are to be reviewed. Allow review time specified plus fifteen (15) days for each additional set. A set consists of forty (40) or fewer sheets.

If drawings require corrections, the County:

1. Describes deficiencies
2. Stamps the drawings with the date that the review stopped
3. Returns the drawings

Show set revision number. Uniquely number each revised detail. Show the number in an inverted triangle near the revised portion of the detail. In a legend, describe and date the revision.

Upon review completion, the Department returns 1 copy that shows the authorized date.

To make a change to an authorized drawing, submit it as specified for a new submittal. Note the changes.

After the work shown on the drawings is complete, submit electronic copies of as-built drawings. Include an index of sheet numbers and titles on the 1st sheet for each structure. Arrange the drawings in the drawing-number order shown in the index.

5-1.23B(2) Product Data

Reserved

5-1.23B(3) Samples

Reserved

5-1.23B(4) Test Samples

For test samples, comply with Section 6-3.05G.

If requested, obtain the County's authorization for the material before incorporating the material represented by the test sample into the work.

5-1.23B(5) Quality Control Plans

Submit 7 copies of each authorized QC plan and make 1 copy available at each location where work is performed.

5-1.23B(7) Work Plans

Reserved

5-1.23C Informational Submittals

Informational submittals include:

1. Assignments
2. Certificates of compliance
3. Manufacturer instructions not associated with drawing submittals
4. Notifications
5. PLACs
6. Subcontracts

5-1.24 SOLID WASTE MANAGEMENT

You must recycle at least 50% of construction and demolition waste generated by the project.

The following are IWMA-Certified Recycling Facilities:

C&D Recycling Facility at Cold Canyon Landfill	805-549-8332
C&D Recycling Facility at Chicago Grade Landfill	805-466-2985
North SLO County Recycling	805-434-0043
API (roll-off/debris box company)	805-928-8689

R&R (a roll-off/debris box company)	805-929-8000
Recycling Facility at the Paso Robles Landfill	805-238-2028
Santa Maria Transfer Station	805-922-9255
Bedford Enterprises/SMART	805-922-4977

Complete and sign the *Recycling Plan* form under Section 5-1.23. This form must be submitted and approved before receiving the Notice to Proceed.

The form must show how at least 50% of the project construction and demolition will be recycled.

You must maintain receipts or other documentation for any facility or site that receives waste from the project.

Submit a complete and accurate *Disposal Report* form with original receipts and supporting documentation. This form must be submitted and approved before the Notice of Completion.

If you fail to submit the required information showing the 50% recycling goal was met, the County may impose a penalty equal to two (2%) percent of the total contract amount.

Copies of the *Recycling Plan* form and the *Disposal Report* form are included in the Forms section of the Appendices to these Contract Documents.

5-1.25 RESERVED

5-1.26 CONSTRUCTION SURVEYS

The County places stakes and marks under Chapter 12, "Construction Surveys," of the Caltrans *Surveys Manual*.

Submit a tentative schedule of all anticipated staking requests for the first thirty (30) working days of the Contract at the pre-construction conference. The Engineer must determine the staking request schedule reasonable before recognizing any requests for stakes or marks to be set. The schedule must correlate to any order of work specified.

If any vegetation needs to be cleared or grubbed, as determined by the Engineer, before stakes or marks can be set, then you must clear the obstructing vegetation for the proper placement of stakes or marks.

Submit your request for County-furnished stakes:

1. Once staking area is ready for stakes
2. On a *Request for Construction Stakes* form

After your submittal, the County starts staking within three (3) business days, unless noted otherwise by the Engineer.

Preserve stakes and marks placed by the County. If the stakes or marks are destroyed, the County replaces them at the County's earliest convenience. The County will deduct $875.00 for any moneys due or to become due to you for each stake or mark replaced or restored if the Engineer determines it was carelessly or willfully destroyed or damaged by your operations.

5-1.27 RECORDS

5-1.27A General

Reserved

5-1.27B Record Retention

Retain all project records for at least 3 years after final payment or the resolution of all claims (whichever is later), including but not limited to all records relating to:

1. Bid preparation
2. Overhead
3. Payrolls
4. Payments to subcontractors and suppliers
5. Cost accounting
6. Claims
7. Accounts receivable and payable
8. Invoices, receipts, subcontracts, and other agreements
9. Notes, correspondence, journals, ledgers, memoranda
10. Any documents generated and received in Contractor's performance of the Contract

Maintain the records in an organized way in the original format, electronic and hard copy, conducive to professional review and audit.

5-1.27C Record Inspection, Copying, and Auditing

Under Government Code § 8546.7 and 49 CFR 18.36, make your records available for inspection, copying, examination, and auditing by the State Auditor General, County, State, and Federal government representatives for the same time frame specified under Section 5-1.27B. The records of subcontractors and suppliers must be made available for inspection, copying, examination, and auditing by the State Auditor General, County, State, and Federal government representatives for the same period. Before Contract acceptance, the County representative notifies the Contractor, subcontractor, or supplier five (5) business days before inspection, copying, or auditing.

If an audit is to start more than thirty (30) days after Contract acceptance, the County representative notifies the Contractor, subcontractor, or supplier when the audit is to start.

5-1.27D Cost Accounting Records

Maintain cost accounting records for the project distinguishing between the following work cost categories:

1. Work performed based on bid item prices
2. Change order work. Distinguish this work by:
   - 2.1. Bid item prices
   - 2.2. Agreed price
   - 2.3. Force account
3. Work performed under potential claim records
4. Overhead
5. Subcontractors, suppliers, owner-operators, and professional services

Cost accounting records must include:

1. Final cost code lists and definitions
2. Itemization of the materials used and corresponding vendor's invoice copies
3. Direct cost of labor
4. Equipment rental charges
5. Workers' certified payrolls
6. Equipment:
   - 6.1. Size
   - 6.2. Type
   - 6.3. Identification number
   - 6.4. Hours operated

5-1.27E Reserved

5-1.27F As-Built Drawings

Contractor shall maintain at the Project site, and shall make available to the Engineer a set of as-built drawings, which shall be continuously updated during the prosecution of the Work, and shall

show all deviations and changes to the Work, existing conditions, and any other information the Engineer may request in a legible manner.

Contractor's obligation to keep as-built drawings current, and to make them available to the Engineer, is a condition precedent to the County's duty to process Applications for Payment. Contractor's obligations under this section shall survive completion of the Work or termination.

5-1.27G Daily Logs

The Contractor shall complete a daily report indicating location worked, total manpower per construction trade for each task, major equipment on site, each Subcontractor's manpower and equipment, weather conditions, and other related information involved in the performance of the Work. The daily report shall be completed on forms furnished by the Engineer and shall be submitted to the Engineer at the conclusion of each workday. The report shall comment on the daily progress and status of the Work within each major component of the Work.

5-1.28–5-1.29 RESERVED

5-1.30 NONCOMPLIANT AND UNAUTHORIZED WORK

Correct or remove and replace work that does not comply with the Contract, is unauthorized, or both. The County does not pay for any of the following:

1. Corrective, removal, or replacement work
2. Unauthorized work

If ordered, submit a work plan for the corrective, removal, or replacement work.

The County may reduce payment for noncompliant work left in place.

If you fail to comply promptly with an order under Section 5-1.30, the County may correct, remove, or replace noncompliant or unauthorized work. The County deducts the cost of this work.

5-1.31 JOB SITE APPEARANCE

Keep the job site neat. In areas visible to the public:

1. If practicable, dispose of debris removed during clearing and grubbing concurrently with its removal. If stockpiling is necessary, dispose of weekly.
2. Furnish trash bins for debris from construction. Place debris in trash bins daily.
3. Stack forms for falsework to be reused neatly and concurrently with their removal.

If the Contractor fails to clean up as provided in the Contract Documents, the County may do so and the County shall be entitled to reimbursement from the Contractor.

5-1.32 AREAS FOR USE

Occupy the highway only for purposes necessary to perform the work.

The County does not allow temporary residences within the County right of way.

5-1.33 EQUIPMENT

Clearly stencil or stamp at a clearly visible location on each piece of equipment except hand tools an identifying number and:

1. On compacting equipment, its make, model number, and empty gross weight that is either the manufacturer's rated weight or the scale weight
2. On meters and on the load-receiving element and indicators of each scale, the make, model, serial number, and manufacturer's rated capacity

Submit a list describing each piece of equipment and its identifying number

Upon request, submit manufacturer's information that designates portable vehicle scale capacities.

For proportioning materials, use measuring devices, material plant controllers, and undersupports complying with Section 9-1.02B.

Measuring devices must be tested and approved under California Test 109 by any of the following:

1. County Sealer of Weights and Measures
2. Scale Service Agency
3. Division of Measurement Standards Official

The indicator over-travel must be at least 1/3 of the loading travel. The indicators must be enclosed against moisture and dust.

Group measuring system dials such that the smallest increment for each indicator can be read from the location at which proportioning is controlled.

5-1.34–5-1.35 RESERVED

5-1.36 PROPERTY AND FACILITY PRESERVATION

5-1.36A General

Preserve property and facilities, including:

1. Adjacent property
2. County's instrumentation
3. ESAs
4. Lands administered by other agencies
5. Railroads and railroad equipment
6. Roadside vegetation not to be removed
7. Temporary work
8. Utilities
9. Waterways
10. Survey monuments

Immediately report damage to the Engineer.

If you cause damage, you are responsible.

The County may make a temporary repair to restore service to a damaged facility.

Install sheet piling, cribbing, bulkheads, shores, or other supports necessary to support existing facilities or support material carrying the facilities.

Maintain temporary facilities until they are no longer needed.

Dispose of temporary facilities when they are no longer needed.

Excavate and backfill as necessary to remove temporary facilities. Backfill with materials of equal or better quality and to a comparable density of surrounding materials and grade surface to match the existing grade and cross slope.

5-1.36B Landscape

If you damage plants not to be removed:

1. Dispose of them unless the Engineer authorizes you to reduce them to chips and spread the chips within the highway at locations designated by the Engineer
2. Replace them

Replace plants with plants of the same species.

Replace trees with 24-inch-box trees.

Replace shrubs with no. 15-container shrubs.

Replace ground cover plants with plants from flats. Replace *Carpobrotus* ground cover plants with plants from cuttings. Plant ground cover plants 1 foot on center.

If a plant establishment period is specified, replace plants before the start of the plant establishment period; otherwise, replace plants at least thirty (30) days before Contract acceptance.

Water each plant immediately after planting and saturate the backfill soil around and below the roots or ball of earth around the roots of each plant. Water as necessary to maintain plants in a healthy condition until Contract acceptance.

5-1.36C Railroad Property

If working on or adjacent to railroad property, do not interfere with railroad operations.

For an excavation on or affecting railroad property, submit work plans showing the system to be used to protect railroad facilities. Instead of the fifteen (15) days specified in Section 5-1.23B, allow sixty-five (65) days for the review of the plans.

If the Contract does not include an agreement with a railroad company, do not allow personnel or equipment on railroad property.

Prevent material, equipment, and debris from falling onto railroad property.

5-1.36D Nonhighway Facilities

The County may rearrange a nonhighway facility during the Contract. Rearrangement of a nonhighway facility includes installation, relocation, alteration, or removal of the facility.

The County may authorize facility owners and their agents to enter the highway to perform rearrangement work for their facilities or to make connections or repairs to their property. Coordinate activities to avoid delays.

Notify the Engineer at least three (3) business days before you contact the regional notification center under Govt Code § 4216 et seq. Failure to contact the notification center prohibits excavation.

In accordance with California Government Code section 4216 et seq., when Work is to be conducted in an area which is known, or reasonably known, to contain underground utilities or subsurface improvements, the Contractor shall contact Underground Service Alert of Southern California at least two (2) working days, but not more than fourteen (14) calendar days, in advance of any construction activity that will or could damage or affect any underground utility or subsurface improvement, and obtain an inquiry identification number. The Contractor shall delineate with white paint or other suitable markings the area to be excavated. The Contractor shall notify Underground Service Alert in the event of change in the Project limits or change in original Work previously shown on the plans or indicated in the specifications. When all Work is completed, the Contractor shall remove all markings for underground utilities. The County is not liable for any additional cost or damages incurred by Contractor due to a facility owner's failure to comply with Government Code section 4216 et seq.

Subsurface installations are any underground pipeline, conduit, duct, wire, or other structure, except nonpressurized sewer lines, nonpressurized storm drains, or other nonpressurized drain lines. "Approximate location of subsurface installations" means a strip of land not more than 24 inches on either side of the exterior surface of the subsurface installation. "Approximate location" does not mean depth. When the subsurface installation markings are no longer reasonably visible, the Contractor shall notify Underground Service Alert to remark those subsurface installations that may be affected by excavation to the extent necessary.

Before starting work that could damage or interfere with underground infrastructure, locate the infrastructure described in the Contract, including laterals and other appurtenances, and determine the presence of other underground infrastructure inferred from visible facilities such as buildings, meters, and junction boxes.

Notify the Engineer if the infrastructure described in the Contract cannot be found.

Underground infrastructure described in the Contract may be in different locations from described, and additional infrastructure may exist.

Upon discovering an underground main or trunk line not described in the Contract, immediately notify the Engineer and the infrastructure owner.

If necessary underground infrastructure rearrangement is not described in the Contract, the Engineer may order you to perform the work.

If you want infrastructure rearrangement different from that described in the Contract:

1. Notify the Engineer
2. Make an arrangement with the infrastructure owner
3. Obtain authorization for the rearrangement
4. The County does not adjust time or payment for rearrangement different from that described the Contract
5. Pay the infrastructure owner any additional cost

Immediately notify the Engineer of a delay due to:

1. The presence of main line underground infrastructure not described in the Contract or in a substantially different location
2. Rearrangement different from that described the Contract

The Contractor will not be entitled to damages or additional payment for delays attributable to utility relocations or alterations if correctly located, noted, and completed in accordance with Section 5-1.36D. The Contractor may be given an extension of time for unforeseen delays attributable to unreasonably protracted interference by utilities in performing work correctly shown on the plans.

The County will assume responsibility for the timely removal, relocation, or protection of existing main or trunkline utility facilities within the area affected by the Work if such utilities are not identified in the Contract Documents.

5-1.36E Survey Monuments

Protect survey monuments on and off the highway.

Pursuant to Section 8771(b) of the California Business and Professions Code, existing survey monuments that control the location of subdivisions, tracts, boundaries, roads, streets, or highways, or provide survey control that are within or adjacent to the Contractor's operations, shall be located and referenced by or under the direction of a licensed land surveyor or registered civil engineer prior to the time when any streets, highways, other rights-of-way, or easements are improved, constructed, reconstructed, maintained, resurfaced, or relocated.

In the event that any existing survey monument is disturbed in any way by the Contractor's operations as determined by a licensed land surveyor or registered civil engineer, they shall be reset accordingly and a corner record or Record of Survey shall be submitted to the county surveyor prior to the recording of a certificate of completion for the project.

Upon discovery of a survey monument not previously identified:

1. Stop work near the monument
2. Notify the Engineer

Do not resume work near the monument until authorized.

Full compensation for furnishing all labor, materials, tools, equipment, and incidentals, and for doing all the work involved in locating existing survey monuments by or under the direction of a licensed land surveyor or registered civil engineer, resetting any disturbed survey monument and indexing/filing a corner record or Record of Survey, shall be considered as included in the prices paid for the various contract items of work and no additional compensation will be allowed therefor.

5-1.37 MAINTENANCE AND PROTECTION

5-1.37A General

Maintain and protect work until the County has granted relief from maintenance or accepted the Contract.

Do not remove any padlock used to secure a portion of the work until the Engineer is present to replace it. Notify the Engineer at least three (3) days before removing the lock.

Prevent construction equipment that exceeds the maximum weight limits in Vehicle Code Division 15 from operating on completed or existing treated base, pavement, or structures.

5-1.37B Load Limits

5-1.37B(1) General

For areas within the project limits and subject to the Contractor providing protective measures and repairing related damage, construction equipment exceeding the size or weight limits in Vehicle Code Division 15 may move over:

1. Public roads within the highway
2. Treated base or pavement under construction or completed
3. Culverts and pipes
4. Structures not open to traffic that are designed for AASHTO HS20-44 live loading, except culverts and pipes. Before crossing one of these structures, submit the dimensions and maximum axle loadings of the equipment; and unless a material hauling equipment lane on a bridge is shown on the drawings, comply with the following specifications:
   - 4.1. The maximum loading on a bridge due to pneumatic-tired truck and trailer combinations must not exceed:
     - 4.1.1. 28,000 lb for single axles
     - 4.1.2. 48,000 lb for tandem axles
     - 4.1.3. 60,000 lb total gross load for single vehicles
     - 4.1.4. 110,000 lb total gross load for truck and trailer or semi-trailer combinations
   - 4.2. The loading on a bridge due to 2- and 3-axle pneumatic tired earthmovers must not exceed that shown in the following table:

Allowable Construction Loading on Bridges for 2- and 3-Axle Earthmovers

Bridge girder center-to-center spacing (feet)	Maximum axle loading (pounds)
4	28,000
5	29,000
6	30.000
7	32,000
8	34,000
9	37,000
10 and over	40,000

NOTE: Minimum axle spacing:

For 2-axle earthmovers:
Axles 1 to 2 = 20 feet

For 3-axle earthmovers:
Axles 1 to 2 = 8 feet
Axles 2 to 3 = 20 feet

5. Completed or existing base, pavement, and structures under Caltrans' *Transportation Permits Manual*, whether open to the public or not

Loads imposed on existing, new, or partially completed structures must not exceed the load carrying capacity of the structure or any portion of the structure as determined by AASHTO LRFD with interims and California Amendments, Design Strength Limit State II. The f'_c to be used in computing the load carrying capacity must be the smaller of the following:

1. Actual compressive strength at the time of loading

2. Value of f'_c shown on the plans for that portion of the structure or 2.5 times the value of f_c shown on the plans for portions of the structure where no f'_c is shown

5-1.37B(2) Increased Load Carrying Capacity

You may submit a request to the County to redesign a structure to increase its load carrying capacity.

The Department does not authorize a redesign for any of the following:

1. Load increase more than 130,000 lb per single axle or pair of axles less than 8 feet apart
2. Total gross vehicle weight more than 330,000 lb

Your request to the County must include:

1. Description of the structure or structures
2. Detailed overload description
3. Date the revised plans are required
4. Signed statement agreeing to pay the costs, including the engineering costs
5. Signed statement agreeing to waive a time extension request for any delay

If the County authorizes a redesign to strengthen the structure, the Engineer notifies you of the change's estimated cost and availability date of the revised plans. If the cost and date are satisfactory to you, the Engineer prepares a *Change Order* for the changes.

5-1.37B(3) Material Hauling Equipment Lane on Bridges

Section 5-1.37B(3) applies to a bridge constructed with a material hauling equipment lane.

You may cross the bridge with pneumatic-tired material hauling equipment that exceeds the size and weight limits specified but that does not exceed the load limits shown on the material hauling equipment loading diagram on the plans.

For each bridge with a material hauling equipment lane:

1. Construct a minimum 150-foot approach at each bridge end to a grade that provides a smooth transition to the bridge roadway grade. Maintain these approaches in a smooth and uniform condition during the operation of the equipment.
2. Operate equipment in a way that prevents jolting and bouncing of the equipment while crossing the bridge.
3. Confine equipment to the material hauling lane using temporary barriers unless the plans show that the entire bridge may be used for hauling equipment and the permanent barriers are completed.
4. At most 1 piece of equipment may be on the bridge at one time.

If ordered, verify the weight of loaded material hauling equipment by weighing. The County furnishes individual wheel or axle type scales. The County weighs the equipment within the project limits and within the highway at a location accessible to the equipment. You determine the exact weighing location. Install and maintain the scales. Installing and maintaining scales is Change Order Work.

5-1.38 MAINTENANCE AND PROTECTION RELIEF

You may request relief from maintenance and protection responsibilities on a completed work portion. The work portion must have been completed under the Contract and to the Engineer's satisfaction. Work parts eligible for relief include:

1. Completed 0.3 mi of roadway or 0.3 mi of one roadway of a divided highway or frontage road including:
   - 1.1. Planned roadway protection work
   - 1.2. Lighting
   - 1.3. Required traffic control
   - 1.4. Access facilities

2. Bridge or other major structure
3. Complete unit of a traffic control signal system or a highway lighting system
4. Nonhighway facility constructed for another agency

If relieved by the County, you are not required to perform further work on that portion of work. On a relieved portion of work, you are not responsible for damage, including damage caused by traffic or the elements, except for that caused by your own activities or negligence.

However, nothing in this section will be construed as relieving you of full responsibility for making good any defective work or materials found at any time before the formal written acceptance of the entire Contract by the Director.

5-1.39 DAMAGE REPAIR AND RESTORATION

5-1.39A General

Before Contract acceptance, restore damaged work to the same state of completion as before the damage. Restoration of damaged work includes restoration of erected falsework and formwork. See also Section 6-3.06 regarding guarantee and corrective work.

The Department does not adjust payment for repair or restoration that the Engineer determines was caused by your failure to construct the work under the Contract or protect the work.

5-1.39B Damage Caused by an Act of God

Under Public Contract Code § 7105, the Department pays for repair or restoration to damaged work in excess of 5 percent of the total Bid if the damage was caused by an act of God.

Submit a request for repair or restoration work payment before performing work other than emergency work.

The Engineer determines the repair or restoration work cost under Section 9-1.04 except markups are not allowed.

The County may change the Contract for the areas requiring repair or restoration. If the cost for the changes exceeds the repair or restoration cost based on the Bid Item List, the Engineer determines the payment adjustment under Section 9-1.04.

5-1.39C Landscape Damage

5-1.39C(1) General

Repair slopes or other existing facilities that were damaged after starting job site activities and before starting plant establishment.

As ordered, replace plants that have been damaged from either or both of the following conditions:

1. Ambient air temperature falling below 32 degrees F during the plant establishment period
2. County or its supplier restricting or stopping water delivery during the plant establishment period

This plant replacement work is Change Order Work.

5-1.39C(2) Plant Establishment Period of 3 Years or More

Section 5-1.39C(2) applies if a plant establishment period of 3 years or more is shown on the Agreement.

Perform work specified in Section 5-1.39C(2) as ordered.

Repair slopes or other existing facilities that were damaged before starting job site activities. This work is Change Order Work.

Repair slopes or other existing facilities that were damaged by a change in the runoff pattern from that which existed on the date of the Notice to Bidders and was the result of work by others within the highway. This work is Change Order Work.

Replace plants and repair slopes, irrigation systems, and other highway facilities damaged as a result of rain during the plant establishment period. The County pays 1/2 the accumulated costs in excess of the greater of 5 percent of the plant establishment work or $2,000; the Contractor pays the other 1/2. The Engineer determines the repair cost under Section 9-1.04.

5-1.40–5-1.41 RESERVED

5-1.42 REQUESTS FOR INFORMATION

Submit an RFI upon recognition of any event or question of fact arising under the Contract.

The Engineer responds to the RFI within ten (10) days. Proceed with the work unless otherwise ordered. You may protest the Engineer's response by:

1. Submitting an Initial Potential Claim Record within five (5) days after receiving the Engineer's response.
2. Complying with section 5-1.43

5-1.43 CLAIMS

5-1.43A General

5-1.43A(1) Mandatory Procedure and Condition Precedent

Any demand or assertion by the Contractor seeking an adjustment of Contract Price and/or Contract Times, or other relief, for any reason whatsoever, must be in strict compliance with the requirements of this Section 5-1.43. For purposes of this Section 5-1.43, any and all work relating to any such demand or assertion shall be referred to as “Disputed Work”, regardless of whether the basis of the demand or assertion arises from an interpretation of the Contract Documents, an action or inaction of the Contractor, the Engineer, or the County, or any other event, issue, or circumstance. The Contractor shall bear all costs incurred in complying with the provisions of this Section 5-1.43.

Compliance with these requirements is a condition precedent to the Contractor’s ability to exercise any rights or remedies that may otherwise be available to Contractor under the Contract Documents or any applicable Laws or Regulations relating to the Claim. No action or inaction by the Contractor or the Engineer to try to resolve any Claim(s) through agreement (including Change Order), mediation, settlement, or any other means shall excuse the Contractor from complying with the requirements of this Section 5-1.43.

For Claims less than or equal to $375,000, Section 5-1.43 shall be interpreted in a manner consistent with Public Contract Code sections 20104 and 20104.2. The substance of Public Contract Code sections 20104 and 20104.2 have been incorporated into Section 5-1.43 in a manner that is consistent with the notice requirements provided in the Contract Documents. For purposes of Public Contract Code 20104 and 20104.2, a Claim shall not be deemed submitted until a Notice of Final Claim is properly submitted.

5-1.43A(2) Contractor’s Continuing Obligations.

At all times during the processing of the Contractor’s potential Claim, the Contractor shall diligently proceed with the performance of the Disputed Work and other Work, unless otherwise specified or directed by the Engineer.

The Contractor shall provide the Engineer the opportunity to examine the site of the Disputed Work as soon as reasonably possible, and in no event later than five (5) days from the date of the Initial Notice of Potential Claim. Throughout the processing of the Contractor’s potential Claim, the Contractor shall provide the Engineer a reasonable opportunity to examine the site of the Disputed Work within five (5) days of the date of Engineer’s written request therefor.

The Contractor shall promptly respond to any requests for further information or documentation regarding the Contractor’s potential Claim. If the Contractor fails to provide an adequate written

response to the Engineer within fifteen (15) days of the Engineer's written request for such further documentation or information, the Contractor shall be deemed to have waived its Claim. If the further documentation or information requested by the Engineer would, in the opinion of the Engineer, reasonably take the Contractor more than fifteen (15) days to comply with, the written request shall provide the Contractor a specific response deadline that is commensurate to a reasonable response time.

Throughout the performance of the Disputed Work, the Contractor shall maintain records that provide a clear distinction between the incurred direct costs of Disputed Work and other Work. The Contractor shall allow the Engineer access to its Project records deemed necessary by the Engineer to evaluate the potential Claim within fifteen (15) days of the date of the Engineer's written request. The Contractor's failure to comply with the provision of this Section 5-1.43 shall constitute a waiver of the Contractor's Claim.

All Subcontractor's and material supplier's claims of any type shall be brought only through Contractor pursuant to the provisions of this Section 5-1.43. Under no circumstances shall any Subcontractor or material supplier make any direct claim against County.

Except where provided by law, or elsewhere in these Contract Documents, THE COUNTY SHALL NOT BE LIABLE FOR SPECIAL OR CONSEQUENTIAL DAMAGES AND THE CONTRACTOR SHALL NOT INCLUDE THEM IN ITS CLAIMS. Contractor shall be limited in its recovery on any Claim(s) to the adjustments allowed in the Contract Documents.

During each step in the processing of the Contractor's Claim, each notice shall be accompanied by the Contractor's written statement that the adjustment or relief claimed is the entire adjustment or relief to which the claimant believes it is entitled as a result of the event, issue, or circumstance giving rise to the Claim.

The Contractor shall be responsible for providing written evidence of the date any of the notices referenced in Section 5-1.43 above were provided to Engineer, and shall provide Engineer a copy of such written evidence within five (5) days of a request thereof. Such evidence shall be either a written receipt of actual delivery from U.S. Postal Service or other reputable delivery service, or by the recipient's written acknowledgement of receipt.

The rights of the Engineer to request further records, documents, or information from the Contractor regarding a Claim are for the sole benefit of the Engineer, and may be exercised at their sole discretion. Any failure by the Engineer to exercise its rights does not provide the Contractor any excuse for not providing all of the records, documents, and other information it is requested to provide under Section 5-1.43 or any other provision of the Contract Documents.

Under no circumstances may the Contractor submit an Initial Notice of Potential Claim, Supplemental Notice of Potential Claim, or Notice of Final Claim after the date of final payment.

5-1.43A(3) Claim Identification Number

The Contractor shall assign an exclusive identification number for each potential Claim, determined by chronological sequencing, based on the date of the potential Claim. The nature and circumstances involved in the dispute shall remain consistent throughout the processing of the Claim.

The exclusive identification number for each Claim shall be used on the following corresponding documents:

1. Initial Notice of Potential Claim.
2. Supplemental Notice of Potential Claim.
3. Notice of Final Claim.
4. Contractor's written statement of Claims

5-1.43B Initial Notice of Potential Claim

Promptly upon becoming aware of any event, issue, or circumstance which the Contractor believes provides a basis for an adjustment of Contract Price and/or Contract Times, or other relief, Contractor shall provide a signed written Initial Notice of Potential Claim to the Engineer. The Initial Notice of Potential Claim shall be submitted before commencing any Disputed Work, or within five (5) days of the event, issue, or circumstance from which the Claim arises, whichever is earlier.

The Initial Notice of Potential Claim shall clearly state the Contractor's grounds for seeking an adjustment in Contract Price and/or Contract Times or other relief, the nature and circumstances of the Disputed Work, the relief or adjustment sought by the Contractor for the Disputed Work. The Initial Notice of Potential Claim shall be submitted on a form furnished by the Engineer and shall be certified under penalty of perjury with reference to the California False Claims Act, Government Code Sections 12650-12655.

After reviewing the Initial Notice of Potential Claim, the Engineer may provide a written response thereto or may decide to delay providing a response until the Contractor provides further information regarding the potential Claim pursuant to the provisions of this Section 5-1.43.

5-1.43C Supplemental Notice of Potential Claim

Within fifteen (15) days of submitting the Initial Notice of Potential Claim, the Contractor shall submit a signed Supplemental Notice of Potential Claim to Engineer that provides the following information:

1. The complete nature and circumstances of the dispute which caused the potential Claim.
2. The contract provisions that provide the basis of the potential Claim.
3. The requested adjustment of Contract Price, if any, and the estimated cost of the potential Claim, including an itemized breakdown of individual costs and how each estimate was determined.
4. The requested adjustment of Contract Time, if any, and a time impact analysis of the schedule that illustrates the effect on the scheduled completion date due to schedule changes or disruptions.

The information provided by the Contractor shall provide the Contractor's complete reasoning for additional compensation or adjustments and shall be as complete as reasonably possible.

The Supplemental Notice of Potential Claim shall be submitted on a form furnished by Engineer and shall be certified under penalty of perjury with reference to the California False Claims Act, Government Code Sections 12650-12655. If at any time the estimated cost of the potential Claim or effect on the Progress Schedule changes, Contractor shall update information in items 3 and 4 above as soon as the change is recognized and submit this information to Engineer.

If the Disputed Work is not completed within thirty (30) days, the Contractor shall, every thirty (30) days until the Disputed Work ceases, submit to the Engineer an updated Supplemental Notice of Potential Claim that shall update and quantify all of the information required in the Supplemental Notice of Potential Claim. The Contractor's failure to so quantify costs and schedule impacts every thirty (30) days shall result in a waiver of the Claim for that 30-day period. Any supplemental notice or updated notice that states that the requested adjustment of Contract Price and/or Contract Time will be provided or determined at a later date, or that any damages, costs, schedule impacts, and/or any other analysis will be provided or determined at a later date, shall be deemed to be not in compliance with this Section 5-1.43, and shall result in the Contractor waiving its Claim.

After reviewing the Supplemental Notice of Potential Claim or updated Supplemental Notice of Potential Claim, the Engineer may provide a written response thereto or may decide to delay providing a response until the Contractor provides further information regarding the potential Claim pursuant to the provisions of this Section 5-1.43.

5-1.43D Notice of Final Claim.

As soon as reasonably practical upon completion of the Disputed Work, and no later than thirty (30) days after completion of the Disputed Work, the Contractor shall submit to the Engineer a Notice of Final Claim containing a full and final documentation of the Claim including, but not limited to, the following information:

1. A detailed factual narration of events fully describing the nature and circumstances that caused the dispute, including, but not limited to, necessary dates, locations, and items of Work affected by the dispute.

2. The specific provisions of the Contract that support the Claim and a statement of the reasons these provisions support and provide a basis for entitlement of the Claim.

3. When additional monetary compensation is requested, the exact amount requested calculated in conformance with the Contract Documents and shall include an itemized breakdown of individual costs. These costs shall be segregated into the following cost categories:

   a. Labor – A listing of individuals, classifications, regular hours and overtime hours worked, dates worked, hourly labor rates, and other pertinent information related to the requested reimbursement of labor costs.

   b. Materials – Invoices, purchase orders, location of materials either stored or incorporated into the work, dates materials were transported to the project or incorporated into the work, and other pertinent information related to the requested reimbursement of material costs.

   c. Equipment – Listing of detailed description (make, model, and serial number), hours of use, dates of use, and equipment rates. Equipment rates shall be at the applicable State rental rate as listed in the Department of Transportation publication entitled "Labor Surcharge and Equipment Rental Rates," in effect when the Disputed Work was performed.

   d. Other categories as specified by Contractor or Engineer.

4. When an adjustment of Contract Time is requested the following information shall be provided:

   a. The chronology of the specific dates for which Contract Time is being requested.

   b. The specific reasons for entitlement to a Contract Time adjustment.

   c. The specific provisions of the Contract that provide the basis for the requested Contract Time adjustment.

   d. A detailed time impact analysis of the schedule. The time impact analysis shall show the effect of changes or disruptions on the scheduled completion date to demonstrate entitlement to a Contract Time adjustment.

5. The listing, identification, and production of copies of all documents the Contractor believes support its Claim and the date, time, circumstances, details and substance of any oral communications that the Contractor believes support the Claim.

   The Notice of Final Claim shall be submitted on a form furnished by the Engineer and shall be certified under penalty of perjury with reference to the California False Claims Act, Government Code Sections 12650-12655.

   Information submitted subsequent to the Notice of Final Claim will not be considered.

   No Notice of Final Claim will be considered that does not have the same nature and circumstances, and basis of Claim as those specified on the Initial and Supplemental Notices of Potential Claim.

5-1.43E Response to Notice of Final Claim.

5-1.43E(1) Date of Final Decision in Response to Final Claim

In the event a valid written decision is not provided to the Contractor within the time prescribed in this Section 5-1.43, the Claim shall be deemed denied on the last day a written response was due. The date upon which the Claim is approved or denied pursuant to the provisions of this Section 5-1.43, shall constitute the date of the final decision on the Claim under the provisions of this Section 5-1.43. The date of the final decision on a Claim can only be changed by a subsequent writing signed by Engineer and County that expressly states that the date of the final decision on the Claim has been changed to a new specific date.*"*

5-1.43E(2) Public Contract Code Requirements for Claims Less Than or Equal to $375,000.

5-1.43E(2)(a) Written Response to Claims of less than $50,000.

For Claims of less than fifty thousand dollars ($50,000), the Engineer shall respond in writing to the Notice of Final Claim within forty-five (45) days of receipt thereof, or may request, in writing, within thirty (30) days of said receipt, any additional documentation relating to the Claim or any defenses to the Claim the County may have against the Contractor. The Contractor shall comply with the request within the reasonable time deadlines provided by the Engineer in the request. If additional information is thereafter required, it shall be requested and provided upon mutual agreement of the County and the Contractor. The written response to the Notice of Final Claim shall be submitted to the Contractor within fifteen (15) days after receipt of the further documentation or within a period of time no greater than that taken by the Contractor in producing the additional information, whichever is greater.

5-1.43E(2)(b) Written Response to Claims Over $50,000 and Less Than or Equal to $375,000

For Claims of over fifty thousand dollars ($50,000) and less than or equal to three hundred seventy-five thousand dollars ($375,000), the Engineer shall respond in writing to the Notice of Final Claim within sixty (60) days of receipt thereof, or may request, in writing, within thirty (30) days of said receipt, any additional documentation relating to the Claim or any defenses to the Claim the County may have against the Contractor. The Contractor shall comply with the request within the reasonable time deadlines provided by Engineer in the request. If additional information is thereafter required, it shall be requested and provided upon mutual agreement of the County and the Contractor. The written response to the Notice of Final Claim shall be submitted to the Contractor within thirty (30) days after receipt of the further documentation, or within a period of time no greater than that taken by the Contractor in producing the additional information or requested documentation, whichever is greater.

5-1.43E(2)(c) Right to Meet and Confer For Claims Less Than or Equal to $375,000

For Claims less than or equal to $375,000, if the Contractor disputes the written response to the Claim, or if a written response is not submitted within the time prescribed above, the Contractor may so notify the Engineer and County, in writing, either within fifteen (15) days of receipt of the written response or within fifteen (15) days of the Engineer's failure to respond within the time prescribed, respectively, and demand an informal conference to meet and confer for settlement of the issues in dispute. Upon such a timely demand by the Contractor, the Engineer shall schedule a meet and confer conference within thirty (30) days for settlement of the dispute. Within thirty (30) days after such conference, a final written response to the Claim shall be issued which will serve as the new final decision on the Claim. Pursuant to Public Contract Code section 20104.6, the County shall not fail to pay money as to any portion of a Claim which is undisputed, except as otherwise provided in the Contract Documents.

5-1.43E(3) For Claims Greater Than $375,000

For Claims over three hundred seventy-five thousand dollars ($375,000), the Engineer shall respond in writing to the Notice of Final Claim within sixty (60) days of receipt thereof Claim, or may request, in writing, within forty-five (45) days of said receipt, any additional information or documentation relating to the Claim or any defenses to the Claim the County may have against the Contractor. The Contractor shall comply with the request within the reasonable time deadline provided by the Engineer in the request. If any additional information is thereafter requested by

the Engineer, it shall likewise be provided by the Contractor within the reasonable time deadline provided by the Engineer in such follow-up request. The written response to the Notice of Final Claim shall be submitted to the Contractor within thirty (30) days after receipt of such further information and documentation, or within a period of time no greater than that taken by the Contractor in producing the additional information or documentation, whichever is greater. The Contractor may request an informal conference to meet and confer for settlement of the issues in dispute, but the Contractor shall have no right to demand such a conference. Neither the requesting of any such conference by the Contractor or the Engineer, nor the holding of such conference shall affect the date of the final decision on the Claim. No written communications of the Engineer and/or the County sent to the Contractor after any such conference will change the date of the final decision on the Claim unless the writing expressly states that the date of the final decision is being changed to a new specific date.

5-1.43F Exclusive Remedy

The administration of a Claim as provided in this Section 5-1.43, including the Contractor's performance of its duties and obligations specified in this Section 5-1.43 is the Contractor's sole and exclusive remedy for disputes of all types pertaining to the payment of money, extension of time, the adjustment or interpretation of the Contract Documents terms or other contractual or tort relief arising from the Contract Documents. This exclusive remedy and the limitation of liability (expressed herein and elsewhere throughout the Contract Documents) apply notwithstanding the completion, termination, suspension, cancellation, breach, or rescission of the Work or the Contract Documents, the negligence or strict liability of the County, its representatives, consultants, or agents, or the transfer of Work or the Project to the County for any reason whatsoever.

The Contractor waives and covenants not to raise any claims of waiver, estoppel, release, bar, or any other type of excuse for non-compliance with these Section 5-1.43 requirements. Compliance with the procedures described in this Section 5-1.43 is a condition precedent to the right to file a Government Code Claim, commence litigation, or commence any other legal action. Claim(s) or issue(s) not raised in a timely Claim submitted under this Section 5-1.43 may not be asserted in any subsequent Government Code Claim, litigation, or legal action. The County shall not be deemed to waive any provision under this Section 5-1.43, if at the County's sole discretion, a claim is administered in a manner not in accordance with this Section 5-1.43.

5-1.43G Government Code Claim Requirements

For all Claims not resolved as a result of the Section 5-1.43 procedures, the Contractor must submit each Claim in a Government Code Section 910 form of claim for final investigation and consideration of its settlement prior to initiation of any litigation on any such Claim, as required by Government Code Section 945.4. Pursuant to Government Code Section 930.2, the one-year period in Government Code Section 911.2 is hereby reduced to 150 days. This time deadline is measured from the accrual date of each separate cause of action.

5-1.43H Tolling

For each unresolved Claim properly processed by the Contractor in accordance with Section 5-1.43, the running of the period of time within which a Government Code claim must be submitted shall be tolled during the time the Contractor is processing the Claim in compliance with Section 5-1.43. Under no circumstances shall the time for submitting a Government Code Claim be extended beyond 150 days of the date of the final decision on the Claim under Section 5-1.43. The Contractor waives the right to pursue or submit any Claims not processed in accordance with Section 5-1.43.

Other than as expressly provided above, the time deadline for filing a Government Code claim shall not be tolled by any action or inaction by the Contractor, the Engineer, or the County, including but not limited to any action or inaction to try to resolve the Claim through negotiation, mediation, settlement, agreement (including Change Order), or by any other means, other than by a separate written tolling agreement expressly approved as to form (on the face of the agreement) by the County.

5-1.44–5-1.45 RESERVED

5-1.46 FINAL INSPECTION AND CONTRACT ACCEPTANCE

When you complete the work, request the Engineer's final inspection.

If the Engineer determines that the Work is complete, the Engineer makes a formal recommendation to the Director to start the County's internal procedures that allow the Board of Supervisors to accept the Work at a future Board of Supervisors meeting.

5-1.47–5-1.50 RESERVED

6 CONTROL OF MATERIALS

6-1 GENERAL

6-1.01 GENERAL

Section 6 includes specifications related to control of materials.

6-2 MATERIAL SOURCE

6-2.01 GENERAL

Material incorporated into the work must be new unless specific materials specifically allow for recycled material.

6-2.02 MATERIAL SOURCE

Before the preconstruction conference, submit material source information on a *Caltrans Notice of Materials to Be Used* form.

6-2.03 COUNTY-FURNISHED MATERIALS

If the County furnishes the material:

1. At the job site, unload and store the material
2. At a location other than the job site, deliver the material to the job site and store it

The Engineer orders the return and disposal of surplus County-furnished material. This returning and disposing of material is Change Order Work.

You are responsible for the cost of replacing Department-furnished material. The County deducts replacement costs. Department-furnished material not used in the work remains the property of the County.

6-2.04 LOCAL MATERIALS

Local material must be:

1. Mineral material, including rock, sand, or gravel, or earth
2. Selected material or material procured from an established commercial source and not local borrow
3. Procured or produced from a source in the work vicinity specifically for project use

6-2.05 BUY AMERICA

6-2.05A General

Reserved

6-2.05B Crumb Rubber (Public Resources Code § 42703(D))

Furnish crumb rubber with a certificate of compliance. Crumb rubber must be:

1. Produced in the U.S
2. Derived from waste tires taken from vehicles owned and operated in the U.S

6-2.05C Steel and Iron Materials

Furnish steel and iron materials to be incorporated into the work with certificates of compliance. Steel and iron materials must be produced in the U.S. except:

1. Foreign pig iron and processed, pelletized, and reduced iron ore may be used in the domestic production of the steel and iron materials [60 Fed Reg 15478 (03/24/1995)];

2. If the total combined cost of the materials does not exceed the greater of 0.1 percent of the total Bid or $2,500, materials produced outside the U.S. may be used.

Production includes:

1. Processing steel and iron materials, including smelting or other processes that alter the physical form or shape (such as rolling, extruding, machining, bending, grinding, and drilling) or chemical composition;
2. Coating application, including epoxy coating, galvanizing, and painting, that protects or enhances the value of steel and iron materials.

6-3 QUALITY

6-3.01 GENERAL

Store materials and samples in a way that preserves the quality and facilitates prompt inspection.

6-3.02 SPECIFIC BRAND OR TRADE NAME AND SUBSTITUTION

A reference to a specific brand or trade name establishes a quality standard and is not intended to limit competition. You may use a product that is equal to or better than the specified brand or trade name if authorized.

Submit a or equal substitution request with a time period that:

1. Follows Contract award
2. Allows thirty (30) days for review
3. Causes no delay

Include substantiating data with the or equal substitution request that proves that substitution:

1. Causes no delay
2. Is of equal or better quality and suitability

If the data provided to the County in support of a or equal substitution request is incomplete or otherwise insufficient to prove the two points above, the Engineer may either deny the request outright or provide the Contractor the opportunity to provide additional information in support of its request. If the Contractor is provided an opportunity to resubmit additional information, the County has 30 days to review such additional information. The Contractor shall not be entitled to any extension of the Contract Time for the time involved in the or equal substitution request process.

6-3.03 RESERVED

6-3.04 QUALITY CONTROL

Material production and testing equipment must measure accurately and precisely.

Prepare and maintain QC records, including:

1. Inspection types, results, and dates
2. Testing types, results, and dates
3. Inspector names and certificates
4. Acceptance criteria
5. Corrective actions

6-3.05 QUALITY ASSURANCE

6-3.05A General

The County uses a QAP to ensure material complies with the Contract. The County may use multiple QA methods for a material.

Allow the County to record, including photograph and video record, to ensure a material is produced to comply with the Contract.

You may examine the records and reports of tests the County performs if they are available at the job site.

Schedule work to allow time for QA.

The County deducts testing costs for work that does not comply with the Contract.

The County may retest material previously tested and authorized for use. If the County notifies you of a retest, furnish resources for retesting.

For a material specified to comply with a State Specification number, the material may comply with a later version of the specification. Obtain State Specifications from METS.

For a material specified to comply with a property shown in the following table, the County tests under the corresponding California Test shown:

California Tests

Property	California Test
Relative compaction	216 or 231
Sand equivalent	217
Resistance (R-value)	301
Grading (sieve analysis)	202
Durability index	229

6-3.05B Source Inspection Expense Deductions

For each item shown in the following table, the County deducts the corresponding amount shown:

Source Inspection Expense Deductions

Item	Distance[a]	Deduction
Steel pipe piling Prestressing system Precast concrete members specified as tier 1 or tier 2 in Section 90-4.01D(1) Epoxy-coated reinforcement Structural steel for sign structures Miscellaneous metal	> 300 > 3,000	$5,000 $8,000
Extinguishable message signs Variable message signs Changeable message signs Service equipment enclosures Telephone demarcation cabinets Closed circuit television cabinets Weigh-in-motion cabinets Highway advisory radio cabinets	> 300	$2,000
Poles for electrical systems	> 300	$1,000 for ≤10 poles and $1,000 for every multiple of 10 poles thereafter
Structural steel	> 300 > 3,000	The greater of: 1. $5,000 2. $0.02/lb The greater of: 1. $8,000 2. $0.036/lb
Structural steel paint	> 300 > 3,000	The greater of: 1. $2,000 2. $0.01/sq ft The greater of: 1. $5,000 2. $0.015/sq ft
Check samples	> 300	$2,000
High mast poles	> 300 > 3,000	$2,500 $5,000
PTFE bearings, ≤ 2 lots	> 300 > 3,000	$5,000 $15,000
PTFE bearings, > 2 lots	> 300 > 3,000	$10,000 $20,000

[a]Distance is air-line miles from both Sacramento and Los Angeles to the inspection source.

6-3.05C Material Source Inspection and Testing

Section 6-3.05C applies if a material is to be inspected or tested at the source.

Submit an inspection request form:

1. At least three (3) business days before the requested inspection date for a material source within California.
2. At least five (5) business days before the requested inspection date for a material source outside California but within the U.S.
3. Fifty (50) days before the planned production start for a material source outside the U.S. Notify the Engineer at least twenty (20) days before the actual start.

For the inspection request form and the procedure for its submittal, go to the METS website. Notify the Engineer of each submittal.

6-3.05D Job Site Inspection and Testing

Section 6-3.05D applies if a material is to be inspected or tested at the job site.

The material must be authorized for use before it is incorporated into the work.

6-3.05E Certificates of Compliance

Section 6-3.05E applies (1) where a certificate of compliance is specified and (2) if any material is produced outside the U.S.

Submit a certificate:

1. Before the material is incorporated into the work.
2. For each lot of the material. Identify the lot on the certificate.
3. Signed by the producer of the material and stating that the material complies with the Contract.

6-3.05F Test Data, Test Reports, and Evaluation Reports

Reserved

6-3.05G Test Samples

Section 6-3.05G applies where a test sample is specified or if a test sample is requested.

Notify the Engineer ten (10) days before taking a sample.

Submit material to be tested with a *Sample Identification Card*. For the card, go to the METS website.

Restore work immediately after sampling.

6-3.05H Reserved

6-3.05I Authorized Facility Audit Lists

Section 6-3.05I applies where a facility is specified to be on an Authorized Facility Audit List.

An audit authorized by the Caltrans not more than three (3) years before completion of the fabrication process is acceptable if the County determines the audit was for the same type of work to be performed. For procedures to be included on an Authorized Facility Audit List, go to the METS website.

6-3.05J Quality Control Plans

Reserved

6-3.05K Authorized Material Lists

Section 6-3.05K applies where a material is specified to be on an Authorized Material List.

The material must be on an Authorized Material List before it is incorporated into the work.

For procedures to be included on an Authorized Material List, go to the METS website.

6-3.05L Authorized Material Source Lists

Section 6-3.05L applies where a material is specified to be on an Authorized Material Source List.

The material source must be on an Authorized Material Source List before the item from the source is incorporated into the work.

For procedures to be included on an Authorized Material Source List, go to the METS website.

6-3.06 GUARANTEES AND WARRANTIES

6-3.06A Warranty

The Contractor warrants to the County that materials and equipment furnished under the Contract will be of good quality and new. The Contractor further warrants that the Work will conform with the requirements of the Contract Documents and will be free from defects. Work, materials, or equipment not conforming to these requirements, including or equal substitutions not properly approved and authorized, shall be considered defective. If required by the County, the Contractor shall furnish satisfactory evidence as to the kind and quality of materials and equipment. This warranty is not limited by the provisions of Section 6-3.07 herein. Contractor's performance bond surety shall be liable for breaches of all warranties and correction guarantees referenced in this Section or Section 6-3.07.

Where any warranties provided under the Contract Documents overlap, conflict, or are duplicative, Contractor shall be bound by the more stringent requirements.

6-3.06B Procurement and Assignment of Warranties

Any and all warranties or guarantees which the Contractor is required to obtain pursuant to the Contract Documents which are obtained from any person or entity other than the Contractor including, but not limited to, Subcontractors and manufacturers, shall either be obtained by Contractor in the name of the County (or such other name as the County may designate in writing to Contractor) or be legally transferred or assigned to the County (or the County's designee) at the time of Final Completion of the Work. The Contractor shall perform the Work in such a manner so as to preserve any and all such guarantees and warranties. The Contractor shall secure written warranties from Subcontractors, material suppliers, and manufacturers' warranties for labor and materials which extend beyond the one-year correction period in writing. Any warranty upgrades or extensions that are offered by suppliers or manufacturers of any equipment or system in the Project shall be provided to the County as part of Contractor's and Subcontractors' standard warranties. Provided, however, if any such upgrade/extension offers would expire in less than 90 days after final completion of the Work, the Contractor shall provide the County with such offers at 90 days before the expiration date.

6-3.06C Survival of Warranties

The provisions of this Section 6-3.06 shall survive Contractor's completion of the Work or termination of the Contractor's performance of the Work.

6-3.07 CORRECTION GUARANTEE

6-3.07A Before or After Final Completion

The Contractor shall promptly correct Work rejected by the County or failing to conform to the requirements of the Contract Documents, whether discovered before or after Final Completion and regardless of whether or not the Work was fabricated, installed, or performed by the Contractor or any Subcontractor. . All costs of correcting such rejected Work, including additional testing and inspections, the cost of uncovering and replacement, and compensation for the County's services and expenses made necessary thereby, shall be at the Contractor's expense.

6-3.07B After Final Completion

In addition to the Contractor's obligations under Section 6-3.06, if, within one year after the date of Final Completion of the Work or designated portion thereof, or after the date for commencement of warranties, or by terms of an applicable special warranty required by the Contract Documents, any of the Work is found to be not in accordance with the requirements of the Contract Documents, the Contractor shall correct it promptly after receipt of written notice from the County to do so. If the Contractor fails to correct nonconforming Work within a reasonable time during that period after receipt of notice from the County, the County may correct it in accordance with Section 5-1.04.

The one-year correction period shall be extended with respect to portions of Work first performed after Final Completion by the period of time between Final Completion and the actual completion of that portion of the Work.

During the one year correction guarantee period, the Contractor shall act on all notices received from the County within 48 hours, unless the notice states that an emergency response is required (in which event, the Contractor shall act immediately). The County will not be required to call Subcontractors, suppliers or manufacturers directly.

The Contractor's performance bond surety shall be liable for any breaches of all guarantees, including the correction guarantee established by this section.

In the event of failure of the Contractor to comply with above mentioned conditions within two (2) calendar days (48 hours) or immediately for emergencies after being notified in writing, the County is hereby authorized to proceed to have defects repaired and made good at the expense of the Contractor who hereby agrees to pay all costs and charges, direct and indirect, therefore immediately on demand.

If, in the opinion of the County, defective Work creates a dangerous condition or requires immediate correction or attention to prevent further loss to the County or to prevent interruption of operations of the County, the County will attempt to give the notice required by this Section 6-3.07. If the Contractor cannot be contacted or does not comply with the County's request for correction within a reasonable time as determined by the County, the County may, notwithstanding the provisions of this Section 6-3.07, proceed to make such correction or provide such attention and the costs of such correction or attention shall be charged against the Contractor. Such action by the County will not relieve the Contractor of the guarantees provided in this Section 6-3.07 or elsewhere in this Contract.

This Section 6-3.07 does not in any way limit the guarantee on any items for which a longer guarantee is specified or on any items for which a manufacturer gives a guarantee for a longer period. The Contractor shall furnish the County all appropriate guarantee or warranty certificates, as required, upon completion of this project.

6-3.07C Removal of Non-Conforming Work

The Contractor shall remove from the site portions of the Work that are not in accordance with the requirements of the Contract Documents and are neither corrected by the Contractor nor accepted by the County.

6-3.07D Cost of Correction Due to Non-Conforming Work

If the Contractor's correction or removal of Work that is not in accordance with the requirements of the Contract Documents damages or removes any other property, including but not limited to completed or partially completed construction of the County or any contractor, the Contractor shall bear the cost of correcting any and all such damaged or removed property.

6-3.07E No Impact on Statutes of Limitation

Nothing contained in this Section 6-3.07 shall be construed to establish a period of limitation with respect to other obligations the Contractor has under the Contract Documents. Establishment of the one-year period for correction of Work as described in this Section 6-3.07 relates only to the specific obligation of the Contractor to correct the Work, and has no relationship to the time within which the obligation to comply with the Contract Documents may be sought to be enforced, nor to the time within which proceedings may be commenced to establish the Contractor's liability with respect to the Contractor's obligations. Nothing contained in this Section 6-3.07 shall be construed as establishing any limitation period with respect to the County's enforcement of any Contractor obligations under the Contract Documents that is shorter than the longest limitation period allowed under applicable law.

6-3.07F Acceptance of Non-Conforming Work

If the County prefers to accept Work that is not in accordance with the requirements of the Contract Documents, the County may do so instead of requiring its removal and correction, in which case the Contract Price will be reduced by an amount equal to the entire cost of replacing the Work to make it as originally specified and intended. Such adjustment shall be effected whether or not Final Payment has been made.

7 LEGAL RELATIONS AND RESPONSIBILITY TO THE PUBLIC

7-1.01 GENERAL

Section 7 includes specifications regarding your:

1. Compliance with laws
2. Responsibilities for public safety and convenience
3. Responsibilities for indemnification, insurance, and liability

7-1.02 LAWS

7-1.02A General

Comply with laws, regulations, orders, and decrees applicable to the project. Indemnify and defend the County and State against any claim or liability arising from the violation of a law, regulation, order, or decree by you or your employees. Immediately report to the Engineer a discrepancy or inconsistency between the Contract and a law, regulation, order, or decree.

If the County incurs any fines or penalties because of your failure to comply with a law, regulation, order, or decree, the County deducts the amount of the fine or penalty.

Immediately notify the Engineer if a regulatory agency requests access to the job site or to records. Submit a list of documents provided to the agency and issued enforcement actions.

Only those sections or provisions of Chapter 1 of Part 2 of Division 2 of the Public Contract Code § 10100 et seq. which are specifically incorporated into the contract documents apply to this Contract. All other sections and provisions of Chapter 1 of Part 2 of Division 2 of the Public Contract Code do not apply.

7-1.02B U.S. Fair Labor Standards Act

Comply with 29 USC § 201 et seq.

7-1.02C Reserved

7-1.02D Clean Air Act and Federal Water Pollution Control Act

The Contractor shall comply with all applicable standards, orders, or regulations issued pursuant to the Clean Air Act of 1970 (42 USC 7401 *et seq.*) as amended, the Clean Water Act (33 USC 1251 *et seq,*) as amended, Executive Order 11738, and Environmental Protection Agency regulations (40 CFR Part 15). Violations will be reported to the appropriate authorities.

7-1.02E–7-1.02H Reserved

7-1.02I Government Code

7-1.02I(1) General

Reserved

7-1.02I(2) Nondiscrimination

Pursuant to Labor Code Section 1735, no discrimination shall be made in the employment of persons upon public works because of the race, religious creed, color, national origin, ancestry, physical disability, mental disability, medical condition, marital status, or sex of such persons, except as provided in Section 12940 of the Government Code, and every Contractor for public works violating Labor Code Section 1735 is subject to all the penalties imposed for a violation of Division 2, Part 7, Chapter 1 of the Labor Code.

During the performance of this Contract, the Contractor and its Subcontractors shall not unlawfully discriminate against any employee or applicant for employment because of race, religion, color, national origin, ancestry, physical disability, mental disability, medical condition, marital status, age (over 40) or sex. Contractors and Subcontractors shall ensure that the evaluation and treatment of their employees and applicants for employment are free of such discrimination. Contractors and Subcontractors shall comply with the provisions of the California

Fair Employment and Housing Act (CGC 12900 et seq.) and the applicable regulations promulgated thereunder (California Code of Regulations, Title 2, Section 7285.0 et seq.). The applicable regulations of the Fair Employment and Housing Commission implementing Government Code Section 12990, set forth in Title 2, Division 4, Chapter 5 of the California Code of Regulations are incorporated into this Contract by reference and made a part hereof as if set forth in full. The Contractor and its Subcontractors shall give written notice of their obligations under this clause to labor organizations with which they have a collective bargaining or other agreement.

This Contractor shall include the nondiscrimination and compliance provisions of this Section 7-1.02K(1)(m) in all subcontracts to perform Work under the Contract.

These provisions are applicable to all Contractors and Subcontractors having a Contract or Subcontract of $5,000 or more:

1. As used herein:

    a. "Administrator" means Administrator, Office of Compliance Programs, California Department of Fair Employment and Housing, or any person to whom the Administrator delegates authority;

    b. Minority" includes:

        i. Black (all persons having primary origins in any of the black racial groups of Africa, but not of Hispanic origin);

        ii. Hispanic (all persons of primary culture or origin in Mexico, Puerto Pico, Cuba, Central or South America or other Spanish derived culture or origin regardless of race);

        iii. Asian/Pacific Islander (all persons having primary origins in any of the original peoples of the Far East, Southeast Asia, the Indian Subcontinent or the Pacific Islands); and

        iv. American Indian/Alaskan Native (all persons having primary origins in any of the original peoples of North America and who maintain culture identification through tribal affiliation or community recognition).

2. Whenever the Contractor or any Subcontractor subcontracts a portion of the Work, it shall physically include in each subcontract of $5,000 or more, the nondiscrimination clause in this Contract directly or through incorporation by reference.

3. The Contractor shall implement the specific nondiscrimination standards provided in paragraph 6(a) through (e) of this Section 7-1.02K(1)(m).

4. Neither the provisions of any collective bargaining agreement, nor the failure by a union with whom the Contractor has a collective bargaining agreement, to refer either minorities or women, shall excuse the Contractor's obligations under this Section 7-1.02K(1)(m), Government Code Section 12990, or the regulations promulgated pursuant thereto.

5. In order for the nonworking training hours of apprentices and trainees to be counted, such apprentices and trainees must be employed by the Contractor during the training period, and the Contractor must have made a commitment to employ the apprentices and trainees at the completion of their training, subject to the availability of employment opportunities. Trainees must be trained pursuant to training programs approved by the U.S. Department of Labor or the California Department of Industrial Relations.

6. The Contractor shall take specific actions to implement its nondiscrimination program. The evaluation of the Contractor's compliance with this Section 7-1.02K(1)(m) shall be based upon its effort to achieve maximum results from its actions. The Contractor must be able to demonstrate fully its efforts under steps (a) through (e) below.

    a. Ensure and maintain a working environment free of harassment, intimidation, and coercion at all sites, and at all facilities at which the Contractor's employees are

assigned to work. The Contractor shall specifically ensure that all foremen, superintendents, and other on-site supervisory personnel are aware of and carry out the Contractor's obligations to maintain such a working environment, with specific attention to minority or female individuals working at such sites or in such facilities.

b. Provide written notification within seven days to the director of DFEH when the union or unions with which the Contractor has a collective bargaining agreement has not referred to the Contractor a minority person or woman sent by the Contractor, or when the Contractor has other information that the union referral process has impeded the Contractor's efforts to meet its obligations.

c. Disseminate the Contractor's equal employment opportunity policy by providing notice of the policy to unions and training, recruitment and outreach programs and requesting their cooperation in assisting the Contractor to meet its obligations; and by posting the company policy on bulletin boards accessible to all employees at each location where construction work is performed.

d. Ensure all personnel making management and employment decisions regarding hiring, assignment, layoff, termination, conditions of work, training, rates of pay or other employment decisions, including all supervisory personnel, superintendents, general foremen, on-site foremen, etc., are aware of the Contractor's Equal Employment Opportunity Policy and obligations, and discharge their responsibilities accordingly.

e. Ensure that seniority practices, job classifications, work assignments and other personnel practices, do not have a discriminatory effect by continually monitoring all personnel and employment related activities, to ensure that the equal employment related activities, the employment opportunity policy, and the Contractor's obligations under these Specifications are being carried out.

7. Contractors are encouraged to participate in voluntary associations that assist in fulfilling their equal employment opportunity obligations. The efforts of a Contractor association, joint contractor-union, contractor-community, or other similar group of which the Contractor is a member and participant, may be asserted as fulfilling any one or more of its obligations under this Section 7-1.02K(1)(m) provided that the Contractor actively participates in the group, makes every effort to assure that the group has a positive impact on the employment of minorities and women in the industry, ensures that the concrete benefits of the program are reflected in the Contractor's minority and female workforce participation, and can provide access to documentation which demonstrates the effectiveness of actions taken on behalf of the Contractor. The obligation to comply, however, is the Contractor’s.

8. The Contractor is required to provide equal employment opportunities for all minority groups, both male and female, and all women, both minority and non-minority. Consequently, the Contractor may be in violation of the Fair Employment and Housing Act (CGC Section 12900 et seq.) if a particular group is employed in a substantially disparate manner.

9. Establishment and implementation of a bona fide Affirmative Action Plan pursuant to Title 2 California Code of Regulations Section 8104(b) shall create a rebuttal presumption that a Contractor is in compliance with the requirements of Government Code Section 12990 and its implementing regulations.

10. The Contractor shall not use the nondiscrimination standards to discriminate against any person because of race, color, religion, sex, national origin, ancestry, physical disability, mental disability, medical condition, marital status, or age over 40.

11. The Contractor shall not enter into any subcontract with any person or firm decertified from state Contracts pursuant to Government Code Section 12990.

12. The Contractor shall carry out such sanctions and penalties for violation of this Section 7-1.02K(1)(m) and the nondiscrimination clause, including suspension, termination and

cancellation of existing subcontracts as may be imposed or ordered pursuant to Government Code Section 12990, and its implementing regulations by the awarding agency. Any Contractor who fails to carry out such sanctions and penalties shall be in violation of this Section 7-1.02K(1)(m) and Government Code Section 12900.

13. The Contractor shall designate a responsible official to monitor all employment related activity to ensure that the company's equal employment opportunity policy is being carried out, to submit reports relating to the Provisions hereof as may be required by OCP and to keep records. Records shall at least include for each employee the name, address, telephone numbers, construction trade, union affiliation, if any, employee identification number when assigned, social security number, race, sex, status, (e.g., mechanic, apprentice trainee, helper, or laborer), dates of changes in status, hours worked per week in the indicated trade, rate of pay, and locations at which the work was performed. Records shall be maintained in any easily understandable and retrievable form; however, to the degree that existing records satisfy this requirement, the Contractor shall not be required to maintain separate records.

7-1.02J Reserved

7-1.02K Labor Code

7-1.02K(1) General

Work on the job site must comply with Labor Code §§ 1727 and 1770–1815 and 8 CA Code of Regs § 16000 et seq. Work includes roadside production and processing of materials.

Payroll records include time cards, cancelled checks, cash receipts, trust fund forms, books, documents, schedules, forms, reports, receipts or other information which reflect job assignments, work schedules by days and hours, and the disbursement of payment to workers (8 CA Code of Regs § 16000).

7-1.02K(2) Wages

The County obtains the general prevailing rate of wages applicable to the work to be done. The rate includes:

1. Basic hourly rate
2. Employer payments for health and welfare, pension, vacation, apprenticeship training fees, travel time, and subsistence pay as provided for in Labor Code § 1773.1
3. Similar purposes

The general prevailing wage rates and any applicable changes to these wage rates are available:

1. At the Office of the Clerk of the Board of Supervisors of the County of San Luis Obispo
2. From the Department of Industrial Relations' website

Post the general prevailing wage rates at a prominent place at the job site (Labor Code § 1773.2).

The wage determinations refer to expiration dates. The determinations with a single asterisk after the expiration date, and in effect on the date of advertisement for bids, are good for the life of the Contract. The determinations with double asterisks after the expiration date indicate the wage rate to be paid for work performed after this date has been determined. If work is to extend past this date, pay the new rate and incorporate it into the Contract. Changes in general prevailing wage determinations apply to the Contract when the Director of Industrial Relations has issued them at least 10 days before advertisement. (Labor Code § 1773.6 and 8 CA Code of Regs 16204)

The County does not recognize any claim for additional payment because of a payment by the Contractor of any wage rate in excess of the prevailing wage rate specified in the Contract.

The Contractor and any subcontractor must forfeit to the County not more than $200 per day or part of a day for each worker paid less than the prevailing wage rate and pay the worker the difference between the prevailing wage rate and the rate paid (Labor Code § 1775). The Labor Commissioner determines the amount of this penalty and bases the amount on:

1. Whether the failure to pay the correct prevailing wage rate was a good-faith mistake that the Contractor or subcontractor promptly and voluntarily corrected upon notice
2. The prior record of the Contractor or subcontractor in meeting its prevailing wage obligations
3. The Contractor or subcontractor's willful failure to pay the correct rate of prevailing wages

If a worker employed by a subcontractor on a public works project is not paid the general prevailing per diem wages by the subcontractor, the Contractor is not liable for the penalties described in Section 7-1.02K(2) unless the Contractor had knowledge of the failure to pay the correct general prevailing per diem wages or unless the Contractor fails to comply with the following requirements (Labor Code § 1775):

1. The contract executed between the Contractor and the subcontractor for the performance of work on the public works project must include a copy of the requirements in Labor Code §§ 1771, 1775, 1776, 1777.5, 1813 and 1815.
2. The Contractor must monitor the payment of the specified general prevailing rate of per diem wages by periodic review of the certified payroll records of the subcontractor.
3. Upon becoming aware of the subcontractor's failure to pay the specified prevailing rate of wages to the subcontractor's workers, the Contractor must diligently take corrective action to stop or rectify the failure, including withholding sufficient funds due the subcontractor for work performed on the public works project.
4. Before making final payment to the subcontractor for work performed on the public works project, the Contractor must obtain an affidavit signed under penalty of perjury from the subcontractor that the subcontractor has paid the specified general prevailing rate of per diem wages to its employees on the public works project and any amounts due under Labor Code § 1813.

Under Labor Code § 1775, the County must notify the contractor on a public works project within 15 days of receipt by the County of a complaint of the failure of a subcontractor on that public works project to pay workers the general prevailing rate of per diem wages.

7-1.02K(3) Certified Payroll Records (Labor Code § 1776)

Keep accurate payroll records.

Submit a copy of your certified payroll records, weekly, including those of subcontractors. Include:

1. Each employee's:
    - 1.1. Full name
    - 1.2. Address
    - 1.3. Social security number
    - 1.4. Work classification
    - 1.5. Straight time and overtime hours worked each day and week
    - 1.6. Actual wages paid for each day to each:
        - 1.6.1. Journeyman
        - 1.6.2. Apprentice
        - 1.6.3. Worker
        - 1.6.4. Other employee you employ for the work
    - 1.7. Pay rate
    - 1.8. Itemized deductions made
    - 1.9. Check number issued
2. Apprentices and the apprentice-to-journeyman ratio

Each certified payroll record must include a *Statement of Compliance* signed under penalty of perjury that declares:

1. The information contained in the payroll record is true, correct, and complete
2. The employer has complied with the requirements of sections 1771, 1811, and 1815 for any work performed by his or her employees on the public works project
3. The wage rates paid are at least those required by the Contract

The County allows the use of a form with identical wording as the *Statement of Compliance* form provided by the County.

Make certified payroll records available for inspection at all reasonable hours at your main office on the following basis:

1. Upon the employee's request or upon request of the employee's authorized representative, make available for inspection a certified copy of the employee's payroll record.
2. Refer the public's requests for certified payroll records to the County. Upon the public's request, the County makes available for inspection or furnishes copies of your certified payroll records. Do not give the public access to the records at your main office.

Make all payroll records available for inspection and copying or furnish a copy upon request of a representative of the:

1. County
2. Division of Labor Standards Enforcement of the Department of Industrial Relations
3. Division of Apprenticeship Standards of the Department of Industrial Relations

Furnish the County the location of the records. Include the street address, city, and county. Furnish the County a notification of a location and address change within 5 business days of the change.

Comply with a request for the records within 10 days after you receive a written request. If you do not comply within this period, the County withholds from progress payments a $100 penalty for each day or part of a day for each worker until you comply. You are not assessed this penalty for a subcontractor's failure to comply with Labor Code § 1776.

The County withholds from progress payments for delinquent or inadequate records (Labor Code § 1771.5). If you have not submitted an adequate record by the month's 15th day for the period ending on or before the 1st of that month, the County withholds up to 10 percent of the monthly progress estimate, exclusive of mobilization. The County does not withhold more than $10,000 or less than $1,000.

7-1.02K(4) Apprentices

Comply with the apprentice to journeyman ratio requirements (Labor Code § 1777.5(g)).

Comply with the training contribution requirements (Labor Code § 1777.5(m)(1)).

For answers to questions, contact the Division of Apprenticeship Standards before starting work.

The County deducts from progress payments civil penalties assessed by the Chief of the Division of Apprenticeship Standards for violating Labor Code § 1777.5 (Labor Code § 1777.7).

7-1.02K(5) Working Hours

Eight hours is a legal day's work (Labor Code § 1810).

The time of service of any worker employed on public work is limited and restricted to 8 hours in 1 day and 40 hours in 1 calendar week, except as provided by Labor Code § 1815 (Labor Code § 1811).

A Contractor's employee may work more than 8 hours per day and 40 hours per week if the Contractor pays the employee 1-1/2 times the basic pay rate for the hours worked in excess of 8 hours per day and 40 hours per week (Labor Code § 1815).

For each worker employed in the work for each day the worker works more than 8 hours in 1 day and 40 hours in 1 calendar week without overtime pay, the County deducts $25 as a penalty for violating Labor Code § 1815 (Labor Code § 1813).

7-1.02K(6) Occupational Safety and Health Standards

7-1.02K(6)(a) General

Comply with applicable occupational safety and health standards, rules, regulations, and orders. The Occupational Safety and Health Standards Board is the only agency authorized in the State to adopt and enforce occupational safety and health standards (Labor Code § 142 et seq.).

You are the controlling employer and must ensure hazardous conditions are corrected (Labor Code § 6400).

The Engineer may notify Cal/OSHA if you fail to establish or maintain a safe and healthful workplace.

Submit copies of your Injury and Illness Prevention Program and permits required by Cal/OSHA.

7-1.02K(6)(b) Excavation Safety

Comply with Labor Code § 6705 while excavating. For an excavation 5 feet or more in depth, submit shop drawings for a protective system. The Engineer is authorized to receive and accept the plans required under Labor Code Section 6705, and to take any other actions regarding said plans that are expressly or implicitly authorized under said statute.

The drawings must show the design and details for providing worker protection from caving ground during excavation. The submittal must allow review time and include the contents shown in the following table except the review time is 65 days for an excavation on or affecting railroad property:

Drawing Review Time and Contents

	Plan not requiring a signature	Plan requiring a signature
Review time	5 business days before excavating	20 days before excavating
Contents	Drawings Calculations Material information Proprietary system information	Drawings Calculations Material information Proprietary system information Soil classification Soil properties Soil design calculations

7-1.02K(6)(c) Tunnel Safety

Cal/OSHA classifies tunnels into one of the following classifications:

1. Nongassy
2. Potentially gassy
3. Gassy
4. Extrahazardous

If a tunnel location is described in the Contract, the classification is included in the *Information Handout* and you must:

1. Designate an on-site Safety Representative under 8 CA Code of Regs § 8406
2. Submit the name of your on-site Safety Representative at least 7 days before starting work at each tunnel
3. Prominently post a notice at the job site of:
   3.1. Tunnel classifications
   3.2. Any special orders, rules, special conditions, or regulations related to tunnel work
4. Ensure your workers are informed of these classifications

Notify the Engineer at least twenty (20) days before a worker enters a tunnel not described in the Contract. The County obtains the classification of the tunnel. The Engineer may suspend the

work because of a change directly resulting from the Contractor's planned activities that causes activities to fall under the Tunnel Safety Orders of 8 CA Code of Regs § 8422.

7-1.02K(6)(d) Confined Space Safety

Comply with 8 CA Code of Regs § 5158 while working in a confined space.

7-1.02K(6)(e)–7-1.02K(6)(i) Reserved

7-1.02K(6)(j) Lead Safety

7-1.02K(6)(j)(i) General

Reserved

7-1.02K(6)(j)(ii) Lead Compliance Plan

Section 7-1.02K(6)(j)(ii) applies if the submittal of a lead compliance plan is specified in the Special Provisions.

Regulations containing specific Cal/OSHA requirements when working with lead include 8 CA Code of Regs § 1532.1.

Submit a plan:

1. That documents your compliance program to prevent or minimize worker exposure to lead
2. Including the items listed in 8 CA Code of Regs § 1532.1(e)(2)(B)
3. Signed and sealed by a CIH

Allow 7 days for the Engineer's review. Obtain authorization for the plan before starting any activity that presents the potential for lead exposure.

Before starting any activity that presents the potential for lead exposure to employees who have no prior training, including County employees, provide a safety training program to these employees that complies with 8 CA Code of Regs § 1532.1 and your lead compliance plan.

Submit copies of air monitoring or job site inspection reports made by or under the direction of the CIH under 8 CA Code of Regs § 1532.1 within ten (10) days after the date of monitoring or inspection.

Supply personal protective equipment, training, and washing facilities required by your lead compliance plan for 5 County employees.

7-1.02K(6)(j)(iii–viii) Reserved

7-1.02K(6)(k)–7-1.02K(6)(t) Reserved

7-1.02K(7) California Department of Industrial Relations – Public Works Contractor Registration

1. Beginning July 1, 2014, under the Public Works Contractor Registration Law (California Senate Bill No. 854 - See Labor Code Section 1725.5), contractors must register and meet requirements using the online application before bidding on public works contracts in California. The application also provides agencies that administer public works programs with a searchable database of qualified contractors. Application and renewal are completed online at https://efiling.dir.ca.gov/PWCR/ActionServlet?action=displayPWCRegistrationForm with a non-refundable fee of $300. More information is available at the following websites:

   http://www.dir.ca.gov/DLSE/PublicWorks/SB854FactSheet_6.30.14.pdf

   http://www.dir.ca.gov/Public-Works/PublicWorks.html

2. Beginning April 1, 2015, the County must award public works projects only to Contractors and Subcontractors who comply with the Public Works Contractor Registration Law.

3. Notice to Bidders and Subcontractors:

   a. A Contractor or Subcontractor shall not be qualified to bid on, be listed in the Designation of Subcontractors form (subject to the requirements of Section 4104 of the Public Contract Code), or engage in the performance of this public works project, unless currently registered with the Department of Industrial Relations and qualified to perform work pursuant to Labor Code section 1725.5. It is not a violation of this section for an unregistered contractor to submit a bid that is authorized by Section 7029.1 of the Business and Professions Code or by Section 10164 or 20103.5 of the Public Contract Code, provided the contractor is registered to perform public work pursuant to Section 1725.5 at the time the contract is awarded

   b. No contractor or subcontractor may be awarded a contract for public work on a public works project (awarded on or after April 1, 2015) unless registered with the Department of Industrial Relations pursuant to Labor Code section 1725.5.

   c. This Project is subject to compliance monitoring and enforcement by the Department of Industrial Relations.

   d. The prime contractor must post job site notices prescribed by regulation. (See 8 Calif. Code Reg. Section 16451(d) for the notice that previously was required for projects monitored by the DIR Compliance Monitoring Unit.)

4. Furnishing of Electronic Certified Payroll Records to Labor Commissioner. For all new projects awarded on or after April 1, 2015, contractors and subcontractors must furnish electronic certified payroll records directly to the Labor Commissioner (aka Division of Labor Standards Enforcement).

7-1.02L Public Contract Code

7-1.02L(1) General

Reserved

7-1.02L(2) Antitrust Claims

In entering into a public works contract or a subcontract to supply goods, services, or materials pursuant to a public works contract, the contractor or subcontractor offers and agrees to assign to the awarding body all rights, title, and interest in and to all causes of action it may have under section 4 of the Clayton Act (15 U.S.C. Sec. 15) or under the Cartwright Act (Chapter 2 (commencing with § 16700) of Part 2 of Division 7 of the Business and Professions Code), arising from purchases of goods, services, or materials pursuant to the public works contract or the subcontract. This assignment shall be made and become effective at the time the awarding body tenders final payment to the contractor, without further acknowledgment by the parties. [Public Contract Code § 7103.5 (b)]

7-1.02L(3) Iran Contracting Act of 2010

Pursuant to the Iran Contracting Act of 2010 (Public Contract Code §§ 2200-2208, “the Act”), bidders are ineligible to bid on, submit a proposal for, enter into, or renew any contract with the County for goods or services of one million dollars ($1,000,000) or more if the bidder engages in investment activities in Iran, as defined in the Act. The Act requires that the California Department of General Services (DGS) establish and periodically update a list of ineligible vendors.

Also, pursuant to the Act, financial institutions are ineligible to bid on, submit a proposal for, enter into, or renew any contract with the County for goods or services of one million dollars ($1,000,000) or more if the financial institution extends credit, as defined in the Act, to a business identified on the DGS list of ineligible vendors that will use the credit to provide goods or services in the energy sector in Iran.

Prior to submitting a bid or proposal and prior to executing any County contract or renewal for goods or services of one million dollars ($1,000,000) or more, a bidder must certify that it is not on the list of ineligible bidders prohibited from doing business with the County. During the bid

evaluation, the County shall check the list of ineligible vendors to confirm that the bidder is not on that list (http://www.documents.dgs.ca.gov/PD/poliproc/Iran%20Contracting%20Act%20List.pdf).

Financial institutions must also certify that they are not extending credit to an ineligible vendor as described in the Act. This certification requirement applies regardless of the procurement approach, method, or solicitation format used, including, but not limited to: Request for Proposals, Invitation for Bids, and non-competitive awards.

The Act provides exceptions to the certification requirement (see Public Contract Code §§ 2203(c) and (d)).

Any questions regarding the Iran Contracting Act of 2010 may be directed to the State of California, Department of General Services, Office of Policies, Procedures, and Legislation (OPPL) at PPO@dgs.ca.gov. For more information, the website for the OPPL is located at www.dgs.ca.gov/pd/Resources/PDLegislation.aspx.

7-1.02M Public Resources Code

7-1.02M(1) General

Reserved

7-1.02M(2) Reserved

7-1.02M(3) Surface Mining and Reclamation Act

Imported borrow or aggregate material must come from a surface mine permitted under the Surface Mining and Reclamation Act of 1975, Pub Res Code § 2710 et seq., or from a source not subject to this act.

For the list of permitted sites, go to the Department of Conservation, Office of Mine Reclamation website.

If you import borrow or aggregate material from a surface mine not on this list, submit proof that the source is not subject to this act.

7-1.02M(4)–7-1.02M(7) Reserved

7-1.02N Reserved

7-1.02O Vehicle Code

Under Vehicle Code § 591, the County determines areas within the project limits are open to public traffic. For those areas, comply with the requirements set forth in Divisions 11, 12, 13, 14 and 15 of the Vehicle Code.

Vehicle Code § 591 does not relieve you or any other person from the duty of exercising due care.

7-1.02P–7-1.02Q Reserved

7-1.02R Environmental Stewardship

Comply with Section 14.

7-1.02S–7-1.02Z Reserved

7-1.03 PUBLIC CONVENIENCE

Compliance with Section 7-1.03 does not relieve you of your responsibility for public safety.

Construction activities must not inconvenience the public or abutting property owners. Schedule and conduct work to avoid unnecessary inconvenience to the public and abutting property owners. Avoid undue delay in construction activities to reduce the public's exposure to construction.

Where possible, route traffic on new or existing paved surfaces.

Maintain convenient access to driveways, houses, and buildings. When an abutting property owner's access across the right-of-way line is to be eliminated or replaced under the Contract, the existing access must not be closed until the replacement access facility is usable. Construct temporary approaches to a crossing and an intersecting highway.

Provide a reasonably smooth and even surface for use by traffic at all time during the excavation of a roadway and construction of an embankment. Before other grading activities, place fill at culverts and bridges to allow traffic to cross. If ordered, excavate a roadway cut in layers and construct an embankment in partial widths at a time alternating construction from one side to the other and routing traffic over the side opposite the one under construction. Install or construct culverts on only 1/2 the width of the traveled way at a time; keep the traveled way portion being used by traffic open and unobstructed until the opposite side of the traveled way is ready for use by traffic.

Upon completion of rough grading or placing any subsequent layer, bring the surface of the roadbed to a smooth and even condition, free of humps and depressions, and satisfactory for the use of the public.

After subgrade preparation for a specified layer of material has been completed, repair any damage to the roadbed or completed subgrade, including damage caused by public use.

While subgrade and paving activities are underway, allow the public to use the shoulders. If half-width paving methods are used, allow the public to use the side of the roadbed opposite the one under construction. If enough width is available, keep open a passageway wide enough to accommodate at least 2 lanes of traffic at locations where subgrade and paving activities are underway. Shape shoulders or reshape subgrade as necessary to accommodate traffic during subgrade preparation and paving activities.

Apply dust palliative for the prevention or alleviation of dust nuisance.

Install signs, lights, flares, Type K temporary railing, barricades and other facilities to direct traffic. Provide flaggers whenever necessary to direct the movement of the public through or around the work.

You are required to pay for the cost of replacing or repairing all facilities installed under Change Order Work for the convenience, direction, or warning of the public that are lost while in your custody or are damaged by your operations to such an extent as to require replacement or repair.

The Engineer may order or consent to your request to open a completed section of surfacing, pavement, or structure roadway surface for public use. You will not be compensated for any delay to your construction activities caused by the public. This does not relieve you from any other contractual responsibility.

7-1.04 PUBLIC SAFETY

You are responsible to provide for public safety.

Do not construct a temporary facility that interferes with the safe passage of traffic.

Control dust resulting from the work, inside and outside the right-of-way.

Move workers, equipment, and materials without endangering traffic.

Whenever your operations create a condition hazardous to the public, furnish, erect and maintain those fences, temporary railing, barricades, lights, signs, and other devices and take any other necessary protective measures to prevent damage or injury to the public.

Any fences, temporary railing, barricades, lights, signs, or other devices furnished, erected and maintained by you are in addition to those for which payment is provided elsewhere in the specifications.

Provide flaggers whenever necessary to ensure that the public is given safe guidance through the work zone. At locations where traffic is being routed through construction under one-way controls, move your equipment in compliance with the one-way controls unless otherwise ordered.

Use of signs, lights, flags, or other protective devices must comply with the *California MUTCD* and any directions of the Engineer. Signs, lights, flags or other protective devices must not obscure the visibility of, nor conflict in intent, meaning, and function of either existing signs, lights and traffic control devices, or any construction area signs.

Keep existing traffic signals and highway lighting in operation. Other forces within the County will perform routine maintenance of these facilities during the work.

Cover signs that direct traffic to a closed area. Except for work specified in Section 12, maintaining, and removing the covers on construction area signs is Change Order Work.

Install temporary illumination in a manner which the illumination and the illumination equipment does not interfere with public safety. The installation of general roadway illumination does not relieve you from furnishing and maintaining any protective devices.

Equipment must enter and leave the highway via existing ramps and crossovers and must move in the direction of traffic. All movements of workmen and construction equipment on or across lanes open to traffic must be performed in a manner that do not endanger the public. Your vehicles or other mobile equipment leaving an open traffic lane to enter the construction area must slow down gradually in advance of the location of the turnoff to give the traffic following an opportunity to slow down. When leaving a work area and entering a roadway carrying traffic, your vehicles and equipment must yield to traffic.

Immediately remove hauling spillage from a roadway lane or shoulder open to traffic. When hauling on roadways, trim loads and remove material from shelf areas to minimize spillage.

Notify the Engineer not less than 25 days and not more than 125 days before the anticipated start of an activity that will change the vertical or horizontal clearance available to traffic, including shoulders.

If vertical clearance is temporarily reduced to 15.5 feet or less, place low clearance warning signs in compliance with the *California MUTCD* and any directions of the Engineer. Signs must comply with the dimensions, color, and legend requirements of the *California MUTCD* and Section 12-3.06 except that the signs must have black letters and numbers on an orange retroreflective background. W12-2P signs must be illuminated so that the signs are clearly visible.

Pave or provide full width continuous and cleared wood walks for pedestrian openings through falsework. Protect pedestrians from falling objects and concrete-curing water. Extend overhead protection for pedestrians at least 4 feet beyond the edge of the bridge deck. Illuminate all pedestrian openings through falsework. Temporary pedestrian facilities must comply with the *California MUTCD*, Part 6, Chapter 6D, "Pedestrian and Worker Safety."

Do not store vehicles, material, or equipment in a way that:

1. Creates a hazard to the public
2. Obstructs traffic control devices

Do not install or place temporary facilities used to perform the work which interfere with the free and safe passage of traffic.

Temporary facilities that could be a hazard to public safety if improperly designed must comply with design requirements described in the Contract for those facilities or, if none are described, with standard design criteria or codes appropriate for the facility involved. Submit shop drawings and design calculations for the temporary facilities and show the standard design criteria or codes used. Shop drawings and supplemental calculations must be sealed and signed by an engineer who is registered as a civil engineer in the State.

If you appear to be neglectful or negligent in furnishing warning devices and taking protective measures, the Engineer may direct your attention to the existence of a hazard. You must furnish and install the necessary warning devices. If the Engineer points out the inadequacy of warning devices and protective measures, that action on the part of the Engineer does not relieve you from your responsibility for public safety or abrogate your obligation to furnish and pay for these devices and measures.

Install Type K temporary railing or other authorized protective systems under any of the following conditions:

1. Excavations: Where the near edge of the excavation is within 15 feet from the edge of an open traffic lane
2. Temporarily unprotected permanent obstacles: When the work includes the installation of a fixed obstacle together with a protective system, such as a sign structure together with protective railing, and you elect to install the obstacle before installing the protective system; or you, for your convenience and as authorized, remove a portion of an existing protective railing at an obstacle and do not replace such railing completely the same day
3. Storage areas: When material or equipment is stored within 15 feet of the edge of an open traffic lane and the storage is not otherwise prohibited by the Contract
4. Height differentials: When construction operations create a height differential greater than 0.15 feet within 15 feet of the edge of traffic lane

Installation of Type K temporary railing is not required if an excavation within 15 feet from the edge of an open traffic lane is protected by any of the following:

1. Steel plate or concrete covers of adequate thickness to prevent accidental entry by traffic or the public
2. Side slope where the downhill slope is 4:1 (horizontal:vertical) or less unless a naturally occurring condition
3. Barrier or railing

Offset the approach end of Type K temporary railing a minimum of 15 feet from the edge of an open traffic lane. Install the temporary railing on a skew toward the edge of the traffic lane of not more than 1 foot transversely to 10 feet longitudinally with respect to the edge of the traffic lane. If the 15-foot minimum offset cannot be achieved, the temporary railing must be installed on the 10 to 1 skew to obtain the maximum available offset between the approach end of the railing and the edge of the traffic lane, and an array of temporary crash cushion modules must be installed at the approach end of the temporary railing.

Secure Type K temporary railing in place before starting work for which the temporary railing is required.

Where 2 or more lanes in the same direction are adjacent to the area where the work is being performed, including shoulders, the adjacent lane must be closed under any of the following conditions:

1. Work is off the traveled way but within 6 feet of the edge of the traveled way, and the approach speed is greater than 45 miles per hour
2. Work is off the traveled way but within 3 feet of the edge of the traveled way, and the approach speed is less than 45 miles per hour

Closure of the adjacent traffic lane is not required when performing any of the following:

1. Working behind a barrier
2. Paving, grinding, or grooving
3. Installing, maintaining, or removing traffic control devices except Type K temporary railing

Do not reduce an open traffic lane width to less than 10 feet. When traffic cones or delineators are used for temporary edge delineation, the side of the base of the cones or delineators nearest to traffic is considered the edge of the traveled way.

If a traffic lane is closed with channelizers for excavation work, move the devices to the adjacent edge of the traveled way when not excavating. Space the devices as specified for the lane closure.

Do not move or temporarily suspend anything over a traffic lane open to the public unless the public is protected.

7-1.05 INDEMNIFICATION

7-1.05A Indemnification of County

7-1.05A(1) General

To the fullest extent permitted by law, the Contractor assumes liability for and agrees, at the Contractor's sole cost and expense, to promptly and fully indemnify, protect, hold harmless and defend (even if the allegations are false, fraudulent, or groundless), the County, its Board and each member thereof, and their respective officials, officers, directors, employees, commission members, representatives, and agents ("Indemnitees"), from and against any and all claims, allegations, actions, suits, arbitrations, administrative proceedings, regulatory proceedings, or other legal proceeds, causes of action, demands, costs, judgments, liens, stop payment notices, penalties, liabilities, damages, losses, anticipated losses of revenues, and expenses (including, but not limited to, any fees of accountants, attorneys, experts, or other professionals, or investigation expenses), or losses of any kind or nature whatsoever, whether actual, threatened, or alleged, arising out of, resulting from, or in any way (either directly or indirectly), related to the Work, the Project or any breach of the Contract by Contractor or any of its officers, agents, employees, Subcontractors (of any tier), or any person performing any of the Work, pursuant to a direct or indirect contract with the Contractor ("Indemnity Claims"). Such Indemnity Claims include, but are not limited to, claims for:

1. Any activity on or use of the County's premises or facilities;
2. Any liability incurred due to Contractor acting outside the scope of its authority pursuant to the Contract, whether or not caused in part by an Indemnified Party;
3. The failure of Contractor or the Work to comply with any applicable law, permit, or orders;
4. Any misrepresentation, misstatement or omission with respect to any statement made in the Contract Documents or any document furnished by the Contractor in connection therewith;
5. Any breach of any duty, obligation or requirement under the Contract Documents, including, but not limited to any breach of Contractor's warranties, representations, or agreements set forth in the Contract Documents;
6. Any failure to coordinate the Work with the County's separate contractors;
7. Any failure to provide notice to any party as required under the Contract Documents;
8. Any failure to act in such a manner as to protect the Project from loss, cost, expense, or liability;
9. Bodily or personal injury, emotional injury, sickness or disease, or death at any time to any persons including without limitation employees of Contractor;
10. Damage or injury to real property or personal property, equipment and materials (including, but without limitation, property under the care and custody of the Contractor or the County) sustained by any person or persons (including, but not limited to, companies, corporations, utility company or property owner, Contractor and its employees or agents, and members of the general public);
11. Any liability imposed by applicable law including, but not limited to criminal or civil fines or penalties;
12. Any dangerous, hazardous, unsafe or defective condition of, in or on the site, of any nature whatsoever, which may exist by reason of any act, omission, neglect, or any use or occupation of the site by Contractor, its officers, agents, employees, or Subcontractors;
13. Any operation conducted upon or any use or occupation of the site by Contractor, its officers, agents, employees, or Subcontractors under or pursuant to the provisions of the Contract or otherwise;
14. Any acts, errors, omission or negligence of Contractor, its officers, agents, employees, or Subcontractors;
15. Infringement of any patent rights, licenses, copyrights or intellectual property which may be brought against the Contractor or the County arising out of Contractor's Work, for which the Contractor is responsible; and
16. Any and all claims against the County seeking compensation for labor performed or materials used or furnished to be used in the Work or alleged to have been furnished on the Project, including all incidental or consequential damages resulting to the County from such claims.

7-1.05A(2) Effect of Indemnitees' Active Negligence

Contractor's obligations to indemnify and hold the Indemnitees harmless **exclude** only such portion of any Indemnity Claim which is attributable to the active negligence or willful misconduct of the Indemnitee, provided such active negligence or willful misconduct is determined by agreement of the parties or by findings of a court of competent jurisdiction. In instances where an Indemnitee's active negligence accounts for only a percentage of the liability for the Indemnity Claim involved, the obligation of Contractor will be for that entire percentage of liability for the Indemnity Claim not attributable to the active negligence or willful misconduct of the Indemnitee(s). Such obligation shall not be construed to negate, abridge or otherwise reduce any other right or obligation of indemnity which would otherwise exist as to any party or person described in this Section 7-1.05A. Subject to the limits set forth herein, the Contractor, at its own expense, shall satisfy any resulting judgment that may be rendered against any Indemnitee resulting from an Indemnity Claim. The Indemnitees shall be consulted with regard to any proposed settlement.

7-1.05A(3) Independent Defense Obligation

The duty of the Contractor to indemnify and hold harmless the Indemnitees includes the separate and independent duty to defend the Indemnitees, which duty arises immediately upon receipt by Contractor of the tender of any Indemnity Claim from an Indemnitee. The Contractor's obligation to defend the Indemnitee(s) shall be at Contractor's sole expense, and not be excused because of the Contractor's inability to evaluate liability or because the Contractor evaluates liability and determines that the Contractor is not liable. This duty to defend shall apply whether or not an Indemnity Claim has merit or is meritless, or which involves claims or allegations that any or all of the Indemnitees were actively, passively, or concurrently negligent, or which otherwise asserts that the Indemnitees are responsible, in whole or in part, for any Indemnity Claim. The Contractor shall respond within thirty (30) calendar days to the tender of any Indemnity Claim for defense and/or indemnity by an Indemnitee, unless the Indemnitee agrees in writing to an extension of this time. The defense provided to the Indemnitees by Contractor shall be by well qualified, adequately insured and experienced legal counsel acceptable to the County.

7-1.05A(4) Intent of Parties Regarding Scope of Indemnity

It is the intent of the parties that the Contractor and its Subcontractors of all tiers shall provide the Indemnitees with the broadest defense and indemnity permitted by applicable law. In the event that any of the defense, indemnity or hold harmless provisions in the Contract Documents are found to be ambiguous, or in conflict with one another, it is the parties' intent that the broadest and most expansive interpretation in favor of providing defense and/or indemnity to the Indemnitees be given effect.

7-1.05A(5) Waiver of Indemnity Right Against Indemnitees

With respect to third party claims against the Contractor, to the fullest extent permitted by law, the Contractor waives any and all rights to any type of express or implied indemnity against the Indemnitees.

7-1.05A(6) Subcontractor Requirements

In addition to the requirements set forth hereinabove, Contractor shall ensure, by written subcontract agreement, that each of Contractor's Subcontractors of every tier shall protect, defend, indemnify and hold harmless the Indemnitees with respect to Indemnity Claims arising out of, in connection with, or in any way related to each such Subcontractors' Work on the Project in the same manner in which Contractor is required to protect, defend, indemnify and hold the Indemnitees harmless. In the event Contractor fails to obtain such defense and indemnity obligations from others as required herein, Contractor agrees to be fully responsible to the Indemnitees according to the terms of this Section 7-1.05A.

7-1.05A(7) No Limitation or Waiver of Rights

Contractor's obligations under this Section 7-1.05A are in addition to any other rights or remedies which the Indemnitees may have under the law or under the Contract Documents. Contractor's

indemnification and defense obligations set forth in this Section 7-1.05A are separate and independent from the insurance provisions set forth in the Contract Documents, and do not limit, in any way, the applicability, scope, or obligations set forth in such insurance provisions. The purchase of insurance by the Contractor with respect to the obligations required herein shall in no event be construed as fulfillment or discharge of such obligations. In any and all claims against the Indemnitees by any employee of the Contractor, any Subcontractor, any supplier of the Contractor or Subcontractors, anyone directly or indirectly employed by any of them, or anyone for whose acts any of them may be liable, the obligations under this Section 7-1.05A shall not be limited in any way by any limitation on the amount or type of damages, compensation or benefits payable by or for the Contractor or any Subcontractor or any supplier of either of them, under workers' or workmen's compensation acts, disability benefit acts or other employee benefit acts. Failure of the County to monitor compliance with these requirements imposes no additional obligations on the County and will in no way act as a waiver of any rights hereunder.

7-1.05A(8) Withholding to Secure Obligation

In the event an Indemnity Claim arises prior to final payment to Contractor, the County may, in its sole discretion, reserve, deduct, retain or apply any monies due Contractor for the purpose of resolving such Indemnity Claims; provided, however, the County may release such funds if the Contractor provides the County with reasonable assurances of protection of the Indemnitees' interests. The County shall, in its sole discretion, determine whether such assurances are reasonable.

7-1.05A(9) Survival of Indemnity Obligations

Contractor's obligations under this Section 7-1.05A are binding on Contractor's and its Subcontractors' successors, heirs and assigns and shall survive the completion of the Work or termination of the Contractor's performance of the Work.

7-1.05B Responsibility to Other Entities

You are responsible for any liability imposed by law and for injuries to or death of any person, including workers and the public, or damage to property. Indemnify and save harmless any county, city or district and its officers and employees connected with the work, within the limits of which county, city, or district the work is being performed, all in the same manner and to the same extent specified for the protection of the County.

7-1.06 INSURANCE

7-1.06A General

The Contractor, at its sole cost, shall purchase and maintain the insurance policies set forth below on all of its operations under this Contract. All of the insurance companies providing insurance for the Contractor shall have, and provide evidence of, an A.M. Best & Co. rating of A:VII or above, unless an exception is granted by the County's Risk MAnager. Further, all policies shall be maintained for the full term of this Contract and related warranty period if applicable.

7-1.06B Commercial General Liability

Policy shall include coverage at least as broad as set forth in Insurance Services Office Commercial General Liability Coverage (CG 00 01) with policy limits of not less than $2 million dollars combined single limit per occurrence. Policies shall be endorsed with the following specific language or contain equivalent language in the policy:

1. The County of San Luis Obispo, its officers, officials, employees, and volunteers are named as an additional insured for all liability arising out of the operations by or on behalf of the named insured in the performance of this Agreement. General liability coverage can be provided in the form of an endorsement to the Contractor's insurance as least as broad as ISO Form CG 20 10 11 85 or if not available, through the addition of both CG 20 10 and CG 20 37 (if a later edition is used).

2. The insurance provided herein shall be considered primary coverage to the County of San Luis Obispo with respect to any insurance or self-insured retention maintained by the County.

Further, the County's insurance shall be considered excess insurance only and shall not be called upon to contribute to this insurance.

3. The policy shall not be cancelled or materially changed without first giving thirty (30) days prior written notice to the County of San Luis Obispo, Department of Public Works.

7-1.06C Business Automobile Policy

Policy shall include coverage at least as broad as set forth in the liability section of Insurance Services Office Business Auto Coverage (CA 00 01) with policy limits of no less than $1 million dollars combined single limit for each occurrence. Said insurance shall include coverage for owned, non-owned, and hired vehicles. Policy shall be endorsed with the following specific language or contain equivalent language in the policy:

4. The County of San Luis Obispo, its officers, officials, employees, and volunteers are named as an additional insured for all liability arising out of the operations by or on behalf of the named insured in the performance of this Contract.
5. The policy shall not be cancelled or materially changed without first giving thirty (30) days prior written notice to the County of San Luis Obispo, Department of Public Works.

7-1.06D Workers' Compensation/Employers' Liability Insurance

Workers' Compensation policy shall provide statutory limits as required by State of California. Policy shall be endorsed with the following specific language or contain equivalent language in the policy:

1. The Contractor and its insurer shall waive all rights of subrogation against the County, its officers and employees for workers' compensation losses arising out of this Contract.
2. The policy shall not be cancelled or materially changed without first giving thirty (30) days prior written notice to the County of San Luis Obispo, Department of Public Works.

Employer's Liability policy shall provide $1 million dollars per accident for bodily injury or disease, and for bodily injury by disease.

If the Contractor maintains higher limits than the minimums shown above, the County requires and shall be entitled to coverage for the higher limits maintained by the Contractor.

7-1.06D Deductibles and Self-Insurance Retentions

All deductibles and/or self-insured retentions which apply to the insurance policies required herein will be declared in writing and approved by the County prior to commencement of this Contract.

7-1.06E Documentation

Prior to commencement of work and annually upon expiration of the coverages for the entire period for which coverage is required to be provided, the Contractor shall provide to the County of San Luis Obispo, Department of Public Works, Room 207, County Government Center, CA 93408, Attention Design Engineer, Contract No. 300385, properly executed certificates of insurance and endorsements clearly evidencing the coverage specified in this Section 7-1.06. Each certificate and endorsement is to be signed by a person authorized by that insurer to bind coverage on its behalf. The certificate(s) and endorsement(s) must be in a form approved by the County. All deductibles and self-insured retentions must be identified in the certificates. Further, at the County's request, the Contractor shall provide certified copies of the insurance policies (including, but not limited to, the declarations page, form list, and riders), endorsements or certificates required under the Contract Documents, and premium invoices. within thirty (30) days of request.

Failure of the County to demand such certificates or other evidence of the Contractor's full compliance with these insurance requirements or failure of the County to identify a deficiency in compliance from the evidence provided shall not be construed as a waiver of the Contractor's obligation to maintain such insurance.

7-1.06F Absence of Insurance Coverage

County may direct the Contractor to immediately cease all activities with respect to this Contract if it determines that Contractor fails to carry, in full force and effect, all insurance policies with coverage levels at or above the limits specified in these Contract Documents. Any delays or expense caused due to stopping of work and change of insurance shall be considered the Contractor's delay and expense.

7-1.06G Special Risks or Circumstances

The County reserves the right to modify these requirements, including limits, based on the nature of the risk, prior experience, insurer, coverage, or other special circumstances.

7-1.07 LEGAL ACTIONS AGAINST THE COUNTY

7-1.07A General

If legal action is brought against the County over compliance with a State or federal law, rule, or regulation applicable to highway work, then:

1. If the County in complying with a court order prohibits you from performing work, the resulting delay is a suspension related to your performance, unless the County terminates the Contract.
2. If a court order (other than an order to show cause) or the final judgment in the action prohibits the County from requiring you to perform work, the County may delete the prohibited work or terminate the Contract.

If work is prohibited as a result of the Contractor's failure to comply with the Contract, the County reserves all of its rights and remedies under the Contract and applicable law. Nothing in this section should be construed as authorizing an increase in Contract Price or Contract Time.

7-1.07B Seal Coat Claims

Pay for claims for personal property damage caused by screening and bituminous binder.

Within thirty (30) days of the last screening spreading, do the following:

1. Process and resolve all claims reported or submitted to you by the public as follows:
   1.1. Within three (3) business days of receipt of a claim, submit to the County a copy of the claim, a written analysis of the claim, and a statement indicating whether or not you will pay the claim. If you reject a claim, provide the reasons for rejection in writing.
   1.2. If the claimant becomes dissatisfied with your handling of the claim, immediately refer the claimant to the Engineer for assistance in resolving the claim.
2. Submit to the County evidence of your paid claims.

All third party claims properly presented to the County, under Govt Code § 900 et seq. are processed and resolved by the County as follows:

1. The claims are processed as formal government claims subject to all laws and policies and are resolved as the County determines including referring the claim to you for handling.
2. If the County approves settlement of a claim or is ordered to pay pursuant to a court order, the claim is paid from funds withheld from you.
3. Within three (3) business days of the County's determination that you are responsible for resolving the claim, the County sends a copy of the claim to you for resolution or notifies you of the County's decision to resolve the claim.

If no withheld funds remain or have been returned, the County may pay any claims and seek reimbursement from you through an offset or any other legal means.

7-1.08 PERSONAL LIABILITY

Neither the Director, the Engineer, nor any other officer or authorized employee of the County, nor any officer or employee of State, city or district shall be personally responsible for any liability arising under or by virtue of the Contract.

7-1.09–7-1.10 RESERVED

7-1.11 FEDERAL LAWS FOR FEDERAL-AID CONTRACTS

7-1.11A General

Section 7-1.11 includes specifications required in a federal-aid construction contract and applies to a federal-aid contract.

A copy of form FHWA-1273 is included in Exhibit B to the Agreement. The training and promotion section of section II refers to training provisions as if they were included in the Special Provisions. The County specifies the provisions in Section 7-1.11D of the General Conditions. If a number of trainees or apprentices is required, the County shows the number on the Notice to Bidders. Interpret each FHWA-1273 clause shown in the following table as having the same meaning as the corresponding County clause:

FHWA-1273 Nondiscrimination Clauses

FHWA-1273 section	FHWA-1273 clause	County clause
Training and Promotion	In the event a special provision for training is provided under this contract, this subparagraph will be superseded as indicated in the special provision.	If section 7-1.11D applies, section 7-1.11D supersedes this subparagraph.
Records and Reports	If on-the-job training is being required by special provision, the contractor will be required to collect and report training data.	If the Contract requires on-the-job training, collect and report training data.

7-1.11B RESERVED

7-1.11C Female and Minority Goals

To comply with section II, "Nondiscrimination," of "Required Contract Provisions Federal-Aid Construction Contracts," the County is including in Section 7-1.11C female and minority utilization goals for federal-aid construction contracts and subcontracts that exceed $10,000.

The nationwide goal for female utilization is 6.9 percent.

The goals for minority utilization [45 Fed Reg 65984 (10/3/1980)] are as shown in the following table:

Minority Utilization Goals

	Economic area	Goal (Percent)
174	Redding CA: Non-SMSA Counties: CA Lassen; CA Modoc; CA Plumas; CA Shasta; CA Siskiyou; CA Tehama	6.8
175	Eureka, CA Non-SMSA Counties: CA Del Norte; CA Humboldt; CA Trinity	6.6
176	San Francisco-Oakland-San Jose, CA: SMSA Counties: 7120 Salinas-Seaside-Monterey, CA CA Monterey 7360 San Francisco-Oakland CA Alameda; CA Contra Costa; CA Marin; CA San Francisco; CA San Mateo 7400 San Jose, CA CA Santa Clara, CA 7485 Santa Cruz, CA CA Santa Cruz 7500 Santa Rosa CA Sonoma 8720 Vallejo-Fairfield-Napa, CA CA Napa; CA Solano Non-SMSA Counties: CA Lake; CA Mendocino; CA San Benito	 28.9 25.6 19.6 14.9 9.1 17.1 23.2
177	Sacramento, CA: SMSA Counties: 6920 Sacramento, CA CA Placer; CA Sacramento; CA Yolo Non-SMSA Counties CA Butte; CA Colusa; CA El Dorado; CA Glenn; CA Nevada; CA Sierra; CA Sutter; CA Yuba	 16.1 14.3
178	Stockton-Modesto, CA: SMSA Counties: 5170 Modesto, CA CA Stanislaus 8120 Stockton, CA CA San Joaquin Non-SMSA Counties CA Alpine; CA Amador; CA Calaveras; CA Mariposa; CA Merced; CA Tuolumne	 12.3 24.3 19.8
179	Fresno-Bakersfield, CA SMSA Counties: 0680 Bakersfield, CA CA Kern 2840 Fresno, CA CA Fresno Non-SMSA Counties: CA Kings; CA Madera; CA Tulare	 19.1 26.1 23.6

180	Los Angeles, CA: SMSA Counties: 0360 Anaheim-Santa Ana-Garden Grove, CA CA Orange 4480 Los Angeles-Long Beach, CA CA Los Angeles 6000 Oxnard-Simi Valley-Ventura, CA CA Ventura 6780 Riverside-San Bernardino-Ontario, CA CA Riverside; CA San Bernardino 7480 Santa Barbara-Santa Maria-Lompoc, CA CA Santa Barbara Non-SMSA Counties CA Inyo; CA Mono; CA San Luis Obispo	 11.9 28.3 21.5 19.0 19.7 24.6
181	San Diego, CA: SMSA Counties 7320 San Diego, CA CA San Diego Non-SMSA Counties CA Imperial	 16.9 18.2

For each July during which work is performed under the Contract, you and each non-material-supplier subcontractor with a subcontract of $10,000 or more must complete Form FHWA PR-1391 (Appendix C to 23 CFR 230). Submit the forms by August 15.

7-1.11D Training

Section 7-1.11D applies if a number of trainees or apprentices is shown on the Notice to Bidders.

As part of your equal opportunity affirmative action program, provide on-the-job training to develop full journeymen in the types of trades or job classifications involved.

You have primary responsibility for meeting this training requirement.

If you subcontract a Contract part, determine how many trainees or apprentices are to be trained by the subcontractor.

Where feasible, 25 percent of apprentices or trainees in each occupation must be in their 1st year of apprenticeship or training.

Distribute the number of apprentices or trainees among the work classifications on the basis of your needs and the availability of journeymen in the various classifications within a reasonable recruitment area.

Before starting work, submit:

1. Number of apprentices or trainees to be trained for each classification
2. Training program to be used
3. Training starting date for each classification

Obtain the County's approval for this submitted information before you start work. The County credits you for each apprentice or trainee you employ on the work who is currently enrolled or becomes enrolled in an approved program.

The primary objective of Section 7-1.11D is to train and upgrade minorities and women toward journeymen status. Make every effort to enroll minority and women apprentices or trainees, such as conducting systematic and direct recruitment through public and private sources likely to yield minority and women apprentices or trainees, to the extent they are available within a reasonable recruitment area. Show that you have made the efforts. In making these efforts, do not discriminate against any applicant for training.

Do not employ as an apprentice or trainee an employee:

1. In any classification in which the employee has successfully completed a training course leading to journeyman status or in which the employee has been employed as a journeyman
2. Who is not registered in a program approved by the U.S. Department of Labor, Bureau of Apprenticeship and Training

Ask the employee if the employee has successfully completed a training course leading to journeyman status or has been employed as a journeyman. Your records must show the employee's answers to the questions.

In your training program, establish the minimum length and training type for each classification. The County and FHWA approves a program if one of the following is met:

1. It is calculated to:
   1.1. Meet your equal employment opportunity responsibilities.
   1.2. Qualify the average apprentice or trainee for journeyman status in the classification involved by the end of the training period.
2. It is registered with the U.S. Department of Labor, Bureau of Apprenticeship and Training and it is administered in a way consistent with the equal employment responsibilities of federal-aid highway construction contracts.

Obtain the State's approval for your training program before you start work involving the classification covered by the program.

Provide training in the construction crafts, not in clerk-typist or secretarial-type positions. Training is allowed in lower level management positions such as office engineers, estimators, and timekeepers if the training is oriented toward construction applications. Training is allowed in the laborer classification if significant and meaningful training is provided and approved by the FHWA division office. Off-site training is allowed if the training is an integral part of an approved training program and does not make up a significant part of the overall training.

The County reimburses you 80 cents per hour of training given an employee on this Contract under an approved training program:

1. For on-site training
2. For off-site training if the apprentice or trainee is currently employed under a federal-aid contract and you do at least one of the following:
   2.1. Contribute to the cost of the training
   2.2. Provide the instruction to the apprentice or trainee
   2.3. Pay the apprentice's or trainee's wages during the off-site training period
3. If you comply with Section 7-1.11D

Each apprentice or trainee must:

1. Start training on the project as soon as feasible after the start of work involving the apprentice's or trainee's craft
2. Remain on the project as long as training opportunities exist in the apprentice's or trainee's work classification or until the apprentice or trainee has completed the training program

Furnish the apprentice or trainee:

1. Copy of the program you will comply with in providing the training
2. Certification showing the type and length of training satisfactorily completed

Maintain records and submit reports documenting your performance under Section 7-1.11D.

7-1.12 FEDERAL WAGE DETERMINATION

The Federal wage determination applicable to this Contract is included as an appendix to these Contract Documents.

8 PROSECUTION AND PROGRESS

8-1.01 GENERAL

Section 8 includes specifications related to prosecuting the Contract and work progress.

Weekly meetings will be held at the job site to review the progress of the work and discuss any problems that may have occurred. Provide an updated schedule at the weekly meeting. The meeting must include, at a minimum:

1. The Engineer
2. Inspectors
3. Your foreman

You must complete a daily report indicating locations worked, total manpower per construction trade for each task, major equipment on site, each subcontractor's manpower and equipment, weather conditions, any other related information involved in the performance of the work. The daily report must be completed on forms furnished to you, and submitted at the end of each workday. The report must comment on the daily progress and status of the work within each major component of the work.

8-1.02 SCHEDULE

8-1.02A General

All schedules must be consistent in all respects with the time and order of Contract work requirements. Perform work in the sequence indicated on the current accepted schedule.

You are responsible for assuring that all activity sequences are logical and that each schedule shows a coordinated plan for complete performance of the work.

If the Contract includes construction staging and you propose changes to the described staging, do not perform work affected by the proposed changes until the Engineer accepts your schedule. Changes to the schedule that change described staging is Change Order Work.

The Engineer's review and acceptance of schedules does not void any Contract part and does not void your responsibility for submitting complete and accurate information.

Correct rejected schedules and resubmit them within 7 days of notification by the Engineer. Allow 7 days for the Engineer's review of the resubmittal.

Errors or omissions on schedules do not void your responsibility for completing all work within the time specified for completion of the work.

If either you or the Engineer discovers that any aspect of the schedule has an error or omission after a schedule has been accepted, correct it on the next updated schedule.

8-1.02B Level 1 Critical Path Method Schedule

8-1.02B(1) General

Section 8-1.02B applies to a contract with a total Bid less than $1 million and less than 100 original working days.

Before or at the preconstruction conference, submit a CPM baseline schedule.

For each schedule submittal:

1. Submit a plotted original, time-scaled network diagram on a sheet at least 8-1/2 by 11 inches with a title block and timeline
2. If a computer program is used to make the schedule, submit a read-only compact disc or other Engineer-authorized data-storage device containing the schedule data. Label the data storage device with:
   - 2.1. Contract number
   - 2.2. CPM schedule number and date produced
   - 2.3. File name

8-1.02B(2) Schedule Format

On each schedule, show:

1. Planned and actual start and completion date of each work activity, including applicable:
   1.1. Submittal development
   1.2. Submittal review and acceptance
   1.3. Material procurement
   1.4. Contract milestones and constraints
   1.5. Equipment and plant setup
   1.6. Interfaces with outside entities
   1.7. Erection and removal of falsework and shoring
   1.8. Test periods
   1.9. Major traffic stage change
   1.10. Final cleanup
2. Order that you propose to prosecute the work
3. Logical links between the time-scaled work activities
4. All controlling activities
5. Legible description of each activity
6. At least 1 predecessor and 1 successor to each activity except for project start and project end milestones
7. Duration of at least 1 working day for each activity
8. Start milestone date as the Contract approval date

8-1.02B(3) Updated Schedule

Submit a monthly updated schedule that includes the status of work completed to date and the work yet to be performed as planned.

You may include changes on updated schedules that do not alter a critical path or extend the scheduled completion date compared to the current schedule. Changes may include:

1. Adding or deleting activities
2. Changing activity constraints
3. Changing durations
4. Changing logic

If any proposed change in planned work results in altering the critical path or extending the scheduled completion date, submit a revised schedule within fifteen (15) days of the proposed change.

8-1.02C Level 2 Critical Path Method Schedule

8-1.02C(1) General

Section 8-1.02C applies to a contract with (1) a total Bid less than $1 million and 100 or more original working days, (2) a total Bid from $1 to $5 million, or (3) a total Bid over $5 million and less than 100 original working days.

Use computer software to prepare each schedule.

8-1.02C(2) Schedule Format

For the schedule format, comply with the 1st paragraph of Section 8-1.02B(2) and show:

1. Calculations using the CPM to determine controlling activities.
2. Duration activities less than 20 working days.
3. Each required constraint. Constraints other than those required by the specifications may be included only if authorized.

8-1.02C(3) Computer Software

8-1.02C(3)(a) General

Submit a description of your proposed schedule software for authorization.
Software must be compatible with the current version of the Microsoft Windows operating system in use by the Engineer.

The schedule software must include the latest version of Primavera P6 for Windows or equal.

Any proposed schedule software equal to Primavera P6 must be capable of:

1. Generating files that can be imported into Primavera P6
2. Comparing 2 schedules and providing reports of changes in activity ID, activity description, constraints, calendar assignments, durations, and logic ties

8-1.02C(3)(b) Reserved

8-1.02C(4) Data and Network Diagrams

For each schedule, submit:

1. 1 data-storage device containing the schedule data
2. 2 sets of originally plotted, time-scaled network diagrams

The data-storage device must comply with item 2 of the 3rd paragraph of Section 8-1.02B(1).

The time-scaled network diagrams must:

1. Show a continuous flow of information from left to right
2. Be based on early start and early finish dates of activities
3. Clearly show the primary critical path using graphical presentation
4. Be on 11 by 17 inches or larger sheets
5. Include a title block and a timeline on each page

8-1.02C(5) Baseline Schedule

Submit a baseline schedule and all support data within 20 days of Contract approval. Allow 20 days for the Engineer's review after the submittal.

Starting the week the baseline schedule is first submitted, meet with the Engineer weekly to discuss and resolve schedule issues until the baseline schedule is accepted.

The baseline schedule must include the entire scope of work and how you plan to complete all work contemplated.

The baseline schedule must show the activities that define the critical path. Multiple critical paths and near-critical paths must be kept to a minimum. A total of not more than 50 percent of the baseline schedule activities must be critical or near critical unless otherwise authorized.

The baseline schedule must not extend beyond the number of original working days.

8-1.02C(6) Updated Schedule

Each updated schedule must comply with section 8-1.02B(3).

Meet with the Engineer to review work progress on or before the 1st day of each month, starting 1 month after the baseline schedule is accepted.

Allow 15 days for review after the updated schedule and all support data are submitted. The review period does not start until the previous month's required schedule is accepted.

Updated schedules not accepted or rejected within the review period are accepted.

The updated schedule must:

1. Have a data date of the 21st day of the month or other date established by the Engineer

2. Show changes from accepted revised schedules

8-1.02C(7) Final Updated Schedule

Submit a final updated as-built schedule with actual start and finish dates for the activities within 30 days after work completion.

Submit a written certificate with this submittal signed by your project manager or an officer of the company stating:

> "To my knowledge and belief, the enclosed final updated schedule reflects the actual start and finish dates of the actual activities for the project contained herein."

An officer of the company may delegate in writing the authority to sign the certificate to a responsible manager.

8-1.02D Level 3 Critical Path Method Schedule

8-1.02D(1) General

Section 8-1.02D applies to a contract with a total Bid over $5 million and 100 or more original working days.

Use computer software to prepare each schedule.

8-1.02D(2) Schedule Format

For the schedule format, comply with Section 8-1.02C(2) and show:

1. At least 50 but not more than 500 activities unless authorized. The number of activities must be sufficient to assure adequate planning of the project, to permit monitoring and evaluation of progress, and to do an analysis of time impacts.
2. County-owned float as the predecessor activity to the scheduled completion date.
3. Activities with identification codes for responsibility, stage, work shifts, location, and bid items.

You may show early completion time on any schedule if you comply with the Contract. Early completion time is a resource for your exclusive use. You may increase early completion time by improving production, reallocating resources to be more efficient, performing sequential activities concurrently, or by completing activities earlier than planned.

You may show a scheduled completion date that is later than the work completion date on an updated schedule after the baseline schedule is accepted. Provide an explanation for a late scheduled completion date in the narrative report included with the schedule.

8-1.02D(3) Computer Software

Computer software must comply with Section 8-1.02C(3).

8-1.02D(4) Data, Network Diagrams, and Reports

For each schedule submittal, submit:

1. 1 data-storage device containing the schedule data
2. 2 sets of originally plotted, time-scaled network diagrams
3. 2 copies of a narrative report

The data-storage device must comply with item 2 of the 3rd paragraph of Section 8-1.02B(1).

The network diagrams must comply with Section 8-1.02C(4) except the sheets must be 34 by 44 inches.

The narrative report must be organized in the following sequence with all applicable documents included:

1. Transmittal letter
2. Work completed during the period

3. Identification of unusual conditions or restrictions regarding labor, equipment, or material; including multiple shifts, 6-day work weeks, specified overtime or work at times other than regular days or hours
4. Description of the current critical path
5. Changes to the critical path and scheduled completion date since the last schedule submittal
6. Description of problem areas
7. Current and anticipated delays, including:
   7.1. Cause of delay
   7.2. Impact of delay on other activities, milestones, and completion dates
   7.3. Corrective action and schedule adjustments to correct the delay
8. Pending items and status of:
   8.1. Permits
   8.2. Change orders
   8.3. Time adjustments
   8.4. Noncompliance notices
9. Reasons for an early or late scheduled completion date in comparison to the work completion date

A schedule submittal is complete only when all documents and data are submitted as specified in Section 8-1.02D(4).

8-1.02D(5) Preconstruction Scheduling Conference

Hold a preconstruction scheduling conference with your project manager and the Engineer within 15 business days after receipt of the fully executed Contract. At the discretion of the Engineer, this meeting may be combined with the preconstruction conference. The Engineer conducts the conference and reviews Section 8-1.02D with you.

Within 10 buinsess days after receipt of the fully executed Contract, submit a general time-scaled logic diagram showing the major activities and sequence of planned operations. Be prepared to discuss the proposed work plan and schedule methodology during the preconstruction scheduling conference.

If the Contract includes construction staging and you propose changes to the described staging, the general time-scaled logic diagram must show the changes and resulting time impacts. Be prepared to discuss the proposal.

At this conference, submit the alphanumeric coding structure and activity identification system for labeling work activities.

To easily identify relationships, each activity description must indicate its associated scope or location of work by including such terms as quantity of material, type of work, bridge number, station to station location, side of highway (such as left, right, northbound, or southbound), lane number, shoulder, ramp name, ramp line descriptor, or mainline.

The Engineer reviews the logic diagram, coding structure, and activity identification system and provides any required baseline schedule changes to you for implementation.

8-1.02D(6) Baseline Schedule

The baseline schedule must comply with Section 8-1.02C(5).

The baseline schedule must have a data date of Contract approval.

If you submit an early completion baseline schedule that shows work completion in less than 85 percent of the original working days, the baseline schedule must be supplemented with resource allocations for every task activity and include time-scaled resource histograms. Resource allocations must be shown to a level of detail that facilitates report generation based on labor crafts and equipment classes for you and your subcontractors.

Use average composite crews to display the labor loading of job site construction activities. Optimize and level labor to reflect a reasonable plan for accomplishing the work and to assure that resources are not duplicated in concurrent activities.

The time-scaled resource histograms must show labor crafts and equipment classes to be used.

The Engineer may review the baseline schedule activity resource allocations using *Means Productivity Standards for Construction* or equivalent to determine whether the schedule is practicable.

8-1.02D(7) Updated Schedule

The updated schedule must comply with Section 8-1.02C(6) except the 5th paragraph.

The updated schedule must:

1. Have a data date of the 21st day of the month or other date established by the Engineer
2. Show the status of work actually completed to date and the work yet to be performed as planned
3. Show actual activity start dates, percent complete, and finish dates
4. Show durations for work that has been completed as the work actually occurred, including the Engineer's review and your resubmittal times

Justify in writing the reasons for any changes to planned work. If any proposed changes in planned work results in altering a critical path or near critical path or extending the schedule completion date, submit a revised schedule and a TIA within 15 days of the proposed change.

8-1.02D(8) Time Impact Analysis

8-1.02D(8)(a) General

Submit a TIA with each request for adjustment of Contract time or whenever you or the Engineer considers that an authorized or anticipated change may impact the critical path or work progress.

The TIA must:

1. Illustrate the impacts of each change or delay on the current scheduled completion date or internal milestone.
2. Use the accepted schedule that has a data date closest to and before the event. If the Engineer determines that the accepted schedule used does not appropriately represent the conditions before the event, the accepted schedule must be updated to the day before the event being analyzed.
3. Include an impact schedule developed from incorporating the event into the accepted schedule by adding or deleting activities or by changing durations or logic of existing activities. If the impact schedule shows that incorporating the event modifies the critical path and scheduled completion date of the accepted schedule, the difference between scheduled completion dates of the 2 schedules must be equal to the adjustment of Contract time.

The Engineer may construct and use an appropriate project schedule or other recognized method to determine adjustments in Contract time until you submit the TIA.

Submit 2 copies of the TIA within 20 days of receiving a written request for a TIA. Allow the Engineer 15 days after receipt to review the submitted TIA. Authorized TIA schedule changes must be shown on the next updated schedule.

If a TIA you submit is rejected, meet with the Engineer to discuss and resolve issues related to the TIA. If clarification is needed after you meet, you are allowed 15 days to submit a protest. If agreement is not reached, you are allowed 5 days from the date you receive the Engineer's response to your protest to submit an *Initial Potential Claim Record.*

Show only actual as-built work, not unauthorized changes related to the TIA, in subsequent updated schedules.

If agreement is reached at a later date, the authorized TIA schedule changes must be shown on the next updated schedule.

The County withholds remaining payment on the progress schedule (critical path method) bid item if a TIA is requested and not submitted within 20 days.

The County returns the withhold in the next progress payment after the submittal of the requested TIA.

8-1.02D(8)(b) County-Owned Float

Prepare a TIA whenever requested to determine the effect of County-owned float. County-owned float is a resource for the exclusive use of the County.

The Engineer may accrue County-owned float by early review completion of any submittal if the early review completion saves time on the critical path.

The Engineer documents County-owned float by ordering you to update the County-owned float activity on the next updated schedule.

Include a log of the action on the County-owned float activity and include a discussion of the action in the narrative report.

The Engineer may use County-owned float to mitigate past, present, or future County delays by offsetting a potential time extension for a *Change Order*.

8-1.02D(8)(c) Ordered Changes

For an ordered change that affects the scheduled completion date, prepare a TIA to determine the effect of adjusting Contract working days.

Include the impacts of the ordered change in the next updated schedule.

An ordered change that affects the controlling activity on the critical path is a basis for a time adjustment.

The County grants a time extension only if the total float is absorbed and the scheduled completion date is delayed 1 or more working days due to the ordered change.

8-1.02D(9) Final Updated Schedule

The final updated schedule must comply with Section 8-1.02C(7).

8-1.02D(10) Payment

If the Bid Item List contained a separate bid item entitled “progress schedule (critical path method)” the County pays you for progress schedule (critical path method) as follows:

1. A total of 25 percent of the item total is paid upon:
   1.1. Completion of 5 percent of all work
   1.2. Acceptance of schedules and authorization of TIAs required when 5 percent of all work is complete
2. A total of 50 percent of the item total is paid upon completion of 25 percent of all work and acceptance of schedules and authorization of TIAs required when 25 percent of all work is complete
3. A total of 75 percent of the item total is paid upon completion of 50 percent of all work and acceptance of schedules and authorization of TIAs required when 50 percent of all work is complete
4. A total of 100 percent of the item total is paid upon completion of all work, acceptance of schedules and authorization of TIAs required when all work is complete, and submittal of the certified final updated schedule

The County does not adjust payment for any increased or decreased work ordered in submitting schedules.

8-1.02E–8-1.02F Reserved

8-1.03 PRECONSTRUCTION CONFERENCE

Attend a preconstruction conference with key personnel, including your assigned representative, at a time and location determined by the Engineer. Submit documents as required before the

preconstruction conference. The County will provide you at least 5 days advanced notice of the date and time of the meeting.

The number of working days will be reduced by 1 working day for each day you fail to attend the conference with the appropriate representatives.

If the County elects to not hold the preconstruction conference meeting you will be notified in writing.

Be prepared to discuss the topics and documents shown in the following table:

Topics	Document
Potential claim and dispute resolution	Potential claim forms
Contractor's representation	Assignment of Contractor's representative
DBE	Final utilization reports
Equipment	Equipment list
Labor compliance and equal employment opportunity	Job site posters and benefit and payroll reports
Material inspection	*Notice of Materials to be Used*
Measurements	--
Quality control	QC plans
Safety	Injury and Illness Prevention Program and job site posters
Schedule	Baseline schedule and *Weekly Statement of Working Days*
Subcontracting	*Subcontracting Request*
Surveying	*Survey Request and 30-day Staking Schedule*
Traffic control	Traffic contingency plan and traffic control plans
Utility work	--
Weight limitations	--
Water pollution control	SWPPP or WPCP
Work restrictions	PLACs
Action submittals	--

8-1.04 START OF JOB SITE ACTIVITIES

8-1.04A General

Reserved

8-1.04B Standard Start

Start job site activities within ten (10) working days from the date of receipt of the Notice to Proceed. Do not begin work before receiving the Notice to Proceed.

Submit a notice 72 hours before starting job site activities. If the project has more than 1 location of work, submit a separate notice for each location.

8-1.04C Delayed Start

Reserved

8-1.04D Early Return-Early Start

Reserved

8-1.04E Next-Day Start

Reserved

8-1.04F–8-1.04J Reserved

8-1.05 TIME

Contract time starts the first working day after the Contractor receives the Notice to Proceed

Complete the work within the Contract time.

Meet each specified Milestone.

The Engineer issues a *Weekly Statement of Working Days* by the end of the following week.

The *Weekly Statement of Working Days* shows:

1. Working days and non–working days during the reporting week
2. Time adjustments, if any
3. Work completion date computations, including working days remaining
4. Controlling activities

8-1.06 SUSPENSIONS

The Engineer may suspend work wholly or in part due to conditions unsuitable for work progress. Contractor shall provide for public safety and a smooth and unobstructed passageway through the work zone during the suspension as specified under sections 7-1.03 and 7-1.04.

The Engineer may suspend work wholly or in part due to your failure to (1) fulfill the Engineer's orders, (2) fulfill a Contract part, or (3) perform weather-dependent work when conditions are favorable so that weather-related unsuitable conditions are avoided or do not occur. The County may provide for a smooth and unobstructed passageway through the work during the suspension and deduct the cost from payments. The County does not make a time adjustment for the suspension.

Upon the Engineer's order of suspension, suspend work immediately. Resume work when ordered.

8-1.07 DELAYS

8-1.07A General

In order to claim a delay-related time or payment adjustment, Contractor must follow the claim submittal process set forth in these General Conditions. The Contractor may request a delay-related time or payment adjustment through an RFI, but this does not excuse the Contractor from fully and timely complying with the Claims procedures.

8-1.07B Time Adjustments

8-1.07B(1) Delays to Critical Path

Extensions of time, when granted, will be based upon the effect of delays to the critical path of the Work as a whole and will not be granted for non-controlling delays to included portions of Work unless it can be shown that such delays did, in fact, delay the progress of the Work as a whole.

8-1.07B(2) Conditions to Time Extensions

The Contract Time or Milestones shall be extended only if, in the opinion of County, the Contractor is necessarily delayed in completing the Contract by a cause that meets all of the following conditions:

1. Such cause is beyond the control of Contractor, its Subcontractors, or material suppliers and is not due, in whole or in part, to the breach, negligence or fault of Contractor, its Subcontractors, or material suppliers;

2. Such cause arises after the Bid deadline and neither was nor could have been anticipated before the Bid deadline;

3. The effect of such cause could not be anticipated and avoided or mitigated by the exercise of all reasonable precautions, efforts and measures by the Contractor, including re-planning, scheduling and re-sequencing;

4. Such cause, in fact, results in a delay in the performance of the critical path of the Work, which is not thereon thereafter recovered;

5. Contractor has given notice thereof and provided the back-up documentation and analysis as required by the Contract Documents or as requested by the Engineer or County including but not limited to as-planned versus as-built schedules; and

6. The Contractor has exercised all reasonable precautions, efforts and measures to accomplish such changes in the Work without extending the date for completion.

8-1.07B(3) Excusable Non-Compensable Delay

The Parties acknowledge that "Force Majeure" events, as defined in Section 1-1.07B, are not within the responsibility or control of the County or are reasonably contemplated by the Parties to occur during the course of performance of the Work, which may impact the schedule for performance of the Work and may entitle Contractor to an extension of the Contract Time ("Excusable Non-Compensable Delays"). If the Critical Path of the Work is delayed by Excusable Non-Compensable Delays, provided that such delays did not result from the acts of Contractor and further provided that Contractor takes reasonable precautions to prevent further delays owing to such causes, then the Contract Time and/or Milestones shall be extended by a Change Order or Construction Change Directive.

An extension to the Contract Time and/or to the completion Milestone(s) identified in the Contract Documents shall be the Contractor's sole remedy for Excusable Non-Compensable Delays. In no event shall Contractor be entitled to any compensation or recovery of any damages in connection with the Excusable Non-Compensable Delays defined above.

8-1.07B(4) Excusable Compensable Delay

"Excusable Compensable Delay" means any delay to the critical path of the Work occurring after commencement and prior to completion of the Work:

1. which directly impacts the number of Working Days established in the Agreement for completion;

2. for which County is responsible, is unreasonable under the circumstances involved, and not within the contemplation of the Parties; and

3. is not due, in whole or in part, to the breach, negligence, or fault of Contractor, its Subcontractors, or suppliers. Contractor's remedy for Excusable Compensable Delay shall be extension of the date for completion and Milestones subject to the Conditions to Time Extensions identified above and reimbursement of actual costs directly resulting from such delays and markup in accordance with Section 9.

8-1.07B(5) Inexcusable Delay

"Inexcusable Delay" means any delay in the critical path of activities required for completion of the Work resulting from causes other than those deemed to be an Excusable Non-Compensable Delay or an Excusable Compensable Delay by these General Conditions. An Inexcusable Delay shall not entitle Contractor to either an extension of the date for completion or Milestones or to any additional compensation whatsoever.

8-1.07B(6) Concurrent Delays

To the extent the Contractor is entitled to an extension of time due to an Excusable Non-Compensable Delay or to an Excusable Compensable Delay, but the performance of the Work is independently suspended, delayed, or interrupted by an Inexcusable Delay, the delay shall be deemed to be a "Concurrent Delay."

In the case of a Concurrent Delay, Contractor shall be entitled to an extension of the Contract Time or Milestone(s) and Contractor shall not be entitled to any additional compensation whatsoever during the period of Concurrent Delay.

8-1.07B(7) Claim for Additional Time

Any claim for extension of time shall be made in writing within the time limits provided in Section 5-1.43 herein. Within ten (10) calendar days after commencement of such delay the Contractor shall furnish the Engineer with detailed information concerning the circumstances of the delay, the number of days actually delayed, the appropriate Contract Document references, and the measures taken to prevent or minimize the delay including an as-planned versus as-built schedule. The Contractor acknowledges the extreme importance of promptly notifying and thoroughly documenting any request for time extension and further specifically acknowledges that the County will suffer extreme prejudice should Contractor fail in any way to comply with this requirement.

8-1.07B(8) Limits on Adjustment of Contract Time or Contract Sum for Material Shortages or Cost Escalation

No extension of Contract Time or adjustment of the Contract Price will be granted for a delay caused by a shortage of materials, unless the Contractor furnishes to the County documented proof that the Contractor has diligently made every effort to obtain such materials from every known source within reasonable reach of the Work. The Contractor shall also submit proof, in the form of network analysis data that the inability to obtain such materials when originally planned did, in fact, cause a delay in completion of the Work which could not be compensated for by revising the sequence of operations. Only the physical shortage of material will be considered under these provisions as a cause for extension of time. No consideration will be given to any claim for adjustment of the Contract Price on the basis that material could not be obtained at a reasonable, practical, or economical cost, unless it is shown to the satisfaction of the County that such material could have been obtained only at exorbitant prices, entirely inconsistent with current rates taking into account the quantities involved and the usual practices in obtaining such quantities and that such fact could not have been known or anticipated at the time of Bid submission.

Contractor is aware that governmental agencies, such as gas companies, electrical utility companies, water districts and other agencies, may be required to approve Contractor-prepared drawings or approve a proposed installation. Contractor has endeavored to include the cost of such anticipated delays and related costs which may be caused by such agencies in Contractor's Bid. Thus, Contractor is not entitled to make claim upon the County for damages or delays arising from the delays caused by such agencies. Furthermore, the Contractor has scheduled for such delays and is not entitled to an extension of time for delays caused by governmental agencies which Contractor must obtain approvals from. No extension of time will be granted under this Section 8-1.07B for any delay to the extent: (1) that performance would have been so delayed by any Contractor induced causes, including but not limited to the fault or negligence of the Contractor or its Subcontractors; or (2) for which any remedies are provided for or excluded by any other provision of the Contract.

8-1.07B(9) No Release of Sureties

An extension of time granted shall not release the sureties from their obligations. Work shall continue and be carried on in accordance with all the provisions of the Contract and the Contract shall be and shall remain in full force and effect during the continuance and until the completion and the County's final acceptance of the Work covered by this Contract unless formally suspended or annulled in accordance with the terms of the Contract Documents.

8-1.07B(10) No Waiver by County

Neither the grant of an extension of time beyond the date fixed for the completion of any part of the Work nor the doing and acceptance of any part of the Work or materials specified by this Contract after the time specified for the completion of the Work, shall be deemed to be a waiver of any other rights and remedies under the Contract.

8-1.07B(11) County's Right to Order Extraordinary Measures to Mitigate Delay

In the event of delays to the Project, the Engineer may order Extraordinary Measures as provided below.

8-1.07B(11)(a) Non-Compensable Extraordinary Measures

In the event the Engineer determines that the performance of the Work, or any portion thereof, has not progressed or reached the level of completion required by the Contract Documents due to causes within the control of Contractor, the Engineer shall have the right to order the Contractor to take corrective measures necessary to expedite the progress of construction, including, without limitation, (1) working additional shifts or overtime, (2) supplying additional manpower, equipment, and facilities, and (3) submitting a recovery schedule for re-sequencing performance of the Work or other similar measures (hereinafter referred to collectively as Extraordinary Measures). Such Extraordinary Measures shall continue until the progress of the Work complies with the stage of completion as required by the Contract Documents. The Contractor shall not be entitled to an adjustment in the Contract Price in connection with the Extraordinary Measures required by the County under or pursuant to this section. The County may exercise the rights furnished the County under or pursuant to this section as frequently as the County deems necessary to ensure that the Contractor's performance of the Work will comply with the Contract Time, or interim completion date set forth in the Contract Documents. If Contractor or its Subcontractors fail to commence Extraordinary Measures within forty-eight (48) hours of County's written demand, the County may, without prejudice to other remedies, take corrective action at the expense of Contractor.

8-1.07B(11)(b) Compensable Extraordinary Measures

The Engineer, in its discretion, may issue a written request, to the Contractor requesting Contractor to submit an itemized proposal for Extraordinary Measures in order to achieve early completion of all or a portion of the Work, due to no fault of the Contractor, in a form acceptable to the County within ten (10) calendar days after the County's issuance of the request. Contractor's proposal shall be limited to direct labor cost (itemized hours and rates) and overhead and profit on the labor costs.

8-1.07B(12) Continuation of the Work

If the construction of the Work is not completed within the Contract Time, as may be extended by the County, the Contractor shall continue performing the Work in accordance with the Contract Documents until the completion of and the acceptance of the Work, or Contractor's performance is suspended or terminated.

8-1.07C No Early Completion Delay Damages

While the Contractor may schedule completion of all of the Work, or portions thereof, earlier than the Contract Time, the County is exempt from liability for and the Contractor shall not be entitled to an adjustment of the Contract Price or to any additional costs, damages, including, but not limited to, claims for extended general conditions costs, home office overhead, jobsite overhead and management or administrative costs, or compensation whatsoever, for use of Float or for Contractor's inability to complete the Work earlier than the Contract Time for any reason whatsoever, including but not limited to, delay caused by the County or other Excusable Compensable Delay.

8-1.08–8-1.09 RESERVED

8-1.10 LIQUIDATED DAMAGES

8-1.10A General

The County specifies liquidated damages in the Agreement. Liquidated damages, if any, accrue starting on the 1st day after the expiration of the working days through the day of Contract acceptance.

The County withholds liquidated damages before the accrual date if the anticipated liquidated damages may exceed the value of the remaining work.

8-1.10B-8-1.10D Reserved

8-1.11–8-1.12 RESERVED

8-1.13 TERMINATION OF THE CONTRACT

8-1.13A Termination by the Contractor

The Contractor shall have the right to terminate the Contract only upon the occurrence of one of the following:

1. The Work stopped for ninety (90) consecutive days, though no act or fault of Contractor, any Subcontractor, or any employee or agent of Contractor or any Subcontractor, due to an issuance of an order of a court or other public authority having jurisdiction, or due to an act of government such as a declaration of a national emergency making material unavailable; or

2. The County fails to perform any material obligation under the Contract Documents and fails to cure such default within ninety (90) days after receipt of notice from Contractor stating the nature of such default.

8-1.13B Termination by the County for Cause

8-1.13B(1) Grounds

The County shall have the right to terminate the Contractor's performance of the Work, in whole or in part, if:

1. Contractor fails to promptly commence the Work or unnecessarily or unreasonably delays the Work or improperly discontinues the prosecution of the Work or abandons the Work;

2. Contractor refuses or fails to supply skilled supervisory personnel, an adequate number of properly skilled workers, proper materials, or necessary equipment to perform the Work in strict accordance with the Contract Documents, and the latest accepted schedule;

3. Contractor fails to make prompt payment of amounts properly due Subcontractors after receiving payment from the County;

4. Contractor disregards applicable laws, statutes, ordinances, codes, rules, regulations, or lawful orders of a public authority;

5. Contractor fails to resume performance of Work which has been suspended or stopped, within a reasonable time after receipt of notice from the County to do so or (if applicable) after cessation of the event preventing performance;

6. Any representation or warranty made by Contractor in the Contract Documents or any certificate, schedule, instrument, or other document delivered by Contractor pursuant to the Contract Documents shall have been false or materially misleading when made;

7. After commencement of the Work the County becomes aware that the Contractor is using an ineligible contractor, subcontractor, or supplier who was barred from performing work or providing materials or services on County projects at the time of Bid;

8. Contractor fails to make payment to Subcontractors for materials or labor in accordance with the respective Contract Documents and applicable law;

9. The Contract is assigned or the Work is sublet otherwise than as specified in the Contract Documents;

10. Contractor otherwise is guilty of breach of a provision of the Contract Documents; or

11. Contractor materially fails to execute the Work in accordance with the Contract Documents or, in the County's opinion, is violating any of the terms of the Contract or is not executing the Contract in good faith or is not following instructions of the County as to

additional force necessary in the opinion of the County for its completion within the required time.

8-1.13B(2) County's Rights Upon Termination of Contract

When any of the reasons specified above exist, the County may, in addition to and without prejudice to any other rights or remedies of the County, notify the Contractor not to resume or to discontinue all Work, or any part thereof, by written notice of default. The County will advise the performance bond surety of the notice of default and that it will be given fifteen (15) calendar days to arrange for completion of the Work in accordance with the Contract Documents by another contractor or contractors satisfactory to the County. Should the surety fail to effect satisfactory arrangements within said 15-day period, the County shall have the right to issue a notice of termination and to:

1. Exclude the Contractor from the Site;
2. Take possession of the Site and of all materials, equipment, tools and construction equipment, and machinery thereon owned by the Contractor;
3. Suspend any further payments to Contractor;
4. Accept assignment of subcontracts pursuant to Section 5-1.02; and
5. Finish the Work by whatever reasonable method the County may deem expedient.

When the County terminates the Contractor's performance of the Work for one of the reasons stated in this Section 8-1.13B, the Contractor shall not be entitled to receive further payment until the Work is finished.

The County shall charge the cost to complete the Work, including, but not limited to, protection, investigation, labor, services, equipment, materials, permits, fees, supervisory, and administrative costs to Contractor and its performance bond surety. If the unpaid balance of the Contract Price is less than all costs of finishing the Work, including compensation for the County's services and expenses made necessary thereby, and other damages incurred by the County and not expressly waived, the Contractor shall pay the difference to the County. This obligation for payment shall survive termination of the Contract. If the unpaid balance of the Contract Price is greater than all costs of finishing the Work, including compensation for the County's services and expenses made necessary thereby, the Contractor shall receive payment for Work properly performed by Contractor for which payment was not made previously; any excess amounts shall be retained by the County.

8-1.13B(3) Erroneous Termination

If it has been adjudicated or otherwise determined that the County has erroneously or negligently terminated the Contractor for cause, then said termination shall automatically convert to a termination by the County for convenience as set forth in Section 8-1.13C.

8-1.13B(4) Acceptance of Incomplete or Non-Conforming Work

In lieu of the provisions of this section for terminating the Contractor's performance, the County may pay the Contractor for the portion of Work completed according to the provisions of the Contract Documents and may treat the incomplete Work as if they had never been included or contemplated by this Contract, in which case the Contract Price will be reduced by the value of the deleted Work determined in accordance with Section 4-1.05L. The County may also exercise its rights under Section 6-3.07F relating to Acceptance of Nonconforming Work. No claim under this provision will be allowed the Contractor for overhead or prospective profits on Work not completed by the Contractor.

8-1.13B(5) Adequate Financial Assurances

It is recognized that if Contractor is adjudged a bankrupt or makes a general assignment for the benefit of creditors, or if a receiver is appointed for the benefit of its creditors, or if a receiver is appointed on account of Contractor's insolvency, this could impair or frustrate Contractor's performance of the Work. Accordingly, it is agreed that upon the occurrence of any such event,

the County shall be entitled to request of Contractor, or its successor in interest, adequate assurance of future performance in accordance with the terms and conditions hereof. Failure to comply with such request within five (5) calendar days of delivery of the request shall entitle the County to terminate the Contract and to the accompanying rights set forth above. Pending receipt of adequate occurrence of performance and actual performance in accordance therewith, the County shall be entitled to proceed with the Work with its own forces or with other contractors on a time and material or other appropriate basis, the cost of which will be backcharged against the Contract Price.

8-1.13C Termination by the County for Convenience

The County may, at any time, terminate the Contractor's performance of the Work, in whole or in part, for the County's convenience without regard to Contractor's fault or breach upon fourteen (14) calendar days' written notice to Contractor.

In the event that the County terminates Contractor's performance of the Work for convenience, Contractor agrees to waive any claims for damages, including, but not limited to, home office overhead, loss of anticipated profits on account thereof, and as the sole right and remedy of Contractor, the County shall pay Contractor in accordance with Section 8-1.13G below. The provisions of the Contract, which by their nature survive final acceptance of the Work, shall remain in full force and effect after such termination to the extent provided in such provisions.

8-1.13D Contractor's Duties Upon Termination

Upon receipt of written notice from the County of such termination for cause or for the County's convenience, the Contractor shall, unless the notice directs otherwise, do the following:

1. cease performance of the Work to the extent specified in the notice;
2. cooperate with the County to secure the site and demobilize in a safe and orderly fashion;
3. take actions necessary, or that the County may direct, for the protection and preservation of the Work;
4. except for Work directed to be performed in the notice, incur no further costs and enter into no further subcontracts and purchase orders;
5. if requested by the County, assign to the County, in the manner and to the extent directed, all of the right, title and interest to the Contractor under the subcontracts, and the County shall have no liability for acts, omissions or causes of action resulting therefrom which accrued prior to the date of termination and assignment, which liability shall remain with the Contract; and
6. turn over to the County, as soon as possible, but not later than thirty (30) days after receipt of such termination notice, the originals of all of the Contractor's records, files, documents, drawings and any other items relating to the Project, whether located on the Project site, at the Contractor's office or elsewhere.

8-1.13E Responsibility for Materials

Upon receiving a termination notice, protect unused material until:

1. You submit an inventory of materials already produced, purchased, or ordered but not yet used; include the location of the material.
2. The Engineer identifies materials that will be retained by the County. Submit bills of sales or other records of material title.
3. The Engineer confirms that unused materials paid by progress payment and materials furnished by the State have been delivered and stored as ordered.
4. The titles are transferred for materials purchased by the County.

Dispose of materials that will not be retained by the County.

8-1.13F Contract Acceptance after Termination

The Engineer recommends Contract acceptance after determining completion of:

1. Work ordered to be completed before termination
2. Other work ordered to secure the project before termination
3. Material delivery and title transfer

The County pays you under Section 9-1.17.

8-1.13G Payment Adjustment for Termination

If the County issues a termination notice, the Engineer determines payment for termination based on the following:

1. Direct cost for the work:
    - 1.1. Including:
        - 1.1.1. Mobilization.
        - 1.1.2. Demobilization.
        - 1.1.3. Securing the job site for termination.
        - 1.1.4. Losses from the sale of materials.
    - 1.2. Not including:
        - 1.2.1. Cost of materials you keep.
        - 1.2.2. Profit realized from the sale of materials.
        - 1.2.3. Cost of material damaged by:
            - 1.2.3.1. Act of God.
            - 1.2.3.2. Act of a public enemy.
            - 1.2.3.3. Fire.
            - 1.2.3.4. Flood.
            - 1.2.3.5. Governor-declared state of emergency.
            - 1.2.3.6. Landslide.
            - 1.2.3.7. Tsunami.
        - 1.2.4. Other credits.
2. Cost of remedial work, as estimated by the Engineer, is not reimbursed.
3. Allowance for profit not to exceed 4 percent of the cost of the work. Prove a likelihood of having made a profit had the Contract not been terminated.
4. Material handling costs for material returned to the vendor or disposed of as ordered.
5. Costs in determining the payment adjustment due to the termination, excluding attorney fees and litigation costs.

Termination of the Contract does not relieve the surety of its obligation for any just claims arising out of the work performed.

8-1.14–8-1.16 RESERVED

9 PAYMENT

9-1.01 GENERAL

Section 9 includes specifications related to work payment.

9-1.02 MEASUREMENT

9-1.02A General

Bid item quantities are determined under U.S. customary units.

Except for final pay item quantities are measured for payment.

9-1.02B Weighing Equipment and Procedures

9-1.02B(1) General

Measure material quantities for payment with devices that comply with:

1. 4 CA Code of Regulations § 4000 et seq.
2. Business and Professions Code § 12001 et seq.

To determine the material payment quantities, use measuring devices that have been sealed by the County of Food and Agriculture's Division of Measurement Standards or its designated representative.

If a device is not type approved by the Division of Measurement Standards, type approve it under California Test 109.

Notify the Engineer at least 1 business day in advance of equipment testing.

Use material plant controllers having elements affecting the data accuracy and delivery that have been sealed by the Engineer. Make these elements available to the Engineer for inspection. If the elements are adequate for use, the Engineer seals them. If security seal manipulation occurs, stop material production. Do not resume production until the Engineer reinspects and reseals the device.

Measure material paid for by weight on sealed scales regularly inspected by the Department of Food and Agriculture's Division of Measurement Standards or its designated representative.

Obtain authorization of portable vehicle scale installations before sealing.

9-1.02B(2) Equipment

Each scale must be long enough to fit an entire vehicle or a combination vehicle on the scale deck. The County allows you to weigh a combination vehicle separately if you disconnect the vehicles.

Construct scale undersupports:

1. Using portland cement concrete containing at least 470 pounds of cement per cubic yard produced from commercial quality materials
2. Such that footing heights are at least 20 inches thick
3. With a bearing surface at least 30 inches wide and bearing pressure on the footing not over 4000 lb/sq ft

In constructing a scale:

1. Furnish drainage to prevent water from saturating the ground under the scale
2. Use bulkheads that prevent displacement
3. If shimming is necessary:
   - 3.1. Use securely attached metal shims or grout
   - 3.2. Do not use wedges to shim the supports
   - 3.3. Do not use shim material in excess of 3 inches

4. Install mechanical indicating elements level, plumb, and rigidly mounted on the concrete undersupports
5. For a hopper scale, rigidly attach hopper scale lever systems and mechanical indicating elements so no weight is lost from bending or support distortion

Each scale used to determine material payment quantities must be operated by a licensed weighmaster (Business and Professions Code § 12700 et seq.).

Submit a public weighmaster's certificate or certified daily summary weigh sheets for each weighed material quantity. The County may witness material weighing and check and compile the daily scale weight record.

Each vehicle operator must obtain weight or load slips from the weighmaster. Submit these records at the delivery point.

9-1.02B(3) Procedures

Weigh empty vehicles used to haul material paid for by weight daily. Each vehicle must have a legible identification mark. The County may verify material weight by having an empty and loaded vehicle weighed on any scale the Engineer designates.

If imported topsoil, soil amendment, or mulch is measured by volume:

1. Each vehicle must allow for an accurate contents determination
2. Unless vehicles are of uniform capacity, each vehicle must have a legible identification mark showing its volume capacity
3. Load vehicles to at least the volume capacity
4. Level vehicle loads on arrival at the delivery point

If determining a quantity paid on a volume basis is impractical or if you request and the request is authorized, weigh the material and the Engineer converts the result to a volume measurement. The Engineer determines the conversion factors and, if you agree, adopts this method of measurement.

9-1.02C Final Pay Item Quantities

The County shows a bid item quantity as a final pay item for payment purposes only. For a final pay item, accept payment based on the Bid Item List quantity, regardless of actual quantity used unless dimensions are changed by the Engineer.

9-1.02D Quantities of Aggregate and Other Roadway Materials

The weight of aggregate and other roadway material that are being paid for by weight are determined as shown in the following table and does not include the deducted weight of water in their payment quantities:

Determination of Quantities of Aggregate and Other Roadway Materials

Material	Quantity determination
Aggregate or other roadway material except as otherwise shown in this table	By deducting the weight of water in the material[a] in excess of 3 percent of the dry weight of the material from the weight of the material
Imported borrow, imported topsoil, aggregate subbase	By deducting the weight of water in the material[a] in excess of 6 percent of the dry weight of the material from the weight of the material
Straw	By deducting the weight of water in the material[a] in excess of 15 percent of the dry weight of the material from the weight of the material
Fiber[b]	Engineer does not deduct the weight of water
Aggregate base and aggregate for cement treated bases	As specified in Section 26 and Section 27 of the Standard Specifications

NOTE: Percentage of water is determined by California Test 226.
[a]At the time of weighing
[b]Weight of water in the fiber[a] must not exceed 15 percent of the dry weight of the fiber.

9-1.03 PAYMENT SCOPE

The County pays you for furnishing the resources and activities required to complete the work. The County's payment is full compensation for furnishing the resources and activities, including, but not limited to:

1. Risk, loss, damage repair, or cost of whatever character arising from or relating to the work and performance of the work
2. PLACs and taxes
3. Any royalties and costs arising from patents, trademarks, and copyrights involved in the work

The County does not pay for your loss, damage, repair, or extra costs of whatever character arising from or relating to the work that is a direct or indirect result of your choice of construction methods, materials, equipment, or manpower, unless specifically mandated by the Contract.

Payment is:

1. Full compensation for all work involved in each bid item shown on the Bid Item List by the unit of measure shown for that bid item
2. For the price bid for each bid item shown on the Bid Item List or as changed by Change Order

Full compensation for work specified in these General Conditions and Division II and X of the Standard Specifications is included in the payment for the bid items unless:

1. Bid item for the work is shown on the Bid Item List
2. Work is specified as Change Order Work

Work paid for under one bid item is not paid for under any other bid item.

Payment for a bid item includes payment for all work and costs relating to that bid item under the Contract Documents, including all profit and any and all direct and indirect costs, including but not limited to overhead, bonds, insurance, and any other fixed or administrative costs.

If the amount of a deduction or withhold exceeds final payment, the County shall invoice Contractor for the difference; Contractor shall pay said invoice upon receipt.

9-1.04 FORCE ACCOUNT

9-1.04A General

For work paid by force account, the Engineer compares the County's records to your daily force account work report (using Caltrans form). When you and the Engineer agree on the contents of the daily force account work reports, the Engineer accepts the report and the County pays for the work. If the records differ, the County pays for the work based only on the information shown on the County's records.

If a subcontractor performs work at force account, accept an additional 10 percent markup to the total cost of that work paid at force account, including markups specified in Section 9-1.04, as reimbursement for additional administrative costs.

The markups specified for labor, materials, and equipment include compensation for all delay costs, overhead costs, and profit.

If an item's unit price is adjusted for work-character changes, the County excludes your cost of determining the adjustment.

Payment for owner-operated labor and equipment is made at the market-priced invoice submitted.

9-1.04B Labor

Labor payment is full compensation for the cost of labor used in the direct performance of the work plus a 35 percent markup. Force account labor payment consists of:

1. Employer payment to the worker for:
   - 1.1. Basic hourly wage
   - 1.2. Health and welfare
   - 1.3. Pension
   - 1.4. Vacation
   - 1.5. Training
   - 1.6. Other State and federal recognized fringe benefit payments
2. Labor surcharge percentage in *Labor Surcharge and Equipment Rental Rates* current during the work paid at force account for:
   - 2.1. Workers' compensation insurance
   - 2.2. Social security
   - 2.3. Medicare
   - 2.4. Federal unemployment insurance
   - 2.5. State unemployment insurance
   - 2.6. State training taxes
3. Subsistence and travel allowances paid to the workers
4. Employer payment to supervisors, if authorized

The 35 percent markup consists of payment for all overhead costs related to labor but not designated as costs of labor used in the direct performance of the work including:

1. Home office overhead
2. Field office overhead
3. Bond costs
4. Profit
5. Labor liability insurance
6. Other fixed or administrative costs that are not costs of labor used in the direct performance of the work

9-1.04C Materials

Material payment is full compensation for materials you furnish and use in the work. The Engineer determines the cost based on the material purchase price, including delivery charges, except:

1. A 15 percent markup is added

2. Supplier discounts are subtracted whether you took them or not
3. If the Engineer believes the material purchase prices are excessive, the County pays the lowest current wholesale price for a similar material quantity
4. If you procured the materials from a source you wholly or partially own, the determined cost is based on the lower of the:
   4.1. Price paid by the purchaser for similar materials from that source on Contract items
   4.2. Current wholesale price for those materials
5. If you do not submit a material cost record within 30 days of billing, the determined cost is based on the lowest wholesale price:
   5.1. During that period
   5.2. In the quantities used

9-1.04D Equipment Rental

9-1.04D(1) General

Equipment rental payment is full compensation for:

1. Rental equipment costs, including moving rental equipment to and from the Change Order Work site using its own power.
2. Transport equipment costs for rental equipment that cannot be transported economically using its own power. No payment is made during transport for the transported equipment.
3. 15 percent markup.

If you want to return the equipment to a location other than its original location, the payment to move the equipment must not exceed the cost of returning the equipment to its original location. If you use the equipment for work other than work paid by force account, the transportation cost is included in the other work.

Before moving or loading the equipment, obtain authorization for the equipment rental's original location.

The Engineer determines rental costs:

1. Using rates in *Labor Surcharge and Equipment Rental Rates*:
   1.1. By classifying equipment using manufacturer's ratings and manufacturer-approved changes.
   1.2. Current during the work paid by force account.
   1.3. Regardless of equipment ownership; but the County uses the rental document rates or minimum rental cost terms if:
      1.3.1. Rented from equipment business you do not own.
      1.3.2. The Labor Surcharge and Equipment Rental Rates hourly rate is $10.00 per hour or less.
2. Using rates established by the Engineer for equipment not listed in *Labor Surcharge and Equipment Rental Rates*. You may submit cost information that helps the Engineer establish the rental rate; but the County uses the rental document rates or minimum rental cost terms if:
   2.1. Rented from equipment business you do not own.
   2.2. The Engineer establishes a rate of $10.00 per hour or less.
3. Using rates for transport equipment not exceeding the hourly rates charged by established haulers.

Equipment rental rates include the cost of:

1. Fuel
2. Oil
3. Lubrication
4. Supplies
5. Small tools that are not consumed by use
6. Necessary attachments
7. Repairs and maintenance
8. Depreciation
9. Storage
10. Insurance
11. Incidentals

The County pays for small tools consumed by use. The Engineer determines payment for small tools consumed by use based on Contractor-submitted invoices.

The Engineer may authorize rates in excess of those in the *Labor Surcharge and Equipment Rental Rates* if:

1. You submit a request to use rented equipment
2. Equipment is not available from your normal sources or from one of your subcontractors
3. Rented equipment is from an independent rental company
4. Proposed equipment rental rate is reasonable
5. The Engineer authorizes the equipment source and the rental rate before you use the equipment

The County pays for fuel consumed during the operation of rented equipment not included in the invoiced rental rates.

9-1.04D(2) Equipment On the Job Site

For equipment on the job site at the time required to perform work paid by force account, the time paid is the time:

1. To move the equipment to the location of work paid by force account plus an equal amount of time to move the equipment to another location on the job site when the work paid by force account is completed
2. To load and unload equipment
3. Equipment is operated to perform work paid by force account and:
   3.1. Hourly rates are paid in 1/2-hour increments
   3.2. Daily rates are paid in 1/2-day increments

9-1.04D(3) Equipment Not On the Job Site Required for Original-Contract Work

For equipment not on the job site at the time required to perform work paid by force account and required for original-Contract work, the time paid is the time the equipment is operated to perform work paid by force account and the time to move the equipment to a location on the job site when the work paid by force account is completed.

The minimum total time paid is:

1. 1 day if daily rates are paid
2. 8 hours if hourly rates are paid

If daily rates are recorded, equipment:

1. Idled is paid as 1/2 day
2. Operated 4 hours or less is paid as 1/2 day
3. Operated 4 hours or more is paid as 1 day

If the minimum total time exceeds 8 hours and if hourly rates are listed, the County rounds up hours operated to the nearest 1/2-hour increment and pays based on the hours shown the following table. The table does not apply when equipment is not operated due to breakdowns, in which case rental hours are the hours the equipment was operated.

Equipment Rental Hours

Hours operated	Hours paid
0.0	4.00
0.5	4.25
1.0	4.50
1.5	4.75
2.0	5.00
2.5	5.25
3.0	5.50
3.5	5.75

4.0	6.00
4.5	6.25
5.0	6.50
5.5	6.75
6.0	7.00
6.5	7.25
7.0	7.5
7.5	7.75
≥8.0	hours used

9-1.04D(4) Equipment Not On the Job Site Not Required for Original-Contract Work

For equipment not on the job site at the time required to perform work paid by force account and not required for original-Contract work, the time paid is the time:

1. To move the equipment to the location of work paid by force account plus an equal amount of time to return the equipment to its source when the work paid by force account is completed
2. To load and unload equipment
3. Equipment is operated to perform work paid by force account

9-1.04D(5) Non-Owner-Operated Dump Truck Rental

Submit the rental rate for non-owner-operated dump truck rental. The Engineer determines the payment rate. Payment for non-owner-operated dump truck rental is for the cost of renting a dump truck, including its driver. For the purpose of markup payment only, the non-owner-operated dump truck is rental equipment and the owner is a subcontractor.

9-1.05 EXTRA WORK PERFORMED BY SPECIALISTS

If the Engineer determines that you or your subcontractors are not capable of performing specialty extra work, a specialist may be used. Itemize the labor, material, and equipment rental costs unless it is not the special service industry's established practice to provide itemization, in which case, the Engineer accepts current market-priced invoices for the work.

The Engineer may accept an invoice as a specialist billing for work performed at an off–job site manufacturing plant or machine shop.

The Engineer determines the cost based on the specialist invoice price minus any available or offered discounts plus a 10 percent markup.

9-1.06 CHANGED QUANTITY PAYMENT ADJUSTMENTS

9-1.06A General

Not Used.

9-1.06B Increases of More Than 25 Percent

If the total bid item quantity exceeds 125 percent of the quantity shown on the Bid Item List and if no approved *Change Order* addresses payment for the quantity exceeding 125 percent, you may request a unit price adjustment. If an adjustment is warranted, the Engineer has the option of either adjusting the unit price for the excess quantity under Section 9-1.04 or the following:

1. The adjustment is the difference between the unit price and the unit cost of the total item pay quantity.
2. In determining the unit cost, the Engineer excludes the item's fixed costs. You have recovered the fixed costs in the payment for 125 percent shown on the Bid Item List.
3. After excluding fixed costs, the Engineer determines the item unit cost under Section 9-1.04.

If the payment for the number of units of a bid item in excess of 125 percent of the Bid Item List is less than $5,000 at the unit price, the Engineer may not adjust the unit price unless you request it.

Provide written request of adjustment with adequate, detailed data to support actual costs incurred.

9-1.06C Decreases of More Than 25 Percent

If the total item pay quantity is less than 75 percent of the quantity shown on the Bid Item List and if no approved *Change Order* addresses payment for the quantity less than 75 percent, you may request a unit price adjustment. If an adjustment is warranted, the Engineer has the option of either adjusting the unit price for the decreased quantity under Section 9-1.04 or the following:

1. The adjustment is the difference between the unit price and the unit cost of the total pay quantity.
2. In determining the unit cost, the Engineer includes the item's fixed costs.
3. After including fixed costs, the Engineer determines the item unit cost under Section 9-1.04.

The County does not pay more than 75 percent of the item total in the Bid Item List.

Provide written request of adjustment with adequate, detailed data to support actual costs incurred.

9-1.06D Eliminated Bid Items

If the Engineer eliminates a bid item, the County pays your costs incurred before the Engineer's elimination notification date only for that portion of the bid item that Contractor performed prior to elimination, if any.

If you order authorized material for an eliminated bid item before the notification date and the order cannot be canceled, either of the following occurs:

1. If the material is returnable to the vendor, the Engineer orders you to return the material and the County pays your handling costs and vendor charges.
2. The County pays Contractor’s actual cost for the material and its handling and becomes the material owner.

The Engineer determines the payment for the eliminated bid item pursuant to Section 9-1.04.

9-1.07 PAYMENT ADJUSTMENTS FOR PRICE INDEX FLUCTUATIONS

9-1.07A General

Section 9-1.07 applies only to asphalt contained in materials for pavement structure and pavement surface treatments such as HMA, tack coat, asphaltic emulsions, bituminous seals, asphalt binders, and modified asphalt binders placed in the work. Section 9-1.07 does not apply if you submitted a *Opt Out of Payment Adjustments for Price Index Fluctuations* form with your Bid.

The Engineer adjusts payment whenever the California statewide crude oil price index for the month the material is placed is more than 5 percent higher or lower than the price index at the time of bid.

Caltrans determines the California statewide crude oil price index each month on or about the 1st business day of the month using the average of the posted prices in effect for the previous month as posted by Chevron, ExxonMobil, and ConocoPhillips for the Buena Vista, and Midway Sunset fields.

If a company discontinues posting its prices for a field, the County determines the index from the remaining posted prices. The County may include additional fields to determine the index.

For the California statewide crude oil price index, go to the Caltrans Division of Construction website.

If the adjustment is a decrease in payment, the County deducts the amount from the monthly progress payment.

The County includes payment adjustments due to price index fluctuations for changed quantities under Section 9-1.06.

If you do not complete the work within the Contract time, payment adjustments during the overrun period are determined using the California statewide crude oil price index in effect for the month in which the overrun period began.

If the price index at the time of placement increases:

1. 50 percent or more over the price index at Bid opening, notify the Engineer.
2. 100 percent or more over the price index at Bid opening, do not furnish material containing asphalt until the Engineer authorizes you to proceed with that work. The County may decrease bid item quantities, eliminate bid items, or terminate the Contract.

Before placing material containing asphalt, submit the current sales and use tax rate in effect in the tax jurisdiction where the material is to be placed.

Submit a public weighmaster's certificate for HMA, tack coat, asphaltic emulsions, and modified asphalt binders, including those materials not paid for by weight. For slurry seals, submit a public weighmaster's certificate separately for the asphaltic emulsion.

9-1.07B Asphalt Quantities

9-1.07B(1) General

Reserved

9-1.07B(2) Hot Mix Asphalt

The quantity of asphalt in HMA is calculated using the following formula:

$Qh = HMATT \times Xa$

where:
Qh = quantity in tons of asphalt used in HMA
$HMATT$ = HMA, total tons placed
Xa = theoretical asphalt content from the job mix formula expressed as a percentage of the total weight of HMA

9-1.07B(3) Rubberized Hot Mix Asphalt

The quantity of asphalt in RHMA is calculated using the following formula:

$Qrh = RHMATT \times 0.80 \times Xarb$

where:
Qrh = quantity in tons of asphalt in asphalt rubber binder used in RHMA
$RHMATT$ = RHMA, total tons placed
$Xarb$ = theoretical asphalt rubber binder content from the job mix formula expressed as a percentage of the total weight of rubberized HMA

9-1.07B(4) Hot Mix Asphalt With Modified Asphalt Binder

The quantity of asphalt in HMA with modified asphalt binder is calculated using the following formula:

$Qmh = MHMATT \times [(100 - Xam) / 100] \times Xmab$

where:
Qmh = quantity in tons of asphalt in modified asphalt binder used in HMA
$MHMATT$ = modified asphalt binder HMA, total tons placed
Xam = specified percentage of asphalt modifier
$Xmab$ = theoretical modified asphalt binder content from the job mix formula expressed as a percentage of the total weight of HMA

9-1.07B(5) Hot Mix Asphalt Containing Reclaimed Asphalt Pavement

The quantity of asphalt in HMA containing RAP is calculated using the following formula:

$Qrap = HMATT \times Xaa$

where:
$Xaa = Xta - [(100 - Xnew) \times (Xra / 100)]$

and:
Qrap = quantity in tons of asphalt used in HMA containing RAP
HMATT = HMA, total tons placed
Xaa = asphalt content of HMA adjusted to account for the asphalt content in RAP expressed as a percentage of the total weight of HMA
Xta = total asphalt content of HMA expressed as a percentage of the total weight of HMA
Xnew = theoretical percentage of new aggregate in the HMA containing RAP determined from the RAP percentage in the job mix formula
Xra = asphalt content of RAP expressed as percentage

9-1.07B(6) Tack Coat

The quantity of asphalt in tack coat (Qtc) is calculated as either of the following:

1. Asphalt binder using the asphalt binder total tons placed as tack coat
2. Asphaltic emulsion by applying the formula in Section 9-1.07B(7) to the asphaltic emulsion total tons placed as tack coat

9-1.07B(7) Asphaltic Emulsion

The quantity of asphalt in asphaltic emulsions, including fog seals and tack coat, is calculated using the following formula:

$Qe = AETT \times (Xe / 100)$

where:
Qe = quantity in tons of asphalt used in asphaltic emulsions
AETT = undiluted asphaltic emulsions, total tons placed
Xe = minimum percent residue specified in Section 94 of the Standard Specifications based on the type of emulsion used

You may determine *Xe* by submitting daily test results for asphalt residue for the asphaltic emulsion used. If you choose this option, you must:

1. Take 1 sample for every 200 tons but not less than 1 sample per day in the presence of the Engineer from the delivery truck, at midload from a sampling tap or thief, and as follows:
   1.1. Draw and discard the 1st gallon
   1.2. Take 2 separate 1/2 gal samples
2. Submit the 1st sample at the time of sampling
3. Furnish the 2nd sample within 3 business days of sampling to an authorized laboratory that participates in the AASHTO Proficiency Sample Program
4. Submit test results from the laboratory within 10 business days of sample date

9-1.07B(8) Slurry Seal

The quantity of asphalt in slurry seals (Qss) is calculated by applying the formula in Section 9-1.07B(7) to the quantity of asphaltic emulsion used in producing the slurry seal mix.

9-1.07B(9) Modified Asphalt Binder

the quantity of asphalt in modified asphalt binder is calculated using the following formula:

$Qmab = MABTT \times [(100 - Xam) / 100]$

where:
Qmab = quantity in tons of asphalt used in modified asphalt binder
MABTT = modified asphalt binder, total tons placed
Xam = specified percentage of asphalt modifier

The quantity of extender oil is included in the quantity of asphalt.

9-1.07B(10) Other Materials

For materials containing asphalt not covered in sections 9-1.07B(1) through 9-1.07B(9), the Engineer determines the method for calculating the quantity of asphalt (*Qo*).

9-1.07C Payment Adjustments

Include payment adjustments for price index fluctuations in Applications for Payment. If material containing asphalt is placed within 2 months during 1 estimate period, calculate 2 separate adjustments. Each adjustment is calculated using the price index for the month in which the quantity of material containing asphalt subject to adjustment is placed in the work. The sum of the 2 adjustments is used for increasing or decreasing payment in the Application for Payment.

Calculate each payment adjustment using the following formula:

$PA = Qt \times A$

where:

PA = Payment adjustment in dollars for asphalt contained in materials placed in the work for a given month

Qt = Sum of all quantities of asphalt ($Qh + Qrh + Qmh + Qrap + Qtc + Qe + Qss + Qmab + Qo$)

A = Adjustment in dollars per ton of asphalt used to produce materials placed in the work rounded to the nearest $0.01

where:

$A = [(Iu / Ib) - 1.05] \times Ib \times [1 + (T / 100)]$ for an increase in the crude oil price index exceeding 5 percent

$A = [(Iu / Ib) - 0.95] \times Ib \times [1 + (T / 100)]$ for a decrease in the crude oil price index exceeding 5 percent

and:

Iu = California statewide crude oil price index for the month in which the quantity of asphalt subject to adjustment was placed in the work

Ib = California statewide crude oil price index for the month in which the Bid opening for the project occurred

T = Sales and use tax rate expressed as a percent currently in effect in the tax jurisdiction where the material is placed. If the tax rate information is not submitted timely, the statewide sales and use tax rate is used in the payment adjustment calculations until the tax rate information is submitted.

9-1.08–9-1.14 RESERVED

9-1.15 WORK-CHARACTER CHANGES

The County adjusts a bid item unit price based on the difference between the cost to perform the work as planned and the cost to perform the work as changed, if it meets the requirements of Section 4-1.05B. The Engineer determines the payment adjustment under Section 9-1.04. The County adjusts payment for only the work portion that changed in character.

9-1.16 PROGRESS PAYMENTS

9-1.16A Applications for Payment

9-1.16A(1) General

Based upon Applications for Payment submitted to the Engineer by the Contractor, the County shall make progress payments to the Contractor as provided below and elsewhere in the Contract Documents.

The pay period covered by each Application for Payment shall be one calendar month ending on the 20th day of the month.

The Contractor shall submit each Application for Payment to the Engineer by the last day of each month.

Pursuant to Section 9-1.02 above, Contractor's Applications for Payment shall be based on the actual installed quantities for payment.

Applications for Payment shall indicate the percentage of completion of each portion of the Work for which a lump sum price is specified as of the end of the period covered by the Application for Payment.

9-1.16A(2) Applications for Payment

Contractor shall submit to the Engineer an Application for Payment (on a form provided by the Engineer) for Work completed in accordance with the measurement of quantities. Such application shall be supported by such data substantiating the Contractor's right to payment as the Engineer may require.

By submitting an Application for Payment, the Contractor warrants that all Work has been performed in compliance with the Contract Documents, and that all quantities and amounts set forth therein accurately reflect the amount of Work completed during that pay period.

Each Application for Payment shall be reviewed by the Engineer as soon as practicable after receipt for the purpose of determining that the Application for Payment is a "proper" payment request, accurately reflecting the value of Work completed and submitted with the documents required by the Contract Documents. An Application for Payment shall be deemed "proper" only if it is properly completed and submitted on the proper forms. The Engineer shall have the right to adjust any estimate of quantity and to subsequently correct any error made in any Application for Payment.

The County shall make payment to the Contractor not later than thirty (30) calendar days after the Engineer's verification and approval that an Application for Payment is undisputed and properly submitted.

9-1.16A(3) Payments for Authorized Changes

Applications for Payment may include requests for payment on account of changes in the Work that have been properly authorized by Change Orders and by Construction Change Directives, which shall be itemized separately from base Contract Work.

9-1.16A(4) No Requests for Disputed Subcontractor Work

Applications for Payment shall not include requests for payment of amounts the Contractor does not intend to pay to a Subcontractor or material supplier because of a dispute or other reason, or as to which an appropriate stop payment notice release has not been filed.

9-1.16A(5) Improper Application for Payment

In accordance with Section 20104.50 of the California Public Contract Code, any Application for Payment determined by the Engineer not to be a proper payment request, suitable for payment, shall be returned to the Contractor as soon as practicable, but not later than seven (7) calendar days after receipt by the Engineer. An Application for Payment returned to the Contractor shall be accompanied by written documentation setting forth the reasons why the Application for Payment is not proper and not suitable for payment. If an Application for Payment is so returned as improper, no payment will be due the Contractor. The County reserves the right to make partial payment of undisputed amounts.

9-1.16A(6) Interest on Undisputed Amounts

If the County fails to make any progress payment within thirty (30) calendar days after receipt of an undisputed and proper Application for Payment from the Contractor, the County shall pay interest to the Contractor equivalent to the legal rate set forth in subdivision (a) of Section 685.010 of the California Code of Civil Procedure. The number of days available to the County to

make a payment without incurring interest shall be reduced by the number of days by which the Engineer exceeds the seven (7) day return requirement set forth above.

9-1.16A(7) Contractor Warranty of Project

The Contractor warrants that upon submittal of an Application for Payment, all Work for which payments have been received from the County shall, to the best of the Contractor's knowledge, information and belief, be free and clear of liens, claims, security interests, or encumbrances in favor of the Contractor, Subcontractors, material suppliers, or other persons or entities making a claim by reason of having provided labor, materials and equipment relating to the Work. This provision shall not relieve the Contractor from the responsibility for materials and Work upon which payments have been made, the restoration of damaged Work or as waiving the right of the County to require the fulfillment of the terms of the Contract.

Each time the Contractor submits an Application for Payment, the Contractor herby certifies that each Application for Payment is complete and accurate regarding the quantities and amounts stated in the application, and that all Work for which the Contractor seeks payment have been provided in a manner that meets or exceeds the Contract's requirements.

9-1.16B Schedule of Values

Section 9-1.16B applies to a lump sum bid item for which a schedule of values is specified to be submitted.

The sum of the amounts for the work units listed in the schedule of values must equal the lump sum price bid for the bid item.

Obtain authorization of a schedule of values before you perform work shown on the schedule. The County does not process a progress payment for the bid item without an authorized schedule of values.

Accept progress payments for overhead, profit, bond costs, and other fixed or administrative costs as distributed proportionally among the items listed except that for a contract with a bid item for mobilization, accept progress payments for bond costs as included in the mobilization bid item.

For changed quantities of the work units listed, the County adjusts payments in the same manner as specified for changed quantities of bid items under Section 9-1.06.

9-1.16C Materials On Hand

A material on hand but not incorporated into the work is not eligible for progress payment.

9-1.16D Mobilization

9-1.16D(1) General

Section 9-1.16D applies if a bid item for mobilization is shown on the Bid Item List.

Section 9-1.16D(2) applies unless the Contract includes a special provision for Section 9-1.16D(1) that specifies Section 9-1.16D(3) applies.

9-1.16D(2) Mobilization for Projects Except for Those Over Water Requiring Marine Access

The County makes partial payments for mobilization under Public Contract Code § 10264(a) except the amount of work completed does not include the amount earned for mobilization. The partial payment amount is reduced by a prorated amount bid in excess of the maximum allowed under Public Contract Code § 10264(a)(5).

The County pays the item total for mobilization in excess of the maximum allowed under Public Contract Code § 10264(a)(5) in the 1st payment after Contract acceptance.

9-1.16D(3) Mobilization for Projects Over Water Requiring Marine Access

The County makes partial payments for mobilization under Public Contract Code § 10264(b) except the amount of work completed does not include the amount earned for mobilization. The

partial payment amount is reduced by a prorated amount bid in excess of the maximum allowed under Public Contract Code § 10264(b)(6).

The County pays the item total for mobilization in excess of the maximum allowed under Public Contract Code § 10264(b)(6) in the 1st payment after Contract acceptance.

9-1.16E Withholds

9-1.16E(1) General

The County may withhold payment for noncompliance with the Contract Documents.

The County returns the noncompliance withhold in the progress payment following correction of noncompliance.

Withholds are not retainage under Public Contract Code § 7107.

Withholds are cumulative and independent of deductions.

Section 9-1.16B does not include all withholds that may be taken; the County may withhold other payments as authorized by the Contract Documents.

9-1.16E(2) Progress Withholds

The County withholds 10 percent of a progress payment for noncompliant progress. Noncompliant progress occurs when:

1. Total days to date exceed 75 percent of the working days; and
2. Percent of working days elapsed exceeds the percent of value of work completed by more than 15 percent

The Engineer determines the percent of working days elapsed by dividing the total days to date by the revised Contract working days and converting the quotient to a percentage.

The Engineer determines the percent of value of work completed by summing payments made to date and the amount due on the current progress estimate, dividing this sum by the current total estimated value of the work, and converting the quotient to a percentage. These amounts are shown on the Progress Payment Voucher.

When the percent of working days elapsed minus the percent of value of work completed is less than or equal to 15 percent, the County returns the withhold in the next progress payment.

9-1.16E(3) Performance Failure Withholds

During each estimate period you fail to comply with a Contract part, including submittal of a document as specified, the County withholds a part of the progress payment. The documents include QC plans, schedules, traffic control plans, and water pollution control submittals.

For 1 performance failure, the County withholds 25 percent of the progress payment but does not withhold more than 10 percent of the total bid.

For multiple performance failures, the County withholds 100 percent of the progress payment but does not withhold more than 10 percent of the total bid.

9-1.16E(4) Stop Payment Notice Withholds and Release Bonds

The County may withhold payments to cover claims filed under Civil Code § 9000 et seq.

Stop payment notice information may be obtained from County.

If at any time there shall be evidence of the existence, whether or not same has been asserted, of any mechanics lien, stop payment notice, or claim arising out of or in connection with the performance or default in performance of this Contract or any subcontract or supply contract entered into by Contractor to perform this Contract, and if the County might become liable for the discharge of or satisfaction of such mechanics lien, stop payment notice, or claim, then the County shall have the right to retain out of any payment then due or thereafter to become due, an

amount sufficient to discharge such mechanics lien or stop payment notice or satisfy such claim and to reimburse the County and the representatives of the County for all costs and expenses in connection therewith, including attorneys' fees. Further, the County, in its sole discretion, shall have the right to discharge or satisfy such mechanics lien, stop payment notice, or claim and pay all costs and expenses in connection therewith if the Contractor does not have such mechanics lien, stop payment notice, or claim discharged or satisfied within ten (10) days after receiving notice thereof from the County or unless some other procedure for discharge or satisfaction of such lien or claim is agreed upon between the County and Contractor. If the amounts retained are insufficient for the aforesaid purposes, or if such mechanics lien, stop payment notice, or claim remains undischarged or unsatisfied after all payments have been made to the Contractor, then the Contractor shall refund to the County all monies that may have been paid to discharge such lien or stop payment notice or satisfy such claims, including the costs, expenses, and attorneys' fees in connection therewith.

If the Contractor or a Subcontractor disputes the correctness or validity or enforceability of any stop payment notice, the County may, in its discretion, permit the Contractor to file with the County a bond, on a form provided by the County, executed by one or more corporate California admitted surety insurers, in an amount equal to one hundred and twenty-five percent (125%) of the claim stated in the stop payment notice conditioned for the payment of any sum which the stop payment notice claimant may recover on the claim together with its costs of suit in the action. Upon the County's acceptance of such bond, the County shall not withhold money from the Contractor on account of the stop payment notice. The surety(ies) upon the stop payment notice release bond shall be different than, and jointly and severally liable to the stop payment notice claimant with, the payment bond surety(ies).

If a Subcontractor or material supplier refuses to furnish a release or waiver required by the County, records a mechanics lien, or files a stop payment notice, the Contractor shall, upon the County's request, furnish a bond satisfactory to the County to release the stop payment notice and shall otherwise fully indemnify the County against such stop payment notice and the County shall enforce its right under the preceding paragraph.

Any lien, stop payment notice, or other claim, filed or asserted after the Contractor's acceptance of the Final Payment, by any Subcontractor, laborer, material supplier, or others, in connection with or for Work performed under the Contract Documents shall be the sole and exclusive responsibility of the Contractor, who further agrees to indemnify, defend. and hold harmless the County and its board members, officers, agents and employees from and against any claims, demands, or judgment arising out of or associated therewith, including, without limitation, attorneys' fees incurred by the County in connection therewith.

9-1.16E(5) Penalty Withholds

Penalties include fines and damages that are proposed, assessed, or levied against you or the County by a governmental agency or private lawsuit. Penalties are also payments made or costs incurred in settling alleged violations of federal, state, or local laws, regulations, requirements, or PLACs. The cost incurred may include the amount spent for mitigation or correcting a violation.

If the County is assessed a penalty, the County may withhold the penalty amount until the penalty disposition has been resolved. The County may withhold penalty amounts without notifying you.

Instead of the withhold, you may provide a bond equal to the highest estimated liability for any disputed penalties proposed except you may not provide a bond for withholds related to labor compliance violations.

9-1.16E(6)–9-1.16E(10) Reserved

9-1.16F Retentions

The County will withhold 5 percent of all progress payments as retention (Public Contract Code § 7201). Unless otherwise required under applicable law, retention will be paid to you on the Final Payment.

The County will hold retainage from the prime contractor and will make prompt and regular incremental acceptances of portions, as determined by the County, of the contract work, and pay

retainage to the prime contractor based on these acceptances. The prime contractor, or subcontractor, must return all monies withheld in retention from a subcontractor within 30 days after receiving payment for work satisfactorily completed and accepted including incremental acceptances of portions of the contract work by the agency. Federal law (49 CFR 26.29) requires that any delay or postponement of payment over 30 days may take place only for good cause and with the County's prior written approval. Any violation of this provision subjects the violating prime contractor or subcontractor to the penalties, sanctions and other remedies specified in Section 7108.5 of the Business and Professions Code. These requirements must not be construed to limit or impair any contractual, administrative, or judicial remedies otherwise available to the prime contractor or subcontractor in the event of a dispute involving late payment or nonpayment by the prime contractor, deficient subcontract performance, or noncompliance by a subcontractor.

This contract is subject to the provisions of California Public Contract Code § 22300, a portion of which provides as follows:

> Any Contractor who elects to receive interest on moneys withheld in retention by a public agency shall, at the request of any Subcontractor, make that option available to the Subcontractor regarding any moneys withheld in retention by the Contractor from the Subcontractor. If the Contractor elects to receive any interest on any moneys by the Contractor on any retention moneys withheld from the Subcontractor by the Contractor, less any actual pro rata costs associated with administering and calculating that interest. In the event that the interest rate is a fluctuating rate, the rate for the Subcontractor shall be determined by calculating the interest rate paid during the time that retentions were withheld from the Subcontractor. If the Contractor elects to substitute securities in lieu of retention, then, by mutual consent of the Contractor and Subcontractor, the Subcontractor may substitute securities in exchange for the release of moneys held in retention by the Contractor.
>
> This subdivision shall apply only to those Subcontractors performing more than five percent of the Contractor's total Bid.
>
> No Contractor shall require any Subcontractor to waive any provision of this Section.

You will have the right to substitute securities for the retention under Public Contract Code § 22300. No substitution will be accepted until:

1. the County approves the securities and their value,
2. the parties have entered into an escrow agreement (if the securities are to be held in escrow) in a form substantially similar to that under Public Contract Code § 22300,
3. all documentation necessary for assignment of the securities to the County or to the escrow agent, are delivered in a form satisfactory to the County.

You may request the County make payment of retention earned directly to the escrow agent under subdivision (b) of Public Contract Code § 22300. The following conditions apply to the deposit of securities into escrow:

1. You will bear the cost of the County and escrow agent (either the County or the bank) in connection with the deposit.
2. Securities or certificates of deposits placed in escrow must be equivalent in value to the amount of retention to be paid you.
3. The value of the securities placed in escrow must be based on the market value of such securities as of the date the securities are deposited in escrow, and not on the face value of the securities. Such securities must be valued by the County, whose decision on valuation is final.
4. The escrow agreement must provide that the escrow agent will convert the securities deposited for cash, whole or in part, to meet the defaults by you upon unilateral demand for such conversion by the Public Works Director, and any amount so demanded must be paid to the County upon unilateral demand for payment.

5. You must be the beneficial owner of the securities substituted for moneys withheld and must receive any interest.
6. You must enter into an escrow agreement satisfactory to the County and substantially similar to Public Contract Code §22300. You must obtain in writing consent of the surety to such agreement. The Public Works Director is authorized to sign such escrow agreements on behalf of the County.

9-1.16G Release of Retention

This Contract is subject to the following provisions of California Public Contract Code § 7107 which provides as follows:

(a)(1) This section shall apply with respect to all Contracts entered into on or after January 1, 1999, between a public entity and an original Contractor, between an original Contractor and a Subcontractor, and between all Subcontractors thereunder, relating to the construction of any public Work of improvement.

(2) For purposes of this Section, "public entity" means the state, including every state agency, office, department, division, bureau, board, or commission, a city, county, city and county, including chartered cities and chartered counties, district, special district, public authority, political subdivision, public corporation, or nonprofit transit corporation wholly owned by a public agency and formed to carry out the purposes of the public agency.

(b) In a Contract between the original Contractor and a Subcontractor, and in a Contract between a Subcontractor and any Subcontractor thereunder, the percentage of the retention proceeds withheld may not exceed the percentage specified in the Contract between the public entity and the original Contractor.

(c) When a performance and payment bond is required in the solicitation for bids, subdivision 9.11.2.3 shall not apply to either of the following:

(1) The original Contractor, if the Subcontractor fails or refuses to provide a performance and payment bond issued by an admitted surety insurer, to the original Contractor.

(2) The Subcontractor, if a Subcontractor thereunder fails or refuses to provide a performance and payment bond issued by an admitted surety insurer, to the Subcontractor.

(d) No party identified in subdivision (b) shall require any other party to waive any provision of this Section.

(e) In the event that the Contractor elects to substitute securities in lieu of retentions, the Contractor may withhold from its Subcontractors, who have not elected to substitute securities in lieu of retentions, the amount of retentions that would have otherwise been withheld.

9-1.16H Payments to Subcontractors

The Contractor shall pay each Subcontractor, no later than seven (7) calendar days after receipt of payment from the County the amount to which the Subcontractor is entitled, reflecting percentages actually retained from payments to the Contractor on account of the Subcontractor's portion of the Work. The Contractor shall, by appropriate agreement with each Subcontractor, require each Subcontractor to make payments to their subcontractors in a similar manner. Contractor shall obtain and submit releases on County-approved forms for any payment made to Subcontractors (of any tier) and suppliers.

9-1.16I County's Right to Disburse Progress and Final Payments by Joint Check

The County has the right to request written evidence from the Contractor that the Contractor has properly paid Subcontractors and material and equipment suppliers amounts paid by the County to the Contractor for subcontracted Work. If the Contractor fails to furnish such evidence within seven (7) days, the County shall have the right to contact Subcontractors to ascertain whether they have been properly paid. The County shall not have an obligation to pay or to see to the payment of money to a Subcontractor, except as may otherwise be required by law. The County may, in its sole discretion, issue joint checks to the Contractor and its Subcontractors and

material suppliers in satisfaction of County's obligation to make progress payments or the final payment due hereunder.

9-1.16J–9-1.16M Reserved

9-1.17 FINAL PAYMENT

9-1.17A Final Inspection

Upon completion of the Work, the Contractor shall submit written notice that the Work is ready for final inspection and acceptance.

9-1.17B Final Completion and Final Payment

9-1.17B(1) Affidavit of Final Completion and Final Payment

The Contractor shall, upon completion of the Work and final cleaning up, submit to the County a sworn Affidavit of Final Completion on a form provided by the Engineer. Properly submitted Claims in stated amounts may be excluded by the Contractor from the operation of the release if the Claims have not yet been resolved. Within thirty (30) calendar days after receipt of the Affidavit of Completion, the Engineer will inspect the Work and will either (1) reject the requested Affidavit of Final Completion, specifying the defective and/or uncompleted portions of the Work, or (2) accept the Affidavit of Final Completion and submit a request to the County Board of Supervisors for final acceptance of the Work.

9-1.17B(2) Rejection and Revision

If the County rejects the Affidavit of Final Completion, specifying defective and/or uncompleted portions of the Work, the Contractor shall promptly remedy the defective and/or uncompleted portions of the Work. Thereafter, the Contractor shall give the County a revised Affidavit of Final Completion with a new date based on when the defective and/or uncompleted portions of the Work were corrected. The foregoing procedure shall apply successively thereafter until the County accepts Contractor's Affidavit of Final Completion.

9-1.17B(3) Documentation

In addition to the requirements for Final Payment set forth in the other Contract Documents, the Final Payment shall not become due until at least thirty (30) calendar days after: (i) Contractor has fully performed the Contract, including all punch list work; and (ii) Contractor has submitted to the County:

1. A full, complete and proper Final Application for Payment showing the proposed total amount due the Contractor, segregated as to Contract quantities, changes in the Work, and other basis for payments; deductions made or to be made for prior payments; amounts to be retained; any Claims the Contractor intends to file at that time or a statement that no Claims will be filed; and any unsettled Claims, stating amounts;
2. Written consent of surety(ies) to Final Payment;
3. Contractor's written assurance that identified corrective work not complete and accepted will be completed by a stated date agreeable to the County;
4. The required As-Built Drawings (in reproducible format);
5. Reasonable proof that taxes, fees and similar obligations of Contractor have been paid;
6. Documentation that Contractor has inspected, tested, and adjusted performance of every system or facility of the Work to ensure that overall performance is in compliance with terms of the Contract Documents;
7. Reasonable proof that Contractor has discontinued and removed temporary facilities and services from the Site, along with construction tools and facilities, forms, and similar items except for Contractor's field office;
8. Reasonable proof that Contractor has provided instruction for the County's operating personnel on systems and equipment operational requirements;

9. A report on performance of completed installations after adjustment that appear unable to comply with the requirements of the Contract Documents;

10. The operating manuals for operating and maintaining the Work; and

11. Four (4) copies of all warranties from vendors and Subcontractors, operation and maintenance manuals, instructions and related agreements, equipment certifications and similar documents, and maintenance and operating instructions.

The Engineer reserves the right to not require any of the above submittals which the Engineer determines, in his/her sole discretion, is not applicable to a particular project.

9-1.17B(4) Disbursement of Final Payment

Pursuant to California Public Contract Code section 7107, if there is any dispute between the County and the Contractor at the time that disbursement of the Final Payment is due, the County may withhold from disbursement of the Final Payment an amount not to exceed one hundred fifty percent (150%) of the amount in dispute.

9-1.17B(5) No Waiver of Claims by County

The making of Final Payment shall not constitute a waiver of any Claims by the County including, but not limited to:

1. unsettled stop payment notices;

2. faulty or defective Work;

3. failure of the Work to comply with the requirements of the Contract Documents;

4. terms of special warranties required by the Contract Documents; or

5. any other cause, unless specifically waived by the County in writing.

9-1.17B(6) Waiver of Claims by Contractor, Subcontractors, and Suppliers

Acceptance of final payment by the Contractor, a Subcontractor, or a material supplier shall constitute a waiver of claims by that payee except those previously made in writing and identified by that payee as unsettled at the time of final Application for Payment.

PAGE LEFT BLANK INTENTIONALLY

COUNTY OF SAN LUIS OBISPO

DEPARTMENT OF PUBLIC WORKS AND TRANSPORTATION

TECHNICAL PROVISIONS

FOR

TAR SPRING CREEK BRIDGE ON BRANCH MILL ROAD

CONTRACT NO. 300385

FEDERAL AID PROJECT NO. BRLO-5949(116)

PAGE LEFT BLANK INTENTIONALLY

STANDARD SPECIFICATIONS

Complete the Contract Work under the California Department of Transportation Standard Specifications dated 2010. Division I of the Standard Specification is superseded by the County General Conditions.

Revised Standard Specification are incorporated into the Contract and included as an appendix to these Contract Documents.

PAGE LEFT BLANK INTENTIONALLY

STANDARD PLANS

The Standard Plans applicable to this Contract include those listed below. The applicable Revised Standard Plans (RSPs) listed below are included as an appendix to these Contract Documents.

	ABBREVIATIONS, LINES, SYMBOLS AND LEGEND
A10A	**Abbreviations (Sheet 1 of 2)**
RSP A10B	**Abbreviations (Sheet 2 of 2)**
A10C	**Lines and Symbols (Sheet 1 of 3)**
A10D	**Lines and Symbols (Sheet 2 of 3)**
A10E	**Lines and Symbols (Sheet 3 of 3)**
	PAVEMENT MARKERS, TRAFFIC LINES, AND PAVEMENT MARKINGS
A20A	**Pavement Markers and Traffic Lines, Typical Details**
	EXCAVATION AND BACKFILL
A62A	**Excavation and Backfill - Miscellaneous Details**
A62C	**Limits of Payment for Excavation and Backfill - Bridge**
	OBJECT MARKERS, DELINEATORS, CHANNELIZERS AND BARRICADES
A73A	**Object Markers**
A73B	**Markers**
A73C	**Delineators, Channelizers and Barricades**
	MIDWEST GUARDRAIL SYSTEM STANDARD RAILING SECTIONS
RSP A77L1	**Midwest Guardrail System Standard Railing Section (Wood Post with Wood Block)**
RSP A77M1	**Midwest Guardrail System Standard Hardware**
RSP A77N1	**Midwest Guardrail System Wood Post and Wood Block Details**
RSP A77N4	**Midwest Guardrail System Typical Railing Delineation and Dike Positioning Details**
	MIDWEST GUARDRAIL SYSTEM TYPICAL LAYOUTS FOR STRUCTURES
RSP A77Q1	**Midwest Guardrail System Typical Layouts for Structure Approach**
RSP A77Q4	**Midwest Guardrail System Typical Layouts for Structure Departure**
	MIDWEST GUARDRAIL SYSTEM CONNECTION DETAILS AND TRANSITION RAILING TO BRIDGE RAILINGS, ABUTMENTS AND WALLS
RSP A77U1	**Midwest Guardrail System Connections to Bridge Railings without Sidewalks Details No. 1**
RSP A77U2	**Midwest Guardrail System Connections to Bridge Railings without Sidewalks Details No. 2**
RSP A77U4	**Midwest Guardrail System Transition Railing (Type WB-31)**
	FENCES
A86	**Barbed Wire and Wire Mesh Fences**
A86A	**Barbed Wire and Wire Mesh Fence Detail on Sharp Break in Grade**
A86B	**Barbed Wire and Wire Mesh Fence Details**
A86C	**Barbed Wire and Wire Mesh Fence Details at Ditch Crossing**
RSP A86D	**Barbed Wire and Wire Mesh Fence - Miscellaneous Details**
	CURBS, DRIVEWAYS, DIKES, CURB RAMPS AND ACCESSIBLE PARKING
RSP A87B	**Hot Mix Asphalt Dikes**
	PIPE DOWNDRAINS, ANCHORAGE SYSTEMS AND OVERSIDE DRAINS
D87D	**Overside Drains**
	TEMPORARY CRASH CUSHIONS, RAILING AND TRAFFIC SCREEN
T1A	**Temporary Crash Cushion, Sand Filled (Unidirectional)**

T1B	**Temporary Crash Cushion, Sand Filled (Bidirectional)**
T2	**Temporary Crash Cushion, Sand Filled (Shoulder Installations)**
T3A	**Temporary Railing (Type K)**
T3B	**Temporary Railing (Type K)**
	TEMPORARY WATER POLLUTION CONTROL
T51	**Temporary Water Pollution Control Details (Temporary Silt Fence)**
T56	**Temporary Water Pollution Control Details (Temporary Fiber Roll)**
T58	**Temporary Water Pollution Control Details (Temporary Construction Entrance)**
T59	**Temporary Water Pollution Control Details (Temporary Concrete Washout Facility)**
T65	**Temporary Water Pollution Control Details [Temporary Fence (Type ESA)]**
	BRIDGE DETAILS
B0-1	**Bridge Details**
B0-5	**Bridge Details**
B0-13	**Bridge Details**
	PILES
B2-8	**Pile Details - Class 200**
	T-BEAM DETAILS
B6-10	**Utility Openings, T-Beam**
	JOINT SEALS
B6-21	**Joint Seals (Maximum Movement Rating = 2")**
	BOX GIRDER DETAILS
B7-1	**Box Girder Details**
	BRIDGE CONCRETE BARRIERS
RSP B11-55	**Concrete Barrier Type 732**
	ROADSIDE SIGNS
RS1	**Roadside Signs, Typical Installation Details No. 1**
RS2	**Roadside Signs - Wood Post, Typical Installation Details No. 2**
	OVERHEAD AND ROADSIDE SIGNS PANELS
S94	**Roadside Framed Single Sheet Aluminum Signs, Rectangular Shape**

SPECIAL PROVISIONS

DIVISION I GENERAL CONDITIONS

1 GENERAL

Add to section 1-1.01:

1.01I Bid Items and Applicable Sections

Item code	Item description	Applicable section
066018	CONSTRUCTION JOB SITE TRAILER/OFFICE	10
130400	TEMPORARY CREEK DIVERSION SYSTEM	10

^^

5 CONTROL OF WORK

Replace “Reserved” section 5-1.20D with:

5-1.20D Relations with Department of Water Resources

An encroachment permit has been issued to the County by the Department of Water Resources (DWR) for work within DWR’s right of way and is included as an appendix to these Contract Documents. You must be fully informed of and comply with the requirements of this encroachment permit as well as rules, regulations, and conditions that may govern your activities within the DWR’s right-of-way and should conduct the work accordingly.

The following conditions apply:

1. Do not disturb DWR’s ongoing operations and maintenance activities.
2. Do not store or place construction equipment or materials within DWR’s right of way.
3. All waste material and debris must be removed from DWR’s right of way.
4. Any excavation required for the temporary bridge abutments within DWR’s right of way must not be closer than 8 feet to any DWR facility.

An inspector from the DWR and the CCWA (Central Coastal Water Authority) must be present during construction activities within the DWR’s right of way at all times.

Provide seven (7) days notice before working within the DWR easement to:

1. Angelica Aguilar at The Department of Water Resources, Division of Engineering, Real Estate Branch at (800) 600-4397
2. The Department of Water Resources, San Joaquin Field Division at (661) 858-5513
3. Central Coastal Water Authority at (805) 697-5235
4. Pearblossom Project Headquarters at (661) 944-8513

Add section 5-1.20G:

5-1.20G Relations with City of Arroyo Grande

You must obtain an encroachment permit form the City of Arroyo Grande for work within their right of way. You must be fully informed of and comply with the requirements of this encroachment permit.

Contact the City for an application:

City Hall
300 E. Branch St.
Arroyo Grande, CA 93420
Ph: 805-473-5400

This permit is at no cost to you.

Add to section 5-1.36D:

The utilities shown in the following table will not be rearranged. The utilities may interfere with pile driving, drilling activities, girder erection, or substructure construction.

Utilities Not Rearranged for Pile Driving, Drilling Activities, Girder Erection or Substructure Construction

Utility	Location
PG&E Overhead	Across Branch Mill Road

You must stay at least 20' from the conductor and electrical lines at all times.

All clearances must comply with any applicable orders of the Public Utilities Commission of the State of California.

You must locate and expose by potholing the fiber optic line(s) within the CCWA easement within the presence of a Department of Water Resources representative of the San Joaquin field division. All excavation within three (3) feet (vertically and horizontally) of the fiber optic line must be done using hand-held tools only.

^^

6 CONTROL OF MATERIALS

Add to section 6-2.03:

The County furnishes you with:

- Brass caps for survey monuments

^^

DIVISION II GENERAL CONSTRUCTION

10 GENERAL

Add to section 10-1.02:

When temporary access road is no longer needed remove items involved and restore the ground to its original condition and grade.

The temporary bridge and road must be installed prior to closing Branch Mill Road.

The temporary creek diversion system must be installed prior to demolition of the existing bridge .

Replace "Reserved" in section 10-1.03 of the RSS for section 10-1 with:

No construction activities shall be conducted below top of creek banks during rain events or between November 1st – May 30th.

Work below top of creek banks is allowed during the time period between October 1st and October 31st under the following conditions:

1. Do not conduct construction activities on any day for which the National Weather Service has predicted a 25% or more chance of at least 0.1 inch rain in 24 hours.
2. In preparation for any such predicted rain event you must install effective erosion control, sediment control, and other protective measures no later than the day prior to the predicted rain event.
3. Construction activities below top of creek banks may resume after the rain has ceased, the National Weather Service predicts clear weather, and site conditions are dry enough to continue work without discharge of sediment or other pollutants from the project site.

Temporary creek diversion system and the temporary bridge must be completely removed by October 31st. Temporary creek diversion system and temporary bridge are only paid for once regardless of the number of times installed, relocated, or removed.

This project qualifies for an Erosivity Waiver because the soil disturbance is anticipated to be between 1 and 5 acres, and the R-factor is less than 5 based on a June 1 through October 30 construction window. The Erosivity Waiver and R-factor are described in the NPDES General Permit for Storm Water Discharges Associated with Construction and Land Disturbance Activities (Order No. 2009-0009-DWQ, NPDES No. CAS000002).

Failure to comply with this construction window will mandate that a Notice of Intention for a Storm Water Pollution Prevention Plan be initiated before the deadline passes and that the Contractor obtain a WDID number via the Engineer to continue work. The Contractor shall bear all expenses for compliance of the Construction General Permit outside the aforementioned construction window.

Replace “Reserved” in section 10-3 with:

10-3 TEMPORARY CREEK DIVERSION

10-3.01 GENERAL

10-3.01A Summary

Section 10-3 includes specifications for constructing, maintaining, and later removing a temporary creek diversion system as described.

Comply with "Water Pollution Control" and "Job Site Management" and all Permits, Licenses, Agreements, or Certifications (PLACs).

Work within the Tar Spring Creek is restricted to June 1 thru October 31. If the work is not completed within one restricted period, the creek diversion system shall be removed by the conclusion of the restricted period and repositioned during the following restricted period.

Temporary creek diversion system will be one of the water pollution control practices for non-storm water management control.

10-3.01B Submittals

Submit a Certificate of Compliance under Section 6-3.05E of the General Conditions for:

1. Permeable Material (River Run Gravel)
2. Gravel-filled Bags
3. Impermeable Plastic Sheet
4. Pump Discharge Line
5. Pump System

You may use an alternative temporary creek diversion system if approved by the Engineer in writing, subject to review and approval by the Regional Water Quality Control Board. The alternative temporary creek diversion system will be subject to submittal, review, and approval by the Regional Water Quality

Control Board. Any increase in cost for the alternative temporary creek diversion system will be at your expense. The alternative temporary creek diversion system must be installed and maintained in conformance with these Special Provisions.

10-3.02 MATERIALS

Gravel-filled Bags

Gravel-filled bag fabric must be nonwoven polypropylene geotextile or comparable polymer material and shall comply with the following requirements:

Specification	Requirements
Weight per unit area, ounces per square yard, minimum ASTM Designation: D 5261	8.0
Grab tensile strength (one inch grip), pounds, minimum ASTM Designation: D 4632*	200
Ultraviolet stability, percent tensile strength retained after 500 hours minimum ASTM Designation: D 4355, xenon arc lamp method	70

Gravel-filled bags must be between 24 inches and 32 inches in length, and between 16 inches and 20 inches in width.

Yarn used for binding gravel bags must be as recommended by the manufacturer or bag supplier and must be of a contrasting color.

Gravel must be between 3/8 inch and 3/4 inch in diameter, and must be clean and free from clay balls, organic matter, and other deleterious materials. The opening of gravel-filled bags must be secured to prevent gravel from escaping. Gravel-filled bags must be between 30 pounds and 50 pounds in weight.

Impermeable Plastic Sheet

Impermeable plastic sheet must be single ply, new polyethylene sheeting, a minimum of 10 mils thick, conforming to ASTM D 5199 and must be free of holes, punctures, tears, or other defects that compromise the impermeability of the material.

All joints between the edges of the impermeable plastic sheets must be lapped with a minimum 4-inch lapping at the edges and joined with commercial quality waterproof tape.

Flexible Plastic Pipe

Flexible plastic pipe must comply with Section 64 for Type C and Type S corrugated polyethylene pipe.

At your option, an alternative culvert may be used. The culverts must be capable of sustaining the intended load and of discharging a quantity of water equivalent to the type and size of flexible plastic pipe shown. Adequacy as to equivalent strength and capacity must be subject to approval, in writing, by the Engineer.

Temporary Geotextile Fabric

Temporary Geotextile fabric must comply with rock slope protection fabric in Section 72-2.

Cellular Confinement System

Cellular Confinement System must be made of high-density polyethylene (HDPE) with a load-bearing capacity of 60 tons or greater and comply with the following requirements:

Specification	Requirements
Polymer Density, minimum ASTM Designation: D 1505	0.94 g/cc
Sheet Gauge, minimum ASTM Designation: D 5199	46 mil (1.15 mm)

10-3.03 CONSTRUCTION

Installation

Temporary creek diversion system must be constructed by placing gravel-filled bags and impermeable plastic sheet around flexible plastic pipe as shown. All joints between the impermeable plastic sheet and the flexible plastic pipe must be sealed with commercial quality waterproof tape. Use of the temporary creek diversion system is restricted to the period from June 1 to October 31.

The invert elevation of the culverts must be installed on the natural streambed grade at both ends and matching the slope of the culverts to the streambed slope as shown. Impervious plastic sheeting must be placed on the streambed and stream banks before placement of the pipe culverts and upstream diversion dam. The impervious plastic sheeting will then be wrapped over the diversion dam to help prevent stream water from soaking through the gravel bags.

Installation must not be initiated before June 1 or if the 72-hour weather forecasts predict a 25 percent or greater chance of rain in the project area.

No motorized equipment is allowed within the active creek for the construction of the temporary creek diversion system.

Prevent at your own–expense, any leakage in the temporary creek diversion system that may interfere with the work. If during the progress of the work, it becomes necessary to reposition or relocate portions of the temporary creek diversion system, the work must be done at your expense and with the Engineer's approval for the location.

Those areas between temporary cofferdams used by the Contractor must utilize permeable material placed within a cellular confinement system on top of temporary geotextile fabric.

Maintenance

Temporary creek diversion system must be maintained to provide adequate holding capacity with a minimum freeboard of 12 inches above the primary diversion dam. Holes, rips, and voids in the impermeable plastic sheet must be patched and repaired by taping or the impermeable plastic sheet must be replaced. Impermeable plastic sheet must be replaced when patches or repairs compromise the impermeability of the material as determined by the Engineer.

Temporary creek diversion system must be repaired or replaced on the same day when the damage occurs. Damage to the temporary creek diversion system resulting from the Contractor’s vehicles, equipment, or operations shall be repaired at your own expense.

If during the progress of the work it becomes necessary to reposition or relocate portions of the temporary creek diversion system, the work shall be done at your own expense.

Removal

When no longer required as determined by the Engineer, all components of temporary creek diversion system must be removed by hand and disposed of.

Ground disturbance, including holes and depressions caused by the installation and removal of the temporary creek diversion system must be backfilled with creek bed material and repaired under Section 5-1.36 of the General Conditions.

10-3.04 PAYMENT

The County does not adjust payment for an increase or decrease in the quantity of temporary creek diversion systems. Section 9-1.06 of the General Conditions does not apply.

Replace "Reserved" in section 10-7 with:

10-7 CONSTRUCTION JOB SITE TRAILER/OFFICE

10-7.01 GENERAL

Section 10-7 includes specifications for pickup, delivery, installation, maintenance, return of a field office and associated services for the exclusive use of the Engineer.

You will pick up the field office trailer, and return it upon completion of the contract, at the County of San Luis Obispo's Corporation Yard, located at Kansas Avenue and State Highway 1. You must perform all site work necessary to set up the field office including providing and connection of site utilities. Site plan and location are subject to Engineers approval.

It will be your responsibility to obtain any required permits for the delivery of the office trailer on the public roads.

The field office installation must be safe, sanitary and include the appropriate electrical service, communication services, potable water supply, toilet accommodations and waste disposal services. You will pay utility bills (electricity, water and waste disposal) promptly. Provide local and long distance telephone services as specified. Provide high-speed internet connection (DSL or cable). The County will pay the cost of the telephone service, all project related telephone calls, and the internet service. You will pay the cost for all connection and disconnection fees for electricity, phone, internet, and water service, as applies. Comply with all applicable ordinances, safety codes, and regulations.

You must supply a field office with the following minimum requirements:

1. Adequate electrical service (120/240 volt, 60 cycle,)
2. Telephone and Internet Services
3. Adequate potable water supply
4. Parking for 3 vehicles

The field office must be reasonably secure, and if determined necessary by the Engineer, be enclosed by a 6 foot high chain link fence with a gate around the building and parking area. You must provide a restroom facility within 150 feet of the field office, for use by the Engineer or office personnel.

^^

12 TEMPORARY TRAFFIC CONTROL

Replace the 2nd paragraph of section 12-4.01 with:

Branch Mill Road will be closed and traffic detoured during construction. Maintain access to temporary access road and bridge for emergency vehicles and local farmers at all times.

Replace section 12-8 with:

12-8 TEMPORARY PAVEMENT DELINEATION

12-8.01 GENERAL

Section 12-8 includes specifications for placing, applying, maintaining, and removing temporary pavement delineation.

Painted traffic stripe used for temporary delineation must comply with section 84-3. Apply 1 or 2 coats.

Temporary signing for no–passing zones must comply with section 12-3.06.

12-8.02 MATERIALS

12-8.02A General

Not Used

12-8.02B Temporary Lane Line and Centerline Delineation

Temporary pavement markers must be the same color as the lane line or centerline markers being replaced. Temporary pavement markers must be one of the temporary pavement markers on the Authorized Material List for short-term day or night use, 14 days or less, or long-term day or night use, 180 days or less.

12-8.02C Temporary Edge Line Delineation

Temporary, removable, construction-grade striping and pavement marking tape must be one of the types on the Authorized Material List. Apply temporary, removable, construction-grade striping and pavement marking tape under the manufacturer's instructions.

12-8.03 CONSTRUCTION

12-8.03A General

Whenever work activities obliterate pavement delineation, place temporary or permanent pavement delineation before opening the traveled way to traffic. Place lane line and centerline pavement delineation for traveled ways open to traffic. On multilane roadways, freeways, and expressways, place edge line delineation for traveled ways open to traffic.

Establish the alignment for temporary pavement delineation, including required lines or markers. Surfaces to receive an application of paint or removable traffic tape must be dry and free of dirt and loose material. Do not apply temporary pavement delineation over existing pavement delineation or other temporary pavement delineation. Maintain temporary pavement delineation until it is superseded or you replace it with a new striping detail of temporary pavement delineation or permanent pavement delineation.

Place temporary pavement delineation on or adjacent to lanes open to traffic for a maximum of 14 days. Before the end of the 14 days, place the permanent pavement delineation. If the permanent pavement delineation is not placed within the 14 days, replace the temporary pavement markers with additional temporary pavement delineation equivalent to the striping detail specified for the permanent pavement delineation for the area. The County does not pay for the additional temporary pavement delineation.

When the Engineer determines the temporary pavement delineation is no longer required for the direction of traffic, remove the markers, underlying adhesive, and removable traffic tape from the final layer of surfacing and from the existing pavement to remain in place. Remove temporary pavement delineation that conflicts with any subsequent or new traffic pattern for the area.

12-8.03B Temporary Lane Line and Centerline Delineation

Whenever lane lines or centerlines are obliterated, the minimum lane line and centerline delineation must consist of temporary pavement markers placed longitudinally at intervals not exceeding 24 feet. The temporary pavement markers must be temporary pavement markers on the Authorized Material List for short-term day or night use, 14 days or less, or long-term day or night use, 180 days or less. Place temporary pavement markers under the manufacturer's instructions. Cement the markers to the surfacing with the adhesive recommended by the manufacturer, except do not use epoxy adhesive to place pavement markers in areas where removal of the markers will be required.

For temporary lane line or centerline delineation consisting entirely of temporary pavement markers, place the markers longitudinally at intervals not exceeding 24 feet.

Where no-passing centerline pavement delineation is obliterated, install the following temporary no-passing zone signs before opening lanes to traffic. Install a W20-1, "Road Work Ahead," sign from 1,000 feet to 2,000 feet in advance of a no-passing zone. Install a R4-1, "Do Not Pass," sign at the beginning of a no-passing zone and at 2,000-foot intervals within the no-passing zone. For continuous zones longer than 2 miles, install a W7-3a or W71(CA), "Next ___ Miles," sign beneath the W20-1 sign. Install a R4-2, "Pass With Care," sign at the end of the no-passing zone. The Engineer determines the exact location of temporary no-passing zone signs. Maintain the temporary no-passing zone signs in place until you place the permanent no-passing centerline pavement delineation. Remove the temporary no-passing zone signs when the Engineer determines they are no longer required for the direction of traffic.

12-8.03C Temporary Edge Line Delineation

Not Used

12-8.04 PAYMENT

Not Used

^^

13 WATER POLLUTION CONTROL

Replace the paragraph added to section 13-1.01A by the RSS with:

Comply with National Pollutant Discharge Elimination System (NPDES) General Permit for Storm Water Discharges Associated with Construction and Land Disturbance Activities (Order No. 2009-0009-DWQ, NPDES No. CAS000002) referred to herein as "Permit" as well as all other project permit conditions which are required in addition to the Permit requirements. The project permits require more stringent monitoring frequencies, additional BMPs, and increased maintenance of project BMPs. Manage work activities to reduce the discharge of pollutants to surface waters, groundwater, or municipal separate storm sewer systems.

Add to section 13-2.01A:

This project qualifies for an Erosivity Waiver because the soil disturbance is anticipated to be between 1 and 5 acres, and the R-factor is less than 5 based on a June 1 through October 30 construction window. The Erosivity Waiver and R-factor are described in the NPDES General Permit for Storm Water Discharges Associated with Construction and Land Disturbance Activities (Order No. 2009-0009-DWQ, NPDES No. CAS000002).

Failure to comply with this construction window will mandate that a Notice of Intention for a Storm Water Pollution Prevention Plan be initiated before the deadline passes and that the Contractor obtain a WDID number via the Engineer to continue work. The Contractor shall bear all expenses for compliance of the Construction General Permit outside the aforementioned construction window.

Replace the 1st paragraph in section 13-2.01B of the RSS with:

Within ten (10) business days of receipt of the fully executed contract, submit 2 copies of your WPCP for review. Allow five (5) business days for review.

After the Engineer authorizes the WPCP, submit an electronic copy and 3 printed copies of the authorized WPCP.

Replace the section 13-2.04 with:

13-2.04 PAYMENT

The County pays you for water pollution control program as follows:

1. After the Engineer authorizes the WPCP, the County includes up to 10 percent of the bid item price in the monthly progress payment.
2. The County pays 80 percent of the bid item price over the life of the contract
3. After contract acceptance, the County pays for the remaining 10 percent of the bid item.

Replace the 1st paragraph in section 13-5.04 with:

Payment for all temporary soil stabilization items is included in the payment for water pollution control program.

Replace the 1st and 2nd paragraph in section 13-6.04 with:

Payment for all temporary sediment control items is included in the payment for water pollution control program.

Add to the beginning of section 13-7.04:

Payment for all temporary tracking control items is included in the payment for water pollution control program.

Add to the beginning of section 13-9.04:

Payment for all temporary concrete washouts is included in the payment for water pollution control program.

Add to the beginning of section 13-10.04:

Payment for all temporary linear sediment barrier items is included in the payment for water pollution control program.

^^

14 ENVIRONMENTAL STEWARDSHIP

Add to section 14-1.02A:

An ESA exists on this project.

Before start of work, protect the ESA by installing temporary fence (Type ESA).

Limited access to the ESA is allowed for debris and trash removal. Notify the Engineer 5 business days before the planned entry date. Any other access to an ESA is prohibited.

Replace section 14-6.02 with:

14-6.02 SPECIES PROTECTION

14-6.02A General

Section 14-6.02 includes specifications for protecting regulated species or their habitat.

This project is within or near habitat for regulated species shown in the following table:

Species Name
California Red-legged Frog
Migratory and nongame birds
Least Bell's Vireo
South Central California Coast Steelhead

14-6.02B Material

Not Used

14-6.02C Construction

14-6.02C(1) General

Not Used

14-6.02C(2) Protective Radius

Upon discovery of a regulated species, stop construction activities within a 100-foot radius of the discovery or as defined in the table below. Immediately notify the Engineer. Do not resume activities until receiving notification from the Engineer.

Regulated species name	Protective radius
Active Raptor Nests	200-feet

14-6.02C(3) Protocols

Not Used

14-6.02C(4) Biological Resource Information

Not Used

14-6.02C(5) Protection Measures

Not Used

14-6.02C(6) Monitoring Schedule

Not Used

14-6.02D Payment

Not Used

Replace section 14-6.04 with:

14-6.04 FISH PROTECTION

14-6.04A General

14-6.04A(1) Summary

Section 14-6.04 includes specifications for fish protection. Protect all life stages of anadromous fish in streams, conduct work activities to allow free passage of anadromous migratory fish or as allowed by PLAC terms and conditions. Assure that construction work does not produce sound in water that results in unauthorized take of listed species.

Install exclusionary material, cofferdam, or a combination of both adjacent to Tar Spring Creek bridge. The County biologist will conduct any required fish relocation.

14-6.04A(2) Definitions

listed fish: Fish that is listed or proposed as a Threatened Species or as an Endangered Species under the Federal Endangered Species Act (FESA), or listed or proposed as a Threatened Species or as an Endangered Species under the California Endangered Species Act (CESA).

listed salmonid: Salmon, steelhead, or trout that are listed as a Threatened Species or as an Endangered Species under FESA, or listed or proposed as a Threatened Species or as an Endangered Species under CESA.

regulated fish: Listed fish species that are protected by law or regulation.

14-6.04A(3) Quality Control and Assurance

Not Used

14-6.04A(3)(a) Fish Handling

14-6.04B Materials

14-6.04B(1) General

Not Used

14-6.04B(2) Exclusion Material

Exclusion material must be 0.2 inch stretched mesh.

14-6.04B(3) Pump Screen

Pump screens must comply with National Marine Fisheries Service Southwest Region's *Fish Screening Criteria for Anadromous Salmonids*.

14-6.04C Construction

14-6.04C(1) General

Not Used

14-6.04C(2) Exclusion Installation

Follow the sequence for fish exclusion in the presence of the County biologist:

1. Install exclusion materials, removing as many fish as possible
2. Install cofferdam or water bypass
3. Gradually dewater the work area
4. Remove remaining fish

The County Biologist will conduct any removal of fish.

14-6.04C(3) Pump Screen Requirements

Approach velocity must not exceed 0.33 feet per second.

14-6.04C(4) Fish Removal

The County Biologist will conduct any removal of fish.

14-6.04C(5) Disposal

Dispose of all exclusion devices when no longer needed.

14-6.04D Payment

Payment for fish protection is included in the payment for the temporary creek diversion system.

Replace the 2nd paragraph of section 14-8.02A with:

The County biologist will monitor sound levels during pile driving activities and us authorized to stop pile driving activities if the sound levels exceed those specified in the Biological Opinion issues by the National Marine Fisheries Service (included as an attachment to the Environmental Permit Summary Form that included as an appendix to these Contract Documents.

Do not operate construction equipment or run the equipment engines from 7:00 p.m. to 7:00 a.m. or on Sundays except, as approved by the Engineer, you may operate equipment within the project limits during these hours to:

1. Service traffic control facilities
2. Service construction equipment

Delete section 14-10.02

Replace "Reserved" in section 14-11.08 with:

14-11.08A General

Section 14-11.08 includes specifications relating to the disturbance of existing paint systems.

The existing paint system on bridge number 49C0143 contains lead. Any work that disturbs the existing paint system exposes workers to health hazards and produces:

1. Debris containing heavy metal in amounts that exceed the thresholds established in 8 CA Code of Regs and 22 CA Code of Regs. This debris is a County-generated hazardous waste.
2. Toxic fumes when heated.

Grime and detritus already on the bridge before the start of work may also contain lead. Consider this grime and detritus part of the existing paint system. The County is the hazardous waste generator if the Engineer accepts waste-characterization test results demonstrating that the debris is a hazardous waste.

Contain all debris produced when the existing paint system is disturbed. If containment measures are inadequate to contain and collect debris produced when the existing paint system is disturbed, stop the work and do not perform additional work until:

1. Revised debris containment and collection plan has been authorized
2. Released material has been collected and contained

Handle, store, transport, and dispose of debris produced when the existing paint system is disturbed under applicable federal, state, and local hazardous waste laws.

14-11.08B Submittals

14-11.08B(1) General

Not Used

14-11.08B(2) Debris Containment and Collection Plan

Submit a debris containment and collection plan. The plan must:

1. Identify materials, equipment, and methods to be used when the existing paint system is disturbed
2. Include shop drawings of:
   2.1. Containment systems complying with section 59-2.03B(3)
   2.2. Components that provide ventilation, air movement, and visibility for worker safety
3. Include the name and location of the analytical laboratory that will perform the analyses
4. Identify the hazardous waste transporter that will haul the debris and provide documentation of
   4.1 Current DTSC registration
   4.2 Compliance with the CA Highway Patrol Biennial Inspection of Terminals Program
5. Include the name and location of the disposal facility that will accept the hazardous waste

Allow 20 days for review.

If required, submit a revised debris containment and collection plan.

14-11.08B(3) Lead Compliance Plan

Submit a lead compliance plan under section 7-1.02K(6)(j)(ii).

14-11.08B(4) Air Monitoring Reports

Not Used

14-11.08B(5) Soil Sampling Results for Debris Containment Verification

Not Used

14-11.08B(6) Waste-Characterization Test Results

Submit waste-characterization test results for the debris and chain of custody documentation before:

1. Requesting the Engineer’s signature on the disposal facility's waste profile document
2. Requesting a generator's EPA Identification Number
3. Removing the debris from the site

14-11.08B(7) Request for U.S. Environmental Protection Agency Identification Number

Submit a request for the generator's EPA Identification Number when the Engineer accepts waste-characterization test results documenting that the debris is a hazardous waste.

14-11.08B(8) Disposal Documentation

Submit documentation from the receiving landfill or recycling facility confirming proper disposal within 5 business days of transporting debris from the project.

14-11.08C Safety and Health Provisions

14-11.08C(1) General

Comply with 8 CA Code of Regs, including § 1532.1.

14-11.08C(2) Protective Work Clothing and Washing Facilities

Supply clean protective work clothing for 5 County personnel:

1. Whenever there is possible exposure to heavy metals or silica dust
2. During application of paint undercoats

Replace protective work clothing as needed.

Protective work clothing and washing facilities must be inspected and authorized for use by County personnel before starting any activity with the potential for lead exposure.

Protective work clothing remains your property upon completion of the Contract.

14-11.08D Work Area Monitoring

14-11.08D(1) General

Not Used

14-11.08D(2) Air Monitoring

Not Used

14-11.08D(3) Soil Sampling for Debris Containment

In areas without exposed soil, the concentrations of heavy metals in the work area must not increase when the existing paint system is disturbed. Any visible increase in the concentrations of heavy metals must be removed.

14-11.08E Debris Management

14-11.08E(1) Debris Storage

Debris produced when the existing paint system is disturbed must not be temporarily stored on the ground. Before the end of each work shift, remove accumulated debris from the containment system. Store the debris as a hazardous waste.

14-11.08E(2) Debris Waste Characterization

Perform waste characterization testing on the debris as required by the disposal facility including:

1. Total lead by US EPA Method 6010B
2. Soluble lead by California Waste Extraction Test (CA WET)
3. Soluble lead by Toxicity Characteristic Leaching Procedure (TCLP)

From the first 220 gal of hazardous waste or portion thereof, if less than 220 gal of hazardous waste are produced, a minimum of 4 randomly selected samples must be taken and analyzed individually. Samples must not be composited. From each additional 880 gal of hazardous waste or portion thereof, if less than 880 gal are produced, a minimum of 1 additional random sample must be taken and analyzed.

Use chain of custody procedures consistent with chapter 9 of US EPA Test Methods for Evaluating Solid Waste, Physical/Chemical Methods (SW-846) while transporting samples from the job site to the analytical laboratory. The laboratory must be certified by the CDPH's Environmental Laboratory Accreditation Program (ELAP) for all analyses to be performed.

Before performing the analyses, the laboratory must homogenize each sample. The homogenization process must not include grinding of the samples. A sample aliquot must be:

1. Obtained in an amount large enough for all analyses to be performed

2. Homogenized a 2nd time
3. Used for the total and soluble analyses after the 2nd homogenization

14-11.08E(3) Debris Transport and Disposal

14-11.08E(3)(a) General

For bidding purposes, assume the debris is a hazardous waste.

14-11.08E(3)(b) Hazardous Waste Debris

After the Engineer accepts the waste-characterization test results, dispose of the debris:

1. Within 30 days after accumulating 220 lb of debris
2. At an appropriately permitted Class I facility located in California

Make all arrangements with the operator of the disposal facility.

If less than 220 lb of hazardous waste is generated in total, dispose of it within 30 days after the start of accumulation of the debris.

Use a hazardous waste manifest and a transporter using vehicles with current DTSC registration certificate when transporting hazardous waste. The Engineer provides the generator's EPA Identification Number and signs all manifests as the hazardous waste generator within 2 business days of accepting the waste-characterization test results and receiving your request for the generator's EPA Identification Number.

14-11.08E(3)(c) Nonhazardous Waste Debris

If waste characterization test results demonstrate that the debris is a nonhazardous waste and the Engineer accepts the results, dispose of the debris at an appropriately permitted CA Class II or CA Class III facility or recycle it. Make all arrangements with the operator of the disposal facility and comply with the facility's requirements.

You may dispose of nonhazardous debris at a facility equipped to recycle the debris if:

1. Copper slag abrasive blended by the supplier with a calcium silicate compound is used for blast cleaning.
2. You make all arrangements with the recycling facility's operator and perform any facility-required testing of the debris.

The County does not adjust payment for disposal of nonhazardous debris at a recycling facility.

Replace section 14-11.09 with:

14-11.09 TREATED WOOD WASTE

14-11.09A General

14-11.09A(1) Summary

Section 14-11.09 includes specifications for handling, storing, transporting, and disposing of treated wood waste (TWW).

Wood removed from the existing bridge railing and approach railing is TWW. Manage TWW under 22 CA Code of Regs, Div. 4.5, Chp. 34.

14-11.09A(2) Submittals

For disposal of TWW, submit as an informational submittal a copy of each completed shipping record and weight receipt within 5 business days.

14-11.09B Materials

Not Used

14-11.09C Construction

14-11.09C(1) General

Not Used

14-11.09C(2) Training

Provide training to personnel who handle TWW or may come in contact with TWW. Training must include:

1. Applicable requirements of 8 CA Code of Regs
2. Procedures for identifying and segregating TWW
3. Safe handling practices
4. Requirements of 22 CA Code of Regs, Div. 4.5, Chp. 34
5. Proper disposal methods

Maintain records of personnel training for 3 years.

14-11.09C(3) Storage

Store TWW before disposal using the following methods:

1. Elevate on blocks above a foreseeable run-on elevation and protect from precipitation for no more than 90 days.
2. Place on a containment surface or pad protected from run-on and precipitation for no more than 180 days.
3. Place in water-resistant containers designed for shipping or solid waste collection for no more than 1 year.
4. Place in a storage building as defined in 22 CA Code of Regs, Div. 4.5, Chp. 34, § 67386.6(a)(2)(C).

Prevent unauthorized access to TWW using a secured enclosure such as a locked chain-link-fenced area or a lockable shipping container located within the job site.

Resize and segregate TWW at a location where debris from the operation including sawdust and chips can be contained. Collect and manage the debris as TWW.

Provide water-resistant labels that comply with 22 CA Code of Regs, Div. 4.5, Chp. 34, §67386.5, to clearly mark and identify TWW and accumulation areas. Labels must include:

1. Caltrans, District number, Construction, Construction Contract number
2. District office address
3. Engineer's name, address, and telephone number
4. Contractor's contact name, address and telephone number
5. Date placed in storage

14-11.09C(4) Transporting and Disposal

Before transporting TWW, obtain an agreement from the receiving facility that the TWW will be accepted. Protect shipments of TWW from loss and exposure to precipitation. For projects with 10,000 lb or more of TWW, request a generator's EPA Identification Number at least 5 business days before the 1st shipment. Each shipment must be accompanied by a shipping record such as a bill of lading or invoice that includes:

1. Caltrans district number
2. Construction Contract number
3. County office address
4. Engineer's name, address, and telephone number
5. Contractor's contact name and telephone number
6. Receiving facility name and address
7. Waste description: Treated Wood Waste with preservative type if known or unknown/mixture
8. Project location
9. Estimated quantity of shipment by weight or volume
10. Date of transport
11. Date of receipt by the receiving TWW facility
12. Weight of shipment as measured by the receiving TWW facility

13. Generator's EPA Identification Number for projects with 10,000 lb or more of TWW

The shipping record must be at least a 4-part carbon or carbonless 8-1/2-by-11-inch form to allow retention of copies by the Engineer, transporter, and disposal facility.

Dispose of TWW at an approved TWW facility. A list of currently approved TWW facilities is available at:

http://www.dtsc.ca.gov/HazardousWaste/upload/lanfillapr11pdated1.pdf

Dispose of TWW within:

1. 90 days of generation if stored on blocks
2. 180 days of generation if stored on a containment surface or pad
3. 1 year of generation if stored in a water-resistant container or within 90 days after the container is full, whichever is shorter
4. 1 year of generation if storing in a storage building as defined in 22 CA Code of Regs, Div. 4.5, Chp. 34, § 67386.6(a)(2)(C)

14-11.09D Payment

Payment for handling, transporting and disposing of treated wood waste is included in the payment for Bridge Removal.

^^

15 EXISTING FACILITIES

Delete the 4th paragraph of section 15-3.01 in the RSS for section 15-3.01.

Add to the end of the 1st sentence of section 15-4.01A(1):

, weirs, concrete check dams and approach railings.

Add to section 15-4.01A(1):

Under Section 14-9.02, you must notify the local air district agency as required by the National Emission Standards for Hazardous Air Pollutants (NESHAP) at 40 CFR Part 61, Subpart M, and California Health and Safety Code section 39658(b)(1). A copy of the notification form and attachments must be provided before submittal. Allow the Engineer 15 days for review before submitting to the local air agency. Notification must take place a minimum of 10 working days before demolition or renovation activities as defined in the NESHAP regulations. Notification forms and other information are available from the San Luis Obispo County APCD web site at: http://www.slocleanair.org/business/asbestos.php You must mail the original notification form with any necessary attachments to:

San Luis Obispo County Air Pollution Control District.
Compliance Division
3433 Robert Court
San Luis Obispo, CA 93401
(805) 781-5912 phone
(805) 781-1002 Fax

Provide a copy of the final notification to the Engineer.

A copy of the final notification form and attachments must be provided to the Engineer a minimum of 30 days before the start of bridge removal work.

If you do not receive direction from the Engineer within 20 days after submittal that changes to the notification are required, or written confirmation of receipt and approval by the San Luis Obispo County

Air Pollution Control District and the CARB, then an extension of time commensurate with the delay in completion of the work thus caused will be granted and you will be relieved from any claim for liquidated damages, or engineering and inspection charges or other penalties for the period covered by that extension of time; provided that you notify the Engineer in writing of the causes of delay within 15 days from the beginning of the delay. The Engineer will review the facts and the extent of the delay, and the Engineer's findings will be final and conclusive.

Replace the 4th paragraph of section 15-4.01C(3(a) with:

Remove concrete weir completely.

Remove the check dam, piling, piers, abutments, and pedestals to below the anticipated scour elevation of 164.9.

^^

DIVISION III GRADING

16 CLEARING AND GRUBBING

Add to section 16-1.01:

Completely remove pipes and rubble in the creek as shown. Any trash, debris, and manmade objects must be removed also.

Replace the 4th paragraph in section 16-1.03A with:

Clear and grub vegetation only within the excavation and embankment slope lines and within the TCE of the access road.

Replace the 1st sentence of the 2nd paragraph in section 16-1.03B with:

Cut tree branches within 15 feet of the roadway as directed by the Engineer.

Add to section 16-1.03C:

Remove all trees. Only trees with a diameter greater than 4-inches are shown more will require removal.

Add to section 16-1.03C:

All vegetation and topsoil removed from the construction site must be taken to a certified landfill to prevent the spread of invasive species.

^^^

19 EARTHWORK

Add to section 19-1.03A:

Double handling of earthwork materials may be required.

Add to section 19-1.03D:

Large buried rip rap pieces will be encountered while excavating within channel banks and their removal is required.

Add to section 19-1.04:

Double handling of earthwork materials is included in the payment for roadway excavation.

Add to section 19-3.01A(1):

Structure backfill includes constructing the geocomposite drain. Geocomposite drain must comply with section 68-7.

Replace the 7th paragraph in section 19-3.03B(4):

Remove cofferdams completely after completing substructure construction.

Add to section 19-5.01A:

All backfill within the Central Coast Water Authority must be compacted to a minimum 95 percent relative compaction under ASTM D1557.

Add to section 19-7.02C:

The portion of imported borrow placed within 4 feet of the finished grade must have a resistance (R-Value) of at least 25.

^^

20 LANDSCAPE

Add to the 3th paragraph in section 20-3.03C(3)(d)(ii) of the RSS for section 20:

Plant willow cuttings between October 1 and April 30.

Willow cuttings must be placed in 8” perforated degradable cardboard tubes as shown.

Replace the 5th paragraph in section 20-3.03C(3)(d)(ii) of the RSS for section 20 with:

Plant the base of the cutting as shown. If more than 5 bud scars are exposed, trim off the excess willow cutting length.

Replace the 1st and 2nd paragraph in section 20-14.02B with:

Willow cutting will be collected from the Tar Spring Creek riparian corridor. No more than 20% of material from individual plants can be removed as cuttings. If it is determined that willows from the riparian corridor will not adequately supply the replanting effort, appropriate stock from the County’s native plant greenhouse or commercially available container stock will be supplied.

A County biologist must be on site during harvesting and planting of willow cuttings.

Replace the 2nd paragraph of section 20-14.03B with:

Plant cuttings within 24 hours after harvesting and soak them a minimum of 8 hours in water before planting. Cuttings not planted within 24 hours after cutting or allowed to dry out must not be used.

Replace the 7th paragraph of section 20-14.03B with:

Plant the base of the cutting as shown and have from 3 to 5 bud scars exposed above the ground. If more than 5 bud scars are exposed, remove the excess scars by pruning.

^^

21 EROSION CONTROL

Add to section 21-1.01B:

The certificate of compliance for weed-free straw must include the *Certificate of Quarantine Compliance*.

Add to section 21-1.02I:

Straw must be weed free. Weed-free straw must comply with the Department of Food and Agriculture's certification requirements for weed-free straw.

Add to section 21-1.02O(1):

Erosion control blanket must be Type A and placed on all slopes greater than 6:1 (H:V) that are to receive hydroseed.

Add to section 21-1.02P:

Straw must be weed free. Weed-free straw must comply with the Department of Food and Agriculture's certification requirements for weed-free straw.

Replace the 2nd paragraph in section 21-1.03O with:

Fasten RECP with 6 inch biodegradable stakes only.

Add section 21-1.02T:

21-1.02T Coir Wattles

Coir wattles (i.e coir rolls) must be made of the following:

Coir log must be:

1. 12-inch diameter, coir coconut wattle
2. Density 7 lbs/cf or greater
3. 3.8 lbs/lf weight per linear foot

Outer net must be:

1. 2” by 2” bristle coir twine
2. Twine breaking strength: 90 lbs or greater

Wood stakes must be:

1. Untreated fir, redwood, cedar, or pine and cut from sound timber
2. Straight and free of loose or unsound knots and other defects which would render the stakes unfit for use
3. Pointed on the end to be driven into the ground
4. Placed every 3-ft

Add section 21-1.03R:

21-1.03R Coir Wattles

Before placing coir wattle, remove obstructions including rocks, clods, and debris greater than one inch in diameter from the ground.

If coir wattle is to be placed in the same area as erosion control netting, install the netting before placing the coir roll. For other soil stabilization practices such as hydraulic mulch or compost, place the coir roll and then apply the soil stabilization practice.

Place coir wattle approximately parallel to the slope contour. For any 20 foot section of coir roll, do not allow the coir roll to vary more than 5 percent from level.

Install coir wattle by:

1. Placing in a furrow that is from 2 to 4 inches deep
2. Securing with wood stakes every 3 feet along the length of the coir roll
3. Securing the ends of the coir roll by placing a stake 6 inches from the end of the roll
4. Driving the stakes into the soil so that the top of the stake is less than 2 inches above the top of the coir roll

^^

DIVISION IV SUBBASES AND BASES

26 AGGREGATE BASES

Add to section 26-1.01:

Temporary aggregate base must comply with section 5-1.36A of the General Conditions and the Contract for a permanent aggregate base of the same class.

Spread and compact temporary aggregate base as specified under section 26-1.03C and section 26-1.03D.

When no longer needed temporary aggregate base becomes the property of the County. You must haul and stockpile it at the north corner of the Valley Investment Company property, APN 047-161-012, as directed by the Engineer. Approximate stockpile location map is included as an appendix to these Contract Documents.

Temporary aggregate base must be completely removed to not change the quality of the soil. The Engineer must approve the site upon removal.

^^

DIVISION V SURFACINGS AND PAVEMENTS

39 HOT MIX ASPHALT

Replace the section 39-1 of the RSS with:

39-1.01 GENERAL

39-1.01A Summary

Section 39-1 includes general specifications for producing and placing hot mix asphalt.

HMA includes one or more of the following types:

1. Type A HMA
2. RHMA-G
3. OGFC
4. BWC
5. Minor HMA

39-1.01B Definitions

binder replacement: Binder from RAP expressed as a percent of the total binder in the mix.

coarse aggregate: Aggregate retained on a no. 4 sieve.

fine aggregate: Aggregate passing the no. 4 sieve.

leveling course: Thin layer of HMA used to correct minor variations in the longitudinal and transverse profile of the pavement before placement of other pavement layers.

lower course: Layer of HMA below 0.2 feet from finished grade exclusive of OGFC.

miscellaneous areas: Areas outside the traveled way such as:

1. Median areas not including inside shoulders
2. Island areas
3. Sidewalks
4. Gutters
5. Ditches
6. Overside drains
7. Aprons at ends of drainage structures

processed RAP: RAP that has been fractionated.

supplemental fine aggregate: Aggregate passing the no. 30 sieve, including hydrated lime, portland cement, and fines from dust collectors.

surface course: Upper 0.2 feet of HMA exclusive of OGFC.

top layer: Final riding surface.

39-1.01C Submittals

39-1.01C(1) General

Reserved

39-1.01C(2) Job Mix Formula

39-1.01C(2)(a) General

Except for the HMA to be used in miscellaneous areas and dikes, submit your proposed JMF for each type of HMA to be used within 10 business day of receipt of the fully executed contract. The JMF must be submitted on the Contractor Job Mix Formula Proposal form along with:

1. Mix design documentation on Contractor Hot Mix Asphalt Design Data form dated within 24 months of submittal
2. JMF verification on a Caltrans Hot Mix Asphalt Verification form, if applicable

3. JMF renewal on a Caltrans Job Mix Formula Renewal form, if applicable
4. MSDS for:
   4.1. Asphalt binder
   4.2. Supplemental fine aggregate except fines from dust collectors
   4.3. Antistrip additives

The Contractor Hot Mix Asphalt Design Data form must show documentation on aggregate quality.

If you cannot submit a verified JMF on a Caltrans Hot Mix Asphalt Verification form dated within 24 months before HMA production, the Engineer may verify the JMF. In any case, you are responsible for ensuring any mix supplied to the project conforms to these specifications,

Submit a new JMF if you change any of the following:

1. Target asphalt binder percentage greater than ±0.2 percent
2. Asphalt binder supplier
3. Combined aggregate gradation
4. Aggregate sources
5. Liquid antistrip producer or dosage
6. Average binder content in a new fractionated RAP stockpile by more than ±2.0 percent from the average RAP binder content reported on page 4 of your Contractor Hot Mix Asphalt Design Data form
7. Average maximum specific gravity in a new fractionated RAP stockpile by more than ±0.060 from the average maximum specific gravity value reported on page 4 of your Contractor Hot Mix Asphalt Design Data form
8. Any material in the JMF

Allow the Engineer 5 business days from a complete JMF submittal for document review of the aggregate qualities, mix design, and JMF. The Engineer notifies you if the proposed JMF submittal is accepted.

If your JMF fails verification testing, submit an adjusted JMF based on your testing. An adjusted JMF requires a new Contractor Job Mix Formula Proposal form and Contractor Hot Mix Asphalt Design Data form and verification of a plant-produced sample.

You may submit an adjusted aggregate gradation TV on a Contractor Job Mix Formula Proposal form before verification testing. Aggregate gradation TV must be within the TV limits specified.

39-1.01C(2)(b) Job Mix Formula Renewal

You may request a JMF renewal by submitting:

1. Proposed JMF on a Contractor Job Mix Formula Proposal form
2. Previously verified JMF documented on a Caltrans Hot Mix Asphalt Verification form dated within 12 months
3. Mix design documentation on a Contractor Hot Mix Asphalt Design Data form used for the previously verified JMF

39-1.01C(2)(c) Job Mix Formula Modification

For an authorized JMF, submit a modified JMF if you change any of the following:

1. Asphalt binder supplier
2. Liquid antistrip producer
3. Liquid antistrip dosage

You may change any of the above items only once during the Contract.

Submit your modified JMF request a minimum of 15 days before production. Each modified JMF submittal must consist of:

1. Proposed modified JMF on Contractor Job Mix Formula Proposal form, marked *Modified*.
2. Mix design records on Contractor Hot Mix Asphalt Design Data form for the authorized JMF to be modified.
3. JMF verification on Hot Mix Asphalt Verification form for the authorized JMF to be modified.

4. Test results for the modified JMF in compliance with the mix design specifications. Perform tests at the mix design OBC as shown on the Contractor Asphalt Mix Design Data form.

With an accepted modified JMF submittal, the Engineer may verify each modified JMF within 10 days of receiving all verification samples.

39-1.01C(3) Quality Control Plan

With your proposed JMF submittal, submit a QC plan for HMA.

The QC plan must describe the organization and procedures for:

1. Controlling HMA quality characteristics
2. Taking samples, including sampling locations
3. Establishing, implementing, and maintaining QC
4. Determining when corrective actions are needed
5. Implementing corrective actions
6. Methods and materials for backfilling core locations

The QC plan must address the elements affecting HMA quality including:

1. Aggregate
2. Asphalt binder
3. Additives
4. Production
5. Paving

The QC plan must include aggregate QC sampling and testing during lime treatment.

The Engineer reviews the QC plan within 5 business days from the submittal. Do not start HMA production until the Engineer authorizes the plan.

If QC procedures, personnel, tester qualifications, sample testing locations, or lab accreditation status change, submit a QC plan supplement at least 3 business days before implementing the proposed change. Do not implement the change without authorization.

39-1.01C(4) Test Results

For mix design, JMF verification, production start-up, and each 10,000 tons, submit AASHTO T 283 and AASHTO T 324 (Modified) test results to the Engineer.

Submit all QC test results, except AASHTO T 283 and AASHTO T 324 (Modified), within 3 business days of production. Submit AASHTO T 283 QC tests within 15 days of sampling.

For tests performed under AASHTO T 324 (Modified), submit test data and 1 tested sample set within 5 business days of sampling.

If coarse and fine durability index tests are required, submit test results within 2 business days of testing.

If QC tests are not submitted, you waive the right to referee testing.

39-1.01C(5) Reserved

39-1.01C(6) Liquid Antistrip Treatment

If liquid antistrip treatment is used, submit the following with your proposed JMF submittal:

1. One 1-pint sample
2. Infrared analysis including copy of absorption spectra
3. Certified copy of test results
4. Certificate of compliance for each liquid antistrip shipment. On each certificate of compliance, include:
   - 4.1. Your signature and printed name
   - 4.2. Shipment number
   - 4.3. Material type
   - 4.4. Material specific gravity

4.5. Refinery
4.6. Consignee
4.7. Destination
4.8. Quantity
4.9. Contact or purchase order number
4.10. Shipment date

6. Proposed proportions for liquid antistrip

For each delivery of liquid antistrip to the HMA production plant, submit a 1-pint sample to the Engineer. Submit shipping documents. Label each liquid antistrip sampling container with:

1. Liquid antistrip type
2. Application rate
3. Sample date
4. Contract number

At the end of each day's production shift, submit production data in electronic and printed media. Present data on electronic media in tab delimited format. Use line feed carriage return with 1 separate record per line for each production data set. Allow sufficient fields for the specified data. Include data titles at least once per report. For each HMA mixing plant type, submit the following information in the order specified:

1. For batch plant mixing:
   1.1. Production date
   1.2. Time of batch completion
   1.3. Mix size and type
   1.4. Each ingredient's weight
   1.5. Asphalt binder content as a percentage of the total weight of mix
   1.6. Liquid antistrip content as a percentage of the asphalt binder weight
2. For continuous mixing plant:
   2.1. Production date
   2.2. Data capture time
   2.3. Mix size and type
   2.4. Flow rate of wet aggregate collected directly from the aggregate weigh belt
   2.5. Aggregate moisture content as percentage of the dry aggregate weight
   2.6. Flow rate of asphalt binder collected from the asphalt binder meter
   2.7. Flow rate of liquid antistrip collected from the liquid antistrip meter
   2.8. Asphalt binder content as percentage of the total weight of mix calculated from:
      2.8.1. Aggregate weigh belt output
      2.8.2. Aggregate moisture input
      2.8.3. Asphalt binder meter output
   2.9. Liquid antistrip content as percentage of the asphalt binder weight calculated from:
      2.9.1. Asphalt binder meter output
      2.9.2. Liquid antistrip meter output

39-1.01C(7) Lime Treatment

If aggregate lime treatment is used, submit the following with your proposed JMF submittal and each time you produce lime-treated aggregate:

1. Exact lime proportions for fine and coarse virgin aggregate
2. If marination is required, the averaged aggregate quality test results within 24 hours of sampling
3. For dry lime aggregate treatment, a treatment data log from the dry lime and aggregate proportioning device in the following order:
   3.1. Treatment date
   3.2. Time of day the data is captured
   3.3 Aggregate size being treated
   3.4. HMA type and mix aggregate size
   3.5. Wet aggregate flow rate collected directly from the aggregate weigh belt
   3.6. Aggregate moisture content, expressed as a percent of the dry aggregate weight
   3.7. Flow rate of dry aggregate calculated from the flow rate of wet aggregate
   3.8. Dry lime flow rate

3.9. Lime ratio from the authorized JMF for each aggregate size being treated
3.10. Lime ratio from the authorized JMF for the combined aggregate
3.11. Actual lime ratio calculated from the aggregate weigh belt output, the aggregate moisture input, and the dry lime meter output, expressed as a percent of the dry aggregate weight
3.12. Calculated difference between the authorized lime ratio and the actual lime ratio

4. For lime slurry aggregate treatment, a treatment data log from the slurry proportioning device in the following order:
   4.1. Treatment date
   4.2. Time of day the data is captured
   4.3. Aggregate size being treated
   4.4. Wet aggregate flow rate collected directly from the aggregate weigh belt
   4.5. Moisture content of the aggregate just before treatment, expressed as a percent of the dry aggregate weight
   4.6. Dry aggregate flow rate calculated from the wet aggregate flow rate
   4.7. Lime slurry flow rate measured by the slurry meter
   4.8. Dry lime flow rate calculated from the slurry meter output
   4.9. Authorized lime ratio for each aggregate size being treated
   4.10. Actual lime ratio calculated from the aggregate weigh belt and the slurry meter output, expressed as a percent of the dry aggregate weight
   4.11. Calculated difference between the authorized lime ratio and the actual lime ratio
   4.12. Dry lime and water proportions at the slurry treatment time

Each day during lime treatment, submit the treatment data log on electronic media in tab delimited format on a removable CD-ROM storage disk. Each continuous treatment data set must be a separate record using a line feed carriage return to present the specified data on 1 line. The reported data must include data titles at least once per report.

39-1.01C(8) Reserved

39-1.01C(9) Samples

For the samples taken for JMF verification, upon request submit 3 parts to the Engineer and use 1 part for your testing.

At production start-up, submit samples split from your HMA production sample for AASHTO T 283 and AASHTO T 324 (Modified) tests to the Engineer.

For production samples taken, submit 3 parts to the Engineer and use 1 part for your testing.

39-1.01C(10)–39-1.01C(11) Reserved

39-1.01C(12) Reserved

39-1.01C(13) Pavement Smoothness

39-1.01C(13)(a) General

Reserved

39-1.01C(13)(b) Straightedge Measurements

Within 2 business days of performing straightedge measurements, submit areas requiring smoothness correction. Identify locations of smoothness correction by plan stationing or other reference means acceptable to the Engineer:

39-1.01C(13)(c) Reserved

39-1.01C(13)(d) Reserved

39-1.01C(13)(e) Reserved

39-1.01C(14)–39-1.01C(15) Reserved

39-1.01D Quality Control and Assurance

39-1.01D(1) General

When testing under AASHTO T 324 (Modified), test under AASHTO T 324 with the following parameters:

1. Target air voids must equal 7 ± 1 percent

2. Specimen height must be 60 ± 1 mm
3. Number of test specimens must be 4 (2 test sets)
4. Do not average test sets
5. Test specimen must be a 150 mm gyratory compacted specimen
6. Test temperature must be set at:
   6.1. 113 ± 2 degrees F for PG 58
   6.2. 122 ± 2 degrees F for PG 64
   6.3. 131 ± 2 degrees F for PG 70 and above
7. Measurements for impression must be taken at every 100 passes along the total length of sample
8. Inflection point defined as the number of wheel passes at the intersection of the creep slope and the stripping slope at maximum rut depth
9. Testing shut off must be set at 25,000 passes
10. Submersion time for samples must not exceed 4 hours

Take samples under California Test 125.

HMA samples may be heated a maximum of 2 times for up to 4 hours each.

39-1.01D(2) Job Mix Formula Verification

The Engineer may verify the JMF from samples taken from HMA produced by the plant to be used. The production set point at the plant must be within ±0.2 from the asphalt binder percentage target value shown in your Contractor Job Mix Formula Proposal form. Notify the Engineer at least 2 business days before sampling materials. Samples may be taken from a different project including a non-County project if you make arrangements for the Engineer to be present during sampling.

In the Engineer's presence and from the same production run, take samples of:

1. Aggregate. Coarse, fine, and supplemental fine aggregate must be taken from the combined cold feed belt, or hot bins. If lime treatment is required, samples must be taken from individual stockpiles before lime treatment. Samples must be at least 120 lb for each coarse aggregate, 80 lb for each fine aggregate, and 10 lb for each type of supplemental fines. For hot bin samples, the County combines these aggregate samples to comply with the TV submitted on a Contractor Job Mix Formula Proposal form.
2. Asphalt binder. Take 2 samples minimum. Each sample must be in a 1-quart cylindrical-shaped can with an open top and friction lid. If the asphalt binder is modified or rubberized, the asphalt binder must be sampled with the components blended in the proportions to be used.
3. RAP. RAP samples must be at least 50 lb from each fractionated stockpile used or 100 lb from the belt.
4. Plant-produced HMA. The HMA samples must be at least 250 lb.

For aggregate, RAP, and HMA, split the samples into at least 4 parts and label their containers. Three parts are for the County's verification testing and 1 part is for your testing.

After acceptance of the JMF submittal, if the Engineer chooses to verify the mix, the Engineer verifies each proposed JMF within 20 days of receiving all verification samples.

For JMF verification, the Engineer tests the following for compliance with the specifications:

1. Aggregate quality
2. Aggregate gradation
3. Voids in mineral aggregate on laboratory-produced HMA must comply with the mix design specifications for voids in mineral aggregate
4. HMA quality characteristics for County acceptance

To verify the HMA for air voids, voids in mineral aggregate, and dust proportion, the Engineer uses an average of 3 briquettes. The Engineer tests plant-produced material.

If the Engineer verifies the JMF, the Engineer furnishes you a Hot Mix Asphalt Verification form.

If the Engineer's test results on plant-produced samples do not show compliance with the specifications, the Engineer notifies you. Adjust your JMF based on your testing unless the Engineer authorizes reverification without adjustments. JMF adjustments may include a change in:

1. Asphalt binder content target value up to ±0.2 percent from the OBC value submitted on Contractor Hot Mix Asphalt Design Data form
2. Aggregate gradation target values within the target value limits specified in the aggregate gradation table

You may adjust the JMF only once due to a failed verification test.

For each HMA type and aggregate size specified, the Engineer verifies up to 2 proposed JMF submittals including a JMF adjusted after verification failure. If you submit more than 2 JMFs for each type of HMA and aggregate size, the Engineer deducts $3,000 from payments for each verification exceeding this limit. This deduction does not apply to verifications initiated by the Engineer or if a JMF expires while HMA production is stopped longer than 30 days.

A verified JMF is valid for 24 months.

39-1.01D(3) Job Mix Formula Authorization

You may start HMA production if:

1. The Engineer's review of the JMF shows compliance with the specifications
2. The JMF has been verified within 24 months before HMA production or if the Engineer waives verification testing
3. The Engineer authorizes the verified JMF
4. Your QC plan has been reviewed and approved by the Engineer

39-1.01D(4) Reserved

39-1.01D(5) Reserved

39-1.01D(6) Certifications

39-1.01D(6)(a) General

Laboratories testing aggregate and HMA qualities used to prepare the mix design and JMF must be qualified under AASHTO Materials Reference Laboratory program and the Caltrans Independent Assurance Program.

39-1.01D(6)(b) Hot Mix Asphalt Plants

Before production, the HMA plant must have a current qualification under Caltrans' Material Plant Quality Program.

39-1.01D(6)(c) Reserved

39-1.01D(6)(d)–39-1.01D(6)(e) Reserved

39-1.01D(7) Prepaving Meeting

Meet with the Engineer at a prepaving meeting at a mutually agreed time and place. Discuss the QC plan and the methods of performing HMA production and paving work.

The following personnel must attend the prepaving meeting:

1. Project manager
2. Superintendent
3. HMA plant manager
4. HMA paving foreman

39-1.01D(8) Quality Control

39-1.01D(8)(a) General

QC test results must comply with the specifications for acceptance.

Submit QC test results within 3 business days of completing the tests. If QC tests are not submitted, you waive the right to referee testing.

Prepare 3 briquettes for air voids content and voids in mineral aggregate determination. Report the average of 3 tests.

Except for smoothness, if 2 consecutive QC test results or any 3 QC test results for 1 day's production do not comply with the materials specifications:

1. Notify the Engineer
2. Stop HMA production if directed by the Engineer

3. Take corrective action
4. Demonstrate compliance with the specifications before resuming production and placement

For QC tests performed under AASHTO T 27, results are considered 1 QC test regardless of number of sieves out of compliance.

Do not resume production and placement until the Engineer authorizes your corrective action proposal.

39-1.01D(8)(b) Reserved

39-1.01D(8)(c) Aggregate

39-1.01D(8)(c)(i) General

Reserved

39-1.01D(8)(c)(ii) Aggregate Lime Treatments

If lime treatment is required, sample coarse and fine aggregate from individual stockpiles before lime treatment. Combine aggregate in the JMF proportions. Test the aggregate under the test methods and frequencies shown in the following table:

Aggregate Quality Control During Lime Treatment

Quality characteristic	Test method	Minimum sampling and testing frequency
Sand equivalent[a, b]	AASHTO T 176	1 per 750 tons of untreated aggregate
Percent of crushed particles	AASHTO T 335	1 per 10,000 tons or 2 per project whichever is greater
Los Angeles Rattler	AASHTO T 96	
Fine aggregate angularity	AASHTO T 304 Method A	
Flat and elongated particles	ASTM D4791	

[a]Report test results as the average of 3 tests from a single sample.
[b]Use of a sand reading indicator is required as shown in AASHTO T 176, Figure 1. Sections 4.7, 4.8, 7.1.2, and 8.4.3 do not apply.

For lime slurry aggregate treatment, determine the aggregate moisture content at least once every 2 hours of treatment. Calculate moisture content under AASHTO T 329 and report it as a percent of dry aggregate weight. Use the moisture content calculations as a set point for the proportioning process controller.

The device controlling lime and aggregate proportioning must produce a treatment data log. The log consists of a series of data sets captured at 10-minute intervals throughout daily treatment. The data must be a treatment activity register and not a summation. The material represented by a data set is the quantity produced 5 minutes before and 5 minutes after the capture time. For the duration of the Contract, collected data must be stored by the controller.

If 3 consecutive sets of recorded treatment data indicate a deviation of more than 0.2 percent above or below the lime ratio in the accepted JMF, stop treatment and take corrective action.

If a set of recorded treatment data indicates a deviation of more than 0.4 percent above or below the lime ratio in the accepted JMF, stop treatment and do not use the material represented by that set of data in HMA.

If 20 percent or more of the total daily treatment indicates a deviation of more than 0.2 percent above or below the lime ratio in the accepted JMF, stop treatment and do not use that day's treated aggregate in HMA.

The Engineer may order you to stop aggregate treatment activities for any of following:

1. You fail to submit treatment data log
2. You fail to submit aggregate QC data for marinated aggregate
3. You submit incomplete, untimely, or incorrectly formatted data
4. You do not take corrective actions
5. You take late or unsuccessful corrective actions
6. You do not stop treatment when proportioning tolerances are exceeded
7. You use malfunctioning or failed proportioning devices

If you stop treatment for noncompliance, notify the Engineer of any corrective actions taken and conduct a successful 20-minute test run before resuming treatment.

39-1.01D(8)(d) Liquid Antistrip Treatment

For continuous mixing or batch-plant mixing, sample asphalt binder before adding liquid antistrip. For continuous mixing, sample the combined asphalt binder and liquid antistrip after the static mixer.

39-1.01D(8)(e) Production Start-up Evaluation

You and the Engineer evaluate HMA production and placement at production start-up or at any location agreed upon at least 3 business days in advance.

Within the first 750 tons produced on the 1st day of HMA production, in the Engineer's presence, and from the same production run, take samples of:

1. Aggregate
2. Asphalt binder
3. RAP
4. HMA

Sample aggregate from the combined cold-feed belt or hot bin. Take RAP samples from the RAP system.

For aggregate, RAP, and HMA, split the samples into at least 4 parts and label their containers. Submit 3 parts to the Engineer and keep 1 part.

You and the Engineer must test the samples and report test results, except for AASHTO T 324 (Modified) and AASHTO T 283 test results, within 5 business days of sampling. For AASHTO T 324 (Modified) and AASHTO T 283 test results, report test results within 15 days of sampling. If you proceed before receipt of the test results, the Engineer may consider the HMA placed to be represented by these test results.

Take one 4- or 6-inch diameter density core for each 250 tons or portion thereof of HMA placed. For each density core, the Engineer reports the bulk specific gravity determined under AASHTO T 275, Method A, in addition to the percent of theoretical maximum density.

39-1.01D(8)(f) Hot Mix Asphalt Density

During HMA placement determine HMA density using a nuclear gauge. On the 1st day of production, develop a correlation factor between cores and nuclear gauge under California Test 375.

Test for in-place density using cores and a nuclear gauge. Test at random locations you select and include the test results in your QC production tests reports.

39-1.01D(8)(g) Reserved

39-1.01D(8)(h) Density Cores

To determine density, take 4- or 6-inch diameter density cores at least once every 5 business days. Take 1 density core for every 250 tons of HMA from random locations the Engineer designates. Take density

cores in the Engineer's presence and backfill and compact holes with authorized material. Before submitting a density core, mark it with the density core's location and place it in a protective container.

If a density core is damaged, replace it with a density core taken within 1 foot longitudinally from the original density core. Relocate any density core located within 1 foot of a rumble strip to 1 foot transversely away from the rumble strip.

39-1.01D(8)(i) Reserved

39-1.01D(8)(j) Pavement Smoothness

39-1.01D(8)(j)(i) General

Test pavement smoothness using a 12-foot straightedge for the HMA pavement

39-1.01D(8)(j)(ii) Reserved

39-1.01D(8)(j)(iii) Reserved

39-1.01D(9) County Acceptance

39-1.01D(9)(a) General

The County tests treated aggregate for acceptance before lime treatment except for gradation.

The Engineer takes HMA samples for AASHTO T 283 and AASHTO T 324 (Modified) from one of the following:

1. At the plant
2. At the truck
3. Windrow

The Engineer takes HMA samples for all other tests from one of the following:

1. At the plant
2. At the truck
3. Windrow
4. Mat behind the paver

The Engineer's sampling and testing is independent of your QC sampling and testing.

If you request, the Engineer splits samples and provides you with a part.

No single test result may represent more than 750 tons or one day's production, whichever is less, excluding AASHTO T 283 and AASHTO T 324 (Modified).

Except for smoothness, if 2 consecutive County acceptance test results or any 3 County acceptance test results for 1 day's production do not comply with the specifications:

1. Stop HMA production
2. Take corrective action
3. Demonstrate compliance with the specifications before resuming production and placement

For County acceptance tests performed under AASHTO T 27, results are considered 1 County acceptance test regardless of the number of sieves out of compliance.

The Engineer accepts HMA based on:

1. Authorized JMF
2. Authorized QC plan
3. Asphalt binder compliance
4. Asphalt emulsion compliance
5. Visual inspection
6. Pavement smoothness

39-1.01D(9)(b) In-Place Density

Except for HMA pavement placed using method compaction, the Engineer tests the density core you take from each 250 tons of HMA. The Engineer determines the percent of theoretical maximum density for

each density core by determining the density core's density and dividing by the theoretical maximum density.

Density cores must be taken from the final layer, cored to the specified total paved thickness.

If the percent of theoretical maximum density does not comply with the specifications, the Engineer may accept the HMA and take a payment deduction.

39-1.01D(9)(c) Pavement Smoothness

The HMA pavement surface must not vary from the lower edge of the straightedge by more than:

1. 0.01 foot when the straightedge is laid parallel with the centerline
2. 0.02 foot when the straightedge is laid perpendicular to the centerline and extends from edge to edge of a traffic lane
3. 0.02 foot when the straightedge is laid within 24 feet of a pavement conform

Pavement smoothness may be accepted based on your testing in the absence of the County's testing.

39-1.01D(9)(d) Dispute Resolution

You and the Engineer must work together to avoid potential conflicts and to resolve disputes regarding test result discrepancies. Notify the Engineer within 5 business days of receiving a test result if you dispute the test result.

If you or the Engineer dispute each other's test results, submit QC test results and copies of paperwork including worksheets used to determine the disputed test results. An independent third party performs referee testing. Before the third party participates in a dispute resolution, it must be qualified under AASHTO Materials Reference Laboratory program, and Caltrans' Independent Assurance Program. The independent third party must have no prior direct involvement on this Contract. By mutual agreement, the independent third party is a laboratory not currently employed by you or your HMA producer

If split QC or acceptance samples are not available, the independent third party uses any available material representing the disputed HMA for evaluation.

If the independent third party determines the County's test results are valid, the Engineer deducts the independent third party's testing costs from payments. If the independent third party determines your test results are valid, the County pays the independent third party's testing costs.

39-1.02 MATERIALS

39-1.02A General

Reserved

39-1.02B Mix Design

39-1.02B(1) General

The HMA mix design must comply with AASHTO R 35 except:

1. Notes 3, 6, and 10 do not apply
2. AASHTO M 323 does not apply on combinations of aggregate gradation and asphalt binder contents to determine the OBC and HMA mixture qualities

The Contractor Hot Mix Asphalt Design Data form must show documentation on aggregate quality.

39-1.02B(2) Hot Mix Asphalt Treatments

If the test results for AASHTO T 283 or AASHTO T 324 (Modified) for untreated plant-produced HMA are less than the minimum requirements for HMA mix design, determine the plasticity index of the aggregate blend under California Test 204.

If the plasticity index is greater than 10, do not use that aggregate blend.

If the plasticity index is from 4 to 10, treat the aggregate with dry lime with marination or lime slurry with marination.

If the plasticity index is less than 4, treat the aggregate with dry lime or lime slurry with marination, or treat the HMA with liquid antistrip.

39-1.02B(3) Reserved

39-1.02C Asphalt Binder

Asphalt binder must comply with section 92.

For replace asphalt concrete surfacing or hot mix asphalt (leveling) the grade of asphalt binder for the HMA must be PG 64-10.

39-1.02D Aggregate

39-1.02D(1) General

Aggregate must be clean and free from deleterious substances.

The aggregate for replace asphalt concrete surfacing and hot mix asphalt (leveling) must comply with the gradation specifications for Type A HMA in section 39-2.02.

39-1.02D(2) Aggregate Gradations

Aggregate gradation must be determined before the addition of asphalt binder and must include supplemental fines. Test for aggregate gradation under AASHTO T 27. Do not wash the coarse aggregate. Use a mechanical sieve shaker. Aggregate shaking time must not exceed 10 minutes for each coarse and fine aggregate portion.

Choose a target value within the target value limits shown in the tables titled "Aggregate Gradations."

Gradations are based on nominal maximum aggregate size.

39-1.02D(3) Aggregate Lime Treatments

39-1.02D(3)(a) General

If aggregate lime treatment is required, virgin aggregate must comply with the aggregate quality specifications.

Lime for treating aggregate must comply with section 24-2.02B.

Water for lime treatment of aggregate with lime slurry must comply with section 24-2.02C.

Notify the Engineer at least 24 hours before the start of aggregate treatment.

Do not treat RAP.

The lime ratio is the pounds of dry lime per 100 lb of dry virgin aggregate expressed as a percentage. Water content of slurry or untreated aggregate must not affect the lime ratio.

Coarse and fine aggregate fractions must have the lime ratio ranges shown in the following table:

Aggregate fractions	Lime ratio percent
Coarse	0.4–1.0
Fine	1.5–2.0
Combined	0.8–1.5

The lime ratio for fine and coarse aggregate must be within ±0.2 percent of the lime ratio in the accepted JMF. The lime ratio must be within ±0.2 percent of the authorized lime ratio when you combine the individual aggregate sizes in the JMF proportions. The lime ratio must be determined before the addition of RAP.

If marination is required, marinate treated aggregate in stockpiles from 24 hours to 60 days before using in HMA. Do not use aggregate marinated longer than 60 days.

Treated aggregate must not have lime balls or clods.

39-1.02D(3)(b) Dry Lime

If marination is required:

1. Treat and marinate coarse and fine aggregates separately
2. Treat the aggregate and stockpile for marination only once
3. Treat the aggregate separate from HMA production

Proportion dry lime by weight with an automatic continuous proportioning system.

If you use a batch-type proportioning system for HMA production, control proportioning in compliance with the specifications for continuous mixing plants. Use a separate dry lime aggregate treatment system for HMA batch mixing including:

1. Pugmill mixer
2. Controller
3. Weigh belt for the lime
4. Weigh belt for the aggregate

If using a continuous mixing plant for HMA production without lime marinated aggregates, use a controller that measures the blended aggregate weight after any additional water is added to the mixture. The controller must determine the quantity of lime added to the aggregate from the aggregate weigh belt input in connection with the manually input total aggregate moisture, the manually input target lime content, and the lime proportioning system output. Use a continuous aggregate weigh belt and pugmill mixer for lime treatment in addition to the weigh belt for the aggregate proportioning to asphalt binder in the HMA plant. If you use a water meter for moisture control for lime treatment, the meter must comply with Caltrans' Material Plant Quality Program manual.

At the time of mixing dry lime with aggregate, the aggregate moisture content must ensure complete lime coating. The aggregate moisture content must not cause aggregate to be lost between the point of weighing the combined aggregate continuous stream and the dryer. Add water to the aggregate for mixing and coating before dry lime addition. Immediately before mixing lime with aggregate, water must not visibly separate from the aggregate.

Mix aggregate, water, and dry lime with a continuous pugmill mixer with twin shafts. Immediately before mixing lime with aggregate, water must not visibly separate from the aggregate. Store dry lime in a uniform and free-flowing condition. Introduce dry lime to the pugmill in a continuous process. The introduction must occur after the aggregate cold feed and before the point of proportioning across a weigh belt and the aggregate dryer. Prevent loss of dry lime.

The pugmill must be equipped with paddles arranged to provide sufficient mixing action and mixture movement. The pugmill must produce a homogeneous mixture of uniformly coated aggregates at mixer discharge.

If the aggregate treatment process is stopped longer than 1 hour, clean the equipment of partially treated aggregate and lime.

Aggregate must be completely treated before introduction into the mixing drum.

39-1.02D(3)(c) Lime Slurry

For lime slurry aggregate treatment, treat aggregate separate from HMA production. Stockpile and marinate the aggregate.

Proportion lime and water with a continuous or batch mixing system.

Add lime to the aggregate as slurry consisting of mixed dry lime and water at a ratio of 1 part lime to from 2 to 3 parts water by weight. The slurry must completely coat the aggregate.

Immediately before mixing lime slurry with the aggregate, water must not visibly separate from the aggregate.

Proportion lime slurry and aggregate by weight in a continuous process.

39-1.02E Liquid Antistrip Treatment

Liquid antistrip must be from 0.25 to 1.0 percent by weight of asphalt binder. Do not use liquid antistrip as a substitute for asphalt binder.

Liquid antistrip total amine value must be 325 minimum when tested under ASTM D2074.

Use only 1 liquid antistrip type or brand at a time. Do not mix liquid antistrip types or brands.

Store and mix liquid antistrip under the manufacturer's instructions.

39-1.02F–39-1.02G Reserved

39-1.02H Hot Mix Asphalt Production

39-1.02H(1) General

Do not start HMA production before verification and authorization of JMF.

Before production, the HMA plant must have a current qualification under Caltrans' Materials Plant Quality Program.

For lime treated aggregate, the HMA plant must be equipped with a bag-house dust system. Material collected in the dust system must be returned to the mix.

Weighing and metering devices used for the production of HMA modified with additives must comply with the requirements of Caltrans' Material Plant Quality Program. If a loss-in-weight meter is used for dry HMA additive, the meter must have an automatic and integral material delivery control system for the refill cycle.

Calibrate the loss-in-weight meter by:

1. Including at least 1 complete system refill cycle during each calibration test run
2. Operating the device in a normal run mode for 10 minutes immediately before starting the calibration process
3. Isolating the scale system within the loss-in-weight feeder from surrounding vibration
4. Checking the scale system within the loss-in-weight feeder for accuracy before and after the calibration process and daily during mix production
5. Using a 15-minute or 250-pound-minimum test run size for a dry ingredient delivery rate of less than 1 ton per hour.
6. Complying with the limits of Table B, "Conveyor Scale Testing Extremes," in Caltrans' Material Plant Quality Program

Proportion aggregate by hot or cold-feed control.

Aggregate temperature must not be more than 375 degrees F when mixed with the asphalt binder.

Asphalt binder temperature must be from 275 to 375 degrees F when mixed with aggregate.

Mix HMA ingredients into a homogeneous mixture of coated aggregates.

HMA with or without RAP must not be more than 325 degrees F.

If method compaction is used, HMA must be produced at a temperature between 305 and 325 degrees F.

If you stop production for longer than 30 days, a production start-up evaluation is required unless waived by the Engineer.

39-1.02H(2) Liquid Antistrip

If 3 consecutive sets of recorded production data show actual delivered liquid antistrip weight is more than ±1 percent of the authorized mix design liquid antistrip weight, stop production and take corrective action.

If a set of recorded production data shows actual delivered liquid antistrip weight is more than ±2 percent of the authorized mix design liquid antistrip weight, stop production. If the liquid antistrip weight exceeds 1.2 percent of the asphalt binder weight, do not use the HMA represented by that data.

The continuous mixing plant controller proportioning the HMA must produce a production data log. The log consists of a series of data sets captured at 10-minute intervals throughout daily production. The data must be a production activity register and not a summation. The material represented by the data is the quantity produced 5 minutes before and 5 minutes after the capture time. For the duration of the Contract, collected data must be stored by the plant controller or a computer's memory at the plant.

The Engineer orders proportioning activities stopped for any of the following:

1. You do not submit data
2. You submit incomplete, untimely, or incorrectly formatted data
3. You do not take corrective actions
4. You take late or unsuccessful corrective actions
5. You do not stop production when proportioning tolerances are exceeded
6. You use malfunctioning or failed proportioning devices

If you stop production, notify the Engineer of any corrective actions taken before resuming.

39-1.02H(3) Reserved

39-1.02I Geosynthetic Pavement Interlayer

Geosynthetic pavement interlayer must comply with the specifications for pavement fabric, paving mat, paving grid, paving geocomposite grid, or geocomposite strip membrane as shown.

The asphalt binder for geosynthetic pavement interlayer must be PG 64-10, PG 64-16, or PG 70-10.

39-1.02J Tack Coat

Tack coat must comply with the specifications for asphaltic emulsion or asphalt binder. Choose the type and grade.

39-1.02K Miscellaneous Areas and Dikes

For miscellaneous areas and dikes:

1. Choose either the 3/8-inch or 1/2-inch aggregate gradation for Type A HMA.
2. Minimum asphalt binder content must be 6.8 percent for 3/8-inch aggregate and 6.0 percent for 1/2-inch aggregate. If you request and the Engineer authorizes, you may reduce the minimum asphalt binder content.
3. Use asphalt binder Grade PG 70-10.

For HMA used in miscellaneous areas and dikes, sections 39-1.01C, 39-1.01D, 39-1.02B, 39-1.02D(3), and 39-1.02E–J do not apply.

39-1.03 CONSTRUCTION

39-1.03A General

Do not place HMA on wet pavement or frozen surface.

You may deposit HMA in a windrow and load it in the paver if:

1. Paver is equipped with a hopper that automatically feeds the screed
2. Loading equipment can pick up the windrowed material and deposit it in the paver hopper without damaging base material
3. Activities for deposit, pickup, loading, and paving are continuous
4. HMA temperature in the windrow does not fall below 260 degrees F

HMA placed in a windrow on the roadway surface must not extend more than 250 feet in front of the loading equipment or material transfer vehicle.

You may place HMA in 1 or more layers on areas less than 5 feet wide and outside the traveled way, including shoulders. You may use mechanical equipment other than a paver for these areas. The equipment must produce uniform smoothness and texture.

HMA handled, spread, or windrowed must not stain the finished surface of any improvement, including pavement.

Do not use petroleum products such as kerosene or diesel fuel to release HMA from trucks, spreaders, or compactors.

HMA must be free of:

1. Segregation
2. Coarse or fine aggregate pockets
3. Hardened lumps

Where density samples are taken, backfill and compact holes with authorized material.

Complete finish rolling activities before the pavement surface temperature is:

1. Below 150 degrees F for HMA with unmodified binder
2. Below 140 degrees F for HMA with modified binder

39-1.03B Spreading and Compacting Equipment

39-1.03B(1) General

Paving equipment for spreading must be:

1. Self-propelled
2. Mechanical
3. Equipped with a screed or strike-off assembly that can distribute HMA the full width of a traffic lane
4. Equipped with a full-width compacting device
5. Equipped with automatic screed controls and sensing devices that control the thickness, longitudinal grade, and transverse screed slope

Install and maintain grade and slope references.

The screed must be heated and produce a uniform HMA surface texture without tearing, shoving, or gouging.

The paver must not leave marks such as ridges and indentations unless you can eliminate them by rolling.

Rollers must be equipped with a system that prevents HMA from sticking to the wheels. You may use a parting agent that does not damage the HMA or impede the bonding of layers.

In areas inaccessible to spreading and compacting equipment:

1. Spread the HMA by any means to obtain the specified lines, grades, and cross sections
2. Use a pneumatic tamper, plate compactor, or equivalent to achieve thorough compaction

39-1.03B(2) Material Transfer Vehicle

If a material transfer vehicle is specified, the material transfer vehicle must have sufficient capacity to prevent stopping the paver and must be capable of:

1. Either receiving HMA directly from trucks or using a windrow pickup head to load it from a windrow deposited on the roadway surface
2. Remixing the HMA with augers before transferring into the paver's receiving hopper or feed system
3. Transferring HMA directly into the paver's receiving hopper or feed system

39-1.03B(3) Method Compaction Equipment

For method compaction, each paver spreading HMA must be followed by 3 rollers:

1. One vibratory roller specifically designed to compact HMA. The roller must be capable of at least 2,500 vibrations per minute and must be equipped with amplitude and frequency controls. The roller's gross static weight must be at least 7.5 tons.

2. One oscillating type pneumatic-tired roller at least 4 feet wide. Pneumatic tires must be of equal size, diameter, type, and ply. The tires must be inflated to 60 psi minimum and maintained so that the air pressure does not vary more than 5 psi.
3. One steel-tired, 2-axle tandem roller. The roller's gross static weight must be at least 7.5 tons.

Each roller must have a separate operator. Rollers must be self-propelled and reversible.

39-1.03B(4)–39-1.03B(6) Reserved

39-1.03C Surface Preparation

39-1.03C(1) General

Before placing HMA, remove loose paving particles, dirt, and other extraneous material by any means including flushing and sweeping.

39-1.03C(2) Subgrade

Prepare subgrade to receive HMA under the sections for the material involved. Subgrade must be free of loose and extraneous material.

39-1.03C(3) Reserved

39-1.03C(4) Reserved

39-1.03C(5Reserved

39-1.03C(6) Tack Coat

Apply tack coat:

1. To existing pavement including planed surfaces
2. Between HMA layers
3. To vertical surfaces of:
   3.1. Curbs
   3.2. Gutters
   3.3. Construction joints

Before placing HMA, apply tack coat in 1 application at the minimum residual rate shown in the following table for the condition of the underlying surface:

Tack Coat Application Rates for HMA

HMA over:	Minimum Residual Rates (gal/sq yd)		
	CSS1/CSS1h, SS1/SS1h and QS1h/CQS1h Asphaltic Emulsion	CRS1/CRS2, RS1/RS2 and QS1/CQS1 Asphaltic Emulsion	Asphalt Binder and PMRS2/PMCRS2 and PMRS2h/PMCRS2h Asphaltic Emulsion
New HMA (between layers)	0.02	0.03	0.02
PCC and existing AC surfacing	0.03	0.04	0.03
Planed pavement	0.05	0.06	0.04

Notify the Engineer if you dilute asphaltic emulsion with water. The weight ratio of added water to asphaltic emulsion must not exceed 1 to 1.

Measure added water either by weight or volume under section 9-1.02 or you may use water meters from water districts, cities, or counties. If you measure water by volume, apply a conversion factor to determine the correct weight.

With each dilution, submit:

1. Weight ratio of water to bituminous material in the original asphaltic emulsion
2. Weight of asphaltic emulsion before diluting
3. Weight of added water
4. Final dilution weight ratio of water to asphaltic emulsion

Apply to vertical surfaces with a residual tack coat rate that will thoroughly coat the vertical face without running off.

If you request and the Engineer authorizes, you may:

1. Change tack coat rates
2. Omit tack coat between layers of new HMA during the same work shift if:
   2.1. No dust, dirt, or extraneous material is present
   2.2. Surface is at least 140 degrees F

Immediately in advance of placing HMA, apply additional tack coat to damaged areas or where loose or extraneous material is removed.

Close areas receiving tack coat to traffic. Do not track tack coat onto pavement surfaces beyond the job site.

Asphalt binder tack coat temperature must be from 285 to 350 degrees F when applied.

39-1.03C(7) Geosynthetic Pavement Interlayer

If specified, place geosynthetic pavement interlayer over a coat of asphalt binder. Place geosynthetic pavement interlayer in compliance with the manufacturer's instructions.

Before placing the geosynthetic pavement interlayer and asphalt binder:

1. Repair cracks 1/4 inch and wider, spalls, and holes in the pavement. Repairing cracks is change order work.
2. Clean the pavement of loose and extraneous material.

Immediately before placing the interlayer, apply 0.25 ± 0.03 gallon of asphalt binder per square yard of interlayer or until the fabric is saturated. Apply asphalt binder the width of the geosynthetic pavement interlayer plus 3 inches on each side. At an interlayer overlap, apply asphalt binder on the lower interlayer the same overlap distance as the upper interlayer.

Align and place the interlayer with no overlapping wrinkles, except a wrinkle that overlaps may remain if it is less than 1/2 inch thick. If the overlapping wrinkle is more than 1/2 inch thick, cut the wrinkle out and overlap the interlayer no more than 2 inches.

The minimum HMA thickness over the interlayer must be 0.12 foot thick including conform tapers. Do not place the interlayer on a wet or frozen surface.

Overlap the interlayer borders between 2 to 4 inches. In the direction of paving, overlap the following roll with the preceding roll at any break.

You may use rolling equipment to correct distortions or wrinkles in the interlayer.

If asphalt binder tracked onto the interlayer or brought to the surface by construction equipment causes interlayer displacement, cover it with a small quantity of HMA.

Before placing HMA on the interlayer, do not expose the interlayer to:

1. Traffic except for crossings under traffic control and only after you place a small HMA quantity
2. Sharp turns from construction equipment
3. Damaging elements

Pave HMA on the interlayer during the same work shift.

39-1.03D Longitudinal Joints

39-1.03D(1) General

Longitudinal joints in the top layer must match lane lines. Alternate the longitudinal joint offsets in the lower layers at least 0.5 foot from each side of the lane line. You may request other longitudinal joint placement patterns.

Vertical longitudinal joints are not allowed on the traveled way, regardless of thickness..

You must place HMA on adjacent traveled way lanes or shoulder so that at the end of each work shift the distance between the ends of HMA layers on adjacent lanes is from 5 to 10 feet. Place additional HMA along the transverse edge at each lane's end and along the exposed longitudinal edges between adjacent lanes. Hand rake and compact the additional HMA to form temporary conforms. You may place kraft paper or other authorized release agent under the conform tapers to facilitate the taper removal when paving activities resume.

If placing HMA against the edge of existing pavement, sawcut or grind the pavement straight and vertical along the joint and remove extraneous material.

Place HMA shoulder conform tapers concurrently with adjacent traveled way lane.

At the end of each work shift, a vertical joint between driveways and adjacent traveled way lanes of more than 0.15 foot is not allowed.

39-1.03D(2) Reserved

39-1.03E Reserved

39-1.03F Widening Existing Pavement

If widening existing pavement, construct new pavement structure to match the elevation of the existing pavement's edge before placing HMA over the existing pavement.

39-1.03G Shoulders, Medians, and Other Road Connections

Until the adjoining through lane's top layer has been paved, do not pave the top layer of:

1. Shoulders
2. Tapers
3. Transitions
4. Road connections
5. Driveways
6. Curve widenings
7. Chain control lanes
8. Turnouts
9. Turn pockets

If the number of lanes changes, pave each through lane's top layer before paving a tapering lane's top layer. Simultaneous to paving a through lane's top layer, you may pave an adjoining area's top layer, including shoulders. Do not operate spreading equipment on any area's top layer until completing final compaction.

If shoulders or median borders are shown, pave shoulders and median borders adjacent to the lane before opening a lane to traffic.

If shoulder conform tapers are shown, place conform tapers concurrently with the adjacent lane's paving.

If a driveway or a road connection is shown, place additional HMA along the pavement's edge to conform to road connections and driveways. Hand rake, if necessary, and compact the additional HMA to form a smooth conform taper.

39-1.03H Leveling

Section 39-1.03H applies if a bid item for hot mix asphalt (leveling) is shown on the Bid Item List.

Fill and level irregularities and ruts with HMA before spreading HMA over the base, existing surfaces, or bridge decks. You may use mechanical equipment other than a paver for these areas. The equipment must produce uniform smoothness and texture. HMA used to change an existing surface's cross slope or profile is not paid for as hot mix asphalt (leveling).

39-1.03I Miscellaneous Areas and Dikes

Prepare the area to receive HMA for miscellaneous areas and dikes, including excavation and backfill as needed.

Spread miscellaneous areas in 1 layer and compact to the specified lines and grades.

In median areas adjacent to slotted median drains, each layer of HMA must not exceed 0.20 foot maximum compacted thickness.

The finished surface must be:

1. Textured uniformly
2. Compacted firmly
3. Without depressions, humps, and irregularities

39-1.03J Replace Asphalt Concrete Surfacing

Where replace asphalt concrete surfacing is shown, remove existing asphalt concrete surfacing and replace with HMA. The Engineer determines the exact limits of asphalt concrete surfacing to be replaced.

Replace asphalt concrete in a lane before the lane is specified to be opened to traffic.

Before removing asphalt concrete, outline the replacement area and cut neat lines with a saw or grind to full depth of the existing asphalt concrete. Do not damage asphalt concrete and base remaining in place.

If the base is excavated beyond the specified plane, replace it with HMA. The County does not pay for this HMA.

Do not use a material transfer vehicle if replace asphalt concrete surfacing is specified.

39-1.03K–39-1.03N Reserved

39-1.03O Compaction

39-1.03O(1) General

Rolling must leave the completed surface compacted and smooth without tearing, cracking, or shoving.

If a vibratory roller is used as a finish roller, turn the vibrator off.

Do not open new HMA pavement to traffic until the surface temperature is below 130 degrees F.

If the surface to be paved is both in sunlight and shade, pavement surface temperatures are taken in the shade.

39-1.03O(2) Method Compaction

Use method compaction for any of the following conditions:

1. HMA pavement thickness shown is less than 0.15 foot
2. Replace asphalt concrete surfacing
3. Leveling courses
4. Areas the Engineer determines conventional compaction and compaction measurement methods are impeded

HMA compaction coverage is the number of passes needed to cover the paving width. A pass is 1 roller's movement parallel to the paving in either direction. Overlapping passes are part of the coverage being made and are not a subsequent coverage. Do not start a coverage until completing the prior coverage.

Method compaction must consist of performing:

1. Breakdown compaction of each layer with 3 coverages using a vibratory roller. The speed of the vibratory roller in miles per hour must not exceed the vibrations per minute divided by 1,000. If the HMA layer thickness is less than 0.08 foot, turn the vibrator off.
2. Intermediate compaction of each layer of HMA with 3 coverages using a pneumatic-tired roller at a speed not to exceed 5 mph.
3. Finish compaction of HMA with 1 coverage using a steel-tired roller.

Start rolling at the lower edge and progress toward the highest part.

The Engineer may order fewer coverages if the layer thickness of HMA is less than 0.15 foot.

39-1.03O(3)–39-1.03O(5) Reserved

39-1.03P Smoothness Corrections

If the final surface of the pavement does not comply with the smoothness specifications, grind the pavement to within specified tolerances, remove and replace it, or place an overlay of HMA. Do not start corrective work until your method is authorized.

Do not use equipment with carbide cutting teeth to grind the pavement unless authorized.

Smoothness correction of the final pavement surface must leave at least 75 percent of the specified HMA thickness. If ordered, core the pavement at the locations determined by the Engineer. Coring, including traffic control, is change order work. Remove and replace deficient pavement areas where the overlay thickness is less than 75 percent of the thickness specified as determined by the Engineer.

Corrected HMA pavement areas must be uniform rectangles with edges:

1. Parallel to the nearest HMA pavement edge or lane line
2. Perpendicular to the pavement centerline

On ground areas not to be overlaid with OGFC, apply fog seal coat under section 37-2.

Where corrections are made, retest the corrected area with the straightedge.

39-1.03Q Reserved

39-1.04 PAYMENT

Geosynthetic pavement interlayer is measured by the square yard for the actual pavement area covered.

If tack coat, asphalt binder, and asphaltic emulsion are paid as separate bid items, their bid items are measured under section 92 or section 94.

The County does not adjust the unit price for an increase or decrease in the tack coat quantity.

HMA of the type shown in the Bid Item List is measured based on the combined mixture weight. If recorded batch weights are printed automatically, the bid item for HMA is measured by using the printed batch weights, provided:

1. Total aggregate and supplemental fine aggregate weight per batch is printed. If supplemental fine aggregate is weighed cumulatively with the aggregate, the total aggregate batch weight must include the supplemental fine aggregate weight.
2. Total asphalt binder weight per batch is printed.
3. Each truckload's zero tolerance weight is printed before weighing the first batch and after weighing the last batch.
4. Time, date, mix number, load number and truck identification is correlated with a load slip.
5. Copy of the recorded batch weights is certified by a licensed weigh master and submitted.

Place hot mix asphalt dike of the type shown in the Bid Item List is measured along the completed length. Payment for the HMA used to construct the dike is not included in the payment for place hot mix asphalt dike.

Place hot mix asphalt (miscellaneous areas) is measured as the in-place compacted area. Payment for the HMA used for miscellaneous areas is not included in the payment for place hot mix asphalt (miscellaneous areas).

If replace asphalt concrete surfacing is shown, the bid item for replace asphalt concrete is measured based on the specified dimensions and any adjustments ordered.

The County does not adjust the unit price for an increase or decrease in the prepaving grinding day quantity.

The County reduces payment for noncompliance of HMA density based on the factors shown in the following table:

Reduced Payment Factors for Percent of Maximum Theoretical Density

HMA percent of maximum theoretical density	Reduced payment factor	HMA percent of maximum theoretical density	Reduced payment factor
91.0	0.0000	97.0	0.0000
90.9	0.0125	97.1	0.0125
90.8	0.0250	97.2	0.0250
90.7	0.0375	97.3	0.0375
90.6	0.0500	97.4	0.0500
90.5	0.0625	97.5	0.0625
90.4	0.0750	97.6	0.0750
90.3	0.0875	97.7	0.0875
90.2	0.1000	97.8	0.1000
90.1	0.1125	97.9	0.1125
90.0	0.1250	98.0	0.1250
89.9	0.1375	98.1	0.1375
89.8	0.1500	98.2	0.1500
89.7	0.1625	98.3	0.1625
89.6	0.1750	98.4	0.1750
89.5	0.1875	98.5	0.1875
89.4	0.2000	98.6	0.2000
89.3	0.2125	98.7	0.2125
89.2	0.2250	98.8	0.2250
89.1	0.2375	98.9	0.2375
89.0	0.2500	99.0	0.2500
< 89.0	Remove and replace	> 99.0	Remove and replace

Replace the section 39-2 of the RSS with:

39-2 TYPE A HOT MIX ASPHALT

39-2.01 GENERAL

39-2.01A Summary

Section 39-2 includes specifications for producing and placing Type A hot mix asphalt.

39-2.01B Definitions

Reserved

39-2.01C Submittals

39-2.01C(1) General

Reserved

39-2.01C(2) Job Mix Formula

The JMF must be based on an HMA mix design determined as described in the Superpave Mix Design SP-2 Manual by the Asphalt Institute.

39-2.01C(3) Reclaimed Asphalt Pavement

Submit QC test results for RAP gradation with the combined aggregate gradation within 2 business days of taking RAP samples during HMA production.

39-2.01C(4)–39-2.01C(6) Reserved

39-2.01D Quality Control and Assurance

39-2.01D(1) General

Reserved

39-2.01D(2) Quality Control

39-2.01D(2)(a) General

Reserved

39-2.01D(2)(b) Aggregate

Test the quality characteristics of aggregate under the test methods and frequencies shown in the following table:

Aggregate Testing Frequencies

Quality characteristic	Test method	Minimum testing frequency
Gradation[a]	AASHTO T 27	1 per 750 tons and any remaining part
Sand equivalent[b, c]	AASHTO T 176	
Moisture content[d]	AASHTO T 329	
Crushed particles	AASHTO T 335	1 per 10,000 tons or 2 per project whichever is greater
Los Angeles rattler	AASHTO T 96	
Flat and elongated particles	ASTM D4791	
Fine aggregate angularity	AASHTO T 304 Method A	

[a]If RAP is used, test the combined aggregate gradation under California Test 384.
[b]Reported value must be the average of 3 tests from a single sample.
[c]Use of a sand reading indicator is required as shown in AASHTO T 176, Figure 1. Sections 4.7, 4.8, 7.1.2, 8.4.2 and 8.4.3 do not apply.
[d]Test at continuous mixing plants only. If RAP is used, test the RAP moisture content at continuous mixing plant and batch mixing plant.

For lime treated aggregate, test aggregate before treatment and test for gradation and moisture content during HMA production.

39-2.01D(2)(c) Reclaimed Asphalt Pavement

Sample and test processed RAP at a minimum frequency of 1 sample per 1000 tons with a minimum of 6 samples per fractionated stockpile. If the fractionated stockpile has not been augmented, the 3 RAP samples taken and tested for mix design may be part of this minimum sample requirement. If a fractionated RAP stockpile is augmented, sample and test processed RAP quality characteristics at a minimum frequency of 1 sample per 500 tons of augmented RAP.

The combined RAP sample when tested under AASHTO T 164 must be within ±2.0 percent of the average asphalt binder content reported on page 4 of your Contractor Hot Mix Asphalt Design Data form. If new fractionated RAP stockpiles are required, the average binder content of the new fractionated RAP stockpile must be within ±2.0 percent of the average binder reported on page 4 of your Contractor Hot Mix Asphalt Design Data form.

The combined RAP sample when tested under AASHTO T 209 must be within ±0.06 of the average maximum specific gravity reported on page 4 of your Contractor Hot Mix Asphalt Design Data form.

During HMA production, sample RAP twice daily and perform QC testing for:

1. Aggregate gradation at least once a day under California Test 384
2. Moisture content at least twice a day

39-2.01D(2)(d) Hot Mix Asphalt Production

Test the quality characteristics of HMA under the test methods and frequencies shown in the following table:

Hot Mix Asphalt Testing Frequencies

Quality characteristic	Test method	Minimum testing frequency
Asphalt binder content	AASHTO T 308 Method A	1 per 750 tons and any remaining part
HMA moisture content	AASHTO T 329	1 per 2,500 tons but not less than 1 per paving day
Air voids content	AASHTO T 269	1 per 4,000 tons or 2 every 5 paving days, whichever is greater
Voids in mineral aggregate	SP-2 Asphalt Mixture Volumetrics	1 per 10,000 tons or 2 per project whichever is greater
Dust proportion	SP-2 Asphalt Mixture Volumetrics	
Density of core	California Test 375	2 per paving day
Nuclear gauge density	California Test 375	3 per 250 tons or 3 per paving day, whichever is greater
Hamburg wheel track	AASHTO T 324 (Modified)	1 per 10,000 tons or 1 per project, whichever is greater
Moisture susceptibility	AASHTO T 283	

39-2.01D(3)–39-2.01D(4) Reserved

39-2.01D(5) County Acceptance

The County accepts Type A HMA based on compliance with:

1. Aggregate quality requirements shown in the following table:

Aggregate Quality

Quality characteristic	Test method	Requirement
Aggregate gradation[a]	AASHTO T 27	JMF ± Tolerance
Percent of crushed particles Coarse aggregate (min, %) One-fractured face Two-fractured faces Fine aggregate (min, %) (Passing No. 4 sieve and retained on No. 8 sieve.) One fractured face	AASHTO T 335	 95 90 70
Los Angeles Rattler (max, %) Loss at 100 Rev. Loss at 500 Rev.	AASHTO T 96	 12 40
Sand equivalent (min.)[b, c]	AASHTO T 176	47
Flat and elongated particles (max, % by weight at 5:1)	ASTM D4791	10
Fine aggregate angularity (min, %)[d]	AASHTO T 304 Method A	45

[a]The Engineer determines combined aggregate gradations containing RAP under California Test 384.
[b]Reported value must be the average of 3 tests from a single sample.
[c]Use of a sand reading indicator is required as shown in AASHTO T 176, Figure 1. Sections 4.7, 4.8, 7.1.2, 8.4.2 and 8.4.3 do not apply.
[d] The Engineer waives this specification if HMA contains 10 percent or less of nonmanufactured sand by weight of total aggregate. Manufactured sand is fine aggregate produced by crushing rock or gravel.

2. If RAP is used, RAP quality requirements shown in the following table:

Reclaimed Asphalt Pavement Quality

Quality characteristic	Test method	Requirement
Binder content (% within the average value reported)	AASHTO T 164	±2.0
Specific gravity (within the average value reported)	AASHTO T 209	±0.06

3. In-place HMA quality requirements shown in the following table:

Type A HMA Acceptance In Place

Quality characteristic	Test method	Requirement
Asphalt binder content (%)	AASHTO T 308 Method A	JMF -0.3, +0.5
HMA moisture content (max, %)	AASHTO T 329	1
Air voids content at N_{design} (%)[a, b]	AASHTO T 269	4 ± 1.5
Voids in mineral aggregate on plant-produced HMA (min, %)[a]	SP-2 Asphalt Mixture Volumetrics[c]	
Gradation:		
No. 4		15.5–18.5
3/8-inch		14.5–17.5
1/2-inch		13.5–16.5
3/4-inch		12.5–15.5
1-inch		
with NMAS[g] = 1-inch		12.5–15.5
with NMAS[g] = 3/4-inch		13.5–16.5
Dust proportion	SP-2 Asphalt Mixture Volumetrics	0.6–1.3
Density of core (% of max theoretical density)[e, f]	California Test 375	91–97
Hamburg wheel track (min number of passes at 0.5-inch rut depth)	AASHTO T 324 (Modified)	
Binder grade:		
PG 58		10,000
PG 64		15,000
PG 70		20,000
PG 76 or higher		25,000
Hamburg wheel track (min number of passes at inflection point)	AASHTO T 324 (Modified)	
Binder grade:		
PG 58		10,000
PG 64		10,000
PG 70		12,500
PG 76 or higher		15,000
Moisture susceptibility (min, psi, dry strength)	AASHTO T 283	100
Moisture susceptibility (min, psi, wet strength)	AASHTO T 283	70

[a]Prepare 3 briquettes. Report the average of 3 tests.
[b]The Engineer determines the bulk specific gravity of each lab-compacted briquette under AASHTO T 275, Method A, and theoretical maximum specific gravity under AASHTO T 209, Method A.
[c]Determine bulk specific gravity under AASHTO T 275, Method A.
[d]The Engineer determines the laboratory-prepared HMA value for mix design verification only.
[e]The Engineer determines percent of theoretical maximum density under California Test 375 except the Engineer uses:

1. AASHTO T 275 to determine in-place density of each density core
2. AASHTO T 209, Method A to determine theoretical maximum density instead of calculating test maximum density

[f]The Engineer determines theoretical maximum density under AASHTO T 209, Method A, at the frequency specified in California Test 375, Part 5. D.
[g]NMAS means nominal maximum aggregate size.

39-2.02 MATERIALS

39-2.02A General

Reserved

39-2.02B Mix Design

The mix design must comply with the requirements shown in the following table:

Type A HMA Mix Design Requirements

Quality characteristic	Test method	Requirement
Air voids content (%)	AASHTO T 269[a]	$N_{initial}$ > 8.0 N_{design} = 4.0 (N_{design} = 5.0 for 1-inch aggregate) N_{max} > 2.0
Gyration compaction (no. of gyrations)	AASHTO T 312	$N_{initial}$ = 8 N_{design} = 85.0 N_{max} = 130
Voids in mineral aggregate (min, %)[b] Gradation: No. 4 3/8-inch 1/2-inch 3/4-inch 1-inch with NMAS[e] = 1-inch with NMAS[e] = 3/4-inch	SP-2 Asphalt Mixture Volumetrics	 16.5–19.5 15.5–18.5 14.5–17.5 13.5–16.5 13.5–16.5 14.5–17.5
Dust proportion	SP-2 Asphalt Mixture Volumetrics	0.6–1.3
Hamburg wheel track (min number of passes at 0.5-inch rut depth) Binder grade: PG 58 PG 64 PG 70 PG 76 or higher	AASHTO T 324 (Modified)[c]	 10,000 15,000 20,000 25,000
Hamburg wheel track (min number of passes at the inflection point) Binder grade: PG 58 PG 64 PG 70 PG 76 or higher	AASHTO T 324 (Modified)[c]	 10,000 10,000 12,500 15,000
Moisture susceptibility, dry strength (min, psi)	AASHTO T 283[c]	100
Moisture susceptibility, wet strength (min, psi)	AASHTO T 283[c, d]	70

[a]Calculate the air voids content of each specimen using AASHTO T 275, Method A, to determine bulk specific gravity. Use AASHTO T 209, Method A, to determine theoretical maximum specific gravity. Use a digital manometer and pycnometer when performing AASHTO T 209.
[b]Measure bulk specific gravity using AASHTO T 275, Method A.
[c]Test plant produced HMA.
[d]Freeze thaw required.
[e]NMAS means nominal maximum aggregate size.

For HMA mixtures using RAP, the maximum binder replacement is 25.0 percent for surface course and 40.0 percent for lower courses.

For HMA with a binder replacement percent less than or equal to 25 percent of your specified OBC, you may request that the performance graded asphalt binder grade with upper and lower temperature classifications be reduced by 6 degrees C from the specified grade.

For HMA with a binder replacement greater than 25 percent of your specified OBC and less than or equal to 40 percent of OBC, you must use a performance graded asphalt binder grade with upper and lower temperature classifications reduced by 6 degrees C from the specified grade.

39-2.02C Asphalt Binder

The grade of asphalt binder for Type A HMA must be 64-10.

39-2.02D Aggregates

39-2.02D(1) General

Before the addition of asphalt binder and lime treatment, the aggregate must comply with the requirements shown in the following table:

Aggregate Quality

Quality characteristic	Test method	Requirement
Percent of crushed particles Coarse aggregate (min, %) One-fractured face Two-fractured faces Fine aggregate (min, %) (Passing No. 4 sieve and retained on No. 8 sieve.) One fractured face	AASHTO T 335	 95 90 70
Los Angeles Rattler (max, %) Loss at 100 Rev. Loss at 500 Rev.	AASHTO T 96	 12 40
Sand equivalent (min)[a, b]	AASHTO T 176	47
Flat and elongated particles (max, % by weight at 5:1)	ASTM D4791	10
Fine aggregate angularity (min, %)[c]	AASHTO T 304 Method A	45

[a]Reported value must be the average of 3 tests from a single sample.
[b]Use of a Sand Reader Indicator is required as shown in AASHTO T 176, Figure 1. Sections 4.7, 4.8, 7.1.2, 8.4.2 and 8.4.3 do not apply.
[c]The Engineer waives this specification if HMA contains 10 percent or less of nonmanufactured sand by weight of total aggregate, except if your JMF fails verification. Manufactured sand is fine aggregate produced by crushing rock or gravel.

39-2.02D(2) Aggregate Gradations

The aggregate gradations for Type A HMA must comply with the requirements shown in the following table:

Aggregate Gradation Requirements

Type A HMA pavement thickness shown	Gradation
0.10 foot	3/8 inch
Greater than 0.10 to less than 0.20 foot	1/2 inch
0.20 foot to less than 0.25 foot	3/4 inch
0.25 foot or greater	3/4 inch or 1 inch

Aggregate gradation must be within the target value limits for the specified sieve size shown in the following tables:

Aggregate Gradations
(Percentage Passing)

1-inch

Sieve size	Target value limit	Allowable tolerance
1"	100	--
3/4"	88–93	TV ± 5
1/2"	72–85	TV ± 6
3/8"	55–70	TV ± 6
No. 4	35–52	TV ± 7
No. 8	22–40	TV ± 5
No. 30	8–24	TV ± 4
No. 50	5–18	TV ± 4
No. 200	3–7	TV ± 2

3/4-inch

Sieve size	Target value limit	Allowable tolerance
1"	100	--
3/4"	90–98	TV ± 5
1/2"	70–90	TV ± 6
No. 4	42–58	TV ± 5
No. 8	29–43	TV ± 5
No. 30	10–23	TV ± 4
No. 200	2–7	TV ± 2

1/2-inch

Sieve sizes	Target value limit	Allowable tolerance
3/4"	100	--
1/2"	95–98	TV ± 5
3/8"	72–95	TV ± 5
No. 4	52–69	TV ± 5
No. 8	35–55	TV ± 5
No. 30	15–30	TV ± 4
No. 200	2–8	TV ± 2

3/8-inch

Sieve sizes	Target value limits	Allowable tolerance
1/2"	100	--
3/8"	95–98	TV ± 5
No. 4	55–75	TV ± 5
No. 8	30–50	TV ± 5
No. 30	15–35	TV ± 5
No. 200	2–9	TV ± 2

No. 4

Sieve sizes	Target value limits	Allowable tolerance
3/8"	100	--
No. 4	95–98	TV ± 5
No. 8	70–80	TV ± 6
No. 30	34–45	TV ± 5
No. 200	2–12	TV ± 4

39-2.02E Reclaimed Asphalt Pavement

You may substitute RAP for part of the virgin aggregate in a quantity up to a maximum of 25 percent of the aggregate blend.

Provide enough space for meeting all RAP handling requirements at your facility. Provide a clean, graded base, well drained area for stockpiles.

If RAP is from multiple sources, blend the RAP thoroughly and completely before fractionating.

For RAP substitution of 15 percent or less, fractionation is not required.

For RAP substitution greater than 15 percent, fractionate RAP stockpiles into 2 sizes, a coarse fraction RAP retained on 3/8-inch sieve, and a fine fraction RAP passing 3/8-inch sieve.

The RAP fractionation must comply with the requirements shown in the following table:

RAP Stockpile Fractionation Gradation Requirements

Quality characteristic	Test method	Requirement
Coarse (% passing the 1-inch sieve)	California Test 202[a]	100
Fine (% passing the 3/8-inch sieve)	California Test 202[a]	98–100

[a]Maximum mechanical shaking time is 10 minutes

You may use the coarse fractionated stockpile, the fine fractionated stockpile, or a combination of the coarse and fine fractionated stockpiles.

Isolate the processed RAP stockpiles from other materials. Store processed RAP in conical or longitudinal stockpiles. Processed RAP must not be agglomerated or be allowed to congeal in large stockpiles.

39-2.02F Hot Mix Asphalt Production

If RAP is used, the asphalt plant must automatically adjust the virgin asphalt binder to account for RAP percentage and RAP binder.

During production, you may adjust hot or cold-feed proportion controls for virgin aggregate and RAP. RAP must be within ±3 of RAP percentage shown in your Contractor Job Mix Formula Proposal form without exceeding 25 percent.

The aggregate temperature requirements do not apply to RAP.

39-2.03 CONSTRUCTION

Spread Type A HMA at the atmospheric and surface temperatures shown in the following table:

Minimum Atmospheric and Surface Temperatures for Type A HMA

Compacted layer thickness, feet	Atmospheric,°F		Surface,°F	
	Unmodified asphalt binder	Modified asphalt binder	Unmodified asphalt binder	Modified asphalt binder
< 0.15	55	50	60	55
≥ 0.15	45	45	50	50

For method compaction, the maximum compacted layer thickness must be 0.25 foot.

For Type A HMA placed under method compaction, if the asphalt binder is:

1. Unmodified, complete:
   1.1. 1st coverage of breakdown compaction before the surface temperature drops below 250 degrees F
   1.2. Breakdown and intermediate compaction before the surface temperature drops below 190 degrees F
   1.3. Finish compaction before the surface temperature drops below 150 degrees F
2. Modified, complete:

2.1. 1st coverage of breakdown compaction before the surface temperature drops below 240 degrees F
2.2. Breakdown and intermediate compaction before the surface temperature drops below 180 degrees F
2.3. Finish compaction before the surface temperature drops below 140 degrees F

If you request and the Engineer authorizes, you may cool Type A HMA with water when rolling activities are complete. Apply water under section 17.

39-2.04 PAYMENT

Not Used

Replace the section 39-7 of the RSS with:

39-7 MINOR HOT MIX ASPHALT

39-7.01 GENERAL

39-7.01A Summary

Section 39-7 includes specifications for producing and placing minor hot mix asphalt.

Minor HMA must comply with section 39-2 except as specified in this section 39-7.

39-7.01B Definitions

Reserved

39-7.01C Submittals

The QC plan and test results in sections 39-1.01C(3) and 39-1.01C(4), do not apply.

39-7.01D Quality Control and Assurance

39-7.01D(1) General

For minor HMA, the JMF renewal, and prepaving meeting specifications in sections 39-1.01D(4), and 39-1.01D(7) do not apply.

Test pavement smoothness with a 12 foot straightedge.

39-7.01D(2) Quality Control

For minor HMA, section 39-2.01D(2) applies except testing for compliance with the following quality characteristics is not required:

1. Flat and elongated particles
2. Fine aggregate angularity
3. Hamburg wheel track
4. Moisture susceptibility

39-7.01D(3) County Acceptance

The County accepts minor HMA under section 39-2.01D(5) except compliance with the following quality characteristics is not required:

1. Flat and elongated particles
2. Fine aggregate angularity
3. Hamburg wheel track
4. Moisture susceptibility

39-7.02 MATERIALS

39-7.02A General

Reserved

39-7.02B Mix Design

The mix design for minor HMA must comply with section 39-2.02B except the Hamburg wheel track and moisture susceptibility requirements do not apply.

39-7.02C Asphalt Binder

The grade of asphalt binder for minor HMA must be PG-64-10 or PG-64-16.

39-7.02D Liquid Antistrip Treatment

Treat minor HMA with liquid antistrip. Liquid antistrip treatment is not required if you submit AASHTO T 283 and AASHTO T 324 (Modified) test results showing compliance with section 39-2.02B. The tests must be dated within 12 months of submittal.

39-7.03 CONSTRUCTION

Not Used

39-7.04 PAYMENT

Not Used

^^

DIVISION VI STRUCTURES

48 TEMPORARY STRUCTURES

Replace "Reserved" in section 48-6 with:

48-6 TEMPORARY STRUCTURE

48-6.01 GENERAL

48-6.01A Summary

Section 48-6 includes specifications for constructing a temporary bridge for construction traffic, local agricultural equipment and emergency vehicles access.

The Temporary Structure must be placed within the approved temporary construction easement, including cut and fill slopes, and at the approximate location shown. Any deviation from this location must be approved before starting construction.

Submit a proposed detour layout alignment and profile with your shop drawings.

You must design, construct, and maintain temporary bridge that:

1. Is safe and adequate
2. Provides the necessary rigidity
3. Supports the loads imposed
4. Produces a finished structure meeting all design criteria

During nonworking hours, prevent access to the temporary structure and access road with a chain and padlock. Provide fifteen (15) keys to the padlock to the Engineer. Local farmers and emergency vehicles will receive these keys to utilize the temporary structure during nonworking hours.

48-6.01B Definitions

Not Used.

48-6.01C Submittals

48-6.01C(1) General

Submit a certificate of compliance for each delivery of structural composite lumber used in a temporary structure.

Submit a letter of certification that certifies all components of the manufactured assemblies are used in compliance with the manufacturer's recommendations.

If requested (1) submit manufacturer's data for manufactured assemblies to verify manufacturer's recommendations or (2) perform tests demonstrating adequacy of the proposed assemblies.

Submit a letter of certification for all temporary structure members with field welded splices. The letter must certify that all welding and NDT, including visual inspection, comply with the Contract and the welding standard shown on the shop drawings. The letter must be signed by an engineer who is registered as a civil engineer in the State. Submit the letter before placing any concrete on the temporary structure being certified.

Submit a welding certification for temporary structure with previously welded splices. The certification must:

1. Itemize the testing and inspection methods used
2. Include tracking and identifying documents for previously welded members
3. Be signed by an engineer who is registered as a civil engineer in the State
4. Be submitted before erecting the members

48-6.01C(2) Shop Drawings

Submit shop drawings with supporting calculations for temporary structure.

Shop drawings and calculations must be signed by an engineer who is registered as a civil engineer in the State.

Submit 6 sets of temporary structure drawings and 2 sets of design calculations. Include the following:

1. Details of erection and removal activities.
2. Methods and sequences of erection and removal, including equipment.
3. Details for the stability of temporary structure during all stages of erection and removal activities.
4. Assumed soil bearing values for temporary structure footings.
5. Grade (E-value), species, and type of any structural composite lumber. Include manufacturer's tabulated working stress values for the lumber.
6. Grade and material properties of any structural steel, aluminum, or reinforced concrete used for members in the Temporary Bridge.
7. Design calculations including stresses and deflections in load carrying members.
8. Provisions for complying with temporary bracing requirements.
9. Welding standard used for welded members and welded connection (both shop and field welds).

48-6.01D Quality Control and Assurance

48-6.01D(1) Welding and Nondestructive Testing

Welding must comply with AWS D1.1 or other recognized welding standard except (1) for previously welded splices and (2) if fillet welds are used where load demands are 1,000 lb or less per inch for each 1/8 inch of fillet weld.

Perform NDT on splices made by field welding at the job site. You may use UT or RT. Each field weld and any repair made to a previously welded splice must be tested. You must select locations for testing. The length of a splice weld where NDT is to be performed must be a cumulative weld length equal to 25 percent of the original splice weld length. The cover pass must be ground smooth at test locations. Acceptance criteria must comply with the specifications for cyclically loaded non-tubular connections subject to tensile stress in clause 6 of AWS D1.1. If repairs are required in a portion of the weld, perform additional NDT on the repaired sections. The NDT method chosen must be used for an entire splice evaluation, including any repairs.

For previously welded splices, you must determine and perform all necessary testing and inspection required to certify the ability of the temporary structure members to sustain the design stresses.

48-6.01D(2) Design Criteria

48-6.01D(2)(a) General

The Temporary Bridge must:

1. Provide the detour layout alignment and profile proposed and submitted..

2. Provide a traveled way width for one – 12’ traffic lane and two – 2.5’ shoulders (clear width of 17’).

3. Clear span the channel with a minimum span length of 85' measured between abutment faces. Contractor to field verify minimum length works.
4. Provide a minimum bridge barrier 32” tall with a TL-1 crash rating under NCHRP Report 350. Secured type K temporary railing or other approved system may be used.
5. Provide a non-slip surface for both pedestrians and equipment.
6. Not encroach into the channel nor its Temporary fills extend into the channel or below Elevation 172.0' and shall be removed after construction is complete.
7. Meet all permit requirements.

The County does not adjust payment for a Temporary Bridge with a greater clear width to assist in your construction of the project.

48-6.01D(2)(b) Loads

Design the Temporary Bridge under AASHTO LRFD Bridge Design Specifications 6th Edition and California Amendments (dated March 2014), with the following exceptions and modifications.

The loads for the Temporary Bridge must be combined under the load combinations specified in the code to determine the load combinations creating the highest stresses and deflections.

For vertical loads, all factored dead loads and AASHTO legal vehicles (HL-93 plus lane load) loads combinations must be considered including any specialized hauling vehicles or construction vehicles which will cross the Temporary Bridge during Construction. Impact must be included to all vehicular loads.

The County does not adjust payment for a Temporary Bridge with a greater vehicle load to assist in your construction of the project. If construction loads beyond the legal vehicle (HL-93 plus lane load) are to be considered, they must be applied as in conformance with the Strength II load combination.

For lateral loads in the longitudinal direction of the Temporary Bridge, the following combinations of lateral loads must be considered and the bridge must be designed to the larger of these:

1. Braking force of the applied vehicle live loads equal to 15 percent of the vehicle live load applied at 6 foot above the deck surface of the Temporary Bridge plus Wind Loads.
2. 25 percent of the Temporary Bridge dead load, factored by 1.0, and applied at the center of gravity of the bridge.

For lateral loads in the transverse direction of the Temporary Bridge, the following combinations of lateral loads must be considered and the bridge must be designed to the larger of these:

1. The lateral load combinations listed the Caltrans’ Falsework Manual.
2. Wind Loads.
3. 25 percent of the Temporary Bridge dead load, factored by 1.0, and applied at the center of gravity of the bridge.

Wind loads must be applied according to AASHTO LRFD Bridge Design Specifications 6th Edition and the Caltrans Amendments.

48-6.01D(2)(c) Stresses, Loadings, and Deflections

The capacities of all members and connections of the Temporary Bridge must be based on AASHTO LRFD Bridge Design Specifications 6thEdition and its Amendments with appropriate reduction factors, with the following exceptions and modifications.

Design timber connections under the Caltrans’ Falsework Manual.

Expect for flexural compressive stress, structural steel members and connections may be designed under LRFD criteria from the AISC Steel Manual.

The Temporary Bridge must be mechanically connected to its foundation. The mechanical connections must be capable of resisting the lateral temporary structure design forces. Friction forces developed

between the Temporary Bridge and its foundations cannot not be used to resist lateral forces and are not considered as an effective mechanical connection. The mechanical connections must be designed to tolerate adjustments to the Temporary Bridge during its use as a detour.

48-6.01D(2)(c)(i) Manufactured Assemblies

Do not exceed the manufacturer's recommendations for loadings and deflections on jacks, brackets, columns, joists, and other manufactured devices.

48-6.02 MATERIALS

Not Used

48-6.03 CONSTRUCTION

48-6.03A General

Structure excavation and backfill must comply with section 19-3.

Install temporary bracing as necessary to withstand all imposed loads during erection, construction, and removal of the Temporary Bridge.

The materials used in the Temporary Bridge must be of the quality necessary to sustain the stresses required by the Temporary Bridge design.

Ground or surface water may be encountered. Dewatering must comply with section 19-3.03.

48-6.03B Foundations

Construct the Temporary Bridge on solid footings capable of supporting the Temporary Bridge loads. Protect footings from softening and undermining. The Engineer may order you to verify the design soil bearing values do not exceed the soil capacity using load testing.

You may place the Temporary Bridge foundation pads before shop drawings are authorized.

The use of temporary structure piles is not permitted.

48-6.03C Removal

Remove the Temporary Bridge such that portions of the Temporary Bridge not yet removed remain stable at all times.

Completely remove fills placed for the temporary structure.

You must completely remove Temporary Bridge foundations and re-compact the original ground to 95% relative compaction.

Dispose of Temporary Bridge materials and work debris.

Re-grade the area to its original contours.

48-6.04 PAYMENT

Not Used

^^

49 PILING

Add to section 49-1.01A:

Pile driving with impact hammers is limited to the low-flow period between June 15 and October 15

When driving piles within 26 horizontal feet of surface water limit the number of strikes to 1500 per day.

Add to section 49-1.03:

Expect difficult pile installation due to the conditions shown in the following table:

Pile location		Conditions
Bridge no.	Support location	
49C0459	Abutment 1 and 2	Low clearance due to overhead power lines
49C0459	Piles	Soft ground conditions and deep depths to bedrock

Clearance issues may result in piles being installed in multiple sections.

Add to section 49-2.01A(3)(b):

Before installing driven piles, submit a driving system submittal for each pile type for each of the support locations or control zones shown in the following table:

Bridge no.	Pile type	Support location or control zone
49C0459	Class 200 (Alternative W)	Abutment 1
49C0459	Class 200 (Alternative W)	Abutment 2

CALIFORNIA DEPARTMENT OF TRANSPORTATION
TRANSPORTATION LABORATORY

PILE AND DRIVING DATA FORM

Structure Name :_____ Contract No.:_____
_____ Project:_____
Structure No.:_____ Pile Driving Contractor or
Dist./Co./Rte./Post Mi:_____ Subcontractor_____(Pile Driven By)

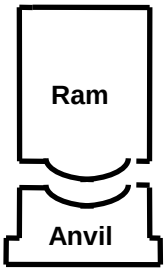

Hammer

Manufacturer:_____ Model:_____
Type:_____Serial No.:_____
Rated Energy:_____ at _____ Length of Stroke

Modifications: _____
_____
_____
_____
_____

Capblock (Hammer Cushion)

Material:_____
Thickness:_____in Area:_____in^2
Modulus of Elasticity - E:_____ksi
Coefficient of Restitution - e:_____

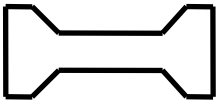

Pile Cap

Helmet
Bonnet
Anvil Block
Drivehead

Weight:_____ kips

Pile Cushion

Material:_____
Thickness:_____in Area: _____in^2
Modulus of Elasticity - E:_____ksi
Coefficient of Restitution - e:_____

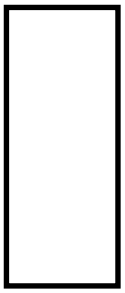

Pile

Pile Type:_____
Length (In Leads):_____ft
Lb/ft.:_____Taper:_____
Wall Thickness:_____in
Cross Sectional Area:_____ in^2
Design Pile Capacity:_____kips
Description of Splice:_____
_____
Tip Treatment Description:_____
_____

DISTRIBUTE:

- ☐ Translab, Foundation Testing
- ☐ Translab, Geotechnical Design
- ☐ Resident Engineer

Note: If mandrel is used to drive the pile, attach separate manufacturer's detail sheet(s) including weight and dimensions.

Submitted By:_____
Date:_____Phone No.:_____

^^

51 CONCRETE STRUCTURES

Add to section 51-1.03G(1):

The Colonial Dry Stack concrete surface texture at abutment face and wingwalls and barrier must match the texture, color, and pattern of architectural treatment at the Main Street Bridge over Santa Rosa Creek in Cambria, CA.

Submit the following:

1. Working drawings for the proposed architectural texture and location of 3” smooth border in elevation view.
2. Formliner technical data and manufacturer’s recommendations and specifications for handling and application.
3. A sample panel for formliner pattern.
4. Proposed delivery, application, and finishing.

Allow the Engineer two weeks for review.

Replace the first sentence of paragraph 2 section 51-4.01C(2) with:

Submit a girder erection work plan that accounts for the low overhead clearance due to overhead power lines at abutment 1 and 2.

Add the following after “Reinforcement” in the 2nd paragraph in Section 51-4.02A:

and welded wire

^^

52 REINFORCEMENT

Add to section 52-2.03A(1):

Epoxy coat reinforcement at the following locations:

1. Where shown

^^

56 SIGNS

Replace item #1 in the 7th paragraph in section 56-2.01B(2) with:

1. Phrase “Property of the County of San Luis Obispo”

^^

59 PAINTING

Replace "Reserved" in section 59-12.01C(1) of the RSS for section 59-12 with:

Completed stained surfaces must closely resemble the texture and color of color architectural treatment at the Main Street Bridge over Santa Rosa Creek in Downtown Cambria, CA.

Replace "Reserved" in section 59-12.02B of the RSS for section 59-12 with:

The stain must be one of the following products or equal:

Product	Manufacturer
Rock Stain	Arizona Rain Sprinkling Company Phoenix, AZ
Permeon	Soil-Tech Las Vegas, NV
Natina	Natina Products Coachella, CA

The spectrum of brown earth tone colors of the stain must be such that alteration of the color and further color development can be accomplished after the initial stain application.

^^

DIVISION VIII MISCELLANEOUS CONSTRUCTION

72 SLOPE PROTECTION

Add to section 72-1.01:

Temporary rock slope protection fabric must comply with section 5-1.36A of the General Conditions and the Contract for a permanent rock slope protection fabric class 8.

Replace “Reserved” in section 72-7 with:

72-7 GRAVEL FILTER

72-7.01 GENERAL

Section 72-7 includes specifications for gravel filters used with streambank rock slope protection systems and used as a buffer between native base soil and rock slope protection to reduce base soil migration and promote free passage of subsurface drainage.

Gravel filter includes placement on streambank subgrade as shown.

72-7.02 MATERIALS

The gravel filter will consist of hard, durable, clean and washed gravel, cobble, crushed stone, crushed rock, or any combination of these free from organic materials, clay balls, or other deleterious substances.

The aggregate used in the gravel filter must have a durability index not less than 40 and must contain at least 90 percent crushed particles when tested under California Test 205.

The percentage composition be weight of gravel filter in place must comply with the grading requirements shown in the following table:

Gravel Filter Grading Requirements

Sieve Size	Percent (%) Passing

6”	95-100
4”	65-95
3”	30-65
2”	20-35
1 ½”	10-25
1”	0-10

72-7.03 CONSTRUCTION

Deliver uniform mixture of gravel filter to the site. Spread uniform mixture in layers and shape to thickness and limits shown using suitable equipment.

Local surface irregularities of the gravel filter aggregate must not vary from the planned slope by more than 2 inches as measured at right angles to the slope.

72-7.04 PAYMENT

The quantity of gravel filter is based on the dimensions shown or ordered.

^^

80 FENCES

Replace "Reserved" in section 80-2.02A with:

Posts must be metal.

Add to section 80-2.02B:

Galvanize posts under section 75-1.05.

^^

81 MONUMENTS

Add to section 81-1.01:

Survey monuments must be the traffic type and must withstand a HS 20-44 loading. The survey monument must comply with the County’s Standard Construction Drawing M-1 (included as an appendix to these Contract Documents) and must be marked with the word “Monument”.

Replace the 1st paragraph in section 81-1.02 with:

The compressive strength of the concrete must be 4,000 psi at 28 days.

Replace the 2nd paragraph in section 81-1.02 with:

The County furnishes brass caps.

Add to section 81-1.03:

Set frames and covers for the survey monument wells after the paving operations are completed. The frames must be set to finish grade and a 7-inch wide by 6-inch thick collar must be placed around the frame and cover as shown.

^^

DIVISION IX TRAFFIC CONTROL FACILITIES

83 RAILINGS AND BARRIERS

Replace item 1 in the 7th paragraph of section 83-1.02B with:

1. wood posts

Replace item 2 in the 7th paragraph of section 83-1.02B with:

2. Wood blocks for line posts

Add to section 83-1.02B(2):

The offset from the face of the Type WB-31 transition railing to the hinge point must be at least 3'-6".

The offset from the face of the adjacent midwest guardrail system to the hinge point must be transitioned from the offset at the Type WB-31 transition railing to 4'-0" using a ratio of 6:1.

Replace section 83-1.02C(2) with:

83-1.02C(2) Alternative In-Line Terminal System

Alternative in-line terminal system must be furnished and installed as shown on the plans and under these special provisions.

The allowable alternatives for an in-line terminal system must consist of one of the following or a Department-authorized equal.

1. TYPE SKT TERMINAL SYSTEM - Type SKT terminal system must be a SKT 350 sequential kinking terminal manufactured by Road Systems, Inc., located in Big Spring, Texas, and must include items detailed for Type SKT terminal system shown on the plans. The SKT 350 sequential kinking terminal can be obtained from the distributor, Universal Industrial Sales, P.O. Box 699, Pleasant Grove, UT 84062, telephone (801) 785–0505 or from the distributor, Gregory Highway Products, 4100 13th Street, S.W., Canton, OH 44708, telephone (330) 477–4800.
2. TYPE ET TERMINAL SYSTEM - Type ET terminal system must be an ET-2000 PLUS (4-tube system) extruder terminal as manufactured by Trinity Highway Products, LLC, and must include items detailed for Type ET terminal system shown on the plans. The ET-2000 PLUS (4-tube system) extruder terminal can be obtained from the manufacturer, Trinity Highway Products, LLC, P.O. Box 99, Centerville, UT 84012, telephone (800) 772–7976.

Submit a certificate of compliance for terminal systems.

Terminal systems must be installed under the manufacturer's installation instructions and these specifications. Each terminal system installed must be identified by painting the type of terminal system in neat black letters and figures 2 inches high on the backside of the rail element between system posts numbers 4 and 5.

For Type ET terminal system, the steel foundation tubes with soil plates attached must be, at the Contractor's option, either driven, with or without pilot holes, or placed in drilled holes. Space around the

steel foundation tubes must be backfilled with selected earth, free of rock, placed in layers approximately 4 inches thick and each layer must be moistened and thoroughly compacted. The wood terminal posts must be inserted into the steel foundation tubes by hand and must not be driven. Before the wood terminal posts are inserted, the inside surfaces of the steel foundation tubes to receive the wood posts must be coated with a grease that will not melt or run at a temperature of 149 degrees F or less. The edges of the wood terminal posts may be slightly rounded to facilitate insertion of the post into the steel foundation tubes.

For Type SKT terminal system, the soil tubes must be, at the Contractor's option, driven with or without pilot holes, or placed in drilled holes. Space around the steel foundation tubes must be backfilled with selected earth, free of rock, placed in layers approximately 4 inches thick and each layer must be moistened and thoroughly compacted. Wood posts must be inserted into the steel foundation tubes by hand. Before the wood terminal posts are inserted, the inside surfaces of the steel foundation tubes to receive the wood posts must be coated with a grease that will not melt or run at a temperature of 149 degrees F or less. The edges of the wood posts may be slightly rounded to facilitate insertion of the post into the steel foundation tubes.

After installing the terminal system, dispose of surplus excavated material in a uniform manner along the adjacent roadway where designated by the Engineer.

Replace section 83-1.02C(3) with:

83-1.02C(3) Alternative Flared Terminal System

Alternative flared terminal system must be furnished and installed as shown on the plans and under these special provisions.

The allowable alternatives for a flared terminal system must consist of one of the following or a Department-authorized equal.

1. TYPE FLEAT TERMINAL SYSTEM - Type FLEAT terminal system must be a Flared Energy Absorbing Terminal 350 manufactured by Road Systems, Inc., located in Big Spring, Texas, and must include items detailed for Type FLEAT terminal system shown on the plans. The Flared Energy Absorbing Terminal 350 can be obtained from the distributor, Universal Industrial Sales, P.O. Box 699, Pleasant Grove, UT 84062, telephone (801) 785–0505 or from the distributor, Gregory Industries, Inc., 4100 13th Street, S.W., Canton, OH 44708, telephone (330) 477–4800.
2. TYPE SRT TERMINAL SYSTEM - Type SRT terminal system must be an SRT-350 Slotted Rail Terminal (8-post system) as manufactured by Trinity Highway Products, LLC, and must include items detailed for Type SRT terminal system shown on the plans. The SRT-350 Slotted Rail Terminal (8-post system) can be obtained from the manufacturer, Trinity Highway Products, LLC, P.O. Box 99, Centerville, UT 84012, telephone (800) 772–7976.

Submit a certificate of compliance for terminal systems.

Terminal systems must be installed under the manufacturer's installation instructions and these specifications. Each terminal system installed must be identified by painting the type of terminal system in neat black letters and figures 2 inches high on the backside of the rail element between system posts numbers 4 and 5.

For Type SRT terminal system, the steel foundation tubes with soil plates attached must be, at the Contractor's option, either driven, with or without pilot holes, or placed in drilled holes. Space around the steel foundation tubes must be backfilled with selected earth, free of rock, placed in layers approximately 4 inches thick and each layer must be moistened and thoroughly compacted. The wood terminal posts must be inserted into the steel foundation tubes by hand and must not be driven. Before the wood terminal posts are inserted, the inside surfaces of the steel foundation tubes to receive the wood posts must be coated with a grease that will not melt or run at a temperature of 149 degrees F or less. The edges of the wood terminal posts may be slightly rounded to facilitate insertion of the post into the steel foundation tubes.

For Type FLEAT terminal system, the soil tubes must be, at the Contractor's option, driven with or without pilot holes, or placed in drilled holes. Space around the steel foundation tubes must be backfilled with

selected earth, free of rock, placed in layers approximately 4 inches thick and each layer must be moistened and thoroughly compacted. Wood posts must be inserted into the steel foundation tubes by hand. Before the wood terminal posts are inserted, the inside surfaces of the steel foundation tubes to receive the wood posts must be coated with a grease that will not melt or run at a temperature of 149 degrees F or less. The edges of the wood posts may be slightly rounded to facilitate insertion of the post into the steel foundation tubes.

After installing the terminal system, dispose of surplus excavated material in a uniform manner along the adjacent roadway where designated by the Engineer.

Replace section 83-2.02E(6) with:

83-2.02E(6) Type TRACC Crash Cushion

Type TRACC crash cushion must be installed where shown.

Type TRACC crash cushion must be a TRACC (TL-2) as manufactured by Trinity Highway Products, LLC, and must include the items shown for the crash cushion.

The successful bidder can obtain the crash cushion from the manufacturer, Trinity Highway Products, LLC, P.O. Box 99, Centerville, UT 84012, telephone (800) 772–7976.

The price quoted by the manufacturer for the crash cushion, FOB plant in Centerville, Utah is $11,500 plus freight, not including sales tax.

The above price will be firm for orders placed on or before August 13, 2015, provided delivery is accepted within 90 days after the order is placed.

Submit a copy of the manufacturer's plan and parts list as an informational submittal.

Submit a certificate of compliance for Type TRACC crash cushion.

Install the crash cushion under the manufacturer's installation instructions.

After installing the Type TRACC crash cushion and backup, dispose of surplus excavated material in a uniform manner along the adjacent roadway where designated by the Engineer.

Add to section 83-2.03:

Concrete barrier (Type 732A) is paid for as concrete barrier (Type 732).

PAGE LEFT BLANK INTENTIONALLY

COUNTY OF SAN LUIS OBISPO

DEPARTMENT OF PUBLIC WORKS AND TRANSPORTATION

APPENDICES

FOR

TAR SPRING CREEK BRIDGE ON BRANCH MILL ROAD

CONTRACT NO. 300385

FEDERAL AID PROJECT NO. BRLO-5949(116)

PAGE LEFT BLANK INTENTIONALLY

APPENDIX A

FEDERAL WAGE DETERMINATION

PAGE LEFT BLANK INTENTIONALLY

General Decision Number: CA150019 02/06/2015 CA19

Superseded General Decision Number: CA20140019

State: California

Construction Types: Building, Heavy (Heavy and Dredging) and Highway

County: San Luis Obispo County in California.

BUILDING, DREDGING (does not include hopper dredge work), HEAVY (does not include water well drilling, AND HIGHWAY CONSTRUCTION PROJECTS

Note: Executive Order (EO) 13658 establishes an hourly minimum wage of $10.10 for 2015 that applies to all contracts subject to the Davis-Bacon Act for which the solicitation is issued on or after January 1, 2015. If this contract is covered by the EO, the contractor must pay all workers in any classification listed on this wage determination at least $10.10 (or the applicable wage rate listed on this wage determination, if it is higher) for all hours spent performing on the contract. The EO minimum wage rate will be adjusted annually. Additional information on contractor requirements and worker protections under the EO is available at www.dol.gov/whd/govcontracts.

Modification Number	Publication Date
0	01/02/2015
1	01/16/2015
2	02/06/2015

ASBE0005-002 06/30/2014

	Rates	Fringes
Asbestos Workers/Insulator (Includes the application of all insulating materials, protective coverings, coatings, and finishes to all types of mechanical systems)	$ 35.44	19.36
Fire Stop Technician (Application of Firestopping Materials for wall openings and penetrations in walls, floors, ceilings and curtain walls)	$ 24.34	16.09

ASBE0005-004 06/24/2013

	Rates	Fringes
Asbestos Removal worker/hazardous material handler (Includes preparation, wetting, stripping, removal,		

scrapping, vacuuming, bagging
and disposing of all
insulation materials from
mechanical systems, whether
they contain asbestos or not)....$ 16.95 10.23

BOIL0092-004 10/01/2012

Area within a 25 mile radius of City of Santa Maria

	Rates	Fringes
BOILERMAKER.....	$ 41.17	28.27

BOIL0549-007 01/01/2013

Remainder of County outside a 25 mile radius of City of Santa Maria

	Rates	Fringes
BOILERMAKER.....	$ 38.37	31.32

---

* BRCA0004-006 05/01/2014

	Rates	Fringes
BRICKLAYER; MARBLE SETTER.....	$ 36.13	13.12

*The wage scale for prevailing wage projects performed in Blythe, China lake, Death Valley, Fort Irwin, Twenty-Nine Palms, Needles and 1-15 corridor (Barstow to the Nevada State Line) will be Three Dollars ($3.00) above the standard San Bernardino/Riverside County hourly wage rate

---

BRCA0018-008 06/01/2014

	Rates	Fringes
MARBLE FINISHER.....	$ 28.45	11.38
TILE FINISHER.....	$ 23.78	9.84

BRCA0018-011 06/01/2014

	Rates	Fringes
TILE LAYER.....	$ 35.14	14.33

CARP0409-001 07/01/2010

	Rates	Fringes
CARPENTER		
(1) Carpenter, Cabinet Installer, Insulation Installer, Hardwood Floor Worker and acoustical installer.....	$ 37.35	11.08

(2) Millwright.....$ 37.85 11.08
(3) Piledrivermen/Derrick
Bargeman, Bridge or Dock
Carpenter, Heavy Framer,
Rock Bargeman or Scowman,
Rockslinger, Shingler
(Commercial).....$ 37.48 11.08
(4) Pneumatic Nailer,
Power Stapler.....$ 37.60 11.08
(5) Sawfiler.....$ 37.44 11.08
(6) Scaffold Builder.....$ 28.55 11.08
(7) Table Power Saw
Operator.....$ 37.45 11.08

FOOTNOTE: Work of forming in the construction of open cut sewers or storm drains, on operations in which horizontal lagging is used in conjunction with steel H-Beams driven or placed in pre- drilled holes, for that portion of a lagged trench against which concrete is poured, namely, as a substitute for back forms (which work is performed by piledrivers): $0.13 per hour additional.

CARP0409-005 07/01/2010

	Rates	Fringes
Drywall		
DRYWALL INSTALLER/LATHER....	$ 37.35	11.08
STOCKER/SCRAPPER.....	$ 10.00	6.67

CARP0409-008 08/01/2010

	Rates	Fringes
Modular Furniture Installer.....	$ 17.00	7.41

ELEC0639-001 01/01/2015

	Rates	Fringes
Electricians		
Wireman/Technician.....	$ 39.30	18.66

FOOTNOTES:

CABLE SPLICER: 10% additional per hour above Wireman/Technician basic hourly rate.

Work from trusses, swinging scaffolds, open ladders, scaffolds, bosun chairs, stacks or towers, where subject to a direct fall from the ground floor or support structure from a distance of fifty (50) feet to ninety (90) feet: to be paid time and one-half. Work from trusses, swinging scaffolds, open ladders, scaffolds, bosun chairs, stacks or towers, where subject to a direct fall from the ground floor or support structure from a distance over ninety (90) feet: to be paid double the regular straight time rate of pay. Where workers are required to work under compressed air or in areas where injurious gases, dust or fumes are

present in amounts necessitating the use of gas masks or self-contained breathing apparatus (particle masks are not considered self-contained breathing apparatus) or where workers work on poles at a distance of seventy-five (75) feet or more from the ground: to be paid a bonus of straight time pay. This shall be at a minimum of one hour, and thereafter, each succeeding hour or fraction thereof shall constitute an hour at the bonus rate. Tunnel work: to be paid at the time and one-quarter hourly rate.

All employers may request workmen to report direct to a job within a free zone to include everything west of ten (10) miles east of Highway 101, as the crow flies, and then (10) miles north and south of Highway 46, as the crow flies, to the junction of Highway 41 and Highway 46. Everything outside this area shall be paid at full subsistence provide said job is of five (5) days duration or more and provide there is storage on the job for the Employee's tools. The Employer will be responsible for loss of tools under such circumstances. (Road: The most direct route on a surfaced road).

On all jobs or projects outside the free zone, as stated above, Employees may be required to report to the job site in their own transportation at the regular starting time and remain on the job site until the regular quitting time and these shall be paid at fifty dollars ($50.00) per day or fifty-one cents ($0.51) per mile for each road mile from shop to job and job to shop (round trip). (Day worked shall mean at least four (4) hours on the job unless sent home on account of weather, emergency, sickness, or injury).

The Employer shall pay for traveling time and furnish transportation from shop to job, job to job, and job to shop. Travel time shall be at the appropriate rate of pay for that day of the week. (Monday through Friday, straight time, Saturday and Sunday, double time.)

ELEC0639-003 05/26/2014

COMMUNICATIONS AND SYSTEMS WORK

SAN LUIS OBISPO COUNTY

	Rates	Fringes
Communications System		
Installer	$ 29.09	11.60
Technician	$ 30.89	11.66

SCOPE OF WORK: Installation, testing, service and maintenance of systems utilizing the transmission and/or transference of voice, sound, vision and digital for commercial, educational, security and entertainment purposes for the following: TV monitoring and surveillance, background - foreground music, intercom and telephone interconnect, microwave transmission, multi-media, multiplex, nurse call systems, radio page, burglar alarms and fire alarm (see last paragraph below).

Communication Systems that transmit or receive information and/or control systems that are intrinsic to the above listed systems; inclusion or exclusion of terminations and testings of conductors determined by their function; excluding all other data systems or multiple systems which include control function or power supply; excluding installation of raceway systems, conduit systems, line voltage work, and energy management systems.

Fire alarm work shall be performed at the current inside electrician total cost package.

ELEC1245-001 06/01/2013

	Rates	Fringes
LINE CONSTRUCTION		
(1) Lineman; Cable splicer..	$ 50.30	15.00
(2) Equipment specialist (operates crawler tractors, commercial motor vehicles, backhoes, trenchers, cranes (50 tons and below), overhead & underground distribution line equipment).....	$ 40.17	14.56
(3) Groundman.....	$ 30.73	13.48
(4) Powderman.....	$ 44.91	13.48

HOLIDAYS: New Year's Day, M.L. King Day, Memorial Day, Independence Day, Labor Day, Veterans Day, Thanksgiving Day and day after Thanksgiving, Christmas Day

---

ELEV0008-003 01/01/2014

	Rates	Fringes
ELEVATOR MECHANIC.....	$ 59.19	26.785

FOOTNOTE:
PAID VACATION: Employer contributes 8% of regular hourly rate as vacation pay credit for employees with more than 5 years of service, and 6% for 6 months to 5 years of service.
PAID HOLIDAYS: New Years Day, Memorial Day, Independence Day, Labor Day, Veterans Day, Thanksgiving Day, Friday after Thanksgiving, and Christmas Day.

ENGI0012-003 07/07/2014

	Rates	Fringes
OPERATOR: Power Equipment (All Other Work)		
GROUP 1.....	$ 39.05	22.25
GROUP 2.....	$ 39.83	22.25
GROUP 3.....	$ 40.12	22.25

GROUP 4	$ 41.61	22.25
GROUP 5	$ 41.86	22.25
GROUP 6	$ 41.83	22.25
GROUP 8	$ 41.94	22.25
GROUP 9	$ 42.19	22.25
GROUP 10	$ 42.06	22.25
GROUP 11	$ 42.31	22.25
GROUP 12	$ 42.23	22.25
GROUP 13	$ 42.33	22.25
GROUP 14	$ 42.36	22.25
GROUP 15	$ 42.44	22.25
GROUP 16	$ 42.56	22.25
GROUP 17	$ 42.73	22.25
GROUP 18	$ 42.83	22.25
GROUP 19	$ 42.94	22.25
GROUP 20	$ 43.06	22.25
GROUP 21	$ 43.23	22.25
GROUP 22	$ 43.33	22.25
GROUP 23	$ 43.44	22.25
GROUP 24	$ 43.56	22.25
GROUP 25	$ 43.73	22.25

OPERATOR: Power Equipment
(Cranes, Piledriving &
Hoisting)

GROUP 1	$ 40.40	22.25
GROUP 2	$ 41.18	22.25
GROUP 3	$ 41.47	22.25
GROUP 4	$ 41.61	22.25
GROUP 5	$ 41.83	22.25
GROUP 6	$ 41.94	22.25
GROUP 7	$ 42.06	22.25
GROUP 8	$ 42.23	22.25
GROUP 9	$ 42.40	22.25
GROUP 10	$ 43.40	22.25
GROUP 11	$ 44.40	22.25
GROUP 12	$ 45.40	22.25
GROUP 13	$ 46.40	22.25

OPERATOR: Power Equipment
(Tunnel Work)

GROUP 1	$ 40.90	22.25
GROUP 2	$ 41.68	22.25
GROUP 3	$ 41.97	22.25
GROUP 4	$ 42.11	22.25
GROUP 5	$ 42.33	22.25
GROUP 6	$ 42.44	22.25
GROUP 7	$ 42.56	22.25

PREMIUM PAY:

$3.75 per hour shall be paid on all Power Equipment Operator work on the followng Military Bases: China Lake Naval Reserve, Vandenberg AFB, Point Arguello, Seely Naval Base, Fort Irwin, Nebo Annex Marine Base, Marine Corp Logistics Base Yermo, Edwards AFB, 29 Palms Marine Base and Camp Pendleton

Workers required to suit up and work in a hazardous material environment: $2.00 per hour additional. Combination mixer and compressor operator on gunite work shall be classified as a concrete mobile mixer operator.

SEE ZONE DEFINITIONS AFTER CLASSIFICATIONS

POWER EQUIPMENT OPERATORS CLASSIFICATIONS

GROUP 1: Bargeman; Brakeman; Compressor operator; Ditch Witch, with seat or similar type equipment; Elevator operator-inside; Engineer Oiler; Forklift operator (includes loed, lull or similar types under 5 tons; Generator operator; Generator, pump or compressor plant operator; Pump operator; Signalman; Switchman

GROUP 2: Asphalt-rubber plant operator (nurse tank operator); Concrete mixer operator-skip type; Conveyor operator; Fireman; Forklift operator (includes loed, lull or similar types over 5 tons; Hydrostatic pump operator; oiler crusher (asphalt or concrete plant); Petromat laydown machine; PJU side dum jack; Screening and conveyor machine operator (or similar types); Skiploader (wheel type up to 3/4 yd. without attachment); Tar pot fireman; Temporary heating plant operator; Trenching machine oiler

GROUP 3: Asphalt-rubber blend operator; Bobcat or similar type (Skid steer); Equipment greaser (rack); Ford Ferguson (with dragtype attachments); Helicopter radioman (ground); Stationary pipe wrapping and cleaning machine operator

GROUP 4: Asphalt plant fireman; Backhoe operator (mini-max or similar type); Boring machine operator; Boxman or mixerman (asphalt or concrete); Chip spreading machine operator; Concrete cleaning decontamination machine operator; Concrete Pump Operator (small portable); Drilling machine operator, small auger types (Texoma super economatic or similar types - Hughes 100 or 200 or similar types - drilling depth of 30' maximum); Equipment greaser (grease truck); Guard rail post driver operator; Highline cableway signalman; Hydra-hammer-aero stomper; Micro Tunneling (above ground tunnel); Power concrete curing machine operator; Power concrete saw operator; Power-driven jumbo form setter operator; Power sweeper operator; Rock Wheel Saw/Trencher; Roller operator (compacting); Screed operator (asphalt or concrete); Trenching machine operator (up to 6 ft.); Vacuum or much truck

GROUP 5: Equipment Greaser (Grease Truck/Multi Shift).

GROUP 6: Articulating material hauler; Asphalt plant engineer; Batch plant operator; Bit sharpener; Concrete joint machine operator (canal and similar type); Concrete planer operator; Dandy digger; Deck engine operator; Derrickman (oilfield type); Drilling machine operator, bucket or auger types (Calweld 100 bucket or similar types - Watson 1000 auger or similar types - Texoma 330, 500 or 600 auger or similar types - drilling depth of 45' maximum); Drilling machine operator; Hydrographic seeder machine operator (straw, pulp or seed), Jackson track maintainer, or similar type; Kalamazoo Switch tamper, or similar type; Machine tool operator; Maginnis internal full slab vibrator, Mechanical berm, curb or gutter(concrete or asphalt); Mechanical finisher operator (concrete, Clary-Johnson-Bidwell or similar); Micro tunnel system

(below ground); Pavement breaker operator (truck mounted); Road oil mixing machine operator; Roller operator (asphalt or finish), rubber-tired earth moving equipment (single engine, up to and including 25 yds. struck); Self-propelled tar pipelining machine operator; Skiploader operator (crawler and wheel type, over 3/4 yd. and up to and including 1-1/2 yds.); Slip form pump operator (power driven hydraulic lifting device for concrete forms); Tractor operator-bulldozer, tamper-scraper (single engine, up to 100 h.p. flywheel and similar types, up to and including D-5 and similar types); Tugger hoist operator (1 drum); Ultra high pressure waterjet cutting tool system operator; Vacuum blasting machine operator

GROUP 8: Asphalt or concrete spreading operator (tamping or finishing); Asphalt paving machine operator (Barber Greene or similar type); Asphalt-rubber distribution operator; Backhoe operator (up to and including 3/4 yd.), small ford, Case or similar; Cast-in-place pipe laying machine operator; Combination mixer and compressor operator (gunite work); Compactor operator (self-propelled); Concrete mixer operator (paving); Crushing plant operator; Drill Doctor; Drilling machine operator, Bucket or auger types (Calweld 150 bucket or similar types - Watson 1500, 2000 2500 auger or similar types - Texoma 700, 800 auger or similar types - drilling depth of 60' maximum); Elevating grader operator; Grade checker; Gradall operator; Grouting machine operator; Heavy-duty repairman; Heavy equipment robotics operator; Kalamazoo balliste regulator or similar type; Kolman belt loader and similar type; Le Tourneau blob compactor or similar type; Loader operator (Athey, Euclid, Sierra and similar types); Mobark Chipper or similar; Ozzie padder or similar types; P.C. slot saw; Pneumatic concrete placing machine operator (Hackley-Presswell or similar type); Pumpcrete gun operator; Rock Drill or similar types; Rotary drill operator (excluding caisson type); Rubber-tired earth-moving equipment operator (single engine, caterpillar, Euclid, Athey Wagon and similar types with any and all attachments over 25 yds. up to and including 50 cu. yds. struck); Rubber-tired earth-moving equipment operator (multiple engine up to and including 25 yds. struck); Rubber-tired scraper operator (self-loading paddle wheel type-John Deere, 1040 and similar single unit); Self-propelled curb and gutter machine operator; Shuttle buggy; Skiploader operator (crawler and wheel type over 1-1/2 yds. up to and including 6-1/2 yds.); Soil remediation plant operator; Surface heaters and planer operator; Tractor compressor drill combination operator; Tractor operator (any type larger than D-5 - 100 flywheel h.p. and over, or similar-bulldozer, tamper, scraper and push tractor single engine); Tractor operator (boom attachments), Traveling pipe wrapping, cleaning and bendng machine operator; Trenching machine operator (over 6 ft. depth capacity, manufacturer's rating); trenching Machine with Road Miner attachment (over 6 ft depth capacity): Ultra high pressure waterjet cutting tool system mechanic; Water pull (compaction) operator

GROUP 9: Heavy Duty Repairman

GROUP 10: Drilling machine operator, Bucket or auger types (Calweld 200 B bucket or similar types-Watson 3000 or 5000 auger or similar types-Texoma 900 auger or similar types-drilling depth of 105' maximum); Dual drum mixer, dynamic compactor LDC350 (or similar types); Monorail locomotive operator (diesel, gas or electric); Motor patrol-blade operator (single engine); Multiple engine tractor operator (Euclid and similar type-except Quad 9 cat.); Rubber-tired earth-moving equipment operator (single engine, over 50 yds. struck); Pneumatic pipe ramming tool and similar types; Prestressed wrapping machine operator; Rubber-tired earth-moving equipment operator (single engine, over 50 yds. struck); Rubber tired earth moving equipment operator (multiple engine, Euclid, caterpillar and similar over 25 yds. and up to 50 yds. struck), Tower crane repairman; Tractor loader operator (crawler and wheel type over 6-1/2 yds.); Woods mixer operator (and similar Pugmill equipment)

GROUP 11: Heavy Duty Repairman - Welder Combination, Welder - Certified.

GROUP 12: Auto grader operator; Automatic slip form operator; Drilling machine operator, bucket or auger types (Calweld, auger 200 CA or similar types - Watson, auger 6000 or similar types - Hughes Super Duty, auger 200 or similar types - drilling depth of 175' maximum); Hoe ram or similar with compressor; Mass excavator operator less tha 750 cu. yards; Mechanical finishing machine operator; Mobile form traveler operator; Motor patrol operator (multi-engine); Pipe mobile machine operator; Rubber-tired earth- moving equipment operator (multiple engine, Euclid, Caterpillar and similar type, over 50 cu. yds. struck); Rubber-tired self- loading scraper operator (paddle-wheel-auger type self-loading - two (2) or more units)

GROUP 13: Rubber-tired earth-moving equipment operator operating equipment with push-pull system (single engine, up to and including 25 yds. struck)

GROUP 14: Canal liner operator; Canal trimmer operator; Remote- control earth-moving equipment operator (operating a second piece of equipment: $1.00 per hour additional); Wheel excavator operator (over 750 cu. yds.)

GROUP 15: Rubber-tired earth-moving equipment operator, operating equipment with push-pull system (single engine, Caterpillar, Euclid, Athey Wagon and similar types with any and all attachments over 25 yds. and up to and including 50 yds. struck); Rubber-tired earth-moving equipment operator, operating equipment with push-pull system (multiple engine-up to and including 25 yds. struck)

GROUP 16: Rubber-tired earth-moving equipment operator, operating equipment with push-pull system (single engine, over 50 yds. struck); Rubber-tired earth-moving equipment operator, operating equipment with push-pull system (multiple engine, Euclid, Caterpillar and similar, over 25 yds. and up to 50 yds. struck)

GROUP 17: Rubber-tired earth-moving equipment operator, operating equipment with push-pull system (multiple engine, Euclid, Caterpillar and similar, over 50 cu. yds. struck); Tandem tractor operator (operating crawler type tractors in tandem - Quad 9 and similar type)

GROUP 18: Rubber-tired earth-moving equipment operator, operating in tandem (scrapers, belly dumps and similar types in any combination, excluding compaction units - single engine, up to and including 25 yds. struck)

GROUP 19: Rotex concrete belt operator (or similar types); Rubber-tired earth-moving equipment operator, operating in tandem (scrapers, belly dumps and similar types in any combination, excluding compaction units - single engine, Caterpillar, Euclid, Athey Wagon and similar types with any and all attachments over 25 yds.and up to and including 50 cu. yds. struck); Rubber-tired earth-moving equipment operator, operating in tandem (scrapers, belly dumps and similar types in any combination, excluding compaction units - multiple engine, up to and including 25 yds. struck)

GROUP 20: Rubber-tired earth-moving equipment operator, operating in tandem (scrapers, belly dumps and similar types in any combination, excluding compaction units - single engine, over 50 yds. struck); Rubber-tired earth-moving equipment operator, operating in tandem (scrapers, belly dumps, and similar types in any combination, excluding compaction units - multiple engine, Euclid, Caterpillar and similar, over 25 yds. and up to 50 yds. struck)

GROUP 21: Rubber-tired earth-moving equipment operator, operating in tandem (scrapers, belly dumps and similar types in any combination, excluding compaction units - multiple engine, Euclid, Caterpillar and similar type, over 50 cu. yds. struck)

GROUP 22: Rubber-tired earth-moving equipment operator, operating equipment with the tandem push-pull system (single engine, up to and including 25 yds. struck)

GROUP 23: Rubber-tired earth-moving equipment operator, operating equipment with the tandem push-pull system (single engine, Caterpillar, Euclid, Athey Wagon and similar types with any and all attachments over 25 yds. and up to and including 50 yds. struck); Rubber-tired earth-moving equipment operator, operating with the tandem push-pull system (multiple engine, up to and including 25 yds. struck)

GROUP 24: Rubber-tired earth-moving equipment operator, operating equipment with the tandem push-pull system (single engine, over 50 yds. struck); Rubber-tired earth-moving equipment operator, operating equipment with the tandem push-pull system (multiple engine, Euclid, Caterpillar and similar, over 25 yds. and up to 50 yds. struck)

GROUP 25: Concrete pump operator-truck mounted; Rubber-tired

earth-moving equipment operator, operating equipment with the tandem push-pull system (multiple engine, Euclid, Caterpillar and similar type, over 50 cu. yds. struck)

CRANES, PILEDRIVING AND HOISTING EQUIPMENT CLASSIFICATIONS

GROUP 1: Engineer oiler; Fork lift operator (includes loed, lull or similar types)

GROUP 2: Truck crane oiler

GROUP 3: A-frame or winch truck operator; Ross carrier operator (jobsite)

GROUP 4: Bridge-type unloader and turntable operator; Helicopter hoist operator

GROUP 5: Hydraulic boom truck; Stinger crane (Austin-Western or similar type); Tugger hoist operator (1 drum)

GROUP 6: Bridge crane operator; Cretor crane operator; Hoist operator (Chicago boom and similar type); Lift mobile operator; Lift slab machine operator (Vagtborg and similar types); Material hoist and/or manlift operator; Polar gantry crane operator; Self Climbing scaffold (or similar type); Shovel, backhoe, dragline, clamshell operator (over 3/4 yd. and up to 5 cu. yds. mrc); Tugger hoist operator

GROUP 7: Pedestal crane operator; Shovel, backhoe, dragline, clamshell operator (over 5 cu. yds. mrc); Tower crane repair; Tugger hoist operator (3 drum)

GROUP 8: Crane operator (up to and including 25 ton capacity); Crawler transporter operator; Derrick barge operator (up to and including 25 ton capacity); Hoist operator, stiff legs, Guy derrick or similar type (up to and including 25 ton capacity); Shovel, backhoe, dragline, clamshell operator (over 7 cu. yds., M.R.C.)

GROUP 9: Crane operator (over 25 tons and up to and including 50 tons mrc); Derrick barge operator (over 25 tons up to and including 50 tons mrc); Highline cableway operator; Hoist operator, stiff legs, Guy derrick or similar type (over 25 tons up to and including 50 tons mrc); K-crane operator; Polar crane operator; Self erecting tower crane operator maximum lifting capacity ten tons

GROUP 10: Crane operator (over 50 tons and up to and including 100 tons mrc); Derrick barge operator (over 50 tons up to and including 100 tons mrc); Hoist operator, stiff legs, Guy derrick or similar type (over 50 tons up to and including 100 tons mrc), Mobile tower crane operator (over 50 tons, up to and including 100 tons M.R.C.); Tower crane operator and tower gantry

GROUP 11: Crane operator (over 100 tons and up to and including 200 tons mrc); Derrick barge operator (over 100 tons up to and including 200 tons mrc); Hoist operator, stiff legs, Guy derrick or similar type (over 100 tons up to and including 200 tons mrc); Mobile tower crane operator

(over 100 tons up to and including 200 tons mrc)

GROUP 12: Crane operator (over 200 tons up to and including 300 tons mrc); Derrick barge operator (over 200 tons up to and including 300 tons mrc); Hoist operator, stiff legs, Guy derrick or similar type (over 200 tons, up to and including 300 tons mrc); Mobile tower crane operator (over 200 tons, up to and including 300 tons mrc)

GROUP 13: Crane operator (over 300 tons); Derrick barge operator (over 300 tons); Helicopter pilot; Hoist operator, stiff legs, Guy derrick or similar type (over 300 tons); Mobile tower crane operator (over 300 tons)

TUNNEL CLASSIFICATIONS

GROUP 1: Skiploader (wheel type up to 3/4 yd. without attachment)

GROUP 2: Power-driven jumbo form setter operator

GROUP 3: Dinkey locomotive or motorperson (up to and including 10 tons)

GROUP 4: Bit sharpener; Equipment greaser (grease truck); Slip form pump operator (power-driven hydraulic lifting device for concrete forms); Tugger hoist operator (1 drum); Tunnel locomotive operator (over 10 and up to and including 30 tons)

GROUP 5: Backhoe operator (up to and including 3/4 yd.); Small Ford, Case or similar; Drill doctor; Grouting machine operator; Heading shield operator; Heavy-duty repairperson; Loader operator (Athey, Euclid, Sierra and similar types); Mucking machine operator (1/4 yd., rubber-tired, rail or track type); Pneumatic concrete placing machine operator (Hackley-Presswell or similar type); Pneumatic heading shield (tunnel); Pumpcrete gun operator; Tractor compressor drill combination operator; Tugger hoist operator (2 drum); Tunnel locomotive operator (over 30 tons)

GROUP 6: Heavy Duty Repairman

GROUP 7: Tunnel mole boring machine operator

ENGINEERS ZONES

$1.00 additional per hour for all of IMPERIAL County and the portions of KERN, RIVERSIDE & SAN BERNARDINO Counties as defined below:

That area within the following Boundary: Begin in San Bernardino County, approximately 3 miles NE of the intersection of I-15 and the California State line at that point which is the NW corner of Section 1, T17N,m R14E, San Bernardino Meridian. Continue W in a straight line to that point which is the SW corner of the northwest quarter of Section 6, T27S, R42E, Mt. Diablo Meridian. Continue North to the intersection with the Inyo County Boundary at that point which is the NE corner of the western half of the northern quarter of Section

6, T25S, R42E, MDM. Continue W along the Inyo and San Bernardino County boundary until the intersection with Kern County, as that point which is the SE corner of Section 34, T24S, R40E, MDM. Continue W along the Inyo and Kern County boundary until the intersection with Tulare County, at that point which is the SW corner of the SE quarter of Section 32, T24S, R37E, MDM. Continue W along the Kern and Tulare County boundary, until that point which is the NW corner of T25S, R32E, MDM. Continue S following R32E lines to the NW corner of T31S, R32E, MDM. Continue W to the NW corner of T31S, R31E, MDM. Continue S to the SW corner of T32S, R31E, MDM. Continue W to SW corner of SE quarter of Section 34, T32S, R30E, MDM. Continue S to SW corner of T11N, R17W, SBM. Continue E along south boundary of T11N, SBM to SW corner of T11N, R7W, SBM. Continue S to SW corner of T9N, R7W, SBM. Continue E along south boundary of T9N, SBM to SW corner of T9N, R1E, SBM. Continue S along west boundary of R1E, SMB to Riverside County line at the SW corner of T1S, R1E, SBM. Continue E along south boundary of T1s, SBM (Riverside County Line) to SW corner of T1S, R10E, SBM. Continue S along west boundary of R10E, SBM to Imperial County line at the SW corner of T8S, R10E, SBM. Continue W along Imperial and Riverside county line to NW corner of T9S, R9E, SBM. Continue S along the boundary between Imperial and San Diego Counties, along the west edge of R9E, SBM to the south boundary of Imperial County/California state line. Follow the California state line west to Arizona state line, then north to Nevada state line, then continuing NW back to start at the point which is the NW corner of Section 1, T17N, R14E, SBM

$1.00 additional per hour for portions of SAN LUIS OBISPO, KERN, SANTA BARBARA & VENTURA as defined below:

That area within the following Boundary: Begin approximately 5 miles north of the community of Cholame, on the Monterey County and San Luis Obispo County boundary at the NW corner of T25S, R16E, Mt. Diablo Meridian. Continue south along the west side of R16E to the SW corner of T30S, R16E, MDM. Continue E to SW corner of T30S, R17E, MDM. Continue S to SW corner of T31S, R17E, MDM. Continue E to SW corner of T31S, R18E, MDM. Continue S along West side of R18E, MDM as it crosses into San Bernardino Meridian numbering area and becomes R30W. Follow the west side of R30W, SBM to the SW corner of T9N, R30W, SBM. Continue E along the south edge of T9N, SBM to the Santa Barbara County and Ventura County boundary at that point whch is the SW corner of Section 34.T9N, R24W, SBM, continue S along the Ventura County line to that point which is the SW corner of the SE quarter of Section 32, T7N, R24W, SBM. Continue E along the south edge of T7N, SBM to the SE corner to T7N, R21W, SBM. Continue N along East side of R21W, SBM to Ventura County and Kern County boundary at the NE corner of T8N, R21W. Continue W along the Ventura County and Kern County boundary to the SE corner of T9N, R21W. Continue North along the East edge of R21W, SBM to the NE corner of T12N, R21W, SBM. Continue West along the north edge of T12N, SBM to the SE corner of T32S, R21E, MDM. [T12N SBM is a think strip between T11N SBM and T32S MDM]. Continue North along the East side of R21E, MDM to the Kings County and Kern County border at the NE corner of T25S, R21E, MDM, continue West along the Kings County and Kern County Boundary until the intersection of San Luis Obispo

County. Continue west along the Kings County and San Luis Obispo County boundary until the intersection with Monterey County. Continue West along the Monterey County and San Luis Obispo County boundary to the beginning point at the NW corner of T25S, R16E, MDM.

$2.00 additional per hour for INYO and MONO Counties and the Northern portion of SAN BERNARDINO County as defined below:

That area within the following Boundary: Begin at the intersection of the northern boundary of Mono County and the California state line at the point which is the center of Section 17, T10N, R22E, Mt. Diablo Meridian. Continue S then SE along the entire western boundary of Mono County, until it reaches Inyo County at the point which is the NE corner of the Western half of the NW quarter of Section 2, T8S, R29E, MDM. Continue SSE along the entire western boundary of Inyo County, until the intersection with Kern County at the point which is the SW corner of the SE 1/4 of Section 32, T24S, R37E, MDM. Continue E along the Inyo and Kern County boundary until the intersection with San Bernardino County at that point which is the SE corner of section 34, T24S, R40E, MDM. Continue E along the Inyo and San Bernardino County boundary until the point which is the NE corner of the Western half of the NW quarter of Section 6, T25S, R42E, MDM. Continue S to that point which is the SW corner of the NW quarter of Section 6, T27S, R42E, MDM. Continue E in a straight line to the California and Nevada state border at the point which is the NW corner of Section 1, T17N, R14E, San Bernardino Meridian. Then continue NW along the state line to the starting point, which is the center of Section 18, T10N, R22E, MDM.

REMAINING AREA NOT DEFINED ABOVE RECIEVES BASE RATE

ENGI0012-004 08/01/2014

	Rates	Fringes
OPERATOR: Power Equipment (DREDGING)		
(1) Leverman	$ 48.60	22.40
(2) Dredge dozer	$ 42.63	22.40
(3) Deckmate	$ 42.52	22.40
(4) Winch operator (stern winch on dredge)	$ 41.97	22.40
(5) Fireman-Oiler, Deckhand, Bargeman, Leveehand	$ 41.43	22.40
(6) Barge Mate	$ 42.04	22.40

IRON0377-002 01/01/2015

	Rates	Fringes
Ironworkers:		
Fence Erector	$ 27.08	18.24
Ornamental, Reinforcing		

and Structural.....$ 33.50 28.20

PREMIUM PAY:

$6.00 additional per hour at the following locations:

China Lake Naval Test Station, Chocolate Mountains Naval Reserve-Niland,
Edwards AFB, Fort Irwin Military Station, Fort Irwin Training Center-Goldstone, San Clemente Island, San Nicholas Island, Susanville Federal Prison, 29 Palms - Marine Corps, U.S. Marine Base - Barstow, U.S. Naval Air Facility - Sealey, Vandenberg AFB

$4.00 additional per hour at the following locations:

Army Defense Language Institute - Monterey, Fallon Air Base, Naval Post Graduate School - Monterey, Yermo Marine Corps Logistics Center

$2.00 additional per hour at the following locations:

Port Hueneme, Port Mugu, U.S. Coast Guard Station - Two Rock

LABO0220-001 07/01/2014

	Rates	Fringes
LABORER (TUNNEL)		
GROUP 1	$ 35.74	16.48
GROUP 2	$ 36.06	16.48
GROUP 3	$ 36.52	16.48
GROUP 4	$ 37.21	16.48
LABORER		
GROUP 1	$ 30.19	16.48
GROUP 2	$ 30.74	16.48
GROUP 3	$ 31.29	16.48
GROUP 4	$ 32.84	16.48
GROUP 5	$ 33.19	16.48

LABORER CLASSIFICATIONS

GROUP 1: Cleaning and handling of panel forms; Concrete screeding for rough strike-off; Concrete, water curing; Demolition laborer, the cleaning of brick if performed by a worker performing any other phase of demolition work, and the cleaning of lumber; Fire watcher, limber, brush loader, piler and debris handler; Flag person; Gas, oil and/or water pipeline laborer; Laborer, asphalt-rubber material loader; Laborer, general or construction; Laborer, general clean-up; Laborer, landscaping; Laborer, jetting; Laborer, temporary water and air lines; Material hose operator (walls, slabs, floors and decks); Plugging, filling of shee bolt holes; Dry packing of concrete; Railroad maintenance, repair track person and road beds; Streetcar and railroad construction track laborers; Rigging and signaling; Scaler; Slip form raiser; Tar and mortar; Tool crib or tool house laborer; Traffic control by any method; Window cleaner; Wire mesh pulling - all concrete pouring operations

GROUP 2: Asphalt shoveler; Cement dumper (on 1 yd. or larger mixer and handling bulk cement); Cesspool digger and installer; Chucktender; Chute handler, pouring concrete, the handling of the chute from readymix trucks, such as walls, slabs, decks, floors, foundation, footings, curbs, gutters and sidewalks; Concrete curer, impervious membrane and form oiler; Cutting torch operator (demolition); Fine grader, highways and street paving, airport, runways and similar type heavy construction; Gas, oil and/or water pipeline wrapper - pot tender and form person; Guinea chaser; Headerboard person - asphalt; Laborer, packing rod steel and pans; Membrane vapor barrier installer; Power broom sweeper (small); Riprap stonepaver, placing stone or wet sacked concrete; Roto scraper and tiller; Sandblaster (pot tender); Septic tank digger and installer(lead); Tank scaler and cleaner; Tree climber, faller, chain saw operator, Pittsburgh chipper and similar type brush shredder; Underground laborer, including caisson bellower

GROUP 3: Buggymobile person; Concrete cutting torch; Concrete pile cutter; Driller, jackhammer, 2-1/2 ft. drill steel or longer; Dri-pak-it machine; Gas, oil and/or water pipeline wrapper, 6-in. pipe and over, by any method, inside and out; High scaler (including drilling of same); Hydro seeder and similar type; Impact wrench multi-plate; Kettle person, pot person and workers applying asphalt, lay-kold, creosote, lime caustic and similar type materials ("applying" means applying, dipping, brushing or handling of such materials for pipe wrapping and waterproofing); Operator of pneumatic, gas, electric tools, vibrating machine, pavement breaker, air blasting, come-alongs, and similar mechanical tools not separately classified herein; Pipelayer's backup person, coating, grouting, making of joints, sealing, caulking, diapering and including rubber gasket joints, pointing and any and all other services; Rock slinger; Rotary scarifier or multiple head concrete chipping scarifier; Steel headerboard and guideline setter; Tamper, Barko, Wacker and similar type; Trenching machine, hand-propelled

GROUP 4: Asphalt raker, lute person, ironer, asphalt dump person, and asphalt spreader boxes (all types); Concrete core cutter (walls, floors or ceilings), grinder or sander; Concrete saw person, cutting walls or flat work, scoring old or new concrete; Cribber, shorer, lagging, sheeting and trench bracing, hand-guided lagging hammer; Head rock slinger; Laborer, asphalt- rubber distributor boot person; Laser beam in connection with laborers' work; Oversize concrete vibrator operator, 70 lbs. and over; Pipelayer performing all services in the laying and installation of pipe from the point of receiving pipe in the ditch until completion of operation, including any and all forms of tubular material, whether pipe, metallic or non-metallic, conduit and any other stationary type of tubular device used for the conveying of any substance or element, whether water, sewage, solid gas, air, or other product whatsoever and without regard to the nature of material from which the tubular material is fabricated; No-joint pipe and stripping of same; Prefabricated manhole installer; Sandblaster

(nozzle person), water blasting, Porta Shot-Blast

GROUP 5: Blaster powder, all work of loading holes, placing and blasting of all powder and explosives of whatever type, regardless of method used for such loading and placing; Driller: All power drills, excluding jackhammer, whether core, diamond, wagon, track, multiple unit, and any and all other types of mechanical drills without regard to the form of motive power; Toxic waste removal

TUNNEL LABORER CLASSIFICATIONS

GROUP 1: Batch plant laborer; Changehouse person; Dump person; Dump person (outside); Swamper (brake person and switch person on tunnel work); Tunnel materials handling person; Nipper; Pot tender, using mastic or other materials (for example, but not by way of limitation, shotcrete, etc.);

GROUP 2: Bull gang mucker, track person; Chucktender, Cabletender; Concrete crew, including rodder and spreader; Loading and unloading agitator cars; Vibrator person, jack hammer, pneumatic tools (except driller)

GROUP 3: Blaster, driller, powder person; Chemical grout jet person; Cherry picker person; Grout gun person; Grout mixer person; Grout pump person; Jackleg miner; Jumbo person; Kemper and other pneumatic concrete placer operator; Miner, tunnel (hand or machine); Nozzle person; Operating of troweling and/or grouting machines; Powder person (primer house); Primer person; Sandblaster; Shotcrete person; Steel form raiser and setter; Timber person, retimber person, wood or steel; Tunnel Concrete finisher

GROUP 4: Diamond driller; Sandblaster; Shaft and raise work

LABO0220-004 07/01/2014

	Rates	Fringes
Brick Tender.....	$ 29.12	15.78

LABO0300-005 01/01/2014

	Rates	Fringes
Asbestos Removal Laborer.....	$ 28.00	15.25

SCOPE OF WORK: Includes site mobilization, initial site cleanup, site preparation, removal of asbestos-containing material and toxic waste, encapsulation, enclosure and disposal of asbestos- containing materials and toxic waste by hand or with equipment or machinery; scaffolding, fabrication of temporary wooden barriers and assembly of decontamination stations.

LABO0345-001 07/01/2014

	Rates	Fringes
LABORER (GUNITE)		
GROUP 1	$ 34.79	17.92
GROUP 2	$ 33.84	17.92
GROUP 3	$ 30.30	17.92

FOOTNOTE: GUNITE PREMIUM PAY: Workers working from a Bosn'n's Chair or suspended from a rope or cable shall receive 40 cents per hour above the foregoing applicable classification rates. Workers doing gunite and/or shotcrete work in a tunnel shall receive 35 cents per hour above the foregoing applicable classification rates, paid on a portal-to-portal basis. Any work performed on, in or above any smoke stack, silo, storage elevator or similar type of structure, when such structure is in excess of 75'-0" above base level and which work must be performed in whole or in part more than 75'-0" above base level, that work performed above the 75'-0" level shall be compensated for at 35 cents per hour above the applicable classification wage rate.

GUNITE LABORER CLASSIFICATIONS

GROUP 1: Rodmen, Nozzlemen

GROUP 2: Gunmen

GROUP 3: Reboundmen

LABO1184-001 07/01/2014

	Rates	Fringes
Laborers: (HORIZONTAL DIRECTIONAL DRILLING)		
(1) Drilling Crew Laborer	$ 31.65	13.33
(2) Vehicle Operator/Hauler	$ 31.82	13.33
(3) Horizontal Directional Drill Operator	$ 33.67	13.33
(4) Electronic Tracking Locator	$ 35.67	13.33
Laborers: (STRIPING/SLURRY SEAL)		
GROUP 1	$ 32.56	16.28
GROUP 2	$ 33.86	16.28
GROUP 3	$ 35.87	16.28
GROUP 4	$ 37.61	16.28

LABORERS - STRIPING CLASSIFICATIONS

GROUP 1: Protective coating, pavement sealing, including repair and filling of cracks by any method on any surface in parking lots, game courts and playgrounds; carstops; operation of all related machinery and equipment; equipment repair technician

GROUP 2: Traffic surface abrasive blaster; pot tender - removal of all traffic lines and markings by any method

(sandblasting, waterblasting, grinding, etc.) and preparation of surface for coatings. Traffic control person: controlling and directing traffic through both conventional and moving lane closures; operation of all related machinery and equipment

GROUP 3: Traffic delineating device applicator: Layout and application of pavement markers, delineating signs, rumble and traffic bars, adhesives, guide markers, other traffic delineating devices including traffic control. This category includes all traffic related surface preparation (sandblasting, waterblasting, grinding) as part of the application process. Traffic protective delineating system installer: removes, relocates, installs, permanently affixed roadside and parking delineation barricades, fencing, cable anchor, guard rail, reference signs, monument markers; operation of all related machinery and equipment; power broom sweeper

GROUP 4: Striper: layout and application of traffic stripes and markings; hot thermo plastic; tape traffic stripes and markings, including traffic control; operation of all related machinery and equipment

---

LABO1414-001 08/07/2013

	Rates	Fringes
LABORER		
PLASTER CLEAN-UP LABORER....	$ 27.45	16.36
PLASTER TENDER.....	$ 30.00	16.36

Work on a swing stage scaffold: $1.00 per hour additional.

PAIN0036-007 07/01/2014

	Rates	Fringes
Painters:		
(1) Repaint Including Lead Abatement.....	$ 23.84	12.28
(2) High Iron & Steel.....	$ 30.28	12.28
(3) Journeyman Painter including Lead Abatement....	$ 28.28	12.28
(4) Industrial.....	$ 31.12	12.33
(5) All other work.....	$ 28.28	12.28

REPAINT of any previously painted structure. Exceptions: work involving the aerospace industry, breweries, commercial recreational facilities, hotels which operate commercial establishments as part of hotel service, and sports facilities.

HIGH IRON & STEEL:
Aerial towers, towers, radio towers, smoke stacks, flag poles (any flag poles that can be finished from the ground with a ladder excluded), elevated water towers, steeples and domes in their entirety and any other extremely high and hazardous work, cooning steel, bos'n chair, or other similar devices, painting in other high hazardous work shall be classified as high iron &

steel

PAIN0036-008 10/01/2014

	Rates	Fringes
DRYWALL FINISHER/TAPER	$ 35.18	15.91

---

* PAIN0169-002 01/01/2015

	Rates	Fringes
GLAZIER	$ 34.83	19.75

PAIN1247-002 01/01/2014

	Rates	Fringes
SOFT FLOOR LAYER	$ 29.85	12.56

PLAS0200-001 08/06/2014

	Rates	Fringes
PLASTERER	$ 37.43	13.28

PLAS0500-002 07/07/2014

	Rates	Fringes
CEMENT MASON/CONCRETE FINISHER	$ 31.85	19.55

PLUM0016-001 07/01/2014

	Rates	Fringes
PLUMBER/PIPEFITTER		
Plumber and Pipefitter All other work except work on new additions and remodeling of bars, restaurant, stores and commercial buildings not to exceed 5,000 sq. ft. of floor space and work on strip malls, light commercial, tenant improvement and remodel work	$ 44.71	20.36
Work ONLY on new additions and remodeling of bars, restaurant, stores and commercial buildings not to exceed 5,000 sq. ft. of floor space	$ 43.33	19.38
Work ONLY on strip malls, light commercial, tenant improvement and remodel		

work.....$ 34.59 17.71

PLUM0345-001 07/01/2014

	Rates	Fringes
PLUMBER		
Landscape/Irrigation Fitter.	$ 29.27	19.75
Sewer & Storm Drain Work....	$ 33.24	17.13

ROOF0036-002 08/01/2014

	Rates	Fringes
ROOFER.....	$ 35.02	13.57

FOOTNOTE: Pitch premium: Work on which employees are exposed to pitch fumes or required to handle pitch, pitch base or pitch impregnated products, or any material containing coal tar pitch, the entire roofing crew shall receive $1.75 per hour "pitch premium" pay.

SFCA0669-014 07/01/2013

	Rates	Fringes
SPRINKLER FITTER.....	$ 32.98	19.35

SHEE0273-002 08/01/2013

	Rates	Fringes
SHEET METAL WORKER.....	$ 40.50	22.54

HOLIDAYS: New Year's Day, Martin Luther King Day, President's Day, Good Friday, Memorial Day, Indepdendence Day, Labor Day, Veterans Day,Thankisgiving Day & Friday after, Christmas Day

---

TEAM0011-002 07/01/2014

	Rates	Fringes
TRUCK DRIVER		
GROUP 1.....	$ 27.99	24.14
GROUP 2.....	$ 28.14	24.14
GROUP 3.....	$ 28.27	24.14
GROUP 4.....	$ 28.46	24.14
GROUP 5.....	$ 28.49	24.14
GROUP 6.....	$ 28.52	24.14
GROUP 7.....	$ 28.77	24.14
GROUP 8.....	$ 29.02	24.14
GROUP 9.....	$ 29.22	24.14
GROUP 10.....	$ 29.52	24.14
GROUP 11.....	$ 30.02	24.14
GROUP 12.....	$ 30.45	24.14

WORK ON ALL MILITARY BASES:

PREMIUM PAY: $3.00 per hour additional.
[29 palms Marine Base, Camp Roberts, China Lake, Edwards AFB, El Centro Naval Facility, Fort Irwin, Marine Corps Logistics Base at Nebo & Yermo, Mountain Warfare Training Center, Bridgeport, Point Arguello, Point Conception, Vandenberg AFB]

TRUCK DRIVERS CLASSIFICATIONS

GROUP 1: Truck driver

GROUP 2: Driver of vehicle or combination of vehicles - 2 axles; Traffic control pilot car excluding moving heavy equipment permit load; Truck mounted broom

GROUP 3: Driver of vehicle or combination of vehicles - 3 axles; Boot person; Cement mason distribution truck; Fuel truck driver; Water truck - 2 axle; Dump truck, less than 16 yds. water level; Erosion control driver

GROUP 4: Driver of transit mix truck, under 3 yds.; Dumpcrete truck, less than 6-1/2 yds. water level

GROUP 5: Water truck, 3 or more axles; Truck greaser and tire person ($0.50 additional for tire person); Pipeline and utility working truck driver, including winch truck and plastic fusion, limited to pipeline and utility work; Slurry truck driver

GROUP 6: Transit mix truck, 3 yds. or more; Dumpcrete truck, 6-1/2 yds. water level and over; Vehicle or combination of vehicles - 4 or more axles; Oil spreader truck; Dump truck, 16 yds. to 25 yds. water level

GROUP 7: A Frame, Swedish crane or similar; Forklift driver; Ross carrier driver

GROUP 8: Dump truck, 25 yds. to 49 yds. water level; Truck repair person; Water pull - single engine; Welder

GROUP 9: Truck repair person/welder; Low bed driver, 9 axles or over

GROUP 10: Dump truck - 50 yds. or more water level; Water pull - single engine with attachment

GROUP 11: Water pull - twin engine; Water pull - twin engine with attachments; Winch truck driver - $1.25 additional when operating winch or similar special attachments

GROUP 12: Boom Truck 17K and above

WELDERS - Receive rate prescribed for craft performing operation to which welding is incidental.

==========

Unlisted classifications needed for work not included within the scope of the classifications listed may be added after award only as provided in the labor standards contract clauses (29CFR 5.5 (a) (1) (ii)).

The body of each wage determination lists the classification and wage rates that have been found to be prevailing for the cited type(s) of construction in the area covered by the wage determination. The classifications are listed in alphabetical order of "identifiers" that indicate whether the particular rate is a union rate (current union negotiated rate for local), a survey rate (weighted average rate) or a union average rate (weighted union average rate).

Union Rate Identifiers

A four letter classification abbreviation identifier enclosed in dotted lines beginning with characters other than "SU" or "UAVG" denotes that the union classification and rate were prevailing for that classification in the survey. Example: PLUM0198-005 07/01/2014. PLUM is an abbreviation identifier of the union which prevailed in the survey for this classification, which in this example would be Plumbers. 0198 indicates the local union number or district council number where applicable, i.e., Plumbers Local 0198. The next number, 005 in the example, is an internal number used in processing the wage determination. 07/01/2014 is the effective date of the most current negotiated rate, which in this example is July 1, 2014.

Union prevailing wage rates are updated to reflect all rate changes in the collective bargaining agreement (CBA) governing this classification and rate.

Survey Rate Identifiers

Classifications listed under the "SU" identifier indicate that no one rate prevailed for this classification in the survey and the published rate is derived by computing a weighted average rate based on all the rates reported in the survey for that classification. As this weighted average rate includes all rates reported in the survey, it may include both union and non-union rates. Example: SULA2012-007 5/13/2014. SU indicates the rates are survey rates based on a weighted average calculation of rates and are not majority rates. LA indicates the State of Louisiana. 2012 is the year of survey on which these classifications and rates are based. The next number, 007 in the example, is an internal number used in producing the wage determination. 5/13/2014 indicates the survey completion date for the classifications and rates under that identifier.

Survey wage rates are not updated and remain in effect until a new survey is conducted.

Union Average Rate Identifiers

Classification(s) listed under the UAVG identifier indicate that no single majority rate prevailed for those classifications; however, 100% of the data reported for the classifications was union data. EXAMPLE: UAVG-OH-0010 08/29/2014. UAVG indicates that the rate is a weighted union average rate. OH indicates the state. The next number, 0010 in the example, is an internal number used in producing the wage determination. 08/29/2014 indicates the survey completion date for the classifications and rates under that identifier.

A UAVG rate will be updated once a year, usually in January of each year, to reflect a weighted average of the current negotiated/CBA rate of the union locals from which the rate is based.

WAGE DETERMINATION APPEALS PROCESS

1.) Has there been an initial decision in the matter? This can be:

* an existing published wage determination
* a survey underlying a wage determination
* a Wage and Hour Division letter setting forth a position on a wage determination matter
* a conformance (additional classification and rate) ruling

On survey related matters, initial contact, including requests for summaries of surveys, should be with the Wage and Hour Regional Office for the area in which the survey was conducted because those Regional Offices have responsibility for the Davis-Bacon survey program. If the response from this initial contact is not satisfactory, then the process described in 2.) and 3.) should be followed.

With regard to any other matter not yet ripe for the formal process described here, initial contact should be with the Branch of Construction Wage Determinations. Write to:

Branch of Construction Wage Determinations
Wage and Hour Division
U.S. Department of Labor
200 Constitution Avenue, N.W.
Washington, DC 20210

2.) If the answer to the question in 1.) is yes, then an interested party (those affected by the action) can request review and reconsideration from the Wage and Hour Administrator (See 29 CFR Part 1.8 and 29 CFR Part 7). Write to:

Wage and Hour Administrator
U.S. Department of Labor
200 Constitution Avenue, N.W.
Washington, DC 20210

The request should be accompanied by a full statement of the interested party's position and by any information (wage payment data, project description, area practice material, etc.) that the requestor considers relevant to the issue.

3.) If the decision of the Administrator is not favorable, an interested party may appeal directly to the Administrative Review Board (formerly the Wage Appeals Board). Write to:

Administrative Review Board
U.S. Department of Labor
200 Constitution Avenue, N.W.
Washington, DC 20210

4.) All decisions by the Administrative Review Board are final.

==========

END OF GENERAL DECISION

PAGE LEFT BLANK INTENTIONALLY

APPENDIX B

REVISED STANDARD SPECIFICATIONS

DATED 07-18-14

^^^

DIVISION II GENERAL CONSTRUCTION

10 GENERAL

05-30-14

Replace the headings and paragraphs in section 10 with:

04-19-13

10-1 GENERAL

10-1.01 GENERAL

Section 10 includes general specifications for general construction work.

10-1.02 WORK SEQUENCING

Before obliterating any traffic stripes, pavement markings, and pavement markers to be replaced at the same location, reference the stripes, markings, and markers. Include limits and transitions with control points to reestablish the new stripes, markings, and markers.

10-1.03 TIME CONSTRAINTS

Reserved

10-1.04 TRAINING AND MEETINGS

Training and meetings are held at times and locations you and the Engineer agree to.

10-1.05–10-1.10 RESERVED

10-2 SUSTAINABLE DESIGN REQUIREMENTS

10-2.01 GENERAL

10-2.01A General

Reserved

10-2.01B–10-2.01H Reserved

10-2.02 *CALGREEN* TIER 1

10-2.02A–10-2.02H Reserved

10-2.03 LEED

10-2.03A–10-2.03H Reserved

10-3 RESERVED

Replace section 10-4 with:

05-30-14

10-4 WATER USAGE

Section 10-4 includes general specifications for your use of water for construction activities.

The Department encourages you to conserve water in all construction activities.

The Engineer notifies you of any (1) water shortage or (2) mandate from a local water authority to ration water. Within 10 days of the notification, submit a water conservation plan. The plan must include:

1. List of construction activities that require water
2. Measures you will implement for each activity to conserve water
3. Method for curing concrete other than the water method if included in the work

4. Dust palliative you will use for dust control

Any unavailability of water that delays a controlling activity is a material shortage.

Replace section 10-5 with:

05-30-14

10-5 DUST CONTROL

Section 10-5 includes general specifications for controlling dust resulting from the work.

Prevent and alleviate dust by:

1. Applying a dust palliative under section 18
2. Applying temporary soil stabilization under section 13-5
3. Managing material stockpiles under section 13-4.03C(3)

04-19-13

10-6 JOB SITE WATER CONTROL

10-6.01 GENERAL

Section 10-6 includes specifications for controlling water to provide a dry working area at the job site.

10-6.02 WATER-FILLED COFFERDAM

Reserved

10-6.03–10-6.10 RESERVED

10-7–10-20 RESERVED

^^

11 QUALITY CONTROL AND ASSURANCE

07-19-13

Replace section 11-2 with:

07-19-13

11-2 RESERVED

Replace the table in the 3rd paragraph of section 11-3.01A with:

07-19-13

AWS code	Year of adoption
D1.1	2010
D1.3	2008
D1.4	2011
D1.5	2010
D1.6	2007
D1.8	2009

Replace "does" in the definition of "continuous inspection" in section 11-3.01B with:

07-19-13

do

Replace "gross nonconformance" and its definition in section 11-3.01B with:

07-19-13

gross nonconformance: Rejectable indications are present in more than 20 percent of the tested weld length.

Replace the introductory clause in the 1st paragraph of section 11-3.01C with:

07-19-13

Replace clause 6.1.3 of AWS D1.1, the 1st paragraph of clause 7.1.2 of AWS D1.4, and clause 6.1.2 of AWS D1.5 with:

Replace the 3rd paragraph of section 11-3.01C with:

07-19-13

For each inspection, including fit-up, WPS verification, and final weld inspection, the QC Inspector must confirm and document compliance with the specifications, AWS welding codes, and any referenced drawings.

Replace the paragraphs in section 11-3.01D with:

07-19-13

The Engineer has the authority to verify the qualifications or certifications of any welder, QC Inspector, or NDT personnel to specified levels by retests or other means determined by the Engineer. If welding will be performed without gas shielding, then qualification must also include welding without gas shielding.

Replace clause 6.14.6.1 of AWS D1.1, clause 7.8 of AWS D1.4, and clause 6.1.3.4 of AWS D1.5 with:

> Personnel performing NDT must be qualified and certified under American Society for Nondestructive Testing (ASNT) Recommended Practice No. SNT-TC-1A and the written practice of the NDT firm. The written practice of the NDT firm must comply with or exceed the guidelines of the ASNT Recommended Practice No. SNT-TC-1A. Individuals who perform NDT, review the results, and prepare the written reports must be one of the following:
>
> 1. Certified NDT Level II technicians
> 2. Level III technicians certified to perform the work of Level II technicians

Replace the heading and the 1st through 3rd paragraphs of section 11-3.01E with:

07-19-13

11-3.01E Weld Joint Details

If weld joint details proposed for use in the work are not prequalified under clause 3 of AWS D1.1 or figure 2.4 or 2.5 of AWS D1.5, submit the proposed WPS and the intended weld joint locations.

Upon authorization of the proposed joint detail locations and qualification of the proposed joint details, welders and welding operators using these details must weld an additional qualification test plate using the WPS variables and the weld joint detail to be used in production. The test plate must:

1. Have the maximum thickness to be used in production and a minimum length of 18 inches.
2. Be mechanically and radiographically tested. Mechanical and radiographic testing and acceptance criteria must comply with the applicable AWS codes.

If a nonprequalified weld joint configuration is proposed using a combination of WPSs for work welded under AWS D1.1, you may conduct a single test combining the WPSs to be used in production, if the essential variables, including weld bead placement, of each process are limited to those established in table 4.5 of AWS D1.1.

Replace the 1st paragraph of section 11-3.01F with:

07-19-13

Replace paragraph 3 of clause 6.26.3.2 of AWS D1.5 with:

3. If indications that exhibit these planar characteristics are present at scanning sensitivity, or other evidence exists to suggest the presence of transverse cracks, a more detailed evaluation of the discontinuity by other means must be performed (e.g., alternate UT techniques, RT, grinding, or gouging for visual inspection or MT of the excavated areas.). For welds that have transverse cracks, excavate the full length of the crack plus 2 inches of weld metal on each side adjacent to the crack and reweld.

Replace "section" in the 2nd paragraph of section 11-3.01F with:

07-19-13

clause

Replace the 1st paragraph of section 11-3.02A with:

07-19-13

Except for stud welding, section 11-3.02 applies to (1) work welded under sections 49, 52, 55, and 75-1.03E and (2) work in section 99 that must comply with an AWS welding code.

Replace the 4th through 6th paragraphs of section 11-3.02C(2) with:

07-19-13

Submit an amended welding QC plan or an addendum to the welding QC plan for any changes to:

1. WPSs
2. NDT firms
3. QC personnel or procedures
4. NDT personnel or procedures
5. Systems for tracking and identifying welds
6. Welding personnel

Allow 15 days for the Engineer's review of an amended welding QC plan or an addendum to the welding QC plan.

Submit 7 copies of each authorized QC plan and any authorized addendums. Make 1 copy available at each location where work is performed.

Replace the 1st paragraph of section 11-3.02C(3) with:

07-19-13

Submit a welding report within 7 days following the performance of any welding. The welding report must include:

1. Daily production log for welding for each day that welding is performed
2. Reports of all visual weld inspections and NDT performed, whether specified, additional, or informational
3. Radiographs and radiographic reports, and other required NDT reports
4. Summary of welding and NDT activities that occurred during the reporting period
5. Reports of each application of heat straightening
6. Summarized log listing the rejected lengths of weld by welder, position, process, joint configuration, and piece number
7. Documentation that you have:
   - 7.1. Evaluated all radiographs and radiograph reports and NDT and NDT reports
   - 7.2. Corrected all rejectable deficiencies and that all repaired welds have been reexamined using the required NDT and found acceptable
8. Reports or chart recordings of each application of any stress relieving used

9. Reports and chart recordings for any electroslag welding used

Add between "radiographic" and "envelopes" in the introductory clause in the 3rd paragraph of section 11-3.02C(3):

07-19-13

film

07-19-13

Delete the 3rd sentence in the 5th paragraph of section 11-3.02C(3).

Replace the introductory clause in the 1st paragraph of section 11-3.02D with:

07-19-13

Clauses 6.1.4.1 and 6.1.4.3 of AWS D1.1, the 2nd paragraph of clause 7.1.2 of AWS D1.4, clauses 6.1.3.1 through 6.1.3.3 of AWS D1.5, and clause 7.2.3 of AWS D1.8 are replaced with:

Replace items 1 and 2 in the list in the 2nd paragraph of section 11-3.02D with:

07-19-13

1. Work is welded at a permanent fabrication or manufacturing plant that is certified under the AISC Certification Program for Steel Bridge Fabricators, Intermediate Bridges, and Fracture-Critical Member endorsement if required.
2. Structural steel for building construction work is performed at a permanent fabrication or manufacturing plant that is certified under the AISC Quality Certification Program, Category STD, Standard for Steel Building Structures.

07-19-13

Delete the 3rd paragraph of section 11-3.02D.

Replace the 1st sentence in the 4th paragraph of section 11-3.02D with:

07-19-13

Except for the exempt facilities identified above, an authorized independent third party must witness the qualification tests for welders or welding operators.

Replace the paragraph in section 11-3.02F with:

07-19-13

Welding procedures qualification for work welded under AWS D1.5 must comply with clause 5.12 or 5.12.4 of AWS D1.5 and the following:

1. Unless considered prequalified, qualify fillet welds in each position. Conduct the fillet weld soundness test using the essential variables of the WPS as established by the PQR.
2. For qualifying joints that do not comply with figures 2.4 and 2.5 of AWS D1.5, conduct the test complying with figure 5.3 using the welding parameters that were established for the test conducted complying with figure 5.1.
3. Macroetch tests are required for WPS qualification tests, and acceptance must comply with clause 5.19.3 of AWS D1.5.
4. If a nonstandard weld joint is to be made using a combination of WPSs, you may conduct a test under figure 5.3, combining the qualified or prequalified WPSs to be used in production, if the essential variables, including weld bead placement, of each process are limited to those established in table 5.3 of AWS D1.5.
5. Before preparing mechanical test specimens, inspect the PQR welds by visual and radiographic tests. The backing bar must be 3 inches in width and must remain in place during NDT. Results of the

visual and radiographic tests must comply with clause 6.26.2 of AWS D1.5 excluding clause 6.26.2.2. All other requirements for clause 5.17 are applicable.

Add to the list in the 3rd paragraph of section 11-3.02G:

07-19-13

3. Repairs not included in the welding QC plan

Replace the 1st sentence of the 4th paragraph of section 11-3.02G with:

07-19-13

Requests to perform 3rd-time excavations, repairs of cracks, or repairs not included in the welding QC plan must include an engineering evaluation.

^^

12 TEMPORARY TRAFFIC CONTROL

05-30-14

Replace the 5th paragraph of section 12-3.01A(1) with:

05-30-14

Repair or replace traffic-handling equipment and devices damaged from any cause during the Contract, including repainting if necessary. The condition of temporary traffic control devices must comply with the current American Traffic Safety Services Association publication "Quality Guidelines for Temporary Traffic Control Devices and Features."

Replace the 1st paragraph of section 12-3.01A(4) with:

10-19-12

Category 2 temporary traffic control devices must be on FHWA's list of acceptable, crashworthy Category 2 hardware for work zones. This list is available on FHWA's Safety Program Web site.

Replace "project" in the 4th paragraph of section 12-3.02C with:

10-19-12

work

Add after "Display" in item 4 in the list in the 2nd paragraph of section 12-3.03B:

04-19-13

or Alternating Diamond

Replace "project" in the 3rd paragraph of section 12-3.07C with:

10-19-12

work

Add to section 12-3:

07-19-13

12-3.18 AUTOMATED WORK ZONE INFORMATION SYSTEM

Reserved

12-3.19–12-3.25 RESERVED

Replace the 7th through 9th paragraphs of section 12-4.02A with:

07-19-13

If pedestrian traffic is allowed to pass through construction areas, provide a temporary pedestrian facility through the construction areas within the highway. Include protective overhead covering as necessary to ensure protection from falling objects and drippings from overhead structures.

At locations where pedestrian openings through falsework are required, provide a temporary pedestrian facility with protective overhead covering during all bridge construction activities.

Temporary pedestrian facilities must comply with section 12-7.

If an activity requires a closure of a walkway, another walkway must be made available nearby, off of the traveled way.

07-19-13

Delete the 12th paragraph of section 12-4.02A.

Replace section 12-4.03 with:

07-19-13

12-4.03 CLOSURE SCHEDULES AND CONDITIONS

12-4.03A General

Submit closure schedule requests and closure schedule amendments using LCS to show the locations and times of the requested closures.

The Department provides LCS training. Request the LCS training at least 30 days before submitting the 1st lane closure request. The Department provides the training within 15 days after your request. The training may be web based.

Except for web-based training, the training is held at a time and location you and the Engineer agree to.

For web-based training, the Engineer provides you the website address to access the training.

Within 5 business days after completion of the training, the Department provides LCS accounts and user identifications to your assigned, trained representatives.

Each representative must maintain a unique password and current user information in the LCS.

12-4.03B Closure Schedules

Every Monday by noon, submit a closure schedule request of planned closures for the next week period. The next week period is defined as Sunday noon through the following Sunday noon.

Submit a closure schedule request not less than 25 days and not more than 125 days before the anticipated start of any activity that reduces:

1. Horizontal clearances of traveled ways, including shoulders, to 2 lanes or less due to activities such as temporary barrier placement and paving
2. Vertical clearances of traveled way, including shoulders, due to activities such as pavement overlays, overhead sign installation, falsework, or girder erection

Submit closure schedule amendments, including adding additional closures, by noon at least 3 business days before a planned closure.

Cancel closure requests using LCS at least 48 hours before the start time of the closure.

You will be notified through LCS of unauthorized closures or closures that require coordination with other parties as a condition for authorization.

The Engineer may reschedule a closure cancelled due to unsuitable weather.

If a closure is not opened to traffic by the specified time, suspend work. No further closures are allowed until the Engineer has reviewed and authorized a work plan submitted by you that ensures that future closures will be opened to traffic by the specified time. Allow 2 business days for review of your proposed work plan. The Department does not compensate you for your losses due to the suspension of work resulting from the late opening of closures.

Notify the Engineer of delays in your activities caused by:

1. Your closure schedule request being denied although your requested closures are within the specified time frame allowed for closures. The Department does not compensate you for your losses due to amendments to the closure schedule that are not authorized.
2. Your authorized closure being denied.

If you are directed to remove a closure before the time designated in the authorized closure schedule, you will be compensated for the delay.

12-4.03C Contingency Plan

Section 12-4.03C applies if a contingency plan is specified in the special provisions or if a contingency plan is requested.

If a contingency plan is requested, submit the contingency plan within 1 business day of the request.

The contingency plan must identify the activities, equipment, processes, and materials that may cause a delay in the opening of a closure to traffic. The plan must include:

1. List of additional or alternate equipment, materials, or workers necessary to ensure continuing activities and on-time opening of closures if a problem occurs. If the additional or alternate equipment, materials, or workers are not on site, specify their location, the method for mobilizing these items, and the required time to complete mobilization.
2. General time-scaled logic diagram displaying the major activities and sequence of planned operations. For each activity, identify the critical event when the contingency plan will be activated.

Based on the Engineer's review, additional materials, equipment, workers, or time to complete activities from that specified in the contingency plan may be required.

Submit revisions to a contingency plan at least 3 business days before starting the activity requiring a contingency plan. Allow 2 business days for review of the revised contingency plan.

Replace section 12-7 with:

07-19-13

12-7 TEMPORARY PEDESTRIAN FACILITIES

12-7.01 GENERAL

Section 12-7 includes specifications for constructing temporary pedestrian facilities.

Temporary pedestrian facilities must comply with the *California MUTCD*, Part 6, Chapter 6D, "Pedestrian and Worker Safety."

Design temporary pedestrian facilities with protective overhead covering to support all imposed loads.

The design load and maximum allowable stresses for temporary pedestrian facilities with protective overhead covering must comply with section 48-2.01D(3). The minimum design live load for the temporary pedestrian facilities with protective overhead covering must be 150 psf for the entire structure.

The minimum width of the temporary pedestrian facilities with protective overhead covering between the inside face of handrails must be 60 inches. The clear height of the temporary pedestrian facilities with protective overhead covering measured from the floor surface to the canopy overhead must be at least 8 feet. Provide adequate lighting at all times. Lighting must comply with section 86-6.13.

Submit shop drawings with supporting calculations for temporary pedestrian facilities with protective overhead covering. Shop drawings and calculations must be signed by an engineer who is registered as a civil engineer in the State.

12-7.02 MATERIALS

Walkways must be surfaced with HMA, portland cement concrete, or wood. The surface must be skid resistant and free of irregularities.

Hand railings must be S4S lumber and painted white.

Protective overhead covering of temporary pedestrian facilities must be plywood at least 3/4 inch thick or wood planking with a nominal thickness of 2 inches minimum.

12-7.03 CONSTRUCTION

Construct hand railings on each side of a temporary pedestrian facility as necessary to protect pedestrian traffic from hazards due to work activities or adjacent vehicular traffic.

Maintain temporary pedestrian facilities in good condition and keep them clear of obstructions.

12-7.04 PAYMENT

Not Used

^^

13 WATER POLLUTION CONTROL

05-30-14

04-19-13

Delete item 3 in the list in the 4th paragraph of section 13-1.01A.

Add to section 13-1.01A:

11-15-13

Comply with the Department's general permit issued by the State Water Resources Control Board for *Order No. 2012-0011-DWQ, NPDES No. CAS000003, National Pollutant Discharge Elimination System (NPDES) Permit, Statewide Storm Water Permit and Waste Discharge Requirements (WDRs) for the State of California, Department of Transportation (Caltrans)*. The Department's general permit governs stormwater and nonstormwater discharges from the Department's properties, facilities, and activities. The Department's general permit may be viewed at the Web site for the State Water Resources Control Board, Storm Water Program, Caltrans General Permit.

Add to the list in the 1st paragraph of section 13-1.01D(3)(b):

10-21-11

3. Have completed SWRCB approved QSD training and passed the QSD exam

Add to the list in the 2nd paragraph of section 13-1.01D(3)(b):

10-21-11

3. Have completed SWRCB approved QSP training and passed the QSP exam

Replace "NEL violation" in item 3.6.2 in the list in the 1st paragraph of section 13-1.01D(3)(c) with:

04-19-13

receiving water monitoring trigger

Replace the 1st paragraph in section 13-2.01B with:

04-19-13

Within 7 days after Contract approval, submit 2 copies of your WPCP for review. Allow 5 business days for review.

After the Engineer authorizes the WPCP, submit an electronic copy and 3 printed copies of the authorized WPCP.

If the RWQCB requires review of the authorized WPCP, the Engineer submits the authorized WPCP to the RWQCB for its review and comment. If the Engineer orders changes to the WPCP based on the RWQCB's comments, amend the WPCP within 3 business days.

Replace the 1st paragraph in section 13-3.01B(2)(a) with:

04-19-13

Within 15 days of Contract approval, submit 3 copies of your SWPPP for review. The Engineer provides comments and specifies the date when the review stopped if revisions are required. Change and resubmit a revised SWPPP within 15 days of receiving the Engineer's comments. The Department's review resumes when a complete SWPPP has been resubmitted.

When the Engineer authorizes the SWPPP, submit an electronic copy and 4 printed copies of the authorized SWPPP.

If the RWQCB requires review of the authorized SWPPP, the Engineer submits the authorized SWPPP to the RWQCB for its review and comment. If the Engineer requests changes to the SWPPP based on the RWQCB's comments, amend the SWPPP within 10 days.

Replace "NELs" in item 3.1 in the 3rd paragraph of section 13-3.01B(2)(a) with:

04-19-13

receiving water monitoring triggers

Replace section 13-3.01B(6)(c) with:

04-19-13

13-3.01B(6)(c) Receiving Water Monitoring Trigger Report

Whenever a receiving water monitoring trigger is exceeded, notify the Engineer and submit a receiving water monitoring trigger report within 48 hours after conclusion of a storm event. The report must include:

1. Field sampling results and inspections, including:
   1.1. Analytical methods, reporting units, and detection limits
   1.2. Date, location, time of sampling, visual observation and measurements
   1.3. Quantity of precipitation from the storm event
2. Description of BMPs and corrective actions

Replace "NEL" in the 6th paragraph of section 13-3.01C(1) with:

04-19-13

receiving water monitoring trigger

Replace section 13-3.01C(3) with:

04-19-13

13-3.01C(3) Receiving Water Monitoring Trigger

For a risk level 3 project, receiving water monitoring triggers must comply with the values shown in the following table:

Receiving Water Monitoring Trigger

Parameter	Test method	Detection limit (min)	Unit	Value
pH	Field test with calibrated portable instrument	0.2	pH	Lower limit = 6.0 Upper limit = 9.0
Turbidity	Field test with calibrated portable instrument	1	NTU	500 NTU max

The storm event daily average for storms up to the 5-year, 24-hour storm must not exceed the receiving water monitoring trigger for turbidity.

The daily average sampling results must not exceed the receiving water monitoring trigger for pH.

04-19-13

Delete "and NELs are violated" in the 3rd paragraph of section 13-3.03C.

Replace "working days" at each occurrence in section 13-3.04 with.

10-19-12

original working days

04-19-13

Delete the 1st sentence in the 2nd paragraph of section 13-4.03C(3).

Add between the 2nd and 3rd paragraphs of section 13-4.03C(3):

04-19-13

Manage stockpiles by implementing water pollution control practices on:

1. Active stockpiles before a forecasted storm event
2. Inactive stockpiles according to the WPCP or SWPPP schedule

05-30-14

Delete the 7th paragraph of section 13-4.03C(3).

Replace the heading of section 13-4.03E(1) with:

05-30-14

General

05-30-14

Delete the 1st through 5th sentences in the 2nd paragraph of section 13-4.03E(1).

Replace the 1st sentence of the 1st paragraph of section 13-4.03E(3) with:

05-30-14

Limit vehicle and equipment cleaning or washing at the job site to that needed for safety and protection of the equipment and compliance with PLACs.

Replace the paragraph in section 13-4.04 with:

04-20-12

Not Used

Replace "20-7.02D(6)" in section 13-5.02C with:

07-19-13

20-5.03E

10-19-12

Delete "or stockpile" in the 3rd paragraph of section 13-5.02F.

Replace "20-7.03I(10)" in section 13-5.03C with:

07-19-13

20-5.03E(3)

Replace section 13-5.03F with:

04-20-12

13-5.03F Reserved

10-19-12

Delete "or stockpile" in item 1 in the list in the 1st paragraph of section 13-5.03K.

10-19-12

Delete the 3rd paragraph of section 13-5.03K.

Replace the 2nd sentence in the 1st paragraph of section 13-9.01A with:

10-19-12

You may use any of the following systems for temporary concrete washout:

1. Temporary concrete washout facility
2. Portable temporary concrete washout
3. Temporary concrete washout bin

Replace the 2nd paragraph of section 13-9.01B with:

10-19-12

Retain and submit an informational submittal for records of disposed concrete waste.

10-19-12

Delete the 4th paragraph of section 13-9.01B.

10-19-12

Delete "if authorized" in the 1st sentence in the 1st paragraph of section 13-9.02A.

Replace "at least 3-inch" in the 3rd sentence in the 1st paragraph of section 13-9.02A with:

10-19-12

6-inch

^^

14 ENVIRONMENTAL STEWARDSHIP

05-30-14

Replace section 14-9.03 with:

05-30-14

14-9.03 RESERVED

^^

15 EXISTING FACILITIES

07-19-13

Replace section 15-1.03D with:

07-19-13

15-1.03D Reserved

Replace "metal beam guard railing" in the 1st paragraph of section 15-2.01C with:

07-19-13

guardrail

Replace the paragraphs of section 15-2.02B(1) with:

07-19-13

Section 15-2.02B includes specifications for removing pavement, base, subbase, and subgrade.

If only a portion of the pavement is removed, saw-cut the outline of the removal area on a neat line and with a power-driven saw before removing.

For asphalt concrete pavement, saw cuts must be at least 2 inches deep unless otherwise described.

Replace section 15-2.02B(4)(b) with:

07-19-13

15-2.02B(4)(b) Reserved

Add to section 15-2.02B:

07-19-13

15-2.02B(5) Remove Concrete Pavement

15-2.02B(5)(a) General

Remove only the portion of pavement to be replaced or repaired during the same lane closure. If there is overlying material on the concrete pavement, remove it with the pavement.

Do not impact the surface within 18 inches of the pavement to remain in place. Use removal methods that do not damage the remaining pavement and base. Slab-lifting equipment must attach to the pavement.

Instead of disposing of removed concrete pavement by removing it from the job site, you may dispose of it under section 15-3.01.

15-2.02B(5)(b) Saw Cuts

Saw cut using a diamond blade and make cuts perpendicular to the pavement surface. Saw cutting is not required where concrete pavement is adjacent to asphalt concrete pavement.

Saw cut (1) no more than 2 days before removing pavement and (2) such that traffic will not dislodge any pavement piece or segment. Saw cut perpendicular to the traveled way except you may cut parallel or

diagonal to the traveled way when removing the pavement during the same lane closure as the saw cutting.

You may make additional saw cuts within the sawed outline.

Saw cuts must be the full depth of the pavement unless otherwise shown.

Saw cut at longitudinal and transverse joints to remove entire slabs. For partial-slab areas, the Engineer determines the exact saw-cut locations.

15-2.02B(5)(c) Reserved

15-2.02B(6) Reserved

15-2.02B(7) Payment

Reserved

Replace section 15-2.02G with:

07-19-13

15-2.02G Remove Guardrail

Where removing guardrail, remove any concrete anchors and steel foundation tubes.

Replace the 1st paragraph of section 15-2.02K with:

07-19-13

Box culverts, concrete pipes, inlets, headwalls, and endwalls must be completely removed if any portion of these structures is (1) within 3 feet of the grading plane in excavation areas, (2) within 1 foot of original ground in embankment areas, or (3) shown to be removed.

Replace "Metal beam guard railing" in the table in the 2nd paragraph of section 15-2.03A(2)(a) with:

07-19-13

Guardrail

Replace the heading of section 15-2.03B with:

07-19-13

Salvage Guardrail

Replace the heading of section 15-2.04D with:

07-19-13

Reconstruct Guardrail

Replace section 15-2.09D with:

07-19-13

15-2.09D Reserved

Replace the 4th paragraph of section 15-2.10B with:

01-18-13

Instead of using new materials similar in character to those in the existing structure, you may use raising devices to adjust a manhole to grade. Before starting paving work, measure and fabricate raising devices. Raising devices must:

1. Comply with the specifications for section 75 except that galvanizing is not required
2 Have a shape and size that matches the existing frame

3. Be match marked by painting identification numbers on the device and corresponding structure
4. Result in an installation that is equal to or better than the existing one in stability, support, and nonrocking characteristics
5. Be fastened securely to the existing frame without projections above the surface of the road or into the clear opening

Replace the heading of section 15-2.10D with:

07-19-13

Adjust Guardrail

Replace the paragraphs of section 15-3.01 with:

07-19-13

Section 15-3 includes specifications for removing all or a portion of a concrete facility.

Concrete facilities include curbs, gutters, gutter depressions, sidewalks, driveways, slope paving, island paving, barriers, retaining walls, sound walls, minor structures, aprons, spillways, and dams.

Where broken-concrete slope protection is shown, use removed concrete for the construction of the broken-concrete slope protection.

Instead of disposing of removed concrete by removing it from the job site, you may dispose of it on the job site by one of the following methods:

1. Burying it in embankments at authorized locations. Removed concrete must be broken into pieces that can be readily handled and incorporated into embankments and placed at a depth of at least 3 feet below finished grade and slope lines. Concrete must not be buried in areas where piling is to be placed or within 10 feet of trees, pipelines, poles, buildings or other permanent objects or structures.
2. Placing it at authorized locations. The removed concrete must not present an unsightly appearance from the highway.

Replace the paragraph of section 15-3.02 with:

07-19-13

Not Used

07-19-13

Delete the 5th paragraph of section 15-3.03.

Add to the end of section 15-4.01A(2):

04-19-13

Allow 20 days for review of the bridge removal work plan.

Replace the 1st paragraph of section 15-5.01C(1) with:

10-19-12

Before starting deck rehabilitation activities, complete the removal of any traffic stripes, pavement markings, and pavement markers.

Replace the 2nd and 3rd paragraphs of section 15-5.01C(2) with:

10-19-12

Perform the following activities in the order listed:

1. Abrasive blast the deck surface with steel shot. Perform abrasive blasting after the removal of any unsound concrete and placement of any rapid setting concrete patches.

2. Sweep the deck surface.
3. Blow the deck surface clean using high-pressure air.

Replace the 2nd paragraph of section 15-5.01C(4) with:

10-19-12

Before removing asphalt concrete surfacing, verify the depth of the surfacing at the supports and midspans of each structure (1) in each shoulder, (2) in the traveled way, and (3) at the roadway crown, if a crown is present.

04-19-13

Delete "and concrete expansion dams" in the 3rd paragraph of section 15-5.01C(4).

Replace the 2nd paragraph of section 15-5.03A(2) with:

10-19-12

For a contract with less than 60 original working days, submit certificates of compliance for the filler material and bonding agents.

Replace "51-1.02C" in the 1st paragraph of section 15-5.03B with:

04-19-13

51-1.02F

Replace the 4th paragraph of section 15-5.03B with:

10-19-12

For a contract with less than 60 original working days, alternative materials must be authorized before use.

Add between the 5th and 6th paragraphs of section 15-5.03C:

10-19-12

The final surface finish of the patched concrete surface must comply with section 51-1.03F.

10-19-12

Delete the 4th paragraph of section 15-5.05C.

Replace "51-1.03F(5)" in the 3rd paragraph of section 15-5.06C(1) with:

07-19-13

51-1.01D(4)(b)

Replace "51-1.03E(5)" in the 5th paragraph of section 15-5.06C(1) with:

10-19-12

51-1.03F(5)

10-19-12

Delete the 9th paragraph of section 15-5.06C(1).

04-19-13

Delete the 15th paragraph of section 15-5.06C(1).

Add between the 18th and 19th paragraphs of section 15-5.06C(1):

07-19-13

Texture the polyester concrete surface before gelling occurs by longitudinal tining under 51-1.03F(5)(b)(iii), except do not perform initial texturing.

Replace section 15-5.06C(2) with:

04-19-13

15-5.06C(2) Reserved

04-19-13

Delete the 3rd paragraph of section 15-5.06D.

Replace the 1st paragraph in section 15-5.07B(4) with:

10-19-12

Payment for furnishing dowels is not included in the payment for core and pressure grout dowel.

Replace section 15-5.09 with:

04-19-13

15-5.09 POLYESTER CONCRETE EXPANSION DAMS

15-5.09A General

Section 15-5.09 includes specifications for constructing polyester concrete expansion dams.

Polyester concrete expansion dams must comply with the specifications for polyester concrete overlays in section 15-5.06, except a trial slab is not required.

Reinforcement must comply with section 52.

15-5.09B Materials

Not Used

15-5.09C Construction

For new asphalt concrete overlays, place the asphalt concrete overlay before starting polyester concrete activities. Saw cut and remove asphalt concrete at expansion dam locations.

For existing asphalt concrete overlays, remove expansion dams and asphalt concrete to the limits shown. Removing expansion dams must comply with section 15-4 except a bridge removal work plan is not required.

Where a portion of the asphalt concrete overlay is to remain, saw cut a 2-inch-deep neat line along the edge to remain in place before removing the asphalt concrete. Do not damage the existing surfacing to remain in place.

Prepare the deck surface under section 15-5.01C(2).

You may use a mechanical mixer to mix the polyester concrete for expansion dams. The mixer capacity must not exceed 9 cu ft unless authorized. Initiate the resin and thoroughly blend it immediately before mixing it with the aggregate. Mix the polyester concrete for at least 2 minutes before placing.

The application rate of methacrylate resin must be approximately 100 sq ft/gal.

You may place and finish expansion dams using hand methods.

Protect expansion dams from moisture, traffic, and equipment for at least 4 hours after finishing.

For expansion dams over 6 feet long, install 1/4-inch-wide joint material at 6-foot intervals across the width of the expansion dam. Joint material must be either expanded polyurethane or expanded polyethylene.

15-5.09D Payment

Not Used

Add to section 15-6.01A(3)(a):

07-19-13

Within 5 days of completing annular space grouting at a culvert, submit the grouting records.

Replace "41-1.01" in item 10.3 in the list in the 2nd paragraph of section 15-6.01A(3)(d) with:

07-19-13

41-2

Replace "41-1.02" in 1st paragraph of section 15-6.01B(2) with:

07-19-13

41-2

Replace the heading of section 15-6.04 with:

01-18-13

INVERT PAVING

Replace the 1st paragraph of section 15-6.13A(1) with:

07-19-13

Section 15-6.13 includes specifications for installing machine spiral wound PVC pipeliners directly into the culvert.

Replace the heading of section 15-6.13B with:

07-19-13

Machine Spiral Wound PVC Pipeliners, Grouted

^^

DIVISION III GRADING

16 CLEARING AND GRUBBING

07-19-13

Replace "20-3.03B(4)" in the 3rd paragraph of section 16-1.01 with:

07-19-13

20-2.02C(2)

Replace "20-1.03D" in the 2nd paragraph of section 16-1.03B with:

07-19-13

20-3.01C(2)

^^

18 DUST PALLIATIVE

05-30-14

Replace section 18 with:

05-30-14

18 DUST PALLIATIVES

18-1.01 GENERAL

18-1.01A Summary

Section 18 includes specifications for applying dust palliatives.

The dust palliative must be any of the following:

1. Water
2. Dust suppressant
3. Dust control binder

Water must comply with section 17.

18-1.01B Definitions

Reserved

18-1.01C Submittals

If a dust suppressant or dust control binder is to be used, submit a dust treatment plan at least 15 days before starting job site activities. The dust treatment plan must include:

1. Product name and type
2. Manufacturer's name
3. Polymer emulsion type if synthetic polymer emulsion is used, including identification of:
   3.1. Individual components greater than 5 percent by volume in blends of polymers of different compositions
   3.2. Additives greater than 2 by volume
4. MSDS
5. Proposed methods for applying products
6. Application rates and number of passes
7. Required weather conditions for application, including ambient and surface temperatures, wind conditions, and allowable period before expected precipitation
8. Drying time or curing time required before traffic is allowed on the treated surface

Submit the manufacturer's instructions for the material to be used as an informational submittal.

Submit a certificate of compliance for the dust suppressant, dust control binders, and fibers.

For dust suppressants, include with the certificate of compliance:

1. Test results verifying compliance with the quality characteristic requirements in section 18-1.01D. The results must be from a test conducted within 6 months before the date of the certificate of compliance.
2. Test results from a test conducted within 2 years before the date of the certificate of compliance verifying compliance with the following environmental requirements:
   2.1. Maximum constituent concentration levels
   2.2. US EPA regulatory requirements for:
      2.2.1. Volatile organic compounds
      2.2.2. Semivolatile organic compounds
      2.2.3. Toxicity characteristic leaching
      2.2.3. Modified synthetic leaching procedure
   2.3. Aquatic toxicity

18-1.01D Quality Control and Assurance

Dust palliatives must comply with US EPA requirements and RWQCB requirements for soil stabilizers.

Dust suppressants must be tested by an EPA-accredited laboratory. Liquid chemical treatments must be tested before dilution. Solid products must be mixed with water to a 25 percent concentration before testing. The chemical constituent concentration for each dust suppressant must not exceed the maximum levels shown in the following table:

Maximum Constituent Concentration Levels

Constituent	Test method	Requirement maximum level (ppm)
Arsenic	EPA Method 200.7	5.0
Barium		100.0
Cadmium		0.2
Chromium		1.0
Copper		1.0
Lead		1.0
Mercury	EPA Method 245.1	0.05
Selenium	EPA Method 200.7	5.0
Zinc		10.0
Phosphorus	EPA Method 365.4	2500.0
Cyanide	EPA Method 335.4	0.2

Dust suppressants must comply with the US EPA requirements for the quality characteristics when tested under the test methods shown in the following table:

Quality characteristic	Test method
Volatile organic compounds (VOC)	EPA Method 8260
Semivolatile organic compounds (SVOC)	EPA Method 8270
Toxicity characteristic leaching procedure	EPA Method 1311
Modified synthetic leaching procedure	EPA Method 1312

The aquatic toxicity for dust suppressant must comply with the requirements shown in the following table:

Aquatic Toxicity Requirements

Quality characteristic	Test method	Requirement
Aquatic toxicity[a] (LC50 min, ppm)	ASTM E729 or EPA Method 600/4-90/027F and EPA Method 600/4-91/002	10
Aquatic toxicity[a] (rating)	ASTM E729 or EPA Method 600/4-90/027F and EPA Method 600/4-91/002	slightly toxic or better
Renewal toxicity[b] (LC50 min, ppm)	ASTM E1295	10
Renewal toxicity[b] (rating)	ASTM E1295	slightly toxic or better

[a]Using *Ceriodaphnia dubia* (water flea), *Oncorhynchus mykiss* (rainbow trout), *Pimephales promelas* (fathead minnow), and *Americamysis bahia* (mysid shrimp)
[b]Using *Ceriodaphnia dubia* (water flea)

18-1.02 MATERIALS

18-1.02A General

Dust suppressants and control binders must be either (1) miscible in water or (2) a material that is directly applied to the surface without mixing with water.

18-1.02B Dust Suppressants

18-1.02B(1) General

Dust suppressants must be one of the following:

1. Petroleum-based organic product
2. Nonpetroleum-based organic product
3. Hygroscopic product
4. Synthetic polymer emulsions

18-1.02B(2) Petroleum-Based Organic Products

Petroleum-based organic dust suppressants must be asphalt emulsion, petroleum resin, base oil, mineral oil, or synthetic fluid.

Asphalt emulsion must be Grade SS1h.

Petroleum resin must comply with the requirements shown in the following table:

Petroleum Resin Requirements

Quality characteristic	Test method	Requirement
Residue (min, %)	ASTM D6934	60
pH	ASTM D1429	4.0–7.0
Specific gravity at 16 °C (min)	ASTM D1298	1.00
Kinematic viscosity at 25 °C (min, Saybolt Furol seconds [a])	ASTM D2170	188
Flash point (min °C)	ASTM D92	205
Particle charge test	ASTM D7402	Positive

[a] Use ASTM D2161 to convert the mm^2/s value to Saybolt Furol seconds

Base and mineral oils must comply with the requirements shown in the following table:

Base and Mineral Oils Requirements

Quality characteristic	Test method	Requirement
Base and mineral oil content (min, %)	-	75
Specific gravity at 16 °C (min)	ASTM D1298	0.85–0.90
Brookfield absolute viscosity at 68 °C (max, cP)	ASTM D2196	250
Flash point (min, °C)	ASTM D93	150

Synthetic fluids must comply with 40 CFR 35 and the requirements shown in the following table:

Synthetic Fluids Requirements

Quality characteristic	Test method	Requirement
Base and mineral oil content (min, %)	--	75
Specific gravity at 16 °C (min)	ASTM D1298	0.85–0.90
Brookfield absolute viscosity at 68 °C (max, cP)	ASTM D2196	250
Flash point (min, °C)	ASTM D93	150

18-1.02B(3) Nonpetroleum-Based Organic Products

Nonpetroleum-based organic dust suppressants must be lignosulfonate, plant oil, or tall oil pitch rosin.

Lignosulfonate must comply with the requirements shown in the following table:

Lignosulfonate Requirements

Quality characteristic	Test method	Requirement
Lignin sulfonate content ready to use (min, %)	ASTM D4900	25
Residue total solids content (min %)	ASTM D4903 or D2834	52
Lignin sulfonate content of residue (min, %)	--	50
Reducing sugars content of residue (min, %)	ASTM D5896 or D6406	25
pH	ASTM D1293	6.0–9.0
Specific gravity (min)	ASTM D1429	1.20
Brookfield absolute viscosity at 25° C (max, cP)	ASTM D2196	1,000

Plant oil must comply with the requirements shown in the following table:

Plant Oil Requirements

Quality characteristic	Test method	Requirement
Residue active solids content (min, %)	ASTM D4903	50
Specific gravity (min)	ASTM D1429	0.93
Brookfield viscosity (cP)	ASTM D2196	48

Tall oil pitch rosin must comply with the requirements shown in the following table:

Tall Oil Pitch Rosin Requirements

Quality characteristic	Test method	Requirement
Rosin acid content (min, %)	ASTM D1240	10
Residue active solids content (min, %)	ASTM D2834	45
pH	ASTM D1293	3.0–9.0
Specific gravity (min)	ASTM D1429	1.00
Brookfield absolute viscosity at 25 °C (cP)	ASTM D2196	50–200

18-1.02B(4) Hygroscopic Products

Hygroscopic dust suppressants must be calcium chloride, calcium chloride flake, or magnesium chloride.

Calcium chloride must comply with the requirements shown in the following table:

Calcium Chloride[a] Requirements

Quality characteristic	Test method	Requirement
Calcium chloride content (%)	ASTM E449	28–42
Total magnesium as $MgCl_2$ (max, %)	ASTM E449	6.0
Total alkali chlorides as NaCl (max, %)	ASTM E449	6.0
Calcium hydroxide content (max, %)	ASTM E449	0.2
pH with 5 percent solution	ASTM D1293	7.0–9.0
Specific gravity	ASTM D1429	1.28–1.44

[a]ASTM D98 or AASHTO M144

Calcium chloride flake must comply with the requirements shown in the following table:

Calcium Chloride Flake[a] Requirements

Quality characteristic	Test method	Requirement
Calcium chloride content (%)	ASTM E449	28–42
Total magnesium as $MgCl_2$ (max, %)	ASTM E449	6.0
Total alkali chlorides as NaCl (max, %)	ASTM E449	6.0
Calcium hydroxide content (max, %)	ASTM E449	0.2
pH with 5 percent solution	ASTM D1293	7.0–9.0
Gradation percent passing	ASTM C136	
3/8–inch sieve		100
#4 sieve		80–100
#30 sieve		0–5

[a]ASTM D98 or AASHTO M144

Magnesium chloride must comply with the requirements shown in the following table:

Magnesium Chloride Requirements

Quality characteristic	Test method	Requirement
Magnesium chloride content (%)	ASTM D4691 or ASTM D511[a]	28–33
Sulfate content as magnesium sulfate (max, %)	ASTM D4691[a]	4.0
Potassium content as potassium chloride (max, %)	ASTM E449	0.5
Sodium chloride content (max, %)	ASTM E449	1.0
pH with 5% solution	ASTM D1293	7.0–9.0
Specific gravity	ASTM D1429	1.31 ± 0.02

[a]You may use another appropriate atomic absorption spectrophotometry method such as that in *Standard Methods for the Examination of Water and Waste Water* by APHA-AWWA-WPCF.

18-1.02B(5) Synthetic Polymer Emulsions

Synthetic polymer emulsions must comply with the requirements shown in the following table:

Synthetic Polymer Emulsion Requirements

Quality characteristic	Test method	Requirement
Residue active solids content (min, %)	ASTM D2834	40
pH	ASTM D1429	4.0–9.5
Specific gravity at 16 °C	ASTM D1298	1.00–1.15
Brookfield absolute viscosity (max, cP)	ASTM D2196	1,000
Polymer film tensile strength – dry (psi)	ASTM D412	500
Retained coagulum on #100 sieve (max, %)	ASTM D1417	0.1
Ash content (max, %)	ASTM D5040	2

18-1.02C Dust Control Binders

Dust control binders must comply with the specifications for a general purpose tackifier in section 21-1.02F(1).

Fibers must comply with section 21-1.02E.

18-1.03 CONSTRUCTION

18-1.03A General

Monitor dust conditions and apply dust palliative for dust control as described and as ordered. Reapply dust palliative at any time to control dust.

Apply a dust suppressant to:

1. Temporary haul roads
2. Construction staging, material storage, and layout areas
3. Compacted soil or aggregate base roads or driveways
4. Paved surfaces

Apply a dust control binder to:

1. Rough–graded soils
2. Completed slopes
3. Soil stockpiles unless another practice is already used

Do not use a dust suppressant or dust control binder within 100 feet of a wetland or body of water.

18-1.03B Equipment

Apply dust suppressants that are miscible in water with either (1) a pressure-type water distributor truck equipped with a spray system or (2) a pressure-type asphalt distributor truck as specified in section 93-1.03C.

Apply dust suppressant flakes to the surface using a spreader or spinner disk.

Apply dust control binders with either (1) a pressure-type water distributor truck equipped with a spray system or (2) hydraulic spray equipment as specified for applying hydromulch in section 21-1.03E.

18-1.03C Mixing and Application Rates

Use the mix proportions and application rate for the corresponding dust suppressant as shown in the following table:

Dust suppressant	Mix proportions	Application rate
Asphaltic emulsion, Grade SS1H	5 parts water to 1 part emulsion	0.20–1.0 gal/sq yd
Petroleum resin emulsion	5 parts water to 1 part emulsion	0.20–1.0 gal/sq yd
Base and mineral oil	Apply undiluted	0.30–0.35 gal/sy yd
Lignosulfonate	1 part water to 1 part concentrate	1.0 gal/sq yd
Plant oil	Apply undiluted	0.25–0.50 gal/sq yd
Tall oil pitch rosin	5 parts water to 1 part emulsion for clayey soil and 10 parts water to 1 part emulsion for sandy soil.	0.30–1.0 gal/sq yd
Calcium chloride solution (Hygroscopic)	Apply undiluted	0.20–0.35 gal/sq yd
Calcium chloride flakes (Hygroscopic)	--	1.0–1.5 lb/sq yd
Magnesium chloride (Hygroscopic)	Apply undiluted	0.30–0.50 gal/sq yd
Synthetic polymer emulsion	9 parts water to 1 part concentrate	0.50 gal/sq yd

Apply hygroscopic materials under the manufacturer's instructions.

Apply calcium chloride flakes to a moist surface.

Allow surfaces treated with a dust suppressant to cure before opening to traffic.

Use the mix proportions and application rate for the corresponding dust control binder as shown in the following table:

Dust control binder	Mix proportions	Application rate
Guar	11 to 15 pounds per 1,000 gallons of water	44–59 lb/acre
Psyllium	Enough water to allow for uniform slurry flow	80–200 lb/acre
Starch	Manufacturer's recommended mix proportions with water	150 lb/acre
Liquid acrylic copolymers and polymers[a]	10 parts water to 1 part polymer	1,175 gal/acre
Liquid methacrylate and acrylate polymers	Manufacturer's recommended mix proportions with water	20 gal/acre
Copolymers of sodium acrylates and acrylamides	Manufacturer's recommended mix proportions with water	3–10 lb/acre
Polyacrylamide and copolymer of acrylamide	10 pounds per 1,000 gallons of water	5 lb/acre
Hydro-colloid polymers	Manufacturer's recommended mix proportions with water	54–64 lb/acre

[a]Mix and handle the polymeric compound in a manner that will not cause foaming. You may add an antifoaming agent.

Do not allow stormwater runoff from polyacrylamide treated soils unless water passes through:

1. Sediment basin if the total drainage area is greater than or equal to 5 acres.

2. Sediment trap or a series of check dams if the total drainage area is less than 5 acres. Maximize the number of check dams used and space them evenly in the drainage channel so as to maximize sediment settlement.

You may add fibers to dust control binders at a rate of 2,000 lb/acre.

You may use reduced application rates when reapplying dust palliatives if authorized.

18-1.04 PAYMENT

Not Used

^^

19 EARTHWORK

07-19-13

Replace "20-3.03B(4)" in the 2nd paragraph of section 19-1.01A with:

07-19-13

20-2.02C(2)

Replace the 3rd paragraph in section 19-2.01A with:

07-19-13

Pavement removal within the limits of roadway excavation must comply with section 15-2.02B.

07-19-13

Delete the 2nd paragraph in section 19-2.03A.

Replace the 2nd paragraph of section 19-3.01A(2)(b) with:

07-01-11

For cofferdams on or affecting railroad property, allow 85 days for review.

Add to the list in the 1st paragraph of section 19-3.01A(2)(d):

01-20-12

9. Provisions for discontinuous rows of soil nails

Replace "sets" in the 3rd and 4th paragraphs of section 19-3.01A(2)(d) with:

04-19-13

copies

Add to section 19-3.01A(3)(b):

01-20-12

For soil nail walls, wall zones are specified in the special provisions.

For ground anchor walls, a wall zone is the entire wall unless otherwise specified in the special provisions.

01-20-12

Delete the 2nd sentence in the 4th paragraph of section 19-3.01A(3)(b).

Replace "90" in the paragraph of section 19-3.02G with:

01-18-13

90-1

Add to section 19-3.02:

07-19-13

19-3.02I Filter Fabric

Filter fabric must be Class A.

Replace the heading of section 19-3.03C with:

04-19-13

19-3.03B(4) Cofferdams

Replace the heading of section 19-3.03D with:

04-19-13

19-3.03B(5) Water Control and Foundation Treatment

Replace the 1st paragraph of section 19-3.03E(3) with:

01-20-12

Compact structure backfill behind lagging of soldier pile walls by hand tamping, mechanical compaction, or other authorized means.

Add to the end of section 19-3.03E(3):

07-19-13

If filter fabric is shown behind the lagging:

1. Immediately before placing the filter fabric, remove any loose or extraneous material and sharp objects from the surface to receive the filter fabric.
2. Handle and place the filter fabric under the manufacturer's instructions. Stretch, align, and place the fabric without wrinkling.
3. Stitch the adjacent borders of filter fabric or overlap the adjacent borders by 12 to 18 inches. If stitching the border, use yarn of a contrasting color. Yarn size and composition must be as recommended by the fabric manufacturer. Use 5 to 7 stitches per inch of seam.
4. Repair any damaged filter fabric by placing a piece of filter fabric large enough to cover the damaged area and comply with the overlapping or stitching requirements.

Replace the 2nd paragraph of section 19-3.03F with:

01-20-12

Do not backfill over or place material over slurry cement backfill until 4 hours after placement. When concrete sand is used as aggregate and the in-place material is free draining, you may start backfilling as soon as the surface water is gone.

Add between the 2nd and 3rd paragraphs of section 19-3.03K:

01-20-12

Before you excavate for the installation of ground anchors in a wall zone:

1. Complete stability testing
2. Obtain authorization of test data

Replace the 2nd sentence of the 7th paragraph of section 19-3.03K:

01-20-12

Stop construction in unstable areas until remedial measures have been taken. Remedial measures must be submitted and authorized.

Add between the 8th and 9th paragraphs of section 19-3.03K:

01-20-12

When your excavation and installation methods result in a discontinuous wall along any soil nail row, the ends of the structurally completed wall section must extend beyond the ends of the next lower excavation lift by a distance equal to twice the lift height. Maintain temporary slopes at the ends of each wall section to ensure slope stability.

Replace the 9th paragraph of section 19-3.03K:

01-20-12

Do not excavate to the next underlying excavation lift until the following conditions have been attained for the portion of the soil nail or ground anchor wall in the current excavation lift:

1. Soil nails or ground anchors are installed and grouted.
2. Reinforced shotcrete facing is constructed.

01-18-13

3. Grout and shotcrete have cured for at least 72 hours.

01-20-12

4. Specified tests are complete for that portion of wall and the results are authorized.
5. Soil nail facing anchorages are attached or ground anchors are locked off.

Replace the 2nd sentence in the 7th paragraph of section 19-3.04 with:

01-18-13

Structure excavation more than 0.5 foot from the depth shown is paid for as a work-character change if you request an adjustment or the Engineer orders an adjustment.

Replace "Contract completion time" in the 8th paragraph of section 19-6.03D with:

10-19-12

work completion date

Add to section 19:

01-18-13

19-10–19-20 RESERVED

^^

20 LANDSCAPE

05-30-14

Replace the headings and paragraphs in section 20 with:

07-19-13

20-1 GENERAL

20-1.01 GENERAL

20-1.01A Summary

Section 20-1 includes general specifications for performing landscaping.

If an irrigation system is to be installed in an existing planting area to be maintained, check for plant deficiencies under section 20-3.02A(4) before starting irrigation work.

Perform a functional test for each irrigation system under 20-2.01A(4)(d):

1. Before planting the plants
2. After planting the plants
3. Before the start of the plant establishment work

If a plant is to be transplanted or an irrigation component is to be relocated, transplant plant or protect irrigation components before performing other construction activities in the area.

Perform roadside clearing:

1. As required to prepare the job site for construction work
2. Until the start of the plant establishment work or Contract acceptance, whichever comes first

20-1.01B Definitions

Reserved

20-1.01C Submittals

At least 15 days before applying any pesticide, submit a copy of the licensed pest control adviser's recommendation.

At the end of each week, submit a report documenting the application of all pesticides as an informational submittal. Use form *Report of Chemical Spray Operations*.

Before mixing a pesticide, submit a copy of the registered label for the pesticide as an informational submittal. If unable to copy, allow the Engineer to read the label on the container.

20-1.01D Quality Control and Assurance

20-1.01D(1) General

Obtain a recommendation from a licensed pest control adviser for the use of all pesticides under the Food & Agri Code. The recommendation must include the pesticides to be used, rates of application, methods of application, and application areas.

The pesticide applicator must have an active and valid qualified applicator license or certificate from the Department of Pesticide Regulation.

20-1.01D(2) Progress Inspections

The Engineer will perform progress inspections before:

1. Cultivating work starts
2. Pressure testing of irrigation pipe on the supply side of control valves
3. Testing of low voltage conductors
4. Planting work starts
5. Completion of planting work

Notify the Engineer at least 4 business days before each inspection is required. Allow at least 3 business days for the Engineer's inspection.

Unless otherwise authorized, do not proceed with the next construction activity until the inspection has been completed and any required corrective work has been performed and authorized.

20-1.02 MATERIALS

20-1.02A General

Reserved

20-1.02B Water

Water available from an existing Department-owned facility within the project limits or an irrigation system to be installed under the Contract is furnished at no charge.

If water is not available, make arrangements for supplying water. Water must be of a quality that will promote plant growth.

20-1.02C Pesticides

Pesticides must comply with the Department of Pesticide Regulation.

Insecticide must be imidacloprid.

Rodenticides must be brodifacoum, bromadiolone, or diphacinone.

Do not use oil or pelleted forms of pesticides for weed control.

For weed control, use a pesticide with a photosensitive dye that produces a contrasting color when sprayed on the ground. The color must disappear between 2 to 3 days after being applied. The dye must not stain surfaces or injure plants or wildlife when applied at the manufacturer's recommended application rate.

20-1.03 CONSTRUCTION

20-1.03A General

Take precautions to prevent irrigation water from:

1. Wetting vehicles, pedestrians, and pavement
2. Eroding soil

05-30-14

3. Causing excess runoff

Water plants under the Model Water Efficient Landscape Ordinance, 23 CA Code of Regs § 490 et seq., and local water agency requirements.

Water plants at night unless otherwise authorized.

07-19-13

Dispose of removed, pruned, and damaged vegetative material.

You may reduce removed vegetative material to chips with a maximum thickness of 1/2 inch and spread within the job site at locations determined by the Engineer. Chipped material must not be substituted for wood mulch, nor must the chipped material be placed within areas to receive wood mulch.

20-1.03B Pesticides

Notify the Engineer of pesticide application times at least 24 hours before each application.

Mix and apply pesticides under the requirements of the Department of Pesticide Regulation and the instructions on the pesticide product label.

Do not apply pesticides:

1. On Saturdays and holidays unless authorized
2. Whenever weather and wind conditions are unsuitable for application
3. Within the plant basin
4. On the foliage and woody parts of the plant

If a granular preemergent is used, it must be covered with mulch on the same work day. Do not apply granular preemergent in plant basins.

Do not apply preemergents:

1. To groundcover plants before the plants have been planted a minimum of 3 days and have been thoroughly watered
2. Within 18 inches of trees, shrubs, and seeded areas

20-1.03C Roadside Clearing

20-1.03C(1) General

Perform roadside clearing by:

1. Removing and disposing of trash and debris
2. Controlling the following pests:
    2.1. Rodents
    2.2. Insects
    2.3. Weeds
3. Removing existing plants as described

Control rodents by using rodenticides or traps.

20-1.03C(2) Remove Existing Plants

Remove existing plants as described. Removal of existing plants includes removing their stumps and roots 2 inches or larger in diameter to a minimum depth of 12 inches below finished grade. Backfill holes resulting from stump removal to finished grade with material obtained from adjacent areas.

If a plant is to be planted within existing groundcover area, remove existing groundcover from within an area 6 feet in diameter centered at each plant location.

20-1.03C(3) Weed Control

Control weeds by the use of pesticides, hand pulling, or mowing.

If pesticides are used to control weeds, apply pesticides before the weeds reach the seed stage of growth or exceed 4 inches in length, whichever occurs first. Do not use pesticides at cutting plant locations.

Where cuttings are to be planted, control weeds by hand pulling within an area 2 feet in diameter centered at each plant location.

If weeds are to be controlled by hand pulling, hand pull weeds before they reach the seed stage of growth or exceed 4 inches in length, whichever occurs first.

Where liner, plug, or seedling plants are to be planted 10 feet or more apart, control weeds by the use of pesticides or hand pulling within an area 2 feet in diameter centered at each plant location. Where liner, plug, or seedling plants are to be planted less than 10 feet apart, control weeds by the use of pesticides within the entire area.

Control weeds by mowing outside of mulched areas, plant basins, groundcover areas, and within areas to be seeded. Mowing must extend to the edges of pavement, dikes, curbs, sidewalks, walls, and fences.

If mowing is to be performed within areas to be seeded, perform mowing as needed until the start of the seeding operation specified in section 21.

Mowing must be performed before the weeds reach the seed stage of growth or exceed 6 inches in length, whichever occurs first. Mow weeds to a height of 3 inches.

20-1.03C(4) Disposal of Removed Groundcover, Weeds, and Mowed Material

Dispose of hand pulled weeds the same day they are pulled. Dispose of removed groundcover within 3 days.

Dispose of mowed material from the initial mowing. Disposal of material from subsequent mowing is not required.

20-1.03D Cultivation

Cultivation must be by mechanical methods and performed until the soil is in a loose condition to a minimum depth of 6 inches. Soil clods must not be larger than 2 inches in maximum dimension after cultivation.

The areas to be cultivated must extend 12 inches beyond the outer limit of each planting area requiring cultivation.

After initial cultivation, place soil amendment and fertilizer at specified rates.

Recultivate to thoroughly mix native soil and amendments.

Do not drive on cultivated areas after cultivation.

Planting areas that have been cultivated and become compacted must be recultivated.

Rocks and debris encountered during soil preparation in planting areas must be brought to the surface of the ground.

Remove rocks and debris as ordered. This work is change order work.

20-1.03E Weed Germination

Reserved

20-1.04 PAYMENT

Items paid for by area are measured parallel to the ground surface.

Planting areas that do not require cultivation but are within the cultivation areas will not be deducted.

20-2 IRRIGATION

20-2.01 GENERAL

20-2.01A General

20-2.01A(1) Summary

Section 20-2 includes specifications for installing irrigation systems.

The irrigation systems shown are diagrammatic.

20-2.01A(2) Definitions

Reserved

20-2.01A(3) Submittals

20-2.01A(3)(a) General

Submit shop drawings for the electrical components of the irrigation system except electrical service 30 days before installation. The drawings must:

1. Include schematic wiring diagrams showing wire sizes and routes between electrical components
2. Show conduit sizes
3. Bear the written approval of the controller manufacturer or the manufacturer's authorized agent
4. Be accompanied by:
   - 4.1. Colored wire and splice samples
   - 4.2. Manufacturer's descriptive and technical literature

After the work shown on the drawing is complete, submit 3 copies of the as-built shop drawings including any wire modifications for each controller installed.

For each controller, laminate and place in an envelope 1 copy of:

1. As-built schematic wiring diagram including wiring modifications
2. 11 by 17 inches as-built irrigation plan

The laminate must be clear, mat-finished plastic that is at least 10 mils thick. The envelope must be heavy-duty plastic.

Attach the envelope to the inside of the controller enclosure or cabinet door. If the door is not large enough to secure the envelope, submit the envelope and its contents.

20-2.01A(3)(b) Manufacturer's Instructions

Submit as an informational submittal the manufacturer's installation instructions 15 days before installing:

1. Couplings for conduits used for irrigation conduits
2. Plastic pipe and fittings
3. Solvent cement for plastic pipe and flexible hose
4. Sprinklers
5. Flow sensors

20-2.01A(3)(c) Maintenance and Operation Manuals

Before Contract acceptance, submit as an informational submittal a manufacturer's maintenance and operation manual for each type of controller installed.

20-2.01A(4) Quality Control and Assurance

20-2.01A(4)(a) General

Reserved

20-2.01A(4)(b) Pressure Testing

20-2.01A(4)(b)(i) General

Perform pressure testing for leakage on irrigation supply lines:

1. In the Engineer's presence
2. On business days between 8 a.m. and 5 p.m. unless authorized
3. Before backfilling supply line trenches
4. With irrigation system gate valves open
5. With open ends of the supply line and fittings plugged or capped

Notify the Engineer at least 48 hours before performing a pressure test.

Choose either Method A or B to test supply lines installed by trenching and backfilling and supply lines that are completely visible after installation.

All other supply lines, including those installed in the ground by methods other than trenching and backfilling must be tested by Method A.

Test irrigation supply line in conduit by Method A with the testing period modified to 0.5 hour and no allowable pressure drop.

20-2.01A(4)(b)(ii) Method A

Method A pressure testing procedures for leakage must comply with the following:

1. Pressure gauge must be calibrated from 0 to 200 psi in 5 psi increments and be accurate to within a tolerance of 2 psi.
2. Supply line must be filled with water and connected to a pressure gauge. Place the pipeline under a pressure of 125 psi. Remove the source of pressure and leave the line under the required pressure.
3. Test the supply line under the required pressure for a period of 1 hour. The pressure gauge must remain in place until each test period is complete.
4. Leaks that develop in the tested portion of the system must be located and repaired after each test period if a drop of more than 5 psi is indicated by the pressure gauge. After the leaks have been repaired, repeat the 1 hour pressure test until the drop in pressure is 5 psi or less.

If a system consists of a new supply line connected to an existing line, the new supply line must be isolated from the existing line and tested.

20-2.01A(4)(b)(iii) Method B

Method B pressure testing procedures for leakage must comply with the following:

1. Before any portion of the supply line on the upstream side of a control valve is backfilled, water must be turned on for that portion of the line and maintained at full pressure from the water source for a period not less than 8 consecutive hours after all air has been expelled from the line. Before any portion of the supply line on the downstream side of the control valve is backfilled, perform the same test for a period not less than 1 hour.
2. Repair leaks that develop in the tested portion of the system. After the leaks have been repaired, repeat the pressure test until no leaks occur as determined by the Engineer.

20-2.01A(4)(c) Sprinkler Coverage Check

After installation of the sprinklers, check and adjust the entire sprinkler system for proper orientation and uniform coverage.

20-2.01A(4)(d) Irrigation System Functional Tests

The functional tests for each irrigation controller or group of controllers and associated irrigation system served by a single electric service point must consist of at least 1 complete cycle of operation. The Engineer determines the length of the cycle.

Notify the Engineer at least 10 days before performing each functional test.

20-2.01A(4)(e) Final Irrigation System Check

Perform the final check of the existing and new irrigation system between 20 and 30 days before Contract acceptance. The Engineer determines the length of the cycle.

Remote control valves connected to existing and new irrigation controllers must be checked for automatic operation when the controllers are in automatic mode.

20-2.01B Materials

20-2.01B(1) General

Use minor concrete for replacing removed concrete facilities.

HMA for replacing removed asphalt concrete surfacing and facilities must comply with section 39. You may use minor HMA if authorized.

20-2.01B(2) Garden Valves

Each garden valve must:

1. Be inverted nose type and of brass or bronze construction with female thread inlet
2. Have a replaceable seat washer, rising valve stem within a protective collar, and male thread hose outlet
3. Have a loose key handle

20-2.01B(3) Recycled Water Identification

Irrigation components used for recycled water must be manufactured or painted purple. Recycled water irrigation pipe and tubing must have a permanent label with the wording "CAUTION RECYCLED WATER" every 24 inches in 2 rows spaced approximately 180 degrees apart in the longitudinal direction of the pipe or tubing.

The recycled water warning sign must be a decal or a decal attached to a 1/16-inch thick aluminum plate or tag.

Each warning sign decal must:

1. Show the phrase "Recycled Water, Do Not Drink" and the drinking glass graphic symbol
2. Be UV fade and weather resistant and manufactured from flexible vinyl with or without mylar
3. Have a purple background, black text, and self-adhesive backing

Each warning tag must:

1. Show the phrase "RECYCLED WATER" and the drinking glass graphic symbol
2. Be UV fade and weather resistant
3. Be purple, double-sided, and manufactured from polyurethane
4. Have an integral neck attachment and attachment hole capable of withstanding 178 lb of pull-out resistance
5. Have hot-stamped black lettering

Posts and hardware for warning signs must comply with section 56-4.

Concrete sprinkler protectors used with recycled water must be painted purple.

20-2.01B(4) Location Markers

Location markers must be schedule 40 white PVC plastic pipe.

20-2.01B(5) Pull Boxes

Pull boxes must comply with section 86-2.06 and be no. 5 or larger unless otherwise shown. Pull boxes for low voltage conductors must not have side openings.

Pull box covers used solely for irrigation electrical service must be marked "IRRIGATION".

20-2.01B(6) Unions

Unions must be brass or malleable iron capable of withstanding the maximum required working pressure.

20-2.01B(7) Valve Boxes and Covers

Valve boxes must be precast concrete.

Covers must be:

1. Concrete, steel, or cast iron.
2. Marked "WATER" in cast-in letters not less than 1 inch high.
3. 1 piece, except 2 pieces are required when the weight of the valve box cover exceeds 35 lb.

The valve box covers must include a polyurethane label with the appropriate controller letter and station number as shown.

20-2.01B(8) Wye Strainers

Wye strainers must:

1. Have a cast iron or all bronze body
2. Have a removable stainless steel strainer screen:
   - 2.1. With an open area equal to at least 3 times the cross-sectional area of the pipe based on an iron pipe size
   - 2.2. With 40-mesh woven wire, except:
     - 2.2.1. For a backflow preventer assembly, the screen must be 20-mesh woven wire mesh or perforated sheet with 0.045-inch diameter holes
     - 2.2.2. For a valve assembly, the screen must be 80-mesh woven wire mesh
3. Be capable of withstanding a working pressure of 150 psi
4. Be equipped with a garden valve at the outlet

The wye strainer filter housing must:

1. Withstand a working pressure of 150 psi
2. Be manufactured of reinforced polypropylene plastic

20-2.01C Construction

20-2.01C(1) General

05-30-14

Immediately shut off water to broken supply lines, valves, or sprinkler assemblies. Repair irrigation systems within 24 hours after a malfunction or damage occurs.

07-19-13

Connect underground metallic pipes, valves, or fittings made of dissimilar metals through a dielectric coupling or bushing.

You may install conduits, conductors, and supply lines by methods other than trenching provided that they are not damaged and are installed at the depths specified.

20-2.01C(2) Trenching and Backfilling

Trench and backfill under section 86-2.01.

Remove plants under 20-1.03C as necessary to perform trenching. If plants are to remain, adjust trench alignment to minimize damage.

If removal of:

1. Turf is required, remove to a maximum width of 12 inches.

2. Groundcover is required, remove to a maximum width of 6 feet. Existing *Carpobrotus* and *Delosperma* may be rototilled if the backfill for the trenches does not contain plants longer than 6 inches in length.

Make a 2-inch deep sawcut along neat lines around the perimeter of the pavement to be removed at locations determined by the Engineer.

The trench must have uniform bearing throughout the entire length and must be free of jagged rubble or sharp objects. Ensure conduit, supply line, and joints are not moved or damaged by backfill operations.

For a project with multiple water service points, excavate and backfill trenches for 1 service point at a time.

11-15-13

Trenches for irrigation supply lines and conduits 3 inches and larger must be 5 times the pipe or conduit diameter deep and 2 times the pipe or conduit diameter wide.

Trenches for irrigation supply lines and conduits 2-1/2 inches or less in diameter must be a minimum of 12 inches below finished grade, measured from the top of the installed pipe.

07-19-13

Trenches must be at least 4 feet from curbs, dikes, and paved shoulders.

Rocks and debris encountered during trenching operations must be brought to the surface of the ground. Remove rocks and debris as ordered. This work is change order work.

If trenching requires the removal of plants, in areas with:

1. Turf, replace turf with sod under section 20-3.03C(3)(e).
2. Groundcover, replace groundcover plants from flats and plant at 12 inches on center under section 20-3.03C. No replacement of *Carpobrotus* and *Delosperma* is required if removed by rototilling.

11-15-13

Where existing surfacing is removed, replace the structural section to match the materials removed. Replacement concrete must be of uniform smoothness, color, and texture equal to the adjacent concrete surface. Dispose of removed material. Install supply line and conduits at the bottom of trenches and backfill with sand to a depth of 2 inches over the top of the supply lines and conduits. Excluding the part of the trench backfilled with surfacing or pavement, the remainder of the trench must be backfilled with material that is excavated from the trench. Rock, broken concrete, asphalt concrete and other particles larger than 2 inches in greatest dimension must not be used.

07-19-13

20-2.01C(3) Pull Boxes

Install pull boxes under section 86-2.06 at the following locations:

1. At all conductor splices except splices made in valve boxes
2. Within 5 feet of irrigation controllers
3. At ends of electrical conduits
4. At other locations shown

20-2.01C(4) Valve Boxes and Covers

Install and identify each valve box as shown.

In walkways and paved areas, install the top of the valve box flush with the surrounding finished grade.

20-2.01C(5) Recycled Water Warning Signs

Install recycled water warning signs on irrigation facilities using recycled water.

Install sign decals directly to clean, smooth surfaces. Clean the surface with alcohol or an equivalent cleaner before applying the decal.

Install a 4 by 4 inch warning sign decal to each:

1. Backflow preventer assembly

2. Irrigation controller enclosure cabinet door

Install a 2 by 2 inch warning tag to the each remote control valve and valve box cover.

Install a 2-1/2 by 3 inches sign decal to each sprinkler riser.

Under local regulations, install a 12 by 12 inch warning sign decal on an aluminum plate and attach to gates, fences, and walls located in the vicinity of a recycled water irrigation system. On gates and fences, install signs with S hooks and C clips or 14-gauge galvanized steel wire. On concrete walls or other rough surfaces, install signs with a silicon-based adhesive.

20-2.01C(6) Garden Valves

Furnish 3 keys for each garden valve before Contract acceptance.

20-2.01D Payment

Not Used

20-2.02 EXISTING IRRIGATION FACILITIES

20-2.02A General

20-2.02A(1) Summary

Section 20-2.02 includes specifications for checking, testing, operating, replacing, and relocating existing irrigation facilities.

20-2.02A(2) Definitions

Reserved

20-2.02A(3) Submittals

Submit a list of irrigation system deficiencies within 7 days after checking the existing facilities.

20-2.02A(4) Quality Control and Assurance

After irrigation facilities have been relocated, demonstrate in the presence of the Engineer that the relocated facilities function properly.

Certify each existing backflow preventer under section 20-2.03A(4).

20-2.02B Materials

Valve box covers must be the same size as the covers they replace.

Control and neutral conductors must be the same size and color as the control and neutral conductors they replace.

20-2.02C Construction

20-2.02C(1) General

Notify the Engineer at least 4 business days before shutting off the water supply to any portion of the existing irrigation system and immediately after restoring the water supply to any portion of the existing irrigation system.

If an irrigation facility to be relocated is determined unsuitable by the Engineer, replace irrigation facility under section 20-2. This work is change order work.

20-2.02C(2) Check and Test Existing Irrigation Facilities

Before performing irrigation system work, check existing irrigation facilities to remain in place or to be relocated. The Engineer determines the test watering cycle lengths. Check for deficiencies including missing parts, damaged components, and improper operation. Correct deficiencies as ordered. The correction of deficiencies is change order work.

20-2.02C(3) Operate Existing Irrigation Facilities

If the Contract includes a bid item for operate existing irrigation facilities, after performing work under section 20-2.02C(2), operate existing irrigation facilities through Contract acceptance.

Operate existing irrigation facilities except for water meters, underground supply lines, control and neutral conductors, and electrical conduits.

Check for proper operation at least once every 30 days. Adjust, repair, or replace existing irrigation facilities within 7 days of finding any deficiency.

Operate irrigation systems using the automatic irrigation controller until Contract acceptance. You may operate irrigation controllers manually during plant replacement, fertilization, weed germination, and repair work.

Program the irrigation controllers for seasonal requirements.

20-2.02C(4) Replace Valve Box Covers

Existing valve box covers shown to be replaced must remain in place until the new covers are ready to be installed.

Dispose of removed valve box covers.

20-2.02C(5) Relocate Backflow Preventer Assemblies

Relocate backflow preventer assembly as shown and install under section 20-2.03C.

20-2.02C(6) Relocate Water Meters

Relocate water meter as shown.

20-2.02C(7) Relocate Irrigation Controllers

Relocate irrigation controller as shown and install under section 20-2.07C.

20-2.02D Payment

Not Used

20-2.03 BACKFLOW PREVENTER ASSEMBLIES

20-2.03A General

20-2.03A(1) Summary

Section 20-2.03 includes specifications for installing a backflow preventer assembly.

20-2.03A(2) Definitions

Reserved

20-2.03A(3) Submittals

Reserved

20-2.03A(4) Quality Control and Assurance

Each backflow preventer assembly must be certified by a backflow preventer tester. The tester must have an active and valid certification from the water purveyor having jurisdiction.

If the local water purveyor does not have a certification program, the tester must be certified by AWWA or a nearby county with a certification program.

Notify the Engineer at least 5 business days before certifying backflow preventer assembly.

Certify each backflow preventer assembly annually and within 10 days before Contract acceptance.

20-2.03B Materials

20-2.03B(1) General

Each backflow preventer assembly must include:

1. Backflow preventer including gate valve, wye strainer, brass or malleable iron unions, fittings, and supports
2. Blanket
3. Enclosure
4. Concrete pad

Concrete for the pad must be minor concrete, except the concrete must not contain less than 463 pounds of cementitious material per cubic yard. Hand mixing of the concrete is allowed.

20-2.03B(2) Backflow Preventers

Each backflow preventer must:

1. Be reduced-pressure principle type.
2. Comply with the requirements of the water purveyor that has jurisdiction.
3. Be factory-assembled with:
   - 3.1. 2 check valves
   - 3.2. 1 pressure differential relief valve
   - 3.3. 4 test cocks
   - 3.4. 2 shut-off valves manufactured from iron or bronze. Shut-off valves must be one of the following:
     - 3.4.1. Resilient wedge gate valves
     - 3.4.2. Resilient seated and fully ported ball valves
     - 3.4.3. Resilient seated butterfly valves

Backflow preventer components must be capable of withstanding a working pressure of 150 psi.

20-2.03B(3) Backflow Preventer Blankets

Each backflow preventer blanket must:

1. Be polyester fabric coated with vinyl or polymeric resin
2. Be resistant to UV light, water, mildew, and fire
3. Have an R-value from R-30 to R-38

Blankets must have a securing mechanism that includes either zippers, hook-pile tape, grommets, snaps, buttons, or any combination of these. Wherever the backflow preventer is not in an enclosure, the securing mechanism must be capable of accepting a padlock.

20-2.03B(4) Backflow Preventer Enclosures

Each backflow preventer enclosure must:

1. Have expanded metal sides, ends, and top panels fabricated from 9-gauge minimum thickness stainless sheet steel with openings of approximately 3/4 by 1-3/4 inches
2. Have expanded metal panels attached to the 3/16-inch thick steel frame by a series of welds not less than 1/4 inch in length and spaced not more than 4 inches on center, along the edges of the enclosure
3. Have Type 304 stainless steel lock guards with a minimum thickness of 12 gauge.
4. Have hexagonal nuts and lock-type washers
5. Be powder coated by the manufacturer to match color no. 20450 of FED-STD-595.
6. Have padlock clasp or latch and lock mechanism

20-2.03C Construction

Finish exposed top surfaces of concrete pad with a medium broom finish applied parallel to the long dimension of pads.

Install hold-downs for the backflow preventer assembly enclosure when concrete is still plastic.

20-2.03D Payment

Not Used

20-2.04 CAM COUPLER ASSEMBLIES

20-2.04A General

Section 20-2.04 includes specifications for installing a cam coupler assembly.

20-2.04B Materials

Each cam coupler assembly must consist of a cam coupler, dust cap, check valve, pipes, fittings, concrete thrust block, and valve box with woven wire cloth and gravel.

Cam couplers and keys must be manufactured of brass or bronze and be able to withstand a working pressure of 150 psi.

Furnish 3 loose cam coupler keys before Contract acceptance.

20-2.04C Construction

Install cam coupler assemblies in valve boxes as shown.

20-2.04D Payment

Not Used

20-2.05 CONTROL AND NEUTRAL CONDUCTORS

20-2.05A General

20-2.05A(1) Summary

Section 20-2.05 includes specifications for installing control and neutral conductors.

20-2.05A(2) Definitions

Reserved

20-2.05A(3) Submittals

Reserved

20-2.05A(4) Quality Control and Assurance

Perform field tests on control and neutral conductors. Field tests must comply with the specifications for lighting circuits in section 86-2.14B.

Where the conductors are installed by trenching and backfilling, perform field tests after a minimum of 6 inches of backfill material has been placed and compacted over the conductors.

20-2.05B Materials

Control and neutral conductors must comply with the requirements in section 86-2.08.

For connections between 24-volt irrigation controllers and valve solenoids, use control and neutral conductors. Conductors must include a control conductor for each valve and a common neutral.

Conductor insulation color, except for the stripes, must be continuous throughout. The color of the conductors must be consistent from the controller to each valve. Neutral conductors must be white. Do not use white for control conductors. Do not use conductors with green insulation except as permitted by the NEC.

Conductors must be:

1. No. 12 AWG or larger or no. 14 AWG or larger for armor-clad
2. Rated for 36 V or 600 V for armor-clad
3. Rated for direct burial
4. Underground feeder cable Type UF and TWU
5. Solid, uncoated copper for armor-clad
6. Not less than 90 percent of the AWG diameter required

No. 10 and smaller conductors must be insulated with a minimum of 56 mils of PVC or a minimum of 41 mils of polyethylene. No. 8 and larger conductors must be insulated with a minimum of 70 mils of PVC.

No. 10 and smaller armor-clad conductors must be insulated with a minimum of 41 mils of polyethylene. No. 8 and larger armor-clad conductors must be insulated with 54 to 60 mils of PVC.

Armor-clad conductors must include:

1. Stainless steel tape armor, Type 304 and helically wrapped with a 33 percent minimum overlap. The tape must be 0.5 inch wide and at least 0.005 inch thick.
2. PVC outer conductor jacket that is UV resistant and complies with the ICEA S-61-402, NEMA standard WC5 and UL listing 1263. The jacket nominal thickness must be 24 to 30 mils thick.

20-2.05C Construction

20-2.05C(1) General

Reserved

20-2.05C(2) In Open Trenches

Do not install control and neutral conductors above each other in an open trench. Wrap conductors together with electrical tape at 5 foot intervals.

Where conductors are installed in the same trench as supply line, install at the same depth as the line. At other locations, install conductors not less than 12 inches below finished grade.

Where conductors are not in a supply line trench, install conductors at least 4 feet from curbs, dikes, and paved shoulders.

20-2.05C(3) In Conduits

Install conductors in electrical conduit if conductors are to be:

1. Surface mounted
2. Installed in or on structures
3. Installed under paved areas
4. Installed in irrigation conduits
5. Placed in concrete

20-2.05C(4) Splicing

Splice low voltage control and neutral conductors under sections 86-2.09C, 86-2.09D, and 86-2.09E, except do not use method B. Tape used for splice insulation must be PVC tape.

Leave at least 2 feet of slack for each conductor at each:

1. Pull box
2. Valve box for each conductor that is connected to other facilities within the box or spliced within the box

Do not splice conductors in irrigation controller cabinets.

Permanent splice connections must be made with freshly cut and skinned conductors. Do not use temporary splices made for testing valve circuits as permanent splices.

20-2.05C(5) Marking

Mark control and neutral conductors in pull boxes, valve boxes, at irrigation control terminals, and at splices.

Mark conductor terminations and splices with adhesive cloth wrap-around markers. Seal markers with clear, heat-shrinkable sleeves.

Mark nonspliced conductors with clip-on C-shaped white extruded PVC sleeves. Sleeves must have black indented legends of uniform depth with transparent overlays over the legends and chevron cuts for the alignment of 2 or more sleeves.

Identify markers for the control conductors with the appropriate irrigation controller and station number.

20-2.05D Payment

Not Used

20-2.06 FLOW SENSORS

20-2.06A General

Section 20-2.06 includes specifications for installing a flow sensor.

20-2.06B Materials

Each flow sensor must be an inline type with a nonmagnetic spinning impeller as the only moving part.

The electronics housing must:

1. Be schedule 80 PVC or cast 85-5-5-5 bronze
2. Include glass-filled polyphenylene sulfide
3. Be easily removable from the meter body and include 2 ethylene-propylene O-rings

The impeller must be tungsten carbide.

The electronics must be rated to withstand prolonged water immersion conditions and include 2 single conductor 18 AWG leads, 48 inches long.

The insulation must be direct burial UF type colored red for the positive lead and black for the negative lead.

The flow sensor must be capable of withstanding:

1. 100 to 400 psi operating pressure depending on sensor size shown
2. Liquid temperatures up to 220 degrees F
3. Flows from 1/2 to 15 ft/sec

20-2.06C Construction

Install flow sensor as shown.

20-2.06D Payment

Not Used

20-2.07 IRRIGATION CONTROLLERS

20-2.07A General

20-2.07A(1) Summary

Section 20-2.07 includes specifications for installing irrigation controllers.

20-2.07A(2) Definitions

irrigation controller: "Smart" irrigation controller as defined by the Irrigation Association.

remote irrigation control system (RICS): Centralized water management system that consists of a base station, centralized server, satellite controllers.

base station: Designated computer located at a Department maintenance facility or District Office that collects data from a series of satellite controllers through a centralized server.

centralized server: Designated server or web-based application that collects data from all base stations.

web-based application: Encrypted managing software that is coded in a browser-supported language and is executable via a common internet web browser (e.g., Microsoft Internet Explorer, Firefox, Safari, etc.).

satellite controller: Irrigation controller that communicates directly to a base station or centralized server.

network communication: Identified means through which satellite controllers, base stations, and a centralized server communicate to one another (i.e., fiber optics, spread spectrum, phone line, etc.).

remote access device: Device (i.e., FCC compliant radio remote, cell phone or wireless, etc.) used to communicate with satellite controllers from a remote location.

20-2.07A(3) Submittals

Submit as an informational submittal, a complete manufacturer's maintenance and operations manual for each type of controller installed. Submit the manual at the time the wiring plans and diagrams are placed inside the controller enclosure or cabinet door.

20-2.07A(4) Quality Control and Assurance

Provide training by a qualified person on the use and adjustment of the irrigation controllers installed 30 days before Contract acceptance.

Modifications to electrical components must be done by the manufacturer before shipment to the job site.

The installation date and expiration date of the manufacturer's guarantee for the controllers must be permanently marked on the inside face of the controller.

20-2.07B Materials

20-2.07B(1) General

Conventional A/C powered irrigation controllers must operate on 110/120 V, 60 Hz(ac) and supply 24 to 30 VAC, 60 Hz(ac) for operating electrical remote control valves.

Concrete for the pad and foundation must be minor concrete, except the concrete must not contain less than 463 pounds of cementitious material per cubic yard. Hand mixing of the concrete is allowed.

20-2.07B(2) Irrigation Controllers

20-2.07B(2)(a) General

The irrigation controllers must:

1. Be A/C, battery, solar, or 2-wire as shown
2. Be from a single manufacturer.
3. Be fully automatic and capable of operating a complete 30-day or longer irrigation program.
4. Have a switch or button on the face of the irrigation control panel showing that the irrigation controller can be turned on or off and provide for automatic or manual operation. Manual operation must allow cycle start at the desired station and allow for the minimum activation of a single station or have the option to operate multiple stations in sequential or simultaneous operation modes.
5. Have non-volatile memory.
6. Have a watering time display on the face of the control panel.
7. Have a panel and circuit board connected to the low voltage control and neutral conductors by means of a plug and receptacle connectors located within the cabinet enclosure.
8. Have a variable or incremental timing adjustment ranging from 1 minute to 360 minutes per station.
9. Be capable of operating at least 3 program schedules.
10. Be capable of having at least 4 start times per program schedule.
11. Have an output that can energize a pump start circuit or a remote control master valve.
12. Be protected by fuses and circuit breakers.
13. Display a program and station affected by a sensory alert without altering other watering schedules not affected by the alert.
14. Be capable of global manual and automatic seasonal adjustments to all valves in any given program.
15. Automatically alter watering schedule in accordance with evapotranspiration data provided by a local weather station or have an internal programmed default of historical evapotranspirational data for a given region.
16. Support a flow sensor, rain sensor, or weather station and have automatic shut-off capability.
17. Be capable of communicating with the remote access device.

If the irrigation controller is installed in an enclosure cabinet, the cabinet must be stainless steel and must comply with section 86-3.04A.

Irrigation controllers not installed in enclosure cabinets must be weatherproof, constructed of fiberglass or metal and have a door lock with 2 keys provided.

RICS must meet the requirements of an irrigation controller and be capable of being accessible only through a secured and encrypted server that is password and firewall protected by the Department or be

accessible through a firewall secure remote server that is independent from any Department servers. The Department will set up and manage the network communication.

20-2.07B(2)(b) Battery Powered Irrigation Controllers

Reserved

20-2.07B(2)(c) Solar Powered Irrigation Controllers

Reserved

20-2.07B(2)(d) Two-wire Irrigation Controllers

Reserved

20-2.07B(3) Irrigation Controller Enclosure Cabinets

The irrigation controller enclosure cabinet must:

1. Be stainless steel.
2. Include a mounting panel. Fabricate mounting panels with one of the following:
   - 2.1. 3/4-inch exterior AC grade veneer plywood. Paint panels with 1 application of an exterior, latex based, wood primer and 2 applications of an exterior, vinyl acrylic enamel, white in color. Paint panels on all sides and edges before installation of the panels in the cabinets and the equipment on the panels.
   - 2.2. 3/16-inch thick aluminum sheets.
   - 2.3. 10-gauge cold-rolled steel sheets.
   - 2.4. 0.157-inch stainless steel metal sheets.
3. Provide cross ventilation, roof ventilation, or a combination of both. Ventilation must not compromise the weather resistance properties of the cabinet and must be fabricated by the cabinet manufacturer.
4. Include protection against lightning damage.
5. Have an area inside the cabinet doors for storage of the as-built schematic wiring diagram and irrigation plans.
6. Have padlock clasp or latch and lock mechanism.

20-2.07B(4) Rain Sensors

A rain sensor unit must be a solid state, automatic shut-off type, and compatible with the irrigation controller. The rain sensor unit must automatically interrupt the master remote control valves when approximately 1/8 inch of rain has fallen. The irrigation controller must automatically be enabled again when the accumulated rainfall evaporates from the rain sensor unit collection cup.

Rain sensor units must be one of the following:

1. Rated 24 V(ac) to 30 V(ac)
2. Wireless and FCC compliant

20-2.07C Construction

Finish exposed top surface of concrete pad with a medium broom finish applied parallel to the long dimension.

Locate irrigation controllers in pedestal or wall mounted enclosures as shown.

Install electrical components for automatic irrigation systems under section 86-1.02.

Install irrigation controllers under the manufacturer's instructions and as shown.

If 2 or more irrigation controllers operate the same remote master control valve, furnish and install an isolation relay under the controller manufacturer's instructions.

Where direct burial conductors are to be connected to the terminal strip, connect the conductors with the open-end-crimp-on wire terminals. Exposed wire must not extend beyond the crimp of the terminal and the wires must be parallel on the terminal strip.

Install rain sensor units for irrigation controllers on the irrigation controller enclosure cabinets. Provide protection against lightning damage.

20-2.07D Payment

Payment for electrical service for 120-volt or higher is not included in the payment for irrigation controller.

20-2.08 IRRIGATION CONDUIT

20-2.08A General

20-2.08A(1) Summary

Section 20-2.08 includes specifications for installing irrigation conduit under a roadway or other facility to accommodate electrical conduit for control and neutral conductors and irrigation supply lines.

Before performing work on irrigation systems, locate existing conduits shown to be incorporated into the new work.

Before removing or disturbing existing Type A pavement markers that show the location of the existing conduit, mark the location of the existing conduit on the pavement.

20-2.08A(2) Definitions

Reserved

20-2.08A(3) Submittals

Reserved

20-2.08A(4) Quality Control and Assurance

Demonstrate the conduits are free of obstructions after placement of base and surfacing.

Before and after extending the irrigation supply line in a conduit, pressure test the supply line under section 20-2.01A(4)(b).

After conductors are installed in a conduit, test the conductors under section 20-2.05A(4).

Assign a technical representative to direct and control the directional bore activities. The representative must be present during directional bore activities. Unless otherwise authorized, perform directional bore activities in the presence of the Engineer.

20-2.08B Materials

20-2.08B(1) General

Reserved

20-2.08B(2) ABS Composite Pipe Conduit

ABS composite pipe and couplings must comply with ASTM D 2680. Couplings must be solvent cement type.

20-2.08B(3) Corrugated High Density Polyethylene Pipe Conduit

Corrugated high density polyethylene pipe must comply with ASTM F 405 and F 667 or be Type S and comply with AASHTO M252 and M294. Couplings and fittings must be as recommended by the pipe manufacturer.

20-2.08B(4) Corrugated Steel Pipe Conduit

Corrugated steel pipe conduit must comply with section 66. The nominal thickness of metal sheets for pipe must be 0.064 inch for corrugated steel pipe and 0.060 inch for corrugated aluminum pipe. Coupling bands and hardware must comply with section 66.

20-2.08B(5) Polyvinyl Chloride Pipe Conduit

PVC pipe conduit must be schedule 40 and comply with ASTM D 1785.

Fittings must be schedule 80.

20-2.08B(6) Welded Steel Pipe Conduit

Welded steel pipe must comply with ASTM A 53. Pipe must be black and have either welded or threaded joints.

The minimum wall thickness for the various sizes of welded steel pipe must comply with the dimensions shown in the following table:

Pipe size, nominal (inch)	Minimum wall thickness (inch)
3	0.216
4	0.237
6	0.280
8	0.277
10	0.279
12	0.330

20-2.08C Construction

20-2.08C(1) General

When existing conduits are to be incorporated in new work, excavate exploratory holes for locating existing conduits at the locations indicated by existing markers or as directed. Excavate and backfill exploratory holes to a maximum size of 2-1/2 feet in width, 5 feet in depth, and 5 feet on each side of the marker or directed location parallel to the roadway. If the conduit is not found and if ordered, increase the size of the exploratory holes beyond the dimensions specified. The additional excavation and backfill is change order work.

If extending an existing conduit, remove conductors from the conduit.

Use a coupling band if the new conduit matches the existing conduit diameter, otherwise overlap the conduit at least 12 inches.

After extending existing conduits, install conductors that match the color and size of the existing conductors without splices. Splice conductors in adjacent pull boxes.

If installing a control and neutral conductor and electrical conduit through the irrigation conduit, install a no. 5 pull box at each end.

Remove debris found in the conduit before performing other work. Debris found more than 3 feet from the ends of the conduits is removed as change order work.

Extend conduit 2 feet beyond all paving unless otherwise shown.

Cap the ends of unused conduit.

Designate the location of each conduit by cementing a Type A pavement marker as shown. Type A pavement markers and adhesive must comply with section 85.

20-2.08C(2) Welded Steel Pipe Conduit

20-2.08C(2)(a) General

Install welded steel pipe by directional boring or jack and drill.

Install top of conduits:

1. 18 to 30 inches below the finished surface in sidewalk areas
2. 40 to 52 inches below the finished grade in other paved areas

20-2.08C(2)(b) Directional Boring

Notify the Engineer 2 business days before starting directional bore activities.

The diameter of the boring tool for directional boring must be only as large as necessary to install the conduit.

Mineral slurry or wetting solution may be used to lubricate the boring tool and to stabilize the soil surrounding the boring path. The mineral slurry or wetting solution must be water based.

The directional bore equipment must have directional control of the boring tool and have an electronic boring tool location detection system. During operation, the directional bore equipment must be able to determine the location of the tool both horizontally and vertically.

20-2.08C(2)(c) Jack and Drill

Notify the Engineer 2 business days before starting jack and drill activities.

Jacking or drilling pits must be no closer than 2 feet from pavement edge whenever possible.

If authorized, small holes may be cut in the pavement to locate or remove obstructions.

Do not use excessive water that will soften subgrade or undermine pavement.

20-2.08C(3) Schedule 40 Pipe Conduit

Where schedule 40 pipe conduit 2 inches or less in outside diameter is installed under surfacing, you may install by directional boring under section 20-2.08C(2)(b).

For conduit 2 inches or less in diameter, the top of the conduit must be a minimum of 18 inches below surfacing.

Extend schedule 40 pipe conduit 6 inches beyond surfacing. Cap ends of conduit until used.

20-2.08D Payment

Schedule 40 PVC pipe conduit is paid for as plastic pipe (schedule 40) (supply line).

20-2.09 IRRIGATION SUPPLY LINE

20-2.09A General

20-2.09A(1) Summary

Section 20-2.09 includes specifications for installing irrigation supply line.

If the supply line location interferes with the excavation of plant holes, relocate the plant hole to clear the supply line. Do not install supply lines through plant holes unless shown.

Supply lines, control and neutral conductors and electrical conduits installed in common trenches must not be installed above each other.

20-2.09A(2) Definitions

Reserved

20-2.09A(3) Submittals

Submit a certificate of compliance for polyethylene pipe and plastic pipe supply line.

20-2.09A(4) Quality Control and Assurance

Solvent cement must comply with the local Air Quality Management District requirements.

20-2.09B Materials

20-2.09B(1) General

Irrigation supply pipe must be metal or plastic as shown.

PCC for thrust blocks must be produced from commercial-quality aggregates. The concrete must contain at least 295 pounds of cementitious material per cubic yard.

20-2.09B(2) Copper Pipe Supply Line

Copper pipe must be Type K rigid pipe and comply with ASTM B 88. Fittings must be wrought copper or cast bronze either soldered or threaded.

Solder must be 95 percent tin and 5 percent antimony.

20-2.09B(3) Galvanized Steel Pipe Supply Line

Galvanized steel pipe supply line and couplings must be standard weight and comply with ASTM A 53, except that the zinc coating must not be less than 90 percent of the specified amount. Except for

couplings, fittings must be galvanized malleable iron, banded and threaded, and comply with ANSI B16.3, Class 150.

Joint compound must be nonhardening and noncorrosive. Do not use pipe thread sealant tape.

20-2.09B(4) Drip Irrigation Tubing

Drip irrigation tubing must be virgin polyethylene plastic and comply with ASTM D 2737.

The drip irrigation tubing must be distribution tubing with preinstalled in-line emitters.

If preinstalled in-line drip irrigation tubing is not shown, you may install emitters that match the distribution requirements shown. The emitters must be barbed or threaded-type outlet devices with dual silicone diaphragms and installed under the manufacturer's instructions.

The emitters must meet the flow rate and operating pressure range shown.

The wall thickness of polyethylene tubing must comply with the following requirements when tested under ASTM D 2122:

Pipe size, nominal (inch)	Minimum wall thickness (inch)	Maximum wall thickness (inch)
1/2	0.050	0.070
5/8	0.055	0.075
3/4	0.060	0.080

The polyethylene tubing fittings must be leak-free, compression type and have female sockets with an internal barb to provide a positive pipe-to-fitting connection that will not separate at the designed pressure.

20-2.09B(5) Plastic Pipe Supply Line

Plastic pipe supply line must be PVC pipe that is NSF approved.

Schedule 40 plastic pipe supply line must comply with ASTM D 1785.

Class 315 plastic pipe supply line must comply with ASTM D 2241.

PVC gasketed bell joints must comply with ASTM D 2672, ASTM D2241, ASTM D 3139, and ASTM F 477.

For solvent-cemented type joints, the primer and solvent cement must be made by the same manufacturer. The primer color must contrast with the color of the pipe and fittings.

Solvent-cemented fittings must be injection molded PVC, schedule 40, and comply with ASTM D 2466.

Fittings for supply line placed in irrigation conduit must be schedule 80.

Fittings for plastic pipe supply line larger than 4 inches must be ductile iron under section 20-2.14C(2)(b).

If UV-resistant plastic pipe supply line is required, the pipe must be homogeneous, uniform color and be manufactured of:

1. At least 80 percent vinyl chloride resin with UV stabilizers
2. Non-PVC resin modifiers and coloring ingredients
3. Coloring ingredients with UV stabilizers

20-2.09C Construction

20-2.09C(1) General

Cut pipe straight and true. After cutting, ream out the ends to the full inside diameter of the pipe.

05-30-14

Prevent foreign material from entering the irrigation system during installation. Immediately before assembling, clean all pipes, valves, and fittings. Flush lines before attaching sprinklers, emitters, and other terminal fittings. Reuse water from waterline flushing for landscape irrigation if practicable.

07-19-13

Pipe supply lines installed between the water meter and backflow preventer assembly must be installed not less than 18 inches below finished grade measured to the top of the pipe.

Where a connection is made to existing supply lines, bell and gasketed fittings or compression fittings may be used.

Install a thrust block at each change in direction on the main supply line, terminus run, and at other locations shown.

Where supply lines cross paved ditches more than 3 feet deep at their flow line, install galvanized steel pipe for the entire span of the ditch.

Secure UV resistant plastic pipe supply line on grade as shown.

20-2.09C(2) Galvanized Steel Pipe Supply Line

Coat male pipe threads on galvanized steel pipe according to the manufacturer's instructions.

20-2.09C(3) Drip Irrigation Tubing

Install drip irrigation tubing on grade and under manufacturer's instructions.

Install a flush valve and an air-relief valve if recommended by the drip valve assembly manufacturer.

20-2.09C(4) Plastic Pipe Supply Line

For PVC pipe 1-1/2 inches in diameter or smaller, cut the pipe with PVC cutters.

For solvent-cemented type joints, apply primer and solvent-cement separately under the manufacturer's instructions.

Wrap the male portion of each threaded plastic pipe fitting with at least 2 layers of pipe thread sealant tape.

Install plastic pipe supply line mains with solvent-cemented type joints not less than 18 inches below finished grade measured to the top of the pipe.

Install plastic pipe supply line laterals with solvent-cemented type joints not less than 12 inches below finished grade measured to the top of the pipe.

Snake plastic pipe installed by trenching and backfilling methods.

20-2.09D Payment

Supply line pipe and drip irrigation tubing are measured along the slope.

20-2.10 SPRINKLER ASSEMBLIES

20-2.10A General

Section 20-2.10 includes specifications for installing sprinkler assemblies.

20-2.10B Materials

20-2.10B(1) General

Each sprinkler assembly must meet the characteristics shown in the irrigation legend.

Where shown, a sprinkler assembly must have a flow shut-off device that automatically stops the flow of water on the downstream side of the device when the assembly is broken. You may use a sprinkler assembly with a preinstalled flow shut-off device or you must install a flow shut-off device under the manufacturer's instructions.

Flexible hose for sprinkler assembly must be leak-free, nonrigid and comply with ASTM D 2287, cell Type 6564500. The hose wall thickness must comply with ASTM D 2122 for the hose diameters shown in the following table:

Hose diameter, nominal (inch)	Minimum wall thickness (inch)
1/2	0.127
3/4	0.154
1	0.179

Solvent cement and fittings for flexible hose must comply with section 20-2.09B(5).

20-2.10B(2) Pop-Up Sprinkler Assemblies

Each pop-up sprinkler assembly must include a body, nozzle, swing joint, pressure compensation device, check valve, sprinkler protector, and fittings as shown.

20-2.10B(3) Riser Sprinkler Assemblies

11-15-13

Each riser sprinkler assembly must include a riser or flexible hose, threaded nipple, swing joint, check valve, and nozzle as shown. The riser must be UV resistant schedule 80, PVC 1120 or PVC 1220 pipe and comply with ASTM D 1785.

20-2.10B(4) Tree Well Sprinkler Assemblies

Each tree well sprinkler assembly must include a body, riser, swing joint, perforated drainpipe, and drain cap.

07-19-13

The perforated drainpipe must be commercial grade, rigid, PVC pipe with holes spaced not more than 6 inches on center on 1 side of the pipe.

Drain cap must be commercially available, 1 piece, injection molded drain grate manufactured from structural foam polyolefins with UV light inhibitors. Drain grate must be black.

Gravel for filling the drainpipe must be graded such that 100 percent passes the 3/4-inch sieve and 100 percent is retained on the 1/2-inch sieve. Gravel must be clean, washed, dry, and free from clay or organic material.

20-2.10C Construction

Install pop-up and riser sprinkler assembly:

1. 6-1/2 to 8 feet from curbs, dikes, and sidewalks
2. 10 feet from paved shoulders
3. 3 feet from fences and walls

If sprinkler assembly cannot be installed within these limits, the location will be determined by the Engineer.

Set sprinkler assembly riser on slopes perpendicular to the plane of the slope.

Install tree well sprinkler assembly as shown.

20-2.10D Payment

Not Used

20-2.11 VALVES

20-2.11A General

Section 20-2.11 includes specifications for installing valves.

20-2.11B Materials

20-2.11B(1) General

Valves must:

1. Include a valve box and cover
2. Be the same size as the supply line that the valve serves unless otherwise shown
3. Be bottom, angled, or straight inlet configuration

20-2.11B(2) Ball Valves

Ball valve must be a two-piece brass or bronze body and comply with the requirements shown in the following table:

Property	Requirements
Nonshock working pressure, min	400 psi
Seats	PTFE
O-ring seals	PTFE

Ball valve must be the same size as the supply line that the valve serves.

20-2.11B(3) Check Valves

Each check valve must:

1. Be schedule 80 PVC and factory set to 5 psi for adjustable spring check valve
2. Be Class 200 PVC for swing check valves on non pressurized plastic irrigation supply line

20-2.11B(4) Drip Valve Assemblies

Each drip valve assembly must include:

1. Remote control valve
2. Wye filter with:
   - 2.1. Filter housing that:
     - 2.1.1. Can withstand a working pressure of 150 psi
     - 2.1.2. Is manufactured of reinforced polypropylene plastic
   - 2.2. Reusable stainless steel filter cartridge with a 200 mesh size filtration
3. Ball valve under 20-2.11B(2)
4. Schedule 80 PVC pipes and fittings
5. Pressure regulator

20-2.11B(5) Garden Valve Assemblies

Each garden valve assembly must have:

1. Garden valve
2. Location marker

20-2.11B(6) Gate Valves

Gate valves must be:

1. Flanged or threaded type
2. Iron or bronze body
3. Bronze trimmed with one of the following:
   - 3.1. Internally threading rising stem
   - 3.2. Nonrising stem
4. Able to withstand a working pressure of 150 psi
5. Same size as the pipeline that the valves serves unless otherwise shown

Gate valves smaller than 3 inches must have a cross handle.

Gate valves 3 inches or larger must be flanged type with a square nut. Furnish 3 long shank keys before Contract acceptance.

Gate valves attached to the outlets of a wye strainer must have seating rings on the discharge side of the gate valves must be PTFE. Valve wedges must be driven obliquely by cam action into the seating rings.

20-2.11B(7) Pressure Regulating Valves

Pressure regulating valve must be:

1. Flanged or threaded type
2. Brass, bronze, cast iron, or plastic body
3. Spring diaphragm type
4. Pilot controlled

Pressure regulating valve must have no internal filter screens.

20-2.11B(8) Pressure Relief Valves

Pressure relief valve must have a brass or bronze body, stainless steel springs, bronze nickel chrome seats, composition seat discs, female bottom inlets, and female side outlets.

20-2.11B(9) Quick Coupling Valves

Quick coupling valve must be 3/4 inch double slotted with a self-closing cap, 3/4-inch brass key and 3/4-inch brass hose swivel unless otherwise shown. Except for the cap, quick coupling valve must be brass or bronze construction. Furnish 3 loose quick coupling brass keys and brass hose swivels before Contract acceptance.

20-2.11B(10) Remote Control Valves

20-2.11B(10)(a) General

Each remote control valve must:

1. Be normally closed type.
2. Be glass filled nylon, brass, or bronze.
3. Be completely serviceable from the top without removing the valve body from the system.
4. Be equipped with a device that regulates and adjusts the flow of water and be provided with a manual shut-off. The manual shut-off for valves larger than 3/4 inch must be operated by a cross handle.
5. Have solenoids compatible with the irrigation controller.
6. Have a manual bleed device.
7. Be capable of withstanding a pressure of 200 psi
8. Have replaceable compression discs or diaphragms.
9. Have threaded fittings for inlets and outlets.
10. Have DC latching solenoids when used with solar or battery controllers. Solenoids must operate on 3.5 V.

20-2.11B(10)(b) Remote Control Valves with Flow Sensor

Reserved

20-2.11B(10)(c) Remote Control Valves with Pressure Regulator

Each remote control valve with pressure regulator must be factory assembled as 1 unit.

20-2.11B(11) Wye Strainer Assemblies

Each wye strainer assembly must include:

1. Wye strainer
2. Garden valve

20-2.11C Construction

20-2.11C(1) General

Install control valves:

1. 6-1/2 to 8 feet from curbs, dikes, and sidewalks
2. 10 feet from paved shoulders
3. 3 feet from fences, walls, or both

If a control valve cannot be installed within these limits, the location will be determined by the Engineer.

20-2.11C(2) Check Valves

Unless otherwise shown, install spring-action check valves as necessary to prevent low head drainage.

20-2.11C(3) Garden Valve Assemblies

Install a location marker 8 to 10 inches from the back of each garden valve.

20-2.11C(4) Pressure Regulating Valves

Install pressure regulating valves with threaded connections and a union on the inlet side of the valves.

20-2.11C(5) Wye Strainer Assemblies

Unless shown, install wye strainer assembly on the upstream side of the remote control valves.

Install garden valve so that when the system is flushed, the discharge sprays out of the valve box.

20-2.11D Payment

Not Used

05-30-14

20-2.12–20-2.13 RESERVED

07-19-13

20-2.14 SUPPLY LINE ON STRUCTURES

20-2.14A General

20-2.14A(1) General

20-2.14A(1)(a) Summary

Section 20-14 includes specifications for installing water supply lines through bridges and on the exterior of concrete structures.

20-2.14A(1)(b) Definitions

Reserved

20-2.14A(1)(c) Submittals

Submit a work plan for temporary casing support at the abutments as an informational submittal.

20-2.14A(1)(d) Quality Control and Assurance

20-2.14A(1)(d)(i) General

Before installing seismic expansion assemblies or expansion assemblies, the Engineer must authorize the extension setting.

20-2.14A(1)(d)(ii) Regulatory Requirements

Piping materials must bear the label, stamp, or other markings of the specified standards.

20-2.14A(1)(d)(iii) Site Tests

Test water supply lines before:

1. Backfilling
2. Beginning work on box girder cell decks
3. Otherwise covering the water supply lines

Furnish pipe anchorages to resist thrust forces occurring during testing.

Test the water supply lines as 1 unit. The limits of the unit must be 5 feet beyond the casing at each end of the bridge.

Cap each end of the water supply lines before testing. Caps must be rated for the test pressure.

Test water supply lines under section 20-2.01A(4)(b), except that the testing period must be 4 hours with no pressure drop.

For water supply lines 4 inches and larger testing must meet the following additional requirements:

1. Testing pressure must be at least 120 psi

2. Air relief valve must not be subjected to water pressure due to testing

If water supply lines fail testing, retest the lines after repair.

20-2.14A(2) Materials

20-2.14A(2)(a) General

Protect stored piping from moisture and dirt. Elevate piping above grade. Support piping to prevent sagging and bending.

Protect flanges, fittings, and assemblies from moisture and dirt.

20-2.14A(2)(b) Air Release Valve Assemblies

Air release valve assemblies include an air release valve, ball valve, tank vent, nipples, and pipe saddle. Assemblies must comply with the following:

1. Air release valves must have a cast iron body with stainless steel trim and float, 1-inch NPT inlet, 1/2-inch NPT outlet, and 3/16-inch orifice.
2. Ball valves must have a 2-piece bronze body with chrome plated or brass ball, 1-inch full-size port, and be rated for at least 400 psi.
3. Tank vents must have a 1/2-inch NPT inlet and downward-facing double openings with screened covers.
4. Nipples must be schedule 40 galvanized steel pipe.
5. Pipe saddle must be rated for at least 150 psi and compatible with water supply line. Pipe saddle must be (1) single strap pipe saddle for water supply lines smaller than 4 inches or (2) double strap pipe saddle for water supply lines 4 inches and larger. You may use a tee fitting for galvanized steel water supply lines.

20-2.14A(2)(c) Casings

Casings must be welded steel pipe casing complying with section 70-7.

20-2.14A(2)(d) Pipe Wrap Tape

Pipe wrap tape must be pressure sensitive tape made from PVC or polyethylene. Pipe wrap tape must be at least 50 mils thick and not wider than 2 inches.

20-2.14A(2)(e) Pipe Hangers

Pipe hangers must comply with section 70-7.02C.

The pipe hanger must be rated for the water supply line. If casings are shown, include the casings weight.

20-2.14A(2)(f) Epoxy Adhesives

Epoxy used for anchoring concrete pipe supports must comply with section 70-7.02D.

20-2.14A(2)(g) Concrete Pipe Supports

Concrete pipe supports must comply with section 70-7.02D.

20-2.14A(2)(h) Pipe Clamps and Anchors

Metal clamps must be commercial quality steel complying with section 75-1.02. Anchors must comply with the specifications for concrete anchorage devices in section 75-1.03C.

20-2.14A(2)(i) Pull Boxes

Pull boxes and covers must comply with section 20-2.01B(5).

20.2.14A(3) Construction

20-2.14A(3)(a) General

Support water supply lines as described.

Where water supply lines penetrate bridge superstructure concrete, either form or install pipe sleeves at least 2 pipe sizes larger than the pipe.

20-2.14A(3)(b) Preparation

Clean the interior of the pipe before installation. Cap or plug openings as pipe is installed to prevent the entrance of foreign material. Leave caps or plugs in place until the next pipe section is installed.

20-2.14A(3)(c) Installation

20-2.14A(3)(c)(i) General

Reserved

20-2.14A(3)(c)(ii) Casings

Install casings under section 70-7.03.

Seal casing end with 8 inches of polyurethane foam at dirt stop or pipe end seal.

20-2.14A(3)(c)(iii) Wrapping Water Supply Line

Wrap damaged supply line coatings with pipe wrap tape. Wrap field joints and fittings that are in contact with the earth.

Wrapping must comply with the following:

1. Clean and prime area as recommended by the tape manufacturer.
2. Tightly wrap tape with 1/2 uniform overlap, free from wrinkles and voids, to provide not less than a 100 mil thickness.
3. The tape must conform to joint or fitting contours.
4. Extend tape at least 6 inches over adjacent pipe.

20-2.14A(3)(c)(iv) Pipe Clamps and Anchors

Install water supply lines on the exterior surfaces of bridges or other concrete structures with metal clamps and anchors.

Drilling of holes for anchors must comply with the following:

1. Drill holes to manufacturers recommended depth.
2. Drilling tools must be authorized.
3. Do not drill holes closer than 6 inches to the edge of a concrete structure.
4. Relocate holes if reinforcing steel is encountered. Fill abandoned holes with mortar. Mortar must comply with section 51-1.02F.

Where water supply lines are mounted vertically for more than 2 feet, install clamps and anchors within 6 inches of the elbows.

Where water supply lines are mounted vertically for more than 10 feet, install additional clamps and anchors at 10 foot centers unless otherwise shown.

20-2.14A(3)(d) Sequences of Operation

If the bridge superstructure is to be prestressed do not place mortar around casings in abutments and hinges until bridge superstructure prestressing has been completed.

20-2.14A(4) Payment

Supply line on structures is measured from end to end, along the centerline.

The Department does not pay for failed tests.

20-2.14B Supply Line on Structures, Less than 4 Inches

20-2.14B(1) General

20-2.14B(1)(a) Summary

Section 20-2.14B includes specifications for installing water supply lines smaller than 4 inches.

20-2.14B(1)(b) Definitions

Reserved

20-2.14B(1)(c) Submittals

Product data for materials includes catalog cuts, performance data, and installation instructions.

Submit product data for:

1. Water supply line
2. Expansion assemblies
3. Casing insulators
4. Pipe end seals
5. Pipe anchorages
6. Air release valve assemblies
7. Casings
8. Pipe hangers
9. Epoxy adhesives
10. Concrete pipe supports

20-2.14B(1)(d) Quality Control and Assurance

Reserved

20-2.14B(2) Materials

20-2.14B(2)(a) General

Reserved

20-2.14B(2)(b) Water Supply Line

Water supply lines must comply with section 20-2.09.

20-2.14B(2)(c) Expansion Assemblies

Expansion assemblies must consist of a hose with ends, insulated flange connections, and elbows. Expansion assemblies must have the same nominal inside diameter as the water supply line. Working pressure must be at least 150 psi.

Hose must be medium or heavy weight, crush and kink resistant, rated for at least 150 psi. Cover must be flexible, oil resistant rubber or synthetic, reinforced with at least 2-ply synthetic yarn or steel wire. The inner tube must meet FDA and USDA Standards for potable water. Hose ends must be stainless steel flanged connections with stainless steel crimped bands or swaged end connectors. Do not use barbed ends with band clamps.

Elbows must be 45 degree, standard weight galvanized steel fittings.

20-2.14B(2)(d) Casing Insulators

Casing insulators must be:

1. 2-piece, high-density, injection-molded polyethylene, nonconductive inner liner, with cadmium-plated nuts and bolts.
2. Factory constructed to ensure the water supply line is centered in the casing. Insulators must not allow any contact between pipe and casing and have at least 2 runners seated on the bottom of the casing.
3. Sized for the casing and water supply line shown.

20-2.14B(2)(e) Pipe Anchorages

Pipe anchorages must consist of an I-beam, U-bolts, anchors, and double nuts.

Use concrete anchorage devices for anchors on existing bridges. Use L-anchor bolts for anchors on new bridges.

Fabricate the I-beam from 1/2-inch steel plate. Steel plate, U-bolts, L-anchors, and nuts must comply with section 75-1.02. Concrete anchorage devices must comply with section 75-1.03C.

20-2.14B(2)(f) Pipe End Seals

Pipe end seals must consist of a pipe end seal, stainless steel bands, and polyurethane foam.

Pipe end seal must be factory constructed from seamless neoprene and sized for the casing and water supply line shown. Neoprene must be at least 1/8 inch thick. Stainless steel bands must be crimped.

Polyurethane foam must be expanding foam spray that is water resistant and moisture cured.

20-2.14B(3) Construction

Locate pipe anchorage halfway between expansion assemblies.

Pipe end seal must be pulled onto the casing during pipe installation. Do not use wrap-around type end seals.

20-2.14B(4) Payment

Supply line on structures is paid for as galvanized steel pipe (supply line on bridge).

20-2.14C Supply Line on Structures, 4 Inches and Larger

20-2.14C(1) General

20-2.14C(1)(a) Summary

Section 20-2.14C includes specifications for installing water supply lines 4 inches and larger.

20-2.14C(1)(b) Definitions

Reserved

20-2.14C(1)(c) Submittals

Product data for materials includes catalog cuts, performance data, and installation instructions.

Submit product data for:

1. Water supply line
2. Expansion assemblies
3. Flange insulating gaskets
4. Casing insulators
5. Seismic expansion assemblies
6. Lateral restraint assemblies
7. Air release valve assemblies
8. Casings
9. Pipe hangers
10. Epoxy adhesives
11. Concrete pipe supports

Submit the maximum range and preset dimension for each expansion assembly or seismic expansion assembly as an informational submittal.

Submit at least 5 sets of product data to OSD, Documents Unit. Each set must be bound together and include an index stating equipment names, manufacturers, and model numbers. Two sets will be returned. Notify the Engineer of the submittal. Include in the notification the date and contents of the submittal.

20-2.14C(1)(d) Quality Control and Assurance

Reserved

20-2.14C(2) Materials

20-2.14C(2)(a) General

Reserved

20-2.14C(2)(b) Water Supply Line

Water supply lines must consist of ductile iron pipe and fittings. Pipe must comply with ANSI/AWWA C151/A21.51, Class 350. Fittings must comply with ANSI/AWWA C110/A21.10, rated for a working pressure of 350 psi.

Ductile iron pipe connections to expansion assemblies must be a flanged joint complying with ANSI/AWWA C115/A21.15. Flange gaskets must be rated for a working pressure of 350 psi. Fasteners must comply with section 75-1.02, except that stainless steel fasteners must not be used.

All other ductile iron pipe and fitting joints must be push-on, restrained type complying with ANSI/AWWA C111/A21.11. Push-on, restrained type joints may use proprietary dimensions and proprietary restrained joint locking systems.

Ductile iron pipe and fittings must have an asphaltic coating complying with ANSI/AWWA C151/A21.51, and a cement mortar lining complying with ANSI/AWWA C104/A21.4.

20-2.14C(2)(c) Expansion Assemblies

Expansion assemblies must be a sleeve type expansion joint. The expansion assembly must have:

1. Ductile iron body complying with ANSI/AWWA C153/A21.53
2. Flanged ends complying with ANSI/AWWA C110/A21.10
3. Fusion bonded epoxy internal lining complying with ANSI/AWWA C213 at least 15 mils thick
4. Internal expansion sleeve limiting stop collars and be pressure balanced
5. Working pressure of at least 350 psi for sizes 24 inches and smaller and 250 psi for sizes larger than 24 inches
6. NSF 61 certification

The expansion assembly must be factory set at 1/2 the extension capacity.

20-2.14C(2)(d) Flange Insulating Gaskets

Flange insulating gaskets must consist of a dielectric flange gasket, insulating washers and sleeves, and commercial quality steel bolts and nuts. Dielectric flange gasket must have a dielectric strength of at least 500 vpm.

20-2.14C(2)(e) Casing Insulators

Casing insulators must be:

1. 2-piece, 8-inch, 14-gauge epoxy-coated or galvanized steel band, four 2-inch-wide glass-reinforced polyester or polyethylene runners, with cadmium-plated nuts and bolts.
2. Coated with at least 15-mils heat-fused PVC to provide a nonconductive inner liner.
3. Factory constructed to ensure the water supply line is centered in the casing. Insulators must not allow any pipe to casing contact and have at least 2 runners seated on the bottom of the casing.
4. Sized for the casing and water supply line shown.

20-2.14C(2)(f) Dirt Stops

Dirt stops must consist of a redwood cover with polyurethane foam.

Use construction heart grade redwood complying with 57-2.01B(2). Construct cover to fit snugly around the water supply line. The cover must be 2 inches taller and 2 inches wider than the casing.

Polyurethane foam must be expanding foam spray that is water resistant and moisture cured.

20-2.14C(2)(g) Seismic Expansion Assemblies

Seismic expansion assemblies must be a sleeve type expansion joint with integral ball joints at each end.

Seismic expansion assemblies must have:

1. Ability to withstand at least 15 degree angular deflection at each end and maximum movement in all 3 planes at the same time
2. Ductile iron body complying with ANSI/AWWA C153/A21.53
3. Flanged ends complying with ANSI/AWWA C110/A21.10
4. Fusion bonded epoxy internal lining complying with ANSI/AWWA C213 at least 15 mils thick
5. Internal expansion sleeve limiting stop collars and pressure balanced
6. Ball joints contained in flanged retainers with seal gaskets
7. Working pressure of at least 350 psi for sizes 24 inches and smaller and 250 psi for sizes larger than 24 inches

8. NSF 61 certification

The seismic expansion assembly must be factory set at 1/2 the extension capacity.

20-2.14C(2)(h) Lateral Restraint Assemblies

Lateral restraint assemblies must be (1) constructed from commercial quality steel components complying with section 75-1.02, (2) adjustable, and (3) able to resist a horizontal force of 10 percent of the contributory dead load.

20-2.14C(3) Construction

Each ductile iron pipe must be connected and fully extended (pulled out) after joint assembly before the next pipe section is added.

Install flange insulating gaskets on the outside flange of seismic expansion assemblies and expansion assemblies.

20-2.14C(4) Payment

Supply line on structures is paid for as supply line (bridge).

20-2.15 TEMPORARY IRRIGATION SYSTEMS

Reserved

20-2.16–20-2.19 RESERVED

20-3 PLANTING

20-3.01 GENERAL

20-3.01A General

20-3.01A(1) Summary

Section 20-3 includes specifications for performing planting work in new and existing landscapes.

20-3.01A(2) Definitions

Reserved

20-3.01A(3) Submittals

20-3.01A(3)(a) General

Submit nursery invoices showing species or variety and inspection certificates for plants.

Submit documentation of clearance from the county agricultural commissioner for plants obtained from a county outside the project limits.

If a root stimulant is required, submit a copy of the root stimulant manufacturer's product sheet and instructions for the application of the root stimulant.

If cuttings are to be taken from outside the right-of-way, submit proof of permits and payment of associated fees. Notify the Engineer of the location at least 15 days before taking cuttings.

20-3.01A(3)(b) Vendor Statements

At least 60 days before planting the plants, submit a statement from the vendor that the order for the plants required, including sample plants used for inspection, has been received and accepted by the vendor. The statement from the vendor must include the plant names, sizes, and quantities and the anticipated delivery date.

20-3.01A(3)(c) Certificates of Compliance

Submit a certificate of compliance for:

1. Sod
2. Soil amendment

20-3.01A(4) Quality Control and Assurance

Plants must comply with federal and state laws requiring inspection for diseases and infestations. Inspection certificates required by law must accompany each shipment of plants.

Obtain clearance from the county agricultural commissioner before planting plants delivered from a county outside the project limits.

The Engineer inspects the roots of container-grown sample plants by removing earth from the rootball of not less than 2 plants, nor more than 2 percent of the total number of plants of each species or variety. If container-grown plants are purchased from several sources, the Engineer inspects the roots of not less than 2 of each sample plant species or variety from each source. The rootball of container grown plants must not show evidence of being underdeveloped, deformed, or having been restricted.

If the Engineer finds noncompliant plants, the entire lot represented by the noncompliant sample plants will be rejected.

Cuttings with mature or brown stems and cuttings that have been trimmed will be rejected.

20-3.01B Materials

20-3.01B(1) General

Notify the Engineer at least 10 days before the plants are shipped to the job site.

20-3.01B(2) Plants

20-3.01B(2)(a) General

Plants must be the variety and size shown and true to the type or name shown. Plants must be individually tagged or tagged in groups identifying the plants by species or variety. Tagging is not required for cuttings.

Plants must be healthy, well-formed, not root-bound, free from insect pests and disease, and grown in nurseries inspected by the Department of Food and Agriculture.

The plants must comply with the size and type shown in the following table:

Plant group designation	Description	Container size (cu in)
A	No. 1 container	152–251
B	No. 5 container	785–1242
C	Balled and burlapped	--
E	Bulb	--
F	In flats	--
H	Cutting	--
I	Pot	--
K	24-inch box	5775–6861
M	Liner[a]	--
O	Acorn	--
P	Plugs[a, b]	--
S	Seedling[c]	--
U	No. 15 container	2768–3696

[a]Do not use containers made of biodegradable material.
[b]Grown in individual container cells.
[c]Bare root.

Trucks used for transporting plants must be equipped with covers to protect plants from windburn.

Handle and pack plants in an authorized way for the species or variety.

20-3.01B(2)(b) Cuttings

20-3.01B(2)(b)(i) General

Take cuttings at random from healthy, vigorous plants. Make cuts with sharp, clean tools. Do not take more than 25 percent of an individual plant and not more than 50 percent of the plants in an area.

Keep cuttings covered and wet until planted. Do not allow cuttings to dry or wither.

Plant cuttings no more than 2 days after being cut.

20-3.01B(2)(b)(ii) *Carpobrotus* and *Delosperma* Cuttings

You may take cuttings for new *Carpobrotus* and *Delosperma* groundcover from the existing highway planting areas, but these areas may not provide enough material to complete the work. Contact the local District's encroachment permit office to obtain a permit to harvest cuttings, identify acceptable cutting harvest areas, and to determine acceptable quantities to take.

Take tip cuttings from healthy, vigorous Carpobrotus and Delosperma plants that are free of pests and disease.

Carpobrotus cuttings must be 10 inches or more in length and not have roots.

Delosperma cuttings must be 6 inches or more in length and not have roots.

20-3.01B(2)(b)(iii) Willow Cuttings

Take willow cuttings from areas shown or designated by the Engineer.

Willow cuttings must be:

1. Reasonably straight
2. 20 to 24 inches in length
3. 3/4 to 1-1/2 inch in diameter at the base of the cutting

Cut the top of each willow cutting square above a leaf bud. Cut the base below a leaf bud at approximately a 45 degree angle. Trim off leaves and branches flush with the stem of the cutting.

20-3.01B(2)(b)(iv) Cottonwood Cuttings

Cottonwood cuttings must comply with the requirements for willow cuttings in section 20-3.01B(2)(b)(iii).

20-3.01B(2)(b)(v)–20-3.01B(2)(b)(viii) Reserved

20-3.01B(2)(c) Sod

Sod must:

1. Be grown to comply with the Food & Agri Code
2. Be free from weeds and undesirable types of grasses and clovers
3. Be field-grown on soil containing less than 50 percent silt and clay
3. Have less than 1/2-inch-thick thatch
4. Not be less than 8 months or more than 16 months old
5. Be machine-cut to a uniform soil thickness of 5/8 ± 1/4 inch, not including top growth and thatch

Protect sod with tarps or other protective covers during delivery. Do not allow sod to dry out during delivery or before placement.

20-3.01B(3) Soil Amendment

Soil amendment must comply with the requirements in the Food & Agri Code. Soil amendment must be one or a combination of the following:

1. Sphagnum peat moss
2. Nitrolized fir bark
3. Vermiculite
4. Perlite

20-3.01B(4) Fertilizers

20-3.01B(4)(a) General

Deliver fertilizer in labeled containers showing weight, chemical analysis, and manufacturer's name.

Fertilizer must comply with the requirements of the Food & Agri Code.

20-3.01B(4)(b) Slow-release Fertilizers

Slow-release fertilizer must be a pelleted or granular form with a nutrient release over an 8 to 12 month period and must comply with the chemical analysis ranges shown in the following table:

Ingredient	Content (percent)
Nitrogen (N)	16–21
Phosphoric acid (P)	6–8
Water soluble potash (K)	4–10

20-3.01B(4)(c) Packet Fertilizers

Packet fertilizer must be a biodegradable packet with a nutrient release over a 12 month period. Each packet must have a weight of 10 ± 1 grams and must comply with the chemical analysis shown in the following table:

Ingredient	Content (percent)
Nitrogen(N)	20
Phosphoric acid (P)	10
Water soluble potash (K)	5

20-3.01B(4)(d) Organic Fertilizers

Organic fertilizer must be pelleted or granular with a cumulative nitrogen release rate of no more than 70 percent for the first 70 days after incubation at 86 degrees F with 100 percent at 350 days or more. Organic fertilizer must comply with the chemical analysis shown in the following table:

Ingredient	Content (percent)
Nitrogen (N)	5–7
Phosphoric acid (P)	1–5
Water soluble potash (K)	1–10

20-3.01B(5) Root Stimulants

Root stimulant must be a commercial quality product.

20-3.01B(6) Plaster Sand

Backfill material for the transplant palm tree planting holes must be 100 percent commercial quality washed plaster sand.

20-3.01B(7) Root Barrier

Root barrier must be an injection molded or extruded modular panel made of high-density polypropylene or polyethylene plastic.

Each panel must:

1. Be at least 1/16-inch thick
2. Have at least 4 molded root-deflecting vertical ribs 0.5- to 0.8-inch wide, 6 to 8 inches apart
3. Have a locking strip or an integral male-female sliding lock designed to resist slippage between panels
4. Be at least 2 feet wide and 2 feet in depth

20-3.01B(8) Root Protectors

Each root protector must be:

1. Fabricated from 1-inch, hexagonal pattern, 20-gauge mesh wire
2. Closed bottom design with a height and diameter that provides a minimum of 6 inches of clearance between the root ball and the sides and bottom of the wire cylinder

Wire edges at the top of the cylinder must be the uncut manufactured finished edge free of sharp points.

20-3.01B(9) Foliage Protectors

Each foliage protector must be:

1. Fabricated from 1-inch, hexagonal pattern, 20-gauge mesh wire
2. Approximately 4 feet high and 2 feet in diameter

Wire edges at the top of the cylinder must be the uncut manufactured finished edge free of sharp points. Other wire edges that are cut must be free of sharp points.

Support stakes must be one of the following:

1. 3/4-inch reinforcing steel bar a minimum of 5 feet long with an orange or red plastic safety cap that fits snugly onto the top of the reinforcing steel bar
2. 2 inch nominal diameter or 2 by 2 inch nominal size wood stakes a minimum of 5 feet long. Wood stakes must be straight

The jute mesh cover must comply with section 21-1.02O(2). Twine required to hold the jute mesh cover in place must be 1/8-inch diameter manila hemp twine.

20-3.01B(10) Wood Plant Stakes

Each plant stake must be nominal 2 by 2 inch or nominal 2-inch diameter and of sufficient length to keep the plant in an upright position.

Plant stakes for vines must be nominal 1 by 1 inch,18 inches long.

20-3.01B(11) Plant Ties

Plant ties must be extruded vinyl-based tape, 1 inch wide and at least 10 mils thick.

20-3.01C Construction

20-3.01C(1) General

Apply a root stimulant under the manufacturer's instructions to the plants specified in the special provisions.

Before transporting the plants to the planting area, thoroughly wet the root ball.

20-3.01C(2) Pruning

Prune plants under the latest edition of ANSI A300 part 1, *Pruning*, published by the Tree Care Industry Association.

Do not use tree seal compounds to cover pruning cuts.

20-3.01C(3) Watering

Water existing plants to be maintained, transplanted trees, and new plants as needed to keep the plants in a healthy growing condition.

20-3.01C(4) Replacement Plants

Plants that show signs of failure to grow at any time or are so injured or damaged as to render them unsuitable for the purpose intended, must be removed, replaced, and replanted. Replace unsuitable plants within 2 weeks after the Engineer marks or indicates that the plants must be replaced.

Replacement planting must comply with the original planting requirements, spacing, and size provisions described for the plants being replaced.

Replacement planting for transplanted trees must comply with the work plan and be planted in the same planting hole.

Replacement ground cover plants must be the same species specified for the ground cover being replaced. Other replacement plants must be the same species as the plants being replaced.

Place orders for replacement plants with the vendor at the appropriate time so that the replacement plants are not in a root-bound condition.

The Department does not pay for replacement plants or the planting of replacement plants.

20-3.01C(5) Maintain Plants

Maintain plants from the time of planting until Contract acceptance if no plant establishment period is specified or until the start of the plant establishment period.

20-3.01D Payment

Reserved

20-3.02 EXISTING PLANTING

20-3.02A General

20-3.02A(1) Summary

Section 20-3.02 includes specifications for pruning existing plants, transplanting trees, and maintaining existing planted areas.

Transplant palm trees between March 15 and October 15.

20-3.02A(2) Definitions

Reserved

20-3.02A(3) Submittals

Submit a work plan for:

1. Transplanting trees. The work plan must include methods for lifting, transporting, storing, planting, guying, and maintaining each tree to be transplanted. Include root ball size, method of root ball containment, and a maintenance program for each tree.
2. Maintaining existing planted areas. The work plan must include weed control, fertilization, mowing and trimming of turf areas, watering, and controlling rodents and pests.

Submit a copy of the manufacturer's product sheet for root stimulant including application instructions.

20-3.02A(4) Quality Control and Assurance

Inspect for deficiencies of existing planted areas in the presence of the Engineer. Complete the inspection within 15 days after the start of job site activities.

Deficiencies requiring corrective action include:

1. Weeds
2. Dead, diseased, or unhealthy plants
3. Missing plant stakes and tree ties
4. Inadequate plant basins and basin mulch
5. Other deficiencies needing corrective action to promote healthy plant life
6. Rodents and pests

20-3.02B Materials

Not Used

20-3.02C Construction

20-3.02C(1) General

Correct deficiencies of existing planted areas as ordered within 15 days of the order. Correction of deficiencies is change order work.

After deficiencies are corrected, perform work to maintain existing planted areas in a neat and presentable condition and to promote healthy plant growth through Contract acceptance.

20-3.02C(2) Prune Existing Plants

Prune existing plants as shown.

If no bid item for prune existing plants is included, prune existing plants as ordered. Pruning existing plants is change order work.

20-3.02C(3) Transplant Trees

Prune each tree to be transplanted immediately before lifting.

If the tree to be transplanted is a palm, prune by removing dead fronds and frond stubs from the trunk. Remove green fronds up to 2 rows of fronds away from the center of growth. Tie the remaining 2 rows of fronds in an upright position with light hemp or manila rope. Remove fronds and frond stubs at the trunk in a manner that will not injure the trunk. Remove fronds and frond stubs for *Phoenix dactylifera* (Date Palm) approximately 4 inches from the trunk.

Prepare each hole in the new location before lifting the tree to be transplanted.

Lift tree to be transplanted as described in the work plan.

Comply with section 20-3.03C(3) for handling and planting each tree to be transplanted.

Until replanted, cover exposed root ball with wet burlap or canvas and cover the crown with 90 percent shade cloth.

Replant each tree on the same day it is lifted if possible. If the transplant location is not ready to receive the tree, store and maintain the tree to be transplanted until the transplant location is authorized. Store tree in an upright position.

Replace damaged transplanted tree under 20-3.01C(4) and with the number of trees specified in the special provisions.

The replacement trees must be planted in individual plant holes at the location determined by the Engineer within the area of the tree being replaced. Comply with section 20-3.03C(2) for the planting of the replacement trees.

20-3.02C(4) Maintain Existing Planted Areas

If a bid item for maintain existing planted areas is included, the existing plant basins must be kept well-formed and free of sediment. If the existing plant basins need repairs, and the basins contain mulch, replace the mulch after the repairs are done.

Control weeds within the existing planted area and:

1. From the existing planted area limit to the adjacent edges of paving and fences if less than or equal to 12 feet
2. From the existing planted area limit to 6 feet beyond the outer limit of the existing planted area if the adjacent edge of paving or fence is more than 12 feet away
3. Within a 3-foot radius from each existing tree and shrub

If no bid item for maintain existing planted areas is included, maintain existing planted areas as ordered. Maintain existing planted areas is change order work.

20-3.02D Payment

Not Used

20-3.03 PLANTING WORK

20-3.03A General

Section 20-3.03 includes specifications for planting plants.

20-3.03B Materials

Not Used

20-3.03C Construction

20-3.03C(1) General

Do not begin planting until authorized.

If an irrigation system is required, do not begin planting in an area until the functional test has been completed and authorized for the irrigation system serving that area.

20-3.03C(2) Preparing Planting Areas

The location of each plant is as shown unless the Engineer designates otherwise. If the Engineer designates the location, it will be marked by a stake, flag, or other marker.

Conduct work so the existing flow line in drainage ditches is maintained. Material displaced by your operations that interferes with drainage must be removed.

Where a minimum distance to a drainage ditch is shown, locate the plant so that the outer edge of its basin wall is at least the minimum distance shown for each plant involved.

Excavate each planting hole by hand digging or by drilling. The bottom of each planting hole must be flat. Do not use water for excavating the hole.

Unless a larger planting hole is specified, the planting hole must be large enough to receive the root ball or the total length and width of roots, backfill, amendments, and fertilizer. Where rock or other hard material prohibits the hole from being excavated, a new hole must be excavated and the abandoned hole backfilled.

20-3.03C(3) Planting Plants

20-3.03C(3)(a) General

Do not plant plants in soil that is too wet, too dry, not properly conditioned as specified, or in an unsatisfactory condition for planting.

Do not distribute more plants than can be planted and watered on that day.

Water plants immediately after planting. Apply water until the backfill soil around and below the roots or ball of earth around the roots of each plant is thoroughly saturated. When watering with a hose, use a nozzle, water disbursement device, or pressure reducing device. Do not allow the full force of the water from the open end of the hose to fall within the basin around any plant. Groundcover plants in areas with an irrigation system must be watered by sprinklers. Several consecutive watering cycles may be necessary to thoroughly saturate the soil.

If shown, install root barriers between trees and concrete sidewalk or curb. Install panels flush with finished grade and join with locking strips or integral male-female sliding locks. Install barriers with root deflectors facing inward.

If a tree grate is shown, install root barrier panels 0.5 inch above finish grade or as shown.

Adjust planting locations so that each tree or shrub is at least 8 feet away from any sprinkler.

Where a tree, shrub, or vine is to be planted within a groundcover area or cutting planting area, plant it before planting groundcover or cuttings.

Where shrubs and groundcovers are shown to be planted in groups, the outer rows directly adjacent to the nearest roadway or highway fence must be parallel to the nearest roadway or highway fence. Stagger shrubs and groundcovers in adjacent rows. Adjust the alignment of the plants within the outer rows.

Core holes in concrete masonry block wall as shown.

Where a vine is to be planted against a wall or fence, plant it as close as possible to the wall or fence. If a vine planted next to a wall is to be staked, stake and tie the vine at the time of planting. A vine planted next to a fence must be tied to the fence at the time of planting.

Protect tree trunks from injury. Do not:

1. Drag tree
2. Use chains to move a tree
3. Lay tree on the ground

20-3.03C(3)(b) Trees, Shrubs, and Vines

After preparing holes, thoroughly mix soil amendment and granular fertilizer at the rate shown with native soil to be used as backfill material. Remove containers from plants in such a manner that the ball of earth surrounding the roots is not broken. Do not cut plant containers before delivery of the plants to the planting area. Plant and water plants immediately after removal from their containers.

Place packet fertilizer in the backfill within 6 to 8 inches of the ground surface and approximately 1 inch from the root ball. If more than 1 packet is required per plant, distribute the packets evenly around the root ball.

If a root stimulant is to be used, apply it according to the manufacturer's instructions.

If required, install root protectors in the plant holes as shown.

Ensure roots are not restricted or distorted.

Distribute backfill uniformly throughout the entire depth of the plant hole without clods or lumps. After the planting holes have been backfilled, jet water into the backfill with a pipe or tube inserted into the bottom of the hole until the backfill material is saturated for the full depth. If the backfill material settles below this level, add additional backfill to the required level. If a plant settles deeper than shown, replant it at the required level.

Remove nursery stakes after planting.

Install 2 plant stakes for each plant to be staked at the time of planting as shown. Ensure the rootball is not damaged.

Tie the plant to the stakes with 2 plant ties, 1 tie to each stake. Each tie must form a figure 8 by crossing the tie between the plant and the stake as shown. Install ties at the lowest position that will support the plant in an upright position. Ties must provide trunk flexibility but not allow the trunk to rub against the stakes. Wrap each end of the tie 1-1/2 turns around the stake and securely tie.

Construct a watering basin around each plant as shown.

If required, install a foliage protector:

1. Over the plant within 2 days after planting.
2. Vertically and centered over the plant as shown

If foliage protectors are required:

1. Cut the bottom of the wire cylinder to match the slope of the ground. Do not leave sharp points of wire after cutting. Sharp points must be bent over or blunted.
2. Install 2 support stakes for foliage protectors vertically and embed in the soil on opposite sides of the plant as shown and in a transverse direction to the prevailing wind.
3. Either weave the support stakes through the wire cylinder mesh at 6 inch maximum centers or fasten the wire cylinder to the support stakes at 6 inch maximum centers.
4. Wire cylinder must be snug against the support stakes but loose enough to be raised for pesticide application or to perform weeding within the plant basin.
5. Install jute mesh cover over the foliage protector and secure with twine as shown.

20-3.03C(3)(c) Groundcover Plants

Each groundcover planting area irrigated by a single control valve must be completely planted and watered before planting other groundcover planting areas.

Plant groundcover plants in moist soil, and in neat, straight rows, spaced as shown.

Apply fertilizer to groundcover plants and water into the soil immediately after planting.

20-3.03C(3)(d) Cuttings, Liners, Plugs, and Seedling Plants

20-3.03C(3)(d)(i) General

Apply fertilizer to cuttings, liners, plugs, and seedling plants and water immediately after planting.

Ensure the soil is moist to a minimum depth of 8 inches before planting cuttings.

If a root stimulant is to be used, apply it according to the manufacturer's instructions.

20-3.03C(3)(d)(ii) Willow Cuttings

Unless otherwise shown, for willow cuttings excavate planting holes perpendicular to the ground line by using a steel bar, auger, post hole digger, or similar tools. Holes must be large enough to receive the cuttings and fertilizer packet. Plant willow cuttings to the specified depths without damaging the bark.

Where rock or other hard material prohibits the excavation of the planting holes, excavate new holes and backfill the unused holes.

Plant willow cuttings during the period specified in the special provisions.

Apply root stimulant according to the manufacturer's instructions.

Plant the base of the cutting 10 to 12 inches deep with 3 to 5 bud scars exposed above the ground. If more than 5 bud scars are exposed, trim off the excess willow cutting length.

Place 1 fertilizer packet in the backfill of each cutting, 6 to 8 inches below the ground surface and approximately 1 inch from the cutting.

Backfill the plant holes with excavated material after planting. Distribute the excavated material evenly within the hole without clods, lumps, or air pockets. Compact the backfill so that the cutting cannot be easily removed from the soil. Do not damage the cutting's bark.

Dispose of trimmings and unused cuttings.

20-3.03C(3)(d)(iii) Cottonwood Cuttings

Reserved

20-3.03C(3)(d)(iv) *Carpobrotus* and *Delosperma* Cuttings

Plant *Carpobrotus* cuttings to a depth so that not less than 2 nodes are covered with soil. The basal end of *Delosperma* cuttings must not be less than 2 inches below the surface of the soil and the basal end of *Carpobrotus* cuttings must not be less than 4 inches below the surface of the soil.

Apply root stimulant to *Delosperma* cuttings before planting.

Do not plant *Carpobrotus* or *Delosperma* cuttings in soil that does not contain sufficient moisture at an average depth of 2 inches below the surface.

20-3.03C(3)(d)(v) Liner Plants

Plant liner plants during the period specified in the special provisions.

If a foliage protector is required, install under section 20-3.03C(3)(b).

20-3.03C(3)(d)(vi) Plug Plants

Plant plug plants during the period specified in the special provisions.

20-3.03C(3)(d)(vii) Seedling Plants

Plant seedling plants during the period specified in the special provisions.

20-3.03C(3)(e) Sod

After all other planting is performed, grade sod areas to drain and to a smooth and uniform surface. Fine grade and roll sod areas before placing sod.

Areas adjacent to sidewalks, edging, and other paved borders and surfaced areas must be 1 inch below the finished surface elevation of the facilities, after fine grading, rolling, and settlement of the soil.

Place sod such that the end of each adjacent strip is staggered a minimum of 2 feet. Place the edge and end of sod firmly against adjacent sod and against sidewalks, edging, and other paved borders and surfaced areas.

Lightly roll the entire sodded area to eliminate air pockets and ensure close contact with the soil after placement of sod. Water the sodded areas so that the soil is moist to a minimum depth of 4 inches after rolling. Do not allow the sod to dry out.

If irregular or uneven areas appear in the sodded areas, restore to a smooth and even appearance.

Trim sod to a uniform edge at sidewalks, edging, and other paved borders and surfaced areas. Trimming must be repeated whenever the edge of sod extends 1 inch beyond the edge of the edging, sidewalks, and other paved borders and surfaced areas. Remove and dispose of trimmed sod.

Mow sod when it has reached a height of 4 inches. Mow sod to a height of 2.5 inches.

20-3.03D Payment

Soil amendment is measured in the vehicle at the point of delivery.

Measurement for slow-release fertilizer, organic fertilizer, or iron sulfate is determined from marked weight or sack count.

Various sizes and types of plants are measured by either the product of the average plant density and the total area planted or by actual count of the living plants in place, determined by the Engineer. The average plant density is the number of living plants per sq yd determined from actual count of test areas chosen representing the total planted area. The size and location of the test areas is determined by you and the Engineer, except that the total area tested must be equal to not less than 3 percent nor more than 5 percent of the planted area being determined. The Engineer makes the final determination of the areas to be tested.

20-3.04–20-3.08 RESERVED

20-4 PLANT ESTABLISHMENT WORK

20-4.01 GENERAL

20-4.01A Summary

Section 20-4 includes specifications for performing plant establishment work.

Plant establishment consists of caring for the plants, including watering, fertilizing, pruning, replacing damaged plants, pest control, and operating and repairing of all existing irrigation facilities used and irrigation facilities installed as part of the new irrigation system.

Working days on which no work is required, as determined by the Engineer, will be credited as a plant establishment working day, regardless of whether or not you perform plant establishment work.

Working days whenever you fail to adequately perform plant establishment work will not be credited toward the plant establishment working days.

20-4.01B Definitions

Type 1 plant establishment: Plant establishment period with the number of working days specified for plant establishment beginning after all work has been completed except for plant establishment work and other bid items specified to be performed until Contract acceptance.

Type 2 plant establishment: Plant establishment period with the number of working days specified for plant establishment beginning after all planting work has been completed except for plant establishment work and other bid items specified to be performed until Contract acceptance, provided that the Contract must not be accepted unless the plant establishment work has been satisfactorily performed for at least the number of working days specified for plant establishment.

If maintenance and protection relief is granted for a completed portion of the work under section 5-1.38, Type 2 plant establishment period for the completed portion of the work is the time between

completion of all planting work except for plant establishment work, and the granting of maintenance and protection relief, provided that the relief must not be granted unless the plant establishment work in the completed portion of the work has been satisfactorily performed for at least the number of working days specified for the plant establishment period.

20-4.01C Submittals

20-4.01C(1) General

Submit seasonal watering schedules for use during the plant establishment period within 10 days after the start of the plant establishment period. Remote irrigation control system watering schedule must utilize the remote irrigation control system software program.

Submit updated watering schedules within 5 business days after any changes have been made to the authorized schedules.

Submit a revised watering schedule for each irrigation controller not less than 30 days before completion of the plant establishment period.

20-4.01C(2) Notification

The Engineer will notify you in writing when the plant establishment period begins and will furnish statements regarding the number of working days credited to the plant establishment period after the notification.

Notify the Engineer at least 5 business days before applying each application of fertilizer.

20-4.01D Quality Control and Assurance

Provide training by a qualified person on the use and adjustment of the irrigation controllers installed, 30 days before completion of the plant establishment period.

Perform a final inspection of the plant establishment work in the presence of the Engineer between 20 and 30 days before Contract acceptance.

20-4.02 MATERIALS

20-4.02A General

Reserved

20-4.02B Fertilizers

Fertilizer must comply with section 20-3.01B(5).

20-4.03 CONSTRUCTION

20-4.03A General

Remove trash and debris.

Surplus earth accumulated in roadside clearing and planting areas must be removed.

Trim and mow turf areas as specified for sod in section 20-3.03C(3)(e). Dispose of trimmed and mowed material.

If irregular or uneven areas appear within turf areas, restore to a smooth and even appearance. Reseed turf seed areas.

Remove the tops of foliage protectors if plants become restricted.

Remove foliage protectors, including support stakes, within 30 days before the completion of the plant establishment period.

Keep plant basin walls well formed.

Clean new wye strainers and existing wye strainers that are a part of the new irrigation system annually until the completion of the plant establishment period. The last cleaning must be done within 15 days before the completion of the plant establishment period.

Remove, clean, and reinstall new filters and existing filters that are a part of the new irrigation system annually until the completion of the plant establishment period. The last cleaning must be done within 15 days before the completion of the plant establishment period.

20-4.03B Plant Growth Control

Prune plants planted as part of the Contract as authorized.

Remove plant growth that extends within 2 feet of sidewalks, curbs, dikes, shoulders, walls or fences.

Remove proposed and existing ground cover from within the plant basins, including basin walls, turf areas, and planting areas within edging.

Vines next to walls and fences must be kept staked and tied. Train vines on fences and walls or through cored holes in walls.

20-4.03C Fertilizers

Apply fertilizer to the plants as specified and water into the soil after each application.

Apply fertilizer at the rates shown and spread with a mechanical spreader, whenever possible.

20-4.03D Weed Control

Control weeds under section 20-1.03C(3).

20-4.03E Plant Staking

Replace the plant stakes that are inadequate to support plants with larger stakes.

Remove plant stakes when the Engineer determines they are no longer needed.

20-4.03F Replacement Plants

Replacement plants must comply with section 20-3.01C(4).

Replacement of plants up to and including the 125th plant establishment working day must be with a plant of the same size as originally specified. Plants of a larger container size than those originally specified for replacement plants may be used during the first 125 working days of the plant establishment period.

Replacement of plants after the 125th plant establishment working day must comply with the following size requirements:

Plant size (Original)	Plant size (Replacement)
Pot/liner/plug/ seedling	No. 1 container
No. 1 container	No. 5 container
No. 5 container	No. 15 container

Other replacement plants must be the same size as originally specified.

Replacement ground cover plants must comply with the following spacing requirements:

Original spacing (inches)	On center spacing of replacement ground cover plants (inches)		
	Number of completed plant establishment working days		
	1–125	126–190	191–End of plant establishment period
9	9	6	6
12	12	9	6
18	18	12	9
24	24	18	12
36	36	24	18

20-4.03G Watering

Operate the electric automatic irrigation systems in the automatic mode unless authorized.

If any component of the electric automatic irrigation system is operated manually, the day will not be credited as a plant establishment working day unless the manual operation is authorized.

Water plants utilizing the remote irrigation control system software program unless authorized.

Implement the watering schedule at least 10 days before completion of the plant establishment period.

20-4.04 PAYMENT

Not Used

20-5 LANDSCAPE ELEMENTS

20-5.01 GENERAL

20-5.01A General

Section 20-5 includes specifications for constructing and installing landscape elements.

20-5.01B Materials

Not Used

20-5.01C Construction

Earthwork must comply with section 19.

20-5.01D Payment

Not Used

20-5.02 EDGING

20-5.02A General

Section 20-5.02 includes specifications for constructing landscape edging.

20-5.02B Materials

20-5.02B(1) General

Reserved

20-5.02B(2) Header Board Edging

Lumber for header board edging must be one of the following types:

1. Construction grade cedar
2. Pressure-treated Douglas fir
3. Construction heart grade redwood complying with section 57-2.01B(2)

Lumber must be:

1. Rough cut from sound timber.
2. Straight. Sweep must not exceed 1 inch in 6 feet.
3. Free from loose or unsound knots. Knots must be sound, tight, well spaced, and not to exceed 2 inches in size on any face.
4. Free of shakes in excess of 1/3 the thickness of the lumber.
5. Free of splits longer than the thickness of the lumber.
6. Free of other defects that would render the lumber unfit structurally for the purpose intended.

Edging anchors for header board edging must be stakes of the size and shape shown.

20-5.02B(3) Metal Edging

Metal edging must be commercial quality, made of aluminum or steel, and have an L-shaped design. Edging must be a minimum of 4 inches in height. The thickness must be as recommended by the manufacturer for the use intended.

Edging anchors must be from the same manufacturer as the metal edging.

20-5.02B(4) High Density Polyethylene Edging

HDPE edging must be commercial quality and a minimum of 4 inches in height. The thickness must be as recommended by the manufacturer for commercial installation for the use intended.

Edging anchors must be from the same manufacturer as HDPE edging.

20-5.02B(5) Concrete Edging

Concrete for edging must be minor concrete.

20-5.02B(6)–20-5.02B(10) Reserved

20-5.02C Construction

20-5.02C(1) General

Where edging is used to delineate the limits of inert ground cover or mulch areas, install edging before installing inert ground cover or mulch areas.

Saw cut surfaces where (1) asphalt concrete or concrete surfacing must be removed to permit the installation of edging and (2) no joint exists between the surfacing to be removed and the surfacing to remain in place. The surfacing must be cut in a straight line to a minimum depth of 2 inches with a power-driven saw before the surfacing is removed. Spike or stake spacing must comply with the manufacturer's instructions for use and site conditions.

20-5.02C(2) Header Board Edging

Each stake must be driven flush with the top edge of the header board edging and the stake top must be beveled away from the header board at a 45 degree angle. Attach stake to header board with a minimum of two 12-penny hot dipped galvanized nails per stake.

20-5.02C(3) Metal and High Density Polyethylene Edging

Spike or stake spacing must comply with the manufacturer's instructions for use and site conditions.

20-5.02C(4) Concrete Edging

Construct and finish minor concrete edging under section 73-2.

20-5.02C(5)–20-5.02C(9) Reserved

20-5.02D Payment

Edging is measured parallel to the ground surface.

20-5.03 INERT GROUND COVERS AND MULCHES

20-5.03A General

20-5.03A(1) General

20-5.03A(1)(a) Summary

Section 20-5.03 includes specifications for installing inert ground covers and mulches.

20-5.03A(1)(b) Definitions

Reserved

20-5.03A(1)(c) Submittals

Submit:

1. Filter fabric product data including the manufacturer's product sheet and installation instructions
2. Certificate of compliance for filter fabric at least 5 business days before delivery of the material to the job site

20-5.03A(1)(d) Quality Control and Assurance

Reserved

20-5.03A(2) Materials

Soil sterilant must be oxadiazon granular preemergent and must comply with section 20-1.02C.

Filter fabric must be Class A. Staples for filter fabric must comply with section 21-1.02R.

20-5.03A(3) Construction

20-5.03A(3)(a) General

Before performing inert ground cover and mulch work, remove plants and weeds to ground level.

20-5.03A(3)(b) Earthwork

Excavate areas to receive inert ground cover or mulch to the depth shown. Maintain the planned flow lines, slope gradients, and contours of the job site. Grade subgrade to a smooth and uniform surface and compact to not less than 90 percent relative compaction.

20-5.03A(3)(c) Treatment of Soil

After compaction, apply soil sterilant at the maximum label rate. Do not apply soil sterilant more than 12 inches beyond the inert ground cover or mulch limits. The soil sterilant application and inert ground cover or mulch placement must be completed within the same work day.

20-5.03A(3)(d) Filter Fabric

Immediately before placing filter fabric, surfaces to receive filter fabric must be free of loose or extraneous material and sharp objects that may damage the filter fabric during installation.

Align fabric and place in a wrinkle-free manner.

Overlap adjacent rolls of the fabric from 12 to 18 inches. Spread each overlapping roll in the same direction. Fasten fabric with staples flush with the adjacent fabric to prevent movement of fabric by placement of inert ground cover or mulch.

Repair or replace fabric damaged during placement of inert ground cover or mulch with sufficient fabric to comply with overlap requirements.

20-5.03A(4) Payment

Not Used

20-5.03B Rock Blanket

20-5.03B(1) General

20-5.03B(1)(a) Summary

Section 20-5.03B includes specifications for placing rock blanket.

20-5.03B(1)(b) Definitions

Reserved

20-5.03B(1)(c) Submittals

Submit a 1 sq yd sample of the various rock sizes.

20-5.03B(1)(d) Quality Control and Assurance

Reserved

20-5.03B(2) Materials

20-5.03B(2)(a) General

Do not use filter fabric.

20-5.03B(2)(b) Concrete

Concrete must be minor concrete.

20-5.03B(2)(c) Rock

Rock must be clean, smooth, and obtained from a single source and must comply with the following grading requirements:

Grading Requirements

Screen size (inches)	Percentage passing
8	100
6	50-85
4	0-50

20-5.03B(2)(d) Mortar

Mortar must comply with section 51-1.02F.

20-5.03B(3) Construction

Place concrete as shown.

Rock must be placed while concrete is still plastic. Remove concrete adhering to the exposed surfaces of the rock.

Loose rocks or rocks with a gap greater than 3/8 inch must be reset by an authorized method. The rock gap is measured from the edge of the rock to the surrounding concrete bedding.

Place mortar as shown.

20-5.03B(4) Payment

Rock blanket is measured parallel to the rock blanket surface.

20-5.03C Gravel Mulch

20-5.03C(1) General

20-5.03C(1)(a) Summary

Section 20-5.03C includes specifications for placing gravel mulch.

20-5.03C(1)(b) Definitions

Reserved

20-5.03C(1)(c) Submittals

Submit a 5-lb sample of the gravel mulch.

20-5.03C(1)(d) Quality Control and Assurance

Reserved

20-5.03C(2) Materials

Gravel mulch must be:

1. Uniform gray color
2. From a single source only
3. Crushed rock that complies with the following grading requirements:

Grading Requirements

Sieve size	Percent passing
1-1/4 inch	100
3/4 inch	60-80
1/2 inch	45-65
No. 40	5-20

20-5.03C(3) Construction

Place gravel and compact by rolling.

The finished gravel mulch surface must be smooth and uniform, maintaining original flow lines, slope gradients, and contours of the job site.

20-5.03C(4) Payment

Gravel mulch is measured parallel to the gravel mulch surface.

20-5.03D Decomposed Granite

20-5.03D(1) General

20-5.03D(1)(a) Summary

Section 20-5.03D includes specifications for placing decomposed granite.

20-5.03D(1)(b) Definitions

Reserved

20-5.03D(1)(c) Submittals

Five business days before delivery of the materials to the job site, submit:

1. Solidifying emulsion product data including the manufacturers' product sheets and installation instructions
2. Certificate of compliance for solidifying emulsion
3. 5-lb sample of the decomposed granite

20-5.03D(1)(d) Quality Control and Assurance

Test plot must be:

1. Constructed at an authorized location
2. At least 3 by 12 feet
3. Constructed using the materials, equipment, and methods to be used in the work
4. Authorized before starting work

Notify the Engineer not less than 7 days before constructing the test plot.

The Engineer uses the authorized test plot to determine acceptability of the work.

If ordered, prepare additional test plots. Additional test plots are change order work.

If the test plot is not incorporated into the work, the Engineer may order you to remove it.

20-5.03D(2) Materials

20-5.03D(2)(a) General

Decomposed granite must be:

1. Uniform gray or tan color
2. From one source only
3. Crushed granite rock that complies with grading requirements shown in the following table:

Grading Requirements

Sieve size	Percent passing
3/8 inch	100
No. 4	95–100
No. 8	75–80
No. 16	55–65
No. 30	40–50
No. 50	25–35
No. 100	20–25
No. 200	5–15

Note:
Grading based upon AASHTO T11-82 and T27-82

20-5.03D(2)(b) Solidifying Emulsion

Solidifying emulsion must be either a water-based polymer or nontoxic organic powdered binder specifically manufactured to harden decomposed granite. The solidifying emulsion must not alter the decomposed granite color.

20-5.03D(3) Construction

Do not place decomposed granite during rainy conditions.

Mix solidifying emulsion thoroughly and uniformly throughout the decomposed granite and under the manufacturer's instructions. Mix the material in the field using portable mixing equipment, or delivered in mixer trucks from a local ready-mixed plant.

Place decomposed granite uniformly in layers no more than 1-1/2 inch thick. Compact each layer of decomposed granite to a relative compaction of not less than 90 percent. Begin compaction within 6 to 48 hours of placement.

If the material was mixed in the field, apply an application of solidifying emulsion after compaction as recommended by the manufacturer. Prevent runoff or overspray of solidifying emulsion onto adjacent paved or planting areas.

The finished decomposed granite surface must be smooth and uniform, compacted to a relative compaction of not less than 90 percent, maintaining original flow lines, slope gradients, and contours of the job site.

20-5.03D(4) Payment

Not Used

20-5.03E Wood Mulch

20-5.03E(1) General

20-5.03E(1)(a) Summary

Section 20-5.03E includes specifications for placing wood mulch.

20-5.03E(1)(b) Definitions

Reserved

20-5.03E(1)(c) Submittals

Submit a certificate of compliance for mulch.

Submit a 2 cu ft mulch sample with the mulch source listed on the bag and obtain approval before delivery of mulch to the job site.

20-5.03E(1)(d) Quality Control and Assurance

Reserved

20-5.03E(2) Materials

20-5.03E(2)(a) General

Mulch must not contain more than 0.1 percent of deleterious materials such as rocks, glass, plastics, metals, clods, weeds, weed seeds, coarse objects, sticks larger than the specified particle size, salts, paint, petroleum products, pesticides or other chemical residues harmful to plant or animal life.

Do not use filter fabric.

20-5.03E(2)(b) Tree Bark Mulch

Tree bark mulch must be derived from cedar, Douglas fir, or redwood species.

Tree bark mulch must be ground so that at least 95 percent of the material by volume is less than 2 inches and no more than 30 percent by volume is less than 1 inch.

20-5.03E(2)(c) Wood Chip Mulch

Wood chip mulch must:

1. Be derived from clean wood
2. Not contain leaves or small twigs
3. Contain at least 95 percent wood chips by volume with average thickness of 1/16 to 3/8 inch in any direction and 1/2 to 3 inches in length

20-5.03E(2)(d) Shredded Bark Mulch

Shredded bark mulch must:

1. Be derived from trees
2. Be a blend of loose, long, thin wood, or bark pieces
3. Contain at least 95 percent wood strands by volume with average thickness of 1/8 to 1-1/2 inches in any direction and 2 to 8 inches in length

20-5.03E(2)(e) Tree Trimming Mulch

Tree trimming mulch must:

1. Be derived from chipped trees and may contain leaves and small twigs.
2. Contain at least 95 percent material by volume less than 3 inches and no more than 30 percent by volume less than 1 inch

20-5.03E(2)(f)–20-5.03E(2)(j) Reserved

20-5.03E(3) Construction

Spread mulch placed in areas outside of plant basins to a uniform thickness as shown.

Mulch must be placed at the rate described and placed in the plant basins or spread in areas as shown after the plants have been planted. Mulch placed in plant basins must not come in contact with the plant crown and stem.

Spread mulch from the outside edge of the proposed plant basin or plant without basin to the adjacent edges of shoulders, paving, retaining walls, dikes, edging, curbs, sidewalks, walls, fences, and existing plantings. If the proposed plant or plant without basin is 12 feet or more from the adjacent edges of shoulders, paving, retaining walls, dikes, edging, curbs, sidewalks, walls, fences, and existing plantings, spread the mulch 6 feet beyond the outside edge of the proposed plant basin or plant without basin.

Do not place mulch within 4 feet of:

1. Flow line of earthen drainage ditches
2. Edge of paved ditches
3. Drainage flow lines

20-5.03E(4) Payment

Mulch is measured in the vehicle at the point of delivery.

20-5.03F–20-5.03J Reserved

20-5.04 RESERVED

Reserved

20-5.05 SITE FURNISHINGS

20-5.05A General

Section 20-5.05 includes specifications for installing site furnishings.

20-5.05B–20-5.05Z Reserved

20-5.06–20-5.10 RESERVED

^^

21 EROSION CONTROL

07-19-13

Replace ", bonded fiber matrix, and polymer-stabilized fiber matrix" in the 1st paragraph of section 21-1.01B with:

04-20-12

and bonded fiber matrix

04-20-12

Delete the last paragraph of section 21-1.02E.

Replace section 21-1.02F(2) with:

04-20-12

21-1.02F(2) Reserved

Replace "20-7.02D(1)" in the 1st paragraph of section 21-1.02H with:

07-19-13

20-3.01B(4)

Replace section 21-1.02J with:

04-20-12

21-1.02J Reserved

Replace the row for organic matter content in the table in the 4th paragraph of section 21-1.02M with:

01-18-13

Organic matter content	TMECC 05.07-A Loss-on-ignition organic matter method (LOI) % dry weight basis	30–100

Replace the paragraph in section 21-1.02P with:

10-19-12

Fiber roll must be a premanufactured roll filled with rice or wheat straw, wood excelsior, or coconut fiber. Fiber roll must be covered with biodegradable jute, sisal, or coir fiber netting secured tightly at each end and must be one of the following:

1. 8 to 10 inches in diameter and at least 1.1 lb/ft

2. 10 to 12 inches in diameter and at least 3 lb/ft

Fiber roll must have a minimum functional longevity of 1 year.

Add between the 1st and 2nd paragraphs of section 21-1.03A:

01-18-13

Remove and dispose of trash, debris, and weeds in areas to receive erosion control materials.

Remove and dispose of loose rocks larger than 2-1/2 inches in maximum dimension unless otherwise authorized.

Protect the traveled way, sidewalks, lined drainage channels, and existing vegetation from overspray of hydraulically-applied material.

Replace section 21-1.03B with:

01-18-13

21-1.03B Reserved

Replace "3 passes" in item 2 in the list in the 2nd paragraph of section 21-1.03G with:

04-19-13

2 passes

Replace section 21-1.03I with:

04-20-12

21-1.03I Reserved

Add between the 4th and 5th paragraphs of section 21-1.03P:

10-19-12

If soil conditions do not permit driving the stakes into the soil, drill pilot holes to facilitate driving of the stakes.

01-18-13

Delete the 1st and 2nd sentences of the 3rd paragraph in section 21-1.04.

^^

28 CONCRETE BASES

11-15-13

Replace "Reserved" in section 28-1 with:

07-19-13

Section 28 includes specifications for constructing new concrete base and replacing existing base.

Replace section 28-2 with:

07-19-13

28-2 LEAN CONCRETE BASE

28-2.01 GENERAL

28-2.01A Summary

Section 28-2 includes specifications for constructing lean concrete base (LCB).

28-2.01B Definitions

coarse aggregate: Aggregate retained on a no. 4 sieve.

fine aggregate: Aggregate passing a no. 4 sieve.

28-2.01C Submittals

28-2.01C(1) General

At least 25 days before field qualification, submit the name of your proposed testing laboratory.

At least 10 days before field qualification, submit:

1. Aggregate qualification test results
2. Proposed aggregate gradation
3. Mix design, including:
   3.1. Proportions
   3.2. Types and amounts of chemical admixtures
4. Optional notice stating intent to produce LCB qualifying for a transverse contraction joint waiver under section 28-2.03D

Submittals for cementitious material must comply with section 90-1.01C(3).

Submit QC test results within 24 hours of test completion.

28-2.01C(2) Field Qualification

11-15-13

For each field qualification for each mix design, manufacture 12 specimens under ASTM C 31 and submit six of the specimens from 24 to 72 hours after manufacture. Use one batch for all 12 specimens.

07-19-13

Submit field qualification data and test reports including:

1. Mixing date
2. Mixing equipment and procedures used
3. Batch volume in cu yd, the minimum is 5 cu yd
4. Type and source of ingredients used
5. Age and strength from compression strength results

Field qualification test reports must be signed by the official in responsible charge of the laboratory performing the tests.

28-2.01D Quality Control and Assurance

28-2.01D(1) General

Stop LCB activities and immediately notify the Engineer whenever:

1. Any quality control or acceptance test result does not comply with the specifications
2. Visual inspection shows noncompliant LCB

If LCB activities are stopped, before resuming activities:

1. Inform the Engineer of the adjustments you will make
2. Remedy or replace the noncompliant LCB
3. Obtain authorization

Molds for compressive strength testing under ASTM C 31 or ASTM C 192 must be 6 by 12 inches.

Quality control and assurance for cementitious materials and admixtures must comply with section 90-1.01D(1)

28-2.01D(2) Aggregate Qualification Testing

Qualify the aggregate for each proposed aggregate source and gradation. Qualification tests include (1) sand equivalent and (2) average 7-day compressive strength under ASTM C 39 on 3 specimens manufactured under ASTM C 192. The cement content for this test must be 300 lb/cu yd, and the 7-day

average compressive strength must be at least 610 psi. Cement must be Type II portland cement under section 90-1.02B(2).

LCB must have from 3 to 4 percent air content during aggregate qualification testing.

28-2.01D(3) Field Qualification Testing

Before placing LCB, you must perform field qualification testing and obtain authorization for each mix design. Retest and obtain authorization for changes to authorized mixed designs.

Proposed mix designs must be field qualified before you place the LCB represented by those mix designs. Use an American Concrete Institute (ACI) certified "Concrete Laboratory Technician, Grade I" to perform field qualification tests and calculations.

Notify the Engineer at least 5 days before field qualification. Perform field qualification within the job site or a location authorized by the Engineer.

Field qualification testing includes compressive strength, air content, and penetration or slump in compliance with the table titled "Quality Control Requirements."

Field qualification testing for compressive strength must comply with the following:

1. Manufacture 12 cylinders under ASTM C 31 from a single batch
2. Perform 3 tests; each test consists of determining the average compressive strength of 2 cylinders at 7 days under ASTM C 39
3. The average compressive strength for each test must be at least 530 psi

If you submitted a notice to produce LCB qualifying for a transverse contraction joint waiver, manufacture additional specimens and test LCB for compressive strength at 3 days. Prepare compressive strength cylinders under ASTM C 31 at the same time using the same material and procedures as the 7-day compressive strength cylinders except do not submit 6 additional test cylinders. The average 3-day compressive strength for each test must be not more than 500 psi.

28-2.01D(4) Quality Control Testing

Provide a testing laboratory to perform quality control tests. Maintain sampling and testing equipment in proper working condition. Perform sampling under California Test 125.

Testing laboratories and testing equipment must comply with the Department's Independent Assurance Program.

Perform quality control sampling, testing, and inspection throughout LCB production and placement. LCB must comply with the requirements for the quality characteristics shown in the following table:

Quality Control Requirements

Quality characteristic	Test method	Minimum sampling and testing frequency	Requirement
Sand equivalent (min)	ASTM D 2419	1 per 500 cubic yards but at least 1 per day of production	18
Aggregate gradation	ASTM C 136		Note a
Air content (max, percent) [b]	ASTM C 231		4
Penetration (inches)	ASTM C 360		0 to 1-1/2 nominal [c, d]
Slump (inches)	ASTM C 143		0–3 nominal [c, d]
Compressive strength (min, psi at 7 days)	ASTM C 39 [e]		530
Compressive strength (max, psi at 3 days) [f]	ASTM C 39 [e]		500

[a] Comply with the table titled "Aggregate Grading" in section 28-2.02C.
[b] If no single test in the first 5 air content tests exceeds 1-1/2 percent, no further air content tests are required.
[c] Maximum penetration must not exceed 2 inches and maximum slump must not exceed 4 inches
[d] Test for either penetration or slump
[e] Prepare cylinders under ASTM C 31
[f] Only applicable if you (1) submitted a notice stating intent to produce LCB qualifying for a transverse contraction joint waiver and (2) successfully field qualified the LCB for 3-day compressive strength. Make cylinders at the same time using the same material and procedures as QC testing for 7-day compressive strength.

28-2.01D(5) Acceptance Criteria

For acceptance, properties of LCB must comply with values shown in the following table:

Acceptance Criteria Testing

Property	Test method	Value
Compressive strength (min, psi at 7 days)	ASTM C 39 [a]	530 [b]

[a] Cylinders prepared under ASTM C 31
[b] A compressive strength test represents up to (1) 1,000 cu yd or (2) 1 day's production if less than 1,000 cu yd.

28-2.02 MATERIALS

28-2.02A General

Water must comply with section 90-1.02D.

The air content in LCB must not exceed 4 percent. If the aggregate used for LCB is produced from processed reclaimed asphalt concrete or other material that may cause the air content to exceed 4 percent, reduce the air content with an admixture.

A water-reducing chemical admixture may be used. Water-reducing chemical admixture must comply with ASTM C 494, Type A or Type F.

Air-entraining admixtures must comply with section 90-1.02E.

28-2.02B Cementitious Material

Portland cement must comply with section 90-1.02B. Portland cement content must not exceed 300 lb/cu yd.

SCM must comply with section 90-1.02B except the equations for SCM content under 90-1.02B(3) do not apply.

For aggregate qualification testing, use Type II portland cement under section 90-1.02B(2) without SCM.

28-2.02C Aggregate

Aggregate must be clean and free from decomposed material, organic material, and other deleterious substances. Aggregate samples must not be treated with lime, cement, or chemicals before testing for sand equivalent.

Use either 1-1/2 inch or 1 inch grading. Do not change your selected aggregate grading without authorization.

When tested under ASTM C 136, the percentage composition by weight of the aggregate must comply with the grading requirements for the sieve sizes shown in the following table:

Aggregate Grading

Sieve sizes	Percentage passing			
	1-1/2" maximum		1" maximum	
	Operating range	Contract compliance	Operating range	Contract compliance
2"	100	100	--	--
1-1/2"	90-100	87-100	100	100
1"	--	--	90-100	87-100
3/4"	50-85	45-90	50-100	45-100
3/8"	40-75	35-80	40-75	35-80
No. 4	25-60	20-65	35-60	30-65
No. 30	10-30	6-34	10-30	6-34
No. 200	0-12	0-15	0-12	0-15

Aggregate must comply with the quality requirements shown in the following table:

Aggregate Quality

Property	Test Method	Operating range	Contract compliance
Sand equivalent (min)	ASTM D 2419	21	18
Compressive strength (min, psi at 7 days)	ASTM C 192 ASTM C 39	--	610 at 300 lb/cu yd cement content

Note: Cement must be Type II portland cement under section 90-1.02B(2).

If the aggregate grading or the sand equivalent test results, or both comply with contract compliance requirements but not operating range requirements, you may continue placing LCB for the remainder of the work day. Do not place additional LCB until you demonstrate the LCB to be placed complies with the operating range requirements.

28-2.03 CONSTRUCTION

28-2.03A General

Do not allow traffic or equipment on the LCB for at least 72 hours after the 1st application of the curing compound and completion of contraction joints. Limit traffic and equipment on the LCB to that is required for placing additional layers of LCB or paving.

28-2.03B Subgrade

Immediately before spreading LCB, the subgrade must:

1. Comply with the specified compaction and elevation tolerance for the material involved
2. Be free from loose or extraneous material
3. Be uniformly moist

Areas of subgrade lower than the grade established by the Engineer must be filled with LCB. The Department does not pay for filling low areas of subgrade.

28-2.03C Proportioning, Mixing, and Transporting

Proportion LCB under section 90-1.02F except aggregate does not have to be separated into sizes.

Mix and transport LCB under section 90-1.02G except the 5th and 7th paragraphs in section 90-1.02G(6) do not apply.

28-2.03D Placing

Place LCB under section 40-1.03H(1) except the 3rd paragraph does not apply.

Unless otherwise described, construct LCB in minimum widths of 12 feet separated by construction joints. For LCB constructed monolithically in widths greater than 26 feet, construct a longitudinal contraction joint offset no more than 3 feet from the centerline of the width being constructed.

Contraction joints must comply with section 40-1.03D(3).

Construct transverse contraction joints in intervals that result in LCB areas where the lengths and widths are within 20 percent of each other. Measure the widths from any longitudinal construction or longitudinal contraction joints.

The Engineer waives the requirement for transverse contraction joints if you:

1. Submitted a notice under 28-2.01C(1)
2. Successfully field qualified LCB for 3-day compressive strength testing
3. Submit QC test results for 3-day compressive strength under section 28-2.01D(4).

If concrete pavement will be placed on LCB, construct longitudinal construction and longitudinal contraction joints in the LCB. Provide at least 1 foot horizontal clearance from planned longitudinal construction and longitudinal contraction joints in the concrete pavement.

Do not mix or place LCB when the atmospheric temperature is below 35 degrees F. Do not place LCB on frozen ground.

28-2.03E Finishing

Place LCB under section 40-1.03H(4) or under section 40-1.03H(5) except where there are confined work areas and when authorized:

1. Spread and shape LCB using suitable powered finishing machines and supplement with hand work as necessary
2. Consolidate LCB using high-frequency internal vibrators within 15 minutes after LCB is deposited on the subgrade
3. Vibrate with care such that adequate consolidation occurs across the full paving width and do not use vibrators for extensive weight shifting of the LCB

For LCB to be paved with HMA, before curing operation texture the LCB finished surface by dragging a broom, burlap, or a spring steel tine device. If using a spring steel tine device, the device must produce a scored surface with scores parallel or transverse to the pavement centerline. Texture at a time and in a manner that produces the coarsest texture for the method used.

For LCB to be paved with HMA, the finished surface must not vary more than 0.05 foot from the grade established by the Engineer.

Do not texture LCB that will be covered with concrete pavement. Before applying curing compound, finish LCB to a smooth surface free from mortar ridges and other projections.

For LCB to be paved with concrete pavement, the finished surface must not be above the grade, or more than 0.05 foot below the grade established by the Engineer.

The finished surface must be free from porous areas.

28-2.03F Curing

After finishing LCB, cure LCB with pigmented curing compound under section 90-1.03B(3) and 40-1.03K except for LCB to be paved with concrete pavement, comply with section 36-2. Apply curing compound to the area to be paved with concrete pavement:

1. In 2 separate applications
2. Before the atmospheric temperature falls below 40 degrees F

3. At a rate of 1 gal/150 sq ft for the first application
4. At a rate of 1 gal/200 sq ft for the second application. Within 4 days after the first application, clean the surface and apply the second application.

Immediately repair damage to the curing compound or LCB.

28-2.03G Surfaces Not Within Tolerance

Where LCB will be paved with concrete pavement, remove the base wherever the surface is higher than the grade established by the Engineer and replace it with LCB. Where LCB will not be paved with concrete pavement, remove the base wherever the surface is higher than 0.05 foot above the grade established by the Engineer and replace it with LCB. If authorized, grind the surface with either a diamond or carborundum blade to within tolerance. After grinding LCB to be paved with concrete pavement and after all free water has left the surface, clean foreign material and grinding residue from the surface. Apply curing compound to the ground area at a rate of approximately 1 gal/150 sq ft.

Where the surface of LCB is lower than 0.05 foot from the grade established by the Engineer, remove the base and replace it with LCB or, if authorized, fill low areas according to the pavement material as follows:

1. For HMA pavement, fill low areas with HMA that complies with the specifications for the lowest layer of pavement. Do not fill low areas concurrently with the paving operation.
2. For concrete pavement, fill low areas with pavement concrete concurrent with the paving operation.

28-2.04 PAYMENT

LCB is measured from the dimensions shown.

Replace section 28-3 with:

07-19-13

28-3 RAPID STRENGTH CONCRETE BASE

Reserved

Replace section 28-4 with:

07-19-13

28-4 LEAN CONCRETE BASE RAPID SETTING

Reserved

Replace section 28-5 with:

07-19-13

28-5 CONCRETE BASE

Reserved

Add to section 28:

07-19-13

28-6–28-14 RESERVED

28-15 REPLACE BASE

Reserved

^^

DIVISION IV SUBBASES AND BASES

29 TREATED PERMEABLE BASES

04-18-14

Replace "section 68-4.02C" in the 6th paragraph of section 29-1.03A with:

04-20-12

section 64-4.03

Replace the 1st paragraph of section 29-1.03B with:

04-18-14

Produce ATPB under section 39-1.02H, except a JMF is not required. Do not use RAP.

The temperature of the aggregate before adding the asphalt binder must be from 275 to 325 degrees F.

Do not store ATPB longer than 2 hours.

Combine aggregate with 2.5 percent asphalt binder by weight of dry aggregate. An increase or decrease in the asphalt content may be ordered after your proposed aggregate supply has been tested. If an ordered increase or decrease exceeds the specified amount of asphalt content by more than 0.1 percent by weight of dry aggregate, compensation for ATPB is determined by the total increase or decrease in asphalt.

The Engineer determines the asphalt content of the asphalt mixture under California Test 382. The bitumen ratio (pounds of asphalt per 100 lb of dry aggregate) must not vary more than 0.5 lb of asphalt above or below the amount designated by the Engineer. Samples used to determine the bitumen ratio are obtained from trucks at the plant or from the mat behind the paver before rolling. If the sample is taken from the mat behind the paver, the bitumen ratio must not be less than the amount designated by the Engineer, less 0.7 lb of asphalt per 100 lb of dry aggregate.

Replace the introductory clause of the 2nd paragraph of section 29-1.03B with:

04-18-14

Equipment for spreading and compacting ATPB must comply with section 39-1.03B. Compact ATPB in 1 layer using one of the following methods:

Replace "3rd" in the 4th paragraph of section 29-1.03C with:

07-19-13

4th

^^

Replace section 30 with:

04-20-12

30 RECLAIMED PAVEMENTS

04-20-12

30-1 GENERAL

30-1.01 GENERAL

Section 30 includes specifications for reclaiming the pavement section and constructing a base.

30-2 FULL DEPTH RECLAIMED—FOAMED ASPHALT

Reserved

30-3–30-6 RESERVED

^^

DIVISION V SURFACINGS AND PAVEMENTS

Replace section 36 with:

07-19-13

36 GENERAL

07-19-13

36-1 GENERAL

Section 36 includes general specifications for constructing surfacings and pavements.

36-2 BASE BOND BREAKER

Reserved

36-3–36-15 RESERVED

^^

37 BITUMINOUS SEALS

03-21-14

Replace section 37-1.01 with:

01-18-13

37-1.01 GENERAL

37-1.01A Summary

Section 37-1 includes general specifications for applying bituminous seals.

37-1.01B Definitions

Reserved

37-1.01C Submittals

Reserved

37-1.01D Quality Control and Assurance

37-1.01D(1) General

Reserved

37-1.01D(2) Prepaving Conference

For seal coats and micro-surfacing, schedule a prepaving conference at a mutually agreed upon time and place to meet with the Engineer.

Prepaving conference attendees must sign an attendance sheet provided by the Engineer. The prepaving conference must be attended by your:

1. Project superintendent
2. Paving construction foreman
3. Traffic control foreman

Be prepared to discuss:

1. Quality control
2. Acceptance testing
3. Placement
4. Training on placement methods
5. Checklist of items for proper placement
6. Unique issues specific to the project, including:
    6.1. Weather

6.2. Alignment and geometrics
6.3. Traffic control issues
6.4. Haul distances
6.5. Presence and absence of shaded areas
6.6. Any other local issues

37-1.02 MATERIALS

Not Used

37-1.03 CONSTRUCTION

Not Used

37-1.04 PAYMENT

Not Used

Replace section 37-2 with:

07-19-13

37-2 SEAL COATS

37-2.01 GENERAL

37-2.01A General

37-2.01A(1) Summary

Section 37-2 includes specifications for applying seal coats.

37-2.01A(2) Definitions

Reserved

37-2.01A(3) Submittals

Reserved

37-2.01A(4) Quality Control and Assurance

The following personnel must attend the prepaving conference:

1. Aggregate suppliers
2. Chip spreader operators
3. Emulsion and binder distributor
4. Coated chips producer if coated chips are used

37-2.01B Materials

Screenings must be broken stone, crushed gravel, or both. At least 90 percent of screenings by weight must be crushed particles as determined under California Test 205.

Screenings for seal coats must have the properties specified in the following table:

Seal Coat Screenings

Properties	Test method	Specification
Los Angeles Rattler, %, max Loss at 100 revolutions. Loss at 500 revolutions.	California Test 211	 10 40
Film stripping, %, max	California Test 302	25

37-2.01C Construction

37-2.01C(1) General

Wherever final sweeping or brooming of the seal coat surface is complete, place permanent traffic stripes and pavement markings within 10 days.

If you fail to place the permanent traffic stripes and pavement markings within the specified time, the Department withholds 50 percent of the estimated value of the seal coat work completed that has not received permanent traffic stripes and pavement markings.

37-2.01C(2) Equipment

Equipment for seal coats must include and comply with the following:

1. Screenings haul trucks. Haul trucks must have:
   1.1. Tailgates that discharge screenings
   1.2. Devices to lock onto the rear screenings spreader hitch
   1.3. Dump beds that will not push down on the spreader when fully raised
   1.4. Dump beds that will not spill screenings on the roadway when transferred to the spreader hopper
   1.5. Tarpaulins to cover precoated screenings when haul distance exceeds 30 minutes or ambient temperature is less than 65 degrees F
2. Self-propelled screenings spreader. The spreader must have:
   2.1. Screenings hopper in the rear
   2.2. Belt conveyors that carry the screenings to the front
   2.3. Spreading hopper capable of providing a uniform screening spread rate over the entire width of the traffic lane in 1 application.
3. Self-propelled power brooms. Do not use gutter brooms or steel-tined brooms. Brooms must be capable of removing loose screenings adjacent to barriers that prevent screenings from being swept off the roadway, including curbs, gutters, dikes, berms, and railings.
4. Pneumatic-tired rollers. Pneumatic-tired rollers must be an oscillating type at least 4 feet wide. Each roller must be self-propelled and reversible. Pneumatic tires must be of equal size, diameter, type, and ply. The roller must carry at least 3,000 lb of load on each wheel and each tire must have an air pressure of 100 ± 5 psi.

37-2.01C(3) Surface Preparation

Before applying seal coat, cover manholes, valve and monument covers, grates, or other exposed facilities located within the area of application, using a plastic or oil resistant construction paper secured by tape or adhesive to the facility being covered. Reference the covered facilities with a sufficient number of control points to relocate the facilities after the application of the seal coat.

After completion of the seal coat operation, remove covers from the facilities.

Immediately before applying seal coat, clean the surface to receive seal coat by removing extraneous material and drying. Cleaning the existing pavement includes the use of brooms.

37-2.01C(4) Applying Emulsion and Asphalt Binder

Prevent spray on existing pavement not intended for seal coat or on previously applied seal coat using a material such as building paper. Remove the material after use.

Align longitudinal joints between seal coat applications with designated traffic lanes.

For emulsion, overlap longitudinal joints by not more than 4 inches. You may overlap longitudinal joints up to 8 inches if authorized.

For areas not accessible to a truck distributor bar, apply the emulsion with a squeegee or other authorized means. For asphalt binder, hand spray nonaccessible areas. You may overlap the emulsion or asphalt binder applications before the application of screenings at longitudinal joints.

Do not apply the emulsion or asphalt binder unless there are sufficient screenings at the job site to cover the emulsion or asphalt binder.

Discontinue application of emulsion or asphalt binder early enough to comply with lane closure specifications and darkness. Apply to 1 lane at a time and cover the lane entirely in 1 operation.

37-2.01C(5) Spreading Screenings

Prevent vehicles from driving on asphaltic emulsion or asphalt binder before spreading screenings.

Spread screenings at a uniform rate over the full lane width in 1 application.

Broom excess screenings at joints before spreading adjacent screenings.

Operate the spreader at speeds slow enough to prevent screenings from rolling over after dropping.

If the spreader is not moving, screenings must not drop. If you stop spreading and screenings drop, remove the excess screenings before resuming activities.

37-2.01C(6) Finishing

Remove piles, ridges, or unevenly distributed screenings. Repair permanent ridges, bumps, or depressions in the finished surface. Spread additional screenings and roll if screenings are picked up by rollers or vehicles.

Seal coat joints between adjacent applications of seal coat must be smooth, straight, uniform, and completely covered. Longitudinal joints must be at lane lines and not overlap by more than 4 inches. Blend the adjacent applications by brooming.

A coverage is the number of passes a roller needs to cover the width. A pass is 1 roller movement parallel to the seal coat application in either direction. Overlapping passes are part of the coverage being made and are not part of a subsequent coverage. Do not start a coverage until completing the previous coverage.

Before opening to traffic, finish seal coat in the following sequence:

1. Perform initial rolling consisting of 1 coverage with a pneumatic-tired roller
2. Perform final rolling consisting of 3 coverages with a pneumatic-tired roller
3. Broom excess screenings from the roadway and adjacent abutting areas
4. Apply flush coat if specified

The Engineer may order salvaging of excess screenings.

Dispose of excess screenings the Engineer determines are not salvageable. Dispose of screenings in any of the following ways or locations:

1. Under section 14-10
2. On embankment slopes
3. In authorized areas

Salvaging and stockpiling excess screenings is change order work.

37-2.01C(7) Seal Coat Maintenance

Seals coat surfaces must be maintained for 4 consecutive days from the day screenings are applied. Maintenance must include brooming to maintain a surface free of loose screenings, to distribute screenings over the surface so as to absorb any free asphaltic material, to cover any areas deficient in cover coat material, and to prevent formation of corrugations.

After 4 consecutive days, excess screenings must be removed from the paved areas. Brooming must not displace screenings set in asphaltic material.

The exact time of brooming will be determined by the Engineer. As a minimum, brooming will be required at the following times:

1. On 2-lane 2-way roadways, from 2 to 4 hours after traffic, controlled with pilot cars, has been routed on the seal coat
2. On multilane roadways, from 2 to 4 hours after screenings have been placed
3. In addition to previous brooming, immediately before opening any lane to public traffic, not controlled with pilot cars
4. On the morning following the application of screenings on any lane that has been open to public traffic not controlled with pilot cars and before starting any other activities

For 2-lane 2-way roadways under 1-way traffic control, upon completion of secondary rolling, public traffic must be controlled with pilot cars and routed over the new seal coat for a period of 2 to 4 hours. The Engineer will determine the exact period of time.

Schedule the operations so that seal coat is placed on both lanes of the traveled way each work shift and so that 1-way traffic control is discontinued 1 hour before darkness. At the end of the work shift, the end of the seal coat on both lanes must generally match.

On multilane roadways, initial brooming must begin after the screenings have been in place for a period of 2 to 4 hours. If the initial brooming is not completed during the work shift in which the screenings were placed, the initial brooming must be completed at the beginning of the next work shift.

Public traffic must be controlled with pilot cars and be routed on the new seal coat surface of the lane for a minimum of 2 hours after completion of the initial brooming and before opening the lane to traffic not controlled with pilot cars. When traffic is controlled with pilot cars, a maximum of 1 lane in the direction of travel must be open to public traffic. Once traffic controlled with pilot cars is routed over the seal coat at a particular location, continuous control must be maintained at that location until the seal coat placement and brooming on adjacent lanes to receive seal coat is completed.

37-2.01D Payment

If there is no bid item for a traffic control system, furnishing and using a pilot car is included in the various items of the work involved in applying the seal coat.

If test results for the screenings grading do not comply with specifications, you may remove the seal coat represented by these tests or request that it remain in place with a payment deduction. The deduction is $1.75 per ton for the screenings represented by the test results.

37-2.02 FOG SEAL

37-2.02A General

37-2.02A(1) Summary

Fog seal coat includes applying a slow-setting asphaltic emulsion.

37-2.02A(2) Definitions

Reserved

37-2.02A(3) Submittals

Submit a 1/2-gallon sample of the asphaltic emulsion in a plastic container. Take the sample from the distributor truck spray bar at mid-load.

37-2.02A(4) Quality Control and Assurance

Reserved

37-2.02B Material

The Engineer selects the grade of slow-setting asphaltic emulsion to be used.

If additional water is added to the asphaltic emulsion, the resultant mixture must not be more than 1 part asphaltic emulsion to 1 part water. The Engineer determines the exact amount of additional water.

37-2.02C Construction

Apply asphaltic emulsion for fog seal coat at a residual asphalt rate from 0.02 to 0.06 gal/sq yd. The Engineer determines the exact rate.

Apply fog seal coat when the ambient air temperature is above 40 degrees F.

Sprinkle water on fog seal coat that becomes tacky in an amount determined by the Engineer.

If fog seal coat and seal coat with screenings are specified on the same project, apply fog seal coat at least 4 days before applying the adjoining seal coat with screenings. The joint between the seal coats must be neat and uniform.

37-2.02D Payment

The Department does not adjust the unit price for an increase or decrease in the asphaltic emulsion (fog seal coat) quantity.

37-2.03 FLUSH COATS

37-2.03A General

03-21-14

Flush coat includes applying a fog seal coat to the surface, followed by sand.

07-19-13

37-2.03B Material

The Engineer selects the grade of slow-setting or quick-setting asphaltic emulsion to be used.

Sand for flush coat must comply with the material specifications for fine aggregate grading in section 90-1.02C(3). Sand must not include organic material or clay.

37-2.03C Construction

Apply asphaltic emulsion for flush coat at a residual asphalt rate from 0.02 to 0.06 gal/sq yd. The Engineer determines the exact rate.

During flush coat activities, close adjacent lanes to traffic. Do not track asphaltic emulsion on existing pavement surfaces.

Apply sand immediately after the asphaltic emulsion application.

Spread sand with a self-propelled screenings spreader equipped with a mechanical device that spreads sand at a uniform rate over the full width of a traffic lane in a single application. Spread sand at a rate from 2 to 6 lb/sq yd. The Engineer determines the exact rate.

37-2.03D Payment

The Department does not adjust the unit price for an increase or decrease in the sand cover for the flush coat quantity.

37-2.04 ASPHALTIC EMULSION SEAL COAT

37-2.04A General

37-2.04A(1) General

37-2.04A(1)(a) Summary

Section 37-2.04 includes specifictions for applying asphaltic emulsion seal coat. Asphaltic emulsion seal coat includes applying asphaltic emulsion, followed by screenings, and then a flush coat.

Asphaltic emulsion seal coat includes one or more of the following types:

1. Nonpolymer asphaltic emulsion seal coat
2. Polymer asphaltic emulsion seal coat

A double asphaltic emulsion seal coat is the application of asphaltic emulsion, followed by screenings applied twice in sequence.

37-2.04A(1)(b) Definitions

Reserved

37-2.04A(1)(c) Submittals

At least 10 days before starting asphaltic emulsion seal coat application, submit the name of an authorized laboratory that will be performing asphaltic emulsion QC testing.

03-21-14

Submit a sample of asphaltic emulsion in a 1/2-gallon plastic container to the Engineer and to the authorized laboratory. Each sample must be submitted in an insulated shipping container within 24 hours of sampling.

07-19-13

Within 7 days after taking samples, submit the authorized laboratory's test results for asphaltic emulsion.

37-2.04A(1)(d) Quality Control and Assurance

Samples for the screenings grading and cleanness value must be taken from the spreader conveyor belt.

03-21-14

Within 3 business days of sampling, the authorized laboratory must test the asphaltic emulsion for:

1. Viscosity under AASHTO T 59
2. Sieve test under AASHTO T 59
3. Demulsibility under AASHTO T 59
4. Torsional recovery under California Test 332 for polymer asphaltic emulsion
5. Elastic recovery under AASHTO T 301 for polymer asphaltic emulsion

Circulate asphaltic emulsion in the distributor truck before sampling. Take samples from the distributor truck at mid load or from a sampling tap or thief. Before taking samples, draw and dispose of 1 gallon. In the presence of the Engineer take two 1/2-gallon samples every 55 tons or at least 1 day's production.

07-19-13

37-2.04A(2) Materials

Not Used

37-2.04A(3) Construction

The Engineer determines the exact application rate.

At the time of application, the temperature of the asphaltic emulsion must be from 130 to 180 degrees F.

When tested under California Test 339, the application rate for asphaltic emulsion must not vary from the average by more than:

1. 15 percent in the transverse direction
2. 10 percent in the longitudinal direction

37-2.04A(4) Payment

Not Used

37-2.04B Nonpolymer Asphaltic Emulsion Seal Coat

37-2.04B(1) General

37-2.04B(1)(a) Summary

Section 37-2.04B includes specifications for applying a nonpolymer asphaltic emulsion seal coat.

37-2.04B(1)(b) Definitions

Reserved

37-2.04B(1)(c) Submittals

Reserved

37-2.04B(1)(d) Quality Control and Assurance

For nonpolymer asphaltic emulsion seal coat, if a test result for the screenings cleanness value is from 75 to 80, you may request that the asphaltic emulsion seal coat represented by the test remain in place. A payment deduction is made as specified in section 37-2.04D. If the screenings cleanness value is less than 75, remove the asphaltic emulsion seal coat.

37-2.04B(2) Materials

Screenings for nonpolymer asphaltic emulsion seal coat must have the gradation as determined under California Test 202 in the following table.

Nonpolymer Asphaltic Emulsion Seal Coat Screenings Gradation

	Percentage passing			
Sieve sizes	Coarse 1/2" max	Medium 3/8" max	Medium fine 5/16" max	Fine 1/4" max
3/4"	100	--	--	--
1/2"	95–100	100	--	--
3/8"	50–80	90–100	100	100
No. 4	0–15	5–30	30–60	60–85
No. 8	0–5	0–10	0–15	0–25
No. 16	--	0–5	0–5	0–5
No. 30	--	--	0–3	0–3
No. 200	0–2	0–2	0–2	0–2

03-21-14

The cleanness value determined under California Test 227 must be 80 or greater.

07-19-13

37-2.04B(3) Construction

Asphaltic emulsion must be applied within the application rate ranges shown in the following table:

Asphaltic Emulsion Application Rates

Screenings	Application rate range(gallons per square yard)
Fine	0.15–0.30
Medium fine	0.25–0.35
Medium	0.25–0.40
Coarse	0.30–0.40

Apply asphaltic emulsion when the ambient air temperature is from 65 to 110 degrees F and the pavement surface temperature is at least 80 degrees F.

Do not apply asphaltic emulsion when weather forecasts predict the ambient air temperature will fall below 39 degrees F within 24 hours after application.

For double asphaltic emulsion seal coat, the asphaltic emulsion must be applied within the application rates shown in the following table:

Asphaltic Emulsion Application Rates

Screenings	Application rate range (gal/sq yd)
Double	
1st application	0.20–0.35
2nd application	0.20–0.30

You may stockpile screenings for asphaltic emulsion seal coat if you prevent contamination. Screenings must have damp surfaces at spreading. If water visibly separates from the screenings, do not spread. You may redampen them in the delivery vehicle.

Spread screenings before the asphaltic emulsion sets or breaks.

Spread screenings within 10 percent of the rate determined by the Engineer. Screenings must have a spread rate within the ranges shown in the following table:

Screening Spread Rates

Seal coat type	Range (lb/sq yd)
Fine	12–20
Medium fine	16–25
Medium	20–30
Coarse	23–30

Do not spread screenings more than 2,500 feet ahead of the completed initial rolling.

For double asphaltic emulsion seal coat, screenings must have a spread rate within the ranges shown in the following table:

Screening Spread Rates

Seal coat type	Range (lb/sq yd)
Double	
1st application	23–30
2nd application	12–20

Remove excess screenings on the 1st application before the 2nd application of asphaltic emulsion.

37-2.04B(4) Payment

If asphaltic emulsion seal coat with screenings does not comply with the cleanness value specifications, you may request that the seal coat remain in place with a pay deduction corresponding to the cleanness value shown in the following table:

Asphaltic Emulsion Seal Coat Cleanness Value Deductions

Cleanness value	Deduction
80 or over	None
79	$2.00 /ton
77–78	$4.00 /ton
75–76	$6.00 /ton

37-2.04C Polymer Asphaltic Emulsion Seal Coat

37-2.04C(1) General

37-2.04C(1)(a) Summary

Section 37-2.04C includes specifications for applying a polymer asphaltic emulsion seal coat.

37-2.04C(1)(b) Definitions

Reserved

37-2.04C(1)(c) Submittals

At least 10 days before starting polymer asphaltic emulsion seal coat application, submit a signed copy of the test result report of the Vialit test method for aggregate retention in chip seals (french chip) to the Engineer and to:

DEPARTMENT OF TRANSPORTATION
Division of Maintenance, Roadway Maintenance Office
1120 N Street, MS 31
Sacramento, CA 95814

37-2.04C(1)(d) Quality Control and Assurance

The authorized laboratory must test screenings for retention under the Vialit test method for aggregate in chip seals (french chip). The Vialit test results are not used for acceptance. The Vialit test is available at the METS Web site.

If the test results for polymer asphaltic emulsion do not comply with the specifications, the Engineer assesses a pay factor value for the following properties and increments:

03-21-14

Polymer Asphaltic Emulsion Pay Factor Table

Test method and property	Increment	Pay factor
Test on polymer asphaltic emulsion		
AASHTO T 59 (Viscosity, sec Saybolt Furol, at 50 °C)	Each 10 seconds above max or below min	1
AASHTO T 59 (settlement, 5 days, percent)	Each 1.5 percent above max	1
AASHTO T 59 (sieve test, percent max)	Each 0.2 percent above max	1
AASHTO T 59 (demulsibility percent)	Each 2 percent below min	1
Test on residue from evaporation test		
AASHTO T 49 (penetration, 25 °C)	Each 2 dm above max or below min	1
ASTM D 36 (field softening point °C)	2 °C below min	1
California Test 332 (torsional recovery [a])	For each 1 increment below the min value of 18	1
	For each 2 increments below the min value of 18	3
	For each 3 or more increments below the min value of 18	10
ASTM T 301 (elastic recovery [a])	For each 1 increment below the min value of 60	1
	For each 2 increment below the min value of 60	3
	For each 3 increment below the min value of 60	10

[a] The highest pay factor applies

07-19-13

The Engineer assesses a pay factor of 1 for sampling not performed in compliance with the specifications, including shipping and sampling containers.

For polymer asphaltic emulsion seal coat, if a test result for the screenings cleanness value is from 75 to 86, you may request that the asphaltic emulsion seal coat represented by the test remain in place. A payment deduction is made as specified in section 37-2.04D. If the screenings cleanness value is less than 75, remove the asphaltic emulsion seal coat.

37-2.04C(2) Materials

Polymer asphaltic emulsion must include elastomeric polymer.

03-21-14

Polymer asphaltic emulsion must comply with section 94, Table 3, under the test on residue from evaporation test for Grades PMRS2, PMRS2h, PMCRS2, and PMCRS2h and the following:

1. The penetration at 39.2 degrees F (200g for 60 seconds) determined under AASHTO T 49 must be at least 6.
2. Elastic recovery determined under AASHTO T 301 must be at least 60 percent.
3. Polymer content in percent by weight does not apply.
4. The ring and ball softening point temperature determined under AASHTO T 53 for Test on Residue from Evaporation Test must comply with the following minimum temperature requirement:
   - 4.1. 126 degrees F for a geographical ambient temperature from 32 to 104 degrees F
   - 4.2. 129 degrees F for a geographical ambient temperature from 18 to 104 degrees F
   - 4.3. 135 degrees F for a geographical ambient temperature from 18 to greater than 104 degrees F

07-19-13

Screenings for polymer asphaltic emulsion seal coat must have the gradation as determined under California Test 202 in the following table:

Polymer Asphaltic Emulsion Seal Coat Screenings Gradation

	Percentage passing			
Sieve sizes	Coarse 1/2" max	Medium 3/8" max	Medium fine 5/16" max	Fine 1/4" max
3/4"	100	--	--	--
1/2"	85–100	100	--	--
3/8"	0–30	85–100	100	100
No. 4	0–5	0–15	0–50	60–85
No. 8	--	0–5	0–15	0–25
No. 16	--	--	0–5	0–5
No. 30	--	--	0–3	0–3
No. 200	0–2	0–2	0–2	0–2

03-21-14

The cleanness value determined under California Test 227 must be 86 or greater.

07-19-13

37-2.04C(3) Construction

Polymer asphaltic emulsion must be applied within the application rate ranges shown in the following table:

Polymer Asphaltic Emulsion Application Rates

Screenings	Application rate range(gallons per square yard)
Fine	0.15–0.30
Medium fine	0.25–0.35
Medium	0.25–0.40
Coarse	0.30–0.40

Apply polymer asphaltic emulsion when the ambient air temperature is from 60 to 105 degrees F and the pavement surface temperature is at least 55 degrees F.

Do not apply polymer asphaltic emulsion when weather forecasts predict the ambient air temperature will fall below 39 degrees F within 24 hours after application.

For double asphaltic emulsion seal coat, polymer asphaltic emulsion must be applied within the application rates shown in the following table:

Polymer Asphaltic Emulsion Application Rates

Screenings	Application rate range (gal/sq yd)
Double	
1st application	0.20–0.35
2nd application	0.20–0.30

You may stockpile screenings for polymer emulsion seal coat if you prevent contamination. Screenings must have damp surfaces at spreading. If water visibly separates from the screenings, do not spread. You may redampen them in the delivery vehicle.

Spread screenings before the polymer emulsion sets or breaks.

Spread screenings within 10 percent of the rate determined by the Engineer. Screenings must have a spread rate within the ranges shown in the following table:

Screening Spread Rates

Seal coat type	Range (lb/sq yd)
Fine	12–20
Medium fine	16–25
Medium	20–30
Coarse	23–30

Do not spread screenings more than 2,500 feet ahead of the completed initial rolling.

For double seal coat, screenings must have a spread rate within the ranges shown in the following table:

Screening Spread Rates

Seal coat type	Range (lb/sq yd)
Double	
1st application	23–30
2nd application	12–20

Remove excess screenings on the 1st application before the 2nd application of asphaltic emulsion.

37-2.04C(4) Payment

If polymer asphaltic emulsion seal coat with screenings does not comply with the specifications for cleanness value you may request that the seal coat remain in place with a pay deduction corresponding by the cleanness value shown in the following table:

Polymer Asphaltic Emulsion Seal Coat Cleanness Value Deductions

Cleanness value	Deduction
86 or over	None
81–85	$2.20/ton
77–80	$4.40/ton
75–76	$6.60/ton

If test results for polymer asphaltic emulsion aggregate grading and cleanness value test results do not comply with the specifications, all deductions are made. A test for polymer asphaltic emulsion represents the smaller of 55 tons or 1 day's production. A test for the screenings grading or cleanness value represents the smaller of 300 tons or 1 day's production.

The payment deduction for noncompliant polymer asphaltic emulsion is based on the total pay factor value determined from the table titled, "Polymer Asphaltic Emulsion Pay Factor Deduction." You must remove polymer asphaltic emulsion seal coat with a pay factor value greater than 20. You may request seal coat with noncompliant polymer asphaltic emulsion to remain in place with a pay deduction for the total pay factor value shown in the following table:

Polymer Asphaltic Emulsion Pay Factor Deductions

Total pay factor value	Deduction
0	none
1–2	$5.00/ton
3–5	$10.00/ton
6–9	$15.00/ton
10–14	$25.00/ton
15–20	$50.00/ton

37-2.05 ASPHALT BINDER SEAL COATS

37-2.05A General

Reserved

37-2.05B Asphalt Rubber Binder Seal Coats

37-2.05B(1) General

37-2.05B(1)(a) Summary

Section 37-2.05B includes specifications for applying asphalt rubber binder seal coat. Asphalt rubber seal coat includes applying heated asphalt rubber binder, followed by heated screenings precoated with asphalt binder, followed by a flush coat.

37-2.05B(1)(b) Definitions

crumb rubber modifier: Ground or granulated high natural crumb rubber or scrap tire crumb rubber.

descending viscosity reading: Subsequent viscosity reading at least 5 percent lower than the previous viscosity reading.

high natural crumb rubber: Material containing 40 to 48 percent natural rubber.

scrap tire crumb rubber: Any combination of:

1. Automobile tires
2. Truck tires
3. Tire buffing

37-2.05B(1)(c) Submittals

For each delivery of asphalt rubber binder ingredients and asphalt rubber binder to the job site, submit a certificate of compliance and a copy of the specified test results.

Submit MSDS for each asphalt rubber binder ingredient and the asphalt rubber binder.

At least 15 days before use, submit:

1. Four 1-quart cans of mixed asphalt rubber binder
2. Samples of each asphalt rubber binder ingredient
3. Asphalt rubber binder formulation and data as follows:
   - 3.1. For asphalt binder and asphalt modifier submit:
     - 3.1.1. Source and grade of asphalt binder
     - 3.1.2. Source and type of asphalt modifier
     - 3.1.3. Percentage of asphalt modifier by weight of asphalt binder
     - 3.1.4. Percentage of combined asphalt binder and asphalt modifier by weight of asphalt rubber binder
     - 3.1.5. Test results for the specified quality characteristics
   - 3.2. For crumb rubber modifier submit:
     - 3.2.1. Each source and type of scrap tire crumb rubber and high natural rubber
     - 3.2.2. Percentage of scrap tire crumb rubber and high natural rubber by total weight of asphalt rubber binder
     - 3.2.3. Test results for the specified quality characteristics
   - 3.3. For asphalt rubber binder submit:
     - 3.3.1. Test results for the specified quality characteristics
     - 3.3.2. Minimum reaction time and temperature

At least 5 business days before use, submit the permit issued by the local air quality agency for asphalt rubber binder:

1. Field blending equipment
2. Application equipment

If an air quality permit is not required by the local air quality agency for producing asphalt rubber binder or spray applying asphalt rubber binder, submit verification from the local air quality agency that an air quality permit is not required for this Contract.

Submit a certified volume or weight slip for each delivery of asphalt rubber binder ingredients and asphalt rubber binder.

Submit a certificate of compliance and accuracy verification of test results for viscometers.

When determined by the Engineer, submit notification 15 minutes before each viscosity test or submit a schedule of testing times.

Submit the log of asphalt rubber binder viscosity test results each day of asphalt rubber seal coat work.

37-2.05B(1)(d) Quality Control and Assurance

Equipment used in producing asphalt rubber binder must be permitted for use by the local air quality agency. Equipment used in spreading asphalt rubber binder must be permitted for use by the local air quality agency.

Each asphalt rubber binder ingredient must be sampled and tested for compliance with the specifications by the manufacturer.

Test and submit results at least once per project or the following, whichever frequency is greater:

1. For crumb rubber modifier except for grading, at least once per 250 tons. Samples of scrap tire crumb rubber and high natural crumb rubber must be sampled and tested separately. Test each delivery of crumb rubber modifier for grading.
2. For asphalt binder, test and submit at least once per 200 tons of asphalt binder production.
3. For asphalt modifier, test and submit at least once per 25 tons of asphalt modifier production.

Scrap tire crumb rubber and high natural crumb rubber must be delivered to the asphalt rubber production site in separate bags.

Take viscosity readings of asphalt rubber binder under ASTM D7741 during asphalt rubber binder production. Start taking viscosity readings of samples taken from the reaction vessel at least 45 minutes after adding crumb rubber modifier and continue taking viscosity readings every 30 minutes until 2 consecutive descending viscosity readings have been obtained and the final viscosity meets the specification requirement. After meeting the 2 descending viscosity readings requirement, continue to take viscosity readings hourly and within 15 minutes before use. Log the test results, including time of testing and temperature of the asphalt rubber binder.

37-2.05B(2) Material

37-2.05B(2)(a) General

Reserved

37-2.05B(2)(b) Asphalt Binder

Asphalt binder must comply with the specifications for asphalt binder. Do not modify asphalt binder with polymer.

37-2.05B(2)(c) Asphalt Modifier

Asphalt modifier must be a resinous, high flash point, and aromatic hydrocarbon. Asphalt modifier must have the values for the quality characteristics shown in the following table:

Asphalt Modifier for Asphalt Rubber Binder

Quality characteristic	Test method	Value
Viscosity, m^2/s (x 10^{-6}) at 100 °C	ASTM D 445	X ± 3 [a]
Flash point, CL.O.C., °C	ASTM D 92	207 min
Molecular analysis		
Asphaltenes, percent by mass	ASTM D 2007	0.1 max
Aromatics, percent by mass	ASTM D 2007	55 min

[a] "X" denotes the proposed asphalt modifier viscosity from 19 to 36. A change in "X" requires a new asphalt rubber binder submittal.

37-2.05B(2)(d) Crumb Rubber Modifier

Crumb rubber modifier must be ground or granulated at ambient temperature.

Scrap tire crumb rubber and high natural crumb rubber must be delivered to the asphalt rubber binder production site in separate bags.

Steel and fiber must be separated. If steel and fiber are cryogenically separated, it must occur before grinding and granulating. Cryogenically-produced crumb rubber modifier particles must be large enough to be ground or granulated.

Wire must not be more than 0.01 percent by weight of crumb rubber modifier. Crumb rubber modifier must be free of contaminants except fabric, which must not exceed 0.05 percent by weight of crumb rubber modifier. Method for determining the percent weight of wire and fabric is available under Laboratory Procedure 10 at the following METS Web site:

http://www.dot.ca.gov/hq/esc/Translab/ofpm/fpmlab.htm

The length of an individual crumb rubber modifier particle must not exceed 3/16 inch.

Crumb rubber modifier must be dry, free-flowing particles that do not stick together. A maximum of 3 percent calcium carbonate or talc by weight of crumb rubber modifier may be added. Crumb rubber modifier must not cause foaming when combined with the asphalt binder and asphalt modifier.

Specific gravity of crumb rubber modifier must be from 1.1 to 1.2 determined under California Test 208.

When tested under ASTM D 297, crumb rubber modifier must comply with the requirements shown in the following table:

Crumb Rubber Modifier

Quality characteristic	Scrap tire crumb rubber (percent)		High natural rubber (percent)	
	Min	Max	Min	Max
Acetone extract	6.0	16.0	4.0	16.0
Rubber hydrocarbon	42.0	65.0	50.0	--
Natural rubber content	22.0	39.0	40.0	48.0
Carbon black content	28.0	38.0	--	--
Ash content	--	8.0	--	--

Scrap tire crumb rubber must have the gradation shown in the following table:

Scrap Tire Crumb Rubber Gradation
Percentage passing

Sieve size	Gradation limit	Operating range	Contract compliance
No. 8	100	100	100
No. 10	98–100	95–100	90–100
No. 16	45–75	35–85	32–88
No. 30	2–20	2–25	1–30
No. 50	0–6	0–10	0–15
No. 100	0–2	0–5	0–10
No. 200	0	0–2	0–5

High natural crumb rubber must have the gradation shown in the following table:

High Natural Crumb Rubber Gradation
Percentage passing

Sieve size	Gradation limit	Operating range	Contract compliance
No. 10	100	100	100
No. 16	95–100	92–100	85–100
No. 30	35–85	25–95	20–98
No. 50	10–30	6–35	2–40
No. 100	0–4	0–7	0–10
No. 200	0–1	0–3	0–5

Test the crumb rubber modifier gradation under ASTM C 136 except

1. Split or quarter 100 ± 5 g from the crumb rubber modifier sample and dry to a constant mass at a temperature from 57 to 63 degrees C and record the dry sample mass. Place the crumb rubber modifier sample and 5 g of talc in a 1/2-liter jar. Seal the jar, then shake the jar by hand for at least 1 minute to mix the crumb rubber modifier and the talc. Continue shaking or open the jar and stir until the particle agglomerates and clumps are broken and the talc is uniformly mixed.
2. Place 1 rubber ball on each sieve. Each ball must weigh 8.5 ± 0.5 g, measure 24.5 ± 0.5 mm in diameter, and have a Shore Durometer "A" hardness of 50 ± 5 determined under ASTM D 2240. After sieving the combined material for 10 ± 1 minutes, disassemble the sieves. Brush material adhering to the bottom of a sieve into the next finer sieve. Weigh and record the mass of the material retained on the 2.36-milimeter sieve and leave this material (do not discard) on the scale or balance. Fabric balls must remain on the scale or balance and be placed together on the side to prevent them from being covered or disturbed when the material from finer sieves is placed onto the scale or balance. The material retained on the 2.00-milimeter sieve must be added to the scale or balance. Weigh and record that mass as the accumulative mass retained on the 2.00-milimeter sieve. Continue weighing and recording the accumulated masses retained on the remaining sieves until the accumulated mass retained in the pan has been determined. Before discarding the crumb rubber modifier sample, separately weigh and record the total mass of fabric balls in the sample.
3. Determine the mass of material passing the 75-micrometer sieve by subtracting the accumulated mass retained on the 75-micrometer sieve from the accumulated mass retained in the pan. If the material passing the 75-micrometer sieve has a mass of 5 g or less, cross out the recorded number for the accumulated mass retained in the pan and copy the number recorded for the accumulated mass retained on the 75-micrometer sieve and record that number, next to the crossed out number, as the accumulated mass retained in the pan. If the material passing the 75-micrometer sieve has a mass greater than 5 g, cross out the recorded number for the accumulated mass retained in the pan, subtract 5 g from that number and record the difference next to the crossed out number. The adjustment to the accumulated mass retained in the pan accounts for the 5 g of talc added to the sample. For calculation purposes, the adjusted total sample mass is the same as the adjusted

accumulated mass retained in the pan. Determine the percent passing based on the adjusted total sample mass and record to the nearest 0.1 percent.

37-2.05B(2)(e) Asphalt Rubber Binder

Asphalt rubber binder must be a combination of:

1. Asphalt binder
2. Asphalt modifier
3. Crumb rubber modifier

Asphalt rubber binder blending equipment must be authorized under the Department's material plant quality program.

The blending equipment must allow the determination of weight percentages of each asphalt rubber binder ingredient.

Asphalt rubber binder must be 79 ± 1 percent by weight asphalt binder and 21 ± 1 percent by weight of crumb rubber modifier. The minimum percentage of crumb rubber modifier must be 20.0 percent and lower values may not be rounded up.

Crumb rubber modifier must be 76 ± 2 percent by weight scrap tire crumb rubber and 24 ± 2 percent by weight high natural rubber.

Asphalt modifier and asphalt binder must be blended at the production site. Asphalt modifier must be from 2.5 to 6.0 percent by weight of the asphalt binder in the asphalt rubber binder. The asphalt rubber binder supplier determines the exact percentage.

If blended, the asphalt binder must be from 375 to 440 degrees F when asphalt modifier is added and the mixture must circulate for at least 20 minutes. Asphalt binder, asphalt modifier, and crumb rubber modifier may be proportioned and combined simultaneously.

The blend of asphalt binder and asphalt modifier must be combined with crumb rubber modifier at the asphalt rubber binder production site. The asphalt binder and asphalt modifier blend must be from 375 to 440 degrees F when crumb rubber modifier is added. Combined ingredients must be allowed to react at least 45 minutes at temperatures from 375 to 425 degrees F except the temperature must be at least 10 degrees F below the flash point of the asphalt rubber binder.

After reacting, the asphalt rubber binder must have the values for the quality characteristics shown in the following table:

Asphalt Rubber Binder

Quality characteristic	Test method	Requirement	
		Min	Max
Cone penetration @ 25 °C, 1/10 mm	ASTM D 217	25	60
Resilience @ 25 °C, percent rebound	ASTM D 5329	18	50
Field softening point, °C	ASTM D 36	55	88
Viscosity @190 °C, Pa • s ($x10^{-3}$)	ASTM D 7741	1500	2500

Maintain asphalt rubber binder at a temperature from 375 to 415 degrees F.

Stop heating unused asphalt rubber binder 4 hours after the 45-minute reaction period. Reheating asphalt rubber binder that cools below 375 degrees F is a reheat cycle. Do not exceed 2 reheat cycles. If reheating, asphalt rubber binder must be from 375 to 415 degrees F before use.

During reheating, you may add scrap tire crumb rubber. Scrap tire crumb rubber must not exceed 10 percent by weight of the asphalt rubber binder. Allow added scrap tire crumb rubber to react for at least 45 minutes. Reheated asphalt rubber binder must comply with the specifications for asphalt rubber binder.

37-2.05B(2)(f) Screenings

Before precoating with asphalt binder and when tested under California Test 202, screenings for asphalt rubber seal coat must have the gradation shown in the following table:

Asphalt Rubber Seal Coat Screenings Gradation

Sieve sizes	Percentage passing by weight		
	Coarse 1/2" max	Medium 1/2" max	Fine 3/8" max
3/4"	100	100	100
1/2"	75–90	85–90	95–100
3/8"	0–20	0–30	70–85
No. 4	0–2	0–5	0–15
No. 8	--	--	0–5
No. 200	0–1	0–1	0–1

Screenings must have the values for the properties shown in the following table:

Seal Coat Screenings

Properties	Test method	Value
Cleanness value, min	California Test 227	80
Durability, min	California Test 229	52

37-2.05B(3) Construction

37-2.05B(3)(a) General

Reserved

37-2.05B(3)(b) Equipment

Self-propelled distributor truck for applying asphalt rubber binder must have the following features:

1. Heating unit
2. Internal mixing unit
3. Pumps that spray asphalt rubber binder within 0.05 gal/sq yd of the specified rate
4. Fully circulating spray bar that applies asphalt rubber binder uniformly
5. Tachometer
6. Pressure gages
7. Volume measuring devices
8. Thermometer
9. Observation platform on the rear of the truck for an observer on the platform to see the nozzles and unplug them if needed

37-2.05B(3)(c) Precoating Screenings

For asphalt rubber seal coat, do not recombine fine materials collected in dust control systems except cyclone collectors or knock-out boxes with any other aggregate used in the production of screenings.

For asphalt rubber seal coat, screenings must be preheated from 260 to 325 degrees F. Coat with any of the asphalts specified in the table titled "Performance Graded Asphalt Binder" in section 92. Coat at a central mixing plant. The asphalt must be from 0.5 to 1.0 percent by weight of dry screenings. The Engineer determines the exact rate.

Plant must be authorized under the Department's material plant quality program.

Do not stockpile preheated or precoated screenings.

37-2.05B(3)(d) Asphalt Rubber Binder Application

Apply asphalt rubber binder immediately after the reaction period. At the time of application, the temperature of asphalt rubber binder must be from 385 to 415 degrees F.

Apply asphalt rubber binder at a rate from 0.55 to 0.65 gal/sq yd. The Engineer determines the exact rate.

Apply asphalt rubber binder when the atmospheric temperature is from 60 to 105 degrees F and the pavement surface temperature is at least 55 degrees F.

Do not apply asphalt rubber binder unless there are sufficient screenings available to cover the asphalt rubber binder within 2 minutes. Intersections, turn lanes, gore points, and irregular areas must be covered within 15 minutes.

Do not apply asphalt rubber binder when weather or road conditions are unsuitable, including high wind or when the pavement is damp. In windy conditions you may adjust the distributor bar height and distribution speed, and use shielding equipment, if the Engineer authorizes your request.

37-2.05B(3)(e) Screenings Application

During transit, cover precoated screenings for asphalt rubber seal coat with tarpaulins if the ambient air temperature is below 65 degrees F or the haul time exceeds 30 minutes.

At the time of application, screenings for asphalt rubber seal coat must be from 225 to 325 degrees F.

Spread screenings at a rate from 28 to 40 lb/sq yd. The exact rate is determined by the Engineer. Spread to within 10 percent of the determined rate.

37-2.05B(3)(f) Rolling and Sweeping

Perform initial rolling within 90 seconds of spreading screenings. Do not spread screenings more than 200 feet ahead of the initial rolling.

For final rolling, you may request use of a steel-wheeled roller weighing from 8 to 10 tons, static mode only.

Perform a final sweeping before Contract acceptance. The final sweeping must not dislodge screenings.

Dispose of swept screenings at least 150 feet from any waterway.

37-2.05B(4) Payment

Screenings for asphalt rubber seal coat are measured by coated weight after they are preheated and precoated with asphalt binder. The weight of screenings must be the coated weight.

If recorded batch weights are printed automatically, the bid item for screenings for asphalt-rubber seal coat are measured using the printed batch weights, provided:

1. Total aggregate weight for screenings per batch is printed
2. Total asphalt binder weight per batch is printed
3. Each truckload's zero tolerance weight is printed before weighing the first batch and after weighing the last batch
4. Time, date, mix number, load number and truck identification are correlated with a load slip
5. A copy of the recorded batch weights is certified by a licensed weighmaster and submitted to the Engineer

Screenings for asphalt rubber seal coat is paid for as precoated screenings.

Asphalt-rubber binder is measured under the specifications for asphalts.

If test results for gradation tests do not comply with the specifications, deductions are taken.

Each gradation test for scrap tire crumb rubber represents 10,000 lbs or the amount used in that day's production, whichever is less.

Each gradation test for high natural rubber represents 3,400 lbs or the amount used in that day's production, whichever is less.

For each gradation test, the following pay deductions will be taken from the asphalt rubber bid item:

Gradation Test

Material	Test result [a]	Deduction
Scrap tire crumb rubber	Operating range < TR < Contract compliance	$250
Scrap tire crumb rubber	TR > Contract compliance	$1,100
High natural crumb rubber	Operating range < TR < Contract compliance	$250
High natural crumb rubber	TR > Contract compliance	$600

[a] Test Result = TR

37-2.05C Modified Asphalt Binder Seal Coat

Reserved

03-21-14

37-2.06 STRESS ABSORBING MEMBRANE INTERLAYER

37-2.06A General

Section 37-2.06 applies where a stress absorbing membrane interlayer (SAMI) is shown.

Comply with section 37-2.05B except a flush coat is not required.

37-2.06B Materials

For SAMI, screenings must comply with the 3/8-inch maximum gradation.

37-2.06C Construction

For SAMI, section 37-2.01C(7) does not apply.

Final rolling and sweeping are not required for SAMI.

37-2.06D Payment

Not Used

37-2.07–37-2.10 RESERVED

Add to section 37-3.01D(1):

01-18-13

Micro-surfacing spreader operators must attend the prepaving conference.

^^

39 HOT MIX ASPHALT

04-18-14

Replace the headings and paragraphs in section 39 with:

04-18-14

39-1 GENERAL

39-1.01 GENERAL

39-1.01A Summary

Section 39-1 includes general specifications for producing and placing hot mix asphalt.

HMA includes one or more of the following types:

1. Type A HMA
2. RHMA-G
3. OGFC

4. BWC
5. Minor HMA

If a warm mix asphalt technology is specified, the warm mix asphalt technology to be used must be authorized. For Department-authorized warm mix asphalt technologies, go to the METS website.

39-1.01B Definitions

binder replacement: Binder from RAP expressed as a percent of the total binder in the mix.

coarse aggregate: Aggregate retained on a no. 4 sieve.

fine aggregate: Aggregate passing the no. 4 sieve.

leveling course: Thin layer of HMA used to correct minor variations in the longitudinal and transverse profile of the pavement before placement of other pavement layers.

lower course: Layer of HMA below 0.2 feet from finished grade exclusive of OGFC.

miscellaneous areas: Areas outside the traveled way such as:

1. Median areas not including inside shoulders
2. Island areas
3. Sidewalks
4. Gutters
5. Ditches
6. Overside drains
7. Aprons at ends of drainage structures

processed RAP: RAP that has been fractionated.

substitution rate: Percent of RAP by dry weight of aggregate substituted for virgin aggregate.

supplemental fine aggregate: Aggregate passing the no. 30 sieve, including hydrated lime, portland cement, and fines from dust collectors.

surface course: Upper 0.2 feet of HMA exclusive of OGFC.

top layer: Final riding surface.

39-1.01C Submittals

39-1.01C(1) General

Reserved

39-1.01C(2) Job Mix Formula

39-1.01C(2)(a) General

Except for the HMA to be used in miscellaneous areas and dikes, submit your proposed JMF for each type of HMA to be used. The JMF must be submitted on the Contractor Job Mix Formula Proposal form along with:

1. Mix design documentation on Contractor Hot Mix Asphalt Design Data form dated within 12 months of submittal
2. JMF verification on a Caltrans Hot Mix Asphalt Verification form, if applicable
3. JMF renewal on a Caltrans Job Mix Formula Renewal form, if applicable
4. MSDS for:
   - 4.1. Asphalt binder
   - 4.2. Supplemental fine aggregate except fines from dust collectors
   - 4.3. Antistrip additives

The Contractor Hot Mix Asphalt Design Data form must show documentation on aggregate quality.

If you cannot submit a Department-verified JMF on a Caltrans Hot Mix Asphalt Verification form dated within 12 months before HMA production, the Engineer verifies the JMF.

Submit a new JMF if you change any of the following:

1. Target asphalt binder percentage greater than ±0.2 percent
2. Asphalt binder supplier
3. Combined aggregate gradation
4. Aggregate sources
5. Liquid antistrip producer or dosage
6. Average binder content in a new fractionated RAP stockpile by more than ±2.0 percent from the average RAP binder content reported on page 4 of your Contractor Hot Mix Asphalt Design Data form
7. Average maximum specific gravity in a new fractionated RAP stockpile by more than ±0.060 from the average maximum specific gravity value reported on page 4 of your Contractor Hot Mix Asphalt Design Data form
8. Any material in the JMF

Allow the Engineer 5 business days from a complete JMF submittal for document review of the aggregate qualities, mix design, and JMF. The Engineer notifies you if the proposed JMF submittal is accepted.

If your JMF fails verification testing, submit an adjusted JMF based on your testing. An adjusted JMF requires a new Contractor Job Mix Formula Proposal form and Contractor Hot Mix Asphalt Design Data form and verification of a plant-produced sample.

You may submit an adjusted aggregate gradation TV on a Contractor Job Mix Formula Proposal form before verification testing. Aggregate gradation TV must be within the TV limits specified.

39-1.01C(2)(b) Job Mix Formula Renewal

You may request a JMF renewal by submitting:

1. Proposed JMF on a Contractor Job Mix Formula Proposal form
2. Previously verified JMF documented on a Caltrans Hot Mix Asphalt Verification form dated within 12 months
3. Mix design documentation on a Contractor Hot Mix Asphalt Design Data form used for the previously verified JMF

39-1.01C(2)(c) Job Mix Formula Modification

For an authorized JMF, submit a modified JMF if you change any of the following:

1. Asphalt binder supplier
2. Liquid antistrip producer
3. Liquid antistrip dosage

You may change any of the above items only once during the Contract.

Submit your modified JMF request a minimum of 15 days before production. Each modified JMF submittal must consist of:

1. Proposed modified JMF on Contractor Job Mix Formula Proposal form, marked *Modified*.
2. Mix design records on Contractor Hot Mix Asphalt Design Data form for the authorized JMF to be modified.
3. JMF verification on Hot Mix Asphalt Verification form for the authorized JMF to be modified.
4. Test results for the modified JMF in compliance with the mix design specifications. Perform tests at the mix design OBC as shown on the Contractor Asphalt Mix Design Data form.

With an accepted modified JMF submittal, the Engineer verifies each modified JMF within 10 days of receiving all verification samples.

39-1.01C(3) Quality Control Plan

With your proposed JMF submittal, submit a QC plan for HMA.

The QC plan must describe the organization and procedures for:

1. Controlling HMA quality characteristics
2. Taking samples, including sampling locations

3. Establishing, implementing, and maintaining QC
4. Determining when corrective actions are needed
5. Implementing corrective actions
6. Methods and materials for backfilling core locations

The QC plan must address the elements affecting HMA quality including:

1. Aggregate
2. Asphalt binder
3. Additives
4. Production
5. Paving

The QC plan must include aggregate QC sampling and testing during lime treatment.

The Engineer reviews the QC plan within 5 business days from the submittal. Do not start HMA production until the Engineer authorizes the plan.

If QC procedures, personnel, tester qualifications, sample testing locations, or lab accreditation status change, submit a QC plan supplement at least 3 business days before implementing the proposed change. Do not implement the change without authorization.

39-1.01C(4) Test Results

For mix design, JMF verification, production start-up, and each 10,000 tons, submit AASHTO T 283 and AASHTO T 324 (Modified) test results to the Engineer and electronically to:

Moisture_Tests@dot.ca.gov

Submit all QC test results, except AASHTO T 283 and AASHTO T 324 (Modified), within 3 business days of a request. Submit AASHTO T 283 QC tests within 15 days of sampling.

For tests performed under AASHTO T 324 (Modified), submit test data and 1 tested sample set within 5 business days of sampling.

If coarse and fine durability index tests are required, submit test results within 2 business days of testing.

If tapered notched wedge is used, submit test result values within 24 hours of testing.

39-1.01C(5) Reserved

39-1.01C(6) Liquid Antistrip Treatment

If liquid antistrip treatment is used, submit the following with your proposed JMF submittal:

1. One 1-pint sample
2. Infrared analysis including copy of absorption spectra
3. Certified copy of test results
4. Certificate of compliance for each liquid antistrip shipment. On each certificate of compliance, include:
   - 4.1. Your signature and printed name
   - 4.2. Shipment number
   - 4.3. Material type
   - 4.4. Material specific gravity
   - 4.5. Refinery
   - 4.6. Consignee
   - 4.7. Destination
   - 4.8. Quantity
   - 4.9. Contact or purchase order number
   - 4.10. Shipment date
6. Proposed proportions for liquid antistrip

For each delivery of liquid antistrip to the HMA production plant, submit a 1-pint sample to METS. Submit shipping documents. Label each liquid antistrip sampling container with:

1. Liquid antistrip type

2. Application rate
3. Sample date
4. Contract number

At the end of each day's production shift, submit production data in electronic and printed media. Present data on electronic media in tab delimited format. Use line feed carriage return with 1 separate record per line for each production data set. Allow sufficient fields for the specified data. Include data titles at least once per report. For each HMA mixing plant type, submit the following information in the order specified:

1. For batch plant mixing:
   1.1. Production date
   1.2. Time of batch completion
   1.3. Mix size and type
   1.4. Each ingredient's weight
   1.5. Asphalt binder content as a percentage of the total weight of mix
   1.6. Liquid antistrip content as a percentage of the asphalt binder weight
2. For continuous mixing plant:
   2.1. Production date
   2.2. Data capture time
   2.3. Mix size and type
   2.4. Flow rate of wet aggregate collected directly from the aggregate weigh belt
   2.5. Aggregate moisture content as percentage of the dry aggregate weight
   2.6. Flow rate of asphalt binder collected from the asphalt binder meter
   2.7. Flow rate of liquid antistrip collected from the liquid antistrip meter
   2.8. Asphalt binder content as percentage of the total weight of mix calculated from:
      2.8.1. Aggregate weigh belt output
      2.8.2. Aggregate moisture input
      2.8.3. Asphalt binder meter output
   2.9. Liquid antistrip content as percentage of the asphalt binder weight calculated from:
      2.9.1. Asphalt binder meter output
      2.9.2. Liquid antistrip meter output

39-1.01C(7) Lime Treatment

If aggregate lime treatment is used, submit the following with your proposed JMF submittal and each time you produce lime-treated aggregate:

1. Exact lime proportions for fine and coarse virgin aggregate
2. If marination is required, the averaged aggregate quality test results within 24 hours of sampling
3. For dry lime aggregate treatment, a treatment data log from the dry lime and aggregate proportioning device in the following order:
   3.1. Treatment date
   3.2. Time of day the data is captured
   3.3 Aggregate size being treated
   3.4. HMA type and mix aggregate size
   3.5. Wet aggregate flow rate collected directly from the aggregate weigh belt
   3.6. Aggregate moisture content, expressed as a percent of the dry aggregate weight
   3.7. Flow rate of dry aggregate calculated from the flow rate of wet aggregate
   3.8. Dry lime flow rate
   3.9. Lime ratio from the authorized JMF for each aggregate size being treated
   3.10. Lime ratio from the authorized JMF for the combined aggregate
   3.11. Actual lime ratio calculated from the aggregate weigh belt output, the aggregate moisture input, and the dry lime meter output, expressed as a percent of the dry aggregate weight
   3.12. Calculated difference between the authorized lime ratio and the actual lime ratio
4. For lime slurry aggregate treatment, a treatment data log from the slurry proportioning device in the following order:
   4.1. Treatment date
   4.2. Time of day the data is captured
   4.3. Aggregate size being treated
   4.4. Wet aggregate flow rate collected directly from the aggregate weigh belt

4.5. Moisture content of the aggregate just before treatment, expressed as a percent of the dry aggregate weight
4.6. Dry aggregate flow rate calculated from the wet aggregate flow rate
4.7. Lime slurry flow rate measured by the slurry meter
4.8. Dry lime flow rate calculated from the slurry meter output
4.9. Authorized lime ratio for each aggregate size being treated
4.10. Actual lime ratio calculated from the aggregate weigh belt and the slurry meter output, expressed as a percent of the dry aggregate weight
4.11. Calculated difference between the authorized lime ratio and the actual lime ratio
4.12. Dry lime and water proportions at the slurry treatment time

Each day during lime treatment, submit the treatment data log on electronic media in tab delimited format on a removable CD-ROM storage disk. Each continuous treatment data set must be a separate record using a line feed carriage return to present the specified data on 1 line. The reported data must include data titles at least once per report.

39-1.01C(8) Warm Mix Asphalt Technology

If a warm mix asphalt technology is used, submit the following with your proposed JMF submittal:

1. MSDS for warm mix asphalt technology
2. For warm mix asphalt water injection foam technology:
   2.1. Name of technology
   2.2. California Test 386 test result for foamed bitumen expansion ratio dated within 12 months of submittal
   2.3. California Test 386 test result for foamed bitumen half-life dated within 12 months of submittal
   2.4. Optimum foaming water content
   2.5. Proposed HMA production temperature range
3. For warm mix asphalt additive technology:
   3.1. Name of technology
   3.2. Percent admixture by weight of binder and percent admixture by total weight of HMA as recommended by the manufacturer
   3.3. Methodology for inclusion of admixture in laboratory-produced HMA
   3.4. Proposed HMA production temperature range

Collect and hold data for the duration of the contract and submit the electronic media, daily and upon request. The snapshot of production data must include the following:

1. Date of production
2. Production location
3. Time of day the data is captured
4. HMA mix type being produced and target binder rate
5. HMA additive type, brand, and target rate
6. Temperature of the binder and HMA mixture
7. For a continuous mixing plant, the rate of flow of the dry aggregate calculated from the wet aggregate flow rate as determined by the conveyor scale
8. For a continuous mixing plant, the rate of flow of the asphalt meter
9. For a continuous mixing plant, the rate of flow of HMA additive meter
10. For batch plant mixing, actual batch weights of all ingredients
11. Dry aggregate to binder ratio calculated from metered ingredient output
12. Dry aggregate to HMA additive ratio calculated from metered output

At the end of each day's production shift, submit electronic and printed media from the HMA plant process controller. Present data on electronic media in comma-separated values or tab-separated values format. The captured data for the ingredients represented by production snapshot must have allowances for sufficient fields to satisfy the amount of data required by these specifications and include data titles at least once per report.

39-1.01C(9) Samples

For the samples taken for JMF verification, submit 3 parts to the Engineer and use 1 part for your testing.

At production start-up and within 1000 tons of the halfway point of production of HMA, submit samples split from your HMA production sample for AASHTO T 283 and AASHTO T 324 (Modified) tests to the Engineer.

For production samples taken, submit 3 parts to the Engineer and use 1 part for your testing.

39-1.01C(10)–39-1.01C(11) Reserved

39-1.01C(12) Data Cores

Section 39-1.01C(12) applies if a bid item for data core is shown on the Bid Item List.

Submit a summary of data cores taken and a photograph of each data core to the Engineer and to:

Coring@dot.ca.gov

For each data core, the summary must include:

1. Project identification number
2. Date cored
3. Core identification number
4. Type of materials recovered
5. Type and approximate thickness of unstabilized material not recovered
6. Total core thickness
7. Thickness of each individual material to within:
   - 7.1. For recovered material, 1/2 inch
   - 7.2. For unstabilized material, 1.0 inch
8. Location including:
   - 8.1. County
   - 8.2. Route
   - 8.3. Post mile
   - 8.4. Lane number
   - 8.5. Lane direction
   - 8.6. Station

Each data core digital photograph must include a ruler laid next to the data core. Each photograph must include:

1. Core
2. Project identification number
3. Core identification number
4. Date cored
5. County
6. Route
7. Post mile
8. Lane number
9. Lane direction

39-1.01C(13) Pavement Smoothness

39-1.01C(13)(a) General

Reserved

39-1.01C(13)(b) Straightedge Measurements

Within 2 business days of performing straightedge measurements, submit areas requiring smoothness correction. Identify locations of smoothness correction by:

1. Location Number
2. District-County-Route
3. Beginning station or post mile to the nearest 0.01 mile
4. For correction areas within a lane:
   - 4.1. Lane direction as NB, SB, EB, or WB
   - 4.2. Lane number from left to right in direction of travel

4.3. Wheel path as "L" for left, "R" for right, or "B" for both
5. For correction areas not within a lane:
   5.1. Identify pavement area (i.e., shoulder, weight station, turnout)
   5.2. Direction and distance from centerline as "L" for left or "R" for right
6. Estimated size of correction area

39-1.01C(13)(c) Inertial Profiler Certification

At least 5 business days before the start of initial profiling or changing profiler or operator, submit:

1. Inertial profiler certification issued by the Department.
2. Operator certification for the inertial profiler issued by the Department.
3. List of manufacturer's recommended test procedures for the inertial profiler calibration and verification.

Within 2 business days after cross-correlation testing, submit ProVAL profiler certification analysis report for cross-correlation test results performed on test section to the Engineer and to the electronic mailbox address:

smoothness@dot.ca.gov

39-1.01C(13)(d) Inertial Profiler Data

Within 2 business days after each day of inertial profiling, submit profile data to the Engineer and to the electronic mailbox address:

smoothness@dot.ca.gov

The profiling data must include:

1. Raw profile data for each lane.
2. ProVAL ride quality analysis report for the International Roughness Index of left and right wheel paths of each lane. Submit this report in pdf file format.
3. ProVAL ride quality analysis report for the Mean Roughness Index of each lane. Submit this report in pdf file format.
4. ProVAL smoothness assurance analysis report for the International Roughness Index of left wheel path. Submit this report in pdf file format.
5. ProVAL smoothness assurance analysis report for the International Roughness Index of right wheel path. Submit this report in pdf file format.
6. GPS data file for each lane in GPS eXchange. Submit data file in GPS eXchange file format.
7. Manufacturer's recommended inertial profiler calibration and verification test results.
8. Inertial profiler calibration and verification test results including bounce, block, and distance measurement instrument.

Submit the raw profile data in unfiltered electronic pavement profile file (PPF) format. Name the PPF file using the following naming convention:

YYYYMMDD_TTCCCRRR_D_L_W_S_E_X_PT.PPF

where:
YYYY = year
MM = Month, leading zero
DD = Day of month, leading zero
TT = District, leading zero
CCC = County, 2 or 3 letter abbreviation as shown in section 1-1.08
RRR = Route number, no leading zeros
D = Traffic direction as NB, SB, WB, or EB
L = Lane number from left to right in direction of travel
W = Wheel path as "L" for left, "R" for right, or "B" for both
S = Beginning station to the nearest foot (i.e., 10+20) or beginning post mile to the nearest hundredth (i.e., 25.06) no leading zero

E = Ending station to the nearest foot (i.e., 14+20) or ending post mile to the nearest hundredth (i.e., 28.06) no leading zero
X = Profile description as "EXIST" for existing pavement, "INTER" for after prepaving smoothness correction, "PAVE" for after paving, and "CORR" for after final surface pavement correction
PT = HMA pavement type

39-1.01C(13)(e) Reserved

39-1.01C(14)–39-1.01C(15) Reserved

39-1.01D Quality Control and Assurance

39-1.01D(1) General

When testing under AASHTO T 324 (Modified), test under AASHTO T 324 with the following parameters:

1. Target air voids must equal 7 ± 1 percent
2. Specimen height must be 60 ± 1 mm
3. Number of test specimens must be 4 (2 test sets)
4. Do not average test sets
5. Test specimen must be a 150 mm gyratory compacted specimen
6. Test temperature must be set at:
   6.1. 113 ± 2 degrees F for PG 58
   6.2. 122 ± 2 degrees F for PG 64
   6.3. 131 ± 2 degrees F for PG 70 and above
7. Measurements for impression must be taken at every 100 passes
8. Inflection point defined as the number of wheel passes at the intersection of the creep slope and the stripping slope
9. Testing shut off must be set at 25,000 passes

Take samples under California Test 125.

HMA samples may be heated a maximum of 2 times for up to 4 hours each.

39-1.01D(2) Job Mix Formula Verification

The Engineer verifies the JMF from samples taken from HMA produced by the plant to be used. Notify the Engineer at least 2 business days before sampling materials. Samples may be taken from a different project including a non-Department project, if you make arrangements for the Engineer to be present during sampling.

In the Engineer's presence and from the same production run, take samples of:

1. Aggregate. Coarse, fine, and supplemental fine aggregate must be taken from the combined cold feed belt, or hot bins. If lime treatment is required, samples must be taken from individual stockpiles before lime treatment. Samples must be at least 120 lb for each coarse aggregate, 80 lb for each fine aggregate, and 10 lb for each type of supplemental fines. For hot bin samples, the Department combines these aggregate samples to comply with the TV submitted on a Contractor Job Mix Formula Proposal form.
2. Asphalt binder. Take 2 samples minimum. Each sample must be in a 1-quart cylindrical-shaped can with an open top and friction lid. If the asphalt binder is modified or rubberized, the asphalt binder must be sampled with the components blended in the proportions to be used.
3. RAP. RAP samples must be at least 50 lb from each fractionated stockpile used or 100 lb from the belt.
4. Plant-produced HMA. The HMA samples must be at least 250 lb.

For aggregate, RAP, and HMA, split the samples into at least 4 parts and label their containers. Three parts are for the Department's verification testing and 1 part is for your testing.

After acceptance of the JMF submittal, the Engineer verifies each proposed JMF within 20 days of receiving all verification samples.

For JMF verification, the Engineer tests the following for compliance with the specifications:

1. Aggregate quality

2. Aggregate gradation
3. Voids in mineral aggregate on laboratory-produced HMA must comply with the mix design specifications for voids in mineral aggregate
4. HMA quality characteristics for Department acceptance

To verify the HMA for air voids, voids in mineral aggregate, and dust proportion, the Engineer uses an average of 3 briquettes. The Engineer tests plant-produced material.

If the Engineer verifies the JMF, the Engineer furnishes you a Hot Mix Asphalt Verification form.

If the Engineer's test results on plant-produced samples do not show compliance with the specifications, the Engineer notifies you. Adjust your JMF based on your testing unless the Engineer authorizes reverification without adjustments. JMF adjustments may include a change in:

1. Asphalt binder content target value up to ±0.2 percent from the OBC value submitted on Contractor Hot Mix Asphalt Design Data form
2. Aggregate gradation target values within the target value limits specified in the aggregate gradation table

You may adjust the JMF only once due to a failed verification test.

For each HMA type and aggregate size specified, the Engineer verifies up to 2 proposed JMF submittals including a JMF adjusted after verification failure. If you submit more than 2 JMFs for each type of HMA and aggregate size, the Engineer deducts $3,000 from payments for each verification exceeding this limit. This deduction does not apply to verifications initiated by the Engineer or if a JMF expires while HMA production is stopped longer than 30 days.

A verified JMF is valid for 12 months.

39-1.01D(3) Job Mix Formula Authorization

You may start HMA production if:

1. The Engineer's review of the JMF shows compliance with the specifications
2. The Department has verified the JMF within 12 months before HMA production
3. The Engineer authorizes the verified JMF

39-1.01D(4) Job Mix Formula Renewal

For a JMF renewal and upon request, in the Engineer's presence and from the same production run, take samples of:

1. Aggregate. Coarse, fine, and supplemental fine aggregate must be taken from combined cold-feed belt, or hot bins. If lime treatment is required, samples must be taken from individual stockpiles before lime treatment. Samples must be at least 120 lb for each coarse aggregate, 80 lb for each fine aggregate, and 10 lb for each type of supplemental fines. For hot bins, the Department combines these aggregate samples to comply with the TV submitted on a Contractor Job Mix Formula Proposal form.
2. Asphalt binder. Take 2 samples minimum. Each sample must be in a 1-quart cylindrical-shaped can with an open top and friction lid. If the asphalt binder is modified or rubberized, the asphalt binder must be sampled with the components blended in the proportions to be used.
3. RAP. RAP samples must be at least 50 lb from each fractionated stockpile.
4. Plant-produced HMA. The HMA samples must be at least 250 lb.

Notify the Engineer at least 2 business days before sampling materials. For aggregate, RAP, and HMA, split samples into at least 4 parts. Submit 3 parts to the Engineer and use 1 part for your testing.

Allow the Engineer 5 business days from a complete JMF reverification submittal for document review of the aggregate qualities, mix design, and JMF.

The most recent aggregate quality test results within the past 12 months may be used for verification of JMF renewal or upon request, the Engineer may perform aggregate quality tests for verification of JMF renewal.

The Engineer verifies the JMF for renewal under section 39-1.01D(2) except:

1. The Engineer keeps the samples until you provide test results for your part on a Contractor Job Mix Formula Renewal form.
2. The Department tests samples of materials obtained from the HMA production unit after you submit test results that comply with the mix design specifications.
3. After completion of the JMF verification renewal document review, the Engineer verifies each proposed JMF within 20 days of receiving the verification renewal samples and the complete Contractor Job Mix Formula Renewal form.
4. You may not adjust the JMF due to a failed verification.
5. For each HMA type and aggregate gradation specified, the Engineer verifies at no cost to you 1 proposed JMF renewal within a 12-month period.

If the Engineer verifies the JMF renewal, the Engineer furnishes you a Hot Mix Asphalt Verification form. The Hot Mix Asphalt Verification form is valid for 12 months.

39-1.01D(5) Job Mix Formula Modification

The Engineer verifies the modified JMF after the modified JMF HMA is placed on the project and verification samples are taken within the first 750 tons. The Engineer tests verification samples for compliance with:

1. Hamburg wheel track mix design specifications
2. Air void content
3. Voids in mineral aggregate on plant-produced HMA mix design specifications
4. Dust proportion mix design specifications

The Engineer may test for moisture susceptibility for compliance with the mix design specifications.

If the modified JMF is verified, the Engineer revises your Hot Mix Asphalt Verification form to include the new asphalt binder source, new liquid antistrip producer, or new liquid antistrip dosage. Your revised form will have the same expiration date as the original form.

If a modified JMF is not verified, stop production and any HMA placed using the modified JMF is rejected.

The Engineer deducts $2,000 from payments for each JMF modification.

39-1.01D(6) Certifications

39-1.01D(6)(a) General

Laboratories testing aggregate and HMA qualities used to prepare the mix design and JMF must be qualified under AASHTO Materials Reference Laboratory program and the Department's Independent Assurance Program.

39-1.01D(6)(b) Hot Mix Asphalt Plants

Before production, the HMA plant must have a current qualification under the Department's Material Plant Quality Program.

39-1.01D(6)(c) Inertial Profiler Certifications

The inertial profiler equipment must display a current certification decal with expiration date.

The inertial profiler operator and device certifications must be not more than 12 months old.

The operator must be certified for each different model of inertial profiler device operated.

39-1.01D(6)(d)–39-1.01D(6)(e) Reserved

39-1.01D(7) Prepaving Meeting

Meet with the Engineer at a prepaving meeting at a mutually agreed time and place. Discuss the QC plan and the methods of performing HMA production and paving work.

The following personnel must attend the prepaving meeting:

1. Project manager

2. Superintendent
3. HMA plant manager
4. HMA paving foreman

If a warm mix asphalt technology is used, a technical representative for warm mix asphalt technology must attend the prepaving meeting.

39-1.01D(8) Quality Control

39-1.01D(8)(a) General

QC test results must comply with the specifications for Department acceptance.

Prepare 3 briquettes for air voids content and voids in mineral aggregate determination. Report the average of 3 tests.

Except for smoothness, if 2 consecutive QC test results or any 3 QC test results for 1 day's production do not comply with the materials specifications:

1. Stop HMA production
2. Notify the Engineer
3. Take corrective action
4. Demonstrate compliance with the specifications before resuming production and placement

For QC tests performed under AASHTO T 27, results are considered 1 QC test regardless of number of sieves out of compliance.

Do not resume production and placement until the Engineer authorizes your corrective action proposal.

39-1.01D(8)(b) Reserved

39-1.01D(8)(c) Aggregate

39-1.01D(8)(c)(i) General

Reserved

39-1.01D(8)(c)(ii) Aggregate Lime Treatments

If lime treatment is required, sample coarse and fine aggregate from individual stockpiles before lime treatment. Combine aggregate in the JMF proportions. Test the aggregate under the test methods and frequencies shown in the following table:

Aggregate Quality Control During Lime Treatment

Quality characteristic	Test method	Minimum sampling and testing frequency
Sand equivalent[a, b]	AASHTO T 176	1 per 750 tons of untreated aggregate
Percent of crushed particles	AASHTO T 335	1 per 10,000 tons or 2 per project whichever is greater
Los Angeles Rattler	AASHTO T 96	
Fine aggregate angularity	AASHTO T 304 Method A	
Flat and elongated particles	ASTM D4791	

[a]Report test results as the average of 3 tests from a single sample.
[b]Use of a sand reading indicator is required as shown in AASHTO T 176, Figure 1. Sections 4.7, 4.8, 7.1.2, abd 8.4.3 do not apply.

For lime slurry aggregate treatment, determine the aggregate moisture content at least once every 2 hours of treatment. Calculate moisture content under AASHTO T 329 and report it as a percent of dry aggregate weight. Use the moisture content calculations as a set point for the proportioning process controller.

The device controlling lime and aggregate proportioning must produce a treatment data log. The log consists of a series of data sets captured at 10-minute intervals throughout daily treatment. The data must be a treatment activity register and not a summation. The material represented by a data set is the quantity produced 5 minutes before and 5 minutes after the capture time. For the duration of the Contract, collected data must be stored by the controller.

If 3 consecutive sets of recorded treatment data indicate a deviation of more than 0.2 percent above or below the lime ratio in the accepted JMF, stop treatment and take corrective action.

If a set of recorded treatment data indicates a deviation of more than 0.4 percent above or below the lime ratio in the accepted JMF, stop treatment and do not use the material represented by that set of data in HMA.

If 20 percent or more of the total daily treatment indicates a deviation of more than 0.2 percent above or below the lime ratio in the accepted JMF, stop treatment and do not use that day's treated aggregate in HMA.

The Engineer may order you to stop aggregate treatment activities for any of following:

1. You fail to submit treatment data log
2. You fail to submit aggregate QC data for marinated aggregate
3. You submit incomplete, untimely, or incorrectly formatted data
4. You do not take corrective actions
5. You take late or unsuccessful corrective actions
6. You do not stop treatment when proportioning tolerances are exceeded
7. You use malfunctioning or failed proportioning devices

If you stop treatment for noncompliance, notify the Engineer of any corrective actions taken and conduct a successful 20-minute test run before resuming treatment.

39-1.01D(8)(d) Liquid Antistrip Treatment

For continuous mixing or batch-plant mixing, sample asphalt binder before adding liquid antistrip. For continuous mixing, sample the combined asphalt binder and liquid antistrip after the static mixer.

39-1.01D(8)(e) Production Start-up Evaluation

You and the Engineer evaluate HMA production and placement at production start-up.

Within the first 750 tons produced on the 1st day of HMA production, in the Engineer's presence, and from the same production run, take samples of:

1. Aggregate
2. Asphalt binder
3. RAP
4. HMA

Sample aggregate from the combined cold-feed belt or hot bin. Take RAP samples from the RAP system.

For aggregate, RAP, and HMA, split the samples into at least 4 parts and label their containers. Submit 3 parts to the Engineer and keep 1 part.

You and the Engineer must test the samples and report test results, except for AASHTO T 324 (Modified) and AASHTO T 283 test results, within 5 business days of sampling. For AASHTO T 324 (Modified) and AASHTO T 283 test results, report test results within 15 days of sampling. If you proceed before receipt of the test results, the Engineer may consider the HMA placed to be represented by these test results.

Take one 4- or 6-inch diameter density core for each 250 tons or portion thereof of HMA placed. For each density core, the Engineer reports the bulk specific gravity determined under AASHTO T 275, Method A, in addition to the percent of theoretical maximum density.

39-1.01D(8)(f) Hot Mix Asphalt Density

During HMA placement determine HMA density using a nuclear gauge. On the 1st day of production, develop a correlation factor between cores and nuclear gauge under California Test 375.

Test for in-place density using cores and a nuclear gauge. Test at random locations you select and include the test results in your QC production tests reports.

39-1.01D(8)(g) Tapered Notched Wedge

Perform QC testing on the completed tapered notched wedge joint as follows:

1. Perform field compaction tests at the rate of 1 test for each 750-foot section along the joint. Select random locations for testing within each 750-foot section.
2. Perform field compaction tests at the centerline of the joint, 6 inches from the upper vertical notch, after the adjacent lane is placed and before opening the pavement to traffic.
3. Determine theoretical maximum density.
4. Determine percent compaction of the longitudinal joint as the ratio of the daily average of the field compaction values and the maximum density test results.

Determine percent compaction values each day the tapered notched wedge joint is completed. If the percent compaction of 1 day's production is less than 91 percent, that day's notched wedge joint is rejected. Discontinue placement of the tapered notched wedge and notify the Engineer of changes you will make to your construction process in order to comply with the specifications.

39-1.01D(8)(h) Density Cores

To determine density, take 4- or 6-inch diameter density cores at least once every 5 business days. Take 1 density core for every 250 tons of HMA from random locations the Engineer designates. Take density cores in the Engineer's presence and backfill and compact holes with authorized material. Before submitting a density core, mark it with the density core's location and place it in a protective container.

If a density core is damaged, replace it with a density core taken within 1 foot longitudinally from the original density core. Relocate any density core located within 1 foot of a rumble strip to 1 foot transversely away from the rumble strip.

For a tapered notched wedge joint, take 4- or 6-inch diameter density cores 6 inches from the upper vertical notch of the completed longitudinal joint for every 3,000 feet at locations designated by the Engineer. Take cores after the adjacent lane is placed and before opening the pavement to traffic. Cores must be taken in the presence of the Engineer and backfill and compact holes with authorized material. Before submitting a density core, mark it with the core's location and place it in a protective container.

39-1.01D(8)(i) Reserved

39-1.01D(8)(j) Pavement Smoothness

39-1.01D(8)(j)(i) General

Test pavement smoothness using an inertial profiler except use a 12-foot straightedge for the HMA pavement at the following locations:

1. Traffic lanes less than 1,000 feet in length including ramps, turn lanes, and acceleration and deceleration lanes
2. HMA pavement within 3 feet from and parallel to the construction joint formed between curbs, gutters, or existing pavement
3. Areas within 15 feet of manholes
4. Shoulders
5. Weigh-in-motion areas
6. Miscellaneous areas such as medians, gore areas, turnouts, and maintenance pullouts

Where inertial profiler testing is required, pavement smoothness for each lane must be determined by the International Roughness Index for the left and right wheel paths in an individual lane and then averaging the results. The average of the International Roughness Index values from the left and right wheel paths for the same lane is the Mean Roughness Index of the lane. The wheel paths are a pair of lines 3 feet from and parallel to the edge of a lane. Left and right wheel paths are based on the direction of travel.

Where inertial profiler testing is required, identify areas of localized roughness. Areas of localized roughness must be identified using the FHWA's engineering software ProVAL smoothness assurance analysis by calculating continuous International Roughness Index values for each wheel path with a 25-foot interval using a 250 mm filter.

Collect profiling data under AASHTO R 56 and analyze data using 250 mm and International Roughness Index filters.

39-1.01D(8)(j)(ii) Inertial Profiler Calibration and Verification Tests

Operate the inertial profiler according to the manufacturer's instructions and AASHTO R 57 at 1-inch recording intervals.

Notify the Engineer 2 business days before performing inertial profiler calibration and verification testing.

Conduct the following inertial profiler calibration and verification tests in the Engineer's presence each day before performing inertial profiling:

1. Block test. Verify the height sensor accuracy under California Test 387.
2. Bounce test. Verify the combined height sensor and accelerometer accuracy under California Test 387.
3. Distance measurement instrument test. Calibrate the accuracy of the testing procedure under California Test 387.
4. Manufacturer's recommended tests.

Conduct cross-correlation inertial profiler verification test in the Engineer's presence before performing initial profiling. Verify cross-correlation inertial profiler verification test at least annually. Conduct 5 repeat runs of the inertial profiler on an authorized test section. The test section must be on an existing asphalt concrete pavement surface 0.1 mile long. Calculate a cross-correlation to determine the repeatability of your device under California Test 387 using ProVAL profiler certification analysis with a 3 feet maximum offset. The cross-correlation must be a minimum of 0.92.

For each 0.1 mile section, your International Roughness Index values must be within 10 percent of the Department's International Roughness Index values. The Engineer may order you to recalibrate your inertial profiler equipment and reprofile. If your results are inaccurate due to operator error, the Engineer may disqualify your inertial profiler operator.

39-1.01D(8)(j)(iii) Smoothness Testing

Notify the Engineer of start location by station and start time at least 2 business days before profiling.

Remove foreign objects on the pavement surface before profiling.

Mark the beginning and ending station on the pavement shoulder before profiling. Stationing must be the same when profiling more than one surface.

While collecting the profile data to determine the International Roughness Index values, record the following locations in the raw profile data:

1. Begin and end of all bridge approach slabs
2. Begin and end of all bridges
3. Begin and end of all culverts visible on the roadway surface

Determine the Mean Roughness Index for 0.1-mile fixed sections using the ProVAL ride quality analysis with a 250 mm filter. Profile the left and right wheel paths of each lane. Calculate the Mean Roughness Index of each lane. A partial section less than 0.1 mile that is the result of an interruption to continuous pavement surface must comply with the Mean Roughness Index specifications for a full section. Adjust the Mean Roughness Index for a partial section to reflect a full section based on the proportion of a section paved.

Determine the areas of localized roughness using a continuous International Roughness Index for each wheel path with a 25-foot interval using a 250 mm filter.

Pavement smoothness must comply with the specifications in section 39-1.01D(9)(c).

39-1.01D(9) Department Acceptance

39-1.01D(9)(a) General

The Department tests treated aggregate for acceptance before lime treatment except for gradation.

The Engineer takes HMA samples for AASHTO T 283 and AASHTO T 324 (Modified) from one of the following:

1. Automatic sampling device at the plant
2. Automatic sampling device at the truck
3. Windrow

The Engineer takes HMA samples for all other tests from one of the following:

1. Automatic sampling device at the plant
2. Automatic sampling device at the truck
3. Windrow
4. Mat behind the paver

The Engineer's sampling and testing is independent of your QC sampling and testing.

If you request, the Engineer splits samples and provides you with a part.

No single test result may represent more than 750 tons or one day's production, whichever is less, excluding AASHTO T 283 and AASHTO T 324 (Modified).

Except for smoothness, if 2 consecutive Department acceptance test results or any 3 Department acceptance test results for 1 day's production do not comply with the specifications:

1. Stop HMA production
2. Take corrective action
3. Demonstrate compliance with the specifications before resuming production and placement

The Engineer accepts HMA based on:

1. Authorized JMF
2. Authorized QC plan
3. Asphalt binder compliance
4. Asphalt emulsion compliance
5. Visual inspection
6. Pavement smoothness

39-1.01D(9)(b) In-Place Density

The Engineer tests the density core you take from each 250 tons of HMA. The Engineer determines the percent of theoretical maximum density for each density core by determining the density core's density and dividing by the theoretical maximum density.

The Department determines the percent of maximum theoretical density from density cores if any of the following applies:

1. 1/2-inch, 3/8-inch, or no. 4 aggregate gradation is used and the specified total paved thickness is greater than 0.15 foot and any layer is less than 0.15 foot.
2. 3/4-inch aggregate gradation is used and the specified total paved thickness is greater than 0.20 foot and any layer is less than 0.20 foot.

Density cores must be taken from the final layer, cored to the specified total paved thickness.

If the percent of theoretical maximum density does not comply with the specifications, the Engineer may accept the HMA and take a payment deduction.

For acceptance of a completed tapered notched wedge joint, the Engineer determines density from cores based on:

1. Field compaction by measuring the bulk specific gravity of the cores under AASHTO T 275, Method A
2. Percent compaction as the ratio of the average of the bulk specific gravity of the core for each day's production to the maximum density test value

39-1.01D(9)(c) Pavement Smoothness

For areas that require pavement smoothness determined using an inertial profiler, the pavement surface must:

1. Have no areas of localized roughness with an International Roughness Index greater than 160 in/mi
2. Comply with the Mean Roughness Index requirements shown in the following table for a 0.1 mile section:

HMA[a] Pavement Smoothness Acceptance Criteria

HMA thickness	Mean Roughness Index requirement
> 0.20 foot	60 in/mi or less
≤ 0.20 foot	75 in/mi or less

[a] Except OGFC

The final surface of HMA must comply with the Mean Roughness Index requirements before placing OGFC. Correct pavement to the Mean Roughness Index specifications. Localized roughness greater than 160 in/mi must be corrected regardless of the International Roughness Index values of a 0.1-mile section.

For areas that require pavement smoothness determined using a 12-foot straightedge, the HMA pavement surface must not vary from the lower edge of the straightedge by more than:

1. 0.01 foot when the straightedge is laid parallel with the centerline
2. 0.02 foot when the straightedge is laid perpendicular to the centerline and extends from edge to edge of a traffic lane
3. 0.02 foot when the straightedge is laid within 24 feet of a pavement conform

Pavement smoothness may be accepted based on your testing in the absence of the Department's testing.

39-1.01D(9)(d) Dispute Resolution

You and the Engineer must work together to avoid potential conflicts and to resolve disputes regarding test result discrepancies. Notify the Engineer within 5 business days of receiving a test result if you dispute the test result.

If you or the Engineer dispute each other's test results, submit QC test results and copies of paperwork including worksheets used to determine the disputed test results. An independent third party performs referee testing. Before the third party participates in a dispute resolution, it must be qualified under AASHTO Materials Reference Laboratory program, and the Department's Independent Assurance Program. The independent third party must have no prior direct involvement on this Contract. By mutual agreement, the independent third party is chosen from:

1. Department laboratory in a district or region not in the district or region the project is located
2. Transportation Laboratory
3. Laboratory not currently employed by you or your HMA producer

If split QC or acceptance samples are not available, the independent third party uses any available material representing the disputed HMA for evaluation.

If the independent third party determines the Department's test results are valid, the Engineer deducts the independent third party's testing costs from payments. If the independent third party determines your test results are valid, the Department pays the independent third party's testing costs.

39-1.02 MATERIALS

39-1.02A General

Reserved

39-1.02B Mix Design

39-1.02B(1) General

The HMA mix design must comply with AASHTO R 35 except:

1. Notes 3, 6, and 10 do not apply
2. AASHTO M 323 does not apply on combinations of aggregate gradation and asphalt binder contents to determine the OBC and HMA mixture qualities

The Contractor Hot Mix Asphalt Design Data form must show documentation on aggregate quality.

39-1.02B(2) Hot Mix Asphalt Treatments

If the test results for AASHTO T 283 or AASHTO T 324 (Modified) for untreated plant-produced HMA are less than the minimum requirements for HMA mix design, determine the plasticity index of the aggregate blend under California Test 204.

If the plasticity index is greater than 10, do not use that aggregate blend.

If the plasticity index is from 4 to 10, treat the aggregate with dry lime with marination or lime slurry with marination.

If the plasticity index is less than 4, treat the aggregate with dry lime or lime slurry with marination, or treat the HMA with liquid antistrip.

39-1.02B(3) Warm Mix Asphalt Technology

For HMA with warm mix asphalt additive technology, produce HMA mix samples for your mix design using your methodology for inclusion of warm mix asphalt admixture in laboratory-produced HMA. For warm mix asphalt water injection foam technology, the use of foamed asphalt for mix design is not required.

39-1.02C Asphalt Binder

Asphalt binder must comply with section 92.

For replace asphalt concrete surfacing or hot mix asphalt (leveling) the grade of asphalt binder for the HMA must be PG 64-10 or PG 64-16.

39-1.02D Aggregate

39-1.02D(1) General

Aggregate must be clean and free from deleterious substances.

The aggregate for replace asphalt concrete surfacing and hot mix asphalt (leveling) must comply with the gradation specifications for Type A HMA in section 39-2.02.

39-1.02D(2) Aggregate Gradations

Aggregate gradation must be determined before the addition of asphalt binder and must include supplemental fines. Test for aggregate gradation under AASHTO T 27. Note 4 of AASHTO T 27 and AASHTO T 11 do not apply. Use a mechanical sieve shaker. Aggregate shaking time must not exceed 10 minutes for each coarse and fine aggregate portion.

Choose a target value within the target value limits shown in the tables titled "Aggregate Gradations."

Gradations are based on nominal maximum aggregate size.

39-1.02D(3) Aggregate Lime Treatments

39-1.02D(3)(a) General

If aggregate lime treatment is required, virgin aggregate must comply with the aggregate quality specifications.

Lime for treating aggregate must comply with section 24-2.02B.

Water for lime treatment of aggregate with lime slurry must comply with section 24-2.02C.

Notify the Engineer at least 24 hours before the start of aggregate treatment.

Do not treat RAP.

The lime ratio is the pounds of dry lime per 100 lb of dry virgin aggregate expressed as a percentage. Water content of slurry or untreated aggregate must not affect the lime ratio.

Coarse and fine aggregate fractions must have the lime ratio ranges shown in the following table:

Aggregate fractions	Lime ratio percent
Coarse	0.4–1.0
Fine	1.5–2.0
Combined	0.8–1.5

The lime ratio for fine and coarse aggregate must be within ±0.2 percent of the lime ratio in the accepted JMF. The lime ratio must be within ±0.2 percent of the authorized lime ratio when you combine the individual aggregate sizes in the JMF proportions. The lime ratio must be determined before the addition of RAP.

If marination is required, marinate treated aggregate in stockpiles from 24 hours to 60 days before using in HMA. Do not use aggregate marinated longer than 60 days.

Treated aggregate must not have lime balls or clods.

39-1.02D(3)(b) Dry Lime

If marination is required:

1. Treat and marinate coarse and fine aggregates separately
2. Treat the aggregate and stockpile for marination only once
3. Treat the aggregate separate from HMA production

Proportion dry lime by weight with an automatic continuous proportioning system.

If you use a batch-type proportioning system for HMA production, control proportioning in compliance with the specifications for continuous mixing plants. Use a separate dry lime aggregate treatment system for HMA batch mixing including:

1. Pugmill mixer
2. Controller
3. Weigh belt for the lime
4. Weigh belt for the aggregate

If using a continuous mixing plant for HMA production without lime marinated aggregates, use a controller that measures the blended aggregate weight after any additional water is added to the mixture. The controller must determine the quantity of lime added to the aggregate from the aggregate weigh belt input in connection with the manually input total aggregate moisture, the manually input target lime content, and the lime proportioning system output. Use a continuous aggregate weigh belt and pugmill mixer for lime treatment in addition to the weigh belt for the aggregate proportioning to asphalt binder in the HMA plant. If you use a water meter for moisture control for lime treatment, the meter must comply with Department's Material Plant Quality Program manual.

At the time of mixing dry lime with aggregate, the aggregate moisture content must ensure complete lime coating. The aggregate moisture content must not cause aggregate to be lost between the point of weighing the combined aggregate continuous stream and the dryer. Add water to the aggregate for mixing and coating before dry lime addition. Immediately before mixing lime with aggregate, water must not visibly separate from the aggregate.

Mix aggregate, water, and dry lime with a continuous pugmill mixer with twin shafts. Immediately before mixing lime with aggregate, water must not visibly separate from the aggregate. Store dry lime in a uniform and free-flowing condition. Introduce dry lime to the pugmill in a continuous process. The introduction must occur after the aggregate cold feed and before the point of proportioning across a weigh belt and the aggregate dryer. Prevent loss of dry lime.

The pugmill must be equipped with paddles arranged to provide sufficient mixing action and mixture movement. The pugmill must produce a homogeneous mixture of uniformly coated aggregates at mixer discharge.

If the aggregate treatment process is stopped longer than 1 hour, clean the equipment of partially treated aggregate and lime.

Aggregate must be completely treated before introduction into the mixing drum.

39-1.02D(3)(c) Lime Slurry

For lime slurry aggregate treatment, treat aggregate separate from HMA production. Stockpile and marinate the aggregate.

Proportion lime and water with a continuous or batch mixing system.

Add lime to the aggregate as slurry consisting of mixed dry lime and water at a ratio of 1 part lime to from 2 to 3 parts water by weight. The slurry must completely coat the aggregate.

Immediately before mixing lime slurry with the aggregate, water must not visibly separate from the aggregate.

Proportion lime slurry and aggregate by weight in a continuous process.

39-1.02E Liquid Antistrip Treatment

Liquid antistrip must be from 0.25 to 1.0 percent by weight of asphalt binder. Do not use liquid antistrip as a substitute for asphalt binder.

Liquid antistrip total amine value must be 325 minimum when tested under ASTM D2074.

Use only 1 liquid antistrip type or brand at a time. Do not mix liquid antistrip types or brands.

Store and mix liquid antistrip under the manufacturer's instructions.

39-1.02F–39-1.02G Reserved

39-1.02H Hot Mix Asphalt Production

39-1.02H(1) General

Do not start HMA production before verification and authorization of JMF.

HMA plants must be Department-qualified. Before production, the HMA plant must have a current qualification under the Department's Materials Plant Quality Program.

For lime treated aggregate, the HMA plant must be equipped with a bag-house dust system. Material collected in the dust system must be returned to the mix.

Weighing and metering devices used for the production of HMA modified with additives must comply with the requirements of the Department's Material Plant Quality Program. If a loss-in-weight meter is used for dry HMA additive, the meter must have an automatic and integral material delivery control system for the refill cycle.

Calibrate the loss-in-weight meter by:

1. Including at least 1 complete system refill cycle during each calibration test run
2. Operating the device in a normal run mode for 10 minutes immediately before starting the calibration process
3. Isolating the scale system within the loss-in-weight feeder from surrounding vibration
4. Checking the scale system within the loss-in-weight feeder for accuracy before and after the calibration process and daily during mix production
5. Using a 15-minute or 250-pound-minimum test run size for a dry ingredient delivery rate of less than 1 ton per hour.
6. Complying with the limits of Table B, "Conveyor Scale Testing Extremes," in the Department's Material Plant Quality Program

Proportion aggregate by hot or cold-feed control. During production, you may adjust hot or cold-feed proportion controls for virgin aggregate and RAP.

Aggregate temperature must not be more than 375 degrees F when mixed with the asphalt binder. Temperature requirements do not apply to RAP.

Asphalt binder temperature must be from 275 to 375 degrees F when mixed with aggregate.

Mix HMA ingredients into a homogeneous mixture of coated aggregates.

HMA with or without RAP must not be more than 325 degrees F.

For HMA produced using warm mix asphalt technology, HMA must be at a temperature between 240 and 325 degrees F.

If method compaction is used, HMA must be produced at a temperature between 305 and 325 degrees F.

If you stop production for longer than 30 days, a production start-up evaluation is required.

39-1.02H(2) Liquid Antistrip

If 3 consecutive sets of recorded production data show actual delivered liquid antistrip weight is more than ±1 percent of the authorized mix design liquid antistrip weight, stop production and take corrective action.

If a set of recorded production data shows actual delivered liquid antistrip weight is more than ±2 percent of the authorized mix design liquid antistrip weight, stop production. If the liquid antistrip weight exceeds 1.2 percent of the asphalt binder weight, do not use the HMA represented by that data.

The continuous mixing plant controller proportioning the HMA must produce a production data log. The log consists of a series of data sets captured at 10-minute intervals throughout daily production. The data must be a production activity register and not a summation. The material represented by the data is the quantity produced 5 minutes before and 5 minutes after the capture time. For the duration of the Contract, collected data must be stored by the plant controller or a computer's memory at the plant.

The Engineer orders proportioning activities stopped for any of the following:

1. You do not submit data
2. You submit incomplete, untimely, or incorrectly formatted data
3. You do not take corrective actions
4. You take late or unsuccessful corrective actions
5. You do not stop production when proportioning tolerances are exceeded
6. You use malfunctioning or failed proportioning devices

If you stop production, notify the Engineer of any corrective actions taken before resuming.

39-1.02H(3) Warm Mix Asphalt Technology

Proportion all ingredients by weight. The HMA plant process controller must be the sole source of ingredient proportioning control and be fully interfaced with all scales and meters used in the production process. The addition of the HMA additive must be controlled by the plant process controller.

Liquid ingredient additive, including a normally dry ingredient made liquid, must be proportioned with a mass flow meter at continuous mixing plants. Use a mass flow meter or a container scale to proportion liquid additives at batch mixing plants.

Continuous mixing plants using HMA additives must comply with the following:

1. Dry ingredient additives for continuous production must be proportioned with a conveyor scale or a loss-in-weight meter.
2. HMA plant process controller and ingredient measuring systems must be capable of varying all ingredient feed rates proportionate with the dry aggregate delivery at all production rates and rate changes.
3. Liquid HMA additive must enter the production stream with the binder. Dry HMA additive must enter the production stream at or before the mixing area.

4. If dry HMA additives are used at continuous mixing HMA plants, baghouse dust systems must return all captured material to the mix.
5. HMA additive must be proportioned to within ±0.3 percent of the target additive rate.

Batch mixing plants using HMA additives must comply with the following:

1. Metered HMA additive must be placed in an intermediate holding vessel before being added to the stream of asphalt binder as it enters the pugmill.
2. If a container scale is used, weigh additive before combining with asphalt binder. Keep the container scale separate from other ingredient proportioning. The container scale capacity must be no more than twice the volume of the maximum additive batch size. The container scale's graduations must be smaller than the proportioning tolerance or 0.001 times the container scale capacity.
3. Dry HMA additive proportioning devices must be separate from metering devices for the aggregates and asphalt binder. Proportion dry HMA additive directly into the pugmill or place in an intermediate holding vessel to be added to the pugmill at the appropriate time in the batch cycle. Dry ingredients for batch production must be proportioned with a hopper scale.
4. Zero tolerance for the HMA additive batch scale is ±0.5 percent of the target additive weight. The indicated HMA additive batch scale weight may vary from the preselected weight setting by up to ±1.0 percent of the target additive weight.

39-1.02I Geosynthetic Pavement Interlayer

Geosynthetic pavement interlayer must comply with the specifications for pavement fabric, paving mat, paving grid, paving geocomposite grid, or geocomposite strip membrane as shown.

The asphalt binder for geosynthetic pavement interlayer must be PG 64-10, PG 64-16, or PG 70-10.

39-1.02J Tack Coat

Tack coat must comply with the specifications for asphaltic emulsion or asphalt binder. Choose the type and grade.

39-1.02K Miscellaneous Areas and Dikes

For miscellaneous areas and dikes:

1. Choose either the 3/8-inch or 1/2-inch aggregate gradation for Type A HMA.
2. Minimum asphalt binder content must be 6.8 percent for 3/8-inch aggregate and 6.0 percent for 1/2-inch aggregate. If you request and the Engineer authorizes, you may reduce the minimum asphalt binder content.
3. Choose asphalt binder Grade PG 64-10, PG 64-16 or PG 70-10.

For HMA used in miscellaneous areas and dikes, sections 39-1.01C, 39-1.01D, 39-1.02B, 39-1.02D(3), and 39-1.02E–J do not apply.

39-1.03 CONSTRUCTION

39-1.03A General

Do not place HMA on wet pavement or frozen surface.

You may deposit HMA in a windrow and load it in the paver if:

1. Paver is equipped with a hopper that automatically feeds the screed
2. Loading equipment can pick up the windrowed material and deposit it in the paver hopper without damaging base material
3. Activities for deposit, pickup, loading, and paving are continuous
4. HMA temperature in the windrow does not fall below 260 degrees F

HMA placed in a windrow on the roadway surface must not extend more than 150 feet in front of the loading equipment or material transfer vehicle.

You may place HMA in 1 or more layers on areas less than 5 feet wide and outside the traveled way, including shoulders. You may use mechanical equipment other than a paver for these areas. The equipment must produce uniform smoothness and texture.

HMA handled, spread, or windrowed must not stain the finished surface of any improvement, including pavement.

Do not use petroleum products such as kerosene or diesel fuel to release HMA from trucks, spreaders, or compactors.

HMA must be free of:

1. Segregation
2. Coarse or fine aggregate pockets
3. Hardened lumps

Where density or data core samples are taken, backfill and compact holes with authorized material.

Complete finish rolling activities before the pavement surface temperature is:

1. Below 150 degrees F for HMA with unmodified binder
2. Below 140 degrees F for HMA with modified binder
3. Below 130 degrees F for HMA with warm mix asphalt technology

39-1.03B Spreading and Compacting Equipment

39-1.03B(1) General

Paving equipment for spreading must be:

1. Self-propelled
2. Mechanical
3. Equipped with a screed or strike-off assembly that can distribute HMA the full width of a traffic lane
4. Equipped with a full-width compacting device
5. Equipped with automatic screed controls and sensing devices that control the thickness, longitudinal grade, and transverse screed slope

Install and maintain grade and slope references.

The screed must be heated and produce a uniform HMA surface texture without tearing, shoving, or gouging.

The paver must not leave marks such as ridges and indentations unless you can eliminate them by rolling.

Rollers must be equipped with a system that prevents HMA from sticking to the wheels. You may use a parting agent that does not damage the HMA or impede the bonding of layers.

In areas inaccessible to spreading and compacting equipment:

1. Spread the HMA by any means to obtain the specified lines, grades, and cross sections
2. Use a pneumatic tamper, plate compactor, or equivalent to achieve thorough compaction

39-1.03B(2) Material Transfer Vehicle

If a material transfer vehicle is specified, the material transfer vehicle must have sufficient capacity to prevent stopping the paver and must be capable of:

1. Either receiving HMA directly from trucks or using a windrow pickup head to load it from a windrow deposited on the roadway surface
2. Remixing the HMA with augers before transferring into the paver's receiving hopper or feed system
3. Transferring HMA directly into the paver's receiving hopper or feed system

39-1.03B(3) Method Compaction Equipment

For method compaction, each paver spreading HMA must be followed by 3 rollers:

1. One vibratory roller specifically designed to compact HMA. The roller must be capable of at least 2,500 vibrations per minute and must be equipped with amplitude and frequency controls. The roller's gross static weight must be at least 7.5 tons.

2. One oscillating type pneumatic-tired roller at least 4 feet wide. Pneumatic tires must be of equal size, diameter, type, and ply. The tires must be inflated to 60 psi minimum and maintained so that the air pressure does not vary more than 5 psi.
3. One steel-tired, 2-axle tandem roller. The roller's gross static weight must be at least 7.5 tons.

Each roller must have a separate operator. Rollers must be self-propelled and reversible.

39-1.03B(4)–39-1.03B(6) Reserved

39-1.03C Surface Preparation

39-1.03C(1) General

Before placing HMA, remove loose paving particles, dirt, and other extraneous material by any means including flushing and sweeping.

39-1.03C(2) Subgrade

Prepare subgrade to receive HMA under the sections for the material involved. Subgrade must be free of loose and extraneous material.

39-1.03C(3) Reserved

39-1.03C(4) Prepaving Inertial Profiler

Section 39-1.03C(4) applies to existing asphalt concrete surfaces receiving an HMA overlay if a bid item for prepaving inertial profiler is shown in the Bid Item List.

Before starting paving activities, perform prepaving inertial profiler measurements. Prepaving inertial profiler includes taking profiles of the existing pavement, analyzing the data with ProVAL to determine existing pavement International Roughness Index, Mean Roughness Index, and areas of localized roughness.

If the Contract includes cold planing, perform prepaving inertial profiler measurements before cold planning.

If the Contract includes replace asphalt concrete surfacing, perform prepaving inertial profiler measurements after replacing the asphalt concrete surfacing.

39-1.03C(5) Prepaving Grinding

Section 39-1.03C(5) applies to all existing asphalt concrete surfaces that will not be cold planned or milled and that will receive an HMA overlay less than or equal to 0.20 foot exclusive of OGFC if a bid item for prepaving grinding day is shown in the Bid Item List.

After performing prepaving inertial profiling, correct areas of localized roughness greater than 180 in/mi.

Prepaving grinding day includes correcting areas of localized roughness, taking profiles of the corrected areas, and submitting profile data as specified in section 39-1.01C(13)(d).

Notify the Engineer of those areas of localized roughness that cannot be corrected by prepaving grinding. The Engineer responds to your notification within 5 business days.

For those areas of localized roughness that cannot be corrected by grinding, the Engineer may order you to either (1) not correct the areas of localized roughness or (2) correct areas of localized roughness by a different method and take profiles of the corrected areas with an inertial profiler. Corrective work performed by a different method, including taking profiles of the corrected areas and associated traffic control, is change order work.

If ordered not to correct areas of localized roughness, the smoothness specifications do not apply to the final pavement surface placed in those areas.

Correct prepaving areas of localized roughness that you predict will cause the final surface of HMA pavement to be noncompliant with the smoothness specifications. After correcting prepaving areas of localized roughness, take profiles of the corrected area and submit profile data as specified in section 39-1.01C(13)(d).

Dispose of grinding residue.

Pave within 7 days of correcting areas.

The final pavement surface must comply with section 39-1.01D(9)(c).

If the Engineer determines more time is required for prepaving grinding than the Contract allows for and if prepaving grinding is a controlling activity, the Engineer makes a time adjustment.

39-1.03C(6) Tack Coat

Apply tack coat:

1. To existing pavement including planed surfaces
2. Between HMA layers
3. To vertical surfaces of:
   3.1. Curbs
   3.2. Gutters
   3.3. Construction joints

Before placing HMA, apply tack coat in 1 application at the minimum residual rate shown in the following table for the condition of the underlying surface:

Tack Coat Application Rates for HMA

HMA over:	Minimum Residual Rates (gal/sq yd)		
	CSS1/CSS1h, SS1/SS1h and QS1h/CQS1h Asphaltic Emulsion	CRS1/CRS2, RS1/RS2 and QS1/CQS1 Asphaltic Emulsion	Asphalt Binder and PMRS2/PMCRS2 and PMRS2h/PMCRS2h Asphaltic Emulsion
New HMA (between layers)	0.02	0.03	0.02
PCC and existing AC surfacing	0.03	0.04	0.03
Planed pavement	0.05	0.06	0.04

Notify the Engineer if you dilute asphaltic emulsion with water. The weight ratio of added water to asphaltic emulsion must not exceed 1 to 1.

Measure added water either by weight or volume under section 9-1.02 or you may use water meters from water districts, cities, or counties. If you measure water by volume, apply a conversion factor to determine the correct weight.

With each dilution, submit:

1. Weight ratio of water to bituminous material in the original asphaltic emulsion
2. Weight of asphaltic emulsion before diluting
3. Weight of added water
4. Final dilution weight ratio of water to asphaltic emulsion

Apply to vertical surfaces with a residual tack coat rate that will thoroughly coat the vertical face without running off.

If you request and the Engineer authorizes, you may:

1. Change tack coat rates
2. Omit tack coat between layers of new HMA during the same work shift if:
   2.1. No dust, dirt, or extraneous material is present
   2.2. Surface is at least 140 degrees F

Immediately in advance of placing HMA, apply additional tack coat to damaged areas or where loose or extraneous material is removed.

Close areas receiving tack coat to traffic. Do not track tack coat onto pavement surfaces beyond the job site.

Asphalt binder tack coat temperature must be from 285 to 350 degrees F when applied.

39-1.03C(7) Geosynthetic Pavement Interlayer

If specified, place geosynthetic pavement interlayer over a coat of asphalt binder. Place geosynthetic pavement interlayer in compliance with the manufacturer's instructions.

Before placing the geosynthetic pavement interlayer and asphalt binder:

1. Repair cracks 1/4 inch and wider, spalls, and holes in the pavement. Repairing cracks is change order work.
2. Clean the pavement of loose and extraneous material.

Immediately before placing the interlayer, apply 0.25 ± 0.03 gallon of asphalt binder per square yard of interlayer or until the fabric is saturated. Apply asphalt binder the width of the geosynthetic pavement interlayer plus 3 inches on each side. At an interlayer overlap, apply asphalt binder on the lower interlayer the same overlap distance as the upper interlayer.

Align and place the interlayer with no overlapping wrinkles, except a wrinkle that overlaps may remain if it is less than 1/2 inch thick. If the overlapping wrinkle is more than 1/2 inch thick, cut the wrinkle out and overlap the interlayer no more than 2 inches.

The minimum HMA thickness over the interlayer must be 0.12 foot thick including conform tapers. Do not place the interlayer on a wet or frozen surface.

Overlap the interlayer borders between 2 to 4 inches. In the direction of paving, overlap the following roll with the preceding roll at any break.

You may use rolling equipment to correct distortions or wrinkles in the interlayer.

If asphalt binder tracked onto the interlayer or brought to the surface by construction equipment causes interlayer displacement, cover it with a small quantity of HMA.

Before placing HMA on the interlayer, do not expose the interlayer to:

1. Traffic except for crossings under traffic control and only after you place a small HMA quantity
2. Sharp turns from construction equipment
3. Damaging elements

Pave HMA on the interlayer during the same work shift.

39-1.03D Longitudinal Joints

39-1.03D(1) General

Longitudinal joints in the top layer must match lane lines. Alternate the longitudinal joint offsets in the lower layers at least 0.5 foot from each side of the lane line. You may request other longitudinal joint placement patterns.

A vertical longitudinal joint of more than 0.15 foot is not allowed at any time between adjacent lanes open to traffic.

For HMA thickness of 0.15 foot or less, the distance between the ends of the adjacent surfaced lanes at the end of each day's work must not be greater than can be completed in the following day of normal paving.

For HMA thickness greater than 0.15 foot, you must place HMA on adjacent traveled way lanes or shoulder so that at the end of each work shift the distance between the ends of HMA layers on adjacent lanes is from 5 to 10 feet. Place additional HMA along the transverse edge at each lane's end and along the exposed longitudinal edges between adjacent lanes. Hand rake and compact the additional HMA to form temporary conforms. You may place kraft paper or other authorized release agent under the conform tapers to facilitate the taper removal when paving activities resume.

If placing HMA against the edge of existing pavement, sawcut or grind the pavement straight and vertical along the joint and remove extraneous material.

39-1.03D(2) Tapered Notched Wedge

For divided highways with an HMA lift thickness greater than 0.15 foot, you may construct a 1-foot wide tapered notched wedge joint as a longitudinal joint between adjacent lanes open to traffic. A vertical notch of 0.75 inch maximum must be placed at the top and bottom of the tapered wedge.

The tapered notched wedge must retain its shape while exposed to traffic. Pave the adjacent lane within 1 day.

Construct the tapered portion of the tapered notched wedge with an authorized strike-off device. The strike-off device must provide a uniform slope and must not restrict the main screed of the paver.

You may use a device attached to the screed to construct longitudinal joints that will form a tapered notched wedge in a single pass. The tapered notched wedge must be compacted to a minimum of 91 percent compaction.

39-1.03E Edge Treatments

Construct edge treatment on the HMA pavement as shown.

Where a safety edge is required, use the same type of HMA used for the adjacent lane or shoulder.

The edge of roadway where the safety edge treatment is to be placed must have a solid base, free of debris such as loose material, grass, weeds, or mud. Grade areas to receive the safety edge as required.

The safety edge treatment must be placed monolithic with the adjacent lane or shoulder and shaped and compacted with a device attached to the paver.

The device must be capable of shaping and compacting HMA to the required cross section as shown. Compaction must be by constraining the HMA to reduce the cross sectional area by 10 to 15 percent. The device must produce a uniform surface texture without tearing, shoving, or gouging and must not leave marks such as ridges and indentations. The device must be capable of transition to cross roads, driveways, and obstructions.

For safety edge treatment, the angle of the slope must not deviate by more than ±5 degrees from the angle shown. Measure the angle from the plane of the adjacent finished pavement surface.

If paving is done in multiple lifts, the safety edge treatment must be placed with each lift.

Short sections of hand work are allowed to construct transitions for safety edge treatment.

39-1.03F Widening Existing Pavement

If widening existing pavement, construct new pavement structure to match the elevation of the existing pavement's edge before placing HMA over the existing pavement.

39-1.03G Shoulders, Medians, and Other Road Connections

Until the adjoining through lane's top layer has been paved, do not pave the top layer of:

1. Shoulders
2. Tapers
3. Transitions
4. Road connections
5. Driveways
6. Curve widenings
7. Chain control lanes
8. Turnouts
9. Turn pockets

If the number of lanes changes, pave each through lane's top layer before paving a tapering lane's top layer. Simultaneous to paving a through lane's top layer, you may pave an adjoining area's top layer, including shoulders. Do not operate spreading equipment on any area's top layer until completing final compaction.

If shoulders or median borders are shown, pave shoulders and median borders adjacent to the lane before opening a lane to traffic.

If shoulder conform tapers are shown, place conform tapers concurrently with the adjacent lane's paving.

If a driveway or a road connection is shown, place additional HMA along the pavement's edge to conform to road connections and driveways. Hand rake, if necessary, and compact the additional HMA to form a smooth conform taper.

39-1.03H Leveling

Section 39-1.03H applies if a bid item for hot mix asphalt (leveling), is shown on the Bid Item List.

Fill and level irregularities and ruts with HMA before spreading HMA over the base, existing surfaces, or bridge decks. You may use mechanical equipment other than a paver for these areas. The equipment must produce uniform smoothness and texture. HMA used to change an existing surface's cross slope or profile is not paid for as hot mix asphalt (leveling).

39-1.03I Miscellaneous Areas and Dikes

Prepare the area to receive HMA for miscellaneous areas and dikes, including excavation and backfill as needed.

Spread miscellaneous areas in 1 layer and compact to the specified lines and grades.

In median areas adjacent to slotted median drains, each layer of HMA must not exceed 0.20 foot maximum compacted thickness.

The finished surface must be:

1. Textured uniformly
2. Compacted firmly
3. Without depressions, humps, and irregularities

39-1.03J Replace Asphalt Concrete Surfacing

Where replace asphalt concrete surfacing is shown, remove existing asphalt concrete surfacing and replace with HMA. The Engineer determines the exact limits of asphalt concrete surfacing to be replaced.

Replace asphalt concrete in a lane before the lane is specified to be opened to traffic.

Before removing asphalt concrete, outline the replacement area and cut neat lines with a saw or grind to full depth of the existing asphalt concrete. Do not damage asphalt concrete and base remaining in place.

If the base is excavated beyond the specified plane, replace it with HMA. The Department does not pay for this HMA.

Do not use a material transfer vehicle if replace asphalt concrete surfacing is specified.

39-1.03K–39-1.03N Reserved

39-1.03O Compaction

39-1.03O(1) General

Rolling must leave the completed surface compacted and smooth without tearing, cracking, or shoving.

If a vibratory roller is used as a finish roller, turn the vibrator off.

Do not open new HMA pavement to traffic until the surface temperature is below 130 degrees F.

If the surface to be paved is both in sunlight and shade, pavement surface temperatures are taken in the shade.

39-1.03O(2) Method Compaction

Use method compaction for any of the following conditions:

1. Specified paved thickness is less than 0.15 foot
2. Specified paved thickness is less than 0.20 foot and a 3/4-inch aggregate gradation is specified and used
3. Specified paved thickness is less than 0.25 foot and a 1-inch aggregate gradation is specified and used

4. Replace asphalt concrete surfacing
5. Leveling courses
6. Areas the Engineer determines conventional compaction and compaction measurement methods are impeded

HMA compaction coverage is the number of passes needed to cover the paving width. A pass is 1 roller's movement parallel to the paving in either direction. Overlapping passes are part of the coverage being made and are not a subsequent coverage. Do not start a coverage until completing the prior coverage.

Method compaction must consist of performing:

1. Breakdown compaction of each layer with 3 coverages using a vibratory roller. The speed of the vibratory roller in miles per hour must not exceed the vibrations per minute divided by 1,000. If the HMA layer thickness is less than 0.08 foot, turn the vibrator off.
2. Intermediate compaction of each layer of HMA with 3 coverages using a pneumatic-tired roller at a speed not to exceed 5 mph.
3. Finish compaction of HMA with 1 coverage using a steel-tired roller.

Start rolling at the lower edge and progress toward the highest part.

The Engineer may order fewer coverages if the layer thickness of HMA is less than 0.15 foot.

39-1.03O(3)–39-1.03O(5) Reserved

39-1.03P Smoothness Corrections

If the final surface of the pavement does not comply with the smoothness specifications, grind the pavement to within specified tolerances, remove and replace it, or place an overlay of HMA. Do not start corrective work until your method is authorized.

Do not use equipment with carbide cutting teeth to grind the pavement unless authorized.

Smoothness correction of the final pavement surface must leave at least 75 percent of the specified HMA thickness. If ordered, core the pavement at the locations determined by the Engineer. Coring, including traffic control, is change order work. Remove and replace deficient pavement areas where the overlay thickness is less than 75 percent of the thickness specified as determined by the Engineer.

Corrected HMA pavement areas must be uniform rectangles with edges:

1. Parallel to the nearest HMA pavement edge or lane line
2. Perpendicular to the pavement centerline

On ground areas not to be overlaid with OGFC, apply fog seal coat under section 37-2.

Where corrections are made within areas requiring testing with inertial profiler, reprofile the entire lane length with the inertial profiler device.

Where corrections are made within areas requiring testing with a 12-foot straightedge, retest the corrected area with the straightedge.

39-1.03Q Data Cores

Section 39-1.03Q applies if a bid item for data core is shown on the Bid Item List.

Take data cores of the completed HMA pavement, underlying base, and subbase material. Notify the Engineer 3 business days before coring.

Protect data cores and surrounding pavement from damage.

Take 4-inch or 6-inch diameter data cores:

1. At the beginning, end, and every 1/2 mile within the paving limits of each route on the project
2. After all paving is complete
3. From the center of the specified lane

On a 2-lane roadway, take data cores from either lane. On a 4-lane roadway, take data cores from each direction in the outermost lane. On a roadway with more than 4 lanes, take data cores from the median lane and the outermost lane in each direction.

Each core must include the stabilized materials encountered. You may choose not to recover unstabilized material but you must identify the material. Unstabilized material includes:

1. Granular material
2. Crumbled or cracked stabilized material
3. Sandy or clayey soil

After data core summary and photograph submittal, dispose of cores.

39-1.04 PAYMENT

Geosynthetic pavement interlayer is measured by the square yard for the actual pavement area covered.

If tack coat, asphalt binder, and asphaltic emulsion are paid as separate bid items, their bid items are measured under section 92 or section 94.

The Department does not adjust the unit price for an increase or decrease in the tack coat quantity.

HMA of the type shown in the Bid Item List is measured based on the combined mixture weight. If recorded batch weights are printed automatically, the bid item for HMA is measured by using the printed batch weights, provided:

1. Total aggregate and supplemental fine aggregate weight per batch is printed. If supplemental fine aggregate is weighed cumulatively with the aggregate, the total aggregate batch weight must include the supplemental fine aggregate weight.
2. Total asphalt binder weight per batch is printed.
3. Each truckload's zero tolerance weight is printed before weighing the first batch and after weighing the last batch.
4. Time, date, mix number, load number and truck identification is correlated with a load slip.
5. Copy of the recorded batch weights is certified by a licensed weigh master and submitted.

Place hot mix asphalt dike of the type shown in the Bid Item List is measured along the completed length. Payment for the HMA used to construct the dike is not included in the payment for place hot mix asphalt dike.

Place hot mix asphalt (miscellaneous areas) is measured as the in-place compacted area. Payment for the HMA used for miscellaneous areas is not included in the payment for place hot mix asphalt (miscellaneous areas).

If replace asphalt concrete surfacing is shown, the bid item for replace asphalt concrete is measured based on the specified dimensions and any adjustments ordered.

The Department does not adjust the unit price for an increase or decrease in the prepaving grinding day quantity.

The Department reduces payment for noncompliance of HMA density based on the factors shown in the following table:

Reduced Payment Factors for Percent of Maximum Theoretical Density

HMA percent of maximum theoretical density	Reduced payment factor	HMA percent of maximum theoretical density	Reduced payment factor
91.0	0.0000	97.0	0.0000
90.9	0.0125	97.1	0.0125
90.8	0.0250	97.2	0.0250
90.7	0.0375	97.3	0.0375
90.6	0.0500	97.4	0.0500
90.5	0.0625	97.5	0.0625
90.4	0.0750	97.6	0.0750
90.3	0.0875	97.7	0.0875
90.2	0.1000	97.8	0.1000
90.1	0.1125	97.9	0.1125
90.0	0.1250	98.0	0.1250
89.9	0.1375	98.1	0.1375
89.8	0.1500	98.2	0.1500
89.7	0.1625	98.3	0.1625
89.6	0.1750	98.4	0.1750
89.5	0.1875	98.5	0.1875
89.4	0.2000	98.6	0.2000
89.3	0.2125	98.7	0.2125
89.2	0.2250	98.8	0.2250
89.1	0.2375	98.9	0.2375
89.0	0.2500	99.0	0.2500
< 89.0	Remove and replace	> 99.0	Remove and replace

39-2 TYPE A HOT MIX ASPHALT

39-2.01 GENERAL

39-2.01A Summary

Section 39-2 includes specifications for producing and placing Type A hot mix asphalt.

You may produce Type A HMA using an authorized warm mix asphalt technology.

39-2.01B Definitions

Reserved

39-2.01C Submittals

39-2.01C(1) General

Reserved

39-2.01C(2) Job Mix Formula

The JMF must be based on an HMA mix design determined as described in the Superpave Mix Design SP-2 Manual by the Asphalt Institute.

39-2.01C(3) Reclaimed Asphalt Pavement

Submit QC test results for RAP gradation with the combined aggregate gradation within 2 business days of taking RAP samples during HMA production.

39-2.01C(4)–39-2.01C(6) Reserved

39-2.01D Quality Control and Assurance

39-2.01D(1) General

Reserved

39-2.01D(2) Quality Control

39-2.01D(2)(a) General

Reserved

39-2.01D(2)(b) Aggregate

Test the quality characteristics of aggregate under the test methods and frequencies shown in the following table:

Aggregate Testing Frequencies

Quality characteristic	Test method	Minimum testing frequency
Gradation[a]	AASHTO T 27	1 per 750 tons and any remaining part
Sand equivalent[b, c]	AASHTO T 176	
Moisture content[d]	AASHTO T 329	
Crushed particles	AASHTO T 335	1 per 10,000 tons or 2 per project whichever is greater
Los Angeles rattler	AASHTO T 96	
Flat and elongated particles	ASTM D4791	
Fine aggregate angularity	AASHTO T 304 Method A	

[a]If RAP is used, test the combined aggregate gradation under California Test 384.
[b]Reported value must be the average of 3 tests from a single sample.
[c]Use of a sand reading indicator is required as shown in AASHTO T 176, Figure 1. Sections 4.7, 4.8, 7.1.2, 8.4.2 and 8.4.3 do not apply.
[d]Test at continuous mixing plants only. If RAP is used, test the RAP moisture content at continuous mixing plant and batch mixing plant.

For lime treated aggregate, test aggregate before treatment and test for gradation and moisture content during HMA production.

39-2.01D(2)(c) Reclaimed Asphalt Pavement

Sample and test processed RAP at a minimum frequency of 1 sample per 1000 tons with a minimum of 6 samples per fractionated stockpile. If a fractionated RAP stockpile is augmented, sample and test processed RAP quality characteristics at a minimum frequency of 1 sample per 500 tons of augmented RAP.

The combined RAP sample when tested under AASHTO T 164 must be within ±2.0 percent of the average asphalt binder content reported on page 4 of your Contractor Hot Mix Asphalt Design Data form. If new fractionated RAP stockpiles are required, the average binder content of the new fractionated RAP stockpile must be within ±2.0 percent of the average binder reported on page 4 of your Contractor Hot Mix Asphalt Design Data form.

The combined RAP sample when tested under AASHTO T 209 must be within ±0.06 of the average maximum specific gravity reported on page 4 of your Contractor Hot Mix Asphalt Design Data form.

During HMA production, sample RAP twice daily and perform QC testing for:

1. Aggregate gradation at least once a day under California Test 384
2. Moisture content at least twice a day

39-2.01D(2)(d) Hot Mix Asphalt Production

Test the quality characteristics of HMA under the test methods and frequencies shown in the following table:

Hot Mix Asphalt Testing Frequencies

Quality characteristic	Test method	Minimum testing frequency
Asphalt binder content	AASHTO T 308 Method A	1 per 750 tons and any remaining part
HMA moisture content	AASHTO T 329	1 per 2,500 tons but not less than 1 per paving day
Air voids content	AASHTO T 269	1 per 4,000 tons or 2 every 5 paving days, whichever is greater
Voids in mineral aggregate	SP-2 Asphalt Mixture Volumetrics	1 per 10,000 tons or 2 per project whichever is greater
Dust proportion	SP-2 Asphalt Mixture Volumetrics	
Density of core	California Test 375	2 per paving day
Nuclear gauge density	California Test 375	3 per 250 tons or 3 per paving day, whichever is greater
Hamburg wheel track	AASHTO T 324 (Modified)	1 per 10,000 tons or 1 per project, whichever is greater
Moisture susceptibility	AASHTO T 283	

39-2.01D(3)–39-2.01D(4) Reserved

39-2.01D(5) Department Acceptance

The Department accepts Type A HMA based on compliance with:

1. Aggregate quality requirements shown in the following table:

Aggregate Quality

Quality characteristic	Test method	Requirement
Aggregate gradation[a]	AASHTO T 27	JMF ± Tolerance
Percent of crushed particles Coarse aggregate (min, %) One-fractured face Two-fractured faces Fine aggregate (min, %) (Passing No. 4 sieve and retained on No. 8 sieve.) One fractured face	AASHTO T 335	 95 90 70
Los Angeles Rattler (max, %) Loss at 100 Rev. Loss at 500 Rev.	AASHTO T 96	 12 40
Sand equivalent (min.)[b, c]	AASHTO T 176	47
Flat and elongated particles (max, % by weight at 5:1)	ASTM D4791	10
Fine aggregate angularity (min, %)[d]	AASHTO T 304 Method A	45

[a]The Engineer determines combined aggregate gradations containing RAP under California Test 384.
[b]Reported value must be the average of 3 tests from a single sample.
[c]Use of a sand reading indicator is required as shown in AASHTO T 176, Figure 1. Sections 4.7, 4.8, 7.1.2, 8.4.2 and 8.4.3 do not apply.
[d] The Engineer waives this specification if HMA contains 10 percent or less of nonmanufactured sand by weight of total aggregate. Manufactured sand is fine aggregate produced by crushing rock or gravel.

2. If RAP is used, RAP quality requirements shown in the following table:

Reclaimed Asphalt Pavement Quality

Quality characteristic	Test method	Requirement
Binder content (% within the average value reported)	AASHTO T 164	±2.0
Specific gravity (within the average value reported)	AASHTO T 209	±0.06

3. In-place HMA quality requirements shown in the following table:

Type A HMA Acceptance In Place

Quality characteristic	Test method	Requirement
Asphalt binder content (%)	AASHTO T 308 Method A	JMF -0.3, +0.5
HMA moisture content (max, %)	AASHTO T 329	1
Air voids content at N_{design} (%)[a, b]	AASHTO T 269	4 ± 1.5
Voids in mineral aggregate on plant-produced HMA (min, %)[a]	SP-2 Asphalt Mixture Volumetrics[c]	
Gradation:		
No. 4		15.5–18.5
3/8-inch		14.5–17.5
1/2-inch		13.5–16.5
3/4-inch		12.5–15.5
1-inch		
with NMAS[g] = 1-inch		12.5–15.5
with NMAS[g] = 3/4-inch		13.5–16.5
Dust proportion	SP-2 Asphalt Mixture Volumetrics	0.6–1.3
Density of core (% of max theoretical density)[e, f]	California Test 375	91–97
Hamburg wheel track (min number of passes at 0.5-inch rut depth)	AASHTO T 324 (Modified)	
Binder grade:		
PG 58		10,000
PG 64		15,000
PG 70		20,000
PG 76 or higher		25,000
Hamburg wheel track (min number of passes at inflection point)	AASHTO T 324 (Modified)	
Binder grade:		
PG 58		10,000
PG 64		10,000
PG 70		12,500
PG 76 or higher		15,000
Moisture susceptibility (min, psi, dry strength)	AASHTO T 283	100
Moisture susceptibility (min, psi, wet strength)	AASHTO T 283	70

[a]Prepare 3 briquettes. Report the average of 3 tests.
[b]The Engineer determines the bulk specific gravity of each lab-compacted briquette under AASHTO T 275, Method A, and theoretical maximum specific gravity under AASHTO T 209, Method A.
[c]Determine bulk specific gravity under AASHTO T 275, Method A.
[d]The Engineer determines the laboratory-prepared HMA value for mix design verification only.
[e]The Engineer determines percent of theoretical maximum density under California Test 375 except the Engineer uses:

1. AASHTO T 275 to determine in-place density of each density core
2. AASHTO T 209, Method A to determine theoretical maximum density instead of calculating test maximum density

[f]The Engineer determines theoretical maximum density under AASHTO T 209, Method A, at the frequency specified in California Test 375, Part 5. D.
[g]NMAS means nominal maximum aggregate size.

39-2.02 MATERIALS

39-2.02A General

Reserved

39-2.02B Mix Design

The mix design must comply with the requirements shown in the following table:

Type A HMA Mix Design Requirements

Quality characteristic	Test method	Requirement
Air voids content (%)	AASHTO T 269[a]	$N_{initial}$ > 8.0 N_{design} = 4.0 (N_{design} = 5.0 for 1-inch aggregate) N_{max} > 2.0
Gyration compaction (no. of gyrations)	AASHTO T 312	$N_{initial}$ = 8 N_{design} = 85.0 N_{max} = 130
Voids in mineral aggregate (min, %)[b] Gradation: No. 4 3/8-inch 1/2-inch 3/4-inch 1-inch with NMAS[e] = 1-inch with NMAS[e] = 3/4-inch	SP-2 Asphalt Mixture Volumetrics	 16.5–19.5 15.5–18.5 14.5–17.5 13.5–16.5 13.5–16.5 14.5–17.5
Dust proportion	SP-2 Asphalt Mixture Volumetrics	0.6–1.3
Hamburg wheel track (min number of passes at 0.5-inch rut depth) Binder grade: PG 58 PG 64 PG 70 PG 76 or higher	AASHTO T 324 (Modified)[c]	 10,000 15,000 20,000 25,000
Hamburg wheel track (min number of passes at the inflection point) Binder grade: PG 58 PG 64 PG 70 PG 76 or higher	AASHTO T 324 (Modified)[c]	 10,000 10,000 12,500 15,000
Moisture susceptibility, dry strength (min, psi)	AASHTO T 283[c]	100
Moisture susceptibility, wet strength (min, psi)	AASHTO T 283[c, d]	70

[a]Calculate the air voids content of each specimen using AASHTO T 275, Method A, to determine bulk specific gravity. Use AASHTO T 209, Method A, to determine theoretical maximum specific gravity. Use a digital manometer and pycnometer when performing AASHTO T 209.
[b]Measure bulk specific gravity using AASHTO T 275, Method A.
[c]Test plant produced HMA.
[d]Freeze thaw required.
[e]NMAS means nominal maximum aggregate size.

For HMA mixtures using RAP, the maximum binder replacement is 25.0 percent for surface course and 40.0 percent for lower courses.

For HMA with a binder replacement percent less than or equal to 25 percent of your specified OBC, you may request that the performance graded asphalt binder grade with upper and lower temperature classifications be reduced by 6 degrees C from the specified grade.

For HMA with a binder replacement greater than 25 percent of your specified OBC and less than or equal to 40 percent of OBC, you must use a performance graded asphalt binder grade with upper and lower temperature classifications reduced by 6 degrees C from the specified grade.

39-2.02C Asphalt Binder

Reserved

39-2.02D Aggregates

39-2.02D(1) General

Before the addition of asphalt binder and lime treatment, the aggregate must comply with the requirements shown in the following table:

Aggregate Quality

Quality characteristic	Test method	Requirement
Percent of crushed particles Coarse aggregate (min, %) One-fractured face Two-fractured faces Fine aggregate (min, %) (Passing No. 4 sieve and retained on No. 8 sieve.) One fractured face	AASHTO T 335	 95 90 70
Los Angeles Rattler (max, %) Loss at 100 Rev. Loss at 500 Rev.	AASHTO T 96	 12 40
Sand equivalent (min)[a, b]	AASHTO T 176	47
Flat and elongated particles (max, % by weight at 5:1)	ASTM D4791	10
Fine aggregate angularity (min, %)[c]	AASHTO T 304 Method A	45

[a]Reported value must be the average of 3 tests from a single sample.
[b]Use of a Sand Reader Indicator is required as shown in AASHTO T 176, Figure 1. Sections 4.7, 4.8, 7.1.2, 8.4.2 and 8.4.3 do not apply.
[c] The Engineer waives this specification if HMA contains 10 percent or less of nonmanufactured sand by weight of total aggregate, except if your JMF fails verification. Manufactured sand is fine aggregate produced by crushing rock or gravel.

39-2.02D(2) Aggregate Gradations

The aggregate gradations for Type A HMA must comply with the requirements shown in the following table:

Aggregate Gradation Requirements

Type A HMA pavement thickness	Gradation
0.10 foot	3/8 inch
Greater than 0.10 to less than 0.20 foot	1/2 inch
0.20 foot and greater	3/4 inch
0.30 foot or greater	1 inch

Aggregate gradation must be within the target value limits for the specified sieve size shown in the following tables:

Aggregate Gradations
(Percentage Passing)

1-inch

Sieve size	Target value limit	Allowable tolerance
1"	100	--
3/4"	88–93	TV ± 5
1/2"	72–85	TV ± 6
3/8"	55–70	TV ± 6
No. 4	35–52	TV ± 7
No. 8	22–40	TV ± 5
No. 30	8–24	TV ± 4
No. 50	5–18	TV ± 4
No. 200	3–7	TV ± 2

3/4-inch

Sieve size	Target value limit	Allowable tolerance
1"	100	--
3/4"	90–98	TV ± 5
1/2"	70–90	TV ± 6
No. 4	42–58	TV ± 5
No. 8	29–43	TV ± 5
No. 30	10–23	TV ± 4
No. 200	2–7	TV ± 2

1/2-inch

Sieve sizes	Target value limit	Allowable tolerance
3/4"	100	--
1/2"	95–98	TV ± 5
3/8"	72–95	TV ± 5
No. 4	52–69	TV ± 5
No. 8	35–55	TV ± 5
No. 30	15–30	TV ± 4
No. 200	2–8	TV ± 2

3/8-inch

Sieve sizes	Target value limits	Allowable tolerance
1/2"	100	--
3/8"	95–98	TV ± 5
No. 4	55–75	TV ± 5
No. 8	30–50	TV ± 5
No. 30	15–35	TV ± 5
No. 200	2–9	TV ± 2

No. 4

Sieve sizes	Target value limits	Allowable tolerance
3/8"	100	--
No. 4	95–98	TV ± 5
No. 8	70–80	TV ± 6
No. 30	34–45	TV ± 5
No. 200	2–12	TV ± 4

39-2.02E Reclaimed Asphalt Pavement

You may substitute RAP for part of the virgin aggregate in a quantity up to a maximum of 25 percent of the aggregate blend.

Provide enough space for meeting all RAP handling requirements at your facility. Provide a clean, graded base, well drained area for stockpiles.

If RAP is from multiple sources, blend the RAP thoroughly and completely before fractionating.

For RAP substitution of 15 percent or less, fractionation is not required.

For RAP substitution greater than 15 percent, fractionate RAP stockpiles into 2 sizes, a coarse fraction RAP retained on 3/8-inch sieve, and a fine fraction RAP passing 3/8-inch sieve.

The RAP fractionation must comply with the requirements shown in the following table:

RAP Stockpile Fractionation Gradation Requirements

Quality characteristic	Test method	Requirement
Coarse (% passing the 1-inch sieve)	California Test 202[a]	100
Fine (% passing the 3/8-inch sieve)	California Test 202[a]	98–100

[a]Maximum mechanical shaking time is 10 minutes

You may use the coarse fractionated stockpile, the fine fractionated stockpile, or a combination of the coarse and fine fractionated stockpiles.

Isolate the processed RAP stockpiles from other materials. Store processed RAP in conical or longitudinal stockpiles. Processed RAP must not be agglomerated or be allowed to congeal in large stockpiles.

39-2.02F Hot Mix Asphalt Production

If RAP is used, the asphalt binder set point target value for HMA with RAP must be:

$$\text{Asphalt Binder Set Point Target Value} = \frac{\dfrac{BC_{OBC}}{\left(1 - \dfrac{BC_{OBC}}{100}\right)} - R_{RAP}\left[\dfrac{BC_{RAP}}{\left(1 - \dfrac{BC_{RAP}}{100}\right)}\right]}{100 + \dfrac{BC_{OBC}}{\left(1 - \dfrac{BC_{OBC}}{100}\right)}} \times 100$$

Where:
BC_{OBC} = optimum asphalt binder content, percent based on total weight of mix
R_{RAP} = RAP ratio by weight of aggregate
BC_{RAP} = asphalt binder content of RAP, percent based on total weight of RAP mix

39-2.03 CONSTRUCTION

Spread Type A HMA at the atmospheric and surface temperatures shown in the following table:

Minimum Atmospheric and Surface Temperatures for Type A HMA

Compacted layer thickness, feet	Atmospheric,°F		Surface,°F	
	Unmodified asphalt binder	Modified asphalt binder	Unmodified asphalt binder	Modified asphalt binder
< 0.15	55	50	60	55
0.15 – 0.25	45	45	50	50

For Type A HMA placed under method compaction, if the asphalt binder is:

1. Unmodified, complete:

1.1. 1st coverage of breakdown compaction before the surface temperature drops below 250 degrees F
1.2. Breakdown and intermediate compaction before the surface temperature drops below 190 degrees F
1.3. Finish compaction before the surface temperature drops below 150 degrees F

2. Modified, complete:
2.1. 1st coverage of breakdown compaction before the surface temperature drops below 240 degrees F
2.2. Breakdown and intermediate compaction before the surface temperature drops below 180 degrees F
2.3. Finish compaction before the surface temperature drops below 140 degrees F

If you request and the Engineer authorizes, you may cool Type A HMA with water when rolling activities are complete. Apply water under section 17.

39-2.04 PAYMENT

Not Used

39-3 RUBBERIZED HOT MIX ASPHALT–GAP GRADED

39-3.01 GENERAL

39-3.01A Summary

Section 39-3 includes specifications for producing and placing rubberized hot mix asphalt–gap graded.

You may produce RHMA-G using a warm mix asphalt technology.

39-3.01B Definitions

Reserved

39-3.01C Submittals

39-3.01C(1) General

Reserved

39-3.01C(2) Job Mix Formula

With your proposed JMF include MSDS for:

1. Base asphalt binder
2. CRM and asphalt modifier
3. Blended asphalt rubber binder components

The JMF must be based on an HMA mix design determined as described in the Superpave Mix Design SP-2 Manual by the Asphalt Institute.

39-3.01C(3) Asphalt Rubber Binder

Submit a proposal for asphalt rubber binder design and profile. In the design, include the asphalt binder, asphalt modifier, and CRM and their proportions.

If you change asphalt rubber binder supplier or any component material used in asphalt rubber binder or its percentage, submit a new JMF.

For the asphalt rubber binder used, submit:

1. Log of production daily.
2. Certificate of compliance with test results for CRM and asphalt modifier with each truckload delivered to the HMA plant. The certificate of compliance for asphalt modifier must represent no more than 5,000 lb.
3. Submit certified weight slips for the CRM and asphalt modifier furnished.

Submit a certificate of compliance for the asphalt rubber binder. With the certificate of compliance, submit test results for CRM and asphalt modifier with each truckload delivered to the HMA plant. A certificate of compliance for asphalt modifier must not represent more than 5,000 lb.

39-3.01D Quality Control and Assurance

39-3.01D(1) General

Reserved

39-3.01D(2) Job Mix Formula Verification

If you request, the Engineer verifies RHMA-G quality requirements within 7 days of receiving all verification samples and after the JMF document submittal has been accepted.

39-3.01D(3) Quality Control

39-3.01D(3)(a) General

Reserved

39-3.01D(3)(b) Asphalt Rubber Binder

39-3.01D(3)(b)(i) General

The asphalt rubber binder blending plant must be authorized under the Department's Material Plant Quality Program.

Take asphalt rubber binder samples from the feed line connecting the asphalt rubber binder tank to the HMA plant. Use an AASHTO-certified laboratory for testing.

39-3.01D(3)(b)(ii) Asphalt Modifier

Test asphalt modifier under the test methods and frequencies shown in the following table:

Asphalt Modifier for Asphalt Rubber Binder

Quality characteristic	Test method	Frequency
Viscosity	ASTM D445	1 per shipment
Flash point	ASTM D92	
Molecular Analysis		
Asphaltenes	ASTM D2007	1 per shipment
Aromatics	ASTM D2007	

39-3.01D(3)(b)(iii) Crumb Rubber Modifier

Sample and test scrap tire CRM and high natural CRM separately. Test CRM under the test methods and frequencies shown in the following table:

Crumb Rubber Modifier for Asphalt Rubber Binder

Quality characteristic	Test method	Frequency
Scrap tire CRM gradation	California Test 385	1 per 10,000 lb
High natural CRM gradation	California Test 385	1 per 3,400 lb
Wire in CRM	California Test 385	1 per 10,000 lb
Fabric in CRM	California Test 385	
CRM particle length	--	
CRM specific gravity	California Test 208	
Natural rubber content in high natural CRM	ASTM D297	1 per 3,400 lb

Sample and test scrap tire CRM and high natural CRM separately.

39-3.01D(3)(b)(iv) Asphalt Rubber Binder

Test asphalt rubber binder under the test methods and frequencies shown in the following table:

Quality characteristic	Test method	Frequency
Cone penetration	ASTM D217	1 per lot
Resilience	ASTM D5329	
Softening point	ASTM D36	
Viscosity	ASTM D7741	1 per hour

39-3.01D(3)(c) Aggregate

Test the quality characteristics of aggregate under the test methods and frequencies shown in the following table:

Aggregate Testing Frequencies

Quality characteristic	Test method	Minimum testing frequency
Gradation	AASHTO T 27	1 per 750 tons and any remaining part
Sand equivalent[a, b]	AASHTO T 176	
Moisture content[c]	AASHTO T 329	
Crushed particles	AASHTO T 335	1 per 10,000 tons or 2 per project, whichever is greater
Los Angeles rattler	AASHTO T 96	
Flat and elongated particles	ASTM D4791	
Fine aggregate angularity	AASHTO T 304 Method A	

[a]Reported value must be the average of 3 tests from a single sample.
bUse of a sand reading indicator is required as shown in AASHTO T 176, Figure 1. Sections 4.7, 4.8, 7.1.2, 8.4.2 and 8.4.3 do not apply.
[c]Test at continuous mixing plants only

For lime treated aggregate, test aggregate before treatment and test for gradation and moisture content during RHMA-G production.

39-3.01D(3)(d) Hot Mix Asphalt Production

Test the quality characteristics of RHMA-G under the test methods and frequencies shown in the following table:

RHMA-G Mix Asphalt Testing Frequencies

Quality characteristic	Test method	Minimum testing frequency
Asphalt binder content	AASHTO T 308 Method A	1 per 750 tons and any remaining part
HMA moisture content	AASHTO T 329	1 per 2,500 tons but not less than 1 per paving day
Air voids content	AASHTO T 269	1 per 4,000 tons or 2 every 5 paving days, whichever is greater
Voids in mineral aggregate	SP-2 Asphalt Mixture Volumetrics	1 per 10,000 tons or 2 per project whichever is greater
Dust proportion	SP-2 Asphalt Mixture Volumetrics	
Density of core	California Test 375	2 per paving day
Nuclear gauge density	California Test 375	3 per 250 tons or 3 per paving day, whichever is greater
Hamburg wheel track	AASHTO T 324 (Modified)	1 per 10,000 tons or 1 per project, whichever is greater
Moisture susceptibility	AASHTO T 283	

39-3.01D(4) Reserved

39-3.01D(5) Department Acceptance

39-3.01D(5)(a) General

The Department accepts RHMA-G based on compliance with:

1. Aggregate quality requirements shown in the following table:

Aggregate Quality

Quality characteristic	Test method	Requirement
Aggregate gradation	AASHTO T 27	JMF ± Tolerance
Percent of crushed particles Coarse aggregate (min, %) One-fractured face Two-fractured faces Fine aggregate (min, %) (Passing No. 4 sieve and retained on No. 8 sieve.) One fractured face	AASHTO T 335	 -- 90 70
Los Angeles Rattler (max, %) Loss at 100 Rev. Loss at 500 Rev.	AASHTO T 96	 12 40
Sand equivalent (min)[a, b]	AASHTO T 176	47
Flat and elongated particles (max, % by weight at 5:1)	ASTM D4791	Report only
Fine aggregate angularity (min, %)[c]	AASHTO T 304 Method A	45

[a]Reported value must be the average of 3 tests from a single sample.
[b]Use of a sand reading Indicator is required as shown in AASHTO T 176, Figure 1. Sections 4.7, 4.8, 7.1.2, 8.4.2 and 8.4.3 do not apply.
[c] The Engineer waives this specification if RHMA-G contains 10 percent or less of nonmanufactured sand by weight of total aggregate. Manufactured sand is fine aggregate produced by crushing rock or gravel.

2. In-place RHMA-G quality requirements shown in the following table:

RHMA-G In-Place Acceptance

Quality characteristic	Test method	Requirement
Asphalt binder content (%)	AASHTO T 308 Method A	JMF -0.4, +0.5
HMA moisture content (max, %)	AASHTO T 329	1
Air voids content @ N_{design} (%)[a, b]	AASHTO T 269	4.0 ± 1.5
Voids in mineral aggregate on laboratory-produced HMA[d] (min, %) Gradation: 1/2-inch and 3/4-inch	SP-2 Asphalt Mixture Volumetrics[c]	 18.0–23.0
Voids in mineral aggregate on plant-produced HMA (min, %)[a] Gradation: 1/2-inch and 3/4-inch	SP-2 Asphalt Mixture Volumetrics[c]	 18.0–23.0
Dust proportion[a]	SP-2 Asphalt Mixture Volumetrics	Report only
Density of core (% of max theoretical density)[e, f]	California Test 375	91–97
Hamburg wheel track (min number of passes at 0.5-inch rut depth) Binder grade: PG 58 PG 64 PG 70	AASHTO T 324 (Modified)	 15,000 20,000 25,000
Hamburg wheel track (min number of passes at inflection point) Binder grade: PG 58 PG 64 PG 70	AASHTO T 324 (Modified)	 10,000 12,500 15,000
Moisture susceptibility (min, psi, dry strength)	AASHTO T 283	100
Moisture susceptibility (min, psi, wet strength)	AASHTO T 283	70

[a]Prepare 3 briquettes. Report the average of 3 tests.
[b]The Engineer determines the bulk specific gravity of each lab-compacted briquette under AASHTO T 275, Method A, and theoretical maximum specific gravity under AASHTO T 209, Method A.
[c]Determine bulk specific gravity under AASHTO T 275, Method A.
[d]The Engineer determines the laboratory-prepared RHMA-G value for mix design verification only.
[e]The Engineer determines percent of theoretical maximum density under California Test 375 except the Engineer uses:

1. AASHTO T 275, Method A, to determine in-place density of each density core instead of using the nuclear gauge
2. AASHTO T 209, Method A to determine theoretical maximum density instead of calculating test maximum density.

[f]The Engineer determines theoretical maximum density under AASHTO T 209, Method A, at the frequency specified in California Test 375, Part 5. D.

39-3.01D(5)(b) Asphalt Rubber Binder

39-3.01D(5)(b)(i) General

The Department does not use asphalt rubber binder design profile for production acceptance.

39-3.01D(5)(b)(ii) Asphalt Modifier

The Department accepts asphalt modifier based on compliance with the requirements shown in the following table:

Asphalt Modifier for Asphalt Rubber Binder

Quality characteristic	Test method	Requirement
Viscosity at 100 °C ($m^2/s \times 10^{-6}$)	ASTM D445	X ± 3[a]
Flash point (min, °C)	ASTM D92	207
Molecular Analysis		
Asphaltenes (max, % by mass (max)	ASTM D2007	0.1
Aromatics (min % by mass)	ASTM D2007	55

[a]The symbol "X" is the asphalt modifier viscosity.

39-3.01D(5)(b)(iii) Crumb Rubber Modifier

The Department accepts scrap tire CRM and high natural CRM based on compliance with the requirements shown in the following table:

Crumb Rubber Modifier for Asphalt Rubber Binder

Quality characteristic	Test method	Requirement
Scrap tire CRM gradation (% passing No. 8 sieve)	California Test 385	100
High natural CRM gradation (% passing No. 10 sieve)	California Test 385	100
Wire in CRM (max, %)	California Test 385	0.01
Fabric in CRM (max, %)	California Test 385	0.05
CRM particle length (max, in)	--	3/16
CRM specific gravity	California Test 208	1.1–1.2

Scrap tire CRM and high natural CRM are sampled and tested separately.

39-3.01D(5)(b)(iv) Asphalt Rubber Binder

The Department accepts asphalt rubber binder based on compliance with the requirements shown in the following table:

Quality characteristic	Test method	Requirement
Cone penetration at 25 °C (0.10 mm)	ASTM D217	25–70
Resilience at 25 °C (min, % rebound)	ASTM D5329	18
Softening point (°C)	ASTM D36	52–74
Viscosity at 190 °C (centipoises)	ASTM D7741	1,500–4,000

39-3.01D(5)(c)–39-3.01D(5)(f) Reserved

39-3.02 MATERIALS

39-3.02A General

Reserved

39-3.02B Mix Design

For RHMA-G, the mix design must comply with the requirements shown in the following table:

RHMA-G Mix Design Requirements

Quality characteristic	Test method	Requirement
Air voids content (%)	AASHTO T 269[a]	N_{design} = 4.0
Gyration compaction (no. of gyrations	AASHTO T 312	N_{design} = 50–150[b]
Voids in mineral aggregate (min, %)	SP-2 Asphalt Mixture Volumetrics[c]	18.0–23.0
Dust proportion	SP-2 Asphalt Mixture Volumetrics	Report only
Hamburg wheel track (min number of passes at 0.5-inch rut depth) Binder grade: PG 58 PG 64 PG 70	AASHTO T 324 (Modified)[d]	 15,000 20,000 25,000
Hamburg wheel track (min number of passes at the inflection point) Binder grade: PG 58 PG 64 PG 70	AASHTO T 324 (Modified)[d]	 10,000 10,000 12,500
Moisture susceptibility, dry strength (min, psi)	AASHTO T 283[d]	100
Moisture susceptibility, wet strength (min, psi)	AASHTO T 283[d, e]	70

[a]Calculate the air voids content of each specimen using AASHTO T 275, Method A, to determine bulk specific gravity and AASHTO T 209, Method A, to determine theoretical maximum specific gravity. Under AASHTO T 209 use a digital manometer and pycnometer when performing AASHTO T 209.
[b]Superpave gyratory compactor ram pressure may be increased to a maximum of 825kPa, and specimens may be held at a constant height for a maximum of 90 minutes.
[c]Measure bulk specific gravity using AASHTO T 275, Method A.
[d]Test plant produced HMA.
[e]Freeze thaw required.

Determine the amount of asphalt rubber binder to be mixed with the aggregate for RHMA-G as follows:

1. Base the calculations on the average of 3 briquettes produced at each asphalt rubber binder content.
2. Plot asphalt rubber binder content versus average air voids content for each set of 3 specimens and connect adjacent points with a best-fit curve.
3. Calculate voids in mineral aggregate for each specimen, average each set, and plot the average versus asphalt rubber binder content.
4. Calculate the dust proportion and plot versus asphalt rubber binder content.
5. From the curve plotted, select the theoretical asphalt rubber binder content at 4 percent air voids.
6. At the selected asphalt rubber binder content, calculate dust proportion.
7. Record the asphalt rubber binder content in the Contractor Hot Mix Asphalt Design Data Form as the OBC.

The OBC must not fall below 7.5 percent by total weight of the mix.

Laboratory mixing and compaction must comply with AASHTO R 35, except the mixing temperature of the aggregate must be between 300 and 325 degrees F. The mixing temperature of the asphalt rubber binder must be between 375 and 425 degrees F. The compaction temperature of the combined mixture must be between 290 and 320 degrees F.

39-3.02C Asphalt Rubber Binder

39-3.02C(1) General

Asphalt rubber binder must be a combination of:

1. Asphalt binder
2. Asphalt modifier
3. CRM

The combined asphalt binder and asphalt modifier must be 80.0 ± 2.0 percent by weight of the asphalt rubber binder.

39-3.02C(2) Asphalt Modifier

Asphalt modifier must be a resinous, high flash point, and aromatic hydrocarbon, and must comply with the requirements shown in the following table:

Asphalt Modifier for Asphalt Rubber Binder

Quality characteristic	Test method	Requirement
Viscosity at 100 °C ($m^2/s \times 10^{-6}$)	ASTM D445	X ± 3[a]
Flash point (min, °C)	ASTM D92	207
Molecular Analysis		
Asphaltenes (max, % by mass)	ASTM D2007	0.1
Aromatics (min, % by mass)	ASTM D2007	55

[a]The symbol "X" is the proposed asphalt modifier viscosity. "X" must be between 19 and 36. A change in "X" requires a new asphalt rubber binder design.

Asphalt modifier must be from 2.0 to 6.0 percent by weight of the asphalt binder in the asphalt rubber binder.

39-3.02C(3) Crumb Rubber Modifier

CRM must be a ground or granulated combination of scrap tire CRM and high natural CRM. CRM must be 75.0 ± 2.0 percent scrap tire CRM and 25.0 ± 2.0 percent high natural CRM by total weight of CRM. Scrap tire CRM must be from any combination of automobile tires, truck tires, or tire buffings.

The CRM must comply with the requirements shown in the following table:

Crumb Rubber Modifier for Asphalt Rubber Binder

Quality characteristic	Test method	Requirement
Scrap tire CRM gradation (% passing No. 8 sieve)	California Test 385	100
High natural CRM gradation (% passing No. 10 sieve)	California Test 385	100
Wire in CRM (max, %)	California Test 385	0.01
Fabric in CRM (max, %)	California Test 385	0.05
CRM particle length (max, in)[a]	--	3/16
CRM specific gravity	California Test 208	1.1–1.2
Natural rubber content in high natural CRM (%)	ASTM D297	40.0–48.0

[a]Test at mix design and for certificate of compliance.

CRM must be ground or granulated at ambient temperature. If steel and fiber are cryogenically separated, separation must occur before grinding or granulating. Cryogenically produced CRM particles must be ground or granulated and not pass through the grinder or granulator.

CRM must be dry, free-flowing particles that do not stick together. CRM must not cause foaming when combined with the asphalt binder and asphalt modifier. You may add calcium carbonate or talc up to 3 percent by weight of CRM.

39-3.02C(4) Design and Profile

Design the asphalt rubber binder from testing you perform for each quality characteristic and for the reaction temperatures expected during production. The profile must include the same component sources for the asphalt rubber binder used. The 24-hour (1,440-minute) interaction period determines the design profile. At a minimum, mix asphalt rubber binder components, take samples, and perform and record the tests shown in the following table:

Asphalt Rubber Binder Reaction Design Profile

Quality characteristic	Test Method	Minutes of reaction [a]							Limits
		45	60	90	120	240	360	1440	
Cone penetration at 25 °C (0.10 mm)	ASTM D217	X [b]				X		X	25–70
Resilience at 25 °C (min, % rebound)	ASTM D5329	X				X		X	18
Field softening point (°C)	ASTM D36	X				X		X	52–74
Viscosity (centipoises)	ASTM D7741	X	X	X	X	X	X	X	1,500–4,000

[a]Six hours (360 minutes) after CRM addition, reduce the oven temperature to 275 °F for 16 hours. After the 16-hour (960 minutes) cool down after CRM addition, reheat the binder to the reaction temperature expected during production for sampling and testing at 24 hours (1,440 minutes).
[b]"X" denotes required testing

39-3.02C(5) Asphalt Rubber Binder Production

39-3.02C(5)(a) General

Deliver scrap tire CRM and high natural CRM in separate bags.

39-3.02C(5)(b) Mixing

Proportion and mix asphalt binder, asphalt modifier, and CRM simultaneously or premix the asphalt binder and asphalt modifier before adding CRM. If you premix asphalt binder and asphalt modifier, mix them for at least 20 minutes. When you add CRM, the asphalt binder and asphalt modifier must be from 375 to 440 degrees F.

After interacting for at least 45 minutes, the quality characteristics of asphalt rubber binder must comply with the requirements shown in the following table:

Quality characteristic	Test method	Requirement
Cone penetration at 25 °C (0.10 mm)	ASTM D217	25–70
Resilience at 25 °C (min, % rebound)	ASTM D5329	18
Softening point (°C)	ASTM D36	52–74
Viscosity at 190 °C (centipoises)	ASTM D7741	1,500–4,000

Do not use asphalt rubber binder during the first 45 minutes of the reaction period. During this period, the asphalt rubber binder mixture must be between 375 degrees F and the lower of 425 or 25 degrees F below the asphalt binder's flash point indicated in the MSDS.

If any asphalt rubber binder is not used within 4 hours after the reaction period, discontinue heating. If the asphalt rubber binder drops below 375 degrees F, reheat before use. If you add more scrap tire CRM to the reheated asphalt rubber binder, the binder must undergo a 45-minute reaction period. The added scrap tire CRM must not exceed 10 percent of the total asphalt rubber binder weight. Reheated and reacted asphalt rubber binder must comply with the viscosity specifications. Do not reheat asphalt rubber binder more than twice.

39-3.02D Aggregates

39-3.02D(1) General

For RHMA-G, before the addition of asphalt binder and lime treatment, the aggregate must comply with the requirements shown in the following table:

Aggregate Quality

Quality characteristic	Test method	Requirement
Percent of crushed particles Coarse aggregate (min, %) One-fractured face Two-fractured faces Fine aggregate (min, %) (Passing No. 4 sieve and retained on No. 8 sieve.) One fractured face	AASHTO T 335	 -- 90 70
Los Angeles Rattler (max, %) Loss at 100 Rev. Loss at 500 Rev.	AASHTO T 96	 12 40
Sand equivalent (min)[a, b]	AASHTO T 176	47
Flat and elongated particles (max, % by weight at 5:1)	ASTM D4791	Report only
Fine aggregate angularity (min, %)[c]	AASHTO T 304 Method A	45

[a]Reported value must be the average of 3 tests from a single sample.
[b]Use of a sand reading indicator is required as shown in AASHTO T 176, Figure 1. Sections 4.7, 4.8, 7.1.2, 8.4.2 and 8.4.3 do not apply.
[c] The Engineer waives this specification if HMA contains 10 percent or less of nonmanufactured sand by weight of total aggregate, except if your JMF fails verification. Manufactured sand is fine aggregate produced by crushing rock or gravel.

39-3.02D(2) Aggregate Gradations

The aggregate gradations for RHMA-G must comply with the requirements shown in the following table:

Aggregate Gradation Requirements

Type A HMA pavement thickness	Gradation
0.10 to less than 0.20 foot	1/2 inch
0.20 foot and greater	3/4 inch

For RHMA-G, the aggregate gradations must be within the target value limits for the specified sieve size shown in the following tables:

Aggregate Gradation
(Percentage Passing)
Rubberized Hot Mix Asphalt - Gap Graded (RHMA-G)

3/4-inch RHMA-G

Sieve Sizes	Target Value Limits	Allowable Tolerance
1"	100	--
3/4"	95–98	TV ± 5
1/2"	83–87	TV ± 6
3/8"	65–70	TV ± 5
No. 4	28–42	TV ± 6
No. 8	14–22	TV ± 5
No. 200	0–6	TV ± 2

1/2-inch RHMA-G

Sieve Sizes	Target Value Limits	Allowable Tolerance
3/4"	100	--
1/2"	90–98	TV ± 6
3/8"	83–87	TV ± 5
No. 4	28–42	TV ± 6
No. 8	14–22	TV ± 5
No. 200	0–6	TV ± 2

39-3.02E Rubberized Hot Mix Asphalt Production

Asphalt rubber binder must be from 375 to 425 degrees F when mixed with aggregate.

If the dry and wet moisture susceptibility test result for treated plant-produced RHMA-G is less than the RHMA-G mix design requirement for dry and wet moisture susceptibility strength, the minimum dry and wet strength requirement is waived, but you must use one of the following treatments:

1. Aggregate lime treatment using the slurry method
2. Aggregate lime treatment using the dry lime method
3. Liquid antistrip treatment of HMA

39-3.03 CONSTRUCTION

Use a material transfer vehicle when placing RHMA-G.

Do not use a pneumatic tired roller to compact RHMA-G.

For RHMA-G placed under method compaction:

1. Only spread and compact if the atmospheric temperature is at least 55 degrees F and the surface temperature is at least 60 degrees F.
2. Complete the 1st coverage of breakdown compaction before the surface temperature drops below 285 degrees F.
3. Complete breakdown and intermediate compaction before the surface temperature drops below 250 degrees F.
4. Complete finish compaction before the surface temperature drops below 200 degrees F.
5. If the atmospheric temperature is below 70 degrees F, cover loads in trucks with tarps. The tarps must completely cover the exposed load until you transfer the mixture to the paver's hopper or to the pavement surface. Tarps are not required if the time from discharge to truck until transfer to the paver's hopper or the pavement surface is less than 30 minutes.

Spread sand at a rate between 1 and 2 lb/sq yd on new RHMA-G pavement when finish rolling is complete. Sand must be free of clay or organic matter. Sand must comply with section 90-1.02C(3). Keep traffic off the pavement until spreading sand is complete.

39-3.04 PAYMENT

Not Used

39-4 OPEN GRADED FRICTION COURSES

39-4.01 GENERAL

39-4.01A Summary

Section 39-4 includes specifications for producing and placing open graded friction courses. Open graded friction courses include HMA-O, RHMA-O, and RHMA-O-HB.

You may produce OGFC using a warm mix asphalt technology.

39-4.01B Definitions

Reserved

39-4.01C Submittals

Submit a complete JMF, except do not specify an asphalt binder content.

39-4.01D Quality Control and Assurance

39-4.01D(1) General

Reserved

39-4.01D(2) Quality Control

39-4.01D(2)(a) General

Reserved

39-4.01D(2)(b) Asphalt Rubber Binder

For RHMA-O and RHMA-O-HB, the asphalt rubber binder must comply with the specifications in 39-3.01D(2)(b).

39-4.01D(2)(c) Aggregate

Test the quality characteristics of aggregate under the test methods and frequencies shown in the following table:

Aggregate Testing Frequencies

Quality characteristic	Test method	Minimum testing frequency
Gradation	AASHTO T 27	1 per 750 tons and any remaining part
Moisture content[a]	AASHTO T 329	1 per 1500 tons and any remaining part
Crushed particles	AASHTO T 335	1 per 10,000 tons or 2 per project, whichever is greater
Los Angeles rattler	AASHTO T 96	
Flat and elongated particles	ASTM D4791	

[a]Test at continuous mixing plants only

For lime treated aggregate, test aggregate before treatment and test for gradation and moisture content during OGFC production.

39-4.01D(2)(d) Hot Mix Asphalt Production

Test the quality characteristics of OGFC under the test methods and frequencies shown in the following table:

OGFC Testing Frequencies

Quality characteristic	Test method	Minimum testing frequency
Asphalt binder content	AASHTO T 308 Method A	1 per 750 tons and any remaining part
HMA moisture content	AASHTO T 329	1 per 2,500 tons but not less than 1 per paving day

39-4.01D(3) Department Acceptance

39-4.01D(3)(a) General

The Department accepts OGFC based on compliance with:

1. Aggregate quality requirements shown in the following table:

Aggregate Quality

Quality characteristic	Test method	Requirement
Aggregate gradation	AASHTO T 27	JMF ± Tolerance
Percent of crushed particles Coarse aggregate (min, %) One-fractured face Two-fractured faces Fine aggregate (min, %) (Passing No. 4 sieve and retained on No. 8 sieve.) One fractured face	AASHTO T 335	 90 90 90
Los Angeles Rattler (max, %) Loss at 100 Rev. Loss at 500 Rev.	AASHTO T 96	 12 40
Flat and elongated particles (max, % by weight @ 5:1)	ASTM D4791	Report only

2. In-place OGFC quality requirements shown in the following table:

OGFC Acceptance In Place

Quality characteristic	Test method	Requirement
Asphalt binder content (%)	AASHTO T 308 Method A	JMF -0.4, +0.5
HMA moisture content (max, %)	AASHTO T 329	1

39-4.01D(3)(b) Asphalt Rubber Binder

The Department accepts asphalt rubber binder in RHMA-O and RHMA-O-HB under 39-3.01D(5)(b).

39-4.01D(3)(c) Pavement Smoothness

Pavement smoothness of OGFC must comply with the Mean Roughness Index requirements shown in the following table for a 0.1 mile section:

OGFC Pavement Smoothness Acceptance Criteria

OGFC placement on	Mean Roughness Index requirement
New construction or HMA overlay	60 in/mi or less
Existing pavement	75 in/mi or less
Milled surface	75 in/mi or less

39-4.01D(3)(d)–39-4.01D(3)(f) Reserved

39-4.02 MATERIALS

39-4.02A General

When mixed with asphalt binder, aggregate must not be more than 325 degrees F except aggregate for OGFC with unmodified asphalt binder must be not more than 275 degrees F.

39-4.02B Mix Design

The Department determines the asphalt binder content under California Test 368 within 20 days of your complete JMF submittal and provides you a Caltrans Hot Mix Asphalt Verification form.

For OGFC, the 1st paragraph of section 39-1.02B(1) does not apply.

39-4.02C Asphalt Binder

Asphalt rubber binder in RHMA-O and RHMA-O-HB must comply with section 39-3.02B.

39-4.02D Aggregate

39-4.02D(1) General

Aggregate must comply with the requirements shown in the following table:

Aggregate Quality

Quality characteristic	Test method	Requirement
Percent of crushed particles Coarse aggregate (min, %) One-fractured face Two-fractured faces Fine aggregate (min, %) (Passing No. 4 sieve and retained on No. 8 sieve.) One fractured face	AASHTO T 335	 -- 90 90
Los Angeles Rattler (max, %) Loss at 100 Rev. Loss at 500 Rev.	AASHTO T 96	 12 40
Flat and elongated particles (max, % by weight at 5:1)	ASTM D4791	Report only

39-4.02D(2) Aggregate Gradations

The aggregate gradations for HMA-O must comply with the requirements shown in the following table:

Aggregate Gradation Requirements

HMA-O pavement thickness	Gradation
Greater than 0.10 to less than 0.15 foot	1/2 inch
0.15 foot and greater	1 inch

The aggregate gradations for RHMA-O and RHMA-O-HB must comply with the requirements shown in the following table:

Aggregate Gradation Requirements

RHMA-O and RHMA-O-HB pavement thickness	Gradation
Greater than 0.10 foot	1/2 inch

For RHMA-O and RHMA-O-HB, the 1-inch aggregate gradation is not allowed.

For OGFC, the aggregate gradations must be within the target value limits for the specified sieve size shown in the following tables:

Aggregate Gradations
(Percentage Passing)
Open Graded Friction Course (OGFC)

1-inch OGFC

Sieve size	Target value limit	Allowable tolerance
1 1/2"	100	--
1"	99–100	TV ± 5
3/4"	85–96	TV ± 5
1/2"	55–71	TV ± 6
No. 4	10–25	TV ± 7
No. 8	6–16	TV ± 5
No. 200	0–6	TV ± 2

1/2-inch OGFC

Sieve size	Target value limit	Allowable tolerance
3/4"	100	--
1/2"	95–100	TV ± 6
3/8"	78–89	TV ± 6
No. 4	28–37	TV ± 7
No. 8	7–18	TV ± 5
No. 30	0–10	TV ± 4
No. 200	0–3	TV ± 2

If lime treatment is required, you may reduce the lime ratio for the combined aggregate from 1.0 to 0.5 percent for OGFC.

39-4.03 CONSTRUCTION

Use a material transfer vehicle when placing OGFC.

If the atmospheric temperature is below 70 degrees F, cover loads in trucks with tarps. The tarps must completely cover the exposed load until you transfer the mixture to the paver's hopper or to the pavement surface. Tarps are not required if the time from discharge to truck until transfer to the paver's hopper or the pavement surface is less than 30 minutes.

Apply a tack coat before placing OGFC. The tack coat application rate must comply with the requirements of the following table:

Tack Coat Application Rates for OGFC

OGFC over:	Minimum Residual Rates (gal/sq yd)		
	CSS1/CSS1h, SS1/SS1h and QS1h/CQS1h Asphaltic Emulsion	CRS1/CRS2, RS1/RS2 and QS1/CQS1 Asphaltic Emulsion	Asphalt Binder and PMRS2/PMCRS2 and PMRS2h/PMCRS2h Asphaltic Emulsion
New HMA	0.03	0.04	0.03
PCC and existing AC surfacing	0.05	0.06	0.04
Planed pavement	0.06	0.07	0.05

Compact OGFC with steel-tired, 2-axle tandem rollers. If placing over 300 tons of OGFC per hour, use at least 3 rollers for each paver. If placing less than 300 tons of OGFC per hour, use at least 2 rollers for each paver. Each roller must weigh between 126 to 172 lb per linear inch of drum width. Turn the vibrator off.

Compact OGFC with 2 coverages. The Engineer may order fewer coverages if the layer thickness of OGFC is less than 0.20 foot.

For HMA-O with unmodified asphalt binder:

1. Spread and compact only if the atmospheric temperature is at least 55 degrees F and the surface temperature is at least 60 degrees F.
2. Complete the 1st coverage using 2 rollers before the surface temperature drops below 240 degrees F.
3. Complete all compaction before the surface temperature drops below 200 degrees F.

For HMA-O with modified asphalt binder except asphalt rubber binder:

1. Spread and compact only if the atmospheric temperature is at least 50 degrees F and the surface temperature is at least 50 degrees F.
2. Complete the 1st coverage using 2 rollers before the surface temperature drops below 240 degrees F.
3. Complete all compaction before the surface temperature drops below 180 degrees F.

For RHMA-O and RHMA-O-HB:

1. Spread and compact only if the atmospheric temperature is at least 55 degrees F and surface temperature is at least 60 degrees F.
2 Complete the 1st coverage using 2 rollers before the surface temperature drops below 280 degrees F.
3. Complete compaction before the surface temperature drops below 250 degrees F.

Spread sand at a rate between 1 and 2 lb/sq yd on new RHMA-O and RHMA-O-HB pavement when finish rolling is complete. Sand must be free of clay or organic matter. Sand must comply with section 90-1.02C(3). Keep traffic off the pavement until spreading sand is complete.

If you choose to correct OGFC for smoothness, the Engineer determines if the corrective method causes raveling. OGFC that is raveling must be removed and replaced.

39-4.04 PAYMENT

Not Used

39-5 BONDED WEARING COURSES

39-5.01 GENERAL

39-5.01A General

39-5.01A(1) Summary

Section 39-5 includes specifications for producing and placing bonded wearing courses.

BWC includes placing a polymer modified asphaltic emulsion and the specified HMA in a single pass with an integrated paving machine.

BWC using RHMA-G, RHMA-O, or HMA-O must comply with the specifications for RHMA-G, RHMA-O, or HMA-O.

39-5.01A(2) Definitions

Reserved

39-5.01A(3) Submittals

With your JMF submittal, include:

1. Asphaltic emulsion membrane target residual rate
2. Weight ratio of water to bituminous material in the original asphaltic emulsion

Within 3 business days following the 1st job site delivery, submit test results for asphaltic emulsion properties performed on a sample taken from the asphaltic emulsion delivered.

Within 1 business day of each job site delivery of asphaltic emulsion, submit to METS a 2-quart sample and a certificate of compliance. Ship each sample so that it is received at METS within 48 hours of sampling.

Each day BWC is placed, submit the residual and application rate for the asphaltic emulsion membrane.

During production, submit certified volume or weight slips for the materials supplied.

39-5.01A(4) Quality Control and Assurance

39-5.01A(4)(a) General

For each job site delivery of asphaltic emulsion, take a 2-quart sample in the presence of the Engineer. Take samples from the delivery truck at mid-load from a sampling tap or thief. If the sample is taken from the tap, draw and discard 4 quarts before sampling.

If you unload asphalt binder or asphaltic emulsion into a bulk storage tank, do not use material from the tank until you submit test results for a sample taken from the bulk storage tank. Testing must be performed by an AASHTO-accredited laboratory.

39-5.01A(4)(b) Quality Control

Sample BWC in two 1-gallon metal containers.

The asphaltic emulsion membrane must be tested under ASTM D2995 at least once per paving day at the job site.

39-5.01A(4)(c) Department Acceptance

The Department accepts asphaltic emulsion membrane based on compliance with the requirements shown in the following tables:

Asphaltic Emulsion Membrane

Quality characteristic	Test method	Requirement
Saybolt Furol Viscosity at 25 °C (SFS) [a]	AASHTO T 59	20–100
Sieve test on original emulsion at time of delivery (max, %)	AASHTO T 59	0.05
24-hour storage stability (max, %)	AASHTO T 59	1
Residue by evaporation (min, %)	California Test 331	63
Tests on residue from evaporation test:		
Torsional recovery, measure entire arc of recovery at 25 °C (min, %)	California Test 332	40
Penetration at 25 °C (0.01 mm) PG76-22 M PG64-28 M	AASHTO T 49	 50–70 150–200

[a] SFS means Saybolt Furol seconds

The Department accepts the BWC based on the submitted asphaltic emulsion membrane target residual rate ±0.02 gal/sq yd when tested under ASTM D2995.

39-5.01B Materials

39-5.01B(1) General

Reserved

39-5.01B(2) Asphaltic Emulsion Membrane

The asphaltic emulsion membrane must comply with the requirements shown in the following table:

Asphaltic Emulsion Membrane

Quality characteristic	Test method	Requirement
Saybolt Furol Viscosity at 25 °C (SFS) [a]	AASHTO T 59	20–100
Sieve test on original emulsion at time of delivery (max, %)	AASHTO T 59	0.05
24-hour storage stability (max, %)	AASHTO T 59	1
Residue by evaporation (min, %)	California Test 331	63
Tests on residue from evaporation test:		
Torsional recovery, measure entire arc of recovery at 25 °C (min, %)	California Test 332	40
Penetration at 25 °C (0.01 mm) PG76-22 M PG64-28 M	AASHTO T 49	 50–70 150–200

[a] SFS means Saybolt Furol seconds

39-5.01B(3) Reserved

39-5.01C Construction

39-5.01C(1) General

Use method compaction for BWC.

Do not dilute the asphaltic emulsion.

Do not place BWC if rain is forecast for the project area within 24 hours by the National Weather Service.

39-5.01C(2) Spreading and Compacting Equipment

Use a material transfer vehicle when placing BWC.

Use an integrated distributor paver capable of spraying the asphaltic emulsion membrane, spreading the HMA, and leveling the mat surface in 1 pass.

Apply asphaltic emulsion membrane at a uniform rate for the full paving width. The asphaltic emulsion membrane must not be touched by any part of the paver including wheels or tracks.

If the spray bar is adjusted for changing pavement widths, the paver must prevent excess spraying of asphaltic emulsion beyond 2 inches of the HMA edge.

39-5.01C(3) Applying Asphaltic Emulsion

Before spreading HMA, apply asphaltic emulsion membrane on dry or damp pavement with no free water. Apply asphaltic emulsion when the atmospheric and pavement temperatures are above:

1. 50 degrees F if PG 76-22 M is specified
2. 45 degrees F if PG 64-28 M is specified

Apply emulsion at a temperature from 120 to 180 degrees F and in a single application at the residual rate specified for the condition of the underlying surface. Asphaltic emulsion membrane must have a target residual rate for the surfaces to receive the emulsion as shown in the following table:

Asphaltic Emulsion Membrane Target Residual Rate

Surface to receive asphaltic emulsion membrane	Target residual rates (gal/sq yd)
PCC pavement	0.09–0.11
Dense, compacted, new HMA pavement	0.11–0.14
Open textured, dry, aged or oxidized existing AC pavement	0.13–0.17

If requested and authorized, you may change the asphaltic emulsion membrane application rates.

39-5.01C(4) Placing and Compacting Hot Mix Asphalt

Construct a transverse joint if the HMA remains in the paver for more than 30 minutes.

Do not reintroduce HMA spread over asphaltic emulsion membrane into the paving process.

Do not overlap or hot lap HMA. Pave through lanes after paving adjacent:

1. Shoulders
2. Tapers
3. Transitions
4. Road connections
5. Driveways
6. Curve widenings
7. Chain control lanes
8. Turnouts
9. Turn pockets
10. Ramps

For BWC placed on areas adjacent to through lanes that extend into the through lanes, cut the BWC to a neat, straight vertical line at the lane line.

If you spill asphaltic emulsion into the paver hopper, stop paving and remove the contaminated material.

39-5.01D Payment

Not Used

39-5.02 BONDED WEARING COURSES-GAP GRADED

39-5.02A General

39-5.02A(1) Summary

Section 39-5.02 includes specifications for producing bonded wearing course-gap graded.

39-5.02A(2) Definitions

Reserved

39-5.02A(3) Submittals

Include film thickness and calculations and AASHTO T 305 results with your JMF submittal.

39-5.02A(4) Quality Control and Assurance

39-5.02A(4)(a) General

Reserved

39-5.02A(4)(b) Quality Control

39-5.02A(4)(b)(i) General

Reserved

39-5.02A(4)(b)(ii) Aggregate

Test the quality characteristics of aggregate under the test methods and frequencies shown in the following table:

Aggregate Testing Frequencies

Quality characteristic	Test method	Minimum testing frequency
Gradation	AASHTO T 27	1 per 750 tons and any remaining part
Sand equivalent[a, b]	AASHTO T 176	
Moisture content[c]	AASHTO T 329	1 per 1500 tons and any remaining part
Crushed particles	AASHTO T 335	1 per 10,000 tons or 2 per project, whichever is greater
Los Angeles rattler	AASHTO T 96	
Flat and elongated particles	ASTM D4791	
Fine aggregate angularity	AASHTO T 304 Method A	

[a]Reported value must be the average of 3 tests from a single sample.
[b]Use of a sand reading indicator is required as shown in AASHTO T 176, Figure 1. Sections 4.7, 4.8, 7.1.2, 8.4.2, and 8.4.3 do not apply.
[c]Test at continuous mixing plants only.

For lime treated aggregate, test aggregate before treatment and test for gradation and moisture content during BWC-G production.

39-5.02A(4)(b)(iii) Hot Mix Asphalt Production

Sample BWC in two 1-gallon metal containers.

Test the quality characteristics of BWC-G under the test methods and frequencies shown in the following table:

BWC-G Testing Frequencies

Quality characteristic	Test method	Minimum testing frequency
Asphalt binder content	AASHTO T 308 Method A	1 per 750 tons and any remaining part
HMA moisture content	AASHTO T 329	1 per 2,500 tons but not less than 1 per paving day

39-5.02A(4)(b)(iv)–39-5.02A(4)(b)(vii) Reserved

39-5.02A(4)(c) Department Acceptance

The Department accepts BWC-G based on compliance with:

1. Asphalt binder content at JMF -0.4, +0.5 percent when tested under AASHTO T 308, Method A.
2. Aggregate quality requirements shown in the following table:

Aggregate Quality

Quality characteristic	Test method	Requirement
Aggregate gradation	AASHTO T 27	JMF ± Tolerance
Percent of crushed particles Coarse aggregate (min, %) One-fractured face Two-fractured faces Fine aggregate (min, %) (Passing No. 4 sieve and retained on No. 8 sieve.) One fractured face	AASHTO T 335	 -- 90 85
Los Angeles Rattler (max, %) Loss at 100 Rev. Loss at 500 Rev.	AASHTO T 96	 12 35
Sand equivalent (min)	AASHTO T 176	47
Flat and elongated particles (max, % by weight at 5:1)	ASTM D4791	25
Fine aggregate angularity (min, %)	AASHTO T 304 Method A	45

[a]Reported value must be the average of 3 tests from a single sample.
[b]Use of a sand reading indicator is required as shown in AASHTO T 176, Figure 1. Sections 4.7, 4.8, 7.1.2, 8.4.2 and 8.4.3 do not apply.

The Department accepts asphaltic emulsion membrane based on compliance with the requirements shown in the following tables:

Asphaltic Emulsion Membrane

Quality characteristic	Test method	Requirement
Saybolt Furol Viscosity at 25 °C (SFS) [a]	AASHTO T 59	20–100
Sieve test on original emulsion at time of delivery (max, %)	AASHTO T 59	0.05
24-hour storage stability (max, %)	AASHTO T 59	1
Residue by evaporation (min, %)	California Test 331	63
Tests on residue from evaporation test:		
Torsional recovery, measure entire arc of recovery at 25 °C (min, %)	California Test 332	40
Penetration at 25 °C (0.01 mm) PG76-22 M PG64-28 M	AASHTO T 49	 50–70 150–200

[a] SFS means Saybolt Furol seconds

39-5.02B Materials

39-5.02B(1) General

Reserved

39-5.02B(2) Mix Design

For BWC-G, the 1st paragraph of section 39-1.02B(1) does not apply.

Determine the proposed OBC from a mix design that complies with the requirements shown in the following table:

Hot Mix Asphalt Mix Design Requirements

Quality characteristic	Test method	Requirement
Film thickness (min, μm)	Asphalt Institute MS-2 Table 6.1 [a]	12
Drain down (max, %)	AASHTO T 305 [b]	0.1

[a] Film thickness is calculated based on the effective asphalt content and determined as follows:

$$FT = \left(\frac{P_{be}}{SA \times G_b \times 1000} \right) 10^6$$

Where:

FT = Film thickness in μm
P_{be} = Effective asphalt content by total weight of mix using SP-2 Asphalt Mixture
SA = Estimated surface area of the aggregate blend in m^2/kg from Table 6.1 in the Asphalt Institute Manual Series No. 2 (MS-2).
G_b = Specific gravity of asphalt binder

[b] Combine aggregate and asphalt at the asphalt binder supplier's instructed mixing temperature. Coated aggregates that fall through the wire basket during loading must be returned to the basket before conditioning at 350 °F for 1 hour.

The OBC must be greater than 4.9 percent by total weight of mix.

39-5.02B(3) Asphalt Binder

Reserved

39-5.02B(4) Aggregate

The aggregate must comply with the requirements shown in the following table:

Aggregate Quality

Quality characteristic	Test method	Requirement
Percent of crushed particles Coarse aggregate (min, %) One-fractured face Two-fractured faces Fine aggregate (min, %) (Passing No. 4 sieve and retained on No. 8 sieve.) One fractured face	AASHTO T 335	 -- 90 85
Los Angeles Rattler (max, %) Loss at 100 Rev. Loss at 500 Rev.	AASHTO T 96	 12 35
Sand equivalent (min)	AASHTO T 176	47
Flat and elongated particles (max, % by weight @ 5:1)	ASTM D4791	25
Fine aggregate angularity (min, %)	AASHTO T 304 Method A	45

[a]Reported value must be the average of 3 tests from a single sample.
[b]Use of a sand reading indicator is required as shown in AASHTO T 176, Figure 1. Sections 4.7, 4.8, 7.1.2, 8.4.2 and 8.4.3 do not apply.

The aggregate gradations for BWC-G must comply with the requirements shown in the following table:

Aggregate Gradation Requirements

BWC-G pavement thickness	Gradation
less than 0.08 foot	No. 4 or 3/8 inch
0.08 foot and greater	1/2 inch

The proposed aggregate gradation must be within the TV limits for the specified sieve sizes shown in the following tables:

Aggregate Gradation
(Percentage Passing)
Bonded Wearing Course—Gap Graded

1/2-inch BWC-G

Sieve sizes	Target value limits	Allowable tolerance
3/4"	100	--
1/2"	80–100	TV ± 6
3/8"	55–80	TV ± 6
No. 4	25–40	TV ± 7
No. 8	19–32	TV ± 5
No. 16	16–22	TV ± 5
No. 30	10–18	TV ± 4
No. 50	8–13	TV ± 4
No. 100	6–10	TV ± 2
No. 200	4.0–7.0	TV ± 2

3/8-inch BWC-G

Sieve sizes	Target value limits	Allowable tolerance
1/2"	100	--
3/8"	80–100	TV ± 6
No. 4	25–40	TV ± 7
No. 8	19–32	TV ± 5
No. 16	16–22	TV ± 5
No. 30	10–18	TV ± 4
No. 50	8–13	TV ± 4
No. 100	7–11	TV ± 2
No. 200	6.0–10.0	TV ± 2

No. 4 BWC-G

Sieve sizes	Target value limits	Allowable tolerance
1/2"	100	--
3/8"	95–100	TV ± 2
No. 4	42–55	TV ± 7
No. 8	19–32	TV ± 5
No. 16	16–22	TV ± 5
No. 30	10–18	TV ± 4
No. 50	8–13	TV ± 4
No. 100	7–11	TV ± 2
No. 200	6.0–10.0	TV ± 2

39-5.02C Construction

Not Used

39-5.02D Payment

Not Used

39-6 HOT MIX ASPHALT ON BRIDGE DECKS

39-6.01 GENERAL

Section 39-6 includes specifications for producing and placing hot mix asphalt on bridge decks.

HMA used for bridge decks must comply with the specifications for Type A HMA in section 39-2.

39-6.02 MATERIALS

Do not use the 1-inch or 3/4-inch aggregate gradation for HMA on bridge decks.

The grade of asphalt binder for HMA must be PG 64-10 or PG 64-16.

39-6.03 CONSTRUCTION

Spread and compact HMA on bridge decks using method compaction.

If a concrete expansion dam is to be placed at a bridge deck expansion joint, tape oil-resistant construction paper to the deck over the area to be covered by the dam before placing the tack coat and HMA across the joint.

Apply tack coat at the minimum residual rate specified in section 39-1.03C(5). For HMA placed on a deck seal, use the minimum residual rate specified for PCC.

For HMA placed on a deck seal:

1. Place the HMA within 7 days after installing the deck seal.
2. If a paper mask is placed on the deck under section 54-5.03, place the HMA continuously across the paper mask.
3. Place HMA in at least 2 approximately equal layers.
4. For placement of the 1st HMA layer:
   - 4.1. Comply with the HMA application temperature recommended by the deck seal manufacturer.
   - 4.2. Deliver and place HMA using equipment with pneumatic tires or rubber-faced wheels. Do not operate other vehicles or equipment on the bare deck seal.
   - 4.3. Deposit HMA on the deck seal in such a way that the deck seal is not damaged. Do not use a windrow.
   - 4.4. Place HMA in a downhill direction on bridge decks with grades over 2 percent.
   - 4.5. Self-propelled spreading equipment is not required.

39-6.04 PAYMENT

Not Used

39-7 MINOR HOT MIX ASPHALT

39-7.01 GENERAL

39-7.01A Summary

Section 39-7 includes specifications for producing and placing minor hot mix asphalt.

Minor HMA must comply with section 39-2 except as specified in this section 39-7.

39-7.01B Definitions

Reserved

39-7.01C Submittals

The QC plan, test results, and inertial profiler specifications in sections 39-1.01C(3), 39-1.01C(4), 39-1.01C(13)(c)–(d) do not apply.

39-7.01D Quality Control and Assurance

39-7.01D(1) General

For minor HMA, the JMF renewal, inertial profiler certifications and testing, and prepaving meeting specifications in sections 39-1.01D(4), 39-1.01D(6)(c), and 39-1.01D(7) do not apply.

Test pavement smoothness with a 12 foot straightedge.

39-7.01D(2) Quality Control

For minor HMA, section 39-2.01D(2) applies except testing for compliance with the following quality characteristics is not required:

1. Flat and elongated particles
2. Fine aggregate angularity
3. Hamburg wheel track
4. Moisture susceptibility

39-7.01D(3) Department Acceptance

The Department accepts minor HMA under section 39-2.01D(5) except compliance with the following quality characteristics is not required:

1. Flat and elongated particles
2. Fine aggregate angularity
3. Hamburg wheel track
4. Moisture susceptibility

39-7.02 MATERIALS

39-7.02A General

Reserved

39-7.02B Mix Design

The mix design for minor HMA must comply with section 39-2.02B except the Hamburg wheel track and moisture susceptibility requirements do not apply.

39-7.02C Asphalt Binder

The grade of asphalt binder for minor HMA must be PG-64-10 or PG-64-16.

39-7.02D Liquid Antistrip Treatment

Treat minor HMA with liquid antistrip.

39-7.03 CONSTRUCTION

Not Used

39-7.04 PAYMENT

Not Used

39-8–39-10 RESERVED

^^

40 CONCRETE PAVEMENT

07-19-13

Replace the headings and paragraphs in section 40 with:

07-19-13

40-1 GENERAL

40-1.01 GENERAL

40-1.01A Summary

Section 40-1 includes general specifications for constructing concrete pavement.

40-1.01B Definitions

concrete raveling: Progressive disintegration of the pavement surface resulting from dislodged aggregate.

full depth crack: Crack that runs from one edge of the slab to the opposite or adjacent side of the slab, except a crack parallel to and within 0.5 foot of either side of a planned contraction joint

working crack: Crack that extends through the full depth of the slab and is parallel to and within 0.5 foot of either side of a planned contraction joint.

action limit: Value at which corrective actions must be made while production may continue.

suspension limit: Value at which production must be suspended while corrections are made.

40-1.01C Submittals

40-1.01C(1) General

At least 15 days before delivery to the job site, submit manufacturer's recommendations and instructions for storage and installation of:

1. Threaded tie bar splice couplers
2. Joint filler

As an informational submittal, submit calibration documentation and operational guidelines for frequency measuring devices (tachometer) for concrete consolidation vibrators.

Submit updated quality control charts each paving day.

40-1.01C(2) Certificates of Compliance

Submit a certificate of compliance for:

1. Tie bars
2. Threaded tie bar splice couplers
3. Dowel bars
4. Tie bar baskets
5. Dowel bar baskets
6. Joint filler
7. Epoxy powder coating

40-1.01C(3) Quality Control Plan

Submit a concrete pavement QC plan. Allow 30 days for review.

40-1.01C(4) Mix Design

At least 15 days before testing for mix proportions, submit a copy of the AASHTO accreditation for your laboratory determining the mix proportions. At least 15 days before starting field qualification, submit the proposed concrete mix proportions, the corresponding mix identifications, and laboratory test reports including the modulus of rupture for each trial mixture at 10, 21, 28, and 42 days.

40-1.01C(5) Concrete Field Qualification

Submit field qualification data and test reports including:

1. Mixing date
2. Mixing equipment and procedures used
3. Batch volume in cubic yards. The minimum batch size is 5 cu yd.
4. Type and source of ingredients used
5. Penetration of the concrete
6. Air content of the plastic concrete
7. Age and strength at time of concrete beam testing

Field qualification test reports must be certified with a signature by an official in responsible charge of the laboratory performing the tests.

40-1.01C(6) Cores

Submit for authorization the name of the laboratory you propose to use for testing the cores for air content.

Submit each core in an individual plastic bag marked with a location description.

40-1.01C(7) Profile Data and Straightedge Measurements

At least 5 business days before start of initial profiling or changing profiler or operator, submit:

1. Inertial profiler (IP) certification issued by the Department. The certification must not be more than 12 months old.
2. Operator certification for the IP issued by the Department. The operator must be certified for each different model of IP device operated. The certification must not be more than 12 months old.
3. List of manufacturer's recommended test procedures for IP calibration and verification.

Within 2 business days after cross correlation testing, submit ProVAL profiler certification analysis report for cross correlation test results performed on test section. ProVAL is FHWA's software. Submit the certification analysis report to the Engineer and to the electronic mailbox address:

smoothness@dot.ca.gov

Within 2 business days after each day of inertial profiling, submit profile data to the Engineer and to the electronic mailbox address:

smoothness@dot.ca.gov

Within 2 business days of performing straightedge testing, submit a report of areas requiring smoothness correction.

40-1.01C(8)–40-1.01C(12) Reserved

40-1.01D Quality Control and Assurance

40-1.01D(1) General

If the pavement quantity is at least 2000 cu yd, provide a QC manager.

Core pavement as described for, thickness, bar placement, and air content.

For the Department's modulus of rupture testing, assist the Engineer in fabricating test beams by providing materials and labor.

Allow at least 25 days for the Department to schedule testing for coefficient of friction. Notify the Engineer when the pavement is scheduled to be opened to traffic. Notify the Engineer when the pavement is ready for testing which is the latter of:

1. Seven days after paving
2. When the pavement has attained a modulus of rupture of at least 550 psi

The Department tests for coefficient of friction within 7 days of receiving notification that the pavement is ready for testing.

40-1.01D(2) Prepaving Conference

Schedule a prepaving conference at a mutually agreed upon time and place to meet with the Engineer. Make the arrangements for the conference facility. Discuss QC plan and methods of performing each item of the work.

Prepaving conference attendees must sign an attendance sheet provided by the Engineer. The prepaving conference must be attended by your:

1. Project superintendent
2. QC manager
3. Paving construction foreman
4. Workers and your subcontractor's workers, including:
   - 4.1. Foremen including subcontractor's Foremen
   - 4.2. Concrete plant manager
   - 4.3. Concrete plant operator

Do not start paving activities including test strips until the listed personnel have attended a prepaving conference.

40-1.01D(3) Just-In-Time-Training

Reserved

40-1.01D(4) Quality Control Plan

Establish, implement, and maintain a QC plan for pavement. The QC plan must describe the organization and procedures used to:

1. Control the production process
2. Determine if a change to the production process is needed
3. Implement a change

The QC plan must include action and suspension limits and details of corrective action to be taken if any process is out of those limits. Suspension limits must not exceed specified acceptance criteria.

The QC plan must address the elements affecting concrete pavement quality including:

1. Mix proportions
2. Aggregate gradation
3. Materials quality
4. Stockpile management
5. Line and grade control
6. Proportioning
7. Mixing and transportation
8. Placing and consolidation
9. Contraction and construction joints
10. Bar reinforcement placement and alignment
11. Dowel bar placement, alignment, and anchorage
12. Tie bar placement
13. Modulus of rupture
14. Finishing and curing
15. Protecting pavement
16. Surface smoothness

40-1.01D(5) Mix Design

Use a laboratory that complies with ASTM C 1077 to determine the mix proportions for concrete pavement. The laboratory must have a current AASHTO accreditation for:

1. AASHTO T 97 or ASTM C 78
2. ASTM C 192/C 192M

Make trial mixtures no more than 24 months before field qualification.

Using your trial mixtures, determine the minimum cementitious materials content. Use your value for minimum cementitious material content for *MC* in equation 1 and equation 2 of section 90-1.02B(3).

To determine the minimum cementitious materials content or maximum water to cementitious materials ratio, use modulus of rupture values of at least 570 psi for 28 days age and at least 650 psi for 42 days age.

If changing an aggregate supply source or the mix proportions, produce a trial batch and field-qualify the new concrete. The Engineer does not adjust contract time for performing sampling, testing, and qualifying new mix proportions or changing an aggregate supply source.

40-1.01D(6) Quality Control Testing

40-1.01D(6)(a) General

Testing laboratories and testing equipment must comply with the Department's Independent Assurance Program.

40-1.01D(6)(b) Concrete Mix

Before placing pavement, your mix design must be field qualified. Use an ACI certified "Concrete Laboratory Technician, Grade I" to perform field qualification tests and calculations. Test for modulus of rupture under California Test 523 at 10, 21, and 28 days of age.

When placing pavement, your quality control must include testing properties at the frequencies shown in the following table:

QC Testing Frequency

Property	Test method	Minimum frequency
Cleanness value	California Test 227	2 per day
Sand equivalent	California Test 217	2 per day
Aggregate gradation	California Test 202	2 per day
Air content (air entrainment specified)	California Test 504	1 per hour
Air content (air entrainment not specified)	California Test 504	1 per 4 hours
Density	California Test 518	1 per 4 hours
Penetration	California Test 533	1 per 4 hours
Aggregate moisture meter calibration[a]	California Test 223 or California Test 226	1 per day

[a] Check calibration of the plant moisture meter by comparing moisture meter readings with California Test 223 or California Test 226 test results.

Maintain control charts to identify potential problems and assignable causes. Post a copy of each control chart at a location determined by the Engineer.

Individual measurement control charts must use the target values in the mix proportions as indicators of central tendency.

Develop linear control charts for:

1. Cleanness value
2. Sand equivalent
3. Fine and coarse aggregate gradation
4. Air content
5. Penetration

Control charts must include:

1. Contract number
2. Mix proportions
3. Test number
4. Each test parameter
5. Action and suspension limits
6. Specification limits
7. Quality control test results

For fine and coarse aggregate gradation control charts, record the running average of the previous 4 consecutive gradation tests for each sieve and superimpose the specification limits.

For air content control charts, the action limit is ±1.0 percent of the specified value. If no value is specified, the action limit is ±1.0 percent of the value used for your approved mix design.

As a minimum, a process is out of control if any of the following occurs:

1. For fine and coarse aggregate gradation, 2 consecutive running averages of 4 tests are outside the specification limits
2. For individual penetration or air content measurements:
   2.1. One point falls outside the suspension limit line
   2.2. Two points in a row fall outside the action limit line

Stop production and take corrective action for out of control processes or the Engineer rejects subsequent material.

Before each day's concrete pavement placement and at intervals not to exceed 4 hours of production, use a tachometer to test and record vibration frequency for concrete consolidation vibrators.

40-1.01D(6)(c) Pavement Smoothness

40-1.01D(6)(c)(i) General

Notify the Engineer 2 business days before performing smoothness testing including IP calibration and verification testing. The notification must include start time and locations by station.

Before testing the pavement smoothness, remove foreign objects from the surface, and mark the beginning and ending station on the pavement shoulder.

Test pavement smoothness using an IP except use a 12-foot straightedge at the following locations:

1. Traffic lanes less than 1,000 feet in length including ramps, turn lanes, and acceleration and deceleration lanes
2. Areas within 15 feet of manholes
3. Shoulders
4. Weigh-in-motion areas
5. Miscellaneous areas such as medians, gore areas, turnouts, and maintenance pullouts

40-1.01D(6)(c)(ii) Straightedge Testing

Identify locations of areas requiring correction by:

1. Location Number
2. District-County-Route
3. Beginning station or post mile to the nearest 0.01 mile
4. For correction areas within a lane:
   - 4.1. Lane direction as NB, SB, EB, or WB
   - 4.2. Lane number from left to right in direction of travel
   - 4.3. Wheel path as "L" for left, "R" for right, or "B" for both
5. For correction areas not within a lane:
   - 5.1. Identify pavement area (e.g., shoulder, weight station, turnout)
   - 5.2. Direction and distance from centerline as "L" for left or "R" for right
6. Estimated size of correction area

40-1.01D(6)(c)(iii) Inertial Profile Testing

IP equipment must display a current certification decal with expiration date.

Conduct cross correlation IP verification test in the Engineer's presence before performing initial profiling. Verify cross correlation IP verification test at least annually. Conduct 5 repeat runs of the IP on an authorized test section. The test section must be on an existing concrete pavement surface 0.1 mile long. Calculate a cross correlation to determine the repeatability of your device under Section 8.3.1.2 of AASHTO R 56 using ProVAL profiler certification analysis with a 3 feet maximum offset. The cross correlation must be a minimum of 0.92.

Conduct the following IP calibration and verification tests in the Engineer's presence each day before performing inertial profiling:

1. Block test. Verify the height sensor accuracy under AASHTO R 57, section 5.3.2.3.
2. Bounce test. Verify the combined height sensor and accelerometer accuracy under AASHTO R 57, section 5.3.2.3.2.
3. DMI test. Calibrate the accuracy of the testing procedure under AASHTO R 56, section 8.4.
4. Manufacturer's recommended tests.

Collect IP data using the specified ProVAL analysis with 250 mm and IRI filters. Comply with the requirements for data collection under AASHTO R 56.

For IP testing, wheel paths are 3 feet from and parallel to the edge of a lane. Left and right are relative to the direction of travel. The IRI is the pavement smoothness along a wheel path of a given lane. The MRI is the average of the IRI values for the left and right wheel path from the same lane.

Operate the IP according to the manufacturer's recommendations and AASHTO R 57 at 1-inch recording intervals and a minimum 4 inch line laser sensor.

Collect IP data under AASHTO R 56.IP data must include:

1. Raw profile data for each lane.
2. ProVAL ride quality analysis report for the international roughness index (IRI) of left and right wheel paths of each lane. Submit in pdf file format.
3. ProVAL ride quality analysis report for the mean roughness index (MRI) of each lane. Submit in pdf file format.
4. ProVAL smoothness assurance analysis report for IRIs of left wheel path. Submit in pdf file format.
5. ProVAL smoothness assurance analysis report for IRIs of right wheel path. Submit in pdf file format.
6. GPS data file for each lane in GPS exchange. Submit in GPS eXchange file format.
7. Manufacturer's recommended IP calibration and verification tests results.
8. AASHTO IP calibration and verification test results including bounce, block, and distance measurement instrument (DMI).

Submit the IP raw profile data in unfiltered electronic pavement profile file (PPF) format. Name the PPF file using the following naming convention:

YYYYMMDD_TTCCCRRR_D_L_W_S_X_PT.PPF

where:
YYYY = year
MM = Month, leading zero
DD = Day of month, leading zero
TT = District, leading zero
CCC = County, 2 or 3 letter abbreviation as shown in section 1-1.08
RRR = Route number, no leading zeros
D = Traffic direction as NB, SB, WB, or EB
L = Lane number from left to right in direction of travel
W = Wheel path as "L" for left, "R" for right, or "B" for both
S = Beginning station to the nearest foot (e.g., 10+20) or beginning post mile to the nearest hundredth (e.g., 25.06) no leading zero
X = Profile operation as "EXIST" for existing pavement, "PAVE" for after paving, or "CORR" for after final surface pavement correction
PT = Pavement type (e.g., "concrete", etc.)

Determine IRIs using the ProVAL ride quality analysis with a 250 mm and IRI filters. While collecting the profile data to determine IRI, record the following locations in the raw profile data:

1. Begin and end of all bridge approach slabs
2. Begin and end of all bridges
3. Begin and end of all culverts visible on the roadway surface

For each 0.1 mile section, your IRI values must be within 10 percent of the Department's IRI values. The Engineer may order you to recalibrate your IP equipment and reprofile. If your results are inaccurate due to operator error, the Engineer may disqualify your IP operator.

Determine the MRI for 0.1-mile fixed sections. A partial section less than 0.1 mile that is the result of an interruption to continuous pavement surface must comply with the MRI specifications for a full section. Adjust the MRI for a partial section to reflect a full section based on the proportion of a section paved.

Determine the areas of localized roughness. Use the ProVAL smoothness assurance with a continuous IRI for each wheel path, 25-foot interval, and 250 mm and IRI filters.

40-1.01D(6)(c)(iv) Reserved

40-1.01D(6)(d)–40-1.01D(6)(h) Reserved

40-1.01D(7) Pavement Acceptance

40-1.01D(7)(a) Acceptance Testing

40-1.01D(7)(a)(i) General

The Department's acceptance testing includes testing the pavement properties at the minimum frequencies shown in the following table:

Acceptance Testing

Property	Test Method		Frequency[a]
	CRCP	JPCP	
Modulus of rupture (28 day)	California Test 523		1,000 cu yd
Air content[b]	California Test 504		1 day's paving
Dowel bar placement	--	Measurement[a]	700 sq yd
Tie bar placement	--	Measurement[a]	4,000 sq yd
Thickness	California Test 531		1,200 sq yd
Coefficient of friction	California Test 342		1 day's paving

[a]A single test represents no more than the frequency specified.
[b]Tested only when air entrainment is specified.

Pavement smoothness may be accepted based on your testing in the absence of the Department's testing.

40-1.01D(7)(a)(ii) Air Content

If air-entraining admixtures are specified, the Engineer uses a t-test to compare your QC test results with the Department's test results. The t-value for test data is determined using the following equation:

$$t = \frac{\left|\overline{X}_c - \overline{X}_v\right|}{S_p\sqrt{\frac{1}{n_c} + \frac{1}{n_v}}} \quad \text{and} \quad S_p^2 = \frac{S_c^2(n_c - 1) + S_v^2(n_v - 1)}{n_c + n_v - 2}$$

where:

n_c = Number of your quality control tests (minimum of 6 required)
n_v = Number of Department's tests (minimum of 2 required)
$\overline{X}_c$ = Mean of your quality control tests
$\overline{X}_v$ = Mean of the Department's tests
S_p = Pooled standard deviation
(When $n_v = 1$, $S_p = S_c$)
S_c = Standard deviation of your quality control tests
S_v = Standard deviation of the Department's tests (when $n_v > 1$)

The Engineer compares your QC test results with the Department's test results at a level of significance of $\alpha = 0.01$. The Engineer compares the t-value to tcrit, using degrees of freedom showing in the following table:

degrees of freedom (nc+nv-2)	tcrit (for α = 0.01)
1	63.657
2	9.925
3	5.841
4	4.604
5	4.032
6	3.707
7	3.499
8	3.355
9	3.250
10	3.169

If the t-value calculated is less than or equal to tcrit, your quality control test results are verified. If the t-value calculated is greater than tcrit, quality control test results are not verified.

If your quality control test results are not verified, core at least 3 specimens from concrete pavement under section 40-1.03P. The Engineer selects the core locations. The authorized laboratory must test these specimens for air content under ASTM C 457. The Engineer compares these test results with your quality control test results using the t-test method. If your quality control test results are verified based on this comparison, the Engineer uses the quality control test results for acceptance of concrete pavement for air content. If your quality control test results are not verified based on this comparison, the Engineer uses the air content of core specimens determined by the authorized laboratory under ASTM C 457 for acceptance.

40-1.01D(7)(a)(iii) Dowel and Tie Bar Placement

For JPCP, drill cores under section 40-1.03P for the Department's acceptance testing.

The Engineer identifies which joint and dowel or tie bar are to be tested. Core each day's paving within 2 business days. Each dowel or tie bar test consists of 2 cores, 1 on each bar end to expose both ends and allow measurement.

If the tests indicate dowel or tie bars are not placed within the specified tolerances or if there is unconsolidated concrete around the dowel or tie bars, core additional specimens identified by Engineer to determine the limits of unacceptable work.

40-1.01D(7)(a)(iv) Thickness

Drill cores under section 40-1.03P for the Department's acceptance testing in the primary area, which is the area placed in 1 day for each thickness. Core at locations determined by the Engineer and in the Engineer's presence.

Do not core until any grinding has been completed.

The core specimen diameter must be 4 inches. To identify the limits of concrete pavement deficient in thickness by more than 0.05 foot, you may divide primary areas into secondary areas. The Engineer measures cores under California Test 531 to the nearest 0.01 foot. Core at least 1 foot from existing, contiguous, and parallel concrete pavement not constructed as part of this Contract.

You may request the Engineer make additional thickness measurements and use them to determine the average thickness variation. The Engineer determines the locations with random sampling methods.

If each thickness measurement in a primary area is less than 0.05 foot deficient, the Engineer calculates the average thickness deficiency in that primary area. The Engineer uses 0.02 foot for a thickness difference more than 0.02 foot over the specified thickness.

For each thickness measurement in a primary area deficient by more than 0.05 foot, the Engineer determines a secondary area where the thickness deficiency is more than 0.05 foot. The Engineer determines this secondary area by measuring the thickness of each concrete pavement slab adjacent to

the measurement found to be more than 0.05 foot deficient. The Engineer continues to measure the thickness until an area that is bound by slabs with thickness deficient by 0.05 foot or less is determined.

Slabs without bar reinforcement are defined by the areas bound by longitudinal and transverse joints and concrete pavement edges. Slabs with bar reinforcement are defined by the areas bound by longitudinal joints and concrete pavement edges and 15-foot lengths. Secondary area thickness measurements in a slab determine that entire slab's thickness.

The Engineer measures the remaining primary area thickness after removing the secondary areas from consideration for determining the average thickness deficiency.

40-1.01D(7)(a)(v)–40-1.01D(7)(a)(ix) Reserved

40-1.01D(7)(b) Acceptance Criteria

40-1.01D(7)(b)(i) General

Reserved

40-1.01D(7)(b)(ii) Modulus of Rupture

For field qualification, the modulus of rupture at no later than 28 days must be at least:

1. 550 psi for each single beam
2. 570 psi for the average of 5 beams

For production, the modulus of rupture for the average of the individual test results of 2 beams aged for 28 days must be at least 570 psi.

40-1.01D(7)(b)(iii) Air Content

The air content must be within ±1.5 percent of the specified value. If no value is specified, the air content must be within ±1.5 percent of, the value used for your approved mix design.

40-1.01D(7)(b)(iv) Bar Reinforcement

In addition to requirements of Section 52, bar reinforcement must be more than 1/2 inch below the saw cut depth at concrete pavement joints.

40-1.01D(7)(b)(v) Dowel Bar and Tie Bar Placement

Tie bar placement must comply with the tolerances shown in the following table:

Tie Bar Tolerance

Dimension	Tolerance
Horizontal and vertical skew	5 1/4 inch, max
Longitudinal translation	± 2 inch
Horizontal offset (embedment)	± 2 inch
Vertical depth	1. At least 1/2 inch below the bottom of the saw cut 2. When measured at any point along the bar, not less than 2 inches clear of the pavement's surface and bottom

NOTE: Tolerances are measured relative to the completed joint.

Dowel bar placement must comply with the tolerances shown in the following table:

Dowel Bar Tolerances

Dimension	Tolerance
Horizontal offset	±1 inch
Longitudinal translation	±2 inch
Horizontal skew	5/8 inch, max
Vertical skew	5/8 inch, max
Vertical depth	The minimum distance measured from concrete pavement surface to any point along the top of dowel bar must be: DB + 1/2 inch where: DB = one third of pavement thickness in inches, or the saw cut depth, whichever is greater The maximum distance below the depth shown must be 5/8 inch.

NOTE: Tolerances are measured relative to the completed joint.

The Engineer determines the limits for removal and replacement.

40-1.01D(7)(b)(vi) Pavement Thickness

Concrete pavement thickness must not be deficient by more than 0.05 foot.

The minimum thickness is not reduced for specifications that may affect concrete pavement thickness such as allowable tolerances for subgrade construction.

The Engineer determines the areas of noncompliant pavement, the thickness deficiencies, and the limits where removal is required.

Pavement with an average thickness deficiency less than 0.01 foot is acceptable. If the thickness deficiency is 0.01 foot or more and less than 0.05 foot, you may request authorization to leave the pavement in place and accept a pay adjustment. If the deficiency is more than 0.05 foot the pavement must be removed and replaced.

40-1.01D(7)(b)(vii) Pavement Smoothness

Where testing with an IP is required, the pavement surface must have:

1. No areas of localized roughness with an IRI greater than 120 in/mi
2. MRI of 60 in/mi or less within a 0.1 mile section

Where testing with a straightedge is required, the pavement surface must not vary from the lower edge of the straightedge by more than:

1. 0.01 foot when the straightedge is laid parallel with the centerline
2. 0.02 foot when the straightedge is laid perpendicular to the centerline and extends from edge to edge of a traffic lane
3. 0.02 foot when the straightedge is laid within 24 feet of a pavement conform

40-1.01D(7)(b)(viii) Coefficient of Friction

Initial and final texturing must produce a coefficient of friction of at least 0.30. Do not open the pavement to traffic unless the coefficient of friction is at least 0.30.

40-1.01D(7)(b)(ix)–40-1.01D(7)(b)(xii) Reserved

40-1.02 MATERIALS

40-1.02A General

Water for coring must comply with section 90.

Tack coat must comply with section 39.

40-1.02B Concrete

40-1.02B(1) General

PCC for pavement must comply with section 90-1 except as otherwise specified.

40-1.02B(2) Cementitious Material

Concrete must contain from 505 pounds to 675 pounds cementitious material per cubic yard. The specifications for reducing cementitious material content in section 90-1.02E(2) do not apply .

40-1.02B(3) Aggregate

Aggregate must comply with section 90-1.02C except the specifications for reduction in operating range and contract compliance for cleanness value and sand equivalent specified in section 90-1.02C(2) and section 90-1.02C(3) do not apply.

For coarse aggregate in high desert and high mountain climate regions, the loss must not exceed 25 percent when tested under California Test 211 with 500 revolutions.

For combined aggregate gradings, the difference between the percent passing the 3/8-inch sieve and the percent passing the no. 8 sieve must not be less than 16 percent of the total aggregate.

40-1.02B(4) Air Entrainment

The second paragraph of section 90-1.02I(2)(a) does not apply.

For a project shown in the low and south mountain climate regions, add air-entraining admixture to the concrete at the rate required to produce an air content of 4 percent in the freshly mixed concrete.

For a project shown in the high desert and high mountain climate regions, add air-entraining admixture to the concrete at the rate required to produce an air content of 6 percent in the freshly mixed concrete.

40-1.02B(5)–40-1.02B(8) Reserved

40-1.02C Reinforcement, Bars, and Baskets

40-1.02C(1) Bar Reinforcement

Bar reinforcement must be deformed bars.

If the project is not shown to be in high desert or any mountain climate region, bar reinforcement must comply with section 52.

If the project is shown to be in high desert or any mountain climate regions, bar reinforcement must be one of the following:

1. Epoxy-coated bar reinforcement under section 52-2.03B except bars must comply with either ASTM A 706/A 706M; ASTM A 996/A 996M; or ASTM A 615/A 615M, Grade 40 or 60. Bars must be handled under ASTM D 3963/D 3963M and section 52-2.02C.
2. Low carbon, chromium steel bar complying with ASTM A 1035/A 1035M

40-1.02C(2) Dowel Bars

Dowel bars must be plain bars. Fabricate, sample, and handle epoxy-coated dowel bars under ASTM D 3963/D 3963M and section 52-2.03C except each sample must be 18 inches long.

If the project is not shown to be in high desert or any mountain climate region, dowel bars must be one of the following:

1. Epoxy-coated bars. Bars must comply with ASTM A 615/A 615M, Grade 40 or 60. Epoxy coating must comply with either section 52-2.02B or 52-2.03B.

2. Stainless-steel bars. Bars must be descaled solid stainless-steel bars under ASTM A 955/A 955M, UNS Designation S31603 or S31803.
3. Low carbon, chromium-steel bars under ASTM A 1035/A 1035M.

If the project is shown to be in high desert or any mountain climate region, dowel bars must be one of the following:

1. Epoxy-coated bars. Bars must comply with ASTM A 615/A 615M, Grade 40 or 60. Epoxy coating must comply with section 52-2.03B.
2. Stainless-steel bars. Bars must be descaled solid stainless-steel bars under ASTM A 955/A 955M, UNS Designation S31603 or S31803.

40-1.02C(3) Tie Bars

Tie bars must be deformed bars.

If the project is not shown to be in high desert or any mountain climate region, tie bars must be one of the following:

1. Epoxy-coated bar reinforcement. Bars must comply with either section 52-2.02B or 52-2.03B except bars must comply with either ASTM A 706/A 706M; ASTM A 996/A 996M; or ASTM A 615/A 615M, Grade 40 or 60.
2. Stainless-steel bars. Bars must be descaled solid stainless-steel bars under ASTM A 955/A 955M, UNS Designation S31603 or S31803.
3. Low carbon, chromium-steel bars under ASTM A 1035/A 1035M.

If the project is shown to be in high desert or any mountain climate region, tie bars must be one of the following:

1. Epoxy-coated bar reinforcement. Bars must comply with section 52-2.03B except bars must comply with either ASTM A 706/A 706M; ASTM A 996/A 996M; or ASTM A 615/A 615M, Grade 40 or 60.
2. Stainless-steel bars. Bars must be descaled solid stainless-steel bars under ASTM A 955/A 955M, UNS Designation S31603 or S31803.

Fabricate, sample, and handle epoxy-coated tie bars under ASTM D 3963/D 3963M, section 52-2.02, or section 52-2.03.

Do not bend tie bars.

40-1.02C(4) Dowel and Tie Bar Baskets

For dowel and tie bar baskets, wire must comply with ASTM A 82/A 82M and be welded under ASTM A 185/A 185M, Section 7.4. The minimum wire-size no. is W10. Use either U-frame or A-frame shaped assemblies.

If the project is not shown to be in high desert or any mountain climate region, baskets may be epoxy-coated, and the epoxy coating must comply with either section 52-2.02B or 52-2.03B.

If the project is shown to be in high desert or any mountain climate region, wire for dowel bar and tie bar baskets must be one of the following:

1. Epoxy-coated wire complying with section 52-2.03B
2. Stainless-steel wire. Wire must be descaled solid stainless-steel. Wire must comply with (1) the chemical requirements in ASTM A 276/A 276M, UNS Designation S31603 or S31803 and (2) the tension requirements in ASTM A 1022/ A 1022M.

Handle epoxy-coated tie bar and dowel bar baskets under ASTM D 3963/D 3963M and either section 52-2.02 or 52-2.03.

Fasteners must be driven fasteners under ASTM F 1667. Fasteners on lean concrete base or HMA must have a minimum shank diameter of 3/16 inch and a minimum shank length of 2-1/2 inches. For asphalt treated permeable base or cement treated permeable base, the shank diameter must be at least 3/16 inch and the shank length must be at least 5 inches.

Fasteners, clips, and washers must have a minimum 0.2-mil thick zinc coating applied by either electroplating or galvanizing.

40-1.02D Dowel Bar Lubricant

Dowel bar lubricant must be petroleum paraffin based or a curing compound. Paraffin-based lubricant must be Dayton Superior DSC BB-Coat or Valvoline Tectyl 506 or an approved equal and must be factory-applied. Curing compound must be curing compound no. 3.

40-1.02E Joint Filler

Joint filler for isolation joint must be preformed expansion joint filler for concrete (bituminous type) under ASTM D 994.

40-1.02F Curing Compound

Curing compound must be curing compound no. 1 or 2.

40-1.02G Nonshrink Hydraulic Cement Grout

Nonshrink hydraulic cement grout must comply with ASTM C 1107/C 1107M. Clean, uniform, rounded aggregate filler may be used to extend the grout. Aggregate filler must not exceed 60 percent of the grout mass or the maximum recommended by the manufacturer, whichever is less. Aggregate filler moisture content must not exceed 0.5 percent when tested under California Test 223 or California Test 226. Aggregate filler tested under California Test 202 must comply with the grading shown in the following table:

Aggregate Filler Grading

Sieve size	Percentage passing
1/2-inch	100
3/8-inch	85–100
No. 4	10–30
No. 8	0–10
No. 16	0–5

40-1.02H Temporary Roadway Pavement Structure

Temporary roadway pavement structure must comply with section 41-1.02E.

40-1.02I–40-1.02N Reserved

40-1.03 CONSTRUCTION

40-1.03A General

Aggregate and bulk cementitious material must be proportioned by weight by means of automatic proportioning devices of approved types.

For widenings and lane reconstruction, construct only the portion of pavement where the work will be completed during the same lane closure. If you fail to complete the construction during the same lane closure, construct a temporary pavement structure under section 41-1.

40-1.03B Water Supply

Before placing concrete pavement, develop enough water supply.

40-1.03C Test Strips

Construct a test strip for each type of pavement with a quantity of more than 2,000 cu yd. Obtain authorization of the test strip before constructing pavement. Test strips must be:

1. 700 to 1,000 feet long
2. Same width as the planned paving, and
3. Constructed using the same equipment proposed for paving

The Engineer selects from 6 to 12 core locations for dowel bars and up to 6 locations for tie bars per test strip. If you use mechanical dowel bar inserters, the test strip must demonstrate they do not leave voids, segregations, or surface irregularities such as depressions, dips, or high areas.

Test strips must comply with the acceptance criteria for:

1. Smoothness, except IP is not required
2. Dowel bars and tie bars placement
3. Pavement thickness
4. Final finishing, except the coefficient of friction is not considered

Allow 3 business days for evaluation. If the test strip is noncompliant, stop paving and submit a plan for changed materials, methods, or equipment. Allow 3 business days for authorization of the plan. Construct another test strip per the authorized plan.

Remove and dispose of noncompliant test strips.

If the test strip is compliant except for smoothness and final finishing, you may grind the surface. After grinding retest the test strip smoothness under section 40-1.01D(6)(c).

If the test strip is compliant for smoothness and thickness, construction of an additional test strip is not required and the test strip may remain in place.

Construct additional test strips if you:

1. Propose different paving equipment including:
    1.1. Paver
    1.2. Dowel bar inserter
    1.3. Tie bar inserter
    1.4. Tining
    1.5. Curing equipment
2. Change concrete mix proportions

You may request authorization to eliminate the test strip if you use paving equipment and personnel from a Department project (1) for the same type of pavement and (2) completed within the past 12 months. Submit supporting documents and previous project information with your request.

40-1.03D Joints

40-1.03D(1) General

Do not bend tie bars or reinforcement in existing concrete pavement joints.

For contraction joints and isolation joints, saw cut a groove with a power-driven saw. After cutting, immediately wash slurry from the joint with water at less than 100 psi pressure.

Keep joints free from foreign material including soil, gravel, concrete, and asphalt. To keep foreign material out of the joint, you may use filler material. Filler material must not react adversely with the concrete or cause concrete pavement damage. After sawing and washing, install filler material that keeps moisture in the adjacent concrete during the 72 hours after paving. If you install filler material, the specifications for spraying the sawed joint with additional curing compound in section 40-1.03K does not apply. If using absorptive filler material, moisten the filler immediately before or after installation.

40-1.03D(2) Construction Joints

Construction joints must be vertical.

Before placing fresh concrete against hardened concrete, existing concrete pavement, or structures, apply curing compound no. 1 or 2 to the vertical surface of the hardened concrete, existing concrete pavement, or structures and allow it to dry.

At joints between concrete pavement and HMA, apply tack coat between the concrete pavement and HMA.

Use a metal or wooden bulkhead to form transverse construction joints. If dowel bars are described, the bulkhead must allow dowel bar installation.

40-1.03D(3) Contraction Joints

Saw contraction joints before cracking occurs and after the concrete is hard enough to saw without spalling, raveling, or tearing.

Saw cut using a power saw with a diamond blade. After cutting, immediately wash slurry from the joint with water at less than 100 psi pressure.

Except for longitudinal joints parallel to a curving centerline, transverse and longitudinal contraction joints must not deviate by more than 0.1 foot from either side of a 12-foot straight line

Cut transverse contraction joints within 0.5 foot of the spacing described. Adjust spacing if needed such that slabs are at least 10 feet long.

For widenings, do not match transverse contraction joints with existing joint spacing or skew unless otherwise described.

Cut transverse contraction joints straight across the full concrete pavement width, between isolation joints and edges of pavement. In areas of converging and diverging pavements, space transverse contraction joints such that the joint is continuous across the maximum pavement width. Longitudinal contraction joints must be parallel with the concrete pavement centerline, except when lanes converge or diverge.

40-1.03D(4) Isolation Joints

Before placing concrete at isolation joints, prepare the existing concrete face and secure joint filler. Prepare by saw cutting and making a clean flat vertical surface. Make the saw cut the same depth as the depth of the new pavement.

40-1.03E Bar Reinforcement

Place bar reinforcement under section 52.

40-1.03F Dowel Bar Placement

If using curing compound as lubricant, apply the curing compound to dowels in 2 separate applications. Lubricate each dowel bar entirely before placement. The last application must be applied not more than 8 hours before placing the dowel bars. Apply each curing compound application at a rate of 1 gallon per 150 square feet.

Install dowel bars using one of the following methods:

1. Drill and bond bars. Comply with section 41-10.
2. Mechanical insertion. Eliminate evidence of the insertion by reworking the concrete over the dowel bars.
3. Dowel bar baskets. Anchor baskets with fasteners. Use at least 1 fastener per foot for basket sections. Baskets must be anchored at least 200 feet in advance of the concrete placement activity unless your waiver request is authorized. If requesting a waiver, describe the construction limitations or restricted access preventing the advanced anchoring. After the baskets are anchored and before the concrete is placed, cut and remove temporary spacer wires and demonstrate the dowel bars do not move from their specified depth and alignment during concrete placement.

If dowel bars are noncompliant, stop paving activities, demonstrate your correction, and obtain verbal approval from the Engineer.

40-1.03G Tie Bar Placement

Install tie bars at longitudinal joints using one of the following methods:

1. Drill and bond bars. Comply with section 41-10.
2. Insert bars. Mechanically insert tie bars into plastic slip-formed concrete before finishing. Inserted tie bars must have full contact between the bar and the concrete. Eliminate evidence of the insertion by reworking the concrete over the tie bars.
3. Threaded couplers. Threaded tie bar splice couplers must be fabricated from deformed bar reinforcement and free of external welding or machining.
4. Tie bar baskets. Anchor baskets at least 200 feet in advance of pavement placement activity. If you request a waiver, describe the construction limitations or restricted access preventing the advanced

anchoring. After the baskets are anchored and before paving, demonstrate the tie bars do not move from their specified depth and alignment during paving. Use fasteners to anchor tie bar baskets.

If tie bars are noncompliant, stop paving activities, demonstrate your correction, and obtain verbal approval from the Engineer.

40-1.03H Placing Concrete

40-1.03H(1) General

Immediately prior to placing concrete, the surface to receive concrete must be:

1. In compliance with specified requirements, including compaction and elevation tolerances
2. Free of loose and extraneous material
3. Uniformly moist, but free of standing or flowing water

Place concrete pavement with stationary side forms or slip-form paving equipment.

Place consecutive concrete loads within 30 minutes of each other. Construct a transverse construction joint when concrete placement is interrupted by more than 30 minutes. The transverse construction joint must coincide with the next contraction joint location, or you must remove fresh concrete pavement to the preceding transverse joint location.

Place concrete pavement in full slab widths separated by construction joints or monolithically in multiples of full lane widths with a longitudinal contraction joint at each traffic lane line.

Do not retemper concrete.

If the concrete pavement surface width is constructed as specified, you may construct concrete pavement sides on a batter not flatter than 6:1 (vertical:horizontal).

40-1.03H(2) Paving Adjacent to Existing Concrete Pavement

Where pavement is placed adjacent to existing concrete pavement:

1. Grinding adjacent pavement must be completed before placing the pavement
2. Use paving equipment with padded crawler tracks or rubber-tired wheels with enough offset to prevent damage
3. Match pavement grade with the elevation of existing concrete pavement after grinding.

40-1.03H(3) Concrete Pavement Transition Panel

For concrete pavement placed in a transition panel, texture the surface with a drag strip of burlap, broom, or spring steel tine device that produces scoring in the finished surface. Scoring must be either parallel or transverse to the centerline. Texture at the time that produces the coarsest texture.

40-1.03H(4) Stationary Side Form Construction

Stationary side forms must be straight and without defects including warps, bends, and indentations. Side forms must be metal except at end closures and transverse construction joints where other materials may be used.

You may build up side forms by attaching a section to the top or bottom. If attached to the top of metal forms, the attached section must be metal.

The side form's base width must be at least 80 percent of the specified concrete pavement thickness.

Side forms including interlocking connections with adjoining forms must be rigid enough to prevent springing from subgrading and paving equipment and concrete pressure.

Construct subgrade to final grade before placing side forms. Side forms must bear fully on the foundation throughout their length and base width. Place side forms to the specified grade and alignment of the finished concrete pavement's edge. Support side forms during concrete placing, compacting, and finishing.

After subgrade work is complete and immediately before placing concrete, true side forms and set to line and grade for a distance that avoids delays due to form adjustment.

Clean and oil side forms before each use.

Side forms must remain in place for at least 1 day after placing concrete and until the concrete pavement edge no longer requires protection from the forms.

Spread, screed, shape, and consolidate concrete with 1 or more machines. The machines must uniformly distribute and consolidate the concrete. The machines must operate to place the concrete pavement to the specified cross section with minimal hand work.

Consolidate the concrete without segregation. If vibrators are used:

1. The vibration rate must be at least 3,500 cycles per minute for surface vibrators and 5,000 cycles per minute for internal vibrators
2. Amplitude of vibration must cause perceptible concrete surface movement at least 1 foot from the vibrating element
3. Use a calibrated tachometer for measuring frequency of vibration
4. Vibrators must not rest on side forms or new concrete pavement
5. Power to vibrators must automatically cease when forward or backward motion of the paving machine is stopped
6. Uniformly consolidate the concrete across the paving width including adjacent to forms by using high-frequency internal vibrators within 15 minutes of depositing concrete on the subgrade
7. Do not shift the mass of concrete with vibrators.

40-1.03H(5) Slip-Form Construction

If slip-form construction is used, spread, screed, shape, and consolidate concrete to the specified cross section with slip-form machines and minimal hand work. Slip-form paving machines must be equipped with traveling side forms and must not segregate the concrete.

Do not deviate from the specified concrete pavement alignment by more than 0.1 foot.

Slip-form paving machines must use high frequency internal vibrators to consolidate concrete. You may mount vibrators with their axes parallel or normal to the concrete pavement alignment. If mounted with axes parallel to the concrete pavement alignment, space vibrators no more than 2.5 feet measured center to center. If mounted with axes normal to the concrete pavement alignment, space the vibrators with a maximum 0.5-foot lateral clearance between individual vibrators.

Each vibrator must have a vibration rate from 5,000 to 8,000 cycles per minute. The amplitude of vibration must cause perceptible concrete surface movement at least 1 foot from the vibrating element. Use a calibrated tachometer to measure frequency of vibration.

40-1.03I Edge Treatment

Construct edge treatments as shown. Regrade when required for the preparation of safety edge areas.

Sections 40-1.03J(2) and 40-1.03J(3) do not apply to safety edges.

For safety edges placed after the concrete pavement is complete, concrete may comply with the requirements for minor concrete.

For safety edges placed after the concrete pavement is complete, install connecting bar reinforcement under section 52.

Saw cutting or grinding may be used to construct safety edges.

For safety edges, the angle of the slope must not deviate by more than ± 5 degrees from the angle shown. Measure the angle from the plane of the adjacent finished pavement surface.

40-1.03J Finishing

40-1.03J(1) General

Reserved

40-1.03J(2) Preliminary Finishing

40-1.03J(2)(a) General

Preliminary finishing must produce a smooth and true-to-grade finish. After preliminary finishing, mark each day's paving with a stamp. The stamp must be authorized before paving starts. The stamp must be approximately 1 by 2 feet in size. The stamp must form a uniform mark from 1/8 to 1/4 inch deep. Locate the mark 20 ± 5 feet from the transverse construction joint formed at each day's start of paving and 1 ± 0.25 foot from the pavement's outside edge. The stamp mark must show the month, day, and year of placement and the station of the transverse construction joint. Orient the stamp mark so it can be read from the pavement's outside edge.

Do not apply water to the pavement surface before float finishing.

40-1.03J(2)(b) Stationary Side Form Finishing

If stationary side form construction is used, give the pavement a preliminary finish by the machine float method or the hand method.

If using the machine float method:

1. Use self-propelled machine floats.
2. Determine the number of machine floats required to perform the work at a rate equal to the pavement delivery rate. If the time from paving to machine float finishing exceeds 30 minutes, stop pavement delivery. When machine floats are in proper position, you may resume pavement delivery and paving.
3. Run machine floats on side forms or adjacent pavement lanes. If running on adjacent pavement, protect the adjacent pavement surface under section 40-1.03L. Floats must be hardwood, steel, or steel-shod wood. Floats must be equipped with devices that adjust the underside to a true flat surface.

If using the hand method, finish pavement smooth and true to grade with manually operated floats or powered finishing machines.

40-1.03J(2)(c) Slip-Form Finishing

If slip-form construction is used, the slip-form paver must give the pavement a preliminary finish. You may supplement the slip-form paver with machine floats.

Before the pavement hardens, correct pavement edge slump in excess of 0.02 foot exclusive of edge rounding.

40-1.03J(3) Final Finishing

After completing preliminary finishing, round the edges of the initial paving widths to a 0.04-foot radius. Round transverse and longitudinal construction joints to a 0.02-foot radius.

Before curing, texture the pavement. Perform initial texturing with a burlap drag or broom device that produces striations parallel to the centerline. Perform final texturing with a steel-tined device that produces grooves parallel with the centerline.

Construct longitudinal grooves with a self-propelled machine designed specifically for grooving and texturing pavement. The machine must have tracks to maintain constant speed, provide traction, and maintain accurate tracking along the pavement surface. The machine must have a single row of rectangular spring steel tines. The tines must be from 3/32 to 1/8 inch wide, on 3/4-inch centers, and must have enough length, thickness, and resilience to form grooves approximately 3/16 inch deep. The machine must have horizontal and vertical controls. The machine must apply constant down pressure on the pavement surface during texturing. The machines must not cause raveling.

Construct grooves over the entire pavement width in a single pass except do not construct grooves 3 inches from the pavement edges and longitudinal joints. Final texture must be uniform and smooth. Use a guide to properly align the grooves. Grooves must be parallel and aligned to the pavement edge across the pavement width. Grooves must be from 1/8 to 3/16 inch deep after the pavement has hardened.

For irregular areas and areas inaccessible to the grooving machine, you may hand-construct grooves using the hand method. Hand-constructed grooves must comply with the specifications for machine-constructed grooves.

For ramp termini, use heavy brooming normal to the ramp centerline to produce a coefficient of friction of at least 0.35 determined on the hardened surface under California Test 342.

40-1.03K Curing

Cure the concrete pavement's exposed area under section 90-1.03B using the waterproof membrane method or curing compound method. If using the curing compound method use curing compound no. 1 or 2. When side forms are removed within 72 hours of the start of curing, also cure the concrete pavement edges.

Apply curing compound with mechanical sprayers. Reapply curing compound to saw cuts and disturbed areas.

40-1.03L Protecting Concrete Pavement

Protect concrete pavement under section 90-1.03C.

Maintain the concrete pavement surface temperature at not less than 40 degrees F for the initial 72 hours.

Protect the concrete pavement surface from activities that cause damage and reduce texture and coefficient of friction. Do not allow soil, gravel, petroleum products, concrete, or asphalt mixes on the concrete pavement surface.

Construct crossings for traffic convenience. If authorized, you may use RSC for crossings. Do not open crossings until the Department determines that the pavement's modulus of rupture is at least 550 psi under California Test 523 or California Test 524.

Do not open concrete pavement to traffic or use equipment on the concrete pavement for 10 days after paving nor before the concrete has attained a modulus of rupture of 550 psi based on Department’s testing except:

1. If the equipment is for sawing contraction joints
2. If authorized, one side of paving equipment's tracks may be on the concrete pavement after a modulus of rupture of 350 psi has been attained, provided:
   - 2.1. Unit pressure exerted on the concrete pavement by the paver does not exceed 20 psi
   - 2.2. You change the paving equipment tracks to prevent damage or the paving equipment tracks travel on protective material such as planks
   - 2.3. No part of the track is closer than 1 foot from the concrete pavement's edge

If concrete pavement damage including visible cracking occurs, stop operating paving equipment on the concrete pavement and repair the damage.

40-1.03M Early Use of Concrete Pavement

If requesting early use of concrete pavement:

1. Furnish molds and machines for modulus of rupture testing
2. Sample concrete
3. Fabricate beam specimens
4. Test for modulus of rupture under California Test 523

If you request early use, concrete pavement must have a modulus of rupture of at least 350 psi. Protect concrete pavement under section 40-1.03L.

40-1.03N Reserved

40-1.03O Shoulder Rumble Strip

40-1.03O(1) General

Construct shoulder rumble strips by rolling or grinding indentations in new concrete pavement.

Do not construct shoulder rumble strips on structures or approach slabs.

Construct rumble strips within 2 inches of the specified alignment. Rumble strip equipment must be equipped with a sighting device enabling the operator to maintain the rumble strip alignment.

Indentations must not vary from the specified dimensions by more than 1/16 inch in depth nor more than 10 percent in length and width.

Grind or remove and replace noncompliant rumble strip indentations at locations determined by the Engineer. Ground surface areas must be neat and uniform in appearance.

Remove grinding residue under section 42-1.03B.

40-1.03O(2) Rolled-In Indentations

Construct rolled-in indentations before final concrete set. Indentation construction must not displace adjacent concrete.

40-1.03O(3) Ground-In Indentations

Concrete pavement must be hardened before grinding rumble strips indentations. Do not construct indentations until the following occurs:

1. 10 days elapse after concrete placement
2. Concrete has developed a modulus of rupture of 550 psi determined under California Test 523,

40-1.03P Drilling Cores

Drill concrete pavement cores under ASTM C 42/C 42M. Use diamond impregnated drill bits.

Clean, dry, and fill core holes with hydraulic cement grout (nonshrink) or pavement concrete. Coat the core hole walls with epoxy adhesive for bonding new concrete to old concrete under section 95. Finish the backfill to match the adjacent surface elevation and texture.

40-1.03Q Pavement Repair and Replacement

40-1.03Q(1) General

If surface raveling or full-depth cracks occur within one year of Contract acceptance, repair or replace the pavement under section 6-3.06.

Repair and replace pavement in the following sequence:

1. Replace pavement
2. Repair spall, ravel, and working cracks
3. Correct smoothness and coefficient of friction
4. Treat partial depth cracks
5. Replace damaged joint seals under section 41-5

In addition to removing pavement for other noncompliance, remove and replace JPCP slabs that:

1. Have one or more full depth crack
2. Have raveled surfaces such that either:
   - 2.1. Combined raveled areas are more than 5 percent of the total slab area
   - 2.2. Single area is more than 4 sq ft

Remove and replace JPCP 3 feet on both sides of a joint with a rejected dowel bar.

40-1.03Q(2) Spall and Ravel Repair

Repair spalled or raveled areas that are:

1. Deeper than 0.05 foot
2. Wider than 0.10 foot
3. Longer than 0.3 foot

Repairs must comply with section 41-4 and be completed before opening pavement to traffic.

40-1.03Q(3) Crack Repair

Treat partial depth cracks for JPCP under section 41-3.

If the joints are sealed, repair working cracks by routing and sealing. Use a powered rotary router mounted on wheels, with a vertical shaft and a routing spindle that casters as it moves along the crack. Form a reservoir 3/4 inch deep by 3/8 inch wide in the crack. Equipment must not cause raveling nor spalling

Treat the contraction joint adjacent to the working crack by either:

1. Epoxy resin under ASTM C 881/C 881M, Type IV, Grade 2
2. Pressure injecting epoxy resin under ASTM C 881/C881M, Type IV, Grade 1

40-1.03Q(4) Smoothness and Friction Correction

Correct pavement that is noncompliant for:

1. Smoothness by grinding under section 42-3
2. Coefficient of friction by grooving or grinding under section 42

Do not start corrective work until:

1. Pavement has cured 10 days
2. Pavement has at least a 550 psi modulus of rupture
3. Your corrective method is authorized

Correct the entire lane width. Begin and end grinding at lines perpendicular to the roadway centerline. The corrected area must have a uniform texture and appearance.

If corrections are made within areas where testing with an IP is required, retest the entire lane length with an IP under sections 40-1.01D(6)(c) and 40-1.01D(7)(b)(vii).

If corrections are made within areas where testing with a 12-foot straightedge is required, retest the corrected area with a straightedge under sections 40-1.01D(6)(c) and 40-1.01D(7)(b)(vii).

Allow 25 days for the Department's coefficient of friction retesting.

40-1.03R–40-1.03U Reserved

40-1.04 PAYMENT

The payment quantity for pavement is based on the dimensions shown.

The deduction for pavement thickness deficiency in each primary area is shown in the following table:

Deduction for Thickness Deficiency

Average thickness deficiency (foot)[a]	Deduction($/sq yd)
0.01	0.90
0.02	2.30
0.03	4.10
0.04	6.40
0.05	9.11

[a]Values greater than 0.01 are rounded to the nearest 0.01 foot.

Shoulder rumble strips are measured by the station along each shoulder on which the rumble strips are constructed without deductions for gaps between indentations.

If the initial cores show that dowel bars or tie bars are within alignment tolerances and the Engineer orders more dowel or tie bar coring, the additional cores are paid for as change order work.

The Department does not pay for additional coring to check dowel or tie bar alignment which you request.

If the Engineer accepts a test strip and it remains as part of the paving surface, the test strip is paid for as the type of pavement involved.

If the curvature of a slab affects tie bar spacing and additional tie bars are required, no additional payment is made for the additional tie bars.

Payment for grinding existing pavement is not included in the payment for the type of pavement involved.

40-2 CONTINUOUSLY REINFORCED CONCRETE PAVEMENT

40-2.01 GENERAL

40-2.01A Summary

Section 40-2 includes specifications for constructing CRCP.

Terminal joints include saw cutting, dowel bars, drill and bond dowel bars, support slab, support slab reinforcement, tack coat, and temporary hot mix asphalt.

Expansion joints include polystyrene, support slab, support slab reinforcement, dowel bars, drill and bond dowel bars, and bond breaker.

Wide flange beam terminals include polyethylene foam, support slab, and support slab reinforcement.

Pavement anchors include cross drains, anchor reinforcement, filter fabric, and permeable material.

40-2.01B Definitions

Reserved

40-2.01C Submittals

Reserved

40-2.01D Quality Control and Assurance

40-2.01D(1) General

Reserved

40-2.01D(2) Testing for Coefficient of Thermal Expansion

For field qualification, test coefficient of thermal expansion under AASHTO T 336. The coefficient of thermal expansion must not exceed 6.0 microstrain/degree Fahrenheit.

40-2.02 MATERIALS

40-2.02A General

Class 1 permeable material, filter fabric, and slotted plastic pipe cross drain as shown for pavement anchors must comply with section 68-3.

40-2.02B Concrete

Concrete for terminal joints, support slabs, and pavement anchors must comply with section 40-1.02.

40-2.02C Transverse Bar Assembly

Instead of transverse bar and other support devices, you may use transverse bar assemblies to support longitudinal bar. Bar reinforcement and wire must comply with section 40-1.02C.

40-2.02D Wide Flange Beam

Wide flange beams and studs must be either rolled structural steel shapes under ASTM A 36/A 36M or structural steel under ASTM A 572/A 572M.

40-2.02E Joints

Joint seals for wide flange beam terminals must comply with section 51-2.02.

Joint seals for transverse expansion joints must comply with section 51-2.02.

Expanded polystyrene for transverse expansion joints must comply with section 51-2.01B(1).

40-2.03 CONSTRUCTION

40-2.03A General

Reserved

40-2.03B Test Strips

Comply with section 40-1.03C except during the evaluation, the Engineer visually checks reinforcement, dowel and tie bar placement.

40-2.03C Construction Joints

Transverse construction joints must be perpendicular to the lane line. Construct joints to allow for lap splices of the longitudinal bar. Comply with the lap splice lengths shown for CRCP.

Clean construction joint surfaces before placing fresh concrete against the joint surfaces. Remove surface laitance, curing compound, and other foreign materials.

40-2.03D Bar Reinforcement

Place bar reinforcement under section 52-1.03D, except you may request to use plastic chairs. Plastic chairs will only be considered for support directly under the transverse bars. Your request to use plastic chairs must include a sample of the plastic chair, the manufacturer's written recommendations for the applicable use and load capacity, chair spacing, and your calculation for the load on a chair for the area of bar reinforcement sitting on it. Vertical and lateral stability of the bar reinforcement and plastic chairs must be demonstrated during construction of the test strip. Obtain authorization before using the proposed plastic chairs for work after the test strip is accepted.

For transverse bar in a curve with a radius under 2,500 feet, place the reinforcement in a single continuous straight line across the lanes and aligned with the radius point as shown.

40-2.03E Wide Flange Beams

Weld stud ends with an electric arc welder completely fusing the studs to the wide flange beam. Replace studs dislodged in shipping or that can be dislodged with a hammer.

40-2.03F Repair and Replacement

40-2.03F(1) General

Requirements for repair of cracks under section 40-1.03Q do not apply to CRCP. High molecular weight methacrylate is not to be applied to cracks in CRCP.

New CRCP will be monitored for 1 year from contract acceptance or relief from maintenance, whichever is less. CRCP that develops raveling areas of 6 inches by 6 inches or greater will require partial depth repair under section 6-3.06. CRCP that develops one or more full-depth transverse cracks with faulting greater than 0.25 inch or one or more full-depth longitudinal cracks with faulting greater 0.50 inch will require full depth repair.

40-2.03F(2) Partial Depth Repair

Partial depth repair must comply with section 41-4 except:

1. Determine a rectangular boundary which extends 6 inches beyond the damaged area. The limits of saw depth must be between 2 inches from the surface to 1/2 inch above the longitudinal bars.
2. If each length of the repair boundaries is equal to or greater than 3 ft, additional reinforcement is needed for the repair area. Submit a plan for authorization before starting the repair.

40-2.03F(3) Full Depth Repair

40-2.03F(3)(a) General

Removal of CRCP must be full depth except for portion of reinforcement to remain. Provide continuity of reinforcement. Comply with section 52-6. Submit a plan for authorization, before starting the repair. Do not damage the base, concrete and reinforcement to remain. Place concrete in the removal area.

40-2.03F(3)(b) Transverse Cracks

Make initial full-depth transverse saw cuts normal to the lane line a distance of 3 feet on each side of the transverse crack.

40-2.03F(3)(c) Longitudinal Cracks

Remove the cracked area normal to the lane line for the full width of the lane a distance of 1 foot beyond the ends of the crack. You may propose alternate limits with your repair plan for authorization.

40-2.03G Reserved

40-2.04 PAYMENT

Not Used

40-3 RESERVED

40-4 JOINTED PLAIN CONCRETE PAVEMENT

40-4.01 GENERAL

40-4.01A Summary

Section 40-4 includes specifications for constructing JPCP.

40-4.01B Definitions

Reserved

40-4.01C Submittals

40-4.01C(1) General

Reserved

40-4.01C(2) Early Age Crack Mitigation System

At least 24 hours before each paving shift, submit the following information as an informational submittal:

1. Early age stress and strength predictions
2. Scheduled sawing and curing activities
3. Contingency plan if cracking occurs

40-4.01C(3)–40-4.01C(8) Reserved

40-4.01D Quality Control and Assurance

40-4.01D(1) General

Reserved

40-4.01D(2) Quality Control Plan

The QC plan must include a procedure for identifying transverse contraction joint locations relative to the dowel bars longitudinal center and a procedure for consolidating concrete around the dowel bars.

40-4.01D(3) Early Age Crack Mitigation System

For JPCP, develop and implement a system for predicting stresses and strength during the initial 72 hours after paving. The system must include:

1. Subscription to a weather service to obtain forecasts for wind speed, ambient temperatures, humidity, and cloud cover
2. Portable weather station with an anemometer, temperature and humidity sensors, located at the paving site
3. Early age concrete pavement stress and strength prediction plan
4. Analyzing, monitoring, updating, and reporting the system's predictions

40-4.01D(4)–40-4.01D(9) Reserved

40-4.02 MATERIALS

Not Used

40-4.03 CONSTRUCTION

40-4.03A General

Transverse contraction joints on a curve must be on a single straight line through the curve's radius point. If transverse joints do not align in a curve, drill a full depth 2” diameter hole under ASTM C 42/C 42M where the joint meets the adjacent slab. Fill the hole with joint filler. If joints are not sealed, avoid joint filler material penetration into the joint.

40-4.03B Repair and Replacement

If replacing concrete, saw cut and remove to full depth.

Saw cut full slabs at the longitudinal and transverse joints. Saw cut partial slabs at joints and at locations determined by the Engineer. Saw cut must be vertical.

After lifting the slab, paint the cut ends of dowels and tie bars.

Construct transverse and longitudinal construction joints between the new slab and existing concrete. If slabs are constrained at both longitudinal edges by existing pavement, use dowel bars instead of tie bars. For longitudinal joints, offset dowel bar holes from original tie bars by 3 inches. For transverse joints, offset dowel bar holes from the original dowel bar by 3 inches.

Drill and bond bars to the existing concrete. Comply with section 41-10. Clean the faces of joints and underlying base from loose material and contaminants. Coat the faces with a double application of pigmented curing compound under section 28-2.03F. For partial slab replacements, place preformed sponge rubber expansion joint filler at new transverse joints under ASTM D 1752. Place concrete in the removal area.

40-4.03C–40-4.03G Reserved

40-4.04 PAYMENT

Not Used

40-5 JOINTED PLAIN CONCRETE PAVEMENT WITH RAPID STRENGTH CONCRETE

Reserved

40-6–40-15 RESERVED

^^

41 CONCRETE PAVEMENT REPAIR

04-18-14

Replace the headings and paragraphs in section 41 with:

07-19-13

41-1 GENERAL

41-1.01 GENERAL

41-1.01A Summary

Section 41-1 includes general specifications for repairing concrete pavement.

Dowel bars must comply with section 40-1.

41-1.01B Definitions

Reserved

41-1.01C Submittals

At least 15 days before delivering fast-setting concrete, polyester resin binder, or bonding agent to the job site, submit the manufacturer’s recommendations, instructions, and MSDS. Notify the Engineer if polyester resin binder will be stored in containers over 55 gallons.

41-1.01D Quality Control and Assurance

41-1.01D(1) General

Before using polyester concrete, allow 14 days for sampling and testing of the polyester resin binder.

41-1.01D(2) Reserved

41-1.02 MATERIALS

41-1.02A General

Water for washing aggregates, mixing concrete, curing, and coring must comply with section 90-1.02D.

Use the minimum amount of water to produce workable concrete and comply with the manufacturer's instructions.

41-1.02B Fast-Setting Concrete

Fast-setting concrete must be one of the following:

1. Magnesium phosphate concrete that is either:
   1.1. Single component water activated
   1.2. Dual component with a prepackaged liquid activator
2. Modified high-alumina based concrete
3. Portland cement based concrete

Fast-setting concrete must be stored in a cool and dry environment.

If used, the addition of retarders must comply with the manufacturer's instructions.

You may use any accelerating chemical admixtures complying with ASTM C494/C494M, Type C and section 90-1.02E.

Fast-setting concrete properties must have the values shown in the following table:

Fast-Setting Concrete

Property	Test method	Value
Compressive strength[a] (psi, min)		
at 3 hours	California Test 551	3,000
at 24 hours	California Test 551	5,000
Flexural strength[a] (psi, min, at 24 hours)	California Test 551	500
Bond strength[a] (psi, min, at 24 hours)		
Saturated surface dry concrete	California Test 551	300
Dry concrete	California Test 551	400
Water absorption (%, max)	California Test 551	10
Abrasion resistance[a] (g, max, at 24 hours)	California Test 550	25
Drying shrinkage (%, max, at 4 days)	ASTM C596	0.13
Water soluble chlorides[b] (%, max, by weight)	California Test 422	0.05
Water soluble sulfates[b] (%, max, by weight)	California Test 417	0.25
Thermal stability (%, min)	California Test 553	90

[a]Perform test with aggregate filler if used.
[b]Test must be performed on a cube specimen, fabricated under California Test 551, cured at least 14 days, and then pulverized to 100% passing the no. 50 sieve.

Aggregate filler may be used to extend prepackaged concrete. Aggregate filler must:

1. Be clean and uniformly rounded.
2. Have a moisture content of 0.5-percent by weight or less when tested under California Test 226.
3. Comply with sections 90-1.02C(2) and 90-1.02C(3).
4. Not exceed 50 percent of the concrete volume or the maximum recommended by the fast-setting concrete manufacturer, whichever is less.

When tested under California Test 202, aggregate filler must comply with the grading in the following table:

Aggregate Filler Grading

Sieve size	Percentage passing
3/8 inch	100
No. 4	50–100
No. 16	0–5

41-1.02C Polyester Concrete

Polyester concrete consists of polyester resin binder and dry aggregate. The polyester resin binder must be an unsaturated isophthalic polyester-styrene copolymer.

Polyester resin binder properties must have the values shown in the following table:

Polyester Resin Binder

Property	Test method	Value
Viscosity[a] (Pa·s) RVT, No. 1 spindle, 20 RPM at 77 °F	ASTM D2196	0.075–0.200
Specific gravity[a] (77 °F)	ASTM D1475	1.05–1.10
Elongation (%, min) Type I specimen, 0.25 ± 0.03 inch thick Speed of testing = 0.45 inch/minute Condition 18/25/50+5/70: T—23/50	ASTM D638 ASTM D618	35
Tensile strength (psi, min) Type I specimen, 0.25 ± 0.03 inch thick Speed of testing = 0.45 inch/minute Condition 18/25/50+5/70: T—23/50	ASTM D638 ASTM D618	2,500
Styrene content[a] (%, by weight)	ASTM D2369	40–50
Silane coupler (%, min, by weight of polyester resin binder)	--	1.0
PCC saturated surface-dry bond strength at 24 hours and 70 ± 2 °F (psi, min)	California Test 551	500
Static volatile emissions[a] (g/sq m, max)	South Coast Air Quality Management District, Method 309-91[b]	60

[a]Perform the test before adding initiator.
[b]For the test method, go to:
http://www.aqmd.gov/tao/methods/lab/309-91.pdf

Silane coupler must be an organosilane ester, gamma-methacryloxypropyltrimethoxysilane. Promoter must be compatible with suitable methyl ethyl ketone peroxide (MEKP) and cumene hydroperoxide (CHP) initiators.

Aggregate for polyester concrete must comply with section 90-1.02C(1), 90-1.02C(2), and 90-1.02C(3).

When tested under California Test 202, the combined aggregate grading must comply with one of the gradations in the following table:

Combined Aggregate Grading

Sieve size	Percentage passing		
	A	B	C
1/2"	100	100	100
3/8"	83–100	100	100
No. 4	65–82	62–85	45–80
No. 8	45–64	45–67	35–67
No. 16	27–48	29–50	25–50
No. 30	12–30	16–36	15–36
No. 50	6–17	5–20	5–20
No. 100	0–7	0–7	0–9
No. 200	0–3	0–3	0–6

Aggregate retained on the no. 8 sieve must have a maximum of 45 percent crushed particles under California Test 205. Fine aggregate must be natural sand.

The weighted average absorption must not exceed 1 percent when tested under California Tests 206 and 207.

You may submit an alternative grading or request to use manufactured sand as fine aggregate but 100 percent of the combined grading must pass the 3/8 inch sieve. Allow 21 days for authorization.

Polyester concrete must have a minimum compressive strength of 1250 psi at 3 hours and 30 minutes under California Test 551 or ASTM C109.

41-1.02D Bonding Agent

Bonding agent must comply with the concrete manufacturer's recommendations.

41-1.02E Temporary Pavement Structure

Temporary pavement structure consists of RSC or aggregate base with HMA. RSC not conforming to the specifications may serve as temporary pavement structure if:

1. The modulus of rupture is at least 200 psi before opening to traffic
2. RSC thickness is greater than or equal to the existing concrete pavement surface layer
3. RSC is replaced during the next paving shift

Aggregate base for temporary pavement structure must comply with the 3/4-inch maximum grading specified in section 26-1.02B.

04-18-14

HMA must comply with the specifications for minor HMA in section 39.

07-19-13

41-1.02F Reserved

41-1.03 CONSTRUCTION

41-1.03A General

Repair only the portion of pavement where the work will be completed during the same lane closure. If removal is required, remove only the portion of pavement where the repair will be completed during the same traffic closure. Completion of concrete repair includes curing until the concrete attains the specified minimum properties required before opening the repaired pavement to traffic.

If you fail to complete the concrete pavement repair during the same lane closure, construct temporary pavement before opening the lane to traffic.

Before starting repair work, except saw cutting: the equipment, materials, and personnel for constructing temporary pavement structure must be at the job site or an approved location. If HMA can be delivered to the job site within 1 hour, you may request 1-hour delivery as an alternative to having the HMA at the job site.

Maintain the temporary pavement structure and replace it as a first order of work as soon as you resume concrete pavement repair work.

After removing temporary pavement structure, you may stockpile that aggregate base at the job site and reuse it for temporary pavement structure.

41-1.03B Mixing and Applying Bonding Agent

Mix and apply the bonding agent at the job site under the manufacturer's instructions and in small quantities.

Apply bonding agent after cleaning the surface and before placing concrete.

Apply a thin, even coat of bonding agent with a stiff bristle brush until the entire repair surface is scrubbed and coated with bonding agent.

41-1.03C Mixing Concrete

41-1.03C(1) General

Mix concrete in compliance with the manufacturer's instructions. For repairing spalls, mix in a small mobile drum or paddle mixer. Comply with the manufacturer's recommended limits for the quantity of aggregate filler, water, and liquid activator.

Mix the entire contents of prepackaged dual-component magnesium phosphate concrete as supplied by the manufacturer. Use the full amount of each component and do not add water to dual-component magnesium phosphate concrete.

Magnesium phosphate concrete must not be mixed in containers or worked with tools containing zinc, cadmium, aluminum, or copper.

Modified high-alumina based concrete must not be mixed in containers or worked with tools containing aluminum.

41-1.03C(2) Polyester Concrete

When mixing with resin, the moisture content of the combined aggregate must not exceed 1/2 of the average aggregate absorption when tested under California Test 226.

Proportion the polyester resin and aggregate to produce a mixture with suitable workability for the intended work. Only a minimal amount of resin may rise to the surface after finishing.

41-1.03D Placing Concrete

The pavement surface temperature must be at least 40 degrees F before placing concrete. You may propose methods to heat the surfaces.

Place magnesium phosphate concrete on a dry surface.

Place portland cement and modified high-alumina concrete on surfaces treated with a bonding agent recommended by the concrete manufacturer. If no bonding agent is recommended by the manufacturer, place concrete on damp surfaces that are not saturated.

Do not retemper concrete. Use dry finishing tools cleaned with water before working the concrete.

41-1.03E Curing Concrete

Cure concrete under the manufacturer's instructions. When curing compound is used, comply with section 90-1.03B for curing compound no. 1 or 2.

41-1.03F Reserved

41-1.04 PAYMENT

Not Used

41-2 SUBSEALING AND JACKING

41-2.01 GENERAL

41-2.01A Summary

Section 41-2 includes specifications for filling voids under existing concrete pavement.

41-2.01B Definitions

Reserved

41-2.01C Submittals

Submit shipping invoices with packaged or bulk fly ash and cement.

Before grouting activities begin, submit a proposal for the materials to be used. Include authorized laboratory test data for the grout indicating:

1. Time of initial setting under ASTM C266.
2. Compressive strength results at 1, 3, and 7 days for 10, 12, and 14-second grout efflux times.

If requesting a substitution of grout materials, submit a proposal that includes test data.

41-2.01D Quality Control and Assurance

Reserved

41-2.02 MATERIALS

41-2.02A General

Reserved

41-2.02B Grout

Grout must consist of Type II portland cement, fly ash, and water. Use from 2.4 to 2.7 parts fly ash to 1 part portland cement by weight. Use enough water to produce the following grout efflux times determined under California Test 541, Part D:

1. From 10 to 16 seconds for subsealing
2. From 10 to 26 seconds for jacking

Cement for grout must comply with the specifications for Type II portland cement in section 90-1.02B(2).

Fly ash must comply with AASHTO M 295, Class C or Class F. Fly ash sources must be on the Authorized Material List.

You may use chemical admixtures and calcium chloride. Chemical admixtures must comply with section 90-1.02E(2). Calcium chloride must comply with ASTM D98.

Test grout compressive strength under California Test 551, Part 1 at 7-days with 12 seconds efflux time. Follow the procedures for moist cure. The 7-day compressive strength must be at least 750 psi.

41-2.02C Mortar

Mortar must be a prepackaged fast-setting mortar that complies with ASTM C928.

41-2.02D Reserved

41-2.03 CONSTRUCTION

41-2.03A General

Drill holes in the pavement, inject grout, plug the holes, and finish the holes with mortar.

Drill holes through the pavement and underlying base to a depth from 15 to 18 inches below the pavement surface. The hole diameter must match the fitting for the grout injecting equipment.

41-2.03B Injecting Grout

41-2.03B(1) General

Inject grout within 2 days of drilling holes.

Immediately before injecting grout, clean the drilled holes with water at a minimum pressure of 40 psi. The cleaning device must have at least 4 jets that direct water horizontally at the slab-base interface.

Do not inject grout if the atmospheric or subgrade temperature is below 40 degrees F. Do not inject grout in inclement weather. If water is present in the holes, obtain the Engineer's authorization before injecting grout.

Do not inject grout until at least 2 consecutive slabs requiring subsealing are drilled ahead of the grouting activities.

The grout plant must have a positive displacement cement injection pump and a high-speed colloidal mixer capable of operating from 800 to 2,000 rpm. The injection pump must sustain 150 psi if pumping grout with a 12-second efflux time. A pressure gauge must be located immediately adjacent to the supply valve of the grout hose supply valve and positioned for easy monitoring.

Before mixing, weigh dry cement and fly ash if delivered in bulk. If the materials are packaged, each container must weigh the same.

Introduce water to the mixer through a meter or scale.

Inject grout under pressure until the voids under the pavement slab are filled. The injection nozzle must not leak. Do not inject grout if the nozzle is below the bottom of the slab. Inject grout 1 hole at a time.

Stop injecting grout in a hole if either:

1. Grout does not flow under a sustained pump gauge pressure of 150 psi after 7 seconds and there is no indication the slab is moving.
2. Injected grout rises to the surface at any joint or crack, or flows into an adjacent hole.

Dispose of unused grout within 1 hour of mixing.

41-2.03B(2) Subsealing

If a slab raises more than 1/16 inch due to grout injection, stop injecting grout in that hole.

41-2.03B(3) Jacking

The positive displacement pump used for grout injection must be able to provide a sustained gauge pressure of 200 psi. Gauge pressures may be from 200 to 600 psi for brief periods to start slab movement.

You may add additional water to initiate pressure injection of grout. Do not reduce the grout efflux time below 10 seconds.

Raise the slabs uniformly. Use string lines to monitor the pavement movement.

Do not move adjacent slabs not specified for pavement jacking. If you move adjacent slabs, correct the grade within the tolerances for final pavement elevation.

41-2.03B(4) Finishing

Immediately after removing the injection nozzle, plug the hole with a round, tapered wooden plug. Do not remove plugs until adjacent holes are injected with grout and no grout surfaces through previously injected holes.

After grouting, remove grout from drilled holes at least 4 inches below the pavement surface. Clean holes and fill with mortar. Finish filled holes flush with the pavement surface.

41-2.03B(5) Tolerances

The final pavement elevation must be within 0.01 foot of the required grade. If the final pavement elevation is between 0.01 and 0.10 foot higher than the required grade, grind the noncompliant pavement surface under section 42 to within 0.01 foot of the required grade.

If the final pavement elevation is higher than 0.10 foot from the required grade, remove and replace the noncompliant pavement under section 41-9.

41-2.04 PAYMENT

The payment quantity for subsealing is calculated by adding the dry weight of cement and fly ash used for the placed grout. The payment quantity for jacking is calculated by adding the dry weight of cement and fly ash used for the placed grout.

The Department does not pay for wasted grout.

The Department does not adjust the unit price for an increase or decrease in the subsealing quantity.

The Department does not adjust the unit price for an increase or decrease in the jacking quantity.

41-3 CRACK TREATMENT

41-3.01 GENERAL

41-3.01A Summary

Section 41-3 includes specifications for applying high-molecular-weight methacrylate (HMWM) to concrete pavement surface cracks that do not extend the full slab depth.

41-3.01B Definitions

Reserved

41-3.01C Submittals

41-3.01C(1) General

Submit HMWM samples 20 days before use.

If sealant is to be removed, submit the proposed removal method at least 7 days before sealant removal. Do not remove sealant until the proposed sealant removal method is authorized.

41-3.01C(2) Public Safety and Placement Plans

Before starting crack treatment, submit a public safety plan for HMWM and a placement plan for construction activity as shop drawings.

The public safety and placement plans must identify the materials, equipment, and methods to be used.

In the public safety plan, include the MSDS for each component of HMWM and details for:

1. Shipping
2. Storage
3. Handling
4. Disposal of residual HMWM and containers

If the project is in an urban area adjacent to a school or residence, the public safety plan must also include an airborne emissions monitoring plan prepared by a CIH certified in comprehensive practice by the American Board of Industrial Hygiene. Submit a copy of the CIH's certification. The CIH must monitor the emissions at a minimum of 4 points including the mixing point, the application point, and the point of nearest public contact. At work completion, submit a report by the industrial hygienist with results of the airborne emissions monitoring plan.

The placement plan must include:

1. Crack treatment schedule including coefficient of friction testing
2. Methods and materials including:
    - 2.1. Description of equipment for applying HMWM
    - 2.2. Description of equipment for applying sand
    - 2.3. Gel time range and final cure time for resin

Revise rejected plans and resubmit. With each plan rejection, the Engineer gives revision directions including detailed comments in writing. The Engineer notifies you of a plan's acceptance or rejection within 2 weeks of receiving that plan.

41-3.01C(3) Reserved

41-3.01D Quality Control and Assurance

41-3.01D(1) General

Use test tiles to evaluate the HMWM cure time. Coat at least one 4 by 4 inch smooth glazed tile for each batch of HMWM. Place the coated tile adjacent to the area being treated. Do not apply sand to the test tiles.

Use the same type of crack treatment equipment for testing and production.

41-3.01D(2) Test Area

Before starting crack treatment, treat a test area of at least 500 square feet within the project limits at a location accepted by the Engineer. Use test areas outside the traveled way if available.

Treat the test area under weather and pavement conditions similar to those expected during crack treatment production.

The Engineer evaluates the test area based on the acceptance criteria. Do not begin crack treatment until the Engineer accepts the test area.

41-3.01D(3) Reserved

41-3.01D(4) Acceptance Criteria

The Engineer accepts a treated area if:

1. Corresponding test tiles are dry to the touch
2. Treated surface is tack-free and not oily
3. Sand cover adheres enough to resist hand brushing
4. Excess sand is removed
5. Coefficient of friction is at least 0.30 when tested under California Test 342

41-3.02 MATERIALS

HMWM consists of compatible resin, promoter, and initiator. HMWM resin may be prepromoted by mixing promoter and resin together before filling containers. Identify prepromoted resin on the container label.

Adjust the gel time to compensate for temperature changes throughout the application.

HMWM resin properties must have the following values:

Property	Test method	Value
Viscosity[a] (cP, max, Brookfield RVT with UL adapter, 50 RPM at 77 °F)	ASTM D2196	25
Specific gravity[a] (min, at 77 °F)	ASTM D1475	0.90
Flash point[a] (°F, min)	ASTM D3278	180
Vapor pressure[a] (mm Hg, max, at 77 °F)	ASTM D323	1.0
Tack-free time (minutes, max, at 77 °F)	Specimen prepared under California Test 551	400
Volatile content[a] (%, max)	ASTM D2369	30
PCC saturated surface-dry bond strength (psi, min, at 24 hours and 77 ± 2 °F)	California Test 551	500

[a]Perform the test before adding initiator.

Sand must be commercial quality dry blast sand. At least 95 percent of the sand must pass the no. 8 sieve and at least 95 percent must be retained on the no. 20 sieve when tested under California Test 202.

41-3.02D Reserved

41-3.03 CONSTRUCTION

41-3.03A General

Before applying HMWM, clean the pavement surface by abrasive blasting and blow loose material from visible cracks with high-pressure air. Remove concrete curing seals from the pavement to be treated. The pavement must be dry when blast cleaning is performed. If the pavement surface becomes contaminated before applying the HMWM, clean the pavement surface by abrasive blasting.

If performing abrasive blasting within 10 feet of a lane occupied by traffic, operate abrasive blasting equipment with a concurrently operating vacuum attachment.

During pavement treatment, protect pavement joints, working cracks, and surfaces not being treated.

The equipment applying HMWM must combine the components by either static in-line mixers or by external intersecting spray fans. The pump pressure at the spray bars must not cause atomization. Do not use compressed air to produce the spray. Use a shroud to enclose the spray bar apparatus.

You may apply HMWM manually to prevent overspray onto adjacent traffic. If applying resin manually, limit the batch quantity of HMWM to 5 gallons.

Apply HMWM at a rate of 90 square feet per gallon. The prepared area must be dry and the surface temperature must be from 50 to 100 degrees F while applying HMWM. Do not apply HMWM if the ambient relative humidity is more than 90 percent.

Protect existing facilities from HMWM. Repair or replace existing facilities contaminated with HMWM at your expense.

Flood the treatment area with HMWM to penetrate the pavement and cracks. Apply HMWM within 5 minutes after complete mixing. Mixed HMWM viscosity must not increase. Redistribute excess material with squeegees or brooms within 10 minutes of application. Remove excess material from tined grooves.

Wait at least 20 minutes after applying HMWM before applying sand. Apply sand at a rate of approximately 2 pounds per square yard or until refusal. Remove excess sand by vacuuming or sweeping.

Do not allow traffic on the treated surface until:

1. Treated surface is tack-free and non-oily
2. Sand cover adheres enough to resist hand brushing
3. Excess sand is removed
4. Coefficient of friction is at least 0.30 determined under California Test 342

41-3.04 PAYMENT

Not Used

41-4 SPALL REPAIR

41-4.01 GENERAL

Section 41-4 includes specifications for repairing spalls in concrete pavement.

41-4.02 MATERIALS

Repair spalls using polyester concrete with a bonding agent. The bonding agent must comply with the requirements for HMWM in section 41-3.02 except tack-free time requirements do not apply and the HMWM must not contain wax.

Form board must be corrugated cardboard with a 6-mil polyethylene covering.

41-4.03 CONSTRUCTION

41-4.03A General

Prepare spall areas by removing concrete and cleaning. Use a form board to provide compression relief at joints and cracks.

After completing spall repairs do not allow traffic on the repairs for at least 2 hours after the time of final setting under ASTM C403/403M.

41-4.03B Remove Pavement

The Engineer determines the rectangular limits of unsound concrete pavement. Before removing pavement, mark the saw cut lines and spall repair area on the pavement surface.

Do not remove pavement until the Engineer verbally authorizes the saw cut area.

Use a power-driven saw with a diamond blade.

Remove pavement as shown and:

1. From the center of the repair area towards the saw cut
2. To the full saw cut depth
3. At least 2 inches beyond the saw cut edge to produce a rough angled surface

Produce a rough surface by chipping or other removal methods that do not damage the pavement remaining in-place. Completely remove any saw overcuts. Pneumatic hammers used for concrete removal must weigh 15 lbs or less.

If you damage concrete pavement outside the removal area, enlarge the area to remove the damaged pavement.

If dowel bars are exposed during removal, remove concrete from the exposed surface and cover with duct tape.

41-4.03C Cleaning

After pavement has been removed, clean the exposed faces of the concrete by:

1. Sand or water blasting. Water blasting equipment must be capable of producing a blast pressure of 3,000 to 6,000 psi.

2. Blowing the exposed concrete area with compressed air free of moisture and oil to remove debris after blasting. Air compressors must deliver air at a minimum of 120 cfm and develop 90 psi of nozzle pressure.

41-4.03D Form Board Installation

After cleaning, place the form board to match the existing joint or crack alignment. Extend the form board at least 3 inches beyond each end of the repair and at least 1 inch deeper than the repair. Remove the form board before sealing joints or cracks.

41-4.03E–41-4.03I Reserved

41-4.04 PAYMENT

Payment is calculated based on the authorized saw cut area.

The Department does not adjust the unit price for an increase or decrease in the spall repair quantity.

41-5 JOINT SEALS

41-5.01 GENERAL

41-5.01A Summary

Section 41-5 includes specifications for sealing concrete pavement joints or replacing existing concrete pavement joint seals. Pavement joints include isolation joints.

41-5.01B Definitions

Reserved

41-5.01C Submittals

At least 15 days before delivery to the job site, submit a certificate of compliance, MSDS, manufacturer's recommendations, and instructions for storage and installation of:

1. Liquid joint sealant.
2. Backer rods. Include the manufacturer data sheet verifying compatibility with the liquid joint sealant.
3. Preformed compression joint seal. Include the manufacturer data sheet used to verify the seal for the joint dimensions shown.
4. Lubricant adhesive.

Asphalt rubber joint sealant containers must comply with ASTM D6690. Upon delivery of asphalt rubber joint sealant to the job site, submit a certified test report for each lot based on testing performed within 12 months.

Submit a work plan for removing pavement and joint materials. Allow 10 days for authorization. Include descriptions of the equipment and methods for removal of existing pavement and joint material.

41-5.01D Quality Control and Assurance

41-5.01D(1) General

Before sealing joints, arrange for a representative from the manufacturer to provide training on cleaning and preparing the joint and installing the liquid joint sealant or preformed compression joint seal. Do not seal joints until your personnel and the Department's personnel have been trained.

The Engineer accepts joint seals based on constructed dimensions and visual inspection of completed seals for voids.

41-5.01D(2) Reserved

41-5.02 MATERIALS

41-5.02A General

Use the type of seal material described.

Silicone or asphalt rubber joint sealant must not bond or react with the backer rod.

41-5.02B Silicone Joint Sealant

Silicone joint sealant must be on the Authorized Material List.

41-5.02C Asphalt Rubber Joint Sealant

Asphalt rubber joint sealant must:

1. Be paving asphalt mixed with not less than 10 percent ground rubber by weight. Ground rubber must be vulcanized or a combination of vulcanized and devulcanized materials that pass a no. 8 sieve.
2. Comply with ASTM D6690 for Type II.
3. Be capable of melting at a temperature below 400 degrees F and applied to cracks and joints.

41-5.02D Backer Rods

Backer rods must:

1. Comply with ASTM D5249:
   1.1. Type 1 for asphalt rubber joint sealant
   1.2. Type 1 or Type 3 for silicone joint sealant
2. Be expanded, closed-cell polyethylene foam
3. Have a diameter at least 25 percent greater than the saw cut joint width

41-5.02E Preformed Compression Joint Seals

Preformed compression joint seals must:

1. Comply with ASTM D2628
2. Have 5 or 6 cells, except seals 1/2 inch wide or less may have 4 cells

Lubricant adhesive used to install seals must comply with ASTM D2835.

41-5.02F–41-5.02K Reserved

41-5.03 CONSTRUCTION

41-5.03A General

If joint sealing is described for new concrete pavement, do not start joint sealing activities until the pavement has been in place for at least 7 days. Seal new concrete pavement joints at least 7 days after concrete pavement placement if shown.

Remove existing pavement and joint material by sawing, rectangular plowing, cutting, or manual labor. Saw cut the reservoir before cleaning the joint. Use a power-driven saw with a diamond blade.

If you damage a portion of the pavement to remain in place, repair the pavement under section 41-4.

41-5.03B Joint Cleaning

41-5.03B(1) General

Clean the joint after removal and any repair is complete before installing joint seal material. Cleaning must be completed no more than 4 hours before installing backer rods, liquid joint seal, or preformed compression seals using the following sequence:

1. Removing debris
2. Drying
3. Sandblasting
4. Air blasting
5. Vacuuming

Clean in 1 direction to minimize contamination of surrounding areas.

41-5.03B(2) Removing Debris

Remove debris including dust, dirt, and visible traces of old sealant from the joint after sawing, plowing, cutting, or manual removal. Do not use chemical solvents to wash the joint.

41-5.03B(3) Drying

After removing debris, allow the reservoir surfaces to dry or remove moisture and dampness at the joint with compressed air that may be moderately hot.

41-5.03B(4) Sandblasting

After the joint is dry, sandblast the reservoir to remove remaining residue using a 1/4-inch diameter nozzle and 90 psi minimum pressure. Do not sandblast straight into the reservoir. Angle the sandblasting nozzle within 1 to 2 inches from the concrete and make at least 1 pass to clean each reservoir face.

41-5.03B(5) Air Blasting

After sandblasting, air blast the reservoir to remove sand, dirt, and dust 1 hour before sealing the joint. Use compressed air free of oil and moisture delivered at a minimum rate of 120 cfm and 90 psi nozzle pressure.

41-5.03B(6) Vacuuming

After air blasting, use a vacuum sweeper to remove debris and contaminants from the pavement surfaces surrounding the joint.

41-5.03B(7) Reserved

41-5.03C Installing Liquid Joint Sealant

Where backer rods are shown, place the rods before installing liquid joint sealant. Place backer rods under the manufacturer’s instructions unless otherwise specified. The pavement and reservoir surfaces must be dry and the ambient air temperature must be at least 40 degrees F and above the dew point. The reservoir surface must be free of residue or film. Do not puncture the backer rod.

Immediately after placing the backer rod, install liquid joint sealant under the manufacturer’s instructions unless otherwise specified. Before installing, demonstrate that fresh liquid sealant is ejected from the nozzle free of cooled or cured material. For asphalt rubber joint sealant, the pavement surface temperature must be at least 50 degrees F before installing.

Pump liquid joint sealant through a nozzle sized for the width of the reservoir so that liquid joint sealant is placed directly onto the backer rod. The installer must draw the nozzle toward his body and extrude liquid joint sealant evenly. Liquid joint sealant must maintain continuous contact with the reservoir walls during extrusion.

After placing liquid joint sealant, recess it to the depth shown within 10 minutes of installation and before a skin begins to form.

After each joint is sealed, remove excess liquid joint sealant on the pavement surface. Do not allow traffic over the sealed joints until the liquid joint sealant is set, tack free, and firm enough to prevent embedment of roadway debris.

41-5.03D Installing Preformed Compression Joint Seals

Install preformed compression joint seals using lubricant adhesive as shown and under the manufacturer's instructions.

Install longitudinal seals before transverse seals. Longitudinal seals must be continuous except splicing is allowed at intersections with transverse seals. Transverse seals must be continuous for the entire transverse length of concrete pavement except splices are allowed for widening and staged construction. With a sharp instrument, cut across the longitudinal seal at the intersection with transverse construction joints. If the longitudinal seal does not relax enough to properly install the transverse seal, trim the longitudinal seal to form a tight seal between the 2 joints.

If splicing is authorized, comply with the manufacturer's instructions.

Use a machine specifically designed for preformed compression joint seal installation. The machine must install the seal:

1. To the specified depth
2. To make continuous contact with the joint walls
3. Without cutting, nicking, or twisting the seal
4. Without stretching the seal more than 4 percent

Cut preformed compression joint seal material to the exact length of the pavement joint to be sealed. The Engineer measures this length. After you install the preformed compression joint seal, the Engineer

measures the excess length of material at the joint end. The Engineer divides the excess length by the measured cut length to determine the stretch percentage.

Seals must be compressed from 30 to 50 percent of the joint width when complete in place.

41-5.03E Reserved

41-5.04 PAYMENT

Not Used

41-6 CRACK AND SEAT

41-6.01 GENERAL

41-6.01A Summary

Section 41-6 includes specifications for cracking, seating, and preparing the surface of existing concrete pavement.

41-6.01B Definitions

Reserved

41-6.01C Submittals

Submit each core in a plastic bag or tube for acceptance at the time of sampling. Mark each core with a location description.

41-6.01D Quality Control and Assurance

41-6.01D(1) General

If cracking is noncompliant:

1. Stop crack and seat work
2. Modify your equipment and procedures and crack the noncompliant pavement again
3. Construct another test section
4. Take additional core samples to verify compliance
5. Construct an inspection strip if the concrete pavement has HMA on the surface

41-6.01D(2) Test Section

The Engineer determines and marks a test section up to 1000 square feet within the crack and seat area shown. Construct the test section and obtain the Engineer's verbal authorization before starting crack and seat work.

Immediately before cracking the test section, apply water to the pavement surface so that cracking can be readily evaluated. Crack the test section and vary impact energy and striking patterns to verify your procedure.

41-6.01D(3) Coring

Drill cores at least 6 inches in diameter under ASTM C42 to verify cracking in the Engineer’s presence. Take at least 2 cores per test section and 1 core per lane mile for each pavement cracking machine used. The Engineer determines the core locations.

41-6.01D(4) Reserved

41-6.02 MATERIALS

41-6.02A General

Use fast-setting or polyester concrete to fill core holes.

41-6.03 CONSTRUCTION

41-6.03A Cracking

Crack existing concrete pavement using the procedures and equipment from the authorized test section.

Do not allow flying debris during cracking operations.

Crack existing concrete pavement into segments that nominally measure 6 feet transversely by 4 feet longitudinally. If the existing pavement is already cracked into segments, crack it into equal-sized square

or rectangular pieces that nominally measure not more than 6 feet transversely and from 3 to 5 feet longitudinally. Do not impact the pavement within 1 foot of another break line, pavement joint, or edge of pavement.

Cracks must be vertical, continuous, and penetrate the full depth of pavement. Cracks must be within 6 inches of vertical along the full depth of pavement. Do not cause surface spalling over 0.10-foot deep or excessive shattering of the pavement or base.

Cracking equipment must impact the pavement with a variable force in a controlled location. Do not use unguided free-falling weights such as "headache balls."

If the concrete pavement has no more than 0.10 foot of asphalt concrete on the surface, you may crack the pavement without removing the asphalt concrete. After cracking, construct an inspection strip by removing at least 500 square feet of asphalt concrete at a location determined by the Engineer. Construct additional inspection strips to demonstrate compliance where ordered by the Engineer.

After cracking, allow public traffic on the cracked or initial pavement layer for no more than 15 days.

41-6.03B Seating

Seat cracked concrete by making at least 5 passes over the cracked concrete with either:

04-18-14

1. Oscillating type pneumatic-tired roller at least 4 feet wide. Pneumatic tires must be of equal size, diameter, type, and ply. The tires must be inflated to 60 psi minimum and maintained so that the air pressure does not vary more than 5 psi. The roller's gross static weight must be at least 15 tons.

07-19-13

2. Vibratory pad-foot roller exerting a dynamic centrifugal force of at least 10 tons

A pass is 1 movement of a roller in either direction at 5 mph or less.

After all segments have been seated, clean loose debris from joints and cracks using compressed air free of moisture and oil.

Reseat any segment of cracked pavement that has not been overlaid within 24 hours of seating.

41-6.03C Surface Preparation

Before opening cracked and seated pavement to traffic or overlaying:

04-18-14

1. Fill joints, cracks, and spalls wider than 3/4 inch and deeper than 1 inch by applying tack coat and placing minor HMA under section 39. Use the no. 4 gradation.

07-19-13

2. Remove all loose debris and sweep the pavement.

41-6.03D Reserved

41-6.04 PAYMENT

Crack and seat existing concrete pavement is measured from the area of pavement cracked and seated. No deduction is made for existing cracked segments. The Department does not pay for HMA used to fill joints, cracks, and spalls.

41-7 TRANSITION TAPER

41-7.01 GENERAL

Section 41-7 includes specifications for constructing transition tapers in existing pavement.

41-7.02 MATERIALS

Not Used

41-7.03 CONSTRUCTION

Construct transition tapers by either grinding or removing and replacing the existing concrete. Do not allow flying debris during the construction of tapers.

Grinding must comply with section 42.

Replacement concrete must comply with section 41-9 except place concrete to the taper level shown and finish the surface with a coarse broom.

04-18-14

If the transition taper will be overlaid with HMA that is not placed before opening to traffic and there is a grade difference of more than 0.04 foot, construct a temporary taper by placing minor HMA that complies with section 39. Remove the temporary HMA taper before constructing the transition taper.

07-19-13

41-7.04 PAYMENT

Pavement transition tapers are measured using the dimensions shown. The Department does not pay for temporary HMA tapers.

41-8 DOWEL BAR RETROFIT

Reserved

41-9 INDIVIDUAL SLAB REPLACEMENT WITH RAPID STRENGTH CONCRETE

41-9.01 GENERAL

41-9.01A Summary

Section 41-9 includes specifications for removing existing concrete pavement and constructing individual slab replacement with rapid strength concrete (ISR—RSC).

41-9.01B Definitions

concrete raveling: Disintegration of the concrete surface layer from aggregate loss.

early age: Any age less than 10 times the time of final setting for concrete determined under ASTM C403/C403M.

full-depth crack: Crack that runs from one edge of the concrete slab to the opposite or adjacent side of the slab.

opening age: Age when the minimum modulus of rupture specified for opening to traffic and equipment is attained.

time of final setting: Elapsed time required to develop a concrete penetration resistance that is at least 4,000 psi under ASTM C403/C403M.

41-9.01C Submittals

41-9.01C(1) General

At least 15 days before delivery to the job site, submit manufacturer's recommendations, MSDS and instructions for storage and installation of joint filler material.

At least 45 days before starting ISR—RSC work submit a sample of cement from each proposed lot and samples of proposed admixtures in the quantities ordered by the Engineer.

During ISR—RSC placement operations, submit uniformity reports for hydraulic cement at least once every 30 days to the Engineer and METS, attention Cement Laboratory. Uniformity reports must comply with ASTM C917 except testing age and water content may be modified to suit the particular material.

Except for modulus of rupture tests, submit QC test result forms within 48 hours of the paving shift. Submit modulus of rupture results within:

1. 15 minutes of opening age test completion
2. 24 hours of 3-day test completion

41-9.01C(2) Quality Control Plan

If the quantity of ISR—RSC is at least 300 cu yd, submit a QC plan at least 20 days before placing trial slabs. If the quantity of ISR—RSC is less than 300 cu yd, submit proposed forms for RSC inspection, sampling, and testing.

41-9.01C(3) Mix Design

At least 10 days before use in a trial slab, submit a mix design. The maximum ambient temperature range for a mix design is 18 degrees F. Submit more than 1 mix design based on ambient temperature variations anticipated during RSC placement. Each mix design must include:

1. Mix design identification number
2. Aggregate source
3. Opening age
4. Aggregate gradation
5. Types of cement and chemical admixtures
6. Mix proportions
7. Maximum time allowed between batching and placing
8. Range of effective ambient temperatures
9. Time of final setting
10. Modulus of rupture development data from laboratory-prepared samples, including tests at:
    - 10.1. 1 hour before opening age
    - 10.2. Opening age
    - 10.3. 1 hour after opening age
    - 10.4. 1 day
    - 10.5. 3 days
    - 10.6. 7 days
    - 10.7. 28 days
11. Shrinkage test data
12. Any special instructions or conditions such as water temperature requirements

41-9.01C(4) Reserved

41-9.01D Quality Control and Assurance

41-9.01D(1) General

Designate a QC manager and assistant QC managers to administer the QC plan. The QC managers must hold current American Concrete Institute (ACI) certification as a Concrete Field Testing Technician-Grade I and a Concrete Laboratory Testing Technician-Grade II, except the assistant QC managers may hold Concrete Laboratory Testing Technician-Grade I instead of Grade II.

The QC manager responsible for the production period involved must review and sign the sampling, inspection, and test reports before submitting them. The QC manager must be present for:

1. Each stage of mix design
2. Trial slab construction
3. Production and construction of RSC
4. Meetings with the Engineer relating to production, placement, or testing

The QC manager must not be a member of this project's production or paving crews, an inspector, or a tester. The QC manager must have no duties during the production and placement of RSC except those specified.

Testing laboratories and equipment must comply with the Department's Independent Assurance Program. At the time of the QC plan submittal, the Department evaluates the quality control samplers and testers.

41-9.01D(2) Just-in-time Training

Reserved

41-9.01D(3) Quality Control Plan

Establish, implement, and maintain a QC plan for pavement The QC plan must describe the organization and procedures used to:

1. Control the production process
2. Determine if a change to the production process is needed
3. Implement a change

The QC plan must include:

1. Names, qualifications, and certifications of QC personnel, including:
    1.1. QC manager
    1.2. Assistant QC managers
    1.3. Samplers and testers
2. Outline of procedure for the production, transportation, placement, and finishing of RSC
3. Outline of procedure and forms for concrete QC, sampling, and testing to be performed during and after RSC construction, including testing frequencies for modulus of rupture
4. Contingency plan for identifying and correcting problems in production, transportation, placement, or finishing RSC including:
    4.1. Action limits
    4.2. Suspension limits that do not exceed specified material requirements
    4.3. Detailed corrective action if limits are exceeded
    4.4. Temporary pavement structure provisions, including:
        4.4.1. The quantity and location of standby material
        4.4.2. Determination of need
5. Location of your quality control testing laboratory and testing equipment during and after paving operations
6. List of the testing equipment to be used, including the date of last calibration
7. Production target values for material properties that impact concrete quality or strength including cleanness value and sand equivalent
8. Outline procedure for placing and testing trial slabs, including:
    8.1. Locations and times
    8.2. Production procedures
    8.3. Placing and finishing methods
    8.4. Sampling methods, sample curing, and sample transportation
    8.5. Testing and test result reporting
9. Name of source plant with approved Material Plant Quality Program (MPQP)
10. Procedures or methods for controlling pavement quality including:
    10.1. Materials quality
    10.2. Contraction and construction joints
    10.3. Protecting pavement before opening to traffic

41-9.01D(4) Prepaving Conference

Schedule a prepaving conference and provide a facility to meet with the Engineer.

Prepaving conference attendees must sign an attendance sheet provided by the Engineer. The prepaving conference must be attended by your:

1. Project superintendent
2. Project manager
3. QC manager
4. Workers and your subcontractor's workers, including:
    4.1. Foremen
    4.2. Concrete plant manager
    4.3. Concrete plant operator
    4.4. Concrete plant inspectors
    4.5. Personnel performing saw cutting and joint sealing
    4.6. Paving machine operators
    4.7. Inspectors
    4.8. Samplers
    4.9. Testers

The purpose of the prepaving conference is to familiarize personnel with the project's specifications. Discuss the QC plan and processes for constructing each item of work, including:

1. Production
2. Transportation
3. Trial slabs
4. Pavement structure removal
5. Placement

6. Contingency plan
7. Sampling
8. Testing
9. Acceptance

Do not start trial slabs or paving activities until the listed personnel have attended the prepaving conference.

41-9.01D(5) Trial Slabs

Before starting individual slab replacement work, complete 1 trial slab for each mix design.

Place trial slabs near the job site at a mutually-agreed location that is neither on the roadway nor within the project limits. Trial slabs must be 10 by 20 feet and at least 10 inches thick.

During trial slab construction, sample and split the aggregate for grading, cleanness value, and sand equivalent testing.

Fabricate and test beams under California Test 524 to determine the modulus of rupture values.

Cure beams fabricated for early age testing such that the monitored temperatures in the beams and the slab are always within 5 degrees F of each other.

Monitor and record the internal temperatures of trial slabs and early age beams at intervals of at least 5 minutes. Install thermocouples or thermistors connected to strip-chart recorders or digital data loggers to monitor the temperatures. Temperature recording devices must be accurate to within 2 degrees F. Measure internal temperatures at 1 inch from the top, 1 inch from the bottom, and no closer than 3 inches from any edge until early age testing is completed.

Cure beams fabricated for 3-day testing under California Test 524 except place them into sand at a time that is from 5 to 10 times the time of final setting measured under ASTM C403/403M or 24 hours, whichever is earlier.

Trial slabs must have an opening age modulus of rupture of not less than 400 psi and a 3-day modulus of rupture of not less than 600 psi.

After authorization, remove and dispose of trial slabs and testing materials.

41-9.01D(6) Quality Control Testing

41-9.01D(6)(a) General

Provide continuous process control and quality control sampling and testing throughout RSC production and placement. Notify the Engineer at least 2 business days notice before any sampling and testing. Establish a testing facility at the job site or at an authorized location.

Sample under California Test 125.

During ISR—RSC placement, sample and fabricate beams for modulus of rupture testing within the first 30 cubic yards, at least once every 130 cu yd, and within the final truckload. Submit split samples and fabricate test beams for the Department’s testing unless the Engineer informs you otherwise.

Determine the modulus of rupture at opening age under California Test 524, except beam specimens may be fabricated using an internal vibrator under ASTM C 31. Cure beams under the same conditions as the pavement until 1 hour before testing. Test 3 beam specimens in the presence of the Engineer and average the results. A single test represents no more than that day's production or 130 cu yd, whichever is less.

Determine the modulus of rupture at other ages using beams cured and tested under California Test 524 except place them in sand from 5 to 10 times the time of final setting under ASTM C403/C403M or 24 hours, whichever is earlier.

41-9.01D(6)(b) Rapid Strength Concrete

Your quality control must include testing RSC for the properties at the frequencies shown in the following table:

RSC Minimum Quality Control

Property	Test method	Minimum testing frequency[a]
Cleanness value	California Test 227	650 cu yd or 1 per shift
Sand equivalent	California Test 217	650 cu yd or 1 per shift
Aggregate gradation	California Test 202	650 cu yd or 1 per shift
Air content	California Test 504	130 cu yd or 2 per shift
Yield	California Test 518	2 per shift
Slump or penetration	ASTM C143 or California Test 533	1 per 2 hours of paving
Unit weight	California Test 518	650 cubic yards or 2 per shift
Aggregate Moisture Meter Calibration[b]	California Test 223 or California Test 226	1 per shift
Modulus of rupture	California Test 524	Comply with section 41-9.01D(6)(a)

[a]Test at the most frequent interval.
[b]Check calibration of the plant moisture meter by comparing moisture meter readings with California Test 223 or California Test 226 test results

Maintain control charts to identify potential problems and causes. Post a copy of each control chart at a location determined by the Engineer.

Individual measurement control charts must use the target values in the mix proportions as indicators of central tendency.

Develop linear control charts for:

1. Cleanness value
2. Sand equivalent
3. Fine and coarse aggregate gradation
4. Air content
5. Penetration

Control charts must include:

1. Contract number
2. Mix proportions
3. Test number
4. Each test parameter
5. Action and suspension limits
6. Specification limits
7. Quality control test results

For fine and coarse aggregate gradation control charts, record the running average of the previous 4 consecutive gradation tests for each sieve and superimpose the specification limits.

For air content control charts, the action limit is ±1.0 percent and the suspension limit is ±1.5 percent of the specified values. If no value is specified, apply the air content value used in the approved mix design.

As a minimum, a process is out of control if any of the following occurs:

1. For fine and coarse aggregate gradation, 2 consecutive running averages of 4 tests are outside the specification limits
2. For individual penetration or air content measurements:
   2.1. One point falls outside the suspension limit line
   2.2. Two points in a row fall outside the action limit line

Stop production and take corrective action for out of control processes or the Engineer rejects subsequent RSC.

Before each day's concrete pavement placement and at intervals not to exceed 4 hours of production, use a tachometer to test and record vibration frequency for concrete consolidation vibrators.

41-9.01D(6)(c) Reserved

41-9.01D(7) Acceptance Criteria

41-9.01D(7)(a) General

The final texture of ISR—RSC must pass visual inspection and have a coefficient of friction of at least 0.30 determined under California Test 342.

Allow at least 25 days for the Department to schedule testing for coefficient of friction. Notify the Engineer when the pavement is scheduled to be opened to traffic.

41-9.01D(7)(b) Modulus of Rupture

ISR—RSC is accepted based on your testing for modulus of rupture at opening age and the Department's testing for modulus of rupture at 3 days.

ISR—RSC must have a modulus of rupture at opening age that is at least 400 psi and a modulus of rupture at 3 days that is at least 600 psi.

Calculate the test result as the average from testing 3 beams for each sample. The test result represents 1 paving shift or 130 cu yd, whichever is less.

41-9.01D(7)(c) Concrete Pavement Smoothness

The Department tests for concrete pavement smoothness using a 12-foot straightedge. Straightedge smoothness specifications do not apply to the pavement surface placed within 12 inches of existing concrete pavement except parallel to the centerline at the midpoint of a transverse construction joint.

The concrete pavement surface must not vary from the lower edge of a 12-foot straightedge by more than:

1. 0.01 feet when parallel to the centerline
2. 0.02 feet when perpendicular to the centerline extending from edge to edge of a traffic lane

41-9.01D(7)(d) Cracking and Raveling

The Engineer rejects an ISR—RSC slab under section 6-3.06 if within 1 year of contract acceptance there is either:

1. Partial or full-depth cracking
2. Concrete raveling consisting of either:
   - 2.1. Combined raveled areas more than 5 percent of each ISR—RSC slab area
   - 2.2. Any single raveled area of more than 4 sq ft

41-9.01D(8) Reserved

41-9.02 MATERIALS

41-9.02A General

Reserved

41-9.02B Rapid Strength Concrete

RSC for ISR—RSC must comply with section 90-3.

Use either the 1-1/2 inch maximum or the 1-inch maximum combined grading specified in section 90-1.02C(4)(d).

Air content must comply with the minimum requirements in section 40-1.02B(4).

41-9.02C Base Bond Breaker

Use base bond breaker no. 3, 4, or 5 under section 36-2.

41-9.02D Reserved

41-9.03 CONSTRUCTION

41-9.03A General

Complete ISR—RSC adjacent to new pavement or existing pavement shown for construction as a 1st order of work. Replace individual slabs damaged during construction before placing final pavement delineation.

41-9.03B Removing Existing Pavement

Remove pavement under section 15-2.02. The Engineer determines the exact ISR—RSC limits after overlying layers are removed.

After removing pavement to the depth shown, grade to a uniform plane. Water as needed and compact the material remaining in place to a firm and stable base. The finished surface of the remaining material must not extend above the grade established by the Engineer.

41-9.03C Drill and Bond Dowel Bars

Drill existing concrete and bond dowel bars under section 41-10 if described. Do not install dowel bars in contraction joints.

41-9.03D Base Bond Breaker

Place base bond breaker before placing ISR—RSC. Comply with section 36-2.

41-9.03E Placing Rapid Strength Concrete

Do not place RSC if the ambient air temperature is forecast by the National Weather Service to be less than 40 degrees F within 72 hours of final finishing.

Before placing RSC against existing concrete, place 1/4-inch thick commercial quality polyethylene flexible foam expansion joint filler across the original transverse and longitudinal joint faces and extend the full depth of pavement to the top of the base layer. Place the top of the joint filler flush with the top of the pavement. Secure joint filler to the joint face of the existing pavement to prevent the joint filler from moving during the placement of RSC.

Use metal or wood side forms. Wood side forms must not be less than 1-1/2 inches thick. Side forms and connections must be of sufficient rigidity that movement will not occur under forces from equipment or RSC. Clean and oil side forms before each use. Side forms must remain in place until the pavement edge no longer requires the protection of forms.

After you place RSC, consolidate it using high-frequency internal vibrators adjacent to forms and across the full paving width. Place RSC as nearly as possible to its final position. Do not use vibrators for extensive shifting of concrete pavement.

Spread and shape RSC with powered finishing machines supplemented by hand finishing. After you mix and place RSC, do not add water to the surface to facilitate finishing. You may request authorization to use surface finishing additives. Submit the manufacturer's instructions with your request.

Place consecutive concrete loads without interruption. Do not allow cold joints where a visible lineation forms after concrete is placed, sets, and hardens before additional concrete placed.

Where the existing transverse joint spacing in an adjacent lane exceeds 15 feet, construct an additional transverse contraction joint midway between the existing joints. Complete sawing of contraction joints within 2 hours of completion of final finishing.

Cut contraction joints a minimum of 1/3 the slab depth.

41-9.03F Final Finishing

After preliminary finishing, round the edges of the initial paving width to a 0.04-foot radius. Round transverse and longitudinal construction joints to a 0.02-foot radius. Mark each ISR—RSC area with a stamp. The stamp mark must show the month, day, and year of placement and contract number. Level the location of the stamp with a steel trowel below the pavement texture. Orient the stamp mark so it can be read from the outside edge of ISR—RSC.

Before curing, texture the pavement. Perform initial texturing with a burlap drag or broom device that produces striations parallel to the centerline. Perform final texturing with a steel-tined device that produces grooves parallel with the centerline.

Tines must be from 3/32 to 1/8 inch wide on 3/4-inch centers and have enough length, thickness, and resilience to form grooves from 1/8 to 3/16 inch deep after the concrete has hardened. Grooves must extend over the entire pavement width except do not construct grooves 3 inches from longitudinal pavement edges or joints.

Final texture must be uniform and smooth. Grooves must be parallel and aligned to the pavement edge across the pavement width. The groove alignment must not vary more than 0.1 foot for every 12 foot length.

Protect RSC under section 90-1.03C.

41-9.03G Temporary Pavement Structure

Temporary pavement structure must be RSC or 3-1/2 inch thick HMA over aggregate base.

41-9.03H Noncompliant Individual Slab Replacement

Replace an ISR—RSC slab with any of the following:

1. One or more full-depth cracks.
2. Concrete raveling.
3. Noncompliant smoothness except you may request authorization for grinding under section 42 and retesting. Grinding that causes a depression will not be considered. Smoothness must be corrected within 48 hours of placing ISR—RSC.
4. Noncompliant modulus of rupture.

If the modulus of rupture at opening age is at least 400 psi and the modulus of rupture at 3 days is at least 500 psi but less than 600 psi, you may request authorization to leave the ISR—RSC in place and accept the specified deduction.

If pavement is noncompliant for coefficient of friction, groove or grind the pavement under section 42. Comply with section 40-1.03Q(4) and groove or grind before the installation of any required joint seal or edge drains adjacent to the areas to the noncompliant area.

If an ISR—RSC slab has partial depth cracking, treat it with high-molecular-weight methacrylate under section 41-3.

41-9.03I Replace Pavement Delineation

Replace traffic stripes, pavement markings, and markers that are removed, obliterated, or damaged by ISR—RSC under sections 84 and 85.

41-9.03J Reserved

41-9.04 PAYMENT

Replace base is not included in the payment for individual slab replacement (RSC).

Drill and bond dowel bars are not included in payment for individual slab replacement (RSC).

For individual slab replacement (RSC) with a modulus of rupture at opening age that is at least 400 psi and a modulus of rupture at 3 days that is greater than or equal to 500 psi but less than 550 psi, the Department deducts 10 percent of the payment for individual slab replacement (RSC).

For individual slab replacement (RSC) with a modulus of rupture at opening age that is at least 400 psi and a modulus of rupture at 3 days that is greater than or equal to 550 psi but less than 600 psi, the Department deducts 5 percent of the payment for individual slab replacement (RSC).

41-10 DRILL AND BOND BARS

41-10.01 GENERAL

41-10.01A Summary

Section 41-10 includes specifications for drilling, installing, and bonding tie bars and dowel bars in concrete pavement.

41-10.01B Definitions

Reserved

41-10.01C Submittals

Submit a certificate of compliance for:

1. Tie bars
2. Dowel bars
3. Dowel bar lubricant
4. Chemical adhesive
5. Epoxy powder coating

At least 15 days before delivery to the job site, submit the manufacturer's recommendations and instructions for storage, handling, and use of chemical adhesive.

41-10.01D Quality Control and Assurance

41-10.01D(1) General

Drill and bond bar is accepted based on inspection before concrete placement.

41-10.01D(2) Reserved

41-10.02 MATERIALS

41-10.02A General

Dowel bar lubricant must comply with section 40-1.02D.

Chemical adhesive for drilling and bonding bars must be on the Authorized Material List. The Authorized Material List indicates the appropriate chemical adhesive system for concrete temperature and installation conditions.

Each chemical adhesive system container must clearly and permanently show the following:

1. Manufacturer's name
2. Model number of the system
3. Manufacture date
4. Batch number
5. Expiration date
6. Current International Conference of Building Officials Evaluation Report number
7. Directions for use
8. Storage requirement
9. Warnings or precautions required by state and federal laws and regulations

41-10.02B Reserved

41-10.03 CONSTRUCTION

41-10.03A General

Drill holes for bars. Clean drilled holes in compliance with the chemical adhesive manufacturer’s instructions. Holes must be dry at the time of placing the chemical adhesive and bars. Use a grout retention ring when drilling and bonding dowel bars. Immediately after inserting the bar into the chemical adhesive, support the bar to prevent movement until chemical adhesive has cured the minimum time recommended by the manufacturer.

Apply dowel bar lubricant to the entire exposed portion of the dowel bar.

If the Engineer rejects a bar installation: stop paving, drilling, and bonding activities. Adjust your procedures and obtain the Engineer's verbal authorization before resuming paving, drilling, and bonding.

Cut the rejected bar flush with the pavement joint surface and coat the exposed end of the bar with chemical adhesive. Offset the new hole 3 inches horizontally from the rejected hole's center.

41-10.03B Tie Bar Tolerance

Place tie bars within the tolerances shown in the following table:

Tie Bar Tolerances

Dimension	Tolerance
Horizontal skew (vertical skew: bar length)	1:6
Vertical skew (vertical skew: bar length)	1:6
Longitudinal translation (inch)	±1
Horizontal offset (embedment, inch)	±1
Height relative to the adjacent bar	±1
Vertical Depth (clearance from the pavement surface or bottom, inches, min)	3

41-10.03C Dowel Bar Tolerance

Place dowel bars within the tolerances specified in section 40-1.01D(7)(b)(v).

41-10.03D Reserved

41-10.04 PAYMENT

Not Used

41-11–41-15 RESERVED

^^

42 GROOVE AND GRIND CONCRETE

07-19-13

Replace the paragraph of section 42-1.01A with:

07-19-13

Section 42-1 includes general specifications for grooving and grinding concrete.

Replace the headings and paragraphs in section 42-3 with:

07-19-13

42-3.01 GENERAL

42-3.01A Summary

Section 42-3 includes specifications for grinding the surfaces of pavement, bridge decks, and approach slabs.

42-3.01B Definitions

Reserved

42-3.01C Submittals

Reserved

42-3.01D Quality Control and Assurance

Reserved

42-3.02 MATERIALS

Not Used

42-3.03 CONSTRUCTION

42-3.03A General

Grind surfaces in the longitudinal direction of the traveled way and grind the full lane width. Begin and end grinding at lines perpendicular to the roadway centerline.

Grinding must result in a parallel corduroy texture with grooves from 0.08 to 0.12 inch wide and from 55 to 60 grooves per foot of width. Grooves must be from 0.06 to 0.08 inch from the top of the ridge to the bottom of the groove.

Grind with abrasive grinding equipment using diamond cutting blades mounted on a self-propelled machine designed for grinding and texturing concrete pavements.

42-3.03B Pavement

Grind existing concrete pavement that is adjacent to an individual slab replacement. Grind the replaced individual slab and all the existing slabs immediately surrounding it. Grind after the individual slab is replaced.

Grind existing concrete pavement that is adjacent to new lanes of concrete pavement. Grind before paving.

After grinding, the existing pavement must comply with requirements for smoothness and coefficient of friction in section 40 except:

1. At the midpoint of a joint or crack, test smoothness with a straightedge. Both sides must have uniform texture.
2. Straightedge and inertial profiler requirements do not apply to areas abnormally depressed from subsidence or other localized causes. End smoothness testing 15 feet before and resume 15 feet after these areas.
3. Cross-slope must be uniform and have positive drainage across the traveled way and shoulder.

As an alternative to grinding existing concrete pavement, you may replace the existing pavement. The new concrete pavement must be the same thickness as the removed pavement. Replace existing pavement between longitudinal joints or pavement edges and transverse joints. Do not remove portions of slabs.

Replacement of existing concrete pavement must comply with requirements for individual slab replacement in section 41-9.

42-3.03C Bridge Decks, Approach Slabs, and Approach Pavement

Grind bridge decks, approach slabs, and approach pavement only if described.

The following ground areas must comply with the specifications for smoothness and concrete cover over reinforcing steel in section 51-1.01D(4):

1. Bridge decks
2. Approach slabs
3. Adjacent 50 feet of approach pavement

After grinding, the coefficient of friction must comply with section 51-1.01D(4).

42-3.04 PAYMENT

Grinding existing approach slabs and adjacent 50 feet of approach pavement is paid for as grind existing bridge deck.

The Department does not pay for grinding replacement concrete pavement or for additional grinding to comply with smoothness requirements.

Add to section 42:

07-19-13

42-4–42-9 RESERVED

^^^

DIVISION VI STRUCTURES

46 GROUND ANCHORS AND SOIL NAILS

07-19-13

Replace the 1st paragraph of section 46-1.01C(2) with:

04-19-13

Submit 5 copies of shop drawings to OSD, Documents Unit. Notify the Engineer of the submittal. Include in the notification the date and contents of the submittal. Allow 30 days for the Department's review. After review, submit from 6 to 12 copies, as requested, for authorization and use during construction.

Shop drawings and calculations must be sealed and signed by an engineer who is registered as a civil engineer in the State.

Replace the 3rd paragraph of section 46-1.01C(2) with:

01-18-13

Ground anchor shop drawings must include:

1. Details and specifications for the anchorage system and ground anchors.
2. Details for the transition between the corrugated plastic sheathing and the anchorage assembly.
3. If shims are used during lock-off, shim thickness and supporting calculations.
4. Calculations for determining the bonded length. Do not rely on any capacity from the grout-to-ground bond within the unbonded length.

01-18-13

Delete the 5th and 6th paragraphs of section 46-1.01C(2).

Replace the 4th paragraph of section 46-1.01D(2)(b) with:

01-18-13

Each jack and its gage must be calibrated as a unit under the specifications for jacks used to tension prestressing steel permanently anchored at 25 percent or more of its specified minimum ultimate tensile strength in section 50-1.01D(3).

Replace the 3rd paragraph of section 46-1.01D(2)(d) with:

07-19-13

The Department may verify the test loads using the Department's load cells. If requested, install and support the Department's testing equipment during testing and remove the equipment after testing is complete.

Add to section 46-1.02:

07-19-13

46-1.02C Grout

Grout must consist of cement and water and may contain an admixture if authorized. Cement must comply with section 90-1.02B(2). Water must comply with section 90-1.02D. Admixtures must comply with section 90, except they must not contain chloride ions in excess of 0.25 percent by weight. Do not exceed 5 gallons of water per 94 lb of cement.

Mix the grout as follows:

1. Add water to the mixer followed by cement and any admixtures or fine aggregate.
2. Mix the grout with mechanical mixing equipment that produces a uniform and thoroughly mixed grout.
3. Agitate the grout continuously until the grout is pumped.
4. Do not add water after the initial mixing.

Add to section 46-1.03B:

04-20-12

Dispose of drill cuttings under section 19-2.03B.

Add to the end of section 46-1.03C:

07-19-13

Grouting equipment must be:

1. Capable of grouting at a pressure of at least 100 psi
2. Equipped with a pressure gage having a full-scale reading of not more than 300 psi

07-19-13

Delete the 3rd paragraph of section 46-2.01A.

Add to the beginning of section 46-2.01C:

07-19-13

Submittals for strand tendons, bar tendons, bar couplers, and anchorage assemblies must comply with section 50-1.01C.

Add to section 46-2.01D:

07-19-13

46-2.01D(3) Steel

Strand tendons, bar tendons, bar couplers, and anchorage assemblies must comply with section 50-1.01D.

46-2.01D(4) Grout

The Department tests the efflux time of the grout under California Test 541.

Add to the beginning of section 46-2.02B:

07-19-13

Strand tendons, bar tendons, and bar couplers must comply with section 50-1.02B.

Replace the 1st paragraph of section 46-2.02E with:

07-19-13

The efflux time of the grout immediately after mixing must be at least 11 seconds.

Add between the 13th and 14th paragraphs of section 46-2.03A:

07-19-13

If hot weather conditions will contribute to quick stiffening of the grout, cool the grout by authorized methods as necessary to prevent blockages during pumping activities.

Add between the 1st and 2nd paragraphs of section 46-2.03D:

07-19-13

Secure the ends of strand tendons with a permanent type anchorage system that:

1. Holds the prestressing steel at a force producing a stress of at least 95 percent of the specified ultimate tensile strength of the steel
2. Permanently secures the ends of the prestressing steel

Replace the 2nd sentence of the 1st paragraph of section 46-3.02A with:

07-19-13

The epoxy-coated prefabricated reinforcing bar must comply with section 52-2.03, except the epoxy thickness must be from 10 to 12 mils.

Replace the 2nd paragraph of section 46-3.02B with:

07-19-13

Concrete anchors on bearing plates must comply with the specifications for studs in clause 7 of AWS D1.1.

07-19-13

Delete the 1st paragraph of section 46-3.02E.

^^

47 EARTH RETAINING SYSTEMS

07-18-14

Replace the 2nd paragraph of section 47-2.01D with:

02-17-12

Coupler test samples must comply with minimum tensile specifications for steel wire in ASTM A 82/A 82M. Total wire slip must be at most 3/16 inch when tested under the specifications for tension testing of round wire test samples in ASTM A 370.

Replace "78-80" in the 1st table in the 2nd paragraph of section 47-2.02C with:

10-19-12

78-100

Replace the value for the sand equivalent requirement in the 2nd table in the 3rd paragraph of section 47-2.02C with:

01-20-12

12 minimum

Replace the 1st paragraph of section 47-2.02E with:

07-18-14

Steel wire must comply with the specifications for plain wire reinforcement in ASTM A1064/A1064M. Welded wire reinforcement must comply with the specifications for plain wire welded wire reinforcement in ASTM A1064/A1064M.

Hooks and bends must comply with the *Building Code Requirements for Structural Concrete* published by ACI.

Replace section 47-3 with:

07-19-13

47-3 REINFORCED CONCRETE CRIB WALLS

47-3.01 General

Section 47-3 includes specifications for constructing reinforced concrete crib walls.

Reinforced concrete crib walls must comply with section 51.

Reinforcement must comply with section 52.

Concrete crib walls consist of a series of rectangular cells composed of interlocking, precast, reinforced concrete headers, stretchers, and blocks.

47-3.02 Materials

47-3.02A General

Pads shown to be placed between bearing surfaces must either be (1) neoprene complying with the specifications for strip waterstops in section 51-2.05 or (2) commercial quality no. 30 asphalt felt. The protective board is not required for neoprene pads.

47-3.02B Crib Members

47-3.02B(1) General

All members may be manufactured to dimensions 1/8 inch greater in thickness than shown. The thickness of the lowest step must not be less than the dimension shown.

Stretchers may be manufactured 1/2 inch less in length than shown.

When an opening is shown in the face of the wall, special length stretchers and additional headers may be necessary.

For non-tangent wall alignments, special length stretchers may be required.

For non-tangent wall alignments and at locations where filler blocks are required, special length front face closure members may be required.

47-3.02B(2) Reinforcement

Reinforcing wire must comply with ASTM A 496/A 496M.

For hoops or stirrups use either (1) reinforcing wire or (2) deformed steel welded wire reinforcement. The size must be equivalent to the reinforcing steel shown. Deformed steel welded wire reinforcement must comply with ASTM A 497/A 497M.

47-3.02B(3) Concrete

Concrete test cylinders must comply with section 90-1.01D(5), except when the penetration of fresh concrete is less than 1 inch, the concrete in the test mold must be consolidated by vibrating the mold equivalent to the consolidating effort being used to consolidate the concrete in the members.

Cure crib members under section 51-4.02C.

When removed from forms, the members must present a true surface of even texture, free from honeycombs and voids larger than 1 inch in diameter and 5/16 inch in depth. Clean and fill other pockets with mortar under sections 51-1.02F and 51-1.03E(2).

External vibration resulting in adequate consolidation may be used.

If the Engineer determines that rock pockets are of the extent or character as to affect the strength of the member or to endanger the life of the steel reinforcement, replace the member.

Finish concrete-to-concrete bearing surfaces to a smooth plane. Section 51-1.03F does not apply to concrete crib members.

47-3.03 Construction

Place reinforced concrete crib walls to the lines and grades established by the Engineer. The foundation must be accepted by the Engineer before any crib members are placed.

The gap between bearing surfaces must not exceed 1/8 inch.

Where a gap of 1/16 inch to 1/8 inch exists or where shown, place a 1/16-inch pad of asphalt felt or sheet neoprene between the bearing surfaces.

47-3.04 Payment

The area of reinforced concrete crib wall is measured on the batter at the outer face for the height from the bottom of the bottom stretcher to the top of the top stretcher and for a length measured from end to end of each section of wall.

Add between the 3rd and 4th paragraphs of section 47-5.01:

10-19-12

Reinforcement must comply with section 52.

Add to section 47-6.01A:

10-19-12

The alternative earth retaining system must comply with the specifications for the type of wall being constructed.

Replace "sets" at each occurrence in the 1st paragraph of section 47-6.01C with:

04-19-13

copies

^^

48 TEMPORARY STRUCTURES

07-19-13

Replace "previously welded splice" and its definition in section 48-2.01B with:

04-19-13

previously welded splice: Splice made in a falsework member in compliance with AWS D1.1 or other recognized welding standard before contract award.

Add to section 48-2.01B:

07-19-13

independent support system: Support system that is in addition to the falsework removal system employing methods of holding falsework from above by winches, hydraulic jacks with prestressing steel, HS rods, or cranes.

04-19-13

Delete "field" in the 1st sentence of the 5th paragraph of section 48-2.01C(1).

Replace item 1 in the list in the 6th paragraph of section 48-2.01C(1) with:

04-19-13

1. Itemize the testing, inspection methods, and acceptance criteria used

Replace "sets" at each occurrence in the 4th paragraph of section 48-2.01C(2) with:

07-19-13

copies

Replace the 7th paragraph of section 48-2.01C(2) with:

09-16-11

If you submit multiple submittals at the same time or additional submittals before review of a previous submittal is complete:

1. You must designate a review sequence for submittals
2. Review time for any submittal is the review time specified plus 15 days for each submittal of higher priority still under review

Add to section 48-2.01C(2):

07-19-13

Shop drawings and calculations for falsework removal systems employing methods of holding falsework from above by winches, hydraulic jacks with prestressing steel, HS rods, or cranes must include:

1. Design code used for the analysis of the structural members of the independent support system
2. Provisions for complying with current Cal/OSHA requirements
3. Load tests and ratings within 1 year of intended use of hydraulic jacks and winches
4. Location of the winches, hydraulic jacks with prestressing steel, HS rods, or cranes
5. Analysis showing that the bridge deck and overhang are capable of supporting all loads at all time
6. Analysis showing that winches will not overturn or slide during all stages of loading
7. Location of deck and soffit openings if needed
8. Details of repair for the deck and soffit openings after falsework removal

Replace the 1st paragraph of section 48-2.01D(2) with:

04-19-13

Welding must comply with AWS D1.1 or other recognized welding standard, except for fillet welds where the load demands are 1,000 lb or less per inch for each 1/8 inch of fillet weld.

Replace the 1st through 3rd sentences in the 2nd paragraph of section 48-2.01D(2) with:

04-19-13

Perform NDT on welded splices using UT or RT. Each weld and any repair made to a previously welded splice must be tested.

Replace the 3rd paragraph of section 48-2.01D(2) with:

04-19-13

For previously welded splices, perform and document all necessary testing and inspection required to certify the ability of the falsework members to sustain the design stresses.

Add to section 48-2.01D(3)(a):

07-19-13

Falsework removal system employing methods of holding falsework from above and members of the independent support system must support the sum of the actual vertical and horizontal loads due to falsework materials, equipment, construction sequence or other causes, and wind loading. Identifiable mechanical devices used in the falsework removal plan must meet applicable industry standards and

manufacturer instructions for safe load carrying capacity. Unidentifiable winches must be capable of carrying twice the design load.

The load used for the analysis of overturning moment and sliding of the winch system must be 150 percent of the design load.

Add to section 48-2.03D:

07-19-13

Falsework removal employing methods of holding falsework by winches, hydraulic jacks with prestressing steel, HS rods, or cranes must also be supported by an independent support system when the system is not actively lowering the falsework at vehicular, pedestrian, or railroad traffic openings.

Bridge deck openings used to facilitate falsework removal activities must be formed and located away from the wheel path. The formed openings must be wedge shaped with a 5-inch maximum diameter at the top and a 3-inch maximum diameter at the bottom.

Anchor 10-inch-square aluminum or galvanized steel wire, 1/4-inch-mesh hardware cloth with a 0.025-inch minimum wire diameter firmly to the inside of the soffit openings. Construct a 1/2-inch drip groove to the outside of soffit openings.

Clean and roughen openings made in the bridge deck. Fill the deck openings with rapid setting concrete complying with section 15-5.02.

^^

49 PILING

07-18-14

Replace "sets" in the 1st paragraph of section 49-1.01C(2) with:

04-19-13

copies

Replace "set" in the 2nd paragraph of section 49-1.01C(2) with:

04-19-13

copy

Replace "Load Applied to Pile by Hydraulic Jack(s) Acting at One End of Test Beam(s) Anchored to the Pile" in the 5th paragraph of section 49-1.01D(2) with:

07-20-12

"Tensile Load Applied by Hydraulic Jack(s) Acting Upward at One End of Test Beam(s)"

Add to section 49-1.03:

04-20-12

Dispose of drill cuttings under section 19-2.03B.

Replace the paragraph of section 49-2.01A(1) with:

07-19-13

Section 49-2.01 includes general specifications for fabricating and installing driven piles.

Epoxy-coated bar reinforcing steel used for pile anchors must comply with section 52-2.02.

Replace the 2nd paragraph of section 49-2.01D with:

01-20-12

Furnish piling is measured along the longest side of the pile from the specified tip elevation shown to the plane of pile cutoff.

Replace the paragraph of section 49-2.02A(1) with:

07-19-13

Section 49-2.02 includes specifications for fabricating and installing steel pipe piles.

Replace the definitions in section 49-2.02A(2) with:

07-19-13

shop welding: Welding performed at a plant on the Department's Authorized Facility Audit List.

field welding: Welding not performed at a plant on the Department's Authorized Facility Audit List.

Replace item 2 in the list in the paragraph of section 49-2.02A(3)(b) with:

07-19-13

2. Certified mill test reports for each heat number of steel used in pipe piles being furnished.

Replace the paragraph of section 49-2.02A(4)(a) with:

07-19-13

Section 11-3.02 does not apply to shop welds in steel pipe piles fabricated at a facility on the Department's Authorized Facility Audit List.

For groove welds using submerged arc welding from both sides without backgouging, qualify the WPS under Table 4.5 of AWS D1.1.

Replace "0.45" in the 2nd paragraph of section 49-2.02B(1)(a) with:

07-19-13

0.47

Replace the 1st paragraph of section 49-2.02B(1)(b) with:

07-19-13

Welds must comply with AWS D1.1. Circumferential welds must be CJP welds.

07-19-13

Delete the 5th paragraph of section 49-2.02B(1)(b).

Add to section 49-2.02B(1):

07-19-13

49-2.02B(1)(d) Reserved

Replace "4.8.4" in item 2.3 in the list in the 2nd paragraph of section 49-2.02B(2) with:

07-19-13

4.9.4

07-19-13

Delete the 3rd paragraph of section 49-2.02C(2).

Replace the paragraph of section 49-2.03A(1) with:

07-19-13

Section 49-2.03 includes specifications for fabricating and installing structural shape steel piles.

Replace the paragraph of section 49-2.03A(3) with:

07-19-13

Submit a certified material test report and a certificate of compliance that includes a statement that all materials and workmanship incorporated in the work and all required tests and inspections of this work have been performed as described.

Replace the 1st paragraph of section 49-2.03B with:

07-19-13

Structural shape steel piles must comply with ASTM A 36/A 36M, ASTM A 572/A 572M, ASTM A 709/A 709M, or ASTM A 992/A 992M.

Replace "sets" in the 1st paragraph of section 49-2.04A(3) with:

04-19-13

copies

07-19-13

Delete the 1st paragraph of section 49-2.04A(4).

Replace the 3rd and 4th paragraphs of section 49-2.04B(2) with:

10-19-12

Piles in a corrosive environment must be steam or water cured under section 90-4.03.

If piles in a corrosive environment are steam cured, either:

1. Keep the piles continuously wet for at least 3 days. The 3 days includes the holding and steam curing periods.
2. Apply curing compound under section 90-1.03B(3) after steam curing.

Replace the 1st paragraph of section 49-3.01A with:

07-19-13

Section 49-3.01 includes general specifications for constructing CIP concrete piles.

Add to section 49-3.01A:

01-20-12

Concrete must comply with section 51.

Replace the 1st paragraph of section 49-3.01C with:

01-20-12

Except for CIDH concrete piles constructed under slurry, construct CIP concrete piles such that the excavation methods and the concrete placement procedures provide for placing the concrete against undisturbed material in a dry or dewatered hole.

Replace "Reserved" in section 49-3.02A(2) with:

01-20-12

dry hole:

1. Except for CIDH concrete piles specified as end bearing, a drilled hole that:
   1.1. Accumulates no more than 12 inches of water in the bottom of the drilled hole during a period of 1 hour without any pumping from the hole during the hour.
   1.2. Has no more than 3 inches of water in the bottom of the drilled hole immediately before placing concrete.
2. For CIDH concrete piles specified as end bearing, a drilled hole free of water without the use of pumps.

Replace "Reserved" in section 49-3.02A(3)(a) with:

01-20-12

If plastic spacers are proposed for use, submit the manufacturer's data and a sample of the plastic spacer. Allow 10 days for review.

Replace item 5 in the list in the 1st paragraph of section 49-3.02A(3)(b) with:

10-19-12

5. Methods and equipment for determining:
   5.1. Depth of concrete
   5.2. Theoretical volume of concrete to be placed, including the effects on volume if casings are withdrawn
   5.3. Actual volume of concrete placed

Add to the list in the 1st paragraph of section 49-3.02A(3)(b):

01-18-13

8. Drilling sequence and concrete placement plan.

Replace item 2 in the list in the 1st paragraph of section 49-3.02A(3)(g) with:

01-20-12

2. Be sealed and signed by an engineer who is registered as a civil engineer in the State. This requirement is waived for either of the following conditions:
   2.1. The proposed mitigation will be performed under the current Department-published version of *ADSC Standard Mitigation Plan 'A' - Basic Repair* without exception or modification.
   2.2. The Engineer determines that the rejected pile does not require mitigation due to structural, geotechnical, or corrosion concerns, and you elect to repair the pile using the current Department-published version of *ADSC Standard Mitigation Plan 'B' - Grouting Repair* without exception or modification.

Replace "49-2.03A(4)(d)" in the 1st paragraph of section 49-3.02A(4)(d)(i) with:

07-19-13

49-3.02A(4)(d)

Add to the beginning of section 49-3.02A(4)(d)(ii):

07-19-13

If the drilled hole is dry or dewatered without the use of temporary casing to control ground water, installation of inspection pipes is not required.

Replace item 1 in the list in the 1st paragraph of section 49-3.02A(4)(d)(ii) with:

01-20-12

1. Inspection pipes must be schedule 40 PVC pipe complying with ASTM D 1785 with a nominal pipe size of 2 inches. Watertight PVC couplers complying with ASTM D 2466 are allowed to facilitate pipe lengths in excess of those commercially available. Log the location of the inspection pipe couplers with respect to the plane of pile cutoff.

Add to section 49-3.02A(4)(d)(iv):

01-20-12

If the Engineer determines it is not feasible to use one of ADSC's standard mitigation plans to mitigate the pile, schedule a meeting and meet with the Engineer before submitting a nonstandard mitigation plan.

The meeting attendees must include your representatives and the Engineer's representatives involved in the pile mitigation. The purpose of the meeting is to discuss the type of pile mitigation acceptable to the Department.

Provide the meeting facility. The Engineer conducts the meeting.

Replace the 1st paragraph of section 49-3.02B(5) with:

07-19-13

Grout must consist of cementitious material and water, and may contain an admixture if authorized. Do not exceed 5 gallons of water per 94 lb of cement.

Cementitious material must comply with section 90-1.02B, except SCMs are not required.

Water must comply with section 90-1.02D. If municipally supplied potable water is used, the testing specified in section 90-1.02D is waived.

Admixtures must comply with section 90, except admixtures must not contain chloride ions in excess of 0.25 percent by weight.

Use aggregate to extend the grout as follows:

1. Aggregate must consist of at least 70 percent fine aggregate and approximately 30 percent pea gravel, by weight.
2. Fine aggregate must comply with section 90-1.02C(3).
3. Size of pea gravel must be such that 100 percent passes the 1/2-inch sieve, at least 85 percent passes the 3/8-inch sieve, and not more than 5 percent passes the no. 8 sieve.
4. Minimum cementitious material content of the grout must not be less than 845 lb/cu yd of grout.

Mix the grout as follows:

1. Add water to the mixer followed by cementitious material, aggregates, and any admixtures.
2. Mix the grout with mechanical mixing equipment that produces a uniform and thoroughly mixed grout.
3. Agitate the grout continuously until the grout is pumped.
4. Do not add water after initial mixing.

Replace section 49-3.02B(8) with:

01-20-12

49-3.02B(8) Spacers

Spacers must comply with section 52-1.03D, except you may use plastic spacers.

Plastic spacers must:

1. Comply with sections 3.4 and 3.5 of the Concrete Reinforcing Steel Institute's *Manual of Standard Practice*
2. Have at least 25 percent of their gross plane area perforated to compensate for the difference in the coefficient of thermal expansion between the plastic and concrete
3. Be of commercial quality

Add between the 1st and 2nd paragraphs of section 49-3.02C(2):

07-19-13

For CIDH concrete piles with a pile cap, the horizontal tolerance at the center of each pile at pile cut-off is the larger of 1/24 of the pile diameter or 3 inches. The horizontal tolerance for the center-to-center spacing of 2 adjacent piles is the larger of 1/24 of the pile diameter or 3 inches.

Add between the 3rd and 4th paragraphs of section 49-3.02C(2):

07-18-14

If drilling slurry is used during excavation, maintain the slurry level at least 10 feet above the piezometric head.

Add to section 49-3.02C(4):

01-20-12

Unless otherwise shown, the bar reinforcing steel cage must have at least 3 inches of clear cover measured from the outside of the cage to the sides of the hole or casing.

Place spacers at least 5 inches clear from any inspection tubes.

Place plastic spacers around the circumference of the cage and at intervals along the length of the cage, as recommended by the manufacturer.

07-19-13

For a single CIDH concrete pile supporting a column:

1. If the pile and the column share the same reinforcing cage diameter, this cage must be accurately placed as shown
2. If the pile reinforcing cage is larger than the column cage and the concrete is placed under dry conditions, maintain a clear horizontal distance of at least 3.5 inches between the two cages
3. If the pile reinforcing cage is larger than the column cage and the concrete is placed under slurry, maintain a clear horizontal distance of at least 5 inches between the two cages

Replace section 49-3.02C(6) with:

07-19-13

49-3.02C(6) Construction Joint

Section 49-3.02C(6) applies to CIDH concrete piles where a construction joint is shown.

If a permanent steel casing is not shown, you must furnish and install a permanent casing. The permanent casing must:

1. Be watertight and of sufficient strength to prevent damage and to withstand the loads from installation procedures, drilling and tooling equipment, lateral concrete pressures, and earth pressures.
2. Extend at least 5 feet below the construction joint. If placing casing into rock, the casing must extend at least 2 feet below the construction joint.
3. Not extend above the top of the drilled hole or final grade whichever is lower.
4. Not increase the diameter of the CIDH concrete pile more than 2 feet.
5. Be installed by impact or vibratory hammers, oscillators, rotators, or by placing in a drilled hole. Casings placed in a drilled hole must comply with section 49-3.02C(5).

Section 49-2.01A(4)(b) does not apply to permanent casings specified in this section.

Replace item 3 in the list in the 11th paragraph of section 49-3.02C(8) with:

07-18-14

3. Maintain the slurry level at least10 feet above the piezometric head

Add to section 49-4.01:

07-19-13

Steel soldier piles must comply with section 49-2.03.

Replace the headings and paragraphs in section 49-4.02 with:

07-19-13

Concrete anchors must comply with the specifications for studs in clause 7 of AWS D1.1.

^^

50 PRESTRESSING CONCRETE

07-19-13

Replace "sets" at each occurrence in the 2nd and 3rd paragraphs of section 50-1.01C(3) with:

04-19-13

copies

Add to section 50-1.01C(3):

07-19-13

Include a grouting plan with your shop drawing submittal. The grouting plan must include:

1. Detailed grouting procedures
2. Type, quantity, and brand of materials to be used
3. Type of equipment to be used including provisions for backup equipment
4. Types and locations of grout inlets, outlets, and vents
5. Methods to clean ducts before grouting
6. Methods to control the rate of flow within ducts
7. Theoretical grout volume calculations for each duct
8. Duct repair procedures due to an air pressure test failure
9. Mixing and pumping procedures
10. Direction of grouting
11. Sequence of use of inlets and outlets
12. Procedure for handling blockages
13. Proposed forms for recording grouting information
14. Procedure for secondary grouting
15. Names of people who will perform grouting activities including their relevant experience and certifications

Add to section 50-1.01C:

07-19-13

50-1.01C(5) Grout

Submit a daily grouting report for each day grouting is performed. Submit the report within 3 days after grouting. The report must be signed by the technician supervising the grouting activity. The report must include:

1. Identification of each tendon

2. Date grouting occurred
3. Time the grouting started and ended
4. Date of placing the prestressing steel in the ducts
5. Date of stressing
6. Type of grout used
7. Injection end and applied grouting pressure
8. Actual and theoretical quantity of grout used to fill duct
9. Ratio of actual to theoretical grout quantity
10. Records of air, grout, and structure surface temperatures during grouting.
11. Summary of tests performed and results, except submit compressive strength and chloride ion test results within 48 hours of test completion
12. Names of personnel performing the grouting activity
13. Summary of problems encountered and corrective actions taken
14. Summary of void investigations and repairs made

Replace the introductory clause in the 1st paragraph of section 50-1.01C(4) with:

07-19-13

Submit test samples for the materials shown in the following table to be used in the work:

Add between "the" and "test samples" in the 1st paragraph of section 50-1.01D(2):

07-19-13

prestressing steel

Replace the 3rd paragraph of section 50-1.01D(2) with:

10-19-12

The Department may verify the prestressing force using the Department's load cells.

Replace the 3rd paragraph in section 50-1.01D(3) with:

07-19-13

Each pressure gage must be fully functional and have an accurately reading, clearly visible dial or display. The dial must be at least 6 inches in diameter and graduated in 100 psi increments or less.

Add between the 5th and 6th paragraphs of section 50-1.01D(3):

07-19-13

Each jack and its gages must be calibrated as a unit.

Replace the 6th paragraph in section 50-1.01D(3) with:

07-19-13

Each jack used to tension prestressing steel permanently anchored at 25 percent or more of its specified minimum ultimate tensile strength must be calibrated by METS within 1 year of use and after each repair. You must:

1. Schedule the calibration of the jacking equipment with METS
2. Mechanically calibrate the gages with a dead weight tester or other authorized means before calibration of the jacking equipment by METS
3. Verify that the jack and supporting systems are complete, with proper components, and are in good operating condition
4. Provide labor, equipment, and material to (1) install and support the jacking and calibration equipment and (2) remove the equipment after the calibration is complete
5. Plot the calibration results

Each jack used to tension prestressing steel permanently anchored at less than 25 percent of its specified minimum ultimate tensile strength must be calibrated by an authorized laboratory within 6 months of use and after each repair.

Add to section 50-1.01D:

07-19-13

50-1.01D(4) Pressure Testing Ducts

For post-tensioned concrete bridges, pressure test each duct with compressed air after stressing. To pressure test the ducts:

1. Seal all inlets, outlets, and grout caps.
2. Open all inlets and outlets on adjacent ducts.
3. Attach an air compressor to an inlet at 1 end of the duct. The attachment must include a valve that separates the duct from the air source.
4. Attach a pressure gage to the inlet at the end of the duct.
5. Pressurize the duct to 50 psi.
6. Lock-off the air source.
7. Record the pressure loss after 1 minute.
8. If there is a pressure loss exceeding 25 psi, repair the leaks with authorized methods and retest.

Compressed air used to clear and test the ducts must be clean, dry, and free of oil or contaminants.

50-1.01D(5) Duct Demonstration of Post-Tensioned Members

Before placing forms for deck slabs of box girder bridges, demonstrate that any prestressing steel placed in the ducts is free and unbonded. If no prestressing steel is in the ducts, demonstrate that the ducts are unobstructed.

If prestressing steel is installed after the concrete is placed, demonstrate that the ducts are free of water and debris immediately before installing the steel.

Before post-tensioning any member, demonstrate that the prestressing steel is free and unbonded in the duct.

The Engineer must witness all demonstrations.

50-1.01D(6) Void Investigation

In the presence of the Engineer, investigate the ducts for voids between 24 hours and 72 hours after grouting completion. As a minimum, inspect the inlet and outlet ports at the anchorages and at high points in the tendons for voids after removal. Completely fill any voids found with secondary grout.

50-1.01D(7) Personnel Qualifications

Perform post-tensioning field activities, including grouting, under the direct supervision of a technician certified as a level 2 Bonded PT Field Specialist through the Post-Tensioning Institute. Grouting activities may be performed under the direct supervision of a technician certified as a Grouting Technician through the American Segmental Bridge Institute.

Replace the 6th paragraph of section 50-1.02B with:

07-19-13

Package the prestressing steel in containers or shipping forms that protect the steel against physical damage and corrosion during shipping and storage.

Replace the 13th paragraph of section 50-1.02B with:

07-19-13

Prestressing steel is rejected if surface rust either:

1. Cannot be removed by hand-cleaning with a fine steel wool pad

2. Leaves pits visible to the unaided eye after cleaning

Replace the 4th paragraph of section 50-1.02C with:

07-19-13

Admixtures must comply with section 90, except admixtures must not contain chloride ions in excess of 0.25 percent by weight.

07-19-13

Delete the 5th paragraphs of section 50-1.02C.

Add to section 50-1.02C:

07-19-13

Secondary grout must:

1. Comply with ASTM C 1107
2. Not have a deleterious effect on the steel, concrete, or bond strength of the steel to concrete

Replace item 9 including items 9.1 and 9.2 in the list in the 1st paragraph of section 50-1.02D with:

07-19-13

9. Have an inside cross-sectional area of at least 2.5 times the net area of the prestressing steel for multistrand tendons

Replace "3/8" in item 10 in the list in the 1st paragraph of section 50-1.02D with:

07-19-13

1/2

07-19-13

Delete the 2nd sentences in the 1st paragraph of section 50-1.02E.

Replace section 50-1.02F with:

07-19-13

50-1.02F Permanent Grout Caps

Permanent grout caps for anchorage systems of post-tensioned tendons must:

1. Be glass-fiber-reinforced plastic with antioxidant additives. The environmental stress-cracking failure time must be at least 192 hours under ASTM D 1693, Condition C.
2. Completely cover and seal the wedge plate or anchorage head and all exposed metal parts of the anchorage against the bearing plate using neoprene O-ring seals.
3. Have a grout vent at the top of the cap.
4. Be bolted to the anchorage with stainless steel complying with ASTM F 593, alloy 316. All fasteners, including nuts and washers, must be alloy 316.
5. Be pressure rated at or above 150 psi.

Add to section 50-1.02:

09-16-11

50-1.02G Sheathing

Sheathing for debonding prestressing strand must:

1. Be split or un-split flexible polymer plastic tubing

2. Have a minimum wall thickness of 0.025 inch
3. Have an inside diameter exceeding the maximum outside diameter of the strand by 0.025 to 0.14 inch

Split sheathing must overlap at least 3/8 inch.

Waterproofing tape used to seal the ends of the sheathing must be flexible adhesive tape.

The sheathing and waterproof tape must not react with the concrete, coating, or steel.

Replace the 2nd paragraph of section 50-1.03A(3) with:

07-19-13

After installation, cover the duct ends and vents to prevent water or debris from entering.

Add to section 50-1.03A(3):

07-19-13

Support ducts vertically and horizontally during concrete placement at a spacing of at most 4 feet.

07-19-13

Delete "at least" in the 1st paragraph of section 50-1.03B(1).

Add to section 50-1.03B(1):

01-20-12

After seating, the maximum tensile stress in the prestressing steel must not exceed 75 percent of the minimum ultimate tensile strength shown.

07-19-13

Delete the 1st through 4th paragraphs of section 50-1.03B(2)(a).

Replace "temporary tensile strength" in the 7th paragraph of section 50-1.03B(2)(a) with:

07-19-13

temporary tensile stress

Add to section 50-1.03B(2)(a):

07-19-13

If prestressing strand is installed using the push-through method, use guide caps at the front end of each strand to protect the duct from damage.

Add to the list in the 2nd paragraph of section 50-1.03B(2)(c):

07-19-13

3. Be equipped with permanent grout caps

Replace section 50-1.03B(2)(d) with:

07-19-13

50-1.03B(2)(d) Bonding and Grouting

50-1.03B(2)(d)(i) General

Bond the post-tensioned prestressing steel to the concrete by completely filling the entire void space between the duct and the prestressing steel with grout.

Ducts, vents, and grout caps must be clean and free from water and deleterious materials that would impair bonding of the grout or interfere with grouting procedures. Compressed air used for cleaning must be clean, dry, and free of oil or contaminants.

Prevent the leakage of grout through the anchorage assembly by positive mechanical means.

Before starting daily grouting activities, drain the pump system to remove any water from the piping system.

Break down and thoroughly clean the pump and piping system after each grouting session.

After completing duct grouting activities:

1. Abrasive blast clean and expose the aggregate of concrete surfaces where concrete is to be placed to cover and encase the anchorage assemblies
2. Remove the ends of vents 1 inch below the roadway surface

50-1.03B(2)(d)(ii) Mixing and Proportioning

Proportion solids by weight to an accuracy of 2 percent.

Proportion liquids by weight or volume to an accuracy of 1 percent.

Mix the grout as follows:

1. Add water to the mixer followed by the other ingredients.
2. Mix the grout with mechanical mixing equipment that produces a uniform and thoroughly mixed grout without an excessive temperature increase or loss of properties of the mixture.
3. Do not exceed 5 gal of water per 94 lb of cement or the quantity of water in the manufacturer's instructions, whichever is less.
4. Agitate the grout continuously until the grout is pumped. Do not add water after the initial mixing.

50-1.03B(2)(d)(iii) Placing

Pump grout into the duct within 30 minutes of the 1st addition of the mix components.

Inject grout from the lowest point of the duct in an uphill direction in 1 continuous operation maintaining a one-way flow of the grout. You may inject from the lowest anchorage if complete filling is ensured.

Before injecting grout, open all vents.

Continuously discharge grout from the vent to be closed. Do not close any vent until free water, visible slugs of grout, and entrapped air have been ejected and the consistency of the grout flowing from the vent is equivalent to the injected grout.

Pump the grout at a rate of 16 to 50 feet of duct per minute.

Conduct grouting at a pressure range of 10 to 50 psi measured at the grout inlet. Do not exceed maximum pumping pressure of 150 psi at the grout inlet.

As grout is injected, close the vents in sequence in the direction of flow starting with the closest vent.

Before closing the final vent at the grout cap, discharge at least 2 gal of grout into a clean receptacle.

Bleed all high point vents.

Lock a pressure of 5 psi into the duct by closing the grout inlet valve.

50-1.03B(2)(d)(iv) Weather Conditions

If hot weather conditions will contribute to quick stiffening of the grout, cool the grout by authorized methods as necessary to prevent blockages during pumping activities.

If freezing weather conditions are anticipated during and following the placement of grout, provide adequate means to protect the grout in the ducts from damage by freezing.

50-1.03B(2)(d)(v) Curing

During grouting and for a period of 24 hours after grouting, eliminate vibration from contractor controlled sources within 100 feet of the span in which grouting is taking place, including from moving vehicles, jackhammers, large compressors or generators, pile driving activities, soil compaction, and falsework removal. Do not vary loads on the span.

For PC concrete members, do not move or disturb the members after grouting for 24 hours. If ambient temperature drops below 50 degrees F, do not move or disturb the members for 48 hours.

Do not remove or open valves until grout has cured for at least 24 hours.

50-1.03B(2)(d)(vi) Grouting Equipment

Grouting equipment must be:

1. Capable of grouting at a pressure of at least 100 psi
2. Equipped with a pressure gage having a full-scale reading of not more than 300 psi
3. Able to continuously grout the longest tendon on the project in less than 20 minutes

Grout must pass through a screen with clear openings of 1/16 inch or less before entering the pump.

Fit grout injection pipes, ejection pipes, and vents with positive mechanical shutoff valves capable of withstanding the pumping pressures. Do not remove or open valves until the grout has set. If authorized, you may substitute mechanical valves with suitable alternatives after demonstrating their effectiveness.

Provide a standby grout mixer and pump.

50-1.03B(2)(d)(vii) Grout Storage

Store grout in a dry environment.

50-1.03B(2)(d)(viii) Blockages

If the grouting pressure reaches 150 psi, close the inlet and pump the grout at the next vent that has just been or is ready to be closed as long as a one-way flow is maintained. Do not pump grout into a succeeding outlet from which grout has not yet flowed.

When complete grouting of the tendon cannot be achieved by the steps specified, stop the grouting operation.

50-1.03B(2)(d)(ix) Secondary Grouting

Perform secondary grouting by vacuum grouting under the direct supervision of a person who has been trained and has experience in the use of vacuum grouting equipment and procedures.

The vacuum grouting process must be able to determine the size of the void and measure the volume of grout filling the void.

Vacuum grouting equipment must consist of:

1. Volumeter for the measurement of void volume
2. Vacuum pump with capacity of at least 10 cfm and equipped with a flow meter capable of measuring the amount of grout being injected

50-1.03B(2)(d)(x) Vertical Tendon Grouting

Provide a standpipe at the upper end of the tendon to collect bleed water and allow it to be removed from the grout. The standpipe must be large enough to prevent the grout elevation from dropping below the highest point of the upper anchorage device. If the grout level drops to the highest point of the upper anchorage device, immediately add grout to the standpipe.

Remove the standpipe after the grout has hardened.

For vertical tendons in excess of 100 feet high or if grouting pressure exceeds 145 psi, inject grout at a higher vent from which grout has already flowed to maintain one-way flow.

50-1.03B(2)(d)(xi) Vents

Place vents at the following locations:

1. Anchorage areas at both ends of the tendon
2. Each high point
3. 4 feet upstream and downstream of each crest of a high point
4. Each change in the cross section of duct

Add to section 50-1.03B(2):

09-16-11

50-1.03B(2)(e) Debonding Prestressing Strands

Where shown, debond prestressing strands by encasing the strands in plastic sheathing along the entire length shown and sealing the ends of the sheathing with waterproof tape.

Distribute the debonded strands symmetrically about the vertical centerline of the girder. The debonded lengths of pairs of strands must be equal.

Do not terminate debonding at any one cross section of the member for more than 40 percent of the debonded strands or 4 strands, whichever is greater.

Thoroughly seal the ends with waterproof tape to prevent the intrusion of water or cement paste before placing the concrete.

^^

51 CONCRETE STRUCTURES

07-18-14

Replace the paragraphs of section 51-1.01A with:

10-19-12

Section 51-1 includes general specifications for constructing concrete structures.

Earthwork for the following concrete structures must comply with section 19-3:

1. Sound wall footings
2. Sound wall pile caps
3. Culverts
4. Barrier slabs
5. Junction structures
6. Minor structures
7. Pipe culvert headwalls, endwalls, and wingwalls for a pipe with a diameter of 5 feet or greater

Falsework must comply with section 48-2.

Joints must comply with section 51-2.

Elastomeric bearing pads must comply with section 51-3.

Reinforcement for the following concrete structures must comply with section 52:

1. Sound wall footings
2. Sound wall pile caps
3. Barrier slabs
4. Junction structures
5. Minor structures
6. PC concrete members

You may use RSC for a concrete structure only where the specifications allow the use of RSC.

Replace "sets" in the 1st paragraph of section 51-1.01C(2) with:

07-19-13

copies

Replace the heading of section 51-1.01D(4) with:

04-19-13

Testing Concrete Surfaces

Add to section 51-1.01D(4)(a):

04-19-13

The Engineer tests POC deck surfaces for smoothness and crack intensity.

Add to the list in the 1st paragraph of section 51-1.01D(4)(b):

04-19-13

3. Completed deck surfaces, including ramps and landings of POCs

Replace the 4th paragraph in section 51-1.01D(4)(b) with:

04-19-13

Except for POCs, surface smoothness is tested using a bridge profilograph under California Test 547. Two profiles are obtained in each lane approximately 3 feet from the lane lines and 1 profile is obtained in each shoulder approximately 3 feet from the curb or rail face. Profiles are taken parallel to the direction of traffic.

Add between the 5th and 6th paragraphs of section 51-1.01D(4)(b):

04-19-13

POC deck surfaces must comply with the following smoothness requirements:

1. Surfaces between grade changes must not vary more than 0.02 foot from the lower edge of a 12-foot-long straightedge placed parallel to the centerline of the POC
2. Surface must not vary more than 0.01 foot from the lower edge of a 6-foot-long straightedge placed perpendicular to the centerline of the POC

Add to section 51-1.01D(4)(d):

04-19-13

The Engineer measures crack intensity of POC deck surfaces after curing, before prestressing, and before falsework release. Clean the surface for the Engineer to measure surface crack intensity.

In any 100 sq ft portion of a new POC deck surface, if there are more than 10 feet of cracks having a width at any point of over 0.02 inch, treat the deck with methacrylate resin under section 15-5.05. Treat the entire deck width between the curbs to 5 feet beyond where the furthest continuous crack emanating from the 100 sq ft section is 0.02 inch wide. Treat the deck surface before grinding.

Replace the 2nd paragraph of section 51-1.02B with:

07-19-13

Except for minor structures, the minimum required 28-day compressive strength for concrete in structures or portions of structures is the compressive strength described or 3,600 psi, whichever is greater.

Add to section 51-1.03C(2)(c)(i):

04-20-12

Permanent steel deck forms are only allowed where shown or if specified as an option in the special provisions.

Replace the 3rd paragraph of section 51-1.03C(2)(c)(ii) with:

04-20-12

Compute the physical design properties under AISI's *North American Specification for the Design of Cold-Formed Steel Structural Members*.

Replace the 8th paragraph of section 51-1.03D(1) with:

10-19-12

Except for concrete placed as pipe culvert headwalls and endwalls, slope paving and aprons, and concrete placed under water, consolidate concrete using high-frequency internal vibrators within 15 minutes of placing concrete in the forms. Do not attach vibrators to or hold them against forms or reinforcing steel. Do not displace reinforcement, ducts, or prestressing steel during vibrating.

Add to section 51-1.03E(5):

08-05-11

Drill the holes without damaging the adjacent concrete. If reinforcement is encountered during drilling before the specified depth is attained, notify the Engineer. Unless coring through the reinforcement is authorized, drill a new hole adjacent to the rejected hole to the depth shown.

Add to section 51-1.03F(5)(a):

04-19-13

For approach slabs, sleeper slabs, and other roadway surfaces of concrete structures, texture the roadway surface as specified for bridge deck surfaces in section 51-1.03F(5)(b).

Replace "Reserved" in section 51-1.03F(5)(b) with:

07-18-14

51-1.03F(5)(b)(i) General

Except for bridge widenings, texture roadway surfaces of bridge decks, approach slabs, and sleeper slabs, and other roadway surfaces of concrete structures longitudinally by grinding and grooving or by longitudinal tining.

For bridge widenings, texture the roadway surfaces longitudinally by longitudinal tining.

04-20-12

In freeze-thaw areas, do not texture PCC surfaces of bridge decks.

51-1.03F(5)(b)(ii) Grinding and Grooving

When texturing the deck surface by grinding and grooving, place a 1/4 inch of sacrificial concrete cover on the bridge deck above the finished grade shown. Place items to be embedded in the concrete based on the final profile grade elevations shown. Construct joint seals after completing the grinding and grooving.

Before grinding and grooving, deck surfaces must comply with the smoothness and deck crack treatment requirements.

Grind and groove the deck surface as follows:

1. Grind the surface to within 18 inches of the toe of the barrier under section 42-3. Grinding must not reduce the concrete cover on reinforcing steel to less than 1-3/4 inches.

2. Groove the ground surfaces longitudinally under section 42-2. The grooves must be parallel to the centerline.

51-1.03F(5)(b)(iii) Longitudinal Tining

When texturing the deck surface by longitudinal tining, perform initial texturing with a burlap drag or broom device that produces striations parallel to the centerline. Perform final texturing with spring steel tines that produce grooves parallel with the centerline.

The tines must:

1. Be rectangular in cross section
2. Be from 3/32 to 1/8 inch wide on 3/4-inch centers
3. Have enough length, thickness, and resilience to form grooves approximately 3/16 inch deep

Construct grooves to within 6 inches of the layout line of the concrete barrier toe. Grooves must be from 1/8 to 3/16 inch deep and 3/16 inch wide after concrete has hardened.

For irregular areas and areas inaccessible to the grooving machine, you may hand construct grooves. Hand-constructed grooves must comply with the specifications for machine-constructed grooves.

Tining must not cause tearing of the deck surface or visible separation of coarse aggregate at the surface.

Add to section 51-1.03F:

04-19-13

51-1.03F(6) Finishing Pedestrian Overcrossing Surfaces

Construct deck surfaces, including ramps and landings of POCs to the grade and cross section shown. Surfaces must comply with the specified smoothness, surface texture, and surface crack requirements.

The Engineer sets deck elevation control points for your use in establishing the grade and cross section of the deck surface. The grade established by the deck elevation control points includes all camber allowances. Except for landings, elevation control points include the beginning and end of the ramp and will not be closer together than approximately 8 feet longitudinally and 4 feet transversely to the POC centerline. Landing elevation control points are at the beginning and the end of the landing.

Broom finish the deck surfaces of POCs. Apply the broom finish perpendicular to the path of travel. You may apply water mist to the surface immediately before brooming.

Clean any discolored concrete by abrasive blast cleaning or other authorized methods.

Replace the paragraphs of section 51-1.04 with:

10-19-12

If concrete involved in bridge work is not designated by type and is not otherwise paid for under a separate bid item, the concrete is paid for as structural concrete, bridge.

The payment quantity for structural concrete includes the volume in the concrete occupied by bar reinforcing steel, structural steel, prestressing steel materials, and piling.

The payment quantity for seal course concrete is the actual volume of seal course concrete placed except the payment quantity must not exceed the volume of concrete contained between vertical planes 1 foot outside the neat lines of the seal course shown. The Department does not adjust the unit price for an increase or decrease in the seal course concrete quantity.

Structural concrete for pier columns is measured as follows:

1. Horizontal limits are vertical planes at the neat lines of the pier column shown.
2. Bottom limit is the bottom of the foundation excavation in the completed work.
3. Upper limit is the top of the pier column concrete shown.

The payment quantity for drill and bond dowel is determined from the number and depths of the holes shown.

Replace section 51-2.01B(2) with:

04-19-13

51-2.01B(2) Reserved

04-19-13

Delete the 4th paragraph of section 51-2.01C.

Replace "SSPC-QP 3" in the 1st paragraph of section 51-2.02A(2) with:

10-19-12

AISC-420-10/SSPC-QP 3

Replace the 2nd and 3rd paragraphs of section 51-2.02B(3)(b) with:

04-20-12

Concrete saws for cutting grooves in the concrete must have diamond blades with a minimum thickness of 3/16 inch. Cut both sides of the groove simultaneously for a minimum 1st pass depth of 2 inches. The completed groove must have:

1. Top width within 1/8 inch of the width shown or ordered
2. Bottom width not varying from the top width by more than 1/16 inch for each 2 inches of depth
3. Uniform width and depth

Cutting grooves in existing decks includes cutting any conflicting reinforcing steel.

Replace "sets" in the 1st and 2nd paragraphs of section 51-2.02D(1)(c)(ii) with:

04-19-13

copies

Replace "set" in the 7th paragraph of section 51-2.02D(1)(c)(ii) with:

04-19-13

copy

Add to the 1st paragraph of section 51-2.02D(3):

04-19-13

POC deck surfaces must comply with section 51-1.03F(6) before placing and anchoring joint seal assemblies.

Replace "sets" in the 2nd paragraph of section 51-2.02E(1)(c) with:

04-19-13

copies

Replace "set" in the 6th paragraph of section 51-2.02E(1)(c) with:

04-19-13

copy

Replace the 2nd paragraph of section 51-2.02E(1)(e) with:

08-05-11

Except for components in contact with the tires, the design loading must be the AASHTO LRFD Bridge Design Specifications Design Truck with 100 percent dynamic load allowance. Each component in contact with the tires must support a minimum of 80 percent of the AASHTO LRFD Bridge Design Specifications Design Truck with 100 percent dynamic load allowance. The tire contact area must be 10 inches measured normal to the longitudinal assembly axis by 20 inches wide. The assembly must provide a smooth-riding joint without slapping of components or tire rumble.

Replace "sets" in the 1st and 2nd paragraphs of section 51-2.02F(1)(c) with:

04-19-13

copies

Add between the 1st and 2nd paragraphs of section 51-4.01A:

10-19-12

Prestressing concrete members must comply with section 50.

04-20-12

Delete the 2nd paragraph of section 51-4.01A.

Replace the 3rd paragraph of section 51-4.01C(2) with:

04-20-12

For segmental or spliced-girder construction, shop drawings must include the following additional information:

1. Details showing construction joints or closure joints
2. Arrangement of bar reinforcing steel, prestressing tendons, and pressure-grouting pipe
3. Materials and methods for making closures
4. Construction joint keys and surface treatment
5. Other requested information

For segmental girder construction, shop drawings must include concrete form and casting details.

Replace "sets" in the 1st paragraph of section 51-4.01C(3) with:

04-19-13

copies

10-19-12

Delete the 1st and 2nd paragraphs of section 51-4.02A.

Replace the 3rd paragraph of section 51-4.02B(2) with:

04-20-12

For segmental or spliced-girder construction, materials for construction joints or closure joints at exterior girders must match the color and texture of the adjoining concrete.

Add to section 51-4.02B(2):

04-20-12

At spliced-girder closure joints:

1. If shear keys are not shown, the vertical surfaces of the girder segment ends must be given a coarse texture as specified for the top surface of PC members.
2. Post-tensioning ducts must extend out of the vertical surface of the girder segment closure end sufficiently to facilitate splicing of the duct.

For spliced girders, pretension strand extending from the closure end of the girder segment to be embedded in the closure joint must be free of mortar, oil, dirt, excessive mill scale and scabby rust, and other coatings that would destroy or reduce the bond.

Add to section 51-4.03B:

04-20-12

The specifications for prestressing force distribution and sequencing of stressing in the post-tensioning activity in 50-1.03B(2)(a) do not apply if post-tensioning of spliced girders before starting deck construction is described. The composite deck-girder structure must be post-tensioned in a subsequent stage.

Temporary spliced-girder supports must comply with the specifications for falsework in section 48-2.

Before post-tensioning of spliced girders, remove the forms at CIP concrete closures and intermediate diaphragms to allow inspection for concrete consolidation.

Add to section 51-5.01A:

07-19-13

Structure excavation and backfill must comply with section 19-3.

Treated permeable base must comply with section 29.

Replace the paragraph in section 51-5.02G with:

04-18-14

HMA for a temporary roadway structural section must comply with the specifications for minor HMA in section 39.

07-19-13

Delete the 1st paragraph of section 51-5.03B(3).

07-19-13

Delete the 2nd paragraph of section 51-5.03D(1).

Add between the 1st and 2nd paragraphs of section 51-7.01A:

10-19-12

Minor structures include:

1. Pipe culvert headwalls and endwalls for a pipe with a diameter less than 5 feet
2. Drainage inlets
3. Other structures described as minor structures

10-19-12

Delete the 4th paragraph of section 51-7.01A.

Replace the 1st and 2nd paragraphs of section 51-7.01B with:

10-19-12

Concrete must comply with the specifications for minor concrete.

Add to section 51:

10-19-12

51-8–51-15 RESERVED

^^

52 REINFORCEMENT

07-18-14

Add to section 52-1.01A:

07-20-12

Splicing of bar reinforcement must comply with section 52-6.

Replace the 1st and 2nd paragraphs of section 52-1.02B with:

10-19-12

Reinforcing bars must be deformed bars complying with ASTM A 706/A 706M, Grade 60, except you may use:

1. Deformed bars complying with ASTM A 615/A 615M, Grade 60, in:
   - 1.1. Junction structures
   - 1.2. Sign and signal foundations
   - 1.3. Minor structures
   - 1.4. Concrete crib members
   - 1.5. Mechanically-stabilized-embankment concrete panels
   - 1.6. Masonry block sound walls
2. Deformed or plain bars complying with ASTM A 615/A 615M, Grade 40 or 60, in:
   - 2.1. Slope and channel paving
   - 2.2. Concrete barriers Type 50 and 60
3. Plain bars for spiral or hoop reinforcement in structures and concrete piles

Add to the list in the 3rd paragraph of section 52-1.02B:

04-20-12

9. Shear reinforcement stirrups in PC girders

Replace the 9th paragraph of section 52-1.03D with:

07-18-14

Terminate each unit of spiral reinforcement at both ends by lapping the spiral reinforcement on itself for at least 80 diameters followed by (1) a 135-degree hook with a 6-inch tail hooked around an intersecting longitudinal bar or (2) a mechanical lap splice coupler. Discontinuities in spiral reinforcement may be made only where shown or authorized. The spiral on each side of a discontinuity or a lap splice is a separate unit. Where discontinuities in spiral reinforcement are not allowed, splice the spiral reinforcement. Lap splices in spiral reinforcement must be lapped at least 80 diameters followed by (1) a 135-degree hook with a 6-inch tail hooked around an intersecting longitudinal bar or (2) a mechanical lap splice coupler.

Add to section 52-5.01D:

07-18-14

52-5.01D(4) Quality Assurance Testing

Secure, identify, and transport QA headed bar reinforcement test samples to METS as specified for splice test samples in section 52-5.01D(3)(b).

The Department tests headed bar reinforcement as specified for QC testing in section 52-5.01D(3)(b).

The Department will notify you of the QA test results for each bundle of 4 test samples of splices within 3 business days after METS receives the bundle unless more than 1 bundle is received on the same day, in which case allow 2 additional business days for each additional bundle received.

Replace the 6th paragraph of section 52-6.01D(4)(a) with:

01-18-13

Before performing service splice or ultimate butt splice testing, perform total slip testing on the service splice or ultimate butt splice test samples under section 52-6.01D(4)(b).

Replace section 52-6.02D with:

10-21-11

52-6.02D Ultimate Butt Splice Requirements

When tested under California Test 670, ultimate butt splice test samples must demonstrate necking as either of the following:

1. For "Necking (Option I)," the test sample must rupture in the reinforcing bar outside of the affected zone and show visible necking.
2. For "Necking (Option II)," the largest measured strain must be at least:
   2.1. Six percent for no. 11 and larger bars
   2.2. Nine percent for no. 10 and smaller bars

Replace the 2nd and 3rd paragraphs of section 52-6.03B with:

01-18-13

Do not splice the following by lapping:

1. No. 14 bars
2. No. 18 bars
3. Hoops
4. Reinforcing bars where you cannot provide a minimum clear distance of 2 inches between the splice and the nearest adjacent bar

^^

53 SHOTCRETE

07-19-13

Replace the 2nd and 3rd paragraphs of section 53-2.01D(1) with:

07-19-13

Obtain and test all cores for compressive strength under ASTM C 42/C 42M at an authorized laboratory. The compressive strength is the average strength of the 3 cores.

Shotcrete must have a minimum compressive strength of 3,600 psi, unless otherwise described. The shotcrete must attain the minimum compressive strength at 28 days, except 42 days are allowed for shotcrete with a described minimum compressive strength greater than 3,600 psi.

^^

54 WATERPROOFING

04-18-14

Add between "be" and "3/8 inch" in the 3rd paragraph of section 54-4.02C:

04-20-12

at least

04-18-14

Delete the 3rd paragraph of section 54-5.01A.

04-18-14

Delete "and HMA" in the 2nd paragraph of section 54-5.03.

Replace the last paragraph of section 54-5.03 with:

04-18-14

Do not allow traffic on the seal until HMA is placed over it.

Add to section 54:

07-19-13

54-7 SILANE WATERPROOFING TREATMENT

Reserved

54-8–54-10 RESERVED

^^

55 STEEL STRUCTURES

07-19-13

07-19-13

Delete the 3rd paragraph in section 55-1.01C(1).

Replace the 3rd sentence of the 4th paragraph in section 55-1.01C(1) with:

07-19-13

For ASTM F 1554 anchor bolts, include chemical composition and carbon equivalence for each heat of steel.

Add to section 55-1.01C(1):

07-19-13

For HS connections, submit a record of which lots are used in each joint as an informational submittal.

Replace "sets" at each occurrence in the 1st paragraph of section 55-1.01C(2) with:

04-19-13

copies

Replace the list in the 2nd paragraph of section 55-1.01C(2) with:

07-19-13

1. Sequence of shop and field assembly and erection. For continuous members, include proposed steel erection procedures with calculations that show girder capacity and geometry will be correct.
2. Welding sequences and procedures.
3. Layout drawing of the entire structure with locations of butt welded splices.
4. Locations of temporary supports and welds.
5. Vertical alignment of girders at each stage of erection.
6. Match-marking diagrams.
7. Details for connections not shown or dimensioned on the plans.
8. Details of allowed options incorporated in the work.
9. Direction of rolling of plates where orientation is specified.
10. Distortion control plan.
11. Dimensional tolerances. Include measures for controlling accumulated error to meet overall tolerances.
12. Material specification and grade listed on the bill of materials.
13. Identification of tension members and fracture critical members.
14. Proposed deviations from plans, specifications, or previously submitted shop drawings.
15. Contract plan sheet references for details.

Replace items 2 and 3 in the list in the 1st paragraph of section 55-1.01C(3) with:

07-19-13

2. Tension flanges and webs of horizontally curved girders
3. Hanger plates

Replace the 2nd paragraph of section 55-1.01C(3) with:

07-19-13

Furnish plates, shapes, or bars with extra length to provide for removal of check samples.

07-19-13

Delete the 1st and 2nd sentences in the 3rd paragraph of section 55-1.01C(3).

Replace the 4th paragraph of section 55-1.01C(3) with:

07-19-13

Remove material for test samples in the Engineer's presence. Test samples for plates over 24 inches wide must be 10 by 12 inches with the long dimension transverse to the direction of rolling. Test samples for other products must be 12 inches long taken in the direction of rolling with a width equal to the product width.

Replace the 1st sentence of the 6th paragraph in section 55-1.01C(3) with:

07-19-13

Results of check testing are delivered to you within 20 days of receipt of samples at METS.

07-19-13

Delete the 2nd paragraph of section 55-1.01D(1).

Replace the 2nd sentence of the 4th paragraph in section 55-1.01D(1) with:

07-19-13

The calibration must be performed by an authorized repair and calibration center approved by the tool manufacturer.

Add to section 55-1.01D(1):

07-19-13

For bolts installed as snug tight, rotational capacity testing and installation tension testing are not required.

In addition to NDT requirements in AWS D1.5, ultrasonically test 25 percent of all main member tension butt welds in material over 1/2 inch thick.

Perform NDT on 100 percent of each pin as follows:

1. MT under ASTM A 788, S 18, with no linear indication allowed exceeding 3 mm
2. UT under ASTM A 788, S 20, level S and level DA in two perpendicular directions

The Engineer determines the location of all NDT testing for welding.

07-19-13

Delete the 2nd paragraph of section 55-1.01D(3)(a).

Replace section 55-1.01D(4)(b) with:

07-19-13

Perform rotational capacity testing on each rotational capacity lot under section 55-1.01D(3)(b) at the job site before installation.

Replace the 1st sentence of the 2nd paragraph in section 55-1.01D(4)(c) with:

07-19-13

Test 3 representative HS fastener assemblies under section 8 of *Specification for Structural Joints Using High-Strength Bolts* of the RCSC.

Replace the 1st paragraph in section 55-1.01D(4)(d) with:

07-19-13

Perform fastener tension testing to verify minimum tension in HS bolted connections no later than 48 hours after all fasteners in a connection have been tensioned.

Replace the 3rd paragraph in section 55-1.01D(4)(d) with:

07-19-13

Test 10 percent of each type of fastener assembly in each HS bolted connection for minimum tension using the procedure described in section 10 of *Specification for Structural Joints Using High-Strength Bolts* of the RCSC. Check at least 2 assemblies per connection. For short bolts, determine the inspection torque using steps 1 through 7 of "Arbitration of Disputes, Torque Method-Short Bolts" in *Structural Bolting Handbook* of the Steel Structures Technology Center.

Replace the 1st table in the 1st paragraph of section 55-1.02A(1) with:

07-19-13

Structural Steel

Material	Specification
Carbon steel	ASTM A 709/A 709M, Grade 36 or {ASTM A36/A36M}[a]
HS low alloy columbium vanadium steel	ASTM A 709/A 709M, Grade 50 or {ASTM A 992/A 992M or ASTM A 572/A 572M, Grade 50}[a]
HS low alloy structural steel	ASTM A 709/A 709M, Grade 50W or Grade HPS 50W, or {ASTM A 588/A 588M}[a]
HS low alloy structural steel plate	ASTM A 709/A 709M, Grade HPS 70W
High-yield strength quenched and tempered alloy steel plate suitable for welding	ASTM A 709/A 709M, Grade 100, Grade 100W, or Grade HPS 100W, or {ASTM A 514/A 514M}[a]

[a]Grades you may substitute for the equivalent ASTM A 709 steel subject to the modifications and additions specified and to the requirements of ASTM A 709.

Replace the 2nd table in the 1st paragraph of section 55-1.02A(1) with:

07-19-13

Fasteners

Material	Specification
Steel fastener components for general applications:	
Bolts and studs	ASTM A 307
Anchor bolts	ASTM F 1554[a]
HS bolts and studs	ASTM A 449, Type 1[a]
HS threaded rods	ASTM A 449, Type 1 [a]
HS nonheaded anchor bolts	ASTM F 1554, Grade 105, Class 2A[a]
Nuts	ASTM A 563, including appendix X1[b]
Washers	ASTM F 844
Hardened Washers	ASTM F 436, Type 1, including S1 supplementary requirements
Components of HS steel fastener assemblies for use in structural steel joints:	
Bolts	ASTM A 325, Type 1
Tension control bolts	ASTM F 1852, Type 1
Nuts	ASTM A 563, including appendix X1[b]
Hardened washers	ASTM F 436, Type 1, Circular, including S1 supplementary requirements
Direct tension indicators	ASTM F 959, Type 325, zinc-coated

[a]Use hardened washers.
[b]Zinc-coated nuts tightened beyond snug or wrench tight must be furnished with a dry lubricant complying with supplementary requirement S2 in ASTM A 563.

Replace the 3rd table in the 1st paragraph of section 55-1.02A(1) with:

07-19-13

Other Materials

Material	Specification
Carbon steel for forgings, pins, and rollers	ASTM A 668/A 668M, Class D
Alloy steel for forgings	ASTM A 668/A 668M, Class G
Pin nuts	ASTM A 709/A 709M or ASTM A 563, including appendix X1[a]
Carbon-steel castings	ASTM A 27/A 27M, Grade 65-35, Class 1
Malleable iron castings	ASTM A 47/A 47M, Grade 32510
Gray iron castings	ASTM A 48, Class 30B
Carbon steel structural tubing	ASTM A 500/A 500M, Grade B, ASTM A 501, ASTM A 847/A 847M, or ASTM A 1085
Steel pipe[b]	ASTM A 53, Type E or S, Grade B; ASTM A 106, Grade B; or ASTM A 139, Grade B
Stud connectors	ASTM A 108

[a]Zinc-coated nuts tightened beyond snug or wrench tight must be furnished with a dry lubricant complying with supplementary requirement S2 in ASTM A 563.
[b]Hydrostatic testing will not apply.

Replace the table in the 1st paragraph in section 55-1.02A(2) with:

07-19-13

Material complying with ASTM A 709/A 709M	CVN impact value (ft-lb at temperature)
Grade 36	15 at 40 ºF
Grade 50[a] (Thickness up to 2 inches)	15 at 40 ºF
Grade 50W[a] (Thickness up to 2 inches)	15 at 40 ºF
Grade 50[a] (Thickness over 2 inches up to 4 inches)	20 at 40 ºF
Grade 50W[a] (Thickness over 2 inches up to 4 inches)	20 at 40 ºF
Grade HPS 50W[a] (Thickness up to 4 inches)	20 at 10 ºF
Grade HPS 70W (Thickness up to 4 inches)	25 at -10 ºF
Grade 100 (Thickness of 2-1/2 inches or less)	25 at 0 ºF
Grade 100W (Thickness over 2-1/2 inches up to 4 inches)	35 at 0 ºF
Grade HPS 100W (Thickness of 2-1/2 inches or less)	25 at -30 ºF
Grade HPS 100W (Thickness over 2-1/2 inches up to 4 inches)	35 at -30 ºF

[a]If the material yield strength is more than 65,000 psi, reduce the temperature for the CVN impact value 15 degrees F for each increment of 10,000 psi above 65,000 psi.

Replace the 1st sentence of the 1st paragraph in section 55-1.02A(5) with:

07-19-13

Steel, gray iron, and malleable iron castings must have continuous fillets cast in place in reentrant angles.

07-19-13

Delete the 3rd and 4th sentences in the 2nd paragraph in section 55-1.02A(5).

Replace the 1st paragraph of section 55-1.02B(1) with:

07-19-13

Section 55-1.02B(1) applies to work performed at the source and at the job site.

Replace the 4th paragraph in section 55-1.02B(1) with:

07-19-13

Ends of girder stiffeners shown as tight-fit must bear on the girder flange with at least point bearing. Local clearances between the end of the stiffener and the girder flange must be at most 1/16 inch.

Replace the 1st sentence of the 5th paragraph in section 55-1.02B(1) with:

07-19-13

Fabricate floor beams, stringers, and girders having end connection angles to exact length back to back of connection angles.

Add to the 7th paragraph in section 55-1.02B(1):

07-19-13

Use low-stress stamps for fracture critical members and tension members.

Replace the 2nd sentence of the 9th paragraph in section 55-1.02B(1) with:

07-19-13

Slightly round edges and sharp corners, including edges marred, cut, or roughened during handling or erection.

Replace the 3rd paragraph in section 55-1.02B(2) with:

07-19-13

Instead of machining, you may heat straighten steel not in contact with other metal bearing surfaces if the above tolerances are met.

Replace item 2 in the list in the 1st paragraph of section 55-1.02B(3) with:

07-19-13

2. Radius of bend measured to the concave face must comply with *Manual of Steel Construction* of the AISC

Replace the 1st sentence of the 2nd paragraph in section 55-1.02B(3) with:

07-19-13

Plates to be bent to a smaller radius than specified in *Manual of Steel Construction* of the AISC must be bent hot.

Replace the introductory clause of the 2nd paragraph of section 55-1.02B(4) with:

07-19-13

Threads for pin ends and pin nuts 1-1/2 inches or more in diameter must comply with the following:

Replace the 3rd paragraph in section 55-1.02B(5) with:

07-19-13

Holes for pins must be:

1. True to the diameter specified.

2. At right angles to the member axis.
3. Parallel with each other except for pins where nonparallel holes are required.
4. Smooth and straight with the final surface produced by a finishing cut.

Replace the 1st paragraph in section 55-1.02B(6)(c) with:

07-19-13

Bolted connections using HS fastener assemblies must comply with *Specification for Structural Joints Using High-Strength Bolts* of the RCSC.

Replace the 7th paragraph in section 55-1.02B(6)(c) with:

07-19-13

For all bolts, thread stickout after tensioning must be at least flush with the outer nut face. At least 3 full threads must be located within the grip of the connection.

07-19-13

Delete the 3rd paragraph in section 55-1.02B(7)(a).

Add to section 55-1.02B(7)(a):

07-19-13

For welds indicated to be subject to tensile forces that are to receive RT, grind smooth and flush on both sides of welds before testing.

For groove weld surface profiles that interfere with NDT procedures, grind welds smooth and blend with the adjacent material.

For fillet weld surface profiles that interfere with NDT procedures, grind welds and blend the toes smoothly with the adjacent base metal.

Add to section 55-1.02B(7):

07-19-13

55-1.02B(7)(c) Steel Pedestrian Bridges

Reserved

Replace the 1st paragraph in section 55-1.02B(9) with:

07-19-13

Prepare and paint contact surfaces of HS bolted connections before assembly. Thoroughly clean all other surfaces of metal in contact to bare metal before assembly. Remove all rust, mill scale, and foreign material.

Replace the 1st sentence of the 4th paragraph in section 55-1.02B(9) with:

07-19-13

Preassemble truss work in lengths of at least 3 abutting panels and adjust members for line and camber.

Replace the 1st sentence of the 5th paragraph in section 55-1.02B(9) with:

07-19-13

Preassemble bolted splice joints for plate girders in lengths of at least 3 abutting sections and adjust abutting sections for line and camber.

Replace the 6th paragraph in section 55-1.02B(9) with:

07-19-13

Preassemble prepared splice joints for welded girders with abutting members and adjust for line and camber.

Replace the paragraphs in section 55-1.03C(1) with:

07-19-13

Reserved

Replace the 3rd sentence of the 1st paragraph in section 55-1.03C(2) with:

07-19-13

Attain full bearing on the concrete under bearing assemblies.

Replace the 3rd paragraph in section 55-1.03C(2) with:

07-19-13

During welding, protect bearings and bearing surfaces using authorized methods.

Replace section 55-1.03C(4) with:

07-19-13

55-1.03C(4) Continuous Members

Unless otherwise shown, structural steel girders are designed for continuity in supporting girder dead load. If erection procedures provide girder continuity for dead load, preassemble members with field joints in a no-load condition in a horizontal or an upright condition.

You may erect structural steel girders such that dead load girder continuity is not provided. If erection procedures do not provide girder continuity for dead load:

1. You may increase cross-sectional areas or change grades of steel to provide the specified capacity if authorized.
2. After erection, the erected structure must have a load-carrying capacity at least equal to the structure shown.

^^

56 SIGNS

07-19-13

Replace the 4th paragraph of section 56-3.01A with:

07-19-13

The types of sign structures include:

1. Truss
2. Bridge mounted
3. Tubular

Replace "sets" in the 1st paragraph of section 56-3.01C(2) with:

04-19-13

copies

07-20-12

Delete the 7th paragraph of section 56-3.02K(2).

Replace the 1st paragraph of section 56-3.02M(1) with:

07-19-13

Galvanize all ferrous metal parts of the following sign structure types:

1. Truss
2. Bridge mounted
3. Tubular

Add between the 1st and 2nd paragraphs of section 56-3.02M(1):

04-19-13

Clean and paint all ferrous metal parts of tubular sign structures after galvanizing, including the areas to be covered by sign panels. Do not paint sign structures other than tubular type unless specified in the special provisions.

Replace the headings and paragraphs in section 56-3.02M(3) with:

04-19-13

Where specified, clean and paint sign structures under section 59-5.

^^

57 WOOD AND PLASTIC LUMBER STRUCTURES

04-19-13

Replace "51-2.01C(3)" in the 1st paragraph of section 57-2.01C(3)(a) with:

10-19-12

57-2.01C(3)

Replace "sets" at each occurrence in the 1st paragraph of section 57-3.01C with:

04-19-13

copies

^^

58 SOUND WALLS

04-19-13

10-19-12

Delete the 3rd paragraph of section 58-1.01.

Replace the 1st paragraph of section 58-2.01D(5)(a) with:

08-05-11

You must employ a special inspector and an authorized laboratory to perform Level 1 inspections and structural tests of masonry to verify the masonry construction complies with section 1704, "Special Inspections," and section 2105, "Quality Assurance," of the 2007 CBC.

10-19-12

Delete the 1st paragraph of section 58-2.02F.

Replace "sets" at each occurrence in the 1st paragraph of section 58-4.01C with:

04-19-13

copies

^^

59 PAINTING

11-15-13

Replace "SSPC-SP 10" at each occurrence in section 59 with:

10-19-12

SSPC-SP 10/NACE no. 2

Replace "SSPC-SP 6" at each occurrence in section 59 with:

10-19-12

SSPC-SP 6/NACE no. 3

Replace "SSPC-CS 23.00" at each occurrence in section 59 with:

10-19-12

SSPC-CS 23.00/AWS C 2.23M/NACE no. 12

Replace "*Specification for Structural Joints Using ASTM A325 or A 490 Bolts*" in the 1st paragraph of section 59-2.01C(1) with:

07-19-13

Specification for Structural Joints Using High-Strength Bolts

Replace "SSPC-QP 3 or AISC SPE, Certification P-1 Enclosed" in item 3 in the list in the 1st paragraph of section 59-2.01D(1) with:

10-19-12

AISC-420-10/SSPC-QP 3 (Enclosed Shop)

Replace "*Specification for Structural Joints Using ASTM A325 or A 490 Bolts*" in the 1st paragraph of section 59-2.02 with:

07-19-13

Specification for Structural Joints Using High-Strength Bolts

Replace the paragraphs in section 59-2.03A with:

10-19-12

Clean and paint all exposed structural steel and other metal surfaces.

You must provide enclosures for cleaning and painting structural steel. Cleaning and painting of new structural steel must be performed in an Enclosed Shop as defined in AISC-420-10/SSPC-QP 3. Maintain atmospheric conditions inside enclosures within specified limits.

Except for blast cleaning within closed buildings, perform blast cleaning and painting during daylight hours.

Add to section 59-2.03B:

07-19-13

59-2.03B(3) Containment Systems

59-2.03B(3)(a) General

Construct containment systems when disturbing existing paint systems during bridge rehabilitation.

The containment system must be one of the following:

1. Ventilated containment system
2. Vacuum-shrouded surface preparation equipment and drapes and ground covers
3. Equivalent containment system if authorized

The containment system must contain all water, resulting debris, and visible dust produced when the existing paint system is disturbed.

Properly maintain the containment system while work is in progress and do not change the containment system unless authorized.

Containment systems over railroad property must provide the minimum clearances as specified in section 5-1.20C for the passage of railroad traffic.

59-2.03B(3)(b) Ventilated Containment Systems

59-2.03B(3)(b)(i) General

If flexible framing is used, support and fasten it to (1) prevent the escape of abrasive and blast materials due to whipping from traffic or wind and (2) maintain clearances.

If the wind speed reaches 50 mph or greater, relieve the wind pressure on the containment system using an authorized method.

59-2.03B(3)(b)(ii) Design Criteria

Scaffolding or supports for the ventilated containment system must not extend below the vertical clearance level nor to the ground line at locations within the roadbed.

For truss-type bridges, all connections of the ventilated containment system to the existing structure must be made through the deck, girder, stringer, or floor beam system. No connections are allowed that will cause bending stresses in a truss member.

The ventilated containment system must comply with section 7-1.02K(6)(e).

The minimum total design load for the ventilated containment system must consist of the sum of the dead and live vertical loads.

Dead and live loads are as follows:

1. Dead load must consist of the actual load of the ventilated containment system
2. Live loads for bridges with only spot blast cleaning work must consist of:
   - 2.1. Uniform load of at least 25 psf applied over the supported area
   - 2.2. Moving concentrated load of 1000 lb to produce maximum stress in the main supporting elements of the ventilated containment system
3. Live loads for bridges with 100 percent blast cleaning to bare metal must consist of:
   - 3.1. Uniform load of at least 45 psf, which includes 20 psf of sand load, applied over the supported area
   - 3.2. Moving concentrated load of 1000 lb to produce maximum stress in the main supporting elements of the ventilated containment system

Assumed horizontal loads do not need to be included in the design of the ventilated containment system.

Maximum allowable stresses must comply with section 48-2.01D(3)(c).

59-2.03B(3)(b)(iii) Ventilation

The ventilation system in the ventilated containment system must be of the forced input airflow type with fans or blowers.

Negative air pressure must be employed within the ventilated containment system and will be verified by visual methods by observing the concave nature of the ventilated containment system while taking into account wind effects or by using smoke or other visible means to observe airflow. The input airflow must be properly balanced with the exhaust capacity throughout the range of operations.

The exhaust airflow of the ventilation system in the ventilated containment system must be forced into wet or dry dust collectors or bag houses.

Replace item 1 in the list in the 2nd paragraph of section 59-2.03C(1) with:

10-19-12

1. Apply a stripe coat of undercoat paint on all edges, corners, seams, crevices, interior angles, junctions of joining members, weld lines, and similar surface irregularities. The stripe coat must completely hide the surface being covered. If spot blast cleaning portions of the bridge, apply the stripe coat of undercoat paint before each undercoat and follow with the undercoat as soon as practical. If removing all existing paint from the bridge, apply the undercoat first as soon as practical and follow with the stripe coat of undercoat paint for each undercoat.

Replace the heading of section 59-2.03C(2) with:

04-19-13

Zinc Coating System

Add to section 59-2.03C(2)(a):

04-19-13

Coatings for new structural steel and connections between new and existing structural steel must comply with the requirements shown in the following table:

Zinc Coating System

Description	Coating	Dry film thickness (mils)
All new surfaces:		
Undercoat	Inorganic zinc primer, AASHTO M 300 Type I or II	4–8
Finish coat[a]	Exterior grade latex[b], 2 coats	2 minimum each coat, 4–8 total
Total thickness, all coats		8–14
Connections to existing structural steel:[c]		
Undercoat	Inorganic zinc primer, AASHTO M 300 Type I or II	4–8
Finish coat[a]	Exterior grade latex[b], 2 coats	2 minimum each coat, 4–8 total
Total thickness, all coats		8–14

[a]If no finish coats are described, a final coat of inorganic zinc primer is required.
[b]Exterior grade latex must comply with section 91-2.02 unless otherwise specified.
[c]Includes the following locations:

1. New and existing contact surfaces
2. Existing member surfaces under new HS bolt heads, nuts, or washers
3. Bare surfaces of existing steel after trimming, cutting, drilling, or reaming
4. Areas within a 4-inch radius from the point of application of heat for welding or flame cutting

Replace "*Specification for Structural Joints Using ASTM A325 or A 490 Bolts*" in the 7th paragraph of section 59-2.03C(2)(b)(i) with:

07-19-13

Specification for Structural Joints Using High-Strength Bolts

Add to section 59-2.03C:

04-19-13

59-2.03C(3) Moisture-Cured Polyurethane Coating System

Reserved

59-2.03C(4) State Specification Paint Waterborne Coating System

59-2.03C(4)(a) General

The State Specification PWB coating system for existing structural steel must comply with the requirements shown in the following table:

State Specification PWB Coating System

Surface	Description	State Specification PWB Coating	Dry film thickness (mils)
Surfaces cleaned to bare metal[a]:	1st undercoat	145	2–3
	2nd undercoat	146	2–3
	1st finish coat	171	1.5–3
	2nd finish coat	172	1.5–3
	Total thickness, all coats	--	7–12
Existing painted surfaces to be topcoated:	Undercoat	146	2–3
	1st finish coat	171	1.5–3
	2nd finish coat	172	1.5–3
	Total thickness, new coats	--	5–9

[a]Includes locations of spot blast cleaning

59-2.03C(4)(b) Finish Coats

11-15-13

Reserved

Add to section 59-5.01:

04-19-13

Where specified, prepare and paint sign structures under sections 59-2 and 59-3.

Instead of submitting proof of the certification complying with SSPC-QP 1, you may submit documentation with the painting quality work plan showing compliance with the requirements in section 3 of SSPC-QP 1.

Instead of submitting proof of the certification complying with SSPC-QP 2, you may submit documentation with the painting quality work plan showing compliance with the requirements in sections 4.2 through 4.4 of SSPC-QP 2, Category A.

Instead of submitting proof of the certification complying with AISC-420-10/SSPC-QP 3 (Enclosed Shop), you may submit documentation with the painting quality work plan showing compliance with the requirements in sections 5 through 18 of AISC-420-10/SSPC-QP3.

Replace the paragraphs of section 59-5.03 with:

04-19-13

59-5.03A General

You may prepare and paint sign structures before or after erection. After erection, repair damaged paint to the satisfaction of the Engineer.

The total dry film thickness of finish coats on contact surfaces of galvanized HS bolted connections (1) must be from 1 to 4 mils and (2) may be applied in 1 application.

59-5.03B Undercoating of Ungalvanized Surfaces

Blast-cleaned surfaces must receive a single undercoat consisting of an inorganic zinc coating as specified in AASHTO M 300, Type I or Type II, except:

1. The first 2 sentences of section 5.6 do not apply
2. Section 5.6.1 does not apply

If you propose to use a coating that is not on the Authorized Material List, submit the required documentation specified in section 5.6 of AASHTO M 300. Allow 30 days for the Engineer's review.

59-5.03C Testing of Inorganic Zinc Coating

Perform adhesion and hardness testing no sooner than 72 hours after application of the single undercoat of inorganic zinc coating.

59-5.03D Finish Coating

The exposed area of inorganic zinc coating must receive a minimum of 2 finish coats of exterior grade latex paint.

The 1st finish coat color must match no. 24558 of FED-STD-595. The 2nd finish coat color must match no. 24491 of FED-STD-595. The total dry film thickness of the applications of the 2nd finish coat must be not less than 2 mils.

Replace section 59-7 with:

07-19-13

59-7 STAINING CONCRETE AND SHOTCRETE

59-7.01 GENERAL

59-7.01A General

59-7.01A(1) Summary

Section 59-7.01 includes specifications for preparing and staining concrete and shotcrete surfaces using an acid stain.

59-7.01A(2) Definitions

Reserved

59-7.01A(3) Submittals

Submit stain manufacturer's product data and application instructions at least 7 days before starting staining activities.

59-7.01A(4) Quality Control and Assurance

Reserved

59-7.01B Materials

59-7.01B(1) General

Reserved

59-7.01B(2) Stain

Stain must:

1. Be a water-based solution of inorganic metallic salts

2. Contain dilute acid that penetrates and etches the concrete or shotcrete surface
3. Be a commercial quality product designed specifically for exterior applications
4. Produce abrasion-resistant color deposits

59-7.01B(3) Sealer

Reserved

59-7.01B(4) Joint Sealing Compound

Reserved

59-7.01C Construction

59-7.01C(1) General

Seal joints between concrete and shotcrete surfaces to be stained and adjacent metal with joint sealing compound before applying the stain.

Test surfaces for acceptance of the stain before applying the stain. Clean surfaces that resist accepting the stain and retest until passing.

Apply the stain under the manufacturer's instructions.

Before staining, the concrete or shotcrete surfaces must be:

1. At least 28 days old
2. Prepared under SSPC-SP 13/NACE no. 6
3. Thoroughly dry

Apply the stain uniformly to avoid excessive rundown. Work the stain into the concrete using a nylon bristle brush in a circular motion.

After the last coat of stain has dried, rinse stained surfaces with water and wet scrub with a stiff bristle nylon brush until the rinse water runs clear. Collect all rinse water.

Protect adjacent surfaces during staining.

Thoroughly cure each application of the stain and correct skips, holidays, thin areas, or other deficiencies before the next application.

Drips, puddles, or other irregularities must be worked into the concrete or shotcrete surface.

59-7.01C(2) Test Panel

For staining concrete or shotcrete, stain a test panel complying with section 51-1.01D(3).

For staining sculpted shotcrete, stain a test panel complying with section 53-3.01D(3).

The test panel must be:

1. Stained using the same personnel, materials, equipment and methods to be used in the work
2. Accessible for viewing
3. Displayed in an upright position near the work
4. Authorized for staining before starting the staining work

If ordered, construct additional test panels until a satisfactory color is attained.

The Engineer uses the authorized stained test panel to determine the acceptability of the stained surface.

Dispose of the test panels after the staining work is complete and authorized. Notify the Engineer before disposing of the test panels.

59-7.01D Payment

Not Used

59-7.02 SCULPTED SHOTCRETE AND TEXTURED CONCRETE

59-7.02A General

59-7.02A(1) Summary

Section 59-7.02 includes specifications for preparing and staining sculpted shotcrete and textured concrete surfaces using an acid stain.

59-7.02A(2) Definitions

Reserved

59-7.02A(3) Submittals

59-7.02A(3)(a) General

Reserved

59-7.02A(3)(b) Experience Qualifications

Submit the following documentation of the staining subcontractor's experience at least 10 days before the preconstruction meeting:

1. Summary of the staining subcontractor's experience that demonstrates compliance with section 59-7.02A(4)(b).
2. List of at least 3 projects completed in the last 5 years that demonstrate the staining subcontractor's ability to stain textured concrete or sculpted shotcrete surfaces similar to the textured concrete or sculpted shotcrete for this project. For each project include:
   - 2.1. Project description
   - 2.2. Name and phone number of the owner
   - 2.3. Staining completion date
   - 2.4. Color photos of the completed stained surface

59-7.02A(3)(c) Installation Plan

Submit an installation plan at least 10 days before the preconstruction meeting. The installation plan must include details for preparing and staining the textured concrete or sculpted shotcrete to achieve the required color, including:

1. Number of applications that will be used to apply the stain
2. For each application of the stain, a description of:
   - 2.1. Manufacturer, color, finish, and percentage strength mixture of the stain that will be applied
   - 2.2. Methods and tools that will be used to apply the stain
3. Methods for protecting adjacent surfaces during staining
4. Rinse water collection plan for containing all liquid, effluent, and residue resulting from preparing and staining textured concrete or sculpted shotcrete

59-7.02A(4) Quality Control and Assurance

59-7.02A(4)(a) General

Reserved

59-7.02A(4)(b) Contractor Qualifications

The staining subcontractor must:

1. Have experience in staining textured concrete or sculpted shotcrete surfaces to simulate the appearance of natural rock formations or stone masonry
2. Have successfully completed at least 3 projects in the past 5 years involving staining of concrete or sculpted shotcrete surfaces similar to the textured concrete or sculpted shotcrete for this project

59-7.02A(4)(c) Preconstruction Meeting

Before starting staining activities, conduct a meeting to discuss the installation plan. Meeting attendees must include the Engineer and all staining subcontractors.

59-7.02B Materials

Not Used

59-7.02C Construction

Not Used

59-7.02D Payment

Prepare and stain concrete and prepare and stain shotcrete are measured by the area of the vertical or sloped wall face stained.

Replace "solider" in the 5th paragraph of section 59-9.03 with:

04-19-13

soldier

Replace section 59-11 with:

07-19-13

59-11 STAINING GALVANIZED SURFACES

Reserved

Replace section 59-12 with:

07-19-13

59-12 ROCK STAINING

59-12.01 GENERAL

59-12.01A Summary

Section 59-12 includes specifications for applying stain to the exterior surface of landscape boulders, native rock that has been damaged or scarred, rock energy dissipaters, rock slope protection and gabion surfaces.

59-12.01B Submittals

Submit the following:

1. Work plan showing methods to control overspray and spillage, and to protect adjacent surfaces
2. Product data including the manufacturer's product sheet and the instructions for the application of the stain

59-12.01C Quality Control and Assurance

59-12.01C(1) General

Reserved

59-12.01C(2) Test Plot

Apply the stain to a test plot rock area of at least 3 by 3 feet at a location designated by the Engineer. Notify the Engineer at least 7 days before staining the test plot. Prepare and stain the test plot with the same materials, tools, equipment, and methods to be used in staining the final surfaces. Separate test plots are required for staining rock slope protection and native rock.

If ordered, prepare additional test plots. Additional test plots are change order work.

Obtain authorization of the test plot before starting the staining work. Use the authorized test plot as the standard for comparison in determining acceptability of staining. If the test plot is not incorporated into the work and the Engineer determines it is no longer needed, dispose of it.

59-12.02 MATERIALS

59-12.02A General

Reserved

59-12.02B Stain

Reserved

59-12.03 CONSTRUCTION

59-12.03A General

Reserved

59-12.03B Preparation

Before applying the stain:

1. Identify and obtain authorization for the areas to be stained
2. Remove oils, dirt, and other contaminants from the surfaces to be stained
3. Dry all surfaces to be stained

59-12.03C Application

After the areas to be stained have been identified, prepared, and the test plot authorized, stain the exposed surfaces under the manufacturer's instructions to achieve a color consistent with, or as close as possible to, the authorized test area color.

Control overspray and protect adjacent surfaces.

Keep stained surfaces dry for at least 20 days following the application of the stain.

59-12.04 PAYMENT

Rock stain areas are measured along the slope face.

^^

DIVISION VII DRAINAGE

62 ALTERNATIVE CULVERTS

07-19-13

Add to the end of section 62-1.01:

10-19-12

Alternative culverts include concrete collars and concrete tees and reinforcement for connecting new pipe to existing or new facilities. Concrete for the collars and tees must be minor concrete. Reinforcement for the concrete collars or tee connections must comply with section 52.

Add to section 62:

07-19-13

62-5 TEMPORARY SLOTTED PIPE

Reserved

62-6–62-10 RESERVED

^^

64 PLASTIC PIPE

07-19-13

Replace the 2nd paragraph of section 64-1.01A with:

10-19-12

Plastic pipe includes all necessary elbows, wyes, tees, other branches, fittings, coupling systems, concrete collars or tees, and reinforcement.

Replace item 1 in the list in the 3rd paragraph of section 64-1.02E with:

07-19-13

1. If watertight joints are shown, use Type S corrugated polyethylene pipe with gaskets. If watertight joints are not shown, use gasketed joints when specified. Gaskets for Type C corrugated polyethylene pipe must be installed on each side of the joint. Gaskets must comply with ASTM F477 and be factory-installed.

^^

65 CONCRETE PIPE

07-19-13

Replace the 2nd paragraph of section 65-1.01 with:

10-19-12

Concrete pipe includes all necessary elbows, wyes, tees, other branches, concrete collars or tees, and reinforcement.

Replace section 65-2.02D with:

07-19-13

65-2.02D Reserved

^^

68 SUBSURFACE DRAINS

04-18-14

Replace the 5th paragraph of section 68-4.02E with:

04-18-14

HMA for backfilling trenches must comply with HMA for miscellaneous areas as specified in section 39.

^^

70 MISCELLANEOUS DRAINAGE FACILITIES

07-19-13

Replace section 70-5.02A(2) with:

01-20-12

70-5.02A(2) Plastic Flared End Sections

Plastic flared end sections must comply with ASTM D 3350.

Replace "40-1.03N" in item 2.4 of the 1st paragraph of section 70-5.06C with:

07-19-13

40-1.03K

Replace the 2nd, 3rd, and 4th paragraphs of section 70-7.02B with:

01-18-13

Before shipping, the exterior surfaces of the casing must be cleaned, primed, and coated to comply with ANSI/AWWA C213 or ANSI/AWWA C214.

Wrapping tape for repairing damaged coating and wrapping field joints and fittings must be a pressure-sensitive PVC or polyethylene tape with a minimum thickness of 50 mils, 2 inches wide.

Add to section 70-7.03:

01-18-13

Repair damaged coating on the casing and wrap field joints and fittings with wrapping tape as follows:

1. Before wrapping, thoroughly clean and prime the pipe casing, joints, and fittings under the tape manufacturer's instructions.
2. Wrap the tape tightly with 1/2 uniform lap, free from wrinkles and voids to provide not less than a 100-mil thickness.
3. Wrapping at joints must extend at least 6 inches over adjacent pipe casing coverings. Apply tension such that the tape will conform closely to contours of the joint.

Add to section 70:

07-19-13

70-8–70-15 RESERVED

^^^

DIVISION VIII MISCELLANEOUS CONSTRUCTION

72 SLOPE PROTECTION

11-15-13

Replace the table in the 3rd paragraph of section 72-2.02A with:

11-15-13

Rock Material Properties

Property	California Test	Value
Apparent specific gravity	206	2.5 minimum
Absorption	206	4.2% maximum
Durability Index	229	52 minimum

Notes:
Durability absorption ratio (DAR) = course durability index/(% absorption + 1)
If the DAR is greater than 10, the absorption may exceed 4.2%
If the DAR is greater than 24, the durability index may be less than 52

Replace the row under "Class" in the table in the 1st paragraph of section 72-3.02B with:

01-20-12

1/2 T	1/4 T	Light	Facing	Cobble

Replace the table in the 2nd paragraph of section 72-3.02B with:

11-15-13

Rock Material Properties

Property	California Test	Value
Apparent specific gravity	206	2.5 minimum
Absorption	206	4.2% maximum
Durability index	229	52 minimum

Notes:
Durability absorption ratio (DAR) = course durability index/(% absorption + 1)
If the DAR is greater than 10, the absorption may exceed 4.2%
If the DAR is greater than 24, the durability index may be less than 52

Replace the row under "Rock class" in the table in the 2nd paragraph of section 72-3.03E with:

01-20-12

1/2 T	1/4 T	Light	Facing	Cobble

07-19-13

Delete the 5th and 6th paragraphs of section 72-11.01B.

Add to section 72-11.01B:

01-18-13

Expanded polystyrene and premolded expansion joint filler must comply with section 51-2.

07-19-13

Delete the 2nd paragraph of section 72-11.01C(1).

07-19-13

Delete the 7th paragraph of section 72-11.01C(1).

Add between the 7th and 8th paragraphs of section 72-11.01C(1):

07-19-13

Schedule the construction of the slope paving such that the work, including placing and finishing concrete and applying curing compound, is completed on the same day that the work is started.

Replace the 8th paragraph of section 72-11.01C(1) with:

07-19-13

If the Engineer determines that the size of the slope paving is too large to be constructed without an intermediate construction joint, place a joint at an authorized location. Complete a section of concrete bounded by permissible construction joints within the same day.

Replace the 1st paragraph of section 72-11.01C(2) with:

01-18-13

Construct and finish minor concrete slope paving under section 51-1.

Replace the 3rd paragraph of section 72-11.01C(2) with:

07-19-13

After striking-off to grade, hand float the concrete with floats that are at least 4 inches wide and 30 inches long. Broom the entire surface with a stiff-bristled broom to produce a uniform surface. Brooming must be done when the surface is sufficiently set to prevent deep scarring and must be accomplished by drawing the broom down the slope, leaving marks parallel to the slope. The Engineer may order you to apply a fine spray of water to the surface immediately before brooming.

07-19-13

Delete the 3rd paragraph of section 72-11.01D.

^^

73 CONCRETE CURBS AND SIDEWALKS

07-19-13

Replace the paragraph in section 73-1.01A with:

07-19-13

Section 73-1 includes general specifications for constructing minor concrete items including concrete curbs, sidewalks, gutter depressions, driveways, island paving, and curb ramps; for installing detectable warning surfaces and precast parking bumpers; and for texturing and coloring concrete surfaces.

^^

74 PUMPING EQUIPMENT AND CONTROLS

04-19-13

Replace the 1st paragraph of section 74-1.01C(3) with:

04-19-13

Submit at least 5 copies of product data to OSD, Documents Unit. Each copy must be bound together and include an index stating equipment names, manufacturers, and model numbers. Two copies will be returned. Notify the Engineer of the submittal. Include in the notification the date and contents of the submittal.

Replace the 1st sentence of the 1st paragraph in section 74-2.01D(2) with:

01-20-12

Drainage pumps must be factory certified under ANSI/HI 14.6.

^^

75 MISCELLANEOUS METAL

07-19-13

Add between 2nd and 3rd paragraphs of section 75-1.03A:

07-19-13

Fabricate expansion joint armor from steel plates, angles, or other structural shapes. Shape the armor to the section of the concrete deck and match-mark it in the shop. Straighten warped sections of expansion joint armor before placing. Secure the expansion joint armor in the correct position during concrete placement.

Replace "SSPC-QP 3" in the 3rd paragraph of section 75-1.03E(4) with:

10-19-12

AISC-420-10/SSPC-QP3

Replace "metal beam guard railing" in the table in the 1st paragraph of section 75-1.05 with:

07-19-13

guardrail

^^

Replace section 78 with:

07-20-12

78 INCIDENTAL CONSTRUCTION

07-20-12

78-1 GENERAL

Section 78 includes specifications for incidental bid items that are not closely associated with other sections.

78-2–78-50 RESERVED

^^

80 FENCES

07-18-14

Add to section 80-2.02D:

10-19-12

Vertical stays must:

1. Comply with ASTM A641
2. Be 12-1/2 gage
3. Have a Class 3 zinc coating

Replace item 1 in the list in section 80-2.02E with:

10-19-12

Comply with ASTM A 116, Type Z, Grade 60, Class 1

Add after "galvanized wire" in the 1st paragraph of section 80-2.02F:

10-19-12

complying with ASTM A 641

Replace the 3rd and 4th paragraphs of section 80-2.02F with:

10-19-12

Each staple used to fasten barbed wire and wire mesh fabric to wood posts must:

1. Comply with ASTM F 1667
2. Be at least 1-3/4 inches long
3. Be manufactured from 9-gage galvanized wire

Wire ties used to fasten barbed wire and wire mesh to metal posts must be at least 11-gage galvanized wire complying with ASTM F 626. Clips and hog rings used for metal posts must be at least 9-gage galvanized wire complying with ASTM F 626.

Replace the 8th through 14th paragraphs of section 80-2.03 with:

10-19-12

Attach the wire mesh and barbed wire to each post.

Securely fasten tension wires to wood posts. Make a single or double loop around each post at each attachment point and staple the wire to the post. Use wire ties, hog rings, or wire clips to fasten the wires to the metal posts.

Connect each wood brace to its adjacent post with a 3/8 by 4-inch steel dowel. Twist the tension wires until the installation is rigid.

Stretch barbed wire and wire mesh fabric and fasten to each wood or steel end, corner, or gate post. Apply tension according to the manufacturer's instructions using a mechanical stretcher or other device designed for such use. If no tension is specified by the manufacturer, use 250 pounds for the required tension. Evenly distribute the pull over the longitudinal wires in the wire mesh such that no more than 50 percent of the original depth of the tension curves is removed. Do not use a motorized vehicle, truck, or tractor to stretch the wire.

Attach barbed wire and wire mesh fabric to the private-property side of posts. On curved alignments, place the wire mesh and barbed wire on the face of the post against which the normal pull of the wire mesh and wire will be exerted. Terminate the wire mesh and barbed wire at each end, corner, pull, and gate post in the new fence line. Attach wire mesh and barbed wire to each wood or steel end, corner, pull, or gate post by wrapping each horizontal strand around the post and tying it back on itself with at least 4 tightly-wound wraps.

At line posts, fasten the wire mesh to the post at the top and bottom and at intermediate points not exceeding 10 inches apart. Fasten each line of barbed wire to each line post. Use wire ties or clips to fasten the wires to metal posts under the post manufacturer's instructions. Drive staples crosswise with the grain of the wood and pointed slightly downward. Drive staples just short of actual contact with the wires to allow free longitudinal movement of those wires and to prevent damage to the wire's protective coating. Secure all wires to posts to maintain horizontal alignment.

Splices in barbed wire and wire mesh are allowed provided there are no more than 2 splices per 50 feet of fence. Use commercially-available galvanized mechanical wire splices or a wire splice created by tying off wire. Install mechanical wire splices with a tool designed for that purpose under the manufacturer's instructions. Tie off the wire as follows:

1. Carry the ends of each wire 3 inches past the tied-off knot location and wrap around the wire for at least 6 turns in opposite directions.
2. Remove the splice tool and close the space by pulling the end of the wires together.
3. Cut the unused ends of the wire close and neat.

07-18-14

Delete "resisting moment" and its definition in section 80-3.01B.

Add to section 80-3.01B:

07-18-14

posts and braces: Framework that supports the metal fabric for chain link fence. Posts and braces include round and roll-formed cross sections used as line, end, latch, or corner posts and braces.

Add to section 80-3.01C:

07-18-14

Submit a certificate of compliance for posts and braces that includes the information specified in ASTM F1043, section 9.

07-18-14

Delete section 80-3.01D.

Replace the 1st paragraph of section 80-3.02B with:

07-18-14

The base metal for posts and braces must be commercial-quality, weldable steel complying with AASHTO M 181, Type 1, except for the protective coating requirements.

Posts and braces must comply with the strength requirements in ASTM F1043:

1. Group IA, regular grade, for round posts
2. Group II-L for roll-formed posts and braces

07-18-14

Delete the 4th through 8th paragraphs of section 80-3.02B.

Add between "coating" and "unless" in the 1st sentence of section 80-3.02C:

07-18-14

or ASTM F1345, Class 2,

^^^

DIVISION IX TRAFFIC CONTROL FACILITIES

83 RAILINGS AND BARRIERS

07-18-14

Replace "metal beam guard railing" at each occurrence in sections 83-1.02 and 83-1.03 with:

07-19-13

midwest guardrail system

Replace "guard rail" and "guard railing" at each occurrence in sections 83-1.02A and 83-1.02B with:

07-19-13

guardrail

Replace the heading of section 83-1.02B with:

07-19-13

Midwest Guardrail System

Add between "splices at" and "posts" in the 5th paragraph of section 83-1.02B:

07-19-13

midspan between

Replace "Metal rail posts, box spacers, and" in item 1 in the list in the 25th paragraph of section 83-1.02B with:

07-19-13

Metal box spacers and

Replace item 4 in the list in the 25th paragraph of section 83-1.02B with:

07-18-14

4. For the connection of guard railing to new bridge railing or barriers, anchor bolt holes must be drilled in the concrete parapet or formed using metal or PVC sleeves.

07-19-13

Delete items 6 and 7 in the list in the 25th paragraph of section 83-1.02B.

Replace "Type WB" at each occurrence in section 83-1.02B(2) with:

07-19-13

Type WB-31

Replace the heading of section 83-1.02B(3) with:

07-19-13

Temporary Midwest Guardrail System

Replace the 2nd sentence of the 9th paragraph of section 83-1.02D(1) with:

07-18-14

Posts and balusters must be normal to the profile grade. Transverse to the profile grade, railings must be plumb within a tolerance not to exceed 0.02 foot in 10 feet.

Replace "80-2.02" in the 2nd paragraph of section 83-1.02E with:

10-19-12

80-3.02B

Replace the 3rd paragraph of section 83-1.02G(2) with:

07-18-14

Stud bolts must comply with the specifications for studs in clause 7 of AWS D1.1.

Replace "horizontal" in the 8th paragraph of section 83-1.02G(2) with:

07-18-14

vertical

Replace "sets" in the 10th paragraph of section 83-1.02G(2) with:

07-19-13

copies

Replace the 1st sentence of the 1st paragraph of section 83-1.03 with:

11-15-13

Except for guardrail within the pay limits of a terminal system, a transition railing (Type WB-31), an end anchor assembly, or a rail tensioning assembly, midwest guardrail system is measured along the face of the rail element from end post to end post of the completed railing.

Add to section 83-2.02D(1):

10-21-11

For a concrete barrier transition:

1. Remove portions of the existing concrete barrier where shown under section 15-3
2. Roughen the contact surface of the existing concrete barrier
3. Drill and bond dowels into the existing concrete barrier under section 51-1

Add to section 83-2.02:

10-19-12

83-2.02H–83-2.02M Reserved

^^

84 TRAFFIC STRIPES AND PAVEMENT MARKINGS

05-30-14

Replace section 84-1.01C with:

05-30-14

84-1.01C Submittals

For glass beads used in drop-on applications and in thermoplastic formulations, submit a certificate of compliance and test results for each lot of beads specifying the EPA test methods used and tracing the lot to the specific test sample. The testing for lead and arsenic content must be performed by an independent testing laboratory.

Submit retroreflectivity readings for traffic stripes and pavement markings at locations with deficient retroreflectivity determined by the Engineer.

84-1.01D Quality Control and Assurance

Test each lot of glass beads for arsenic and lead under EPA Test Method 3052 and 6010B or 6010C.

Applied traffic stripes and pavement markings must be retroreflective. Within 30 days of applying traffic stripes and pavement markings, the retroreflectivity of the stripes and markings must be a minimum of 250 $mcd \cdot m^{-2} \cdot lx^{-1}$ for white and 125 $mcd \cdot m^{-2} \cdot lx^{-1}$ for yellow when measured under ASTM E1710.

The Engineer will perform a nighttime, drive-through, visual inspection of the retroreflectivity of the traffic stripes and pavement markings and notify you of any locations with deficient retroreflectivity. Measure the retroreflectivity of the deficient areas using a retroreflectometer under ASTM E1710 and the sampling protocol specified in ASTM D7585.

Replace the paragraph in section 84-1.02 with:

05-30-14

Glass beads applied to paint must comply with State Specification 8010-004.

Glass beads applied to molten thermoplastic material must be Type 2 beads complying with AASHTO M 247. The glass beads must have a coating that promotes adhesion of the beads to thermoplastic.

At least 75 percent of the beads by count must be true spheres that are colorless and do not exhibit dark spots, air inclusions, or surface scratches when viewed under 20X magnification.

Each lot of glass beads used in pavement markings must contain less than 200 ppm each of arsenic and lead when tested under EPA Test Method 3052 and 6010B or 6010C.

Replace the 1st paragraph in section 84-2.04 with:

01-20-12

A double extruded thermoplastic traffic stripe consisting of two 4-inch wide yellow stripes is measured as 2 traffic stripes.

A double sprayable thermoplastic traffic stripe consisting of two 4-inch wide yellow stripes is measured as 1 traffic stripe.

Add to section 84:

01-20-12

84-6 THERMOPLASTIC TRAFFIC STRIPES AND PAVEMENT MARKINGS WITH ENHANCED WET NIGHT VISIBILITY

Reserved

84-7–84-10 RESERVED

^^

86 ELECTRICAL SYSTEMS

11-15-13

Replace the paragraphs in section 86-1.01 with:

07-19-13

Section 86 includes general specifications for constructing and rehabilitating electrical systems.

Electrical systems must comply with the material and installation specifications in section 86-2.

Section 86-3 includes specifications for constructing controller assemblies.

Section 86-4 includes specifications for constructing traffic signal faces, programmed visibility signal faces, pedestrian signal faces, flashing beacons, ramp metering signs, and signal mounting assemblies.

Section 86-5 includes specifications for constructing vehicle detectors and pedestrian push button assemblies.

Section 86-6 includes specifications for constructing lighting systems.

Section 86-7 includes specifications for constructing rehabilitating electrical equipment.

Comply with Part 4 of the *California MUTCD*. Nothing in section 86 is to be construed as to reduce the minimum standards in this manual.

The locations shown for electrical systems are approximate; the Engineer determines the final locations.

Replace the paragraphs in section 86-1.015 with:

07-19-13

actuation: Actuation as defined in the *California MUTCD*.

channel: Discrete information path.

controller assembly: Assembly for controlling a system's operations, consisting of a controller unit and auxiliary equipment housed in a rainproof cabinet.

controller unit: Part of the controller assembly performing the basic timing and logic functions.

detector: Detector as defined in the *California MUTCD*.

electrolier: Assembly of a lighting standard and luminaire.

flasher: Device for opening and closing signal circuits at a repetitive rate.

flashing beacon control assembly: Assembly of switches, circuit breakers, terminal blocks, flasher, wiring, and other necessary electrical components housed in a single enclosure for operating a beacon.

inductive loop detector: Detector capable of being actuated by an inductance change caused by a vehicle passing or standing over the loop.

lighting standard: Pole and mast arm supporting the luminaire.

luminaire: Assembly that houses the light source and controls the light emitted from the light source.

magnetic detector: Detector capable of being actuated by an induced voltage caused by a vehicle passing through the earth's magnetic field.

powder coating: Coating applied electrostatically using exterior-grade UV-stable polymer powder.

pretimed controller assembly: Assembly operating traffic signals under a predetermined cycle length.

pull box: A box with a cover that is installed in an accessible place in a run of conduit to facilitate the pulling in of wires or cables.

signal face: Signal face as defined in the *California MUTCD*.

signal head: Signal head as defined in the *California MUTCD*.

signal indication: Signal indication as defined in the *California MUTCD*.

signal section: Signal section as defined in the *California MUTCD*.

signal standard: Pole and mast arm supporting 1 or more signal faces with or without a luminaire mast arm.

traffic-actuated controller assembly: Assembly for operating traffic signals under the varying demands of traffic as registered by detector actuation.

traffic phase: Signal phase as defined in the *California MUTCD*.

vehicle: Vehicle as defined in the *California Vehicle Code*.

Replace the paragraphs in section 86-1.02 with:

07-19-13

Comply with 8 CA Code of Regs § 2299 et seq.

Electrical equipment must comply with one or more of the following standards:

1. ANSI
2. ASTM
3. EIA
4. NEMA
5. NETA
6. UL
7. Public Utilities Commission, General Order No. 95, "Rules for Overhead Electrical Sign Construction"
8. Public Utilities Commission, General Order No. 128, "Rules for Construction of Underground Electric Supply and Communication Systems"

Materials and workmanship must comply with:

1. FCC rules

2. ITE standards
3. NEC
4. California Electrical Code

Electrical equipment and materials must be NRTL certified wherever applicable.

Replace the paragraphs in section 86-1.03 with:

07-19-13

Submit a schedule of values within 15 days after Contract approval.

Determine the quantities required to complete the work. Submit the quantities as part of the schedule of values.

Provide a schedule of values for each lump sum bid item.

Do not include costs for the traffic control system in the schedule of values.

The schedule of values must include the type, size, and installation method for:

1. Foundations
2. Standards and poles
3. Conduit
4. Pull boxes
5. Conductors and cables
6. Service equipment enclosures
7. Telephone demarcation cabinets
8. Vehicle signal heads and hardware
9. Pedestrian signal heads and hardware
10. Push buttons
11. Loop detectors
12. Luminaires and lighting fixtures
13. Materials shown in the quantity tables on plan sheets labeled *E*

Replace the paragraphs in section 86-1.04 with:

07-19-13

Within 15 days of Contract approval, submit a list of equipment and materials that you propose to install. Submit the list before shipping equipment or materials to the job site. The list must include the following information:

1. Manufacturer's name
2. Make and model number
3. Month and year of manufacture
4. Lot and serial numbers
5. Dimensions
6. List of components
7. Manufacturer's installation instructions
8. Contract number
9. Your contact information

Supplement the list with 2 copies of the following data:

1. Schematic wiring diagrams
2. Scale drawings of cabinets showing location and spacing of shelves, terminal blocks, and equipment, including dimensions
3. Operation manual

Electrical equipment constructed as shown does not require detailed drawings and diagrams.

Submit 3 sets of computer-generated schematic wiring diagrams for the cabinet.

Place the schematic wiring diagram in a heavy-duty plastic envelope and attach it to the inside of the cabinet door.

Prepare diagrams, plans, and drawings using graphic symbols in IEEE 315, "Graphic Symbols for Electrical and Electronic Diagrams."

Replace the 5th paragraph of section 86-2.04B(2) with:

07-19-13

HS bolts, nuts, and flat washers used to connect slip base plates must comply with the requirements for HS fastener assemblies for use in structural steel joints in section 55-1.02A(1) except rotational capacity testing and tension testing are not required.

07-19-13

Delete the row for standard Type 36-20A in the table in the 6th paragraph of section 86-2.04B(2).

Replace the 10th paragraph of section 86-2.04B(2) with:

07-19-13

Bolted connections attaching signal or luminaire arm to the pole must be considered slip critical. Galvanized faying surfaces of plates on luminaire arm, signal arm, and pole must be roughened by hand using a wire brush before assembly and must comply with requirements for Class C surface conditions for slip-critical connections in *Specification for Structural Joints Using High-Strength Bolts* of the RCSC. Coatings for faying surfaces must comply with the RCSC specification for Class B coatings.

Replace the 1st sentence of item 8 in the list in the 1st paragraph of section 86-2.04B(3) with:

07-19-13

During manufacturing, longitudinal seams on vertical tubular members of cantilevered support structures must be within 90 degrees circumferentially of the center of the longest mast arm connection.

07-19-13

Delete item 15.3 in the list in the 1st paragraph of section 86-2.04B(3).

Add between "Exposed" and "conduit" in the 2nd paragraph of section 86-2.05B:

07-19-13

Type 1

Replace the 1st sentence of the 10th paragraph of section 86-2.05C with:

07-19-13

After installing conduit, install the pull tape.

Replace the 1st sentence of the 15th paragraph of section 86-2.05C with:

11-15-13

Conduit runs shown to be located behind curbs may be installed in the street within 3 feet of and parallel to the face of the curb by the trenching in pavement method.

Replace the 1st and 2nd sentences of the 2nd paragraph of section 86-2.05D with:

07-19-13

Install an expansion-deflection fitting for expansion joints with a 1-1/2-inch movement rating. The fitting must be watertight and include a molded neoprene sleeve, a bonding jumper, and 2 silicon bronze or zinc-plated iron hubs.

Replace section 86-2.06 with:

07-19-13

86-2.06 PULL BOXES

86-2.06A General

86-2.06A(1) Cover Marking

The cover marking must be clearly defined, uniform in depth, and parallel to either the long or short sides of the cover.

Marking letters must be 1 to 3 inches high.

Before galvanizing steel or cast iron cover, apply marking by one of the following methods:

1. Use cast iron strip at least 1/4 inch thick with letters raised a minimum of 1/16 inch. Fasten strip to cover with 1/4-inch flathead stainless steel machine bolts and nuts. Peen bolts after tightening.
2. Use sheet steel strip at least 0.027 inch thick with letters raised a minimum of 1/16 inch. Fasten strip to cover by spot welding, tack welding, or brazing, with 1/4-inch stainless steel rivets or 1/4-inch roundhead stainless steel machine bolts and nuts. Peen bolts after tightening.
3. Bead weld the letters on cover such that the letters are raised a minimum of 3/32 inch.

86-2.06A(2) Installation and Use

Space pull boxes no more than 200 feet apart. You may install additional pull boxes to facilitate the work.

You may use a larger standard size pull box than that shown on the plans or specified.

A pull box in ground or sidewalk area must be installed as follows:

1. Embed bottom of the pull box in crushed rock.
2. Place a layer of roofing paper on the crushed rock.
3. Place grout over the layer of roofing paper. Grout must be 0.50 to 1 inch thick and sloped toward the drain hole.
4. Make a 1-inch drain hole in the center of the pull box through the grout and roofing paper.
5. Place grout between the pull box and the pull box extension, and around conduits.

The top of the pull box must be flush with the surrounding grade or the top of an adjacent curb, except in unpaved areas where the pull box is not immediately adjacent to and protected by a concrete foundation, pole, or other protective construction. Place the pull box 1-1/4 inches above the surrounding grade. Where practical, place a pull box shown in the vicinity of curbs or adjacent to a standard on the side of the foundation facing away from traffic. If a pull box is installed in a sidewalk area, adjust the depth of the pull box so that the top of the pull box is flush with the sidewalk.

Reconstruct the sump of an existing pull box if disturbed by your activities. Remove old grout and replace with new if the sump was grouted.

86-2.06B Non–Traffic Pull Boxes

Reserved

86-2.06C Traffic Pull Boxes

The traffic pull box and cover must comply with ASTM C857, "Standard Practice for Minimum Structural Design Loading for Underground Precast Concrete Utility Structures," for HS20 loading. You must be able to place the load anywhere on the box and cover for 1 minute without causing cracks or permanent deformations.

Frame must be anchored to the box with 1/4 by 2-1/4 inch concrete anchors. Four concrete anchors must be included for No. 3-1/2(T) pull box; one placed in each corner. Six concrete anchors must be included for No. 5(T) and No. 6(T) pull boxes; one placed in each corner and one near the middle of each of the longer sides.

Nuts must be zinc-plated carbon steel, vibration resistant, and have a wedge ramp at the root of the thread.

After installation of traffic pull box, install the steel cover and keep it bolted down when your activities are not in progress at the pull box. When the steel cover is placed for the final time, the cover and Z bar frame must be cleaned of debris and tightened securely.

Steel cover must be countersunk approximately 1/4 inch to accommodate the bolt head. When tightened, the bolt head must not exceed more than 1/8 inch above the top of the cover.

Concrete placed around and under traffic pull boxes must be minor concrete.

Replace the 11th row in the table in the 1st paragraph of section 86-2.08B with:

07-19-13

Grounded circuit conductor	Pedestrian push buttons	Wht	Blk	NBR	14
	Signals and multiple lighting	Wht	None	NBR	10
	Flashing beacons and sign lighting	Wht	None	NBR	12
	Lighting control	Wht	None	C-3	14
	Service	Wht	None	NBR	14

Replace the 1st sentence of the 1st paragraph of section 86-2.08C with:

07-19-13

Circuit conductors, connectors, and terminals must be UL or NRTL listed and rated for 600 V(ac) operation.

Add to the beginning of section 86-2.09A:

07-19-13

Provide enough traffic signal light conductors for functional operation of the signal. Provide 3 spare conductors in all conduits containing traffic signal light conductors.

Replace the paragraphs in section 86-2.09C with:

07-19-13

Connectors must be crimp type. Use a manufacturer-recommended tool for connectors and terminals to join conductors. Comply with SAE-AS7928.

Terminate stranded conductors smaller than no. 14 in crimp style terminal lugs.

Terminate field conductors no. 12 and smaller with spade type terminals. Terminate field conductors no. 10 and larger with spade type or ring type terminals.

Replace the value for resistivity in the table in the 6th paragraph of section 86-2.09E with:

07-19-13

25×10^{13} Ω per inch, minimum

Add between "the" and "head" in the 3rd sentence of the 2nd paragraph of 86-2.09F:

07-19-13

connector

Replace "project" in the 3rd paragraph of section 86-2.11A with:

10-19-12

work

Replace "Contract" in item 2 in the list in the 11th paragraph of section 86-2.11A with:

10-19-12

work

07-19-13

Delete the 12th paragraph of section 86-2.11A.

Replace section 86-2.11C with:

07-19-13

86-2.11C Electrical Service for Booster Pumps

Provide electrical service from the service point to the booster pump.

Furnish conductors, conduit, and pull boxes from the service point to the booster pump.

Do not use Type 3 conduit unless shown otherwise.

Replace section 86-2.14A with:

07-19-13

86-2.14A General

Deliver material and equipment for acceptance testing to either METS or a testing location as ordered.

Allow 30 days for testing. The Department notifies you when testing is complete. You must pick up the material or equipment from the test site and deliver it to the job site.

If material or equipment is rejected, allow 30 days for retesting. The retesting period starts when replacement material or equipment is delivered to the test site.

If material or equipment submitted for testing does not comply with the specifications, remove it within 5 business days after you are notified that the equipment is rejected. If equipment is not removed within that period, the Department may ship it to you and deduct the shipping cost.

Testing and quality control procedures for traffic signal controller assemblies must comply with NEMA TS standards for traffic control systems.

Replace the 2nd paragraph of section 86-3.02A(1) with:

07-19-13

The Department furnishes the BBS components under section 6-2.03.

Replace the 9th paragraph of section 86-3.02B with:

07-19-13

The couplings between the external cabinet and Model 332L cabinet must include a conduit for power connections between the 2 cabinets. Couplings must include:

1. 2-inch nylon-insulated steel chase nipple

2. 2-inch sealing steel locknut
3. 2-inch nylon-insulated steel bushing

07-19-13

Delete item 1.3 in the list in the 7th paragraph of section 86-3.04A.

Replace the 2nd paragraph of section 86-4.01A with:

07-19-13

The housing must not fail structurally as described in the following table:

Housing Structural Failure

Housing type	Test method	Description of structural failure
Metal	California Test 666	Fracture within the housing assembly or deflection of more than half the lens diameter of the signal section during the wind load test
Plastic	California Test 605	Fracture within the housing assembly or deflection of more than 10 degrees in either the vertical or horizontal plane after the wind load has been removed from the front of the signal face or deflection of more than 6 degrees in either the vertical or horizontal plane after the wind load has been removed from the back of the signal face

Replace the 1st sentence of section 86-4.01A(1) with:

07-19-13

Each metal housing must have a metal visor.

Replace the 1st sentence of section 86-4.01A(2) with:

07-19-13

Each plastic housing must be molded in 1 piece or fabricated from 2 or more pieces and joined into a single piece.

07-19-13

Delete item 1 in the list in section 86-4.01D(1)(b).

Replace the paragraphs in section 86-4.01D(1)(c)(i) with:

07-19-13

LED signal modules must be on the Authorized Material List for LED traffic signals.

The Department tests modules under section 86-2.14A, ANSI/ASQ Z1.4, and:

1. California Test 604 for LED and circular LED signal modules
2. California Test 3001 for arrow, U-turn, and bicycle LED signal modules

The LED signal modules submitted for testing must be typical production units. LEDs must be spread evenly across the module.

The Department may test the modules on all parameters specified in section 86-4.01D.

Replace the 1st and 2nd sentences of the 3rd paragraph of 86-4.01D(2)(b) with:

07-19-13

The electrical connection for each flashing LED signal module must be 4 secured, color-coded, jacketed copper wires. The wire must comply with the NEC.

Replace the heading of section 86-4.02 with:

07-19-13

PROGRAMMED VISIBILITY VEHICLE SIGNAL SECTION

Replace "face" in the 1st paragraph of section 86-4.02 with:

07-19-13

section

Add before the 1st sentence in section 86-4.03A:

07-19-13

The pedestrian signal face must be Type A.

Replace the 1st sentence of the 2nd paragraph of section 86-4.03B with:

07-19-13

The Department tests the pedestrian signal's front screen in a horizontal position with its edges supported.

07-19-13

Delete items 1 and 4 in the list in section 86-4.03I(1)(b).

Replace the paragraphs of section 86-4.03I(1)(c)(i) with:

07-19-13

The LED PSF module must be on the Authorized Material List for LED traffic signals.

The Department tests LED PSF modules under section 86-2.14A, ANSI/ASQ Z1.4, and California Test 606.

The LED PSF modules submitted for testing must be representative of typical production units.

The Department may test the modules on all parameters specified in section 86-4.03I.

Replace item 1 in the list in the 1st paragraph of section 86-4.03I(2) with:

07-19-13

1. Not include reflectors.

Replace item 6 in the list in the 1st paragraph of section 86-4.03I(2) with:

07-19-13

6. Be able to replace signal lamp optical units and pedestrian signal faces with LEDs.

Replace the table titled "Chromaticity Standards (CIE Chart)" in the 16th paragraph of section 86-4.03I(2) with:

07-19-13

Chromaticity Standards (CIE Chart)

Upraised hand	X: not greater than 0.659 or less than 0.600 Y: not greater than 0.390 or less than 0.331 Y= 0.990-X
Walking person	X: not greater than 0.440 or less than 0.280 Y: not greater than 0.0483 + 0.7917(X) or less than 0.0983 + 0.7917(X)

Add between "beacon" and "must" in the 1st sentence of section 86-4.05:

07-19-13

signal face

07-19-13

Delete "face" in item 1 in the list in the 1st paragraph of section 86-4.05.

Replace the row for viscosity in the table in the 2nd paragraph of section 86-5.01A(3)(c) with:

07-19-13

Viscosity, Brookfield Thermosel, no. 27 Spindle, 20 rpm, 190 °C	D 4402	2.5–3.5 Pa·s

Replace the paragraph in section 86-5.01A(3)(d) with:

07-19-13

Use epoxy sealant for repair work in and around sawcuts housing inductive loops.

Replace "all loop conductors" in the 3rd paragraph of section 86-5.01A(4) with:

07-19-13

the detector lead-in cable

Replace "Encase the loop wires" in the 1st sentence of the 3rd paragraph of section 86-5.01A(5) with:

07-19-13

The loop wires must be encased

Replace section 86-5.02 with:

07-19-13

86-5.02 PUSH BUTTON ASSEMBLIES

The housing for a push button assembly must be die-cast or permanent mold-cast aluminum. The assembly must be rainproof and shockproof in any weather condition.

The push button's switch must be a single-pole, double-throw switching unit with screw-type terminals rated 15 A at 125 V(ac). The switch must have:

1. Plunger actuator and a U frame to allow recessed mounting in the push button housing
2. Operating force of 3.5 lb
3. Maximum pretravel of 5/64 inch

4. Minimum overtravel of 1/32 inch
5. Differential travel from 0.002 to 0.04 inch
6. 2-inch minimum diameter actuator

Where a push button is attached to a pole, the housing must be shaped to fit the pole's curvature. Use saddles if needed to make a neat and secure fit.

Where a push button is mounted on top of a 2-1/2-inch-diameter post, fit the housing with a slip fitter and use screws to rigidly secure it to the post.

Install the push button and the sign on the crosswalk side of the pole.

Attach the sign on a Type B push button assembly.

For a Type C push button assembly, mount the instruction sign on the same standard as the assembly using 2 straps and saddle brackets.

Add to section 86-5:

07-19-13

86-5.03 ACCESSIBLE PEDESTRIAN SIGNAL

Reserved

Replace "lthe amp" in item 2 in the list in the 1st paragraph of section 86-6.01A(2) with:

07-19-13

the lamp

^^

DIVISION X MATERIALS

88 GEOSYNTHETICS

07-19-13

Add to section 88-1.01C:

07-19-13

Geosynthetics must be on the DataMine list for geotextiles and geosynthetics at the National Transportation Product Evaluation Program Web site. The product name, manufacturing source, and date of manufacture must be printed every 5 meters along the edge of the material.

Exceptions are:

1. Paving mat
2. Paving grid, Class 2 and 3
3. Biaxial geogrid

Replace the row for hydraulic bursting strength in the table in the 2nd paragraph of section 88-1.02B with:

10-19-12

Puncture strength, lb min	ASTM D 6241	310
Trapezoid tearing strength, lb min	ASTM D 4533	56

Replace the 3rd paragraph in section 88-1.02C with:

10-19-12

Geocomposite wall drain must be from 0.25 to 2 inches thick.

Replace the value for permittivity of woven fabric in the table in the 1st paragraph of section 88-1.02E with:

01-20-12

0.05

Replace the value for apparent size opening of nonwoven fabric in the table in the 1st paragraph of section 88-1.02E with:

01-20-12

0.012

Replace the table in the 1st paragraph of section 88-1.02G with:

01-20-12

Sediment Filter Bag

Property	Test	Values	
		Woven	Nonwoven
Grab breaking load, lb, 1-inch grip min, in each direction	ASTM D 4632	200	250
Apparent elongation, percent min, in each direction	ASTM D 4632	10	50
Water flow rate, gal per minute/sq ft min and max average roll value	ASTM D 4491	100-200	75-200
Permittivity, sec^{-1} min	ASTM D 4491	1.0	1.0
Apparent opening size, inches max average roll value	ASTM D 4751	0.023	0.012
Ultraviolet resistance, % min retained grab breaking load, 500 hr.	ASTM D 4355	70	70

Replace the table in the 1st paragraph of section 88-1.02H with:

01-20-12

Temporary Cover

Property	Test	Values	
		Woven	Nonwoven
Grab breaking load, lb, 1-inch grip min, in each direction	ASTM D 4632	200	200
Apparent elongation, percent min, in each direction	ASTM D 4632	15	50
Water flow rate, gal per minute/sq ft min and max average roll value	ASTM D 4491	4-10	80-120
Permittivity, sec^{-1} min	ASTM D 4491	0.05	1.0
Apparent opening size, inches max average roll value	ASTM D 4751	0.023	0.012
Ultraviolet resistance, % min retained grab breaking load, 500 hr.	ASTM D 4355	70	70

Replace section 88-1.02P with:

01-18-13

88-1.02P Biaxial Geogrid

Geosynthetics used for biaxial geogrid must be a punched and drawn polypropylene material formed into an integrally formed biaxial grid. When tested under the referenced test methods, properties of biaxial geogrid must have the values shown in the following table:

Biaxial Geogrid

Property	Test	Value
Aperture size, inch[a] min and max	Calipered	0.8-1.3 x 1.0-1.6
Rib thickness, inch min	Calipered	0.04
Junction thickness, inch min	Calipered	0.150
Tensile strength, 2% strain, lb/ft[a] min	ASTM D 6637	410 x 620
Tensile strength at ultimate, lb/ft[a] min	ASTM D 6637	1,310 x 1,970
Ultraviolet resistance, percent min retained tensile strength, 500 hours	ASTM D 4355	100
Junction strength, lb/ft[a] min	ASTM D 7737	1,220 x 1,830
Overall flexural rigidity, mg-cm min	ASTM D 7748	750,000
Torsional rigidity at 20 cm-kg, mm-kg/deg[b] min	GRI:GG9	0.65

[a]Machine direction x cross direction
[b]Geosynthetic Research Institute, Test Method GG9, *Torsional Behavior of Bidirectional Geogrids When Subjected to In-Plane Rotation*

Replace section 88-1.02Q with:

07-19-13

88-1.02Q Geosynthetic Bond Breaker

Geosynthetic bond breaker must be nonwoven; needle punched; not heat treated; polypropylene, polyethylene material.

When tested under the referenced test methods, properties of geosynthetic bond breaker material must have the values shown in the following table:

Geosynthetic Bond Breaker

Property	Test	Value
Mass per unit area, oz/sq yd min	ASTM D 5261	14.7
Thickness at 29 psi, mm min	ASTM D 5199	1.0
Tensile strength at ultimate, lbs/ft min	ASTM D 4595	685
Elongation, percent max	ASTM D 4595	130
Permittivity at 2.9 psi, m/s min	ASTM D 5493	0.0001
Hydraulic transmissivity at 29 psi, m/s min	ASTM D 6574	0.0002
Ultraviolet resistance, percent min retained grab breaking load, 500 hours	ASTM D 4355	60

^^

90 CONCRETE

07-19-13

Replace the 3rd paragraph of section 90-1.01C(7) with:

08-05-11

Submit weighmaster certificates in printed form or, if authorized, in electronic media. Present electronic media in a tab-delimited format on a CD or DVD. Captured data for the ingredients represented by each batch must be line feed carriage return and one line separate record with sufficient fields for the specified data.

Replace the 3rd paragraph of section 90-3.01C(5) with:

08-05-11

Production data must be input by hand into a pre-printed form or captured and printed by the proportioning device. Present electronic media containing recorded production data in a tab-delimited format on a CD or DVD. Each capture of production data must be followed by a line feed carriage return with sufficient fields for the specified data.

Replace the 1st paragraph of section 90-4.01A with:

07-19-13

Section 90-4 includes specifications for fabricating PC concrete members.

Replace the paragraphs in section 90-4.01C with:

07-19-13

90-4.01C(1) General

For reports and logs, type or clearly print the name next to the signature of the person signing the report or log.

Submit expansion test data under section 90-4.02, if required.

90-4.01C(2) Certificates of Compliance

Submit a certificate of compliance for the cementitious material used in PC concrete members. The certificate must be signed by the PC concrete product manufacturer.

Submit a certificate of compliance for each PC concrete member. The certificate of compliance for tier 1 and tier 2 members must be signed by the QC manager. The certificate of compliance for tier 3 members must be signed by the QC Inspector.

90-4.01C(3) Precast Concrete Quality Control Plan

Before performing any precasting activities for tier 1 and tier 2 PC concrete members, submit 3 copies of the project-specific QC plan for the PC plant. The QC plan must supplement the information from the authorized facility audit. Submit a separate QC plan for each plant. Allow 25 days for review.

Each project-specific QC plan must include:

1. Name of the precasting plant, concrete plants, and any testing laboratory to be used.
2. Manual prepared by the precasting plant that includes:
   - 2.1. Equipment description
   - 2.2. Testing procedures
   - 2.3. Safety plan
   - 2.4. Personnel names, qualifications, and copies of certifications
3. QC manager and QC inspector names, qualifications, and copies of certifications.
4. Organizational chart showing QC personnel and their assigned QC responsibilities.
5. Methods and frequencies for performing QC procedures including inspections, material testing, and any survey performed for all components of PC concrete members. Components include prestressing, concrete, grout, reinforcement, steel, miscellaneous metal, and formwork.
6. System for reporting noncompliant PC concrete members to the Engineer.
7. System for identification and tracking repairs and repair methods.
8. Procedure for the reinspection of repaired PC concrete members.
9. Forms for certificates of compliance, daily production logs, and daily reports.

Submit a revised QC plan for any changes to:

1. Concrete plants
2. Material sources
3. Material testing procedures
4. Testing laboratory
5. Procedures and equipment
6. Updated systems for tracking and identifying PC concrete members
7. QC personnel

After authorization, submit 7 copies of each authorized QC plan and make 1 copy available at each location where work is performed.

Allow 7 days for review of a revised QC plan.

90-4.01C(4) Daily Production Log

The QC inspector must provide reports to the QC manager for each day that precasting activities are performed.

The QC manager must maintain a daily production log of PC activities for each day's precasting. PC activities include setting forms, placing reinforcement, setting prestressing steel, casting, curing, post tensioning, and form release. This daily log must be available at the precasting plant. The daily log must include:

1. Plant location
2. Specific description of casting or related activities
3. Any problems or deficiencies discovered
4. Any testing or repair work performed
5. Names of QC inspectors and the specific QC inspections they performed that day
6. Reports for that day's precasting activities from each QC inspector including before, during, and after precast inspections

Immediately notify the Engineer when any precasting problems or deficiencies are discovered, and submit the proposed repair or process changes necessary to correct them.

90-4.01C(5) Precast Concrete Report

Before shipping PC concrete members, submit a PC concrete report. The report must include:

1. Reports of all material tests and any survey checks
2. Documentation that:
   2.1. You have evaluated all tests
   2.2. You corrected all rejected deficiencies
   2.3. Repairs have been reexamined with the required tests and found acceptable
3. Daily production logs
4. Certificates of compliance
5. Documentation of inspections

Each person who performs a material test or survey check must sign the corresponding report and submit the report directly to the QC manager.

Replace the paragraphs in section 90-4.01D with:

07-19-13

90-4.01D(1) General

Quality control and assurance for PC concrete includes:

1. Your QC program
2. Department's acceptance of PC concrete members

PC concrete members are categorized into the following 4 tiers:

1. Tier 1 consists of:
   1.1. Components of bridge structures, including girders, deck panels, bent caps, abutments, slabs, closure wall panels, and piling
   1.2. Prestressed pavement
2. Tier 2 consists of:
   2.1. Components of earth retaining systems
   2.2. Wingwalls
   2.3. Types A, B, and C pipe culvert headwalls, endwalls, and wingwalls
   2.4. Pavement
   2.5. Box culverts
   2.6. Sound wall panels and supports
3. Tier 3 consists of:
   3.1. Pipes
   3.2. Pipe drainage facilities
   3.3. Straight and "L" pipe culvert headwalls except those listed under tier 2
   3.4. Drainage Inlets
   3.5. Flared end sections
4. Tier 4 consists of any member not described as tier 1, tier 2, or tier 3

90-4.01D(2) Quality Control

90-4.01D(2)(a) General

For tier 1 and tier 2 PC concrete members:

1. Fabricate PC concrete members at a plant on the Authorized Facility Audit List
2. Assign a PC concrete QC manager to the plant
3. Assign a QC inspector who is either registered as a civil engineer in the State or:
   3.1. For tier 1, has a Plant Quality Personnel Level II certification from the Precast/Prestressed Concrete Institute
   3.2. For tier 2, has a Plant Quality Personnel Level I certification from the Precast/Prestressed Concrete Institute
4. Prepare a PC concrete QC plan
5. Perform PC concrete materials testing
6. Maintain a daily production log

7. Prepare a PC concrete report
8. Prepare a certificate of compliance

For tier 3 PC concrete members:

1. Assign a QC inspector who has one of the following qualifications:
   1.1. Registration as a civil engineer in the State.
   1.2. Plant Quality Personnel, Level I certification from the Precast/Prestressed Concrete Institute.
   1.3. Competency to perform inspection of PC operations. An inspector is competent if the individual has completed training or has experience in PC operations and inspection.
2. Prepare a certificate of compliance

For tier 4 PC concrete members, prepare a certificate of compliance.

For each ASTM test method specified in this section, the material's test result must comply with the requirement specified for the comparable test in section 90 unless otherwise specified.

If curing compound is used, provide certificate of compliance as specified in section 90-1.01C(5).

If PC concrete is manufactured at an established PC concrete plant, a trial batch and prequalification of the materials, mix proportions, mixing equipment, and procedures under section 90-1.01D(5)(b) are not required.

90-4.01D(2)(b) Quality Control Meeting

After submitting the PC concrete QC plan, hold a meeting to discuss the requirements for PC concrete QC. The meeting attendees must include the Engineer, the PC concrete QC manager, and a representative from each plant performing PC concrete activities for the Contract.

90-4.01D(2)(c) Sampling, Testing, and Inspecting

The QC laboratory testing personnel or the QC inspector must witness sampling. The QC laboratory testing personnel must perform testing.

QC laboratory testing personnel must have the following certifications, as applicable:

1. ACI Strength Testing Technician
2. ACI Concrete Laboratory Testing Technician Level 1
3. ACI Aggregate Testing Technician Level 2

The QC Inspector must perform inspections before, during, and after casting is complete.

QC field testing and inspection personnel must have an ACI Concrete Field Testing Technician, Grade I certification.

For each mix design used for tier 1 and tier 2 PC concrete members, perform sampling and testing at the minimum frequencies shown in the following tables:

Aggregate QC Tests

Property	Test method	Minimum testing frequency
Aggregate gradation	ASTM C136	Once per 400 cu yd of concrete cast or once a week, whichever is more frequent
Sand equivalent	ASTM D2419	
Percent fines under 75 microns[a]	ASTM C117	
Moisture content of fine aggregate	ASTM C566, or electronically actuated moisture meter[b]	1–2 times per each day of pour, depending on conditions

[a]Percent fines under 75 microns test replaces the cleanness test in section 90-1.02C with the requirements of 1.5 percent maximum for "Operating Range" and 2.0 percent maximum for "Contract Compliance." The 5th paragraph of section 90-1.02C(2) does not apply.
[b]Electronically actuated moisture meter must be calibrated once per week per ASTM C566.

Concrete QC Tests

Property	Test method	Minimum testing frequency
Compressive strengthb	ASTM C172/C172M, ASTM C31/C31M, and ASTM C39/C39M	Once per 100 cu yd of concrete cast, or every day of casting, whichever is more frequent
Slump	ASTM C143/C143M	
Temperature	ASTM C1064/C1064M	
Density	ASTM C138	Once per 600 cu yd of concrete cast or each week of batching, whichever is more frequent
Air content	ASTM C231/C231M or ASTM C173/C173M[a]	If concrete is air entrained, once for each set of cylinders, and when conditions warrant

[a]ASTM C173/C173M must be used for lightweight concrete.
[b]Cylinders must be 6 by 12 inches.

If concrete is batched at more than 1 plant, perform the tests at each plant.

Cure test cylinders for determining time of prestressing loading in the same manner as the concrete in the member.

Cure test cylinders for determining compliance with 28-day strength requirements in the same manner as the member until completion of the steam curing process followed by a water bath or moist room at 60 to 80 degrees F until tested.

For PC concrete that is steam cured, concrete designated by compressive strength is acceptable if its compressive strength reaches the described 28-day compressive strength in no more than the maximum number of days specified or allowed after the concrete is cast.

90-4.01D(3) Quality Assurance

For PC concrete that is steam cured, the Engineer evaluates the compressive strength based on individual tests representing specific portions of production.

Add between the 1st and 2nd paragraphs of section 90-4.02:

07-19-13

PC portland cement based repair material must be on the Authorized Material List.

If municipally supplied potable water is used for PC concrete, the testing specified in section 90-1.02D is waived unless requested.

Add to section 90-4.03:

07-19-13

For dimensional tolerances of PC concrete members, comply with the Precast/Prestressed Concrete Institute Concrete Institute's *Tolerance Manual for Precast and Prestressed Concrete Construction, MNL 135-00*.

For tier 1 and tier 2 PC concrete members, apply curing compound using power-operated spraying equipment. You may request application by hand spraying for small quantities of PC concrete members. For tier 3 and tier 4 PC concrete members, the application of curing compound may be hand sprayed.

Replace the item 2 in the list in the 2nd paragraph of section 90-4.03 with:

07-19-13

2. To prevent moisture loss on the exposed surfaces during the presteaming period, cover the concrete as soon as possible after casting or keep the exposed surfaces wet by fog spray, curing compound, or wet blankets.

^^

91 PAINT

10-19-12

Add to section 91-2:

10-19-12

91-2.03 MOISTURE-CURED POLYURETHANE COATING

Reserved

Replace "saint" in the 1st paragraph of section 91-4.05 with:

10-19-12

paint

^^

92 ASPHALTS

07-19-13

Replace "Reserved" in section 92-1.01B with:

07-19-13

modified asphalt binder: Asphalt binder modified with polymers, crumb rubber, or both.

Replace the row for dynamic shear for original binder in the table in the 1st paragraph of section 92-1.02B with:

01-20-12

Dynamic shear,						
Test temperature at 10 rad/s, °C	T 315	58	64	64	64	70
min G*/sin(delta), kPa		1.00	1.00	1.00	1.00	1.00
max G*/sin(delta), kPa		2.00	2.00	2.00	2.00	2.00

Replace 2nd paragraph of section 92-1.02B with:

07-19-13

PG modified asphalt binder must comply with the requirements shown in the following table:

PG Modified Asphalt Binder

Property	AASHTO Test Method	Grade		
		PG 58–34 M	PG 64–28 M	PG 76–22 M
Original Binder				
Flash point, min °C	T 48	230	230	230
Solubility, min %	T 44[a]	97.5	97.5	97.5[b]
Viscosity at 135 °C[c], max, Pa·s	T 316	3.0	3.0	3.0
Dynamic shear, Test temperature at 10 rad/s, °C min G*/sin(delta), kPa	T 315	58 1.00	64 1.00	76 1.00
RTFO test[d], Mass loss, max, %	T 240	1.00	1.00	1.00
RTFO Test Aged Binder				
Dynamic shear, Test temperature at 10 rad/s, °C min G*/sin(delta), kPa	T 315	58 2.20	64 2.20	76 2.20
Dynamic shear, Test temperature at 10 rad/s, °C max (delta), degree	T 315	80[e]	80[e]	80[e]
Elastic recovery[f], Test temperature °C min recovery, %	T 301	25 75	25 75	25 65
PAV[g], temperature, °C	R 28	100	100	110
RTFO Test and PAV Aged Binder				
Dynamic shear, Test temperature at 10 rad/s, °C max G*sin(delta), kPa	T 315	16 5000	22 5000	31 5000
Creep stiffness, Test temperature, °C max S-value, MPa min M-value	T 313	-24 300 0.300	-18 300 0.300	-12 300 0.300

[a]The Department allows ASTM D 5546 or ASTM D 7753 instead of AASHTO T 44. Particles recovered from ASTM D 5546 or ASTM D 7753 or AASHTO T 44 must be less than 250 µm.
[b]Report only for spray application.
[c]The Engineer waives this specification if the supplier provides written certification the asphalt can be adequately pumped and mixed at temperatures meeting applicable safety standards.
[d]"RTFO Test" means the asphaltic residue obtained using the Rolling Thin Film Oven Test, AASHTO Test Method T 240 or ASTM D 2872. The residue from mass change determination may be used for other tests.
[e]Test temperature is the temperature at which G*/sin(delta) is 2.2 kPa. A graph of log G*/sin(delta) plotted against temperature may be used to determine the test temperature when G*/sin(delta) is 2.2 kPa. A graph of (delta) versus temperature may be used to determine delta at the temperature when G*/sin(delta) is 2.2 kPa. The graph must have at least two points that envelope G*/sin(delta) of 2.2 kPa and the test temperature must not be more than 6 degree C apart. The Engineer also accepts direct measurement of (delta) at the temperature when G*/sin(delta) is 2.2 kPa.
[f]Tests without a force ductility clamp may be performed.
[g]"PAV" means "Pressure Aging Vessel."

Do not modify PG modified asphalt binder using polyphosphoric acid.

Crumb rubber must be from automobile and truck tires and must be free from contaminants including fabric, metal, minerals, and other nonrubber substances.

PG modified asphalt binder modified with crumb rubber must be homogeneous and must not contain visible particles of crumb rubber.

The supplier of PG modified asphalt binder modified with crumb rubber must:

1. Report the amount of crumb rubber by weight of asphalt binder
2. Certify a minimum of 10 percent of crumb rubber by weight of asphalt binder

^^

93 LIQUID ASPHALTS

07-19-13

Replace "Celsius" the 1st row in the table in the 8th paragraph of section 93-1.04 with:

07-19-13

Fahrenheit

^^

94 ASPHALTIC EMULSIONS

03-21-14

Replace the 1st paragraph of section 94-1.04 with:

03-21-14

Asphaltic emulsion is measured by weight under the specifications requiring its use. If water is added to the asphaltic emulsion, the quantity of asphaltic emulsion is determined before the addition of water.

PAGE LEFT BLANK INTENTIONALLY

APPENDIX C

ENVIRONMENTAL PERMIT SUMMARY FORM

PAGE LEFT BLANK INTENTIONALLY

SAN LUIS OBISPO COUNTY
DEPARTMENT OF PUBLIC WORKS
Wade Horton, Director
County Government Center, Room 206 • San Luis Obispo CA 93408 • (805) 781-5252
Fax (805) 781-1229 email address: pwd@co.slo.ca.us

ENVIRONMENTAL PERMIT SUMMARY FORM

Date: February 9, 2015

To: Cori Marsalek, Project Manager

From: Katie Drexhage, Environmental Resource Specialist

Subject: **Environmental Review & Permit Status for the Branch Mill Road Bridge Replacement Project (300385) (ED12-063)**

The environmental review and regulatory permit processes for the above referenced project are complete. The following is a summary of the environmental requirements for the project:

Permit	Status	Attachments?
CEQA Review	Mitigated Negative Declaration – SCH 2013081059 (10/8/13)	X
NEPA Review	CE – BRLO-5949(116) (revalidated, 2/3/15)	X
Coastal Permit	Not applicable, not within Coastal zone.	
CZMA	Not applicable, not within Coastal zone.	
CDFW 1602	Op Law, 1600-2014-0064-R4 (9.11.14)(include 1602 application with letter)	X
USACOE 404	SPL-2012-00706-TS (**expires 3/18/17**)	X
NMFS ESA	Biological Opinion 2013/9567 (11/15/13)	X
USFWS ESA	CRLF Programmatic BO (8-8-13-F-22)	X
RWQCB 401	3401WQ07 (7/11/14)	X

Summary Project Timeframe
Based on the below work windows, the basic work window for this project is from **June 1 to October 31**.

Measure #	**Special Environmental Conditions**	**Responsibility: Contractor, County or Both**
	PRE-CONSTRUCTION	
1	Please notify the Environmental Programs Director if the project description changes.	Both
2	A qualified biologist must conduct a survey immediately prior to the onset of work activities; the crew leader/supervisor on site must discuss survey results with the biologist prior to initiating any work.	Both
3	A biological monitor will be present during land clearing activities, and will coordinate with construction crews to allow animals to escape the work area. If any special status wildlife are in harm's way, the monitor will relocate these animals to suitable habitat outside the project impact area.	Both
4	The County will submit a Notification of Demolition to the APCD 10 days prior to bridge demolition activities.	County
5	Ensure Contractor obtains all necessary grading permits for disposal of excavated materials outside of the County ROW.	County
6	Prior to construction, the County shall obtain all necessary permits, approvals, and authorizations from jurisdictional agencies. These may include, but may not be limited to: (1) ACOE, Section 404 Nationwide Permit 43; (2) RWQCB, Section 401 Water Quality Certification; and (3) CDFW, Section 1602 Streambed Alteration Agreement for activities within the tops of banks or outer edges of riparian canopies (whichever is furthest from the streambed) of Arroyo Grande Creek. The County shall adhere to all conditions included within these permits, approvals, and authorizations.	County
7	In-stream work shall take place between June 1 and October 31 in any given year, when the surface water within Tar Spring Creek is likely to be at seasonal minimum.	Both
8	Prior to construction, exclusionary fencing shall be erected by the contractor at the boundaries of all construction areas to avoid equipment and human intrusion into adjacent creek/wetland habitats. The fencing shall remain in place and be maintained by the contractor throughout construction.	Contractor
9	If determined to be necessary by Caltrans (lead federal agency), Caltrans will consult with NMFS and USFWS on behalf of the County for impacts to California red-legged frogs and steelhead. The County will adhere to all conditions included within the Biological Opinions issued for the Project.	Both
10	Before any construction activities begin on the Project, a biologist shall conduct a training session for all construction personnel. The training session shall include a description of species that may be encountered during construction, the importance of these species and their habitat, the general measures that are being implemented to conserve these species as they relate to the Project, and the boundaries within which the Project may be accomplished.	Both

	Brochures, books, and briefings may be used in the training session, provided that a qualified person is on hand to answer any questions.	
11	Prior to the onset of work, the County shall ensure that the contractor has prepared a plan to allow a prompt and effective response to accidental spills. All workers shall be informed of the importance of preventing spills and of the appropriate measures to take should a spill occur.	County
12	Prior to site disturbance, the County shall print Best Management Practices (BMPs) on all applicable construction plans. BMPs shall be implemented prior to, during, and following construction activities. Measures shall include, but not be limited to the following: a) Silt fencing shall be placed along the down-slope side of the construction zone. b) A spill and clean-up kit shall be stored onsite at all times. c) Temporary and permanent erosion and sedimentation measures shall be implemented (e.g., silt fencing, hay bales, straw wattles, etc.).	Contractor
13	If construction activities are conducted during the typical nesting bird season (February 15 – September 15th), preconstruction surveys shall be conducted by the County-approved biologist or County Environmental Resource Specialist prior to any construction activity or vegetation trimming to identify potential bird nesting activity, and: a) If active nest sites of bird species protected under the Migratory Bird Treaty Act (MBTA) are observed within the vicinity of the Project site, then the Project shall be modified and/or delayed as necessary to avoid direct take of the identified nests, eggs, and/or young; b) If active nest sites of raptors and/or bird species of special concern are observed within the vicinity of the Project site, then CDFW shall be contacted to establish the appropriate buffer around the nest site. Construction activities in the buffer zone shall be prohibited until the young have fledged the nest and achieved independence; and c) Active nests shall be documented by a qualified biologist and a letter-report shall be submitted to the County and Caltrans who will submit the information to USFWS and CDFW, documenting Project compliance with the MBTA and applicable Project mitigation measures.	Both
14	To avoid inadvertent impacts to steelhead, California red-legged frogs, monarch butterflies, arroyo chub, coast range newt, southwestern pond turtles, two-striped garter snakes, western yellow-billed cuckoos, pallid bats, Townsend's big-eared bats, western mastiff bats, western red bats, Yuma myotis', and nesting birds, a biological monitor will conduct preconstruction surveys in Tar Spring Creek and adjacent areas within the Project site, conduct construction employee training prior to site disturbance, and continue monitoring during all initial earth disturbing activities and all diversion and dewatering activities. In the instance a listed or special-status species is discovered, the County shall contact	Both

	Caltrans, CDFW, NMFS, and USFWS for consultation, unless otherwise authorized under an NMFS- or USFWS-issued *Biological Opinion*. In the instance nesting birds are discovered, work shall cease until the birds have fledged and left the area, or CDFW or USFWS shall be consulted. If any swallow nests are observed, empty nests shall be removed prior to February 15, and shall continue to be removed as they are being built to avoid impacts to active nests prior to construction.	
15	Prior to construction, the County shall relocate pond turtles, arroyo chub, coast range newts, two-striped garter snakes, and other sensitive species from work areas encountered during construction within the project area, as necessary. Qualified biologists shall conduct a pre-construction survey for these species in and directly adjacent to the effected work area. The qualified biologists shall capture and relocate any sensitive species (if present) or other native aquatic species to suitable habitat outside of the area of impact. Observations of sensitive species or other special-status species shall be documented on CNDDB forms and submitted to CDFW upon project completion.	Both
16	Prior to construction, pre-construction surveys (at least two day-time and two at dusk) shall be conducted by qualified biologists no more than 30 days prior to construction to determine if bats are roosting in the Project area. The biologist(s) conducting the preconstruction surveys will also identify the nature of the bat utilization of the area (i.e., no roosting, night roost, day roost, maternity roost).	County
17	If bats are found to be roosting in the surveyed areas, the following measures will be implemented during construction: a) If there is only night roosting by bats and the roost substrate will not be impacted, work may proceed as normal provided that no night-time work is scheduled. b) If there is day roosting by bats (or night roosting and work during nighttime), qualified biologists shall monitor any construction activities within 100 ft (30 m) for disturbance to bat roosting. If bat roosting behavior is determined to be adversely impacted by construction activities, construction must be avoided in the vicinity of bat roosts until either bats are no longer roosting or they have been excluded from roosting. c) If maternity roosts are detected, construction activities must be avoided within 100 ft (30 m) of an active maternity roost until the end of the maternity roosting season (end of September). No roost exclusion shall be conducted if maternity roosts are detected. d) Readily visible exclusion zones shall be established in areas where roosts must be avoided.	County
18	A Habitat Mitigation and Monitoring Plan will be prepared and will include specific measures for restoration and revegetation of all temporarily disturbed areas. The Plan will include protection measures, standards for revegetation, a monitoring program to ensure proper implementation and maintenance of restored areas, and performance criteria to determine success.	County

19	Work personnel will be educated on worker safety and appropriate disposal methods prior to handling hazardous materials.	Contractor
20	Any staging or equipment/vehicle parking areas shall be free of combustible vegetation and work crews shall have shovels and a fire extinguisher on site during all construction activities.	Contractor
21	Avoid and minimize harm and mortality to steelhead from fish relocation and pile driving activities.	Both
22	Avoid and minimize the impacts to steelhead and aquatic habitat from construction activities.	Both
23	Minimize the amount and extent of sediment-related effects on the quality and quantity of instream habitat within the action area.	Contractor
24	Minimize the amount and extent of temporary and permanent changes in the quality and quantity of instream riparian habitat within the action area.	Both
25	Caltrans shall retain a biologist with expertise in the areas of resident or anadromous salmonid biology and ecology; fish/habitat relationships; biological monitoring; and handling, collecting and relocating salmonid species.	County
26	Caltrans' biological monitor shall oversee the construction site during implementation and removal of the water diversion for removing any steelhead. The biologist shall identify suitable habitat downstream of the dewatered area prior to installation of the diversion. The biologist shall capture steelhead in the isolated wetted work are and then relocate them to suitable habitat downstream. One or more of the following methods shall be used to capture steelhead: seine, dip net, throw net, minnow trap, or by hand. Electrofishing is prohibited.	County
27	To increase the likelihood that the proposed fish passage and habitat conditions would be adequately reflected in the completed proposed action, Caltrans shall provide the final grading plan to NMFS for review and comment within 30 calendar days prior to the beginning of construction. Caltrans shall use NMFS' comments to revise the grading plan, and then resubmit the plan to NMFS within 14 calendar days of receiving NMFS' comments. Caltrans must receive final NMFS agreement for the design and grading plan prior to implementation of the proposed action. The final and subsequent iterative versions of the grading plan shall be sent to Jay Ogawa, NMFS, 501 W. Ocean Blvd., Suite 4200, Long Beach, California 90802-4213.	Both
28	Erosion control or sediment detention devices (e.g., temporary settling basin) shall be installed prior to the time of construction activities and incorporated into Caltrans maintenance activities. These devices shall be in place during construction activities for the purpose of minimizing sediment and sediment-water slurry input to flowing water. Sediment collected in the devices shall be disposed off-site and not allowed to reenter the creek channel.	Contractor
29	The County shall provide a copy of the 401 Water Quality Certification to the ACOE prior to initiating construction activities in the waters of the U.S.	County
30	The permittee shall clearly mark the limits of the workspace with flagging or similar means to ensure mechanized equipment does	Both

	not enter preserved waters of the U.S. and riparian/wetland habitat areas as described in the 404 permit application. Adverse impacts to waters of the U.S. beyond the Corps-approved construction footprint are not authorized. Such impacts could result in permit suspension and revocation, administrative, civil or criminal penalties, and/or substantial, additional, compensatory mitigation requirements.	
31	All work performed within waters of the State shall be completed in a manner that minimizes impacts to beneficial uses and habitat. Measures shall be employed to minimize land disturbances that will adversely impact the water quality of waters of the State. Disturbance or removal of vegetation shall not exceed the minimum necessary to complete project implementation.	Both
32	No construction activities shall be conducted below top of creek banks or in other waters of the State from November 1 – May 30 unless prior written approval has been obtained from Central Coast Water Board staff. Requests to conduct construction activities below top of creek banks or in other waters of the State during the winter period shall be submitted to Central Coast Water Board staff at least 21 days prior to the planned winter period work date.	Both
33	Erosion and sediment control measures shall be on site prior to the start of construction and kept on site at all times so they are immediately available for installation in anticipation of rain events.	Contractor
34	The applicant shall implement and maintain an effective combination of erosion and sediment control measures (e.g., revegetation, fiber rolls, erosion control blankets, hydromulching, compost, straw with tackifiers, temporary basins) to prevent erosion and capture sediment. No synthetic plastic mesh products shall be used in any erosion control materials. The applicant shall implement and maintain washout, trackout, dust control, and any other applicable source control BMPs.	Contractor
35	Erosion and sediment control measures and other construction BMPs shall be implemented and maintained in accordance with all specifications governing their proper design, installation, operation, and maintenance.	Contractor
36	The applicant shall not conduct construction activities below top of creek banks or in other waters of the State during rain events. The applicant shall implement effective erosion control, sediment control, and other protective measures prior to the start of any rain events. If work below top of creek banks or in other waters of the State is allowed during the time period between October 1 and May 30, the applicant shall not conduct construction activities below top of creek banks or in other waters of the State on any day for which the National Weather Service has predicted a 25% or more chance of at least 0.1 inch rain in 24 hours. In preparation for any such predicted rain event between October 1 and May 30, the Applicant shall install effective erosion control, sediment control, and other protective measures no later than the day prior to the predicted rain event. Construction activities below top of creek banks or in other waters of the State may resume after the rain has ceased, the National Weather Service predicts clear weather, and site	Both

	conditions are dry enough to continue work without discharge of sediment or other pollutants from the project site.	
37	Any material stockpiled that is not actively being used during construction shall be covered with plastic unless reserved for seed banking, which requires alternative erosion and dust control BMPs.	Contractor
38	The applicant shall retain a spill plan and appropriate spill control and clean up materials (e.g., oil absorbent pads) onsite in case spills occur.	Contractor
39	Only Service-approved biologists will participate in activities associated with the capture, handling, and monitoring of California red-legged frogs. Biologists authorized under the FHWA biological opinion (BO) do not need to re-submit their qualifications for subsequent projects conducted pursuant to that BO, unless the Service has revoked their approval at any time during the life of the BO.	County
40	Ground disturbance will not begin until written approval is received from the Service that the biologist is qualified to conduct the work, unless the individual(s) has/have been approved previously and the Service has not revoked that approval.	County
41	A Service-approved biologist will survey the project site no more than 48 hours before the onset of work activities. If any life stage of the California red-legged frog (CRLF) is found and these individuals are likely to be killed or injured by work activities, the approved biologist will be allowed sufficient time to relocate the CRLF the shortest distance possible to a location that contains suitable habitat and that will not be affected by activities associated with the proposed project. The relocation site should be in the same drainage to the extent practicable. Caltrans will coordinate with the Service on the relocation site prior to the capture of any CRLF.	County
42	Before any activities begin, a Service-approved biologist will conduct a training session for all construction personnel. At a minimum, the training will include a description of the CRLF and its habitat, the specific measures that are being implemented to conserve the CRLF for the project, and the boundaries within which the project may be accomplished. Brochures, books, and briefings may be used in the training session, provided that a qualified person is on hand to answer any questions.	County
43	The number of access routes, size of staging areas, and the total area of the activity will be limited to the minimum necessary to achieve the project goals. Environmentally Sensitive Areas will be delineated to confine access routes and construction areas to the minimum area necessary to complete construction, and minimize the impact to CRLF habitat; this goal includes locating access routes and construction areas outside of wetlands and riparian areas to the maximum extent practicable.	Both
44	Work activities should be scheduled for times of the year when impacts to the CRLF would be minimal. For example, work that would affect large pools that may support breeding would be avoided, to the maximum degree practicable, during the breeding season (November through May). Isolated pools that are important to maintain CRLF through the driest portions of the year would be	Both

	avoided, to the maximum degree practicable, during the late summer and early fall. Habitat assessments, surveys, and coordination between Caltrans and the Service during project planning will be used to assist in scheduling work activities to avoid sensitive habitats during key times of the year.	
45	If a work site is to be temporarily dewatered by pumping, intakes will be completely screened wit wire mesh not larger than 0.2 inch to prevent CRLF from entering the pump system. Water will be released or pumped downstream at an appropriate rate to maintain downstream flows during construction. Upon completion of construction activities, any diversions or barriers to flow will be removed in a matter that would allow flow to resume with the least disturbance to the substrate. Alteration of the stream bed will be minimized to the maximum extent possible; any imported material will be removed from the stream bed upon completion of the project.	Both
46	Unless approved by the Service, water will not be impounded in a manner that may attract CRLF.	Both
47	All oak trees identified to remain shall not be removed. Unless previously approved by the County, the following activities are not allowed within the root zone of existing or newly planted oak trees: year-round irrigation (no summer watering, unless “establishing” new tree or native compatible plant(s) for up to three years); grading (includes cutting and filling of material); compaction (e.g., regular use of vehicles); placement of impermeable surfaces (e.g., pavement); disturbance of soil that impacts roots (e.g., tilling).	Both
48	During construction, the project will make all reasonable efforts to limit the use of imported soils for fill. Soils currently existing on-site should be used for fill material. If the use of imported fill material is necessary, the imported material must be obtained from a source that is known to be free of invasive plant species; or the material must consist of purchased clean material such as crushed aggregate, sorted rock, or similar.	Contractor
49	To avoid the spread of invasive species, the contractor shall: a. Stockpile topsoil and redeposit the stockpiled soil on the slopes after construction of the new bridge is complete; or b. Transport the topsoil to a certified landfill for disposal.	Contractor
50	All erosion control materials including straw bales, straw wattles, or mulch used on-site must be free of invasive species seed.	Both
51	Prior to construction, a component including a description of South-Central California Coast steelhead, its ecology, its legal status, and the need for conservation of the species shall be integrated into a worker environmental training program. All construction personnel conducting in-stream work shall participate in the training program conducted by a qualified biologist.	Both
52	In-stream work shall take place between June 1 and October 31 in any given year, when the surface water within Tar Spring Creek is likely to be at seasonal minimum. Deviations from this work window will only be made with permission from the relevant regulatory agencies.	Both

DURING CONSTRUCTION		
53	During in-stream work, a qualified biologist shall be retained with experience in steelhead biology and ecology, aquatic habitats, biological monitoring (including diversion/dewatering), and capturing, handling, and relocating fish species. During in-stream work, the biological monitor(s) shall continuously monitor placement and removal of any required stream diversions to capture stranded steelhead and other native fish species and relocate them to suitable habitat, as appropriate. The biologist(s) shall capture steelhead stranded as a result of diversion/dewatering and relocate steelhead to suitable instream habitat immediately downstream of the work area. The biologist shall note the number of steelhead observed in the affected area, the number of steelhead relocated, and the date and time of the collection and relocation.	County
54	The County recognizes that trimming of oaks can be detrimental in the following respects and agrees to minimize trimming of the remaining oaks: removal of larger lower branches should be minimized to 1) avoid making tree top heavy and more susceptible to “blow-overs”, 2) reduce having larger limb cuts that take longer to heal and are much more susceptible to disease and infestation, 3) retain the wildlife that is found only in the lower branches, 4) retains shade to keep summer temperatures cooler (retains higher soil moisture, greater passive solar potential, provides better conditions for oak seedling volunteers) and 5) retain the natural shape of the tree. Limit the amount of trimming (roots or canopy) done in any one season as much as possible to limit tree stress/shock (10% or less is best, 25% maximum). Excessive and careless trimming not only reduces the potential life of the tree, but can also reduce property values if the tree dies prematurely or has an unnatural appearance. If trimming is necessary, the applicant agrees to either use a skilled arborist or apply accepted arborist's techniques when removing limbs.	Both
55	Smaller trees (smaller than 5 inches in diameter at 4 feet above the ground) within the project area are considered to be of high importance, and when possible, shall be given similar consideration as larger trees.	Both
56	Reduce the amount of the disturbed area where possible.	Contractor
57	Use water trucks or sprinkler systems in sufficient quantities to prevent airborne dust from leaving the site. An adequate water supply source must be identified. Increased watering frequency would be required whenever wind speeds exceed 15 mph. Reclaimed (nonpotable) water should be used whenever possible.	Contractor
58	All dirt stockpile areas should be sprayed daily as needed, covered, or an APCD approved alternative method will be used.	Contractor
59	Vehicle speed for all construction vehicles shall not exceed 15 mph on any unpaved surface at the construction site.	Contractor

60	All trucks hauling dirt, sand, soil, or other loose materials are to be covered or should maintain at least two feet of freeboard (minimum vertical distance between top of load and top of trailer) in accordance with CVC Section 23114.	Contractor
61	During Project activities, all trash that may attract predators shall be properly contained, removed from the work site and disposed of regularly. Following construction, all trash and construction debris shall be removed from work areas. All vegetation removed from the construction site shall be taken to a certified landfill to prevent the spread of invasive species.	Contractor
62	During construction, no pets will be allowed on the construction site.	Both
63	Pile driving with impact hammers shall be limited to the low flow period between June 15 and October 15, thus avoiding adult steelhead spawning migration and peak smolt emigration.	Both
64	When driving piles within 26 horizontal feet of surface water, the contractor will limit the number of daily strikes to 1500.	Contractor
65	All fueling and maintenance of vehicles and other equipment and staging areas shall occur at least 20 meters from any riparian habitat or water body. The County shall ensure contamination of habitat does not occur during such operations.	Contractor
66	During construction, if the work site is to be temporarily dewatered by pumping, intakes shall be completely screened with wire mesh not larger than five millimeters (5 mm) to prevent California red-legged frogs and steelhead from entering the pump system. Water shall be released or pumped downstream at an appropriate rate to maintain downstream flows during construction. Upon completion of construction activities, any barriers to flow shall be removed in a manner that would allow flow to resume with the least disturbance to the substrate.	Contractor
67	All work will be conducted in accordance to CAL-OSHA and EPA regulations.	Contractor
68	Caltrans' biologist shall contact NMFS (Jay Ogawa, 562-980-4061) immediately if one or more steelhead are found dead or injured. The purpose of the contact shall be to review the activities resulting in take and to determine if additional protective measures are required. All steelhead mortalities shall be retained, frozen as soon as practical, and placed in an appropriate-sized sealable bag that is labeled with the date and location of the collection and fork length and weight of the specimen(s). Frozen samples shall be retained by the biologist until additional instructions are provided by NMFS. Subsequent notification must also be made in writing to Jay Ogawa, NMFS, 501 W. Ocean Blvd., Suite 4200, Long Beach, California 90802-4213 within five days of noting dead or injured steelhead. The written notification shall include 1) the date, time, and location of the carcass or injured specimen; 2) a color photograph; 3) cause of injury or death; and 4) name and affiliation of the person who found the specimen.	County
69	Caltrans' biological monitor shall monitor sound levels during pile driving activities to ensure that levels at the streams edge and underwater are not higher than the anticipated peak SPL and cumulative SEL described in the biological assessment. Pile driving	County

	shall be monitored at a minimum of 3 locations, approximately 26-feet away from the pile being driving and immediately upstream and downstream of the dewatered work area. If sound levels at the streams edge or underwater are higher than those proposed (SPL of 172 dB and SEL of 151 dB), the biologist shall be empowered to halt work and will contact NMFS (Jay Ogawa, 562-980-4061) immediately and prior to continuing pile driving activities. The purpose of the contact is to identify possible pile-driving modifications that would be implemented to reduce noise to levels that are not harmful to steelhead.	
70	Caltrans' biological monitor shall monitor all construction activities, instream habitat, and performance of sediment control devices for the purpose of identifying and reconciling any condition that could adversely affect steelhead or their habitat. The biologist shall be empowered to halt work activity and to recommend measures for avoiding adverse effects to steelhead and their habitat. The biological monitor shall immediately contact NMFS (Jay Ogawa, 562-980-4061) upon making a determination that unforeseen effects have occurred, which could have an adverse effect on steelhead or aquatic habitat not previously considered.	County
71	Heavy equipment shall be positioned away from the creek at the end of each workday. When feasible the use of heavy equipment shall be performed from upland areas or the roadway. All heavy equipment shall be checked for leaks of oil, gas, hydraulic fluid and any other pollutant which could impact water quality and instream habitat each workday prior to being deployed into the creek. Such leaks shall be controlled for the purpose of avoiding water-quality impacts to surface water.	Contractor
72	All materials and debris related to bridge demolition and construction shall be removed from the creek channel bed and riparian zone as soon as possible and in no instance later than November 1.	Contractor
73	Pursuant to 36 C.F.R. section 800.13, in the event of any discoveries of either human remains, archeological deposits, or any other type of historic property during construction, the permittee shall notify the Corps Regulatory Division Staff (Theresa Stevens, Ph.D., 805-585-2146) and Corps' Archeology Staff within 24 hours (Steve Dibble at 213-452-3849 or John Killeen at 213-452-3861). The permitee shall immediately suspend all work in area(s) where potential cultural resources are discovered and not resume construction in the area surrounding the potential cultural resources until the Corps Regulatory Division re-authorizes project construction, per 36 C.F.R. section 800.13.	Both
74	The Applicant shall confine all trash and debris in appropriate enclosed bins and dispose of the trash and debris at an approved site at least weekly.	County
75	All construction vehicles and equipment used on site shall be well maintained and checked daily for fuel, oil, and hydraulic fluid leaks or other problems that could result in spills of toxic materials.	Contractor
76	The Applicant shall designate a staging area for equipment and vehicle fueling and storage at least 100 feet away from waterways,	Contractor

	in a location where fluids or accidental discharges cannot flow into waterways.	
77	All vehicle fueling and maintenance activity shall occur at least 100 feet away from waterways, and in designated staging areas.	Contractor
78	Dewatering and diversion activities shall be conducted in accordance with the Tar Spring Creek Bridge on Branch Mill Road: Bridge Replacement Project Diversion and Dewatering Plan dated June 2014.	Contractor
79	Stream diversion dams shall be constructed of gravel bags wrapped in heavy plastic sheeting. Gravel bags shall be filled only with clean gravel.	Contractor
80	Applicant shall ensure that the sump discharge from diversion and dewatering activities matches the downstream flow to prevent erosion.	Contractor
81	Applicant shall ensure that any sediment that builds up at the diversion dams shall not be released into flows when the dams are removed.	Contractor
82	Central Coast Water Board staff shall be notified if mitigations as described in the 401 Water Quality Certification application for this project are altered by the imposition of subsequent permit conditions by any local, state or federal regulatory authority. The Applicant shall inform Central Coast Water Board staff of any modifications that interfere with compliance with project Certification.	County
83	A Service-approved biologist will be present at the work site until all CRLF have been relocated out of harm's way, workers have been instructed, and disturbance of habitat has been completed. After this time, the biologist will designate a person to monitor on-site compliance with all minimization measures. The Service-approved biologist will ensure that this monitor receives the training outlined in measure 4 above and in the identification of CRLF. If the monitor or the Service-approved biologist recommends that work be stopped because CRLF would be affected in a manner not anticipated by Caltrans and the Service during review of the proposed action, they will notify the resident engineer immediately. The resident engineer will either resolve the situation by eliminating the adverse effect immediately or requiring that all actions causing these effects be halted. If work is stopped, the Service will be notified as soon as possible.	Both
84	During project activities, all trash that may attract predators will be properly contained, removed from the work site, and disposed of regularly. Following construction, all trash and construction debris will be removed from work area.	Both
85	All refueling, maintenance, and staging of equipment and vehicles will occur at least 65 feet from riparian habitat or water bodies and in a location from where a spill would not drain directly toward aquatic habitat (e.g., on a slope that drains away from the water). The monitor will ensure contamination of habitat does not occur during such operations. Prior to the onset of work, Caltrans will ensure that a plan is in place for prompt and effective response to any accidental spills. All workers will be informed of the importance	Both

	of preventing spills and of the appropriate measures to take should a spill occur.	
86	To control sedimentation during and after project implementation, Caltrans and the County will implement best management practices outlined in any authorizations or permits issued under the authorities of the Clean Water Act received for the project. If BMPs are ineffective, Caltrans will attempt to remedy the situation immediately, in coordination with the Service.	Both
87	A Service-approved biologist will permanently remove any individuals of non-native species, such as bullfrogs (*Lithobates catesbeiana*), signal and red swamp crayfish (*Pacifasticus leniusculus; Procambarus clarkii*), and centrachid fishes from the project area, to the maximum extent possible. The Service-approved biologist will be responsible for ensuring his or her activities are in compliance with the California Fish and Game Code.	County
88	To ensure that diseases area not conveyed between work sites by the Service-approved biologist, the fieldwork code of practice developed by the Declining Amphibian Population Task Force will be followed at all times. A copy of the code of practice is enclosed.	County
POST- CONSTRUCTION		
89	The County will conduct surveys at the project site (minimum of 1 a year) for a minimum of 5 years as a part of standard mitigation reporting requirements. During these surveys, staff will note any noticeable changes within the channel that could progress into fish passage issues. If such changes occur, the County will coordinate with CDFW, Caltrans, and NMFS to determine feasible and implementable measures to rectify any possible fish passage issues.	County
90	Permanent dust control measures identified in the approved project revegetation plans should be implemented as soon as possible following completion of any soil disturbing activities.	Contractor
91	Exposed ground areas that will be reworked at dates greater than one month after initial grading should be sown with a fast-germinating non-invasive grass seed and watered until vegetation is established.	Both
92	All disturbed soil areas not subject to revegetation should be stabilized using approved chemical soil binders, jute netting, or other methods approved in advance by the APCD.	Contractor
93	Caltrans' biological monitor shall provide a written fish relocation report to NMFS within 30 working days following completion of the proposed action. The report shall include 1) the number and size of any and all steelhead relocated during the proposed action or fish relocation; 2) the date and time of the collection and relocation site; 3) a description of any problem encountered during the project or when implementing terms and conditions; and 4) any effect of the proposed action on steelhead that was not previously considered. The report should be sent to Jay Ogawa, NMFS, 501 W. Ocean Blvd., Suite 4200, Long Beach, California 90802-4213.	County

94	Caltrans shall establish photo-monitoring sites of the channel thalweg within 30 calendar days following completion of the proposed action. Caltrans shall conduct surveys once a year for the 5 years following completion of the proposed action. The surveys shall be performed concurrently to the proposed vegetation monitoring that is scheduled after a large storm event. All survey results should be submitted as soon as they become available to Jay Ogawa, NMFS, 501 W. Ocean Blvd., Suite 4200, Long Beach, California 90802-4213. The survey shall start 400-feet downstream of the bridge and end 300-feet upstream of the Branch Mill Road Bridge. The survey shall possess sufficient detail to capture channel geometry and slope for the purpose of ensuring the proposed action does not reduce fish-passage conditions or degrade existing aquatic habitat. Items to be monitored include: i. The formation of a low-flow fish passage channel throughout the action area. ii. The amount and extent of erosion and deposition within or immediately upstream or downstream of the action area. iii. The formation of a head-cut as a result of eliminating the concrete weir structures. iv. The condition of the surveyed reach over time through the establishment of photo-reference sites.	County
95	Caltrans or their authorized biologist shall provide a revegetation report that is to include a description of the locations seeded or planted, the area revegetated, proposed methods to monitor and maintain the revegetated area, criteria used to determine the success of the plantings, and pre- and post-planting color photographs of the revegetated area. The revegetation report shall be sent to Jay Ogawa, NMFS, 501 W. Ocean Blvd., Suite 4200, Long Beach, California 90802-4213, within 30 calendar days following completion of the proposed action.	County
96	Caltrans of their authorized biologist shall provide the results of the vegetation monitoring within 30 calendar days following completion of the annual site inspections for the 5 years following completion of the project as described in the HMMP. The report shall include color photographs taken of the project area during each inspection and before and after implementation of the proposed action. The vegetation monitoring results shall be sent to Jay Ogawa, NMFS, 501 W. Ocean Blvd., Suite 4200, Long Beach, California 90802-4213, within 30 calendar days following the completion of the site inspection.	County
97	Within 45 calendar days of completion of authorized work in waters of the U.S., the permittee shall submit to the Corps of Regulatory Division a post-project implementation memorandum including the following information: • Dates work within waters of the U.S. was initiated and completed; • Summary of compliance status with each special condition of this permit (including any noncompliance that previously occurred or is currently occurring and corrective actions	Both

	taken or proposed to achieve compliance); • Color photographs (including map of photopoints) taken at the project site before and after construction for those aspects directly associated with permanent impacts to waters of the U.S. such that the extent of authorized fills can be verified; • One copy of "as built" drawings for the entire project. Electronic submittal is preferred. All sheets must be signed, dated, and to scale. If submitting paper copies, sheets must be no larger than 11x17 inches and; • Signed Certification of Compliance.	
98	Within 45 calendar days of complete installation of all mitigation, the permittee shall submit to the Corps Regulatory Division a memorandum including the following information: a) Dates all mitigation was installed and monitoring was initiated; b) Schedule for future mitigation monitoring and reporting pursuant to the final, Corps-approved mitigation plan; c) Color photographs (including a map of photopoints) taken at each mitigation site before and after installation such that correct installation per final, Corps-approved mitigation plan can be verified; and d) One copy of "as built" drawings for the entire project. Electronic submittal is preferred. All sheets must be signed, dated, and to scale. If submitting paper copies, sheets must be no larger than 11x17 inches.	Both
99	The permittee shall ensure waters of the U.S. within the permit area are restored to pre-project alignments, elevation contours, and conditions, including revegetation with appropriate native plant species, as described in the final *Branch Mill at Tar Spring Creek Highway Bridge Replacement Project – Habitat Mitigation and Monitoring Plan* (dated April 2014). At a minimum, the acreage of waters of the U.S. and aquatic resource functions of each site shall equal or exceed pre-project acreage of waters of the U.S. and aquatic resource functions by the end of the monitoring period as specified in the plan. Functions for the above impact areas shall be assessed annually using a Corps-approved functional/condition assessment method. The permittee's responsibility to complete the required restoration as set forth in this special condition shall not be considered fulfilled until the permittee has met or exceeded all final performance standards for each impact area and has obtained written confirmation from the Corps verifying successful restoration. Note: if not done previously as a part of permit application evaluation process, the prior to initiating construction in sites with waters of the U.S. subject to authorized, temporary impacts, the permittee shall conduct a functional/condition assessment to establish pre-project (baseline) functions at each impact site.	Both
100	All construction-related equipment, materials, and any temporary BMPs no longer needed shall be removed and cleaned from the site upon completion of the project.	Contractor

101	The Applicant shall conduct the following monitoring: 1. Visually inspect the project site and areas of waters of the State adjacent to project impact areas following completion of project construction and for five subsequent rainy seasons to ensure that the project is not causing excessive erosion, stream instability, or other water quality problems. If the project does cause water quality problems, contact the Central Coast Water Board staff member overseeing the project. You will be responsible for obtaining any additional permits necessary for implementing plans for restoration to prevent further water quality problems. 2. Prior to implementation of the dewatering/diversion plan, Applicant shall conduct baseline monitoring to determine turbidity levels at the proposed project site. 3. Monitor the compensatory mitigation site for five years. If success criteria are not achieved within that time, continue annual monitoring and maintenance until success criteria are achieved. Compensatory mitigation monitoring shall include assessment of growth, survival, percent cover, general health and stature, signs of reproduction, progress towards achieving success criteria, and any other measures identified in the Branch Mill at Tar Spring Creek Highway Bridge Replacement Project Habitat Mitigation and Monitoring Plan dated April 2014.	County
102	The Applicant shall provide the following reporting to RB3_401Reporting@waterboards.ca.gov: Project Commencement Notification - Contact Central Coast Water Board staff when the project begins to allow for a site visit. 1. Project Commencement Notification - Contact Central Coast Water Board staff when the project begins to allow for a site visit. 2. Streambed Alteration Agreement - Submit a signed copy of the Department of Fish and Wildlife's streambed alteration agreement to the Central Coast Water Board immediately upon execution and prior to any discharge to waters of the State. 3. Project Completion Report - Within 30 days of project completion, submit a project completion report that contains: a. Date of construction initiation; b. Date of construction completion; c. Status of post-construction BMPs; d. A summary of daily activities, monitoring and inspection observations, and problems incurred and actions taken; 4. Clearly identified photo-documentation of all areas of permanent and temporary impact, prior to and after project construction; 5. Clearly identified representative photo-documentation of other project areas, prior to and after project construction; and	County

6. Photo-documentation of all permanent post-construction BMPs.
7. Annual Report – The Applicant shall submit to the Central Coast Water Board an Annual Report by May 31 of each year following the issuance of this Certification, regardless of whether project construction has started or not. The Applicant shall submit Annual Reports until the Applicant has conducted all required monitoring, mitigation has achieved all success criteria, and the Applicant has notified the Central Coast Water Board of mitigation completion. Each Annual Report shall include at a minimum:
    a. The status of the project: construction not started, construction started, or construction complete.
    b. The date of construction initiation, if applicable.
    c. The date of construction completion, if applicable.
    d. If project construction is complete, a description of the results of the annual visual inspection of the project site and areas of waters of the State adjacent to project impact areas, including:
        i. Erosion conditions;
        ii. Stream stability conditions;
        iii. Water quality and beneficial use conditions;
        iv. Representative photographs of the project site and areas of waters of the State adjacent to project impact areas; and
        v. If the visual inspection monitoring period is over, but water quality problems persist, the Annual Report shall identify corrective measures to be undertaken, including extension of the monitoring period until the project is no longer causing excessive erosion, stream instability, or other water quality problems.
        vi. If project construction is complete, a description and analysis of the results of the annual visual inspection of the project site and areas of waters of the State adjacent to project impact areas. Include an assessment of the stability of the channel banks, an assessment of any scour visible on the creek banks, an assessment of the channel thalweg for any signs of head cuts or nick points, and an assessment of any accumulation of sediment. Provide representative photographs of the geomorphic conditions of the project site and areas of waters of the State adjacent to project impact areas. Also include identification of likely causes of any instability and potential corrective actions to correct the instability.
    e. Mitigation reporting, if mitigation installation has started, including the following information:
        i. Date of initiation of mitigation installation and

	date mitigation installation was completed; ii. If mitigation installation was completed, confirmation mitigation was installed according to the requirements of this Certification and as described in the application, Branch Mill at Tar Spring Creek Highway Bridge Replacement Project Habitat Mitigation and Monitoring Plan dated April 2014, and any other associated submittals; iii. Analysis of monitoring data collected in the field; iv. Quantification of growth, percent cover, survival, general health and stature, signs of reproduction, and documentation of progress toward achieving all mitigation performance criteria; v. Qualitative and quantitative comparisons of current mitigation conditions with preconstruction conditions and previous mitigation monitoring results; vi. Any remedial or maintenance actions taken or needed; vii. Any additional information specified in Branch Mill at Tar Spring Creek Highway Bridge Replacement Project Habitat Mitigation and Monitoring Plan dated April 2014; and viii. Annual photo-documentation representative of all mitigation areas, taken from vantage points from which Central Coast Water Board staff can identify changes in size and cover of plants. Compare photos of installed mitigation with photos of the mitigation areas prior to installation. f) A description of mitigation completion status, that identifies the amount of mitigation monitoring and maintenance remaining, or certifies that mitigation is complete and all required mitigation monitoring and maintenance has been conducted and all success criteria achieved. If the monitoring period is over, but all success criteria have not been achieved, the Annual Report shall identify corrective measures to be undertaken, including extension of the monitoring period until the criteria are met.	
103	Habitat contours will be returned to their original configuration at the end of project activities. This measure will be implemented in all areas disturbed by activities associated with the project, unless the Service and Caltrans determine that it is not feasible or modification of original contours would benefit the CRLF.	Both
104	If Caltrans demonstrates that disturbed areas have been restored to conditions that allow them to function as habitat for CRLF, these areas will not be included in the amount of total habitat permanently disturbed.	County
105	Project sites will be re-vegetated with an assemblage of native riparian, wetland, and upland vegetation suitable for the area. Locally collected plant materials will be used to the extent	County

	practicable. Invasive, exotic plants will be controlled to the maximum extent practicable. During construction, the biological monitor(s) will ensure that the spread or introduction of invasive exotic plant species is avoided to the maximum extent possible. When practicable, invasive exotic plants in the project site will be removed and properly disposed. This measure will be implemented in all areas disturbed by activities associated with the project, unless the Service and Caltrans determine that it is not feasible or practical.	
106	Herbicides will not be used as the primary method used to control invasive, exotic plants. However, if Caltrans determines that the use of herbicides is the only feasible method for controlling invasive plants at a specific project site, it will implement the following additional protective measures for the CRLF: a. Caltrans will not use herbicides during the breeding season for the CRLF; b. Caltrans will conduct surveys for CRLF immediately prior to the start of any herbicide use. If found, CRLF will be relocated to suitable habitat far enough from the project area that no direct contact with herbicides would occur; c. Giant reed and other invasive plants will be cut and hauled out by hand and then painted with glyphosate or glyphosate-based products, such as Aquamaster® or Rodeo®; d. Licensed and experienced Caltrans staff or a licensed and experienced contractor will use a hand-held sprayer for foliar application of Aquamaster® or Rodeo® where large monoculture stands occur at an individual project site; e. All precautions will be taken to ensure that no herbicide is applied to native vegetation; f. Herbicides will not be applied on or near open water surfaces (no closer than 60 feet from open water); g. Foliar applications of herbicide will not occur when wind speeds are in excess of 3 miles per hour; h. No herbicides will be applied within 24 hours of forecasted rain; i. Application of all herbicides will be done by a qualified Caltrans staff or contractor to ensure that overspray is minimized, that all application is made in accordance with label recommendations, and with implementation of all required and reasonable safety measures. A safe dye will be added to the mixture to visually denote treated sites. Application of herbicides will be consistent with the U.S. EPA's Office of Pesticide Programs, Endangered Species Protection Program county bulletins; and j. All herbicides, fuels, lubricants, and equipment will be stored, poured, or refilled at least 60 feet from riparian habitat or water bodies in a location where a spill would not drain directly toward aquatic habitat. Caltrans will ensure that contamination of habitat does not occur during such operations. Prior to the onset of work, Caltrans will ensure	Both

	that a plan is in place for prompt and effective response to accidental spills. All workers will be informed of the importance of preventing spills and of the appropriate measures to take should a spill occur.	
107	Upon completion of the project, Caltrans will ensure that a Project Completion Report is completed and provided to the Ventura Fish and Wildlife Office. A copy of the form is enclosed. Caltrans should include recommended modifications of the protective measures if alternative measures would facilitate compliance with the provisions of the consultation.	County
108	Location of newly planted trees should adhere to the following, whenever possible: on the north side of and at the canopy/dripline edge of existing mature native trees; on northfacing slopes; on the creek banks; where topsoil is present; and away from continuously wet areas (e.g., at least 15 feet uphill of the creek OHWM).	County
109	The HMMP shall provide for the maintenance of the planted trees until they are successfully established. This shall include protection (e.g. tree shelters, caging) from animals (e.g., deer, rodents), regular weeding (minimum of once early fall and once early spring) of at least a 3-foot radius out from plant and adequate watering (e.g., dripirrigation system). Watering should be controlled so only enough is used to initially establish the tree, and reducing to zero over a three-year period. If possible, planting during the warmest, driest months (June through September) shall be avoided. In addition, standard planting procedures (e.g., planting tablets, initial deep watering) shall be used.	County
110	Replanting shall be completed as soon as it is feasible (e.g. irrigation water is available, grading done in replant area). Replant areas shall be either in native topsoil or areas where native topsoil has been reapplied. If the latter, top soil shall be carefully removed and stockpiled for spreading over graded areas to be replanted (set aside enough for a 6- to 12-inch layer).	County

Branch Mill Road Bridge Replacement Project
ED12-063 / WBS 300385

MITIGATED NEGATIVE DECLARATION, NOTICE OF DETERMINATION, & INITIAL STUDY

COUNTY OF SAN LUIS OBISPO
DEPARTMENT OF PLANNING AND BUILDING
ENVIRONMENTAL & RESOURCE MANAGEMENT DIVISION

Initial Study Summary – Environmental Checklist

SAN LUIS OBISPO COUNTY DEPARTMENT OF PLANNING AND BUILDING
976 OSOS STREET • ROOM 200 • SAN LUIS OBISPO • CALIFORNIA 93408 • (805) 781-5600
Promoting the Wise Use of Land • Helping to Build Great Communities

(ver 5.0)

Project Title & No. **Public Works - Branch Mill Road Bridge Replacement Project ED12-063 (300385)**

ENVIRONMENTAL FACTORS POTENTIALLY AFFECTED: The proposed project could have a "Potentially Significant Impact" for at least one of the environmental factors checked below. Please refer to the attached pages for discussion on mitigation measures or project revisions to either reduce these impacts to less than significant levels or require further study.

☐ Aesthetics	☐ Geology and Soils	☐ Recreation
☒ Agricultural Resources	☒ Hazards/Hazardous Materials	☐ Transportation/Circulation
☐ Air Quality	☐ Noise	☐ Wastewater
☒ Biological Resources	☐ Population/Housing	☒ Water /Hydrology
☐ Cultural Resources	☐ Public Services/Utilities	☐ Land Use

DETERMINATION: (To be completed by the Lead Agency)

On the basis of this initial evaluation, the Environmental Coordinator finds that:

☐ The proposed project COULD NOT have a significant effect on the environment, and a NEGATIVE DECLARATION will be prepared.

☒ Although the proposed project could have a significant effect on the environment, there will not be a significant effect in this case because revisions in the project have been made by or agreed to by the project proponent. A MITIGATED NEGATIVE DECLARATION will be prepared.

☐ The proposed project MAY have a significant effect on the environment, and an ENVIRONMENTAL IMPACT REPORT is required.

☐ The proposed project MAY have a "potentially significant impact" or "potentially significant unless mitigated" impact on the environment, but at least one effect 1) has been adequately analyzed in an earlier document pursuant to applicable legal standards, and 2) has been addressed by mitigation measures based on the earlier analysis as described on attached sheets. An ENVIRONMENTAL IMPACT REPORT is required, but it must analyze only the effects that remain to be addressed.

☐ Although the proposed project could have a significant effect on the environment, because all potentially significant effects (a) have been analyzed adequately in an earlier EIR or NEGATIVE DECLARATION pursuant to applicable standards, and (b) have been avoided or mitigated pursuant to that earlier EIR or NEGATIVE DECLARATION, including revisions or mitigation measures that are imposed upon the proposed project, nothing further is required.

Katie Drexhage			7/25/13
Prepared by (Print)	Signature		Date
Steven McMasters		Ellen Carroll, Environmental Coordinator (for)	7/25/13
Reviewed by (Print)	Signature		Date

Project Environmental Analysis

The County's environmental review process incorporates all of the requirements for completing the Initial Study as required by the California Environmental Quality Act (CEQA) and the CEQA Guidelines. The Initial Study includes staff's on-site inspection of the project site and surroundings and a detailed review of the information in the file for the project. In addition, available background information is reviewed for each project. Relevant information regarding soil types and characteristics, geologic information, significant vegetation and/or wildlife resources, water availability, wastewater disposal services, existing land uses and surrounding land use categories and other information relevant to the environmental review process are evaluated for each project. Exhibit A includes the references used, as well as the agencies or groups that were contacted as a part of the Initial Study. The County Planning Department uses the checklist to summarize the results of the research accomplished during the initial environmental review of the project.

Persons, agencies or organizations interested in obtaining more information regarding the environmental review process for a project should contact the County of San Luis Obispo Current Planning Division, Rm. 200, County Government Center, San Luis Obispo, CA, 93408-2040 or call (805) 781-5600.

A. PROJECT

DESCRIPTION: San Luis Obispo County Department of Public Works is proposing to replace the existing bridge on Branch Mill Road over Tar Spring Creek, in the southern area of San Luis Obispo County just east of Arroyo Grande. The primary purpose of the Project is to improve public safety by replacing the structurally deficient bridge, providing standard roadway widths, and adjusting the roadway alignment. The proposed replacement bridge would be an approximately 105 feet long Pre-Cast, Pre-Stressed Concrete Bulb T bridge. The abutments would be located above the ordinary high water mark (OHWM). However, rock slope protection and fill would be required in the creek banks to protect the proposed roadway approach. The Project would replace the bridge on the existing alignment. As a result the road will be closed to the public for up to 5 months in order to replace the existing bridge, and construct the new roadway approaches. A temporary bridge would be placed downstream of the new bridge to allow for farm equipment and contractor access across the creek. The Project will result in the temporary disturbance of 2.19 acres and the permanent disturbance of approximately 1.4 acres. The project is located on Branch Mill Road, approximately 1,200 feet southwest of Huasna Road, east of the City of Arroyo Grande (refer to Appendix A Vicinity and Location maps).

The existing bridge has been determined to be structurally deficient by Caltrans structure maintenance staff, making the bridge eligible for replacement under the Federal Highway Administration's Highway Bridge Program. The Branch Mill Road Bridge was constructed in 1949 and is a steel girder two-lane bridge with concrete abutments. The proposed replacement bridge would be an approximately 105 feet long Pre-Cast, Pre-Stressed Concrete Bulb T bridge. The abutments would be located above the ordinary high water mark (OHWM). However, rock slope protection and fill would be required in the creek banks to protect the proposed roadway approach. Concrete seat type abutments would be supported on deep foundations with driven 16-inch steel piles. Piles would be located on the creek banks and outside of the OHWM.

A precast structure alternative does not require false work to be placed in the creek resulting in fewer impacts to the creek banks and reduces construction duration by approximately 4 weeks, relative to cast-in-place construction, resulting in fewer impacts to traffic. The abutments would be located above the ordinary high water mark but rock slope protection will be required on the creek banks to protect the proposed roadway approach. Concrete seat type abutments would be supported on deep foundations with either driven or drilled piles. The proposed road improvements include a paved width

of 32 feet (two 12-foot lanes and 4-foot paved shoulders) and unpaved shoulders 2 feet in width along each side of the road (refer to Appendix B, plan sheet).

The Project would replace the bridge on the existing alignment. As a result the road will be closed to the public for up to 5 months in order to replace the existing bridge, and construct the new roadway approaches. A temporary bridge would be placed downstream of the new bridge to allow for farm equipment and contractor access across the creek. The temporary bridge crossing would provide safe crossing for farm equipment and keep them from having to travel through town and creating potential safety issues and additional traffic delays. During construction, portions of fields on both sides of the bridge will be unable to be used by the landowner for farming purposes for 2 of the 3 growing seasons. An existing concrete check dam which is a partial fish passage barrier will also be removed as part of the Project.

Minor roadway realignment will be required in order to improve the existing roadway geometry for a higher design speed. Minor riparian removal and fills will be required for the minor realignment and also widening of the existing approach to provide for a standard width. Staging is anticipated to occur on the existing roadway.

Branch Mill Road is on the bus route for the following schools: Arroyo Grande High School, Paulding Middle School, Branch Elementary School and various special education schools. Arrangements will need to be made to accommodate or re-route these buses during construction when school is in session.

Construction is anticipated to begin in the spring of 2015 and is anticipated to last 6 to 9 months in duration. The Project will result in the temporary disturbance of 2.19 acres and the permanent disturbance of approximately 1.4 acres

ASSESSOR PARCEL NUMBER(S): 047-161-005

Latitude: 35° 7' 58.389" Longitude: -120° 28' 21.864" **SUPERVISORIAL DISTRICT** # 4

B. EXISTING SETTING

PLANNING AREA: South County (Inland), Rural

LAND USE CATEGORY: Agriculture

COMBINING DESIGNATION(S): Flood Hazard

TOPOGRAPHY: Gently rolling

VEGETATION: Grasses; riparian , wetland

PARCEL SIZE: N/A square feet

EXISTING USES: Agricultural uses

SURROUNDING LAND USE CATEGORIES AND USES:

North: Residential Suburban; scattered residences	*East:* Agriculture; agricultural uses
South: Agriculture; undeveloped	*West:* Agriculture; agricultural uses

C. ENVIRONMENTAL ANALYSIS

During the Initial Study process, several issues were identified as having potentially significant environmental effects (see following Initial Study). Those potentially significant items associated with the proposed uses can be minimized to less than significant levels.

COUNTY OF SAN LUIS OBISPO
INITIAL STUDY CHECKLIST

1. AESTHETICS *Will the project:*	Potentially Significant	Impact can & will be mitigated	Insignificant Impact	Not Applicable
a) Create an aesthetically incompatible site open to public view?	☐	☐	☒	☐
b) Introduce a use within a scenic view open to public view?	☐	☐	☒	☐
c) Change the visual character of an area?	☐	☐	☐	☒
d) Create glare or night lighting, which may affect surrounding areas?	☐	☐	☐	☒
e) Impact unique geological or physical features?	☐	☐	☒	☐
f) Other: _____	☐	☐	☐	☐

Setting. The Project will not be visible from any major public roadway or silhouette against any ridgelines as viewed from public roadways. The Project would be directly visible by vehicles traveling on the rural Branch Mill and Huasna roads but few, if any, stationary viewers. Viewers are not expected to have highly sensitive expectations for this structure, as it would be similar in scale to the existing structure, which is somewhat degraded and visually unappealing.

The Project is considered compatible with the surrounding uses. The Project would replace an existing bridge with a similar bridge at the same location. The new bridge would be similar in size and height, but would be widened to meet standard lane and shoulder width requirements.

Impact. Widening would require right-of-way acquisitions along the bridge and approach road alignments, resulting in removal of dense vegetation within the Tar Spring Creek riparian corridor and trees southwest of Branch Mill Road. No noise barriers, signage or significant landform changes would result from the Project. The existing timber bridge railing would be replaced with a concrete barrier railing, which would be larger, bulkier, and solid, blocking partial views down into the creek as you pass over the bridge. The proposed bridge structure would be similar in scale to the existing structure. It would be built at a 3-foot higher grade than the existing structure, but would not significantly protrude into the skyline. Construction impacts would be short term, lasting approximately nine months.

The Project would replace existing structures with a bridge of similar size and scale. The Project has been designed to minimize impacts to the creek, riparian habitat, farmlands and construction impacts. No significant visual impacts are expected to occur.

Mitigation/Conclusion. Visual impacts would be mitigated through habitat restoration within and adjacent to Tar Spring Creek and restoration of construction access and staging areas. No additional visual mitigation measures are anticipated.

2. AGRICULTURAL RESOURCES
Will the project:

	Potentially Significant	Impact can & will be mitigated	Insignificant Impact	Not Applicable
a) Convert prime agricultural land, per NRCS soil classification, to non-agricultural use?	☐	☐	☒	☐
b) Convert Prime Farmland, Unique Farmland, or Farmland of Statewide Importance to non-agricultural use?	☐	☐	☒	☐
c) Impair agricultural use of other property or result in conversion to other uses?	☐	☒	☐	☐
d) Conflict with existing zoning for agricultural use, or Williamson Act program?	☐	☐	☒	☐
e) Other: _____	☐	☐	☐	☐

Setting. Project Elements. The following area-specific elements relate to the property's importance for agricultural production:

Land Use Category: Agriculture

State Classification: Not prime farmland, Prime Farmland if irrigated

Historic/Existing Commercial Crops: Yes, vegetable-rotational

In Agricultural Preserve? Yes, Arroyo Grande AG Preserve Area

Under Williamson Act contract? Yes

The soil type(s) and characteristics on the subject property include:

The U.S. Department of Agriculture Natural Resources Conservation Service (NRCS), formerly the Soil Conservation Service (SCS), has mapped eight soil series within the Project vicinity (SCS 1984) (refer to Figure 3), three of which occur in or directly adjacent to the Project area. The eight soils within the Project vicinity include map unit (MU) 111 – Camarillo sandy loam; 156 – Lopez very shaly clay loam, 30 to 75 percent slopes; 158 – Los Osos loam, 5 to 9 percent slopes; 160 - Los Osos loam, 15 to 30 percent slopes; 174 – Mocho loam, 192 – Psamments and fluvents, occasionally flooded; 194 – Riverwash; 204 – Santa Lucia shaly clay loam, 50 to 75 percent slopes. Descriptions of the three Mus that occur in or directly adjacent to the Project area are provided below.

Mocho Loam

Mocho loam is a very deep, well drained, and nearly level soil that occurs on alluvial fans and plains. This soil is formed in alluvium from sedimentary rocks and occurs at elevations ranging from 20 to 500 feet. The permeability of Mocho loam is moderately slow and the available water capacity is high to very high; surface run off is slow and erosion hazards are slight. This soil is moderately alkaline and calcareous. Mocho loam is well suited for farming; therefore, most occurrences of this soil are in cultivation. Typically, the surface layer of Mocho loam is brown loam to approximately 18 inches. Pale brown loam occurs from 18 to approximately 60 inches. By itself, Mocho loam is not considered a hydric soil. However, an unnamed inclusion in alluvial flats may meet hydric criteria 2a.

Riverwash

Riverwash includes soils found in active stream and river channels, and consists of excessively drained, water deposited sand, loamy sand, and sandy loam with varying amounts of gravel and cobbles present. Riverwash soils located in and along stream channels are generally subject to flooding during and immediately after every storm. Riverwash soils are typically excessively drained, but can be somewhat poorly drained in low lying areas. Permeability is very rapid, surface runoff is very slow, and the erosion hazard is variable. Typical inclusions include Psamments and Fluvents, and Corralitos soils. The SCS Comprehensive Hydric Soils List of San Luis Obispo County lists Riverwash and Psamments and Fluvents located in drainageways, as hydric soils. These soils have a Hydric Criteria Code of 4: soils that are frequently flooded for long or very long duration during the growing season.

Santa Lucia Shaly Clay Loam, 50 to 75 percent slopes
This very steeply sloping soil occurs on hillslopes and mountains with an elevation range of 100 to 2,500 feet. It is a moderately deep soil that is poorly drained. Permeability is moderate and the available water capacity is low to very low. The surface runoff is rapid and the potential for water erosion is high. Santa Lucia shaly clay loam is formed in residual material from sandstone or shale. Typically, the surface layer is dark gray shaly clay loam to about 17 inches. A grayish brown very shaly clay loam layer occurs from 17 to 36 inches; this layer is directly underlain by hard fractured shale. Although poorly suited for the use, areas containing Santa Lucia shaly clay loam are often used for rangelands. Santa Lucia shaly clay loam, 50 to 75 percent slopes is not considered a hydric soil.

Impact. The Project is bounded by Newsom Ridge to the south and agricultural fields to the north, west, and east. The soil is irrigated and therefore, the agricultural fields are considered prime farmland. The agricultural fields are active and utilize land up to the top-of-bank of Tar Spring Creek. The Project only encompasses small sections of agricultural land in the northern and southwestern portions of the Project site. These fields support row crops, fallow areas, and dirt roads and edges subjected to considerable disturbance. A temporary bridge would be placed downstream of the new bridge to allow for farm equipment and contractor access across the creek. The temporary bridge crossing would provide safe crossing for farm equipment and keep them from having to travel through town and creating potential safety issues and additional traffic delays. During construction, portions of fields on both sides of the bridge will be unable to be used by the landowner for farming purposes for 2 of the 3 growing seasons. Approximately 1.1 acres of agricultural fields will be temporarily impacted for these 2 growing seasons. Approximately 0.03 acre will be permanently impacted as a result of the project.

Mitigation/Conclusion. No mitigation measures are necessary beyond the measure recommended by the County Agricultural Commissioner's office, below:

[AG-1] Ensure Contractor obtains all necessary grading permits for disposal of excavated materials outside of the County ROW.

3. AIR QUALITY *Will the project:*	**Potentially Significant**	**Impact can & will be mitigated**	**Insignificant Impact**	**Not Applicable**
a) Violate any state or federal ambient air quality standard, or exceed air quality emission thresholds as established by County Air Pollution Control District?	☐		☒	☐
b) Expose any sensitive receptor to substantial air pollutant concentrations?	☐	☐	☒	☐

3. AIR QUALITY

Will the project:	Potentially Significant	Impact can & will be mitigated	Insignificant Impact	Not Applicable
c) *Create or subject individuals to objectionable odors?*	☐	☐	☒	☐
d) *Be inconsistent with the District's Clean Air Plan?*	☐	☐	☒	☐
e) *Result in a cumulatively considerable net increase of any criteria pollutant either considered in non-attainment under applicable state or federal ambient air quality standards that are due to increased energy use or traffic generation, or intensified land use change?*	☐	☐	☒	☐
GREENHOUSE GASES				
f) *Generate greenhouse gas emissions, either directly or indirectly, that may have a significant impact on the environment?*	☐	☐	☒	☐
g) *Conflict with an applicable plan, policy or regulation adopted for the purpose of reducing the emissions of greenhouse gases?*	☐	☐	☒	☐
h) *Other:* _____	☐	☐	☐	☐

Setting. The Air Pollution Control District (APCD) has developed and updated their CEQA Air Quality Handbook (2012) to evaluate project specific impacts and help determine if air quality mitigation measures are needed, or if potentially significant impacts could result. To evaluate long-term emissions, cumulative effects, and establish countywide programs to reach acceptable air quality levels, a Clean Air Plan has been adopted (prepared by APCD).

Greenhouse Gas (GHG) Emissions are said to result in an increase in the earth's average surface temperature. This is commonly referred to as global warming. The rise in global temperature is associated with long-term changes in precipitation, temperature, wind patterns, and other elements of the earth's climate system. This is also known as climate change. These changes are now thought to be broadly attributed to GHG emissions, particularly those emissions that result from the human production and use of fossil fuels.

The passage of AB32, the California Global Warming Solutions Act (2006), recognized the need to reduce GHG emissions and set the greenhouse gas emissions reduction goal for the State of California into law. The law required that by 2020, State emissions must be reduced to 1990 levels. This is to be accomplished by reducing greenhouse gas emissions from significant sources via regulation, market mechanisms, and other actions. Subsequent legislation (e.g., SB97-Greenhouse Gas Emissions bill) directed the California Air Resources Board (CARB) to develop statewide thresholds.

In March 2012, the San Luis Obispo County Air Pollution Control District (APCD) approved thresholds for GHG emission impacts, and these thresholds have been incorporated the APCD's CEQA Air

Quality Handbook. APCD determined that a tiered process for residential / commercial land use projects was the most appropriate and effective approach for assessing the GHG emission impacts. The tiered approach includes three methods, any of which can be used for any given project:

1. Qualitative GHG Reduction Strategies (e.g. Climate Action Plans): A qualitative threshold that is consistent with AB 32 Scoping Plan measures and goals; or,
2. Bright-Line Threshold: Numerical value to determine the significance of a project's annual GHG emissions; or,
3. Efficiency-Based Threshold: Assesses the GHG impacts of a project on an emissions per capita basis.

For most projects the Bright-Line Threshold of 1,150 Metric Tons CO2/year (MT CO2e/yr) will be the most applicable threshold. In addition to the residential/commercial threshold options proposed above, a bright-line numerical value threshold of 10,000 MT CO2e/yr was adopted for stationary source (industrial) projects.

It should be noted that projects that generate less than the above mentioned thresholds will also participate in emission reductions because air emissions, including GHGs, are under the purview of the California Air Resources Board (or other regulatory agencies) and will be "regulated" either by CARB, the Federal Government, or other entities. For example, new vehicles will be subject to increased fuel economy standards and emission reductions, large and small appliances will be subject to more strict emissions standards, and energy delivered to consumers will increasingly come from renewable sources. Other programs that are intended to reduce the overall GHG emissions include Low Carbon Fuel Standards, Renewable Portfolio standards and the Clean Car standards. As a result, even the emissions that result from projects that produce fewer emissions than the threshold will be subject to emission reductions.

Under CEQA, an individual project's GHG emissions will generally not result in direct significant impacts. This is because the climate change issue is global in nature. However, an individual project could be found to contribute to a potentially significant cumulative impact. Projects that have GHG emissions above the noted thresholds may be considered cumulatively considerable and require mitigation.

Bridge demolition activities may have negative air quality impacts, including issues surrounding proper handling, demolition, and disposal of asbestos or lead containing material. Notification requirements to the APCD will be required.

The Project site is not located near any mapped occurrences of Naturally Occurring Asbestos (NOA); the closest outcrop of NOA is 5 to 8 miles east of the site (Tim Fuhs, office correspondence, November 20, 2012). The Project site is not located within 1,000 feet of any sensitive receptors.

Impact. As proposed, the Project will result in the temporary disturbance of approximately 2.19 acres (95,803 square feet). This will result in the creation of construction dust, as well as short-term vehicle emissions associated with construction activities. Based on Table 2-1 of the CEQA Air Quality Handbook, the Project will not result in an exceedance of the 2.5 ton PM_{10} quarterly threshold.

Using the GHG threshold information described in the Setting section, the Project is expected to generate less than the Bright-Line Threshold of 1,150 metric tons of GHG emissions. Therefore, the Project's potential direct and cumulative GHG emissions are found to be less significant and less than a cumulatively considerable contribution to GHG emissions. Section 15064(h)(2) of the CEQA Guidelines provide guidance on how to evaluate cumulative impacts. If it is shown that an incremental contribution to a cumulative impact, such as global climate change, is not 'cumulatively considerable', no mitigation is required. Because this Project's emissions fall under the threshold established by the APCD, no mitigation is required.

The Project is consistent with the general level of development anticipated and projected in the Clean Air Plan with the inclusion of the mitigation measures discussed below.

Note: Soil Wind Erodibility Classifications on the parcel are as follows: 4-moderate; unclassified

Mitigation/Conclusion. The Project's cumulative contribution to GHG emissions is limited to construction and is relatively small and considered insignificant; therefore, no mitigation is necessary. The below standard County mitigation measures will further reduce impacts, but they are not necessary to reduce a significant impact.

[AQ-1] Reduce the amount of the disturbed area where possible.

[AQ-2] Use water trucks or sprinkler systems in sufficient quantities to prevent airborne dust from leaving the site. An adequate water supply source must be identified. Increased watering frequency would be required whenever wind speeds exceed 15 mph. Reclaimed (non-potable) water should be used whenever possible.

[AQ-3] All dirt stockpile areas should be sprayed daily as needed, covered, or an APCD approved alternative method will be used.

[AQ-4] Permanent dust control measures identified in the approved project revegetation plans should be implemented as soon as possible following completion of any soil disturbing activities.

[AQ-5] Exposed ground areas that will be reworked at dates greater than one month after initial grading should be sown with a fast-germinating non-invasive grass seed and watered until vegetation is established.

[AQ-6] All disturbed soil areas not subject to revegetation should be stabilized using approved chemical soil binders, jute netting, or other methods approved in advance by the APCD.

[AQ-7] All roadways, driveways, sidewalks, etc. to be paved should be completed as soon as possible. In addition, building pads should be laid as soon as possible after grading unless seeding or soil binders are used.

[AQ-8] Vehicle speed for all construction vehicles shall not exceed 15 mph on any unpaved surface at the construction site.

[AQ-9] All trucks hauling dirt, sand, soil, or other loose materials are to be covered or should maintain at least two feet of freeboard (minimum vertical distance between top of load and top of trailer) in accordance with CVC Section 23114.

[AQ-10] The County will submit a Notification of Demolition to the APCD 10 days prior to bridge demolition activities.

4. BIOLOGICAL RESOURCES *Will the project:*	**Potentially Significant**	**Impact can & will be mitigated**	**Insignificant Impact**	**Not Applicable**
a) Result in a loss of unique or special status species* or their habitats?	☐	☒	☐	☐

4. BIOLOGICAL RESOURCES *Will the project:*	Potentially Significant	Impact can & will be mitigated	Insignificant Impact	Not Applicable
b) Reduce the extent, diversity or quality of native or other important vegetation?	☐	☒	☐	☐
c) Impact wetland or riparian habitat?	☐	☒	☐	☐
d) Interfere with the movement of resident or migratory fish or wildlife species, or factors, which could hinder the normal activities of wildlife?	☐	☒	☐	☐
e) Conflict with any regional plans or policies to protect sensitive species, or regulations of the California Department of Fish & Game or U.S. Fish & Wildlife Service?	☐	☐	☒	☐
f) Other: _____	☐	☐	☐	☐

*** Species – as defined in Section15380 of the CEQA Guidelines, which includes all plant and wildlife species that fall under the category of rare, threatened or endangered, as described in this section.**

Setting. The following are existing elements on or near the proposed Project relating to potential biological concerns:

On-site Vegetation: The areas surrounding Tar Spring Creek are managed for agricultural production; therefore, no native vegetative communities occur outside of the creek banks. Within the creek banks, Tar Spring Creek supports a dense Central Coast riparian scrub community. Central Coast riparian scrub consists of scrubby streamside thickets, varying from open to impenetrable, dominated by any of several willow species. The understory commonly supports species such as California blackberry and stinging nettle. The Project site supports a dense tree stratum dominated by arroyo willow, the shrub stratum includes various wetland shrubs including mule fat and mugwort (*Artemisia douglasiana*), and the woody vine stratum includes dense coverage of California blackberry and chaparral clematis (*Clematis lasiantha*). Due to the dense upper stratum, the herb stratum is largely confined to the live channel of the creek. The creek channel supports moderate to dense cover of watercress and other wetland species.

Name and distance from blue line creek(s): Project spans Tar Spring Creek

Habitat(s): Arroyo willow (*Salix lasiolepis*) shrubland alliance, coast live oak (*Quercus agrifolia*) woodland, ruderal (disturbed), and agricultural areas.

Site's tree canopy coverage: Approximately 70%.

Based on the California Natural Diversity Database (CNDDB) and an official species list issued by U.S. Fish and Wildlife Service (USFWS), 65 special-status plant species, 46 special-status animal species, and six sensitive habitats were considered for potential to occur within the Project site. Of these species that were considered, six special-status plant species and 16 special-status wildlife species were determined to have potential to occur in the Project site. Several juvenile steelhead (*Oncorhynchus mykiss*), were the only special-status wildlife species observed in the Project site. Based on field surveys conducted during the appropriate blooming period for identified plant species, no special-status plant species occur in the Project site.

With regards to steelhead, Tar Spring Creek (a tributary to Arroyo Grande Creek) is not specifically designated as critical habitat for the south/central California Coast Distinct Population Segment (DPS) of steelhead. However, Tar Spring Creek is a direct tributary to Arroyo Grande Creek which is designated critical habitat for this species. The confluence of Tar Spring Creek and Arroyo Grande Creek does not have any barriers to steelhead passage; therefore, steelhead in Arroyo Grande Creek can easily move into Tar Spring Creek.

Elevated sound levels from pile driving could result in additional temporary impacts to steelhead. Sound generated by pile driving can affect the behavior and physical health of fish that are subjected to the sound waves. The type and magnitude of the effects are dependent on the mass of the fish, the anatomy of the fish, and the location of the fish in the water in relation to the pile driving (Caltrans 2009). Pile driving activities would be conducted during seasonal low flows (June 15 through October 15), at which time surface water in Tar Spring Creek is expected to range from 0.5 to 1.0 feet deep. Flows are expected to be within 0 to 20 cubic feet per second. Pile driving would likely continue for four to six weeks, with one to two piles being installed daily. Work days are anticipated to be 8 to 10 hours during daylight. Although the number of strikes per pile is dependent on the size of hammer used, it estimated that approximately 1,500 strikes per day would be required.

The Project site also supports suitable habitat for California red-legged frog (*Rana draytonii*); however, the Project site is not within a critical habitat unit for this species. Based on the habitat conditions in the Project site and documented occurrences of California red-legged frog in the vicinity, presence of this species is inferred by the County.

Wildlife and floristic surveys were conducted between April of 2011 and August of 2012 by SWCA Environmental Consultants personnel. The Project site supports suitable conditions for 11 additional special-status wildlife species: monarch butterfly (*Danaus plexippus*), arroyo chub (*Gila orcutti*), coast range newt (*Taricha torosa torosa*), southwestern pond turtle (*Emys marmorata*), two-striped garter snake (*Thamnophis hammondii*), western yellow-billed cuckoo (*Coccyzus americanus occidentalis*), pallid bat (*Antrozous pallidus*), Townsend's big-eared bat (*Corynorhinus townsendii*), western mastiff bat (*Eumops perotis californicus*), western red bat (*Lasiurus blossevillii*), and Yuma myotis (*Myotis yumanensis*) (SWCA 2013a).

Impact. The Project site provides suitable habitat for two federally-listed species and 11 special-status wildlife species; therefore, Project activities could impact these species and/or their habitat. Additionally, vegetation removal will occur to facilitate bridge replacement activities.

Steelhead, California red-legged frogs, arroyo chub, southwestern pond turtles, coast range newts, and two-striped garter snakes and their habitats may be impacted by proposed construction activities including implementation of the creek diversion and dewatering plan and removal of the existing concrete fish barrier. During the diversion and dewatering phase of the Project, steelhead and arroyo chub may be stranded within the shrinking pools of the Project site. Removal of riparian vegetation during proposed site preparation activities including channel excavation could potentially result in harm or take of California red-legged frogs, western pond turtles, coast range newts, and two-striped garter snakes. Indirect Project-related impacts to sensitive aquatic resources including discharge of pollutants (i.e. mechanical fuels, oils, sediments, etc.) into their habitat and the waters of Tar Spring Creek may result from grading and construction activities within the proposed Project area.

The proposed Project includes the use of impact hammers to install steel piles for the abutments. Pile driving activities would be conducted during seasonal low flows (June 15 through October 15), at which time, surface water in Tar Spring Creek are expected to range from 0.5 feet to 1.0 feet deep. Flows are expected to be within 0 to 20 cubic feet per second. Pile driving would likely continue for 4 to 6 weeks, with 1 to 2 piles being installed daily. Work days are anticipated to be 8 to 10 hours during daylight. Although the number of strikes per pile is dependent on the size of hammer used, it is

estimated that approximately 1500 strikes per day would be required. If pile driving alone proves to be difficult and requires excessive strikes, the contractors may center relief or pre-drill holes to expedite the pile installation process. The Natural Environment Study prepared for the Project includes an analysis of hydroacoustic effects on steelhead and other fishes. Utilizing the National Oceanic and Atmospheric Administration (NOAA) Fisheries hydroacoustic effects calculator and data from a Washington State Department of Transportation Underwater Sound Levels Associated with "Dry" Pile Driving at the Evans Creek Bridge on State Route 202 (WDOT 2006) monitoring program, the analysis determined that the proposed pile driving is not likely to significantly impact steelhead. Behavior Impacts may occur but the onset of physical injury is not likely to occur (SWCA 2013b).

The Project site is anticipated to permanently impact approximately 0.001 acre (46 square feet) of aquatic habitat for steelhead, California red-legged frogs, arroyo chub, southwestern pond turtles, coast range newts, and two-striped garter snakes. Project activities are anticipated to temporarily impact 0.05 acre (2,318 square feet) of this aquatic habitat.

The Project is anticipated to permanently impact approximately 0.25 acre (10, 724 square feet) of upland habitat for California red-legged frogs, southwestern pond turtles, coast range newts, and two-striped garter snakes. Project activities are anticipated to temporarily impact approximately 0.46 acre (20,077 square feet) of this upland habitat.

Temporary impacts to steelhead, California red-legged frog, arroyo chub, southwestern pond turtle, coast range newt, and two-striped garter snake habitat would be associated with dewatering, heavy equipment operation, bridge construction, bridge demolition, and other Project related disturbances. Permanent impacts would result from installation of the proposed bridge abutments and RSP.

Direct impacts to California red-legged frogs, southwestern pond turtles, coast range newts, and two-striped garter snakes could include injury or mortality in adjacent riparian areas and uplands from construction equipment, construction debris, and worker foot traffic. However, these impacts will be mitigated with the presence of qualified biologists surveying for and moving these species outside of the Project area to suitable habitat. Indirect effects of construction activities, including noise and vibration, may cause California red-legged frogs, southwestern pond turtles, coast range newts, and two-striped garter snakes to abandon habitat adjacent to work areas. This disturbance may increase the potential for predation if California red-legged frogs, southwestern pond turtles, coast range newts, and two-striped garter snakes abandon shelter sites.

There would be a potential for take of California red-legged frogs, southwestern pond turtles, coast range newts, and two-striped garter snakes during construction in upland and riparian dispersal habitats associated with Tar Spring Creek and any necessary capture and relocation of California red-legged frogs, southwestern pond turtles, coast range newts, and two-striped garter snakes. The proposed Project will also create temporary and/or permanent impacts to vegetation along the creek, which may offer shading and microhabitat temperature regulation in the channel; however, the loss of trees will be mitigated with replacement trees.

The Project would result in temporary impacts to steelhead and arroyo chub aquatic habitat. However, the Project is anticipated to result in beneficial long term impacts due to the removal of the passage barrier. Temporary impacts would be associated with dewatering, heavy equipment operation, bridge construction, bridge demolition, and other Project related disturbances. Permanent impacts to steelhead habitat would result from the placement of rock slope protection (RSP) at the proposed bridge abutments. If present in the action area during Project activities, individual steelhead could be stranded in dewatered portions of the creek, caught in dewatering pumps, or made vulnerable to predation from foraging birds and mammals. However, these impacts will be mitigated with the presence of qualified biologists surveying for and moving steelhead outside of the Project area to

suitable habitat. These activities would constitute direct take of the individuals through harassment. Indirect impacts could include sediment deposition downstream of the work area, which could adversely impact downstream water quality. However, this will be mitigated through the use of appropriate silt/erosion controls.

The indirect effects of erosion and sedimentation could impact steelhead, California red-legged frogs, arroyo chub, southwestern pond turtles, coast range newts, and two-striped garter snakes. However, this will be mitigated through the use of appropriate silt/erosion controls. The removal of any encountered exotic wildlife species from Tar Spring Creek may produce a beneficial effect by reducing predation and competition pressures for steelhead, California red-legged frogs, arroyo chub, southwestern pond turtles, coast range newts, and two-striped garter snakes.

Various bat species may be disturbed and/or abandon roosts if present on the existing bridge and/or nearby trees during construction activities. Preconstruction surveys would avoid and minimize impacts to bats.

The Project will temporarily introduce potentially hazardous materials into the area in the form of fuel in construction equipment. A spill and clean-up kit will be stored onsite at all times. All fueling and maintenance of vehicles and other equipment and staging areas will occur at least 20 meters from any riparian habitat or water body. Prior to the onset of work, the County will ensure that the contractor has prepared a plan to allow a prompt and effective response to accidental spills [BR-10 and -11]. All workers will be informed of the importance of preventing spills and of the appropriate measures to take should a spill occur.

Appropriate Project timing and site dewatering would minimize potential adverse effects to these species and would reduce temporary impacts to their habitats. With the implementation of avoidance and minimization measures such as preconstruction surveys and dewatering activities, this Project will have minimal, temporary effect on listed and sensitive species and their habitat. No adverse cumulative effects on biological resources are anticipated to occur as a result of this Project.

A Habitat Mitigation and Monitoring Plan will be prepared and include specific measures for restoration and revegetation of all temporarily disturbed areas. The Plan will include protection measures, standards for revegetation, a monitoring program to ensure proper implementation and maintenance of restored areas, and performance criteria to determine success.

Mitigation/Conclusion. Because two Federally-listed species have been identified in or near the Project site, the proposed Project may impact steelhead & California red-legged frogs, as well as the following special-status species: monarch butterflies, arroyo chub, coast range newt, southwestern pond turtles, two-striped garter snakes, western yellow-billed cuckoos, pallid bats, Townsend's big-eared bats, western mastiff bats, western red bats, and Yuma myotis' if they are present. The below mitigation measures will ensure that impacts to biological resources resulting from the Project are less than significant.

[BR-1]Prior to construction, the County shall obtain all necessary permits, approvals, and authorizations from jurisdictional agencies. These may include, but may not be limited to: (1) ACOE, Section 404 Nationwide Permit 43; (2) RWQCB, Section 401 Water Quality Certification; and (3) CDFG, Section 1602 Streambed Alteration Agreement for activities within the tops of banks or outer edges of riparian canopies (whichever is furthest from the streambed) of Arroyo Grande Creek. The County shall adhere to all conditions included within these permits, approvals, and authorizations.

[BR-2] In-stream work shall take place between June 1 and October 31 in any given year, when the surface water within Tar Spring Creek is likely to be at seasonal minimum.

[BR-3] Prior to construction, exclusionary fencing shall be erected by the contractor at the boundaries of all construction areas to avoid equipment and human intrusion into adjacent creek/wetland habitats. The fencing shall remain in place throughout construction.

[BR-4] During Project activities, all trash that may attract predators shall be properly contained, removed from the work site and disposed of regularly. Following construction, all trash and construction debris shall be removed from work areas.

[BR-5] During construction, no pets will be allowed on the construction site.

[BR-6] If determined to be necessary by Caltrans (lead federal agency), Caltrans will consult with NMFS and USFWS on behalf of the County for impacts to California red-legged frogs and steelhead. The County will adhere to all conditions included within the Biological Opinions issued for the Project.

[BR-7] Before any construction activities begin on the Project, a biologist shall conduct a training session for all construction personnel. The training session shall include a description of species that may be encountered during construction, the importance of these species and their habitat, the general measures that are being implemented to conserve these species as they relate to the Project, and the boundaries within which the Project may be accomplished. Brochures, books, and briefings may be used in the training session, provided that a qualified person is on hand to answer any questions.

[BR-8] Pile driving with impact hammers shall be limited to the low flow period between June 15 and October 15, thus avoiding adult steelhead spawning migration and peak smolt emigration.

[BR-9] When driving piles within 26 horizontal feet of surface water, the contractor will limit the number of daily strikes to 1500.

[BR-10] All fueling and maintenance of vehicles and other equipment and staging areas shall occur at least 20 meters from any riparian habitat or water body. The County shall ensure contamination of habitat does not occur during such operations.

[BR-11] Prior to the onset of work, the County shall ensure that the contractor has prepared a plan to allow a prompt and effective response to accidental spills. All workers shall be informed of the importance of preventing spills and of the appropriate measures to take should a spill occur.

[BR-12] Prior to site disturbance, the County shall print Best Management Practices (BMPs) on all applicable construction plans. BMPs shall be implemented prior to, during, and following construction activities. Measures shall include, but not be limited to the following:

a. Silt fencing shall be placed along the down-slope side of the construction zone.
b. A spill and clean-up kit shall be stored onsite at all times.
c. Temporary and permanent erosion and sedimentation measures shall be implemented (e.g., silt fencing, hay bales, straw wattles, etc.).

[BR-13] If construction activities are conducted during the typical nesting bird season (February 15 – September 15th), preconstruction surveys shall be conducted by the County-approved biologist or County Environmental Resource Specialist prior to any construction activity or vegetation trimming to identify potential bird nesting activity, and:

a. If active nest sites of bird species protected under the Migratory Bird Treaty Act (MBTA) are observed within the vicinity of the Project site, then the Project shall be modified and/or delayed as necessary to avoid direct take of the identified nests, eggs, and/or young;
b. If active nest sites of raptors and/or bird species of special concern are observed within the vicinity of the Project site, then CDFG shall be contacted to establish the appropriate buffer around the nest site. Construction activities in the buffer zone shall be prohibited until the young have fledged the nest and achieved independence; and
c. Active nests shall be documented by a qualified biologist and a letter-report shall be submitted to the County and Caltrans who will submit the information to USFWS and CDFG, documenting Project compliance with the MBTA and applicable Project mitigation measures.

[BR-14] To avoid inadvertent impacts to steelhead, California red-legged frogs, monarch butterflies, arroyo chub, coast range newt, southwestern pond turtles, two-striped garter snakes, western yellow-billed cuckoos, pallid bats, Townsend's big-eared bats, western mastiff bats, western red bats, Yuma myotis', and nesting birds, a biological monitor will conduct preconstruction surveys in Tar Spring Creek and adjacent areas within the Project site, conduct construction employee training prior to site disturbance, and continue monitoring during all initial earth disturbing activities and all diversion and dewatering activities. In the instance a listed or special-status species is discovered, the County shall contact Caltrans, CDFG, NMFS, and USFWS for consultation, unless otherwise authorized under an NMFS- or USFWS-issued *Biological Opinion*. In the instance nesting birds are discovered, work shall cease until the birds have fledged and left the area, or CDFG or USFWS shall be consulted. If any swallow nests are observed, empty nests shall be removed prior to February 15, and shall continue to be removed as they are being built to avoid impacts to active nests prior to construction.

[BR-15] During construction, if the work site is to be temporarily dewatered by pumping, intakes shall be completely screened with wire mesh not larger than five millimeters (5 mm) to prevent California red-legged frogs and steelhead from entering the pump system. Water shall be released or pumped downstream at an appropriate rate to maintain downstream flows during construction. Upon completion of construction activities, any barriers to flow shall be removed in a manner that would allow flow to resume with the least disturbance to the substrate.

[BR-16] Prior to construction, pre-construction surveys (at least two day-time and two at dusk) shall be conducted by qualified biologists no more than 30 days prior to construction to determine if bats are roosting in the Project area. The biologist(s) conducting the preconstruction surveys will also identify the nature of the bat utilization of the area (i.e., no roosting, night roost, day roost, maternity roost).

[BR-17] If bats are found to be roosting in the surveyed areas, the following measures will be implemented during construction:

a. If there is only night roosting by bats and the roost substrate will not be impacted, work may proceed as normal provided that no night-time work is scheduled.
b. If there is day roosting by bats (or night roosting and work during nighttime), qualified biologists shall monitor any construction activities within 100 ft (30 m) for disturbance to bat roosting. If bat roosting behavior is determined to be adversely impacted by construction activities, construction must be avoided in the vicinity of bat roosts until either bats are no longer roosting or they have been excluded from roosting.
c. If maternity roosts are detected, construction activities must be avoided within 100 ft (30 m) of an active maternity roost until the end of the maternity roosting season (end of September). No roost exclusion shall be conducted if maternity roosts are detected.

d. Readily visible exclusion zones shall be established in areas where roosts must be avoided.

5. CULTURAL RESOURCES *Will the project:*	Potentially Significant	Impact can & will be mitigated	Insignificant Impact	Not Applicable
a) Disturb archaeological resources?	☐	☐	☒	☐
b) Disturb historical resources?	☐	☐	☐	☒
c) Disturb paleontological resources?	☐	☐	☐	☒
d) Other: _____	☐	☐	☐	☐

Setting. The Project is located within lands traditionally occupied by the Chumash. The precise location, however, of the boundary between the Chumashan-speaking Obispeño Chumash and their northern neighbors, the Hokan-speaking Playanos Salinan, is currently the subject of debate (Milliken and Johnson 2005). Jones and Waugh (1995:8) state that "those boundaries may well have fluctuated through time in response to possible shifts in economic strategies and population movement." No historic structures are present and no paleontological resources are known to exist in the area.

Impact. The Project's direct Area of Potential Effects (APE) is adjacent to Branch Mill Road in a rural portion near the city of Arroyo Grande (Figure 3). At the time of the field survey, ground surface visibility of the APE was variable due to vegetation, with the proposed staging areas and agricultural fields exhibiting the highest (75-100%) visibility, and the areas along the creek banks the lowest (<5%). In addition, a portion of the APE is completely obscured by existing Branch Mill Road.

An intensive pedestrian survey conducted on July 30, 2012 identified no previously unrecorded historic or prehistoric archaeological resources within the Project direct APE. A very sparse scatter (less than one fragment per 1,000 square meters) of Pismo clam (*Tivela stultorum*) was observed in the northern portion of the APE, within the agricultural fields north of Tar Spring Creek. The shell fragments were observed in a heavily plowed field in context with modern trash including plastic piping, beverage containers, and plastic sheeting. Given the extremely low density of the scatter and the lack of evidence that the shells represent historic or prehistoric activity, the shell scatter does not constitute an archaeological property.

A cultural resources records search for the Project was requested by County Archaeologist Kate Ballantyne, M.A., RPA, at the California Historical Resources Information System (CHRIS) Coastal Information Center (CCIC) on July 29, 2011. A completed records search was returned on August 1, 2011. The CCIC records search identified 22 previously conducted cultural resources studies within a 1-mile radius of the direct APE. None of these studies identified any cultural resources within or adjacent to the APE. The CCIC records search indicates that seven previously recorded cultural resources are located within a 1-mile radius of the direct APE. None of these resources are located within or adjacent to the direct APE. A Phase 1 Survey concluded that no archaeological properties were found with the Project site. SWCA Environmental Consultants personnel conducted the Phase I pedestrian survey on July 25, 2012 (SWCA 2013c).

The Project is receiving funding from Caltrans as a part of their Federal Highway Bridge Program. It is Caltrans's policy to avoid cultural resources whenever possible. If buried cultural materials are encountered during construction, it is Caltrans's policy that work stop in that area until a qualified archaeologist can evaluate the nature and significance of the find. Additional surveys will be required if the Project changes to include areas not previously surveyed.

Mitigation/Conclusion. No significant cultural resource impacts are expected to occur, and no mitigation measures beyond those already built into the Project are necessary.

6. GEOLOGY AND SOILS *Will the project:*	Potentially Significant	Impact can & will be mitigated	Insignificant Impact	Not Applicable
a) ***Result in exposure to or production of unstable earth conditions, such as landslides, earthquakes, liquefaction, ground failure, land subsidence or other similar hazards?***	☐	☐	☐	☒
b) ***Be within a California Geological Survey "Alquist-Priolo" Earthquake Fault Zone", or other known fault zones*?***	☐	☐	☐	☒
c) ***Result in soil erosion, topographic changes, loss of topsoil or unstable soil conditions from project-related improvements, such as vegetation removal, grading, excavation, or fill?***	☐	☐	☒	☐
d) ***Include structures located on expansive soils?***	☐	☐	☐	☒
e) ***Be inconsistent with the goals and policies of the County's Safety Element relating to Geologic and Seismic Hazards?***	☐	☐	☐	☒
f) ***Preclude the future extraction of valuable mineral resources?***	☐	☐	☐	☒
g) ***Other:*** _____	☐	☐	☐	☐

*** Per Division of Mines and Geology Special Publication #42**

Setting. The following relates to the Project's geologic aspects or conditions:

Topography: Gently rolling

Within County's Geologic Study Area?: No

Landslide Risk Potential: Low

Liquefaction Potential: Moderate

Nearby potentially active faults?: No Distance? Not applicable

Area known to contain serpentine or ultramafic rock or soils?: No

Shrink/Swell potential of soil: Low

Other notable geologic features? None

Impact. As proposed, the Project will result in the temporary disturbance of approximately 2.19 acres

(95,803 square feet), and permanent disturbance of 1.4 acres (60,984 square feet). Although the Project area contains moderately liquefiable soils, no new buildings or major underground utilities are proposed as a part of the Project; therefore, mitigation is not warranted above and beyond the mitigation measures under the Biological Resources section relating to erosion control (BR-12, BR-18) (Fugro 2012).

Mitigation/Conclusion. No significant impacts to Geology and Soils were identified; therefore, no mitigation measures are necessary.

7. HAZARDS & HAZARDOUS MATERIALS - ***Will the project:***	**Potentially Significant**	**Impact can & will be mitigated**	**Insignificant Impact**	**Not Applicable**
a) Create a hazard to the public or the environment through the routine transport, use, or disposal of hazardous materials?	☐	☒	☐	☐
b) Create a hazard to the public or the environment through reasonably foreseeable upset and accident conditions involving the release of hazardous materials into the environment?	☐	☐	☒	☐
c) Emit hazardous emissions or handle hazardous or acutely hazardous materials, substances, or waste within ¼-mile of an existing or proposed school?	☐	☐	☐	☒
d) Be located on, or adjacent to, a site which is included on a list of hazardous material/waste sites compiled pursuant to Gov't Code 65962.5 ("Cortese List"), and result in an adverse public health condition?	☐	☐	☐	☒
e) Impair implementation or physically interfere with an adopted emergency response or evacuation plan?	☐	☐	☒	☐
f) If within the Airport Review designation, or near a private airstrip, result in a safety hazard for people residing or working in the project area?	☐	☐	☐	☒
g) Increase fire hazard risk or expose people or structures to high wildland fire hazard conditions?	☐	☐	☒	☐
f) Other: _____	☐	☐	☐	☐

Setting. The Project is not located in an area of known hazardous material contamination. The Project is not within the Airport Review area.

Asbestos

The existing structure is concrete (deck and pilings). West Coast Safety Consultants sampled felt located under the bridge on the concrete deck and no asbestos was detected. Additionally, San Luis Obispo County Department of Planning and Building maps were referenced and it was determined that the site is not located near mapped occurrences of naturally occurring asbestos. The Project site is not located near any mapped occurrences of Naturally Occurring Asbestos (NOA); the closest outcrop of NOA is 5 to 8 miles east of the site (Tim Fuhs, office correspondence, November 20, 2012). All Federal regulations regarding asbestos will be followed. The Air Pollution Control District will be coordinated with prior to any demolition related activities.

Lead

West Coast Safety Consultants conducted an inspection for lead-containing materials. Soil samples were collected from under the bridge and the painted surfaces of the bridge were tested. High levels of lead were detected in the paint. Relatively low levels of lead were detected in the soil beneath the bridge. Prior to demolition of the existing bridge, The County will ensure that the contractor has prepared a Lead Compliance Plan.

Flooding

Portions of the subject Project are within the 100-year Flood Hazard Combining designation (FH).

With regards to potential fire hazards, the subject Project is within the Very High Fire Hazard Severity Zone(s). Based on the County's fire response time map, it will take approximately 6-10 minutes to respond to a call regarding fire or life safety. Branch Mill Road is the secondary route for Five Cities Fire Department. As long as the primary route (Branch Mill Road to Huasna Road) remains open, Five Cities Fire Department has no concerns.

The Project is within the Terminal "dam inundation" area, and is approximately 2.5 miles below the dam. The boundary of the dam inundation area is intended to show the maximum water limit line should there be a catastrophic release/failure of the upstream dam.

Hazardous Materials

The Project will temporarily introduce potentially hazardous materials into the area in the form of fuel in construction equipment. All equipment will be staged on the road. A spill and clean-up kit will be stored onsite at all times. All fueling and maintenance of vehicles and other equipment and staging areas will occur at least 20 meters from any riparian habitat or water body. Prior to the onset of work, the County will ensure that the contractor has prepared a plan to allow a prompt and effective response to accidental spills. All workers will be informed of the importance of preventing spills and of the appropriate measures to take should a spill occur (refer to BR-6).

Impact. The Project will include the use of hazardous materials (fuels and fluids), but will not generate hazardous wastes. The Project does not present a significant fire safety risk. The Project is not expected to conflict with any regional emergency response or evacuation plan. The new bridge has been designed to handle a 100-year storm event and associated flooding. As a part of the Project, the area under and surrounding the bridge will be cleaned up.

Mitigation/Conclusion. The following mitigation measures in addition to those regarding fuel and fluid handling under the Biological Resources Section will bring Project impacts to a less than significant level:

[HM-1] All work will be conducted in accordance to CAL-OSHA and EPA regulations.

[HM-2] Work personnel will be educated on worker safety and appropriate disposal methods prior to handling hazardous materials.

[HM-3] Any staging or equipment/vehicle parking areas shall be free of combustible vegetation and work crews shall have shovels and a fire extinguisher on site during all construction activities.

8. NOISE

Will the project:	**Potentially Significant**	**Impact can & will be mitigated**	**Insignificant Impact**	**Not Applicable**
a) Expose people to noise levels that exceed the County Noise Element thresholds?	☐	☐	☒	☐
b) Generate permanent increases in the ambient noise levels in the project vicinity?	☐	☐	☒	☐
c) Cause a temporary or periodic increase in ambient noise in the project vicinity?	☐	☐	☒	☐
d) Expose people to severe noise or vibration?	☐	☐	☒	☐
e) If located within the Airport Review designation or adjacent to a private airstrip, expose people residing or working in the project area to severe noise levels?	☐	☐	☐	☒
f) Other: _____	☐	☐	☐	☐

Setting. The Project is not within close proximity of loud noise sources, and will not conflict with any sensitive noise receptors (e.g., residences). Based on the Noise Element's projected future noise generation from known stationary and vehicle-generated noise sources, the Project is within an acceptable threshold area.

Noise impacts resulting from construction will be of a short duration, during normal work hours, and temporary in nature. It is not expected that County noise standards will be exceeded as a result of the Project. The following is one of the exceptions to the Noise Standards from the LUO: Noise sources associated with construction provided such activities do not take place before 7 a.m. or after 9 p.m. on any day except Saturday or Sunday, or before 8 a.m. or after 5 p.m. on Saturday or Sunday. The County will abide by this time-frame during all Project activities. The Project is not expected to conflict with the surrounding uses.

Impact. The Project is not expected to conflict with the surrounding uses.

Mitigation/Conclusion. No significant noise impacts are anticipated, and no mitigation measures are necessary beyond limiting construction to the time-frames listed above.

9. POPULATION/HOUSING

Will the project:	Potentially Significant	Impact can & will be mitigated	Insignificant Impact	Not Applicable
a) Induce substantial growth in an area either directly (e.g., construct new homes or businesses) or indirectly (e.g., extension of major infrastructure)?	☐	☐	☐	☒
b) Displace existing housing or people, requiring construction of replacement housing elsewhere?	☐	☐	☐	☒
c) Create the need for substantial new housing in the area?	☐	☐	☐	☒
d) Other: _____	☐	☐	☐	☐

Setting. Bridge replacement activities are not anticipated to result in substantial growth, development, or create a need for substantial housing in the community of Arroyo Grande. The Project is not anticipated to displace existing housing or people or require construction of replacement housing. Additionally, the Project will not result in substantial use of fuel or energy.

Impact. The Project will not result in a need for a significant amount of new housing, and will not displace existing housing.

Mitigation/Conclusion. No significant population and housing impacts are anticipated. No significant impacts are anticipated, and no mitigation measures are necessary.

10. PUBLIC SERVICES/UTILITIES

Will the project have an effect upon, or result in the need for new or altered public services in any of the following areas:	Potentially Significant	Impact can & will be mitigated	Insignificant Impact	Not Applicable
a) Fire protection?	☐	☐	☒	☐
b) Police protection (e.g., Sheriff, CHP)?	☐	☐	☒	☐
c) Schools?	☐	☐	☒	☐
d) Roads?	☐	☐	☒	☐
e) Solid Wastes?	☐	☐	☐	☒
f) Other public facilities?	☐	☐	☐	☒
g) Other: _____	☐	☐	☐	☐

Setting. The Project area is served by the following public services/facilities:

Police: County Sheriff Location: Oceano (Approximately 2.4 miles to the west)

Fire: Cal Fire (formerly CDF) Hazard Severity: Very High Response Time: 6-10 minutes

Location: Approximately 5.0 miles to the northwest

School District: Lucia Mar Unified School District.

Impact. Branch Mill Road between Huasna Road and Newsom Springs Road will be closed to through traffic during the Project (approximately 5 months). Traffic will be re-routed through Arroyo Grande Village via Huasna Road, to Branch Street, to Traffic Way, to Cherry Avenue, and back on to Branch Mill Road. A temporary crossing will remain in place at the Project site for the local farm operations and contractor access.

The primary drivers of the roadway include agricultural traffic, traffic accessing Branch Elementary School, and residents from the Huasna Valley. Branch Mill Road offers access to the southerly end of Arroyo Grande Village and several residential developments.

Branch Mill Road is the secondary route for Five Cities Fire Department. As long as the primary route (Branch Mill Road to Huasna Road) remains open, Five Cities Fire Department has no concerns. One Branch Elementary School bus will need to use the detour. Closing the road toward the end of the school year and working during summer months will minimize impacts to school traffic.

The girders for the bridge will be pre-cast off-site and trucked to the site. It is not anticipated that trees will need to be cut down and/or roads widened to accommodate the transport of oversize loads. The most probable route will be Grand Avenue, to East Branch Street, to Huasna Road, to Branch Mill Road. The Contractor will finalize the route and may try to route via Grand Avenue, to Traffic Way, to Cherry Avenue, to Branch Mill Road. Traffic will be coordinated with local agencies (City of Arroyo Grande) to make sure the transport doesn't interfere with any City plans or events.

Mitigation/Conclusion. No significant public services/utilities impacts are anticipated and no mitigation measures are necessary.

11. RECREATION

Will the project:	**Potentially Significant**	**Impact can & will be mitigated**	**Insignificant Impact**	**Not Applicable**
a) Increase the use or demand for parks or other recreation opportunities?	☐	☐	☐	☒
b) Affect the access to trails, parks or other recreation opportunities?	☐	☐	☐	☒
c) Other _____	☐	☐	☐	☐

Setting. Based on the County Trails Map, the Project is within reasonably close proximity to the Arroyo Grande Creek Trail.

Impact. Project activities associated with bridge replacement will not interfere with the proposed location of the trail. The bridge will be replaced along its current alignment.

Mitigation/Conclusion. No significant recreation impacts are anticipated, and no mitigation measures are necessary.

12. TRANSPORTATION/CIRCULATION *Will the project:*	Potentially Significant	Impact can & will be mitigated	Insignificant Impact	Not Applicable
a) *Increase vehicle trips to local or areawide circulation system?*	☐	☐	☒	☐
b) *Reduce existing "Level of Service" on public roadway(s)?*	☐	☐	☒	☐
c) *Create unsafe conditions on public roadways (e.g., limited access, design features, sight distance, slow vehicles)?*	☐	☐	☒	☐
d) *Provide for adequate emergency access?*	☐	☐	☒	☐
e) *Conflict with an established measure of effectiveness for the performance of the circulation system considering all modes of transportation (e.g. LOS, mass transit, etc.)?*	☐	☐	☐	☒
f) *Conflict with an applicable congestion management program?*	☐	☐	☒	☐
g) *Conflict with adopted policies, plans, or programs regarding public transit, bicycle, or pedestrian facilities, or otherwise decrease the performance or safety of such facilities?*	☐	☐	☒	☐
h) *Result in a change in air traffic patterns that may result in substantial safety risks?*	☐	☐	☐	☒
i) *Other:* _____	☐	☐	☐	☐

Setting/Impact. The Project is located in a rural area. Branch Mill Road accommodates moderate traffic volumes, averaging approximately 1240 vehicles/day (2010 data).

Branch Mill Road between Huasna Road and Newsom Springs Road will be closed to through traffic during the Project (approximately 5 months). Traffic will be re-routed through Arroyo Grande Village via Huasna Road, to Branch Street, to Traffic Way, to Cherry Avenue, and back on to Branch Mill Road. A temporary crossing will remain in place at the Project site for the local farm operations and contractor access.

The primary drivers of the roadway include agricultural traffic, traffic accessing Branch Elementary School, and residents from the Huasna Valley. Branch Mill Road offers access to the southerly end of Arroyo Grande Village and several residential developments.

Branch Mill Road is the secondary route for Five Cities Fire Department. As long as the primary route (Branch Mill Road to Huasna Road) remains open, Five Cities Fire Department has no concerns. One Branch Elementary School bus will need to use the detour. Closing the road toward the end of the school year and working during summer months will minimize impacts to school traffic.

Traffic times will be increased for traffic heading south on Highway 101 and for traffic accessing Branch Elementary School. This small amount of additional traffic will not result in a significant change to the existing road service or traffic safety levels. The Project does not conflict with adopted policies,

plans and programs on transportation.

Mitigation/Conclusion. No significant transportation/circulation impacts were identified, and no mitigation measures above what are already required by ordinance are necessary.

13. WASTEWATER *Will the project:*	Potentially Significant	Impact can & will be mitigated	Insignificant Impact	Not Applicable
a) Violate waste discharge requirements or Central Coast Basin Plan criteria for wastewater systems?	☐	☐	☐	☒
b) Change the quality of surface or ground water (e.g., nitrogen-loading, day-lighting)?	☐	☐	☒	☐
c) Adversely affect community wastewater service provider?	☐	☐	☐	☒
d) Other: _____	☐	☐	☐	☐

Setting/Impact. The proposed Project involves replacing a bridge which is not anticipated to generate waste or wastewater or adversely affect wastewater facilities and solid waste capacity. A portable chemical toilet will be available for use by construction crews. No impacts resulting from wastewater would occur as a result of the proposed Project.

Mitigation/Conclusion. No significant impacts are anticipated, and no mitigation measures are necessary.

14. WATER & HYDROLOGY *Will the project:*	Potentially Significant	Impact can & will be mitigated	Insignificant Impact	Not Applicable
QUALITY				
a) Violate any water quality standards?	☐	☒	☐	☐
b) Discharge into surface waters or otherwise alter surface water quality (e.g., turbidity, sediment, temperature, dissolved oxygen, etc.)?	☐	☒	☐	☐
c) Change the quality of groundwater (e.g., saltwater intrusion, nitrogen-loading, etc.)?	☐	☐	☐	☒
d) Create or contribute runoff water which would exceed the capacity of existing or planned stormwater drainage systems or provide additional sources of polluted runoff?	☐	☐	☒	☐

14. WATER & HYDROLOGY

Will the project:	Potentially Significant	Impact can & will be mitigated	Insignificant Impact	Not Applicable
e) Change rates of soil absorption, or amount or direction of surface runoff?	☐	☐	☐	☒
f) Change the drainage patterns where substantial on- or off-site sedimentation/ erosion or flooding may occur?	☐	☐	☒	☐
g) Involve activities within the 100-year flood zone?	☐	☐	☒	☐
QUANTITY				
h) Change the quantity or movement of available surface or ground water?	☐	☐	☐	☒
i) Adversely affect community water service provider?	☐	☐	☐	☒
j) Expose people to a risk of loss, injury or death involving flooding (e.g., dam failure,etc.), or inundation by seiche, tsunami or mudflow?	☐	☐	☐	☒
k) Other: _____	☐	☐	☐	☐

Setting. Water quality within Tar Spring Creek may be impacted by proposed construction activities including implementation of the creek diversion and dewatering plan and removal of the existing concrete check dam (aka, fish passage barrier). As discussed above under Hazards and Hazardous Materials, the Project will temporarily introduce potentially hazardous materials into the area in the form of fuel in construction equipment. However, a spill and clean-up kit will be stored onsite at all times and all fueling and maintenance of vehicles and other equipment and staging areas will occur at least 20 meters from any riparian habitat or water body.

The topography of the Project is gently rolling. The closest creek from the proposed development is on site. As described in the NRCS Soil Survey, the soil surface is considered to have low to moderateerodibility.

The Project involves more than one acre of disturbance and is subject to preparing a Storm Water Pollution Prevention Plan (SWPPP) to minimize on-site sedimentation and erosion. Temporary and permanent erosion control measures will be implemented during and after construction activities are complete (BR-7 & BR-13).

DRAINAGE – The following relates to the Project's drainage aspects:

Within the 100-year Flood Hazard designation? Yes; The Project will construct a bridge with sufficient height above the 100-year flood line)

Closest creek? Tar Spring Creek Distance? on-site

Soil drainage characteristics: Well drained (Psamments and Fluvents) to moderately drained (Mocho loam) to poorly drained (Riverwash)

SEDIMENTATION AND EROSION –The Project's soil types and descriptions are listed in the

previous Agriculture section under "Setting". As described in the NRCS Soil Survey, the Project's soil erodibility is as follows:

Soil erodibility: Low to moderate

Impact – Water Quality/Hydrology

With regards to Project impacts on water quality the following conditions apply: ***(choose applicable items)***

- ✓ Approximately 2.19 acres of temporary site disturbance is proposed;
- ✓ The Project will be subject to standard County requirements for drainage, sedimentation and erosion control for construction and permanent use;
- ✓ The Project will be disturbing over an acre and will be required to prepare a SWPPP, which will be implemented during construction;
- ✓ Stockpiles will be properly managed during construction to avoid material loss due to erosion;
- ✓ All hazardous materials and/or wastes will be properly stored on-site, which include secondary containment should spills or leaks occur;

The Project could result in water quality impacts through dewatering activities, the discharge of sediments during construction, or the accidental spill of petroleum based fuels or lubricants. The Project will not affect groundwater levels. Dewatering at the site would be localized and return of pumped water to the stream would prevent any decrease in groundwater in Arroyo Grande Valley.

Mitigation/Conclusion. Degradation to water quality within Tar Spring Creek before and during construction activities would be mitigated by the implementation of a dewatering and diversion plan, mitigation and monitoring plan, and best management practices to prevent erosion/sedimentation. The County is also required to obtain a permit from the Regional Water Quality Control Board prior to commencement of site disturbance (Mitigation Measures BR-1, BR-10, BR-11, BR-12, and BR-18).

Based on the discussion above and implementation of all recommended mitigation measures, all on-site, off-site, direct, in-direct, and cumulative hydrology and water quality impacts associated with the proposed Project are less than significant.

15. LAND USE *Will the project:*	**Inconsistent**	**Potentially Inconsistent**	**Consistent**	**Not Applicable**
a) Be potentially inconsistent with land use, policy/regulation (e.g., general plan [County Land Use Element and Ordinance], local coastal plan, specific plan, Clean Air Plan, etc.) adopted to avoid or mitigate for environmental effects?	☐	☐	☒	☐
b) Be potentially inconsistent with any habitat or community conservation plan?	☐	☐	☒	☐
c) Be potentially inconsistent with adopted agency environmental plans or policies with jurisdiction over the project?	☐	☐	☒	☐

15. LAND USE

Will the project:

	Inconsistent	Potentially Inconsistent	Consistent	Not Applicable
d) Be potentially incompatible with surrounding land uses?	☐	☐	☒	☐
e) Other: _____	☐	☐	☐	☐

Setting/Impact. Surrounding uses are identified on Page 3 of the Initial Study. The proposed Project was reviewed for consistency with policy and/or regulatory documents relating to the environment and appropriate land use (e.g., County Land Use Ordinance, etc.). Referrals were sent to outside agencies to review for policy consistencies (e.g., CAL FIRE for Fire Code, APCD for Clean Air Plan, etc.). The Project was found to be consistent with these documents (refer also to Exhibit A on reference documents used).

The Project is within a proposed Habitat Conservation Plan (HCP) area. The proposed HCP will address water releases from Lopez Dam and the effect of those releases on federally listed species within Arroyo Grande Creek. The Project will not affect the Habitat Conservation Planning effort. Federally listed species habitat improvements associated with this Project will occur independently of and not impair the on-going HCP process. The Project is consistent or compatible with the surrounding uses as summarized on page 2 of this Initial Study.

Mitigation/Conclusion. No inconsistencies were identified and therefore no additional measures above what will already be required were determined necessary.

16. MANDATORY FINDINGS OF SIGNIFICANCE

Will the project:

	Potentially Significant	Impact can & will be mitigated	Insignificant Impact	Not Applicable
a) Have the potential to degrade the quality of the environment, substantially reduce the habitat of a fish or wildlife species, cause a fish or wildlife population to drop below self-sustaining levels, threaten to eliminate a plant or animal community, reduce the number or restrict the range of a rare or endangered plant or animal or eliminate important examples of the major periods of California history or prehistory?	☐	☐	☒	☐
b) Have impacts that are individually limited, but cumulatively considerable? ("Cumulatively considerable" means that the incremental effects of a project are considerable when viewed in connection with the effects of past projects, the effects of other current projects, and the effects of probable future projects)	☐	☐	☒	☐
c) Have environmental effects which will cause substantial adverse effects on human beings, either directly or indirectly?	☐	☐	☒	☐

For further information on CEQA or the county's environmental review process, please visit the County's web site at "www.sloplanning.org" under "Environmental Information", or the California Environmental Resources Evaluation System at: http://www.ceres.ca.gov/topic/env_law/ceqa/guidelines for information about the California Environmental Quality Act.

Exhibit A - Initial Study References and Agency Contacts

The County Planning Department has contacted various agencies for their comments on the proposed project. With respect to the subject application, the following have been contacted (marked with an ☒) and when a response was made, it is either attached or in the application file:

Contacted	Agency	Response
☒	County Public Works Department	**Project Proponent**
☐	County Environmental Health Division	**Not Applicable**
☒	County Agricultural Commissioner's Office	**In File****
☐	County Airport Manager	**Not Applicable**
☐	Airport Land Use Commission	**Not Applicable**
☒	Air Pollution Control District	**In File****
☐	County Sheriff's Department	**Not Applicable**
☒	Regional Water Quality Control Board	**None**
☐	CA Coastal Commission	**Not Applicable**
☒	CA Department of Fish and Wildlife	**None**
☐	CA Department of Forestry (Cal Fire)	**Not Applicable**
☐	CA Department of Transportation	**Not Applicable**
☐	Community Service District	**Not Applicable**
☒	Other _____	U.S. Army Corps of Engineers
☒	Other _____	Oceano CSD

** *"No comment" or "No concerns"-type responses are usually not attached*

The following checked ("☒") reference materials have been used in the environmental review for the proposed project and are hereby incorporated by reference into the Initial Study. The following information is available at the County Planning and Building Department.

☒ Project File for the Subject Application

☐ Solid Waste Management Plan

County documents

☐ Airport Land Use Plans
☒ Annual Resource Summary Report
☐ Building and Construction Ordinance
☐ Coastal Policies
☒ Framework for Planning (Coastal & Inland)
☒ General Plan (Inland & Coastal), including all maps & elements; more pertinent elements considered include:
  ☒ Agriculture & Open Space Element
  ☒ Energy Element
  ☒ Environment Plan (Conservation, Historic and Esthetic Elements)
  ☒ Housing Element
  ☒ Noise Element
  ☒ Parks & Recreation Element
  ☒ Safety Element
☒ Land Use Ordinance
☐ Real Property Division Ordinance
☒ Trails Plan

☐ Area Plan
and Update EIR
☐ Circulation Study

Other documents

☒ Archaeological Resources Map
☒ Area of Critical Concerns Map
☒ Areas of Special Biological Importance Map
☒ California Natural Species Diversity Database
☒ Clean Air Plan
☒ Fire Hazard Severity Map
☒ Flood Hazard Maps
☒ Natural Resources Conservation Service Soil Survey for SLO County
☒ Regional Transportation Plan
☒ Uniform Fire Code
☒ Water Quality Control Plan (Central Coast Basin – Region 3)
☒ GIS mapping layers (e.g., habitat, streams, contours, etc.)
☐ Other

In addition, the following Project specific information and/or reference materials have been considered as a part of the Initial Study:

County References

California Department of Transportation (Caltrans). 2009. Technical Guidance for Assessment and Mitigation of the Hydroacoustic Effects of Pile Driving on Fish. Prepared by ICF Jones & Stokes, Illingworth and Rodkin, Inc. February 2009.

Fugro Consultants, Inc. 2012. Foundation Report Branch Mill Road Bridge Replacement Over Tar Spring Creek BRLO-5949(116), Bridge No. 49C-0143 San Luis Obispo County, California (Draft). Prepared for Quincy Engineering, Inc.

Jones, Terry L. and Georgie Waugh. 1995. *Central California Prehistory: A View from Little Pico Creek.* Perspectives in California Archaeology 3. Institute of Archaeology, University of California, Los Angeles.

Milliken, Randall and John R. Johnson. 2005. An Ethnogeography of the Salinan and Northern Chumash Communities – 1769 to 1810. Far Western Anthropological Research Group, Inc. Submitted to California Department of Transportation, District 5. On file at SWCA Environmental Consultants, South Pasadena, California.

SWCA Environmental Consultants. 2013a. Branch Mill Road at Tar spring Creek Highway Bridge Replacement Project, Biological Assessment. Prepared for Caltrans, District 5.

SWCA Environmental Consultants. 2013b. Branch Mill Road at Tar spring Creek Highway Bridge Replacement Project, Natural Environment Study. Prepared for Caltrans, District 5.

SWCA Environmental Consultants. 2013c. Archaeological Survey Report for the Branch Mill Road at Tar Spring Creek Bridge Replacement Project, Arroyo Grande, San Luis Obispo, California. Prepared for Caltrans, District 5.

Washington State Department of Transportation (WDOT) Office of Air Quality and Noise. 2006. Underwater Sound Levels Associated with "Dry" Pile Driving at the Evans Creek Bridge on SR 202. September 2006.

West Coast Safety Consultants. 2012a. Lead Inspection – Branch Mill Road Bridge, Arroyo Grande, California. Prepared for Rosalyn Piza, County of San Luis Obispo, Department of Public Works. 2 pg + appendices.

West Coast Safety Consultants. 2012b. Asbestos Inspection – Branch Mill Road Bridge, Arroyo Grande, California. Prepared for Rosalyn Piza, County of San Luis Obispo, Department of Public Works. 2 pg + appendices.
C:\Environmental\InitialStudy\Checklist\Possible References.doc

Exhibit B - Mitigation Summary Table

AGRICULTURAL RESOURCES

[AG-1] Ensure Contractor obtains all necessary grading permits for disposal of excavated materials outside of the County ROW.

AIR QUALITY

[AQ-1] Reduce the amount of the disturbed area where possible.

[AQ-2] Use water trucks or sprinkler systems in sufficient quantities to prevent airborne dust from leaving the site. An adequate water supply source must be identified. Increased watering frequency would be required whenever wind speeds exceed 15 mph. Reclaimed (non-potable) water should be used whenever possible.

[AQ-3] All dirt stockpile areas should be sprayed daily as needed, covered, or an APCD approved alternative method will be used.

[AQ-4] Permanent dust control measures identified in the approved project revegetation plans should be implemented as soon as possible following completion of any soil disturbing activities.

[AQ-5] Exposed ground areas that will be reworked at dates greater than one month after initial grading should be sown with a fast-germinating non-invasive grass seed and watered until vegetation is established.

[AQ-6] All disturbed soil areas not subject to revegetation should be stabilized using approved chemical soil binders, jute netting, or other methods approved in advance by the APCD.

[AQ-7] All roadways, driveways, sidewalks, etc. to be paved should be completed as soon as possible. In addition, building pads should be laid as soon as possible after grading unless seeding or soil binders are used.

[AQ-8] Vehicle speed for all construction vehicles shall not exceed 15 mph on any unpaved surface at the construction site.

[AQ-9] All trucks hauling dirt, sand, soil, or other loose materials are to be covered or should maintain at least two feet of freeboard (minimum vertical distance between top of load and top of trailer) in accordance with CVC Section 23114.

[AQ-10] The County will submit a Notification of Demolition to the APCD 10 days prior to bridge demolition activities.

BIOLOGICAL RESOURCES

[BR-1]Prior to construction, the County shall obtain all necessary permits, approvals, and authorizations from jurisdictional agencies. These may include, but may not be limited to: (1) ACOE, Section 404 Nationwide Permit 43; (2) RWQCB, Section 401 Water Quality Certification; and (3) CDFG, Section 1602 Streambed Alteration Agreement for activities within the tops of banks or outer edges of riparian canopies (whichever is furthest from the

streambed) of Arroyo Grande Creek. The County shall adhere to all conditions included within these permits, approvals, and authorizations.

[BR-2] In-stream work shall take place between June 1 and October 31 in any given year, when the surface water within Tar Spring Creek is likely to be at seasonal minimum.

[BR-3] Prior to construction, exclusionary fencing shall be erected by the contractor at the boundaries of all construction areas to avoid equipment and human intrusion into adjacent creek/wetland habitats. The fencing shall remain in place throughout construction.

[BR-4] During Project activities, all trash that may attract predators shall be properly contained, removed from the work site and disposed of regularly. Following construction, all trash and construction debris shall be removed from work areas.

[BR-5] During construction, no pets will be allowed on the construction site.

[BR-6] If determined to be necessary by Caltrans (lead federal agency), Caltrans will consult with NMFS and USFWS on behalf of the County for impacts to California red-legged frogs and steelhead. The County will adhere to all conditions included within the Biological Opinions issued for the Project.

[BR-7] Before any construction activities begin on the Project, a biologist shall conduct a training session for all construction personnel. The training session shall include a description of species that may be encountered during construction, the importance of these species and their habitat, the general measures that are being implemented to conserve these species as they relate to the Project, and the boundaries within which the Project may be accomplished. Brochures, books, and briefings may be used in the training session, provided that a qualified person is on hand to answer any questions.

[BR-8] Pile driving with impact hammers shall be limited to the low flow period between June 15 and October 15, thus avoiding adult steelhead spawning migration and peak smolt emigration.

[BR-9] When driving piles within 26 horizontal feet of surface water, the contractor will limit the number of daily strikes to 1500.

[BR-10] All fueling and maintenance of vehicles and other equipment and staging areas shall occur at least 20 meters from any riparian habitat or water body. The County shall ensure contamination of habitat does not occur during such operations.

[BR-11] Prior to the onset of work, the County shall ensure that the contractor has prepared a plan to allow a prompt and effective response to accidental spills. All workers shall be informed of the importance of preventing spills and of the appropriate measures to take should a spill occur.

[BR-12] Prior to site disturbance, the County shall print Best Management Practices (BMPs) on all applicable construction plans. BMPs shall be implemented prior to, during, and following construction activities. Measures shall include, but not be limited to the following:

a. Silt fencing shall be placed along the down-slope side of the construction zone.
b. A spill and clean-up kit shall be stored onsite at all times.
c. Temporary and permanent erosion and sedimentation measures shall be implemented (e.g., silt fencing, hay bales, straw wattles, etc.).

[BR-13] If construction activities are conducted during the typical nesting bird season (February 15 –

September 15th), preconstruction surveys shall be conducted by the County-approved biologist or County Environmental Resource Specialist prior to any construction activity or vegetation trimming to identify potential bird nesting activity, and:

a. If active nest sites of bird species protected under the Migratory Bird Treaty Act (MBTA) are observed within the vicinity of the Project site, then the Project shall be modified and/or delayed as necessary to avoid direct take of the identified nests, eggs, and/or young;
b. If active nest sites of raptors and/or bird species of special concern are observed within the vicinity of the Project site, then CDFG shall be contacted to establish the appropriate buffer around the nest site. Construction activities in the buffer zone shall be prohibited until the young have fledged the nest and achieved independence; and
c. Active nests shall be documented by a qualified biologist and a letter-report shall be submitted to the County and Caltrans who will submit the information to USFWS and CDFG, documenting Project compliance with the MBTA and applicable Project mitigation measures.

[BR-14] To avoid inadvertent impacts to steelhead, California red-legged frogs, monarch butterflies, arroyo chub, coast range newt, southwestern pond turtles, two-striped garter snakes, western yellow-billed cuckoos, pallid bats, Townsend's big-eared bats, western mastiff bats, western red bats, Yuma myotis', and nesting birds, a biological monitor will conduct preconstruction surveys in Tar Spring Creek and adjacent areas within the Project site, conduct construction employee training prior to site disturbance, and continue monitoring during all initial earth disturbing activities and all diversion and dewatering activities. In the instance a listed or special-status species is discovered, the County shall contact Caltrans, CDFG, NMFS, and USFWS for consultation, unless otherwise authorized under an NMFS- or USFWS-issued *Biological Opinion*. In the instance nesting birds are discovered, work shall cease until the birds have fledged and left the area, or CDFG or USFWS shall be consulted. If any swallow nests are observed, empty nests shall be removed prior to February 15, and shall continue to be removed as they are being built to avoid impacts to active nests prior to construction.

[BR-15] During construction, if the work site is to be temporarily dewatered by pumping, intakes shall be completely screened with wire mesh not larger than five millimeters (5 mm) to prevent California red-legged frogs and steelhead from entering the pump system. Water shall be released or pumped downstream at an appropriate rate to maintain downstream flows during construction. Upon completion of construction activities, any barriers to flow shall be removed in a manner that would allow flow to resume with the least disturbance to the substrate.

[BR-16] Prior to construction, pre-construction surveys (at least two day-time and two at dusk) shall be conducted by qualified biologists no more than 30 days prior to construction to determine if bats are roosting in the Project area. The biologist(s) conducting the preconstruction surveys will also identify the nature of the bat utilization of the area (i.e., no roosting, night roost, day roost, maternity roost).

[BR-17] If bats are found to be roosting in the surveyed areas, the following measures will be implemented during construction:

a. If there is only night roosting by bats and the roost substrate will not be impacted, work may proceed as normal provided that no night-time work is scheduled.
b. If there is day roosting by bats (or night roosting and work during nighttime), qualified biologists shall monitor any construction activities within 100 ft (30 m) for disturbance to bat roosting. If bat roosting behavior is determined to be adversely impacted by construction

activities, construction must be avoided in the vicinity of bat roosts until either bats are no longer roosting or they have been excluded from roosting.

c. If maternity roosts are detected, construction activities must be avoided within 100 ft (30 m) of an active maternity roost until the end of the maternity roosting season (end of September). No roost exclusion shall be conducted if maternity roosts are detected.
d. Readily visible exclusion zones shall be established in areas where roosts must be avoided.

[BR-18] A Habitat Mitigation and Monitoring Plan will be prepared and will include specific measures for restoration and revegetation of all temporarily disturbed areas. The Plan will include protection measures, standards for revegetation, a monitoring program to ensure proper implementation and maintenance of restored areas, and performance criteria to determine success.

HAZARDOUS MATERIALS

[HM-1] All work will be conducted in accordance to CAL-OSHA and EPA regulations.

[HM-2] Work personnel will be educated on worker safety and appropriate disposal methods prior to handling hazardous materials.

[HM-3] Any staging or equipment/vehicle parking areas shall be free of combustible vegetation and work crews shall have shovels and a fire extinguisher on site during all construction activities.

Mitigation Monitoring Plan

The purpose of a Mitigation Monitoring Plan is to provide a program to examine, document and record compliance with the environmental plans and specifications pertinent to the proposed project, in order to comply with Section 21081.6 of the California Environmental Quality Act (CEQA). This plan provides the standards and methods necessary to ensure and document the implementation of the environmental mitigation measures which have been included in the project description as well as with the conditions of approval placed on project permits. Responsibility for ensuring successful implementation of the Mitigation Monitoring Plan lies with the County of San Luis Obispo, as the project proponent and Lead Agency for the project under CEQA.

If the recommended mitigation measures and monitoring plan are implemented successfully, the potential significant adverse effects stemming from project construction will be reduced to a level of insignificance.

Mitigation monitoring will be carried out by the Environmental Programs Division of the County's Department of Public Works. The Environmental Programs Division provides environmental services to the Department of Public Works, including mitigation compliance and monitoring, with CEQA oversight by the County's Environmental Coordinator.

Upon approval of the CEQA document, and issuance of all required permits, the Environmental Programs Division will assign internal responsibility for compliance with each mitigation measure to one or more members of the project team. Responsible parties include the Environmental Programs Division, the Project Manager (PM), the Resident Engineer (RE), and/or on-site monitors.

Mitigation measures are organized into project design, pre-construction, construction, and post construction tasks. Compliance with mitigation measures is documented in the project file through written reports, accompanied by project photos where necessary. Post construction monitoring of revegetation and other project components is documented by yearly reports, on a schedule typically determined by one or more of the project permits. Depending on the complexity of the post construction mitigation effort, tasks will be carried out by county staff or technical experts under contract to the County. Post construction monitoring is typically conducted for three to five years, depending on permit requirements and success criteria.

Where necessary, construction personnel will be required to attend a crew orientation meeting. The meeting will be conducted by the RE and will be used to acquaint the construction crews with the environmental sensitivities of the project site. The orientation meeting shall place an emphasis on the need for adherence to the mitigation measures and permit conditions as well as the need for cooperation and communication among all parties concerned (i.e., RE, Environmental Programs Division, Environmental Coordinator, construction personnel) in working together to solve problems and arrive at solutions in the field.

Figure 1. Project Vicinity Map

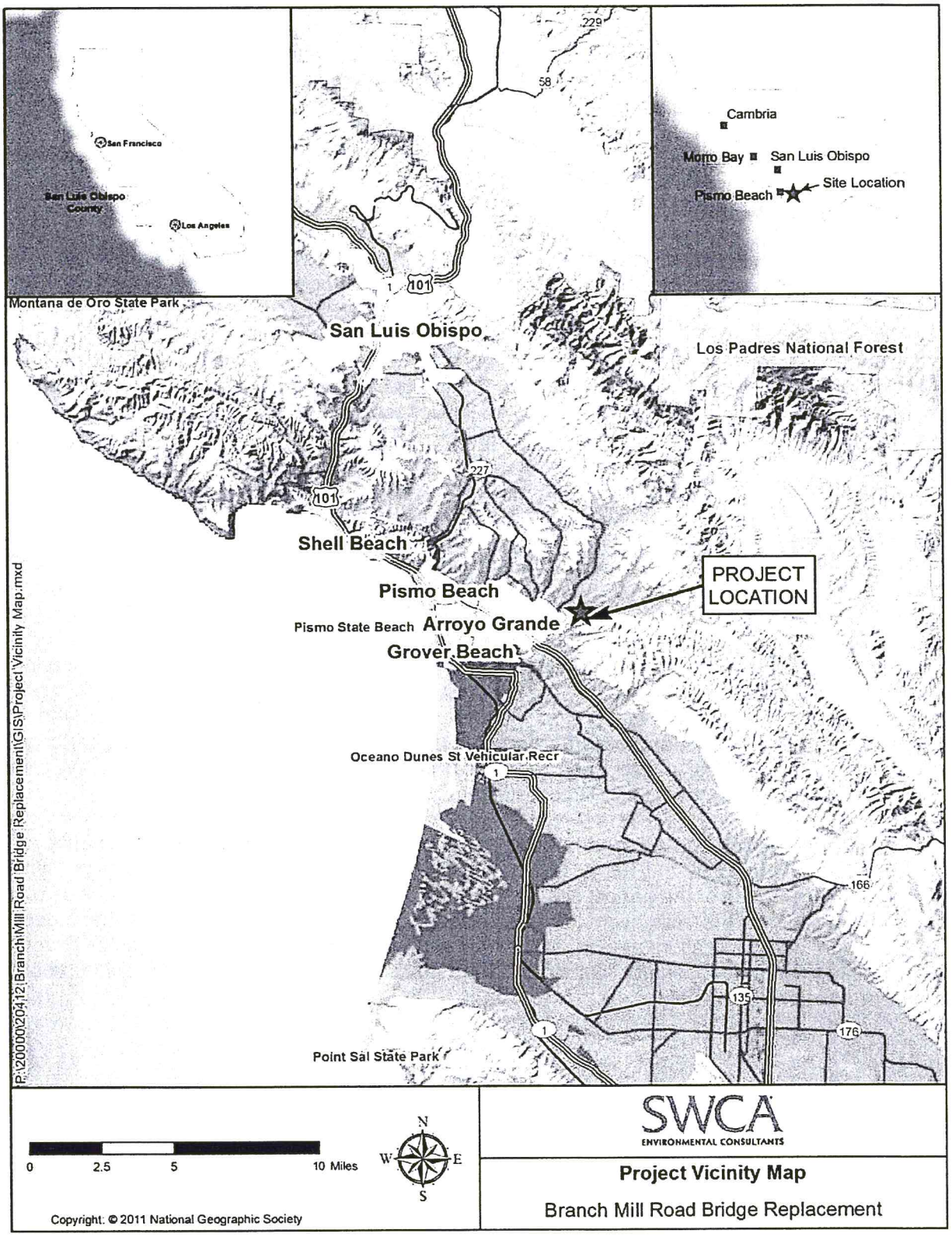

Figure 2. Project Location Map

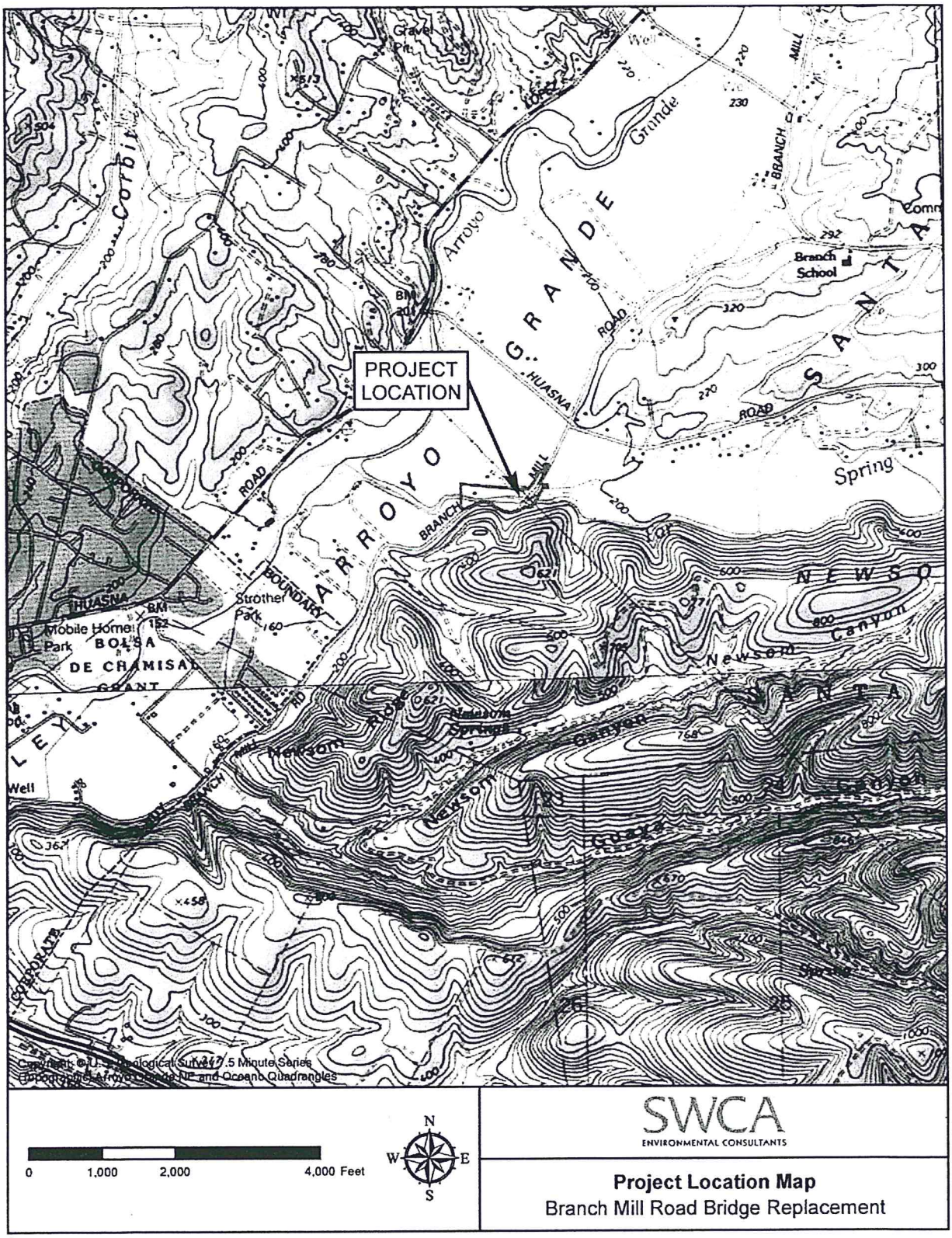

APPENDIX B

NOTES:

1. PG&E OVERHEAD LINES APPROXIMATELY 250' ABOVE BRANCH MILL ROAD. CONTRACTOR TO VERIFY WIRE HEIGHTS PRIOR TO BEGINNING CONSTRUCTION.

LEGEND:

- ROCK SLOPE PROTECTION
- CURVE NUMBER
- HORIZONTAL AND VERTICAL CONTROL
- FENCE (TYPE BW)
- EXISTING OVERHEAD ELECTRIC
- CCWA CENTRAL COAST WATER AUTHORITY

CURVE DATA

No.	R	Δ	T	L
1	200.00'	53°26'16"	100.68'	186.53'
2	230.00'	74°25'58"	174.68'	298.79'
3	600.00'	16°33'45"	87.33'	173.44'

UTILITY	REPRESENTATIVE	PHONE NUMBER
230 kV OH ELECTRIC	PG&E	(805) 546-3888
42" 300 psi, WATER LINE	CENTRAL COAST WATER AUTHORITY	(805) 688-2292

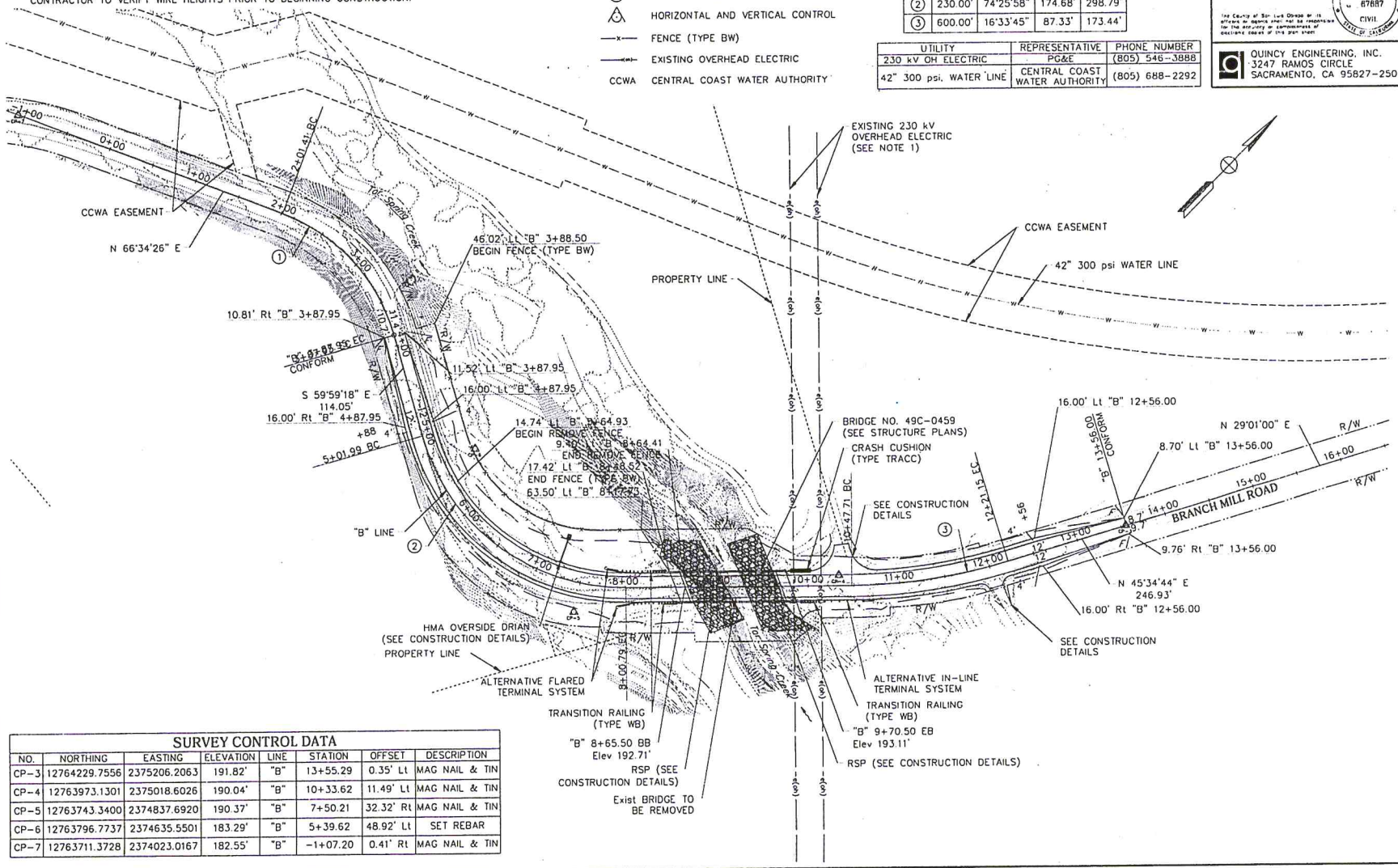

SURVEY CONTROL DATA

NO.	NORTHING	EASTING	ELEVATION	LINE	STATION	OFFSET	DESCRIPTION
CP-3	12764229.7556	2375206.2063	191.82'	"B"	13+55.29	0.35' Lt	MAG NAIL & TIN
CP-4	12763973.1301	2375018.6026	190.04'	"B"	10+33.62	11.49' Lt	MAG NAIL & TIN
CP-5	12763743.3400	2374837.6920	190.37'	"B"	7+50.21	32.32' Rt	MAG NAIL & TIN
CP-6	12763796.7737	2374635.5501	183.29'	"B"	5+39.62	48.92' Lt	SET REBAR
CP-7	12763711.3728	2374023.0167	182.55'	"B"	-1+07.20	0.41' Rt	MAG NAIL & TIN

FOR REDUCED PLANS ORIGINAL SCALE IS IN INCHES 0 1 2 3

DIST 5 | COUNTY SLO | PROJECT TAR SPRING CREEK BRIDGE ON BRANCH MILL ROAD | SHEET NO. XX | TOTAL SHEETS XX

65% SUBMITTAL

REGISTERED CIVIL ENGINEER DATE

REGISTERED PROFESSIONAL ENGINEER Garrett Weaver No. 87687 CIVIL STATE OF CALIFORNIA

The County of San Luis Obispo is not responsible for the accuracy or completeness of electronic copies of this plan sheet.

QUINCY ENGINEERING, INC.
3247 RAMOS CIRCLE
SACRAMENTO, CA 95827-2501

DESIGN R. GARCIA
DRAWN R. GARCIA
SCALE: 1"=20'

SAN LUIS OBISPO COUNTY
DEPARTMENT OF PUBLIC WORKS
565 Tank Farm Road
San Luis Obispo, CA 93401
Phone (805) 781-5252 Fax (805) 781-1035

QUINCY ENGINEERING

TAR SPRING CREEK BRIDGE ON BRANCH MILL ROAD
LAYOUT
STA. 3-87.95 TO STA. 13-56.00

SHEET No. L-1

S:\Client\SLO-County\53-910 Branch Mill Rd\DWG\Design\Layout\53-910 Layout.dwg 8/13/2013 2:25 PM

NEPA/CEQA RE-VALIDATION FORM

DIST./CO./RTE.	05/SLO/CR
PM/PM	N/A
E.A. or Fed-Aid Project No.	BRLO-5949 (116)
Other Project No. (specify)	N/A
PROJECT TITLE	Branch Mill Rd Bridge Replacement
ENVIRONMENTAL APPROVAL TYPE	NEPA CE (23 USC 326)
DATE APPROVED	November 20, 2013
REASON FOR CONSULTATION (23 CFR 771.129)	*Check reason for consultation:* ☒ *Project proceeding to next major federal approval* ☐ *Change in scope, setting, effects, mitigation measures, requirements* ☐ *3-year timeline (EIS only)* ☐ ***N/A** (Re-Validation for CEQA only)*
DESCRIPTION OF CHANGED CONDITIONS	N/A

NEPA CONCLUSION - VALIDITY

Based on an examination of the changed conditions and supporting information: [*Check ONE of the three statements below, regarding the validity of the original document/determination (23 CFR 771.129). If document is no longer valid, indicate whether additional public review is warranted and whether the type of environmental document will be elevated.]*

☒ **The original environmental document or CE remains valid. No further documentation will be prepared.**

☐ **The original environmental document or CE is in need of updating; further documentation has been prepared and ☐ is included on the continuation sheet(s) or ☐ is attached. With this additional documentation, the original ED or CE remains valid.**

Additional public review is warranted (23 CFR 771.111(h)(3)) Yes ☐ No ☐

☐ **The original document or CE is no longer valid.**

Additional public review is warranted (23 CFR 771.111(h)(3)) Yes ☐ No ☐

Supplemental environmental document is needed. Yes ☐ No ☐

New environmental document is needed. Yes ☐ No ☐ (If "Yes," specify type: _____)

CONCURRENCE WITH NEPA CONCLUSION

I concur with the NEPA conclusion above.

[signature]	2-3-15	[signature]	2-3-15
Signature: Environmental Branch Chief	Date	Signature: Project Manager/DLAE	Date

CEQA CONCLUSION : *(Only mandated for projects on the State Highway System.)*

Based on an examination of the changed conditions and supporting information, the following conclusion has been reached regarding appropriate CEQA documentation: *(Check ONE of the five statements below, indicating whether any additional documentation will be prepared, and if so, what kind. If additional documentation is prepared, attach a copy of this signed form and any continuation sheets.)*

☐ **Original document remains valid. No further documentation is necessary.**

☐ **Only minor technical changes or additions to the previous document are necessary. An addendum has been or will be ☐ prepared and is ☐ included on the continuation sheets or ☐ will be attached. It need not be circulated for public review. *(CEQA Guidelines, §15164)***

☐ **Changes are substantial, but only minor additions or changes are necessary to make the previous document adequate. A Supplemental environmental document will be prepared, and it will be circulated for public review. *(CEQA Guidelines, §15163)***

☐ **Changes are substantial, and major revisions to the current document are necessary. A Subsequent environmental document will be prepared, and it will be circulated for public review. *(CEQA Guidelines, §15162)***
(Specify type of subsequent document, e.g., Subsequent FEIR:)

_____

☐ **The CE is no longer valid. New CE is needed. Yes ☐ No ☐**

CONCURRENCE WITH CEQA CONCLUSION

I concur with the CEQA conclusion above.

Signature: Environmental Branch Chief	Date	Signature: Project Manager/DLAE	Date

CATEGORICAL EXEMPTION/CATEGORICAL EXCLUSION DETERMINATION FORM

05-SLO-0-CR	N/A	N/A	BRLO-5949 (116)
Dist.-Co.-Rte. (or Local Agency)	P.M./P.M.	E.A/Project No.	Federal-Aid Project No. (Local Project)/Project No.

PROJECT DESCRIPTION: (Briefly describe project including need, purpose, location, limits, right-of-way requirements, and activities involved in this box. *Use Continuation Sheet, if necessary.)*

The County of San Luis Obispo, with financial support from the Federal Highway Administration, proposes to replace Bridge 49C-0143 and its approaches on Branch Mill Road at Tar Spring Creek, east of Arroyo Grande in the Arroyo Grande Valley, San Luis Obispo County. Constructed in 1949, Branch Mill Road Bridge is a steel girder two-lane bridge with concrete abutments straddling Tar Spring Creek. The purpose of the project is to improve public safety by replacing the structurally deficient bridge, providing standard roadway widths, and adjusting the roadway alignment.

(Project description continued on next page.)

CEQA COMPLIANCE *(for State Projects only)*

Based on an examination of this proposal and supporting information, the following statements are true and exceptions do not apply (See 14 CCR 15300 et seq.):

- This project falls within exempt class 3, 4, 5, 6 and/or 11, and it does not impact an environmental resource of hazardous or critical concern where designated, precisely mapped, and officially adopted pursuant to law.
- There will not be a significant cumulative effect by this project and successive projects of the same type in the same place, over time.
- There is not a reasonable possibility that the project will have a significant effect on the environment due to unusual circumstances.
- This project does not damage a scenic resource with[illegible] signated state scenic highway.
- This project is not located on a site included on any [illegible] uant to Govt. Code § 65962.5 ("Cortese List").
- This project does not cause a substantial adverse ch[illegible] cance of a historical resource.

N/A

CALTRANS CEQA DETERMINATION (Ch[illegible]

☐ **Exempt by Statute.** (PRC 21080[b]; 14 CCR 15260 et seq.)

Based on an examination of this proposal, supporting information, and the above statements, the project is:

☐ **Categorically Exempt. Class** . (PRC 21084; 14 CCR 15300 et seq.)

☐ **Categorically Exempt. General Rule exemption.** [This project does not fall within an exempt class, but it can be seen with certainty that there is no possibility that the activity may have a significant effect on the environment (CCR 15061[b][3].)

Print Name: Environmental Branch Chief	Print Name: Project Manager/DLA Engineer
Signature Date	Signature Date

NEPA COMPLIANCE

In accordance with 23 CFR 771.117, and based on an examination of this proposal and supporting information, the State has determined that this project:

- does not individually or cumulatively have a significant impact on the environment as defined by NEPA and is excluded from the requirements to prepare an Environmental Assessment (EA) or Environmental Impact Statement (EIS), and
- has considered unusual circumstances pursuant to 23 CFR 771.117(b).

CALTRANS NEPA DETERMINATION (Check one)

☒ **23 USC 326:** The State has determined that this project has no significant impacts on the environment as defined by NEPA, and that there are no unusual circumstances as described in 23 CFR 771.117(b). As such, the project is categorically excluded from the requirements to prepare an environmental assessment or environmental impact statement under the National Environmental Policy Act. The State has been assigned, and hereby certifies that it has carried out the responsibility to make this determination pursuant to Chapter 3 of Title 23, United States Code, Section 326 and a Memorandum of Understanding dated June 07, 2013, executed between the FHWA and the State. The State has determined that the project is a Categorical Exclusion under:

- ☐ **23 CFR 771.117(c): activity (c)(___)**
- ☒ **23 CFR 771.117(d): activity (d)(3)**
- ☐ **Activity ___ listed in Appendix A of the MOU between FHWA and the State**

☐ **23 USC 327:** Based on an examination of this proposal and supporting information, the State has determined that the project is a CE under 23 USC 327.

Brandy Rider	**Garin Schneider**
Print Name: Environmental Branch Chief	Print Name: Project Manager/DLA Engineer
Brandy Rider 11/20/13	Tammy Mar 11/20/13
Signature Date	Signature Date

Date of Categorical Exclusion Checklist completion: 11/8/13 | Date of ECR or equivalent : TBD

Briefly list environmental commitments on continuation sheet. Reference additional information, as appropriate (e.g., CE checklist, additional studies and design conditions).

June 7, 2013

05-SLO-0-CR	N/A	N/A	BRLO-5949 (116)
Dist.-Co.-Rte. (or Local Agency)	P.M./P.M.	E.A/Project No.	Federal-Aid Project No. (Local Project)/Project No.

Continued from page 1:

The existing bridge will be replaced with a new single span bridge, approximately 105 feet long by 32 feet wide. The new structure will be a pre-cast, pre-stressed concrete bulb T. The abutments will be located above the ordinary high water mark. Rock slope protection will be installed on the creek banks to protect the proposed roadway approaches. Concrete seat type abutments will be supported on deep foundations with driven 16-inch steel piles. A weir structure and concrete debris located below the bridge will be removed and the channel will be restored to a natural grade. Construction is expected to be completed during one construction season with all instream work to occur between June I and October 31 of 2014. Construction equipment will include cranes, dozers, excavators, pile-driving hammers, concrete pumps, concrete trucks, and concrete breakers.

To prepare for construction in dry conditions, the work area within the creek will be isolated from surface flow if water is present. A coffer dam will be constructed across the channel immediately upstream of the existing Branch Mill Road Bridge and remain in place for the duration of construction. Surface flow will travel through the work area via flexible or rigid pipe and return to the creek approximately 200-feet downstream. If pumps are utilized during dewatering, water will be pumped to a settling basin or upland areas to prevent suspended sediments from being discharged back into the creek.

After the work area is dewatered, demolition of the existing bridge and weir structure will be done using a hoe-ram concrete breaker. Concrete debris will be removed from the creek channel as necessary. Best management practices (BMPs) will be maintained throughout the demolition and construction periods to minimize erosion and sedimentation of the disturbed sections of the work area. These BMPs include, jute-netting, straw-fiber rolls, silt-fencing, and hay bales. After the structures have been removed, the channel will be graded to match the existing channel slopes found upstream and downstream of the bridge. A layer of 1/4-ton RSP will be placed on the north and south banks beneath the bridge. Bridge piles will be driven with an impact hammer for the bridge abutment foundations located above the OHWM. A concrete-mixing truck staged on the roadway will pour concrete into forms to create the support structures and bridge deck.

A temporary clear span bridge will be placed approximately 350 feet downstream of the existing bridge to allow contractor access and farm equipment passage during construction of the new bridge and demolition of the existing bridge. The roadway will be closed to the public during construction

Cultural Resources/ Section 106

A Historic Property Survey Report (September 2013) was prepared for the proposed project. Caltrans has made a Finding of No Historic Properties Affected.

Biological Resources/ Section 7

A Biological Assessment was prepared for the project (March 2013) Both the US Fish and Wildlife Service (FWS) and National Marine Fisheries Service (NMFS) were consulted. NMFS prepared a Biological Opinion (November 15, 2013) under Section 7 of the Endangered Species Act to address adverse effects to the federally threatened southern steelhead (*Oncorhynchus mykiss*).

FWS was consulted under Section 7 to address adverse effects to the federally endangered California red-legged frog (*Rana draytonii*). FWS agreed that the proposed project could proceed under the Programmatic Biological Opinion (PBO) for Projects Funded or Approved Under the Federal Highway Administration's Federal Aid Program (8-8-10-F-58). Both Biological Opinions are attached to this CE and incorporated here by reference.

The project as designed is consistent with the requirements of the Migratory Bird Treaty Act, Executive Order 11990 – Protection of Wetlands, and Executive Order 13112 – Invasive Species. Avoidance and minimization measures have been included in the project in order to comply with these Executive Orders.

The following information is incorporated here by reference:

Biological Assessment for the Branch Mill Road at Tar Spring Creek Bridge Replacement Project, San Luis Obispo County, California, March, 2013.

Natural Environment Study for the Branch Mill Road at Tar Spring Creek Bridge Replacement Project, San Luis Obispo County, California, February, 2013.

Attachments:

Biological Opinion: Branch Mill Road Bridge Replacement over Tar Spring Creek, San Luis Obispo County, California. National Marine Fisheries Service, West Coast Region. November 15, 2013.

Programmatic Biological Opinion for Projects Funded or Approved Under the Federal Highway Administration's Federal Aid Program (8-8-10-F-58). US Fish and Wildlife Service. May 4, 2011

UNITED STATES DEPARTMENT OF COMMERCE
National Oceanic and Atmospheric Administration
NATIONAL MARINE FISHERIES SERVICE
West Coast Region
1655 Heindon Road
Arcata, California 95521-4573

NOV 15 2013

In response refer to:
2013/9567

Tom Edell
California Department of Transportation, District 5
50 Higuera Street
San Luis Obispo, California 93401-5415

Dear Mr. Edell:

Enclosed is NOAA's National Marine Fisheries Service's (NMFS) Biological Opinion for the California Department of Transportation's (Caltrans) implementation of the proposed Branch Mill Road Bridge Replacement Project (proposed action) at Tar Spring Creek in San Luis Obispo County, California (Federal Aid Project # BRLO-5949 (116)). The Biological Opinion addresses effects of this action on threatened steelhead in accordance with Section 7 of the Endangered Species Act of 1973, as amended (16 U.S.C. 1531 *et seq.*).

The Biological Opinion concludes that Caltrans' proposed action is not likely to jeopardize the continued existence of the threatened South-Central California Coast (SCCC) Distinct Population Segment of steelhead. NMFS concludes that the proposed action may result in the incidental take of steelhead, therefore, an Incidental Take Statement is included in the Biological Opinion. The Incidental Take Statement includes Reasonable and Prudent Measures that are necessary and appropriate to minimize the incidental take of steelhead. Jay Ogawa is the principal contact for this consultation. Please contact him at (562) 980-4061 or via email at jay.ogawa@noaa.gov if you have a question concerning the Biological Opinion or if you would like additional information.

Sincerely,

for Jim Lecornsino

William W. Stelle, Jr.
Regional Administrator

Enclosure

cc: Margaret Paul, CDFW, San Luis Obispo
Roger Root, USFWS, Ventura
Administrative File: 151422SWR2013PR00110

Enclosure 1

BIOLOGICAL OPINION

AGENCY:	California Department of Transportation
ACTION:	Branch Mill Road Bridge Replacement over Tar Spring Creek, San Luis Obispo County, California.
CONSULTATION CONDUCTED BY:	National Marine Fisheries Service, West Coast Region
TRACKING NUMBER:	2013/9567
DATE ISSUED:	NOV 15 2013

I. CONSULTATION HISTORY

On April 16, 2013, NOAA's National Marine Fisheries Service (NMFS) received from the California Department of Transportation's (Caltrans) office in San Luis Obispo, California, a written request for formal consultation under Section 7 of the U. S. Endangered Species Act (ESA). The request concerns Caltrans' Branch Mill Road Bridge Replacement Project (proposed action), which crosses Tar Spring Creek east of the City of Arroyo Grande, in an unincorporated area of San Luis Obispo County. Tar Spring Creek is within the threatened South-Central California Coast (SCCC) Distinct Population Segment (DPS) of steelhead (*Oncorhynchus mykiss*). Tar Spring Creek is not designated critical habitat for this species. Caltrans is the lead Federal Agency for the proposed action in accordance with the *Memorandum of Understanding between the Federal Highway Administration and Caltrans Concerning the State of California's Participation in the Surface Transportation Project Delivery Program Pursuant to 23 USC 327*, which became effective October 1, 2012.

From May 2013 to September 2013, NMFS provided Caltrans with technical advice in letters, electronic communications, a site visit, and a teleconference to assist Caltrans avoid conflict between threatened steelhead and the proposed action. In this regard, NMFS offered recommendations on developing a project alternative that would improve the fish passage conditions and maintain the existing rearing conditions for juvenile steelhead within the project reach. After reviewing Caltrans' April 16, 2013, letter and biological assessment (BA), NMFS determined the information was insufficient to initiate consultation. On May 22, 2013, NMFS issued a letter that requested additional information and clarification of specific project design elements including pile driving, streambed grading, and information regarding potential channel response to the proposed action. Upon NMFS' receipt and review of the requested supplemental information on June 17, 2013, formal consultation was initiated on the same day. On July 16, 2013, NMFS issued a letter that requested further clarification of the proposed grading plan and ultimate fish passage conditions within the project reach. A conference call was held on September 4, 2013, with participants from Caltrans, San Luis Obispo County, and their consultants, to discuss the project design and the remaining information requested by NMFS.

On September 26, 2013, NMFS received an electronic communication from Caltrans containing the requested information, including the hydraulic analysis discussed on the conference call of September 4, 2013.

This biological opinion is based on the best scientific and commercial data available, including information included in the Caltrans' consultation packet, a biological assessment, hydraulic analysis, and observations of the creek and instream habitat noted by NMFS biologists during an on-site meeting with Caltrans, expected effects of the proposed action on steelhead, and the ecological literature. A complete administrative record for this consultation is maintained on file at NMFS' southern California office (501 W. Ocean Blvd., Suite 4200, Long Beach, California 90802).

II. DESCRIPTION OF THE PROPOSED ACTION

A. Proposed Action

The existing Branch Mill Road Bridge will be replaced with a new single-span bridge (105-feet long x 32-feet wide), absent instream piers, and the abutments will be located above the ordinary high water mark (OHWM). Rock-slope protection (RSP) will be placed on the northern and southern stream banks to protect the new bridge abutments. A weir structure and concrete debris located below the bridge will be removed and the channel will be restored to a natural grade. Construction of the proposed action is expected to be completed during one construction season with all instream work to occur between June 1 and October 31 of 2014. Construction equipment will include cranes, dozers, excavators, pile-driving hammer, concrete-mixing trucks, and concrete breakers.

B. Proposed Construction Activities

Proposed activities to prepare the action area for construction.—To prepare for construction in dry conditions, the work area within the creek will be isolated from surface flow and any steelhead within the affected area will be relocated, if water is present. A coffer dam will be constructed across the channel immediately upstream of the existing Branch Mill Road Bridge and remain in place for the duration of construction. Surface flow will travel through the work area via flexible or rigid pipe and return to the creek approximately 200-feet downstream. After the immediate project area is dewatered and all steelhead have been removed and relocated, and the water diversion is functioning as designed, steelhead will be able to migrate downstream volitionally.

Prior to the actual diversion of surface water, the entire work area will be surveyed for steelhead, which will be captured with seines and dipnets. Once relocations are complete, streamflow will be diverted slowly and in stages to ensure the creek does not dewater suddenly. As flows are diverted, continual surveys of the dewatered area will be undertaken by biologists, and all steelhead in the dewatered area will be captured and relocated from residual wetted areas. Surveys of the work area will continue for several hours to ensure that all steelhead are removed from the dewatered area and relocated to suitable habitat downstream within Tar Spring Creek.

Additional measures will be undertaken to minimize take of steelhead and adverse effects to aquatic habitat during the dewatering process and subsequent construction activities. If pumps are utilized during dewatering, water will be pumped to a settling basin or upland areas to prevent suspended sediments from being discharged back into the creek. Pump intakes will be screened with wire mesh no larger than 5-millimeters to prevent steelhead from entering the pump system. Upon completion of the proposed action, barriers to surface flow shall be removed.

Proposed construction activities .— After the work area is dewatered, Caltrans will begin demolition of the existing bridge and weir structure using a hoe-ram concrete breaker. Concrete debris will be removed from the creek channel as necessary. Best management practices (BMPs) will be maintained throughout the demolition and construction periods to minimize erosion and sedimentation of the disturbed sections of the work area. These BMPs include, jute-netting, straw-fiber rolls, silt-fencing, and hay bales. After the structures have been removed, the channel will be graded to match the existing channel slopes found upstream and downstream of the bridge. A layer of 1/4-ton RSP will be placed on the north and south banks beneath the bridge. Bridge piles will be driven with an impact hammer for the bridge abutment foundations located above the OHWM. A concrete-mixing truck staged on the roadway will pour concrete into forms to create the support structures and bridge deck. All vehicle and equipment maintenance, material storage, concrete washouts and sanitary facilities will be located outside of creek limits at least 65-feet from wetland or aquatic areas.

Proposed post-construction activities.—Following construction of the proposed action, Caltrans proposes to implement a Habitat Mitigation and Monitoring Plan (HMMP). The plan provides Caltrans' approach for the restoration, enhancement, and replacement of wildlife and aquatic habitat temporarily and permanently lost as a result of the proposed action. To mitigate for a loss of wildlife habitat at a ratio of 3:1, a total minimum replacement area of 0.75 acres will be enhanced and revegetated as part of the proposed action. The permanent impact mitigation area will be located immediately downstream of the project footprint on the north bank. Temporarily disturbed areas within the action area will be covered in erosion control blankets or geotextiles and seeded with native grasses, and vegetation in the action area will be enhanced at a 1:1 ratio. Additionally, willow cuttings will be planted within the interstitial spaces of the RSP to mitigate for temporary impacts. Caltrans' proposes to implement a 5-year monitoring plan following completion of the proposed action to ensure the biological and hydrologic resources within the action area are restored and enhanced. Monitoring of the revegetated areas will occur quarterly for the first 3 years, semi-annually for the last 2 years, and after large storm events. The monitoring plan does not propose a list of actions with regard to monitoring the potential hydraulic effects that may result from the proposed action.

C. Action Area

The action area refers to all areas to be affected directly or indirectly by the proposed action and not merely the immediate area involved in the action (50 CFR § 402.02). The action area includes the linear extent (upstream and downstream) of the Branch Mill Road crossing over Tar Spring Creek and encompass the riparian corridor to the top of bank. The action area extends approximately 85-feet upstream of the existing bridge centerline where the upper extent of the

water diversion will be placed, and 350-feet downstream from the end of the diversion, where construction effects such as elevated turbidity are anticipated to cease. The approximate length of Tar Spring Creek within the action area is 550-feet.

D. Interrelated and Interdependent Activities

Interrelated actions are those actions that are part of a larger action and depend on the larger action for their justification. Interdependent actions are those that have no independent utility apart from the proposed action (50 CFR § 402.02). There is no known action interrelated to or interdependent on the proposed action.

III. STATUS OF THE SPECIES AND HABITAT

This biological opinion considers the potential effects of the proposed action on the threatened SCCC steelhead DPS and their aquatic habitat. For this reason, the status of the SCCC steelhead DPS, their life history and habitat requirements, and recent factors affecting populations are described as follows.

A. Status of South-Central California Coast Steelhead

The threatened SCCC DPS of steelhead extends from the Pajaro River, Santa Cruz County, south to, but not including the Santa Maria River, Santa Barbara County. NMFS characterized the abundance of steelhead in the DPS when the species was originally listed (August 18, 1997, 62 FR 43937) and cited this information as the basis for the recent relisting of the SCCC DPS of steelhead as threatened (January 5, 2006, 71 FR 834). In the mid-1960's the California Department of Fish and Wildlife estimated an annual run size of 17,750 adult steelhead in this coastal DPS. Recent estimates for those SCCC rivers where comparative abundance information is available generally show a substantial decline during the last 30 years. For instance though no recent estimate for total run size exist for the entire DPS, there are recent run size estimates available for five rivers (the Pajaro River, Salinas River, Carmel River, Little Sur River, and Big Sur River). The total annual run of steelhead for these five rivers is currently estimated at fewer than 500 adults compared with a total of 4,750 for the same rivers in 1965, which suggests a substantial decline for this entire DPS from 1965 levels. Abundance observations for adult steelhead in the Carmel River are the only time series within SCCC DPS with data gathered for 1964 through 1977 and 1988 to 2002 (Good *et al.* 2005). Based on these data there was a declining trend in the population from 1964 to the early 1990's to 2002. Despite this recent increase in abundance the estimated population of steelhead in this system is still less than 5% of historic population estimates and it is uncertain if this upward trend will be sustained into the future.

As part of the assessment and relisting of SCCC steelhead, NMFS convened a biological review team (BRT) composed of an expert panel of scientists. The BRT evaluated the viability and extinction risk of naturally spawning populations within each DPS. The BRT found high risks to abundance, productivity, and the diversity of the SCCC DPS and expressed particular concern for the DPS's connectivity and spatial structure. When a species is listed, Section 4(c)(2) of the

ESA requires a review of the status of that species at least once every five years to determine if a change in status is necessary. During the most status review for SCCC steelhead (NMFS 2011) it was determined that there is little evidence to suggest that the biological status of the overall population has changed appreciably and factors for the populations decline appeared to have essentially remained unchanged. As a result, the review concluded that the SCCC population of steelhead should continue to be listed as a threatened population.

B. Life History and Habitat Requirements

The major freshwater life history stages of steelhead involve freshwater rearing and emigration of juveniles, upstream migration of adults, spawning, and incubation of embryos (Shapovalov and Taft 1954, Barnhart 1991, Meehan and Bjornn 1991, Moyle 2002). Steelhead juveniles rear in freshwater for one to three years before migrating to the ocean, usually in the spring, where they may remain for up to four years. The timing of outmigration appears to be influenced by photoperiod, streamflow, and temperature (Shapovalov and Taft 1954). In some drainages, juvenile steelhead may rear in lagoon or estuary habitats for several weeks prior to ocean entry.

Steelhead grow and reach maturity at age two to four while in the ocean. In south-central California, adults generally migrate to natal streams for spawning during December through March (Fukushima and Lesh 1998), but some adults may not enter coastal streams until late spring, depending on flow conditions. Adults may migrate several to hundreds of miles in some watersheds to reach their spawning grounds. Although spawning may occur during January through April, the specific timing of spawning may vary a month or more among streams within a region. Steelhead do not necessarily die after spawning and may return to the ocean, sometimes repeating their spawning migration one or more years. Female steelhead dig a nest in the streambed and then deposit their eggs. After fertilization by the male, the female covers the nest with a layer of gravel, and the embryos incubate within the gravel pocket. Hatching time varies from about three weeks to two months depending on water temperature. The young fish emerge from the nest about two to six weeks after hatching.

Habitat requirements of steelhead in streams generally depend on the life history stage. Habitat for south-central California steelhead consists of water, substrate, and adjacent riparian zone of estuarine and riverine reaches of coastal river basins, and major rivers. Generally, streamflow volume, water temperature, and water chemistry must be appropriate for adult upstream migration and juvenile downstream migration. Low streamflow, high water temperature, physical barriers, low dissolved oxygen, and high turbidity may delay or halt upstream migration of adults and timing of spawning, and downstream migration of juveniles and subsequent entry into estuary, lagoon, or ocean. These factors affect steelhead to varying degrees in south-central California watersheds, depending on the level of anthropogenic disturbance and stream conditions within the watershed. Suitable water depth and velocity, and substrate composition are the primary requirements for spawning, but water temperature and turbidity are also important. Dissolved oxygen concentration, pH, and water temperature are factors affecting survival of incubating embryos. Fine sediments, sand and smaller particles, may fill interstitial spaces between substrate particles, thereby reducing water flow and dissolved oxygen levels within a nest. Juvenile steelhead require living space (various combinations of water depth and velocity), shelter from predators and harsh environmental conditions, adequate food resources,

and suitable water quality and quantity, for ontogeny and survival during summer and winter. Young-of-the-year and yearling steelhead generally use shallow water habitats such as riffles and runs during much of the year where these habitats exist (Roper *et al.* 1994). However, young-of-the-year and older juveniles may seek cover and cool water in pools during periods of elevated water temperature and low flows (Nielsen *et al.* 1994, Matthews and Berg 1997).

C. Regional Climatic Variation and Trends

The interaction of changing climate conditions with other stressors such as habitat fragmentation is likely to result in additional threats to natural resources (McCarty 2001), including the viability of steelhead populations. In the southwest region (southern Rocky Mountains to the Pacific Coast), the average temperature has already increased roughly 1.5 °F compared to a 1960-1979 baseline period. By the end of the century, average annual temperature is projected to rise approximately 4 to 10 °F above the historical baseline, averaging over the entire region (Karl *et al.* 2009). The southern California region is experiencing an increasing trend in droughts, as measured by the Palmer Drought Severity Index from 1958 to 2007 (Karl *et al.* 2009). With regard to the character of precipitation, the southwest region, including California, showed a 16% increase in the number of days with very heavy precipitation from 1958 to 2007. Generally for most areas of the country, the fraction of precipitation falling as rain versus snow has increased during the last 50 years (Karl *et al.* 2009). Indicators of climate variability in the western United States exhibit trends toward an earlier spring since the mid-1970s (Cayan *et al.* 2001).

With regard to expected climate trends and projections on an ecoregional scale within south-central California (PRBO Conservation Science 2011), regional climate models[1] project mean annual temperature increases of 1.6 to 1.9 °C by 2070. Using a regional climate model, Bell et al. (2004) project a significant increase in some extreme temperature events in the central coast. Most of the regional climate models agree that the projected impacts of climate change on thermal conditions in central western California will be warmer winter temperatures, earlier warming in the spring, and increased summer temperatures. Although precipitation models show more uncertainty in precipitation projections compared to temperature models (PRBO Conservation Science 2011), Snyder and Sloan (2005) project mean annual precipitation in central western California will decrease by 1.6 cm (2.8%) by the end of the 21st century.

D. Population Viability

One prerequisite for predicting the effects of an action on a species (including establishing a point of reference for the effects analysis) involves an understanding of whether the broad population is likely to experience a reduction in the likelihood of being viable that is the hypothetical state(s) in which extinction risk of the broad population is negligible and full evolutionary potential is retained (Boughton *et al.* 2006). By definition, a viable salmonid population (VSP) is an independent population of any Pacific salmonid (genus *Oncorhynchus*) that has a negligible risk of extinction due to threats from demographic variation (random or

[1] See page 43 of PRBO Conservation Science (2011) for a summary of all models referenced, emission scenarios and outputs.

directional), local environmental variation, and genetic diversity changes (random or directional) over a 100-year time frame (McElhaney *et al.* 2000). Other processes contributing to extinction risk (catastrophes and large-scale environmental variation) are also important considerations, but by their nature they need to be assessed at the larger temporal and spatial scales represented by DPSs or other entire collections of populations. An independent population is any collection of one or more local breeding units whose population dynamics or extinction risk over a 100-year time period is not substantially altered by exchanges of individuals with other populations. Generally, an independent population is contained within a distinct stream or possibly an entire watershed, and represents a subunit of the entire DPS. Four principal parameters are used to evaluate the long term viability and conversely the extinction risk for the threatened SCCC DPS of steelhead. They are: (1) abundance; (2) population growth rate; (3) population spatial structure; and (4) population diversity. These specific parameters are important to consider because they are predictors of extinction risk and reflect general biological and ecological processes that are critical to the growth and survival of steelhead populations, and they are measurable (McElhany *et al.* 2000). To assess viability, guidelines or decision criteria are defined for each of the four parameters to further the viability evaluation (McElhany *et al.* 2000). Population viability for steelhead is based on four key concepts that provide the basis for judging the persistence of a population in the wild. The bases for these concepts can be found in the many publications regarding population ecology, conservation biology, and extinction risk (e.g., Pimm *et al.* 1988, Berger 1990, McElhany *et al.* 2000, Primack 2004, Boughton *et al.* 2006). The four concepts are outlined below.

1. Abundance

Information about a population's size or abundance provides an indication of the sort of extinction risk a population faces. Small populations face a host of risks intrinsic to their low abundance; conversely, large populations exhibit a greater degree of resilience. Small populations tend to be at greater risk of extinction than large populations primarily because several processes that affect population dynamics operate differently in small populations than they do in large populations. Generally, the greater the size of a steelhead population, the greater the chance of it being viable in the long term. Within the threatened SCCC DPS of steelhead, abundance has been severely reduced from historic levels (Williams *et al.* 2011) and this has negative implications for long term viability for this DPS.

2. Population Growth Rate

Population growth rate and factors that affect population growth rate provide information on how well a population is "performing" in the habitats it occupies during the life cycle. These parameters, and related trends in abundance, reflect conditions that drive a population's dynamics and thus determine its abundance. Changes in environmental conditions, including ecological interactions, can influence a population's intrinsic productivity or the environment's capacity to support a population, or both. In regard to steelhead, the greater the productivity of a steelhead population the greater its ability to recover from environmental disturbance and the greater its viability. Because of the low abundance of steelhead in south-central California, the population growth rate has also been reduced, making the DPS less resilient to disturbance, and this has decreased the likelihood that the DPS would be viable over the long term.

3. Spatial Structure

A population's spatial structure is made up of both the geographic distribution of individuals in the population and the processes that generate that distribution. A population's spatial structure depends fundamentally on habitat quality, spatial configuration, and dynamics as well as the dispersal characteristics of individuals in the population. Understanding the spatial structure of a population is important because the population structure can affect evolutionary processes and, therefore, alter the ability of a population to adapt to spatial or temporal changes in the species' environment over the long term (McElhany *et al.* 2000). Generally, steelhead populations that are thinly distributed over space are susceptible to experiencing poor population growth rate and loss of genetic diversity which result in lowered viability. Within the threatened SCCC DPS of steelhead, anthropogenic activities such as the introduction of migration barriers have substantially reduced the number of watersheds (or portions of watersheds) that are currently accessible to steelhead. This has significantly reduced the spatial structure of the DPS (Boughton *et al.* 2005).

4. Diversity

Steelhead populations possess a suite of life history traits that exhibit considerable diversity within and among populations, and this variation has important effects on population and DPS viability. Some of these varying traits are anadromy, timing of spawning, emigration, and immigration, fecundity, age-at-maturity, behavior, physiological and genetic characteristics, to mention a few. In terms of steelhead population viability, the more diverse the assortment of life history traits (or the more these traits are not restricted), the more likely the steelhead population is to survive a spatially and temporally fluctuating environment over the long term. Because anthropogenic activities have severely reduced and eliminated the expression of some life history traits of steelhead in south-central California, the long term viability of the SCCC DPS has declined as well.

In summary, the threatened SCCC DPS of steelhead has been severely impacted by anthropogenic factors, and this has negatively affected the abundance, productivity, spatial structure, and diversity of the entire DPS. The threatened SCCC DPS of steelhead is currently not viable and is at risk extinction. This finding is consistent with conclusions of past and recent technical reviews (Busby *et al.* 1996, Good *et al.* 2005, Williams *et al.* 2011), and the formal listing determinations for the species (NMFS 1997, 2006).

IV. ENVIRONMENTAL BASELINE

Tar Spring Creek is a perennial stream that originates south of Tar Spring Ridge and north of Newsome Ridge in San Luis Obispo County. The watershed drains approximately 19-square miles and annually contributes up to 1400-acre feet of natural flow and agricultural runoff (DWR 2002). From its headwaters, Tar Spring Creek travels 9.47-miles west through rural residential and agricultural areas before its confluence with Arroyo Grande Creek, approximately 1/2-mile downstream of the action area. There are no barriers to upstream steelhead migration between

the confluence with Arroyo Grande Creek and the Branch Mill Road Bridge. In the vicinity of the action area, the stream channel is highly incised, has steep banks, and supports an extensive riparian corridor.

A. Status of Aquatic Habitat in the Action Area

Aquatic habitat within the action area of Tar Spring Creek consists of shallow pools, runs, and riffles. The active channel width in the action area is approximately 24 to 28-feet. The north and south banks of the creek below the roadway are partially covered in RSP and mainly devoid of riparian vegetation. Some of the RSP has fallen into the active channel below the bridge. The stream bed is composed of cobble, gravel, and fine sediment. Overhanging branches and emergent freshwater marsh species provide instream cover within the action area. Creek flows typically exceed the ordinary high water mark in the spring and are then confined to the thalweg and shallow pools in the summer and fall. Riparian trees within the action area include arroyo willow (*Salix lasioepis*), western sycamore (*Platanus raceosa*), and coast live oak (*Quercus agrifolia*) that create a dense canopy cover and extensive shade over the stream. Overall, suitable rearing habitat (*i.e.*, natural cover, shelter, pools, water quality/quantity, and riparian) exists throughout the action area. Spawning habitat in the action area is degraded based on the poor substrate conditions within the action area. Finally, steelhead migration through the action area is impeded by a weir structure below the Branch Mill Road Bridge.

B. Status of Steelhead in the Action Area

Although no estimate of total steelhead abundance in Tar Spring Creek apparently exists, the recent presence of juvenile *O. mykiss* in the action area has been documented. In 2011, Caltrans' contract biologists observed several juvenile *O. mykiss* immediately south of the Branch Mill Road Bridge within the action area. The number of steelhead present in the action area is unknown to NMFS. Inferences of potential steelhead numbers in Tar Spring Creek may be drawn by examining steelhead abundance data in Arroyo Grande Creek to which Tar Spring Creek is a tributary. Juvenile steelhead abundance was surveyed in Arroyo Grande Creek immediately downstream of it confluence with Tar Spring Creek in October 2006 (Swanson 2006). A total of 69-juvenile steelhead were observed via snorkeling. This provided a combined (sample units 10-13) steelhead density of 13.9 (Age 1+ and 2+ steelhead per 100-feet sampled) within the section of Arroyo Grande Creek just downstream of Tar Spring Creek. Based on habitat conditions (i.e., fewer and smaller pools and lower overall stream flow) the numbers of steelhead in Tar Spring Creek within the project area are expected to be much lower than in Arroyo Grande Creek. Because construction of the proposed action will occur during the rearing season juvenile steelhead are expected to be present. Adult steelhead are not expected to be present within the action area during the time of construction activities (June 1 to October 31).

C. Factors Affecting Species Environment in the Action Area and Vicinity

The following factors largely determine the quality of steelhead habitat within the action area of Tar Spring Creek. The predominant factors affecting instream habitat within the action area are: agricultural development, road encroachment, and migration barriers. The threats of these factors to threatened steelhead in the action area are described in greater detail below.

1. Agricultural Development

Cultivated fields, open farmland, and orchards exist in the vicinity of the action area. There is potential for increased turbidity or nutrient loading due to runoff from agriculture and livestock areas adjacent to the creek. High turbidity concentrations can cause fish mortality, reduce fish feeding efficiency and decrease food availability (Berg and Northcote 1985, McLeavy *et al.* 1987, Gregory and Northcote 1993, Velagic 1995). Agricultural runoff can transfer nutrients and pesticides to the creek, which can in turn lower dissolved oxygen levels by increasing algae growth in streams and decreasing forage for steelhead (Spence *et al.*, 1996). In addition, demands on water resources may occur from upstream agricultural activities. It is unknown to what extent water demands may affect the quantity and extent of surface water and essential features of steelhead habitat within the action area. Lowered stream flow or stream drying could result in a significant reduction or loss of habitat and even mortality to steelhead (Spence *et al.*, 1996). These impacts if occurring have the potential to adversely impair steelhead survival within Tar Spring Creek.

2. Road Encroachment

Branch Mill Road traverses the creek within the action area, and the location of the road likely results in runoff from the road surface entering the creek during rainstorms, which reduces the water quality within the action area to an unknown degree. The effects on water quality from road surface runoff are most likely to occur during the winter when there is runoff during rainstorms. Runoff from road surfaces contains dirt, oils, automotive fluids, and petrochemicals that are harmful to aquatic life, including steelhead (Spence *et al.* 1996). Additionally, the crossing has contributed to the confinement of the stream channel and diminished riparian vegetation.

3. Migration Barrier

An impediment to upstream steelhead migration within the action area is located under the Branch Mill Road Bridge as it traverses Tar Spring Creek. A concrete weir structure (approximately 20-feet wide x 2-feet thick x 3-feet high) has been undermined by the creek and under certain flow conditions likely prevents upstream steelhead passage and thereby reduces opportunities for steelhead to access additional spawning and rearing areas higher in the watershed. As a result, overall steelhead productivity and rearing capacity can be reduced, and thereby reduce the viability of the steelhead population in Tar Spring Creek including the action area.

V. EFFECTS OF THE PROPOSED ACTION

This section describes potential effects of the proposed action on steelhead and aquatic habitat for this species. To identify the potential effects, NMFS reviewed the proposed action and ecological literature concerning the effect of habitat changes on steelhead and aquatic habitat, and carefully considered the type, amount, and extent of habitat changes that are expected to result from the proposed action. A general knowledge of physical and biological processes,

population dynamics, life history, and habitat requirements of steelhead supplemented the literature review, particularly where there was little or no information concerning effects of an impact on steelhead or the aquatic environment. In considering effects on aquatic habitat, NMFS assessed whether implementation of the proposed action would allow aquatic habitat to remain functional, or allow for essential elements to become functionally established, serving the intended conservation role for the species.

Construction activities are expected to affect steelhead through dewatering, fish relocation, temporary increased turbidity, and pile installation. Effects to aquatic habitat in the action area include the temporary loss and disturbance of instream and riparian habitat during construction activities. The potential effects of these activities are presented in detail below.

A. Effects on Threatened Steelhead

Dewatering. —Stream flow diversion and dewatering of the immediate work area is expected to temporarily disrupt steelhead behavior patterns (*i.e.*, rearing, migrating), cause temporary loss of aquatic habitat, as well as loss of invertebrate forage for steelhead within the dewatered work area. Approximately 200-linear feet of Tar Spring Creek will be dewatered for up to 5-months during the dry season (June 1 through October 31) to allow construction work to proceed in dry conditions.

Dewatering will temporarily preclude the action area from serving as a freshwater rearing site and a freshwater migration corridor for threatened steelhead. The ability of juvenile steelhead to migrate upstream through the action area will be hindered for several months while the diversion is in place. Juveniles located downstream of the diversion will remain in pool and riffle habitats or access Arroyo Grande Creek until the work is complete. Downstream migration of juvenile steelhead from reaches upstream of the action area is not expected to be significantly affected by the diversion since downstream migrants would be able to migrate from upstream to downstream of the action area through the diversion pipe. Adult steelhead are not expected in the creek and, therefore, are not likely to be affected by construction activities.

Aquatic macroinvertebrate forage will be temporarily reduced or eliminated within the action area as a result of isolating the workspace from flowing water. Aquatic insects provide a source of food for instream fish populations, and may represent a substantial portion of food items consumed by juvenile steelhead. Effects to aquatic macroinvertebrates resulting from stream flow diversions and dewatering will be temporary because construction activities will be temporary, and rapid recolonization (about one to two months) of the restored channel area by macroinvertebrates is expected following rewatering (Cushman 1985, Thomas 1985, Harvey 1986). In addition, the effect of macroinvertebrate loss on juvenile steelhead is expected to be negligible because food from upstream sources would be available downstream of the dewatered area via drift. Based on the foregoing, the temporary loss of aquatic macroinvertebrates as a result of dewatering activities is not expected to adversely affect steelhead.

Ultimately, the loss of aquatic habitat associated with dewatering, and the impedance of migration through the action area will be temporary and is not expected to result in lethal effects, as relocated steelhead will be able to use all aquatic habitat downstream of the dewatered portion

of the creek, which is of similar quality as the dewatered area (J.Ogawa, NMFS, 2013, pers. obs.). Connectivity between the upstream and downstream stream reaches will be restored after the water diversion is removed and creek flows are returned to the dewatered area. Overall, effects to steelhead from water diversion are expected to be non-lethal and temporary.

Fish Relocation. — During the dewatering process in the creek, the water diversion could harm rearing juvenile steelhead by concentrating or stranding them in residual wetted areas before they are relocated and rearing juvenile steelhead could be killed if they become stranded and are not moved out of the diversion area. In addition, steelhead are expected to move to adjacent areas of aquatic habitat during water diversion (Clothier 1953, Clothier 1954, Kraft 1972, Campbell and Scott 1984).

However, to reduce the likelihood of harm and mortality to juvenile steelhead within the area to be dewatered, biologists will survey the stream within the action area prior to and during the water diversion, and will capture and relocate steelhead to the nearest suitable habitat within the creek. Biologists will survey beneath small boulders and areas where juvenile steelhead can hide to the maximum extent practicable in order to relocate steelhead out of the action area. In the event that some steelhead are missed by the biologists and stranded in the diversion area, some mortality may be expected. The specific qualifications and expertise of the biologists, and whether the biologist would be empowered to halt construction activities for the benefit of reducing harm or mortality of steelhead, are not described in the proposed action. Additionally, the proposed action does not include a provision to notify NMFS of the number of steelhead that may be harmed or injured as a result of the construction activities including the dewatering.

Sites selected for relocating juvenile steelhead should have ample habitat, but relocated fish may compete with other fish, potentially increasing competition for available food and habitat (Keeley 2003). Stress from crowding, including increased competition for food among juvenile steelhead in the relocation areas is expected to be temporary, because when the proposed action is finished steelhead will be able to redistribute in the action area. Once the proposed action is complete and the water diversion is removed, living space for juvenile steelhead will return to the dewatered action area. Fish relocation efforts are expected to significantly minimize project impacts to juvenile steelhead by temporarily removing them from areas where they would have potentially experienced high rates of injury and mortality.

Based on steelhead survey results provided by Swanson Hydrology and Geomorphology (2006), and habitat conditions in the action area, NMFS expects no more than 20 juvenile steelhead will need to be relocated. NMFS expects that 5 juvenile steelhead may be injured or killed as a result of the proposed action. This estimated mortality is based on NMFS' experience and knowledge gained on similar projects in San Luis Obispo County during the last several years. Based on NMFS' general familiarity of steelhead abundance in south-central California in general, and San Luis Obispo County streams in particular, the anticipated number of juvenile steelhead that may be injured or killed as a result of the proposed action is likely to represent a small fraction of the overall watershed-specific populations and the entire SCCC DPS of threatened steelhead. Therefore, the effects of the relocation on steelhead are not expected to give rise to population-level effects.

Sedimentation and Turbidity. —Although the action area will be dewatered during the time of construction, heavy equipment and people working within the stream channel and along the stream banks will likely mobilize fine sediment from the channel bed and increase turbidity (effects to water quality are addressed in the section entitled *Effects on Aquatic Habitat*). Short-term increases in turbidity are anticipated to occur during water diversion and dewatering activities, during the first flush of the stream channel when it is re-watered, and during the first rainstorms which may mobilize disturbed sediments within the action area. This could affect steelhead that residing up to 350-feet downstream from the end of the diversion through a variety of mechanisms. High concentrations of suspended sediment can disrupt normal feeding behavior, reduce feeding efficiency, and decrease food availability (Cordone and Kelly 1961, Bjornn *et al.* 1977, Berg and Northcote 1985). Chronic elevated sedimentation and turbidity can also reduce salmonid growth rates (Crouse *et al.* 1981), increase salmonid plasma cortisol levels (Servizi and Martens 1992), cause salmonid mortality (Cordone and Kelly 1961, Sigler *et al.* 1984), and reduce the survival and emergence of salmonid eggs and fry (Chapman 1988). Even small pulses of turbid water can displace salmonids from established territories to less suitable habitat and increase competition and predation, thereby reducing survival (Waters 1995).

However, NMFS does not expect acute effects on steelhead in Tar Spring Creek because increases in sedimentation and turbidity levels resulting from construction activities are expected to be minimal and temporary (*i.e.*, a few hours during dewatering, and a few hours after rewatering to about one day during the first storm). This is because the area where the construction will take place is relatively small and work within the streambed is limited. Also, much of the research mentioned above was carried out in a laboratory setting with turbidity levels significantly higher than those expected to result from project activities. BMPs and sediment control devices deployed during construction (e.g., jute-netting, straw-fiber rolls, silt-fencing, hay bales, and settling basins) are expected to minimize the effects of sedimentation and turbidity. The success of these measures has been documented during other similar projects (M. Larson, CDFG, 2008, personal communication), though the efficacy of the proposed measures should be verified in the field at the time of the proposed action. NMFS expects that the disturbance within the stream channel will not result in increased sedimentation within the creek in the long term.

Pile Installation. —Available information indicates that fish may be injured or killed when exposed to elevated levels of underwater sound pressure generated from driving steel piles with impact hammers (Hastings and Popper 2005). Injuries to fish include hemorrhaging and the rupture of internal organs, including the swimbladder and kidney. Death can be instantaneous, occur within minutes after exposure, or occur several days later. Other sustained injuries may not lead to death but could result in reduced fitness, ability to forage, increase predation risk, impact sensory functions, and disrupt migration and behavior patterns. Therefore, the potential impact of pile driving on steelhead at Tar Spring Creek is of concern.

The Fisheries Hydroacoustic Working Group (FHWG[2]), uses a duel metric threshold criterion to correlate physical injury to fish exposed to underwater producing pile driving with impact

[2] Member agencies of the FHWG include Caltrans, Federal Highways Administration, NMFS (Northwest and Southwest Regions), United States Fish and Wildlife Service, Oregon and Washington Departments of Transportation.

hammers. Specifically, this includes single strike peak sound pressure level (SPL) of 206 decibels (dB) and a cumulative sound exposure level (SEL) of 187 dB for fish two grams or greater, or 183 dB for fish less than 2 grams. If either threshold is exceeded, then physical injury is assumed to occur. The work area will be dewatered and therefore none of the piles will be installed in or near surface waters. The sound energy originating from the ground as a result of pile driving activities will be dominated by low frequencies which do not propagate efficiently through water, particularly shallow water (approximately 1-foot deep) existing beyond the dewatered work area, approximately 80-feet upstream or downstream. At a distance of 26-feet from the driven pile, peak SPL is expected to be between 172 dB and the SEL to be 151 dB. These levels are below those that cause injury to juvenile steelhead. To further minimize the effects of pile driving on steelhead, pile driving is to occur during the dry season (June 1 and October 31). However, Caltrans proposes no method to verify that noise owing to pile driving will remain below the sound levels that are considered harmful to steelhead.

B. Effects to Aquatic Habitat

The proposed action will temporarily impact approximately 0.05-acres of steelhead aquatic habitat. Aquatic habitat for steelhead in the action area includes sites for migration and rearing. The potential effects of the proposed action to aquatic habitat for the species include the temporary loss of habitat during dewatering, disturbance of the streambed and banks, removal of riparian vegetation, and water-quality alterations. The temporary loss of channel and associated stream banks (within the dewatered area) for up to a 5-month period is not expected to permanently adversely affect essential physical or biological features associated with steelhead aquatic habitat. These features will return to their current condition or be improved upon completion of the proposed action.

With regard to potential water-quality alterations, Caltrans proposes precautionary measures to reduce the likelihood that onsite effects would extend downstream; dewatering the work area is expected to greatly advance this objective. Positioning heavy equipment and accumulation of construction debris within the work area remain a concern because the proposed action does not appear to include a provision to guard against the minor accidental releases of petroleum products or construction debris to the dewatered channel bed or flowing water. However, the precautionary measures included in the proposed action are largely expected to be reasonably effective for ensuring that the value of aquatic habitat for steelhead will not be appreciably reduced in the action area beyond the temporary effects noted here.

Because the proposed bridge will be constructed without instream piers and the weir-structure will be removed, the potential exists that the current rearing conditions would remain the same. The proposed grading of the stream bed is intended to mimic channel slopes found in the vicinity of the project area and retain the existing substrate size and thalweg. However, the final grading plan has not been submitted to NMFS for review and, therefore, the final characteristics and conditions of the creek channel within the action area are uncertain (See Appendix A for additional information). In this regard, this effects assessment assumes the following: (1) Caltrans will continue to coordinate with NMFS on details regarding the final grading plans,

including submission of the subject plans to NMFS for review and comment, and (2) Caltrans will revise the grading plan according to NMFS guidance when such revisions are necessary to ensure the proposed habitat and fish passage conditions are attained.

Although the findings obtained from the hydraulic computations and a one-dimensional (1-D) HEC-RAS model suggest that the proposed action will likely improve fish passage conditions by stabilizing the channel without any substantial aggradation or degradation, interpreting the 1-D model output has inherent limitations and the bathymetry data used to develop this model was incomplete. As a result, the potential exists that incision and scour over a broad area may be observed following implementation of the proposed action, and it is conceivable that some level of scour could impact existing fish passage conditions by the formation of a head-cut upon removal of the weir structure. Therefore, monitoring the action area following implementation of the proposed action would be appropriate to assess whether a fish passage problem exists and if the proposed action is functioning as designed. Additionally, the monitoring must be of sufficient duration to account for natural variation in rainfall and creek discharge and ensure reasonable assessment of channel incision and scour. However, the proposed action does not include such monitoring.

Riparian vegetation provides numerous functional values to fish that may benefit migrating, rearing, or spawning steelhead. Riparian vegetation enhances stream habitat by providing shade, cover, and shelter for stream fish in the form of overhanging branches, large-woody debris such as rootwads, undercut banks, and scour pools (Wesche *et al.* 1987, Platts 1991, Wang *et al.* 1997, Bilby and Bisson 1998, Naiman *et al.* 2000). Riparian zones enhance water quality by reducing the input of fine sediments and pollutants into streams (Karr and Schlosser 1978, Lowrance *et al.* 1985). Riparian vegetation also provides a source of drift forage for juvenile steelhead (Wesche *et al.* 1987). The proposed action is expected to result in the temporary affect these elements of aquatic habitat within the action area of Tar Spring Creek due to a loss of some shade and cover where riparian vegetation is currently present along the north and south banks of the active channel. Indirect effects associated with the removal of riparian vegetation can result in increased water temperatures (Mitchell 1999, Opperman and Merenlender 2004) and decreased water quality (Lowrance *et al.* 1985, Welsch 1991) attributable to a loss of shade and cover over the active channel. However, the loss of trees and vegetation as a result of the proposed action are expected to be temporary, because native riparian vegetation will be replanted throughout the disturbed areas, including within the RSP, to minimize impacts from project construction. Until the action area is recovered, riparian vegetation located upstream and downstream of the project reach is expected to maintain stream temperatures and provide cover for steelhead during the interim conditions. Based on NMFS' experience observing the response of riparian vegetation to human-made disturbances (M. McGoogan, NMFS 2013, personal communication), the riparian zone is expected to recover from the project 1- to 2-years following the completion of construction. Overall, the amount of riparian vegetation affected by the proposed action is not expected to diminish the overall functional value of the migratory corridor and freshwater rearing sites within the action area. This is expected to be verified through the findings obtained from Caltrans' proposed vegetation-monitoring program under the proposed action.

C. Summary of Effects

The effects of the proposed action on steelhead and aquatic habitat are: (1) the temporary loss and alteration of aquatic habitat for the approximate 5-month period of project construction; (2) the temporary harassment, capture and collection of steelhead during water diversion and fish relocation, and temporary obstruction of upstream migration through the action area; (3) the temporary harassment of steelhead during pile installation; (4) the grading of the stream bed; and (5) alteration and temporary (1 to 2 year) reduction in riparian habitat. NMFS expects the effects to steelhead from disrupting migration and the loss and alteration of aquatic habitat during water diversion will be temporary and discountable because (1) migration through the action area by steelhead will be unimpaired after the water diversion is removed and the project is complete; (2) continued use of aquatic habitat by steelhead in areas adjacent to the dewatered area of the creek will not be affected during the proposed action; and (3) steelhead will be able to use the aquatic habitat throughout the action area after the proposed action is complete. NMFS anticipates that noise owing to pile driving within 26-feet from the source will be below the levels known to cause harm or mortality to fish, and, therefore, the pile driving is not expected to adversely affect steelhead. With regard to aquatic habitat, the impacts to the riparian zone are expected to be temporary, and the HMMP is expected to create a healthy functioning riparian zone that provides cover and shelter for steelhead within the action area of Tar Spring Creek. The impacts from disturbing the streambed are not expected to adversely affect the quality or quantity of aquatic habitat, or habitat-forming geomorphic processes downstream of the action area; rather the proposed action is expected to improve steelhead passage conditions and provide access to spawning and rearing habitat upstream of the action area. Maintained rearing habitat and improved fish passage conditions within the action area of Tar Spring Creek are expected to favor the viability of the threatened SCCC DPS of steelhead and not reduce the value of aquatic habitat for the species.

VI. CUMULATIVE EFFECTS

Cumulative effects include the effects of future State, local or private actions that are reasonably certain to occur in the action area considered in this Biological Opinion. NMFS is generally familiar with activities occurring in the action area, and at this time is unaware of such actions that would be reasonably certain to occur. Future federal actions that are unrelated to the proposed action are not considered in this section because they require separate consultation pursuant to Section 7 of the ESA. Consequently, NMFS believes no cumulative effect, beyond the continuing effects of present land use activities, is likely.

VII. CONCLUSION

After reviewing the best scientific and commercial information available, the status of the threatened SCCC DPS of steelhead, the environmental baseline for the action area, expected effects of the proposed action, and cumulative effects, NMFS concludes the proposed action is not likely to jeopardize the continued existence of the federally threatened SCCC DPS of steelhead.

VIII. INCIDENTAL TAKE STATEMENT

Take is defined as to harass, harm, pursue, hunt, shoot, wound, kill, trap, capture, collect, or to attempt to engage in any such conduct. Harm is further defined by NMFS to include significant habitat modification or degradation which actually kills or injures fish or wildlife by significantly impairing essential behavioral patterns, including breeding, spawning, rearing, migrating, feeding, or sheltering. Incidental take is defined as take of listed animal species that results from, but is not the purpose of, carrying out an otherwise lawful activity. Under the terms of section 7(b)(4) and section 7(o)(2), taking that is incidental to and not the purpose of the agency action is not considered a prohibited taking provided that such taking is in compliance with the terms and conditions of this incidental take statement.

The measures described below are non-discretionary and must be undertaken by Caltrans for the exemption in section 7(o)(2) to apply. Caltrans has a continuing duty to regulate the activity covered by this incidental take statement. If Caltrans (1) fails to assume and implement the terms and conditions or (2) fails to adhere to the terms and conditions of this incidental take statement through enforceable terms that are added to the permit or grant document, the protective coverage of section 7(o)(2) may lapse. In order to monitor the impact of incidental take, Caltrans must report the progress of the action and its impact on the species to NMFS as specified in the incidental take statement (50 CFR §402.14(i)(3)).

A. Amount or Extent of Take

NMFS anticipates the proposed action that will occur in Tar Spring Creek, San Luis Obispo County, California, may result in the incidental take of steelhead. Incidental take would be in the form of harassment or harm due to the water diversion, and steelhead capture or collection due to relocation procedures, if such procedures become necessary. Based on field surveys of the action area, and the depth, size, and amount of cover in the aquatic habitat immediately within the action area, NMFS anticipates the following amount of incidental take: All steelhead in the action area, anticipated to be no more than 20 juveniles that are captured or harassed during project activities. No more than 5 juvenile steelhead are expected to be injured or killed as a result of dewatering the action area and relocating the species. No other incidental take is anticipated as a result of the proposed action. The accompanying Biological Opinion does not anticipate any form of take that is not incidental to the proposed action.

B. Effect of Take

In the Biological Opinion, NMFS concludes that the anticipated level of take associated with the proposed action is not likely to result in jeopardy to the threatened SCCC DPS of steelhead.

C. Reasonable and Prudent Measures

NMFS believes that the following reasonable and prudent measures are necessary and appropriate to minimize and monitor incidental take of steelhead:

1. Avoid and minimize harm and mortality to steelhead from fish relocation and pile driving activities.

2. Avoid and minimize the impacts to steelhead and aquatic habitat from construction activities.

3. Minimize the amount and extent of sediment-related effects on the quality and quantity of instream habitat within the action area.

4. Minimize the amount and extent of temporary and permanent changes in the quality and quantity of instream and riparian habitat within the action area.

D. Terms and Conditions

In order to be exempt from any prohibitions of Section 9 of the ESA, Caltrans must ensure that it complies with the following terms and conditions, which implement the reasonable and prudent measures described above. These terms and conditions are non-discretionary:

1. The following terms and conditions implement reasonable and prudent measure No. 1.

   A. Caltrans shall retain a biologist with expertise in the areas of resident or anadromous salmonid biology and ecology; fish/habitat relationships; biological monitoring; and, handling, collecting, and relocating salmonid species.

   B. Caltrans' biological monitor shall oversee the construction site during implementation and removal of the water diversion for removing any steelhead. The biologist shall identify suitable habitat downstream of the dewatered area prior to installation of the diversion. The biologist shall capture steelhead in the isolated wetted work area and then relocate them to suitable habitat downstream. One or more of the following methods shall be used to capture steelhead: seine, dip net, throw net, minnow trap, or by hand. Electrofishing is prohibited.

   C. Caltrans' biological monitor shall provide a written fish relocation report to NMFS within 30 working days following completion of the proposed action. The report shall include 1) the number and size of any and all steelhead relocated during the proposed action or fish relocation; 2) the date and time of the collection and relocation site; 3) a description of any problem encountered during the project or when implementing terms and conditions; and, 4) any effect of the proposed action on steelhead that was not previously considered. The report should be sent to Jay Ogawa, NMFS, 501 W. Ocean Blvd., Suite 4200, Long Beach, California 90802-4213.

   D. Caltrans' biologist shall contact NMFS (Jay Ogawa, 562-980-4061) immediately if one or more steelhead are found dead or injured. The purpose of the contact shall be to review the activities resulting in take and to determine if additional protective measures are required. All steelhead mortalities shall be retained, frozen as soon as practical, and placed in an appropriate-sized sealable bag that is labeled with the date and location of the collection and fork length and weight of the specimen(s). Frozen samples shall be

retained by the biologist until additional instructions are provided by NMFS. Subsequent notification must also be made in writing to Jay Ogawa, NMFS, 501 W. Ocean Blvd., Suite 4200, Long Beach, California 90802-4213 within five days of noting dead or injured steelhead. The written notification shall include 1) the date, time, and location of the carcass or injured specimen; 2) a color photograph; 3) cause of injury or death; and, 4) name and affiliation of the person whom found the specimen.

E. Caltrans' biological monitor shall monitor sound levels during pile driving activities to ensure that levels at the streams edge and underwater are not higher than the anticipated peak SPL and cumulative SEL described in the biological assessment. Pile driving shall be monitored at a minimum of 3 locations, approximately 26-feet away from the pile being driven and immediately upstream and downstream of the dewatered work area. If sound levels at the streams edge or underwater are higher than those proposed, the biologist shall be empowered to halt work and will contact NMFS (Jay Ogawa, 562-980-4061) immediately and prior to continuing pile driving activities. The purpose of the contact is to identify possible pile-driving modifications that would be implemented to reduce noise to levels that are not harmful to steelhead.

2. The following terms and conditions implement reasonable and prudent measure No. 2.

A. To increase the likelihood that the proposed fish passage and habitat conditions would be adequately reflected in the completed proposed action, Caltrans shall provide the final grading plan to NMFS for review and comment within 30 calendar days prior to the beginning of construction. Caltrans shall use NMFS' comments to revise the grading plan, and then resubmit the plan to NMFS within 14 calendar days of receiving NMFS comments. Caltrans must receive final NMFS agreement for the design and grading plan prior to implementation of the proposed action. The final and subsequent iterative versions of the grading plan shall be sent to Jay Ogawa, NMFS, 501 W. Ocean Blvd., Suite 4200, Long Beach, California 90802-4213.

B. Caltrans' biological monitor shall monitor all construction activities, instream habitat, and performance of sediment control devices for the purpose of identifying and reconciling any condition that could adversely affect steelhead or their habitat. The biologist shall be empowered to halt work activity and to recommend measures for avoiding adverse effects to steelhead and their habitat. The biological monitor shall immediately contact NMFS (Jay Ogawa, 562-980-4061) upon making a determination that unforeseen effects have occurred, which could have an adverse effect on steelhead or aquatic habitat not previously considered.

C. Heavy equipment shall be positioned away from the creek channel at the end of each workday. When feasible the use of heavy equipment shall be performed from upland areas or the roadway. All heavy equipment shall be checked for leaks of oil, gas, hydraulic fluid and any other pollutant which could impact water quality and instream habitat each workday prior to being deployed into the creek. Such leaks shall be controlled for the purpose of avoiding water-quality impacts to surface water.

D. All materials and debris related to bridge demolition and construction shall be removed from the creek channel bed and riparian zone as soon as possible and in no instance later than November 1.

3. The following terms and conditions implements reasonable and prudent measure No. 3.

A. Erosion control or sediment detention devices (*e.g.*, temporary settling basin) shall be installed prior to the time of construction activities and incorporated into Caltrans maintenance activities. These devices shall be in place during construction activities for the purpose of minimizing sediment and sediment-water slurry input to flowing water. Sediment collected in the devices shall be disposed off-site and not allowed to reenter the creek channel.

4. The following terms and conditions implements reasonable and prudent measure No. 4.

A. Caltrans shall obtain a topographical survey of the channel thalweg within 30 calendar days following completion of the proposed action. Caltrans shall conduct a topographic survey once a year for the 5 years following completion of the proposed action. The topographic survey shall be performed concurrently to the proposed vegetation monitoring that is scheduled after a large storm event. All survey results should be submitted as soon as they become available to Jay Ogawa, NMFS, 501 W. Ocean Blvd., Suite 4200, Long Beach, California 90802-4213. The survey shall start 400-feet downstream of the bridge and end 300-feet upstream of the Branch Mill Road Bridge. The survey shall possess sufficient detail to capture channel geometry and slope for the purpose of ensuring the proposed action does not reduce fish-passage conditions or degrade existing aquatic habitat. Items to be monitored include:

i. The formation of a low-flow fish passage channel throughout the action area.
ii. The amount and extent of erosion and deposition within or immediately upstream or downstream of the action area.
iii. The formation of a head-cut as a result of eliminating the concrete weir structure.
iv. The condition of the surveyed reach over time through the establishment of photo-reference sites.

B. Caltrans or their authorized biologist shall provide a revegetation report that is to include a description of the locations seeded or planted, the area revegetated, proposed methods to monitor and maintain the revegetated area, criteria used to determine the success of the plantings, and pre- and post-planting color photographs of the revegetated area. The revegetation report shall be sent to Jay Ogawa, NMFS, 501 W. Ocean Blvd., Suite 4200, Long Beach, California 90802-4213, within 30 calendar days following completion of the proposed action.

C. Caltrans or their authorized biologist shall provide the results of the vegetation monitoring within 30 calendar days following completion of the annual site inspections for the 5 years following completion of the project as described in the HMMP. The

report shall include color photographs taken of the project area during each inspection and before and after implementation of the proposed action. The vegetation monitoring results shall be sent to Jay Ogawa, NMFS, 501 W. Ocean Blvd., Suite 4200, Long Beach, California 90802-4213, within 30 calendar days following completion of the site inspection.

X. REINITIATION OF CONSULTATION

This concludes formal consultation on the actions outlined in the project proposal. As provided in 50 CFR §402.16, reinitiation of formal consultation is required where discretionary federal agency involvement or control over the action has been retained (or is authorized by law) and if: (1) the amount or extent of incidental take is exceeded, (2) new information reveals effects of the action that may affect listed species in a manner or to an extent not previously considered in this opinion, (3) the action is subsequently modified in a manner that causes an effect to the listed species not considered in this opinion, or (4) a new species is listed or critical habitat designated that may be affected by the action. In instances where the amount or extent of incidental take is exceeded, formal consultation shall be reinitiated immediately.

XI. LITERATURE CITED

Barnhart, R. B. 1991. Steelhead (*Oncorhynchus mykiss*). Pages 324 to 336 *in* J. Stolz and J. Schnell (eds.) Trout. Stackpole Books, Harrisburg, PA.

Bell, J. L., L. C. Sloan, and M. A. Snyder. 2004. Regional changes in extreme climate events: A future climate scenario. Journal of Climate 17:81-87.

Berg, L., and T. G. Northcote. 1985. Changes in territorial, gill-flaring, and feeding behavior in juvenile coho salmon (*Oncorhynchus kisutch*) following short-term pulses of suspended sediment. Canadian Journal of Fisheries and Aquatic Sciences 42: 1410–1417.

Berger, J. 1990. Persistence of different-sized populations: an empirical assessment of rapid extinctions in bighorn sheep. Conservation Biology 4: 91-98.

Bilby, R. E. and P. A. Bisson. 1998. Function and distribution of large woody debris. 324–346. in Naiman RJ, Bilby RE, eds. River Ecology and Management: Lessons From the Pacific Coastal Ecoregion New York: Springer-Verlag.

Bjornn, T. C., M. A. Brusven, M. P. Molnau, J. H. Milligan, R. A. Klamt, E. Chacho, and C. Schaye. 1977. Transport of granitic sediment in streams and its effect on insects and fish. University of Idaho, Forest, Wildlife, and Range Experiment Station, Bulletin 17, Moscow.

Boughton, D. A., H. Fish, K. Pipal, J. Goin, F. Watson, J. Casagrande, J. Casagrande, and M. Stoecker. 2005. Contraction of the southern range limit for anadromous *Oncorhynchus mykiss*. NOAA Technical Memorandum NOAA-TM-NMFS-SWFSC-380.

Boughton, D. A., P. B. Adams, E. Anderson, C. Fusaro, E. Keller, E. Kelley, L. Lentsch, J. Nielsen, K. Perry, H. Regan, J. Smith, C. Swift, L. Thompson, and F. Watson. 2006. Steelhead of the south-central/southern California coast: population characterization for recovery planning. NOAA Technical Memorandum, NOAA-TM-NMFS-SWFSC-394.

Busby, P. J., T. C. Wainwright, G. J. Bryant, L. J. Lierheimer, R. S. Waples, F. W. Waknitz, and I. V. Lagomarsino. 1996. Status review of west coast steelhead from Washington, Idaho, Oregon, and California. U. S. Department of Commerce, NOAA Technical Memorandum. NMFS-NWFSC-27, 261 pp.

California Department of Water Resources, Southern District (DWR). 2002. Water Resources of the Arroyo Grande-Nipomo Mesa area.

Campbell, R. N. B., and D. Scott. 1984. The determination of minimum discharge for 0+ brown trout (*Salmo trutta L.*) using a velocity response. New Zealand Journal of Marine and Freshwater Research. 18: 1-11.

Cayan, D. R., S. Kammerdiener, M. D. Dettinger, J. M. Caprio, and D. H. Peterson. 2001. Changes in the onset of spring in the western United States. Bulletin of the American Meteorological Society. 82(3): 399-415.

Chapman, D. W. 1988. Critical review of variables used to define effects of fines in redds of large salmonids. Transactions of the American Fisheries Society 117: 1-21.

Clothier, W. D. 1953. Fish loss and movement in irrigation diversions from the west Gallatin River, Montana. Journal of Wildlife Management 17: 144-158.

Clothier, W. D. 1954. Effect of water reductions on fish movement in irrigation diversions. Journal of Wildlife Management 18: 150-160

Cordone, A. J., and D. W. Kelley. 1961. The influences of inorganic sediment on the aquatic life of streams. California Fish and Game 47: 189–228.

Crouse, M.R., C.A. Callahan, K.W. Malueg, and S.E. Dominguez. 1981. Effects of fine sediments on growth of juvenile coho salmon in laboratory streams. Transactions of the American Fisheries Society 110: 281-286.

Cushman, R. M. 1985. Review of ecological effects of rapidly varying flows downstream from hydroelectric facilities. North American Journal of Fisheries Management 5: 330-339.

Fukushima, L. and E.W. Lesh. 1998. Adult and juvenile anadromous salmonid migration timing in California streams. California Fish and Game 84: 133-145.

Good, T. P., R. S. Waples, and P. Adams (editors). 2005. Updated status of federally listed ESUs of West Coast salmon and steelhead. U.S. Dept. Commerce, NOAA Tech. Memo. NMFS-NWFSC-66, 598 p.

Gregory, R. S., and T.G. Northcote. 1993. Surface, planktonic, and benthic foraging by juvenile Chinook salmon (*Oncorhynchus tshawytcha*) in turbid laboratory conditions. Canadian Journal of Fisheries and Aquatic Sciences 50: 233-240.

Harvey, B. C. 1986. Effects of suction gold dredging on fish and invertebrates in two California streams. North American Journal of Fisheries Management 6: 401–409.

Hastings, M. C., and A. N. Popper. 2005. Effects of Sound on Fish. Prepared for the California Department of Transportation. January 28, 2005.

Karl, T. R., J. M. Melillo, and T. C. Peterson (eds.). 2009. *Global Climate Change Impacts in the United States.* Cambridge University Press.

Karr, J. R., and I. J. Schlosser. 1978. Water resources and the land-water interface. Science 2001:229-234.

Keeley, E. R. 2003. An experimental analysis of self-thinning in juvenile steelhead trout. Oikos 102:543-550.

Kraft, M. E. 1972. Effects of controlled flow reduction on a trout stream. Journal of the Fisheries Research Board of Canada 29(10): 1405-1411.

Lowrance, R., R. Leonard, and J. Sheridan. 1985. Managing riparian ecosystems to control nonpoint pollution. Journal of Soil and Water Conservation 40:87-91.

Matthews, K. R., and N. H. Berg. 1997. Rainbow trout responses to water temperature and dissolved oxygen stress in two Southern California stream pools. Journal of Fish Biology 50: 50-67.

McCarty, J. P. 2001. Ecological consequences of recent climate change. Conservation Biology. 15(2): 320-331.

McElhaney, P., M. H. Ruckelshaus, M. J. Ford, T. C. Wainwright, and E. P. Bjorkstedt. 2000. Viable salmonid populations and the recovery of evolutionarily significant units. NOAA Technical Memorandum, NMFS-NWFSC-42.

McLeavy, D. J., I. K. Birtwell, G. F. Hartman, G. L. Ennis. 1987. Response of arctic grayling (*Thymallus arcticus*) to acute and prolonged exposure to Yukon placer mining sediment. Canadian Journal of Fisheries and Aquatic Sciences 44:658-673.

Meehan, W. R., and T. C. Bjornn. 1991. Salmonid distribution and life histories. Pages 47-82 *in* W. R. Meehan (ed.) Influences of Forest and Rangeland Management on Salmonid Fishes and their Habitats. American Fisheries Society Special Publication 19.

Mitchell, S. 1999. A simple model for estimating mean monthly stream temperatures after riparian canopy removal. Environmental Management 24: 77-83.

Naiman, R. J., R. E. Bilby, and P. Bisson. 2000. Riparian ecology and management in the Pacific coastal rain forest. BioScience 50:996–1011.

National Marine Fisheries Service (NMFS). 1997. Endangered and threatened species: listing of several evolutionary significant units (ESUs) of West Coast steelhead. Federal Register [Docket 960730210-7193-02, 18 August 1997] 62(159): 43937-43953.

National Marine Fisheries Service (NMFS). 2005. Endangered and threatened species: designated critical habitat for seven evolutionary significant units of Pacific salmon and steelhead in California. Federal Register 70 (170): 52488-52586.

National Marine Fisheries Service (NMFS). 2006. Endangered and threatened species: final listing determinations for 10 distinct population segments of west coast steelhead. Federal Register 71(3): 834-862.

National Marine Fisheries Service (NMFS). 2011. South-Central/Southern California Coast Steelhead Recovery Planning Domain 5-Year Review: Summary and Evaluation of *Southern California Coast Steelhead Distinct Population Segment*. Southwest Region, Long Beach, California.

Nielsen, J. L., T. E. Lisle, and V. Ozaki. 1994. Thermally stratified pools and their use by steelhead in northern California streams. Transactions of the American Fisheries Society 123: 613-626.

Opperman, J. and A. M. Merenlender. 2004. The effectiveness of riparian restoration for improving instream fish habitat in four hardwood-dominated California streams. North American Journal of Fisheries Management 24(3):822-834.

Pimm, S. L., H. L. Jones, and J. Diamond. 1988. One the risk of extinction. American Naturalist 132: 757-785.

Platts, W. S. 1991. Livestock grazing. Pages 389-423 in W. R. Meehan (ed.) Influences of Forest and Rangeland Management on Salmonid Fishes and their Habitats. American Fisheries Society Special Publication 19.

PRBO Conservation Science. 2011. *Projected Effects of Climate Change in California Ecoregional Summaries Emphasizing Consequences for Wildlife.* PRBO Conservation Science, Petaluma, California.

Primack, R. 2004. A primer of conservation biology, 3rd edition. Sinauer Associates, Inc., Sunderland, MA.

Roper, B. B., D. L. Scarnecchia, and T. J. La Marr. 1994. Summer distribution of and habitat use by chinook salmon and steelhead within a major basin of the South Umpqua River, Oregon. Transactions of the American Fisheries Society 123: 298-308.

Servizi, J. A., and D. W. Martens. 1992. Sublethal responses of coho salmon (*Oncorhynchus kisutch*) to suspended sediments. Canadian Journal of Fisheries and Aquatic Sciences 49:1389-1395.

Shapovalov, L., and A. C. Taft. 1954. The life histories of the steelhead rainbow trout (*Salmo gairdneri gairdneri*) and silver salmon (*Oncorhynchus kisutch*) with special reference to Waddell Creek, California, and recommendations regarding their management. State of California, Department of Fish and Game, Fish Bulletin 98.

Sigler, J. W., T. C. Bjornn, and F. H. Everest. 1984. Effects of chronic turbidity on density and growth of steelhead and coho salmon. Transactions of the American Fisheries Society 113: 142-150.

Snyder, M. A., and L. C. Sloan. 2005. Transient future climate over the western United States using a regional climate model. Earth Interactions 9: Article No. 11.

Spence, B.C., G.A. Lomnicky, R.M. Hughes and R. P. Novitzki. 1996. An Ecosystem Approach to Salmonid Conservation. Funded jointly by the U.S. EPA, U.S. Fish and Wildlife Service

and National Marine Fisheries Service. TR-4501-96-6057. Man Tech Environmental Research Services Corp., Corvallis, OR.

Swanson Hydrology and Geomorphology. 2006. Arroyo Grande Creek: Steelhead Distribution and Abundance Survey. Prepared for Centrak Coast Salmon Enhancement in association with Hagar Environmental Science. December 21.

Thomas, V. G. 1985. Experimentally determined impacts of a small, suction gold dredge on a Montana stream. North American Journal of Fisheries Management 5: 480-488.

Velagic, E. 1995. Turbidity study: a literature review. Prepared for Delta planning branch, California Department of Water Resources for Water and Wildland Resources, University of California, Davis.

Wang, L., J. Lyons, P. Kanehl, and R. Gatti. 1997. Influences of watershed land use on habitat quality and biotic integrity in Wisconsin streams. Fisheries. 22:6-12

Waters, T. F. 1995. Sediment in Streams: Sources, Biological Effects, and Control. American Fisheries Society Monograph 7.

Welsch, D. J. 1991. Riparian Forest Buffers; Function and design for protection and enhancement of water resources. USDA publication NA-PR-07-91

Wesche, T.A., C.M. Goertler, and C.B. Frye. 1987. Contribution of riparian vegetation to trout cover in small streams. North American Journal of Fisheries Management 7: 151-153.

Williams, T. H., S. T. Lindley, B. C. Spence, and D. Boughton. 2011. *Status Review Update for Pacific Salmon and Steelhead Listed Under the Endangered Species Act: Southwest Region.* National Marine Fisheries Service, Southwest Fisheries Science Center, Fisheries Ecology Division.

Enclosure 1

Appendix A

Tar Springs Bridge Replacement Conceptual Level Project Review

NOAA Memorandum

Date: November 12, 2013
To: Jay Ogawa
From: David Crowder, Ph.D.
Subject: Tar Springs Bridge Replacement Conceptual Level Project Review

---

PURPOSE: At the request of Jay Ogawa (PRD biologist), a review was conducted of the conceptual level design plans provided by the San Luis Obispo County Department of Public Works (SLOCDOPW, 2013a; SLOCDOPW, 2013b; Wreco 2013). The scope of this review was limited to evaluating if the proposed plan will provide juvenile and adult steelhead passage conditions in accordance with NMFS (2001) fish passage guidelines. Structural integrity, geotechnical stability, public safety, flood hazard, and all other aspects of the project's design should be reviewed/assessed by qualified and (if/when needed) licensed personnel and are the responsibility of the San Luis Obispo County Department of Public Works' (SLOCDOPW) principal design engineer and/or SLOCDOPW to ensure that the proposed project design meets all regulatory and permitting requirements. The comments provided below are based upon conceptual level drawings/descriptions and does not represent a complete bioengineering review, which would require additional information (e.g. the 100% draft design drawings).

BACKGROUND: SLOCDOPW is proposing to replace the bridge crossing over Tar Springs Creek on Branch Mill Road in San Luis Obispo County (Approximate Latitude 35°7'54.92"N; Longitude 120°32'33.92"). Tar Springs Creek is a deeply incised tributary to Arroyo Grande Creek. Channel incision is threatening to undermine the existing bridge (Figures 1 and 2). Below the bridge is an approximately 2-foot high concrete weir. The weir-notch has been damaged/undercut such that very low flows pass underneath the weir (Figures 3 and 4).

FISH PASSAGE PROBLEM STATEMENT: During low flows juvenile and adults steelhead may have difficulty passing over the weir as flows go subsurface at the undercut weir notch. However, it is unclear to what extent juvenile and adult steelhead passage is impeded during fish passage flows due to a lack of hydraulic information regarding the structure. Tar Springs Creek is also a deeply incised channel and it is unclear whether the channel is still undergoing significant geomorphic changes (e.g. down cutting and/or channel widening).

PROPOSED FISH PASSAGE SOLUTION: The project proposes to replace the existing bridge with a longer bridge spanning the entire active channel bottom, remove the existing concrete weir, place RSP on the banks of the stream and grade the channel bed with natural material at an approximate slope of 1.1% slope for approximately 70-feet of stream reach (Wreco, 2013). SLOCDOPW 2013b (pg 4-5) also states that the channel cross-section width underneath the bridge will also be increased, which combined with the elimination of the bridge

piers will make the channel cross-section more consistent with locations upstream and downstream of the bridge.

OVERALL COMMENTS:

1. The project proponent is essentially pursuing a stream simulation design with the expectation of letting the stream naturally adjust its slope over time. While the average slopes upstream and downstream of the project, along with representative channel widths at the 2-year flow event, are quantified, the project proponent does not provide detailed documentation describing the geomorphic conditions of the stream. A complete set of the 100% draft design drawings has not been provided either. Consequently, detailed comments cannot be provided on how well the proposed project will simulate adjacent stream and fish passage conditions immediately after construction.
2. The proposed project reach slope (1.1%) matches the slope immediately upstream of the project reach, but is greater than the 0.6% average channel slope occurring immediately downstream of the project reach (Table 2 of Wreco, 2013). However, there are sections of the downstream channel bed with slopes of about 1% (e.g. from position 0 to position 190 shown on Figure 2 (Wreco, 2013)). Thus, it remains unclear whether or not systemic head cutting could be an issue at this location after removing the concrete weir. The project proponent should be prepared to address any negative impacts related to fish passage (or otherwise) that head cutting could have.
3. Assuming the channel adjusts over time to have a slope and active channel width consistent with those found in adjacent stream reaches, the proposed plan should in the long-term provide desirable fish passage conditions as it eliminates the concrete weir (a potential fish passage barrier) and adopts a natural channel bed.
4. Wreco (2013) concludes "Based on our analysis, matching the slope of the existing creek upstream of the project site would allow the channel to remain stable without any substantial aggradation or degradation". A monitoring plan should be put in place to document how the channel changes over time and to make certain that the channel responds as expected and that any unexpected fish passage issues can be addressed via adaptive management.

FISH PASSAGE COMMENTS AND QUESTIONS:

1. The active channel width (excluding where RSP will be placed) within the project reach should match that of the upstream and downstream channel reaches (outside the influence of the existing bridge structure). 100% draft design drawings clearly showing that the RSP will be outside the active channel should be provided. SLOCDOPW (2013b, page 2) suggests the active width is between 13' to 23' wide. However, Table 4 (Wreco, 2013) suggests the existing active channel widths are on the order of 24 to 30 feet away from Branch Mill Road. The wider 24 – 30 foot active channel widths estimated from hydraulic computations are more conservative and should be used as guidance.

2. The proposed conditions reduce the channel active width at cross-sections "20 feet upstream of Branch Mill Road" and "just downstream of Branch Mill Road (Wreco, 2013). The active channel widths at these cross-sections should not be reduced if possible.
3. The project proponent may consider placing some slightly larger material (size to be determined) in the steeper 1.1% slope area to increase channel roughness, which will improve initial stability and provide deeper and slower flows until the channel experiences large enough flow events to adjust the channel reach to a milder slope. Specifically, strategically placed roughness in the form of small boulders may help provide steelhead with small resting pockets. Efforts to reproduce any natural in stream features, incorporating flow heterogeneity, and incorporating a low flow channel in the graded reach will also help achieve fish passage goals.
4. Any streambed material placed in the channel should be well graded and sealed/placed in a fashion that does not allow piping and/or flows to go subsurface.

ADDITIONAL COMMENTS

Following are comments and recommendations regarding the proposed project's design. Where comments are noted below, they are advisory in nature and are provided for the attention of the design engineers, construction managers, contractors, and project operators.

None

REFERENCES:

CDFG, 2002. Culvert Criteria for Fish Passage. California Department of Fish and Game. May 2002.

CDFG, 2009. California Salmonid Stream Habitat Restoration Manual: Part XII: Fish Passage Design and Implementation. California Department of Fish and Game. April, 2009.

NMFS, 2001. Guidelines for Salmonid Passage at Stream Crossings. National Marine Fisheries Service-Southwest Region. September 2001. (http://swr. nmfs. noaa.gov/hcd/NMFSSCG. PDF)

NMFS, 2011. Anadromous Salmonid Passage Facility Design. National Marine Fisheries Service-Northwest Region. July 2011.

NMFS, 2012. Southern California Steelhead Recovery Plan. January 2012.

SLOCDOPW, 2013a. Response to NMFS letter to Caltrans dated May 22, 2013, Branch Mill Road at Tar Sprig Creek Bridge Replacement, BRLO-5949(116). San Luis Obispo County Department of Public Works, Memo, June 10, 2013.

SLOCDOPW, 2013b. Response to NMFS letter to Caltrans dated July 16, 2013, Branch Mill Road at Tar Sprig Creek Bridge Replacement, BRLO-5949(116). San Luis Obispo County Department of Public Works, Memo, June 10, 2013.

Wreco, 2013. Tar Springs Creek Stream Stability near Branch Mill Road. Memo, September 26, 2013.

Figure 1. Bridge pier (right bank) that could potentially be undercut.

Figure 2. Bridge piers and footing (left bank) that could potentially be undercut

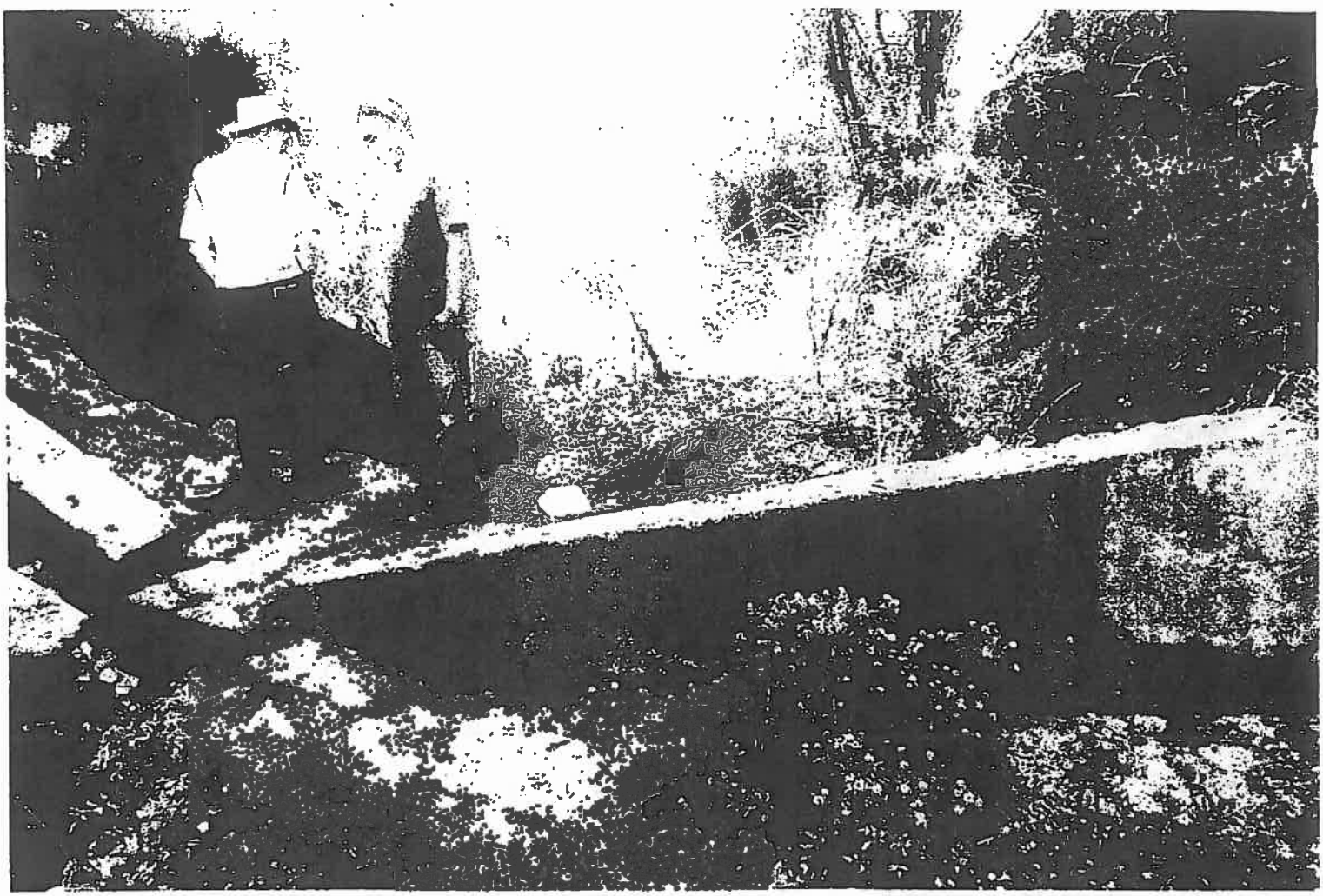

Figure 3. Concrete weir downstream of the bridge.

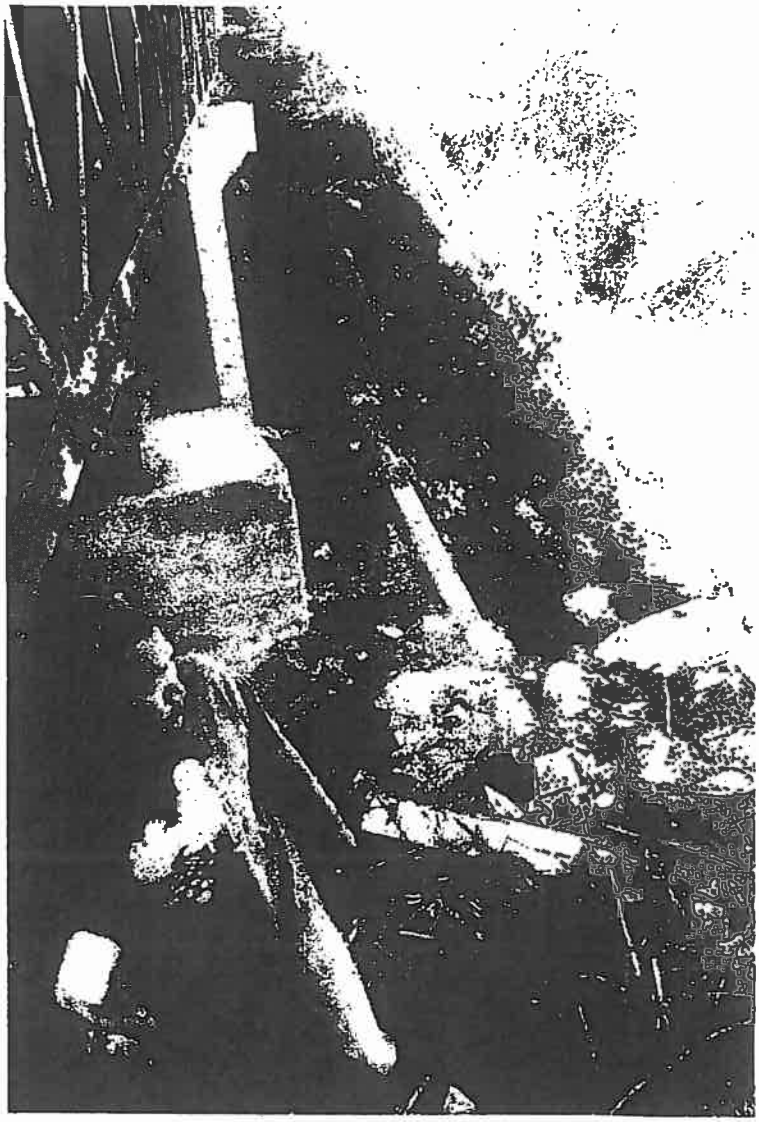

Figure 4. Concrete weir downstream of the bridge.

United States Department of the Interior

FISH AND WILDLIFE SERVICE
Ventura Fish and Wildlife Office
2493 Portola Road, Suite B
Ventura, California 93003

IN REPLY REFER TO:
81440-2010-F-0382

May 4, 2011

Rich Krumholz, District Director
California Department of Transportation
50 Higuera Street
San Luis Obispo, California 93401-5415

Subject: Programmatic Biological Opinion for Projects Funded or Approved under the Federal Highway Administration's Federal Aid Program (8-8-10-F-58)

Dear Mr. Krumholz:

This document transmits the U.S. Fish and Wildlife Service's (Service) biological opinion regarding projects funded under the Federal Highway Administration's (FHWA) Federal Aid Program that are likely to adversely affect the federally threatened California red-legged frog (*Rana draytonii*) and its designated critical habitat. This document also contains our programmatic concurrence for projects conducted under the Federal Aid Program that are not likely to adversely affect the California red-legged frog or its critical habitat. The development of this programmatic biological opinion and concurrence are the result of a collaborative effort between the California Department of Transportation (Caltrans) and the Service.

Pursuant to the Safe, Accountable, Flexible, Efficient Transportation Equity Act: A Legacy for Users (SAFETEA-LU), the FHWA assigned and Caltrans assumed responsibilities for consultation and coordination with resource agencies for most projects within the state of California (FHWA 2007). The delegation of authority stipulates that correspondence regarding consultations be addressed to Caltrans, even if the FHWA initiated the consultation. Consequently, we have developed this biological opinion in accordance with this direction.

This biological opinion, which has been prepared in accordance with section 7(a)(2) of the Endangered Species Act of 1973, as amended (16 U.S.C. 1531 *et seq.*) (Act), evaluates the effects of certain activities, authorized by Caltrans, on the California red-legged frog and its critical habitat, within the Ventura Fish and Wildlife Office's area of responsibility in San Benito, Santa Cruz, Monterey, San Luis Obispo, and Santa Barbara, Counties, California. We believe that California red-legged frog populations in Ventura and Los Angeles Counties are so isolated from other California red-legged frog populations, that they do not meet the eligibility criteria described in the Description of the Proposed Action section of this biological opinion (Criterion 4.).

TAKE PRIDE IN AMERICA

This biological opinion and programmatic concurrence were prepared primarily with information provided by the California Department of Transportation and information in our files. A complete record of this consultation can be made available upon on request.

CONSULTATION HISTORY

Since the listing of the California red-legged frog in 1996, the FHWA, in conjunction with Caltrans, consulted with the Service's Ventura Fish and Wildlife Office on numerous projects that the FHWA determined were likely to adversely affect the California red-legged frog. The FHWA, Caltrans, and the Service recognized that many of these projects resulted in minor effects to the California red-legged frog and its habitat. Additionally, many of the protective measures included in our previous biological opinions were very similar. Consequently, the Service, FHWA, and Caltrans determined that a programmatic approach to the consultation process was appropriate. Staff from the Service's Ventura Fish and Wildlife Office, FHWA, and Caltrans coordinated extensively during the preparation of a programmatic biological opinion we issued to FHWA in 2003 (Service 2003).

The Service designated critical habitat for the California red-legged frog, on March 17, 2010, (75 Federal Register (FR) 12816). The 2003 programmatic biological opinion does not address critical habitat for the California red-legged frog, so any biological opinion tiered from the 2003 programmatic and issued after critical habitat was designated must include a complete analysis of the effects of the proposed action on critical habitat for the California red-legged frog. Therefore, to further streamline the consultation process achieved with the 2003 programmatic, a complete analysis of the effects of the proposed actions on critical habitat for the California red-legged frog is included in this biological opinion.

Since 2003, we have issued 26 biological opinions that are tiered off of our programmatic biological opinion (Service 2003). Construction on 16 of those projects is complete and we have included additional information on those projects in the Environmental Baseline section of this biological opinion. Caltrans and the Service consider this biological opinion a reinitiation of formal consultation on the 14 projects that have not been completed, or where the proposed action would adversely affect critical habitat for the California red-legged frog.

Although we have strived to issue biological opinions tiered from the 2003 programmatic in a much shorter timeframe than required by Federal regulation (50 CFR 402), at times the large number of formal consultations to be completed has limited our ability to provide these documents within expedited timeframes. Therefore, Caltrans and the Service recognize that we could further streamline the 2003 programmatic by avoiding tiered biological opinions, resulting in a more efficient process.

ADMINISTRATION OF THE PROGRAMMATIC BIOLOGICAL OPINION

Caltrans will prepare all required environmental documents for individual projects that would be conducted pursuant to this biological opinion, including those needed to satisfy its

responsibilities under the Act, the National Environmental Policy Act, and the California Environmental Quality Act.

For all proposed actions that Caltrans determine are likely to adversely affect the California red-legged frog or its critical habitat, Caltrans will consider whether the action:

1. Meets the suitability criteria, as described in the Description of the Proposed Action section of this biological opinion; and

2. Whether the proposed activities and anticipated effects to California red-legged frogs fall within the scope of this biological opinion.

At least 90 days prior to conducting any activities that it determines are likely to adversely affect the California red-legged frog or its critical habitat, Caltrans will notify the Ventura Fish and Wildlife Office, in writing, of projects they propose to conduct under the auspices of this biological opinion. If the Service determines that use of this programmatic biological opinion is not appropriate for the proposed action, we will notify Caltrans in writing within 30 days, and the standard provisions for section 7 consultation will apply. The regulations which implement section 7 allow the Service up to 90 days to conclude formal consultation and an additional 45 days to prepare our biological opinion. If we require additional information to complete our biological opinion, we will describe our needs in our letter; if additional information is not required, we will consider consultation to have been initiated on the date we received the original notification of Caltrans' intent to conduct their proposed project pursuant to the programmatic consultation.

At a minimum, the following information will accompany Caltrans' project notification to the Service:

1. A 7.5-minute topographic map (and aerial photographs if possible) of the proposed project site, as well as photographs of the project site;

2. A written description of the activity, including, but not limited to, construction methods, time of year the work would occur, a habitat restoration plan, and a construction monitoring plan;

3. One cross-section and a minimum of one plan view indicating water bodies, vegetation types, work areas, roads (including temporary construction access roads), restoration sites, refueling and staging areas that will be located within the existing or proposed public right-of-way or temporary construction easements, and environmentally sensitive areas proposed to protect habitat of the California red-legged frog;

4. The names and credentials of biologists who will conduct surveys for, monitor, and handle California red-legged frogs will be provided to the Service 30 days prior to the start of construction. Once the Service approves a biologist, Caltrans would not need to

provide their credentials for subsequent projects conducted pursuant to this consultation; and

5. Information resulting from any site visits, surveys, or habitat assessments conducted for the proposed action.

By January 31 of each year this consultation is in effect, Caltrans will provide to the Service's Ventura Fish and Wildlife Office, a list of projects for which it used this consultation. Caltrans will provide sufficient information on the list to identify the projects that occurred in the previous year under the provisions of this biological opinion. The annual list will assist the Ventura Fish and Wildlife Office in ensuring that it has received the required Project Completion Reports that are described later in this document. Caltrans may also use the occasion of providing the list to recommend changes to the consultation that are more protective of the California red-legged frog and its habitat while simplifying compliance with the Act.

ADMINISTRATION OF THE PROGRAMMATIC INFORMAL CONSULTATION

For all proposed actions that Caltrans determines may affect, but are not likely to adversely affect, the California red-legged frog or its critical habitat, Caltrans will determine if the proposed action meets the suitability criteria for our programmatic concurrence, as described in the Description of the Proposed Action section of this biological opinion. If Caltrans determines the proposed action meets the suitability criteria for concurrence, it will notify our office in writing, at least 30 days prior to the start of construction. We will review Caltrans' notification and respond in in writing, or via electronic mail, if we have concerns or questions regarding the proposed action, or if we have any additional information that we believe may influence Caltrans' determination.

At a minimum the following information will accompany the notification:

1. Caltrans must include a rationale in its notification to us, as to how adverse effects to the California red-legged frog and its critical habitat will be avoided.

2. A 7.5-minute topographic map and aerial photographs of the project site, as well as photographs of the project site. The location of the project, any restoration sites, and all known locations of California red-legged frogs within 2 miles of the project site will be identified on the map and photographs;

3. A written description of the activity, including, but not limited to, construction methods, avoidance measures in addition to those required under this programmatic biological opinion, time of year the work would occur, habitat restoration plans, and construction monitoring plans;

4. One cross-section and a minimum of one plan view indicating water bodies, vegetation types, work areas, roads (including temporary construction access roads), restoration

sites, refueling and staging areas that will be located within the existing or proposed public right-of-way or temporary construction easements, and Environmentally Sensitive Areas proposed to protect habitat of the California red-legged frog; and

5. The results of information gathered by following the procedures in the Service's guidance for assessing habitat quality and field surveys for the California red-legged frog.

Staff from the Service's Ventura Fish and Wildlife Office will be available to provide technical assistance during all phases of consultation. Technical assistance can include assisting Caltrans with determinations of effects, development of project-specific designs and protective measures, modifications of survey protocols, and any other issues that may arise. Technical assistance may be transmitted by the Service in the form of telephone calls, electronic mail, or written correspondence.

BIOLOGICAL OPINION

ANALYTICAL FRAMEWORK FOR THE JEOPARDY AND ADVERSE MODIFICATION DETERMINATIONS

Jeopardy Determination

The jeopardy analysis in this biological opinion relies on four components: (1) the *Status of the Species*, which evaluates the range-wide condition of the California red-legged frog, the factors responsible for that condition, and the species' survival and recovery needs; (2) the *Environmental Baseline*, which evaluates the condition of the California red-legged frog in the action area, the factors responsible for that condition, and the relationship of the action area to the survival and recovery of the California red-legged frog; (3) the *Effects of the Action*, which determines the direct and indirect impacts of the proposed Federal action and the effects of any interrelated or interdependent activities on the California red-legged frog; and (4) the *Cumulative Effects*, which evaluates the effects of future, non-Federal activities in the action area on the California red-legged frog.

In accordance with policy and regulation, the jeopardy determination is made by evaluating the effects of the proposed federal action in the context of the current status of the California red-legged frog, taking into account any cumulative effects, to determine if implementation of the proposed action is likely to cause an appreciable reduction in the likelihood of both the survival and recovery of the California red-legged frog.

The jeopardy analysis in this biological opinion places an emphasis on consideration of the range-wide survival and recovery needs of the California red-legged frog and the role of the action area in the survival and recovery of the subspecies as the context for evaluation of the significance of the effects of the proposed federal action, taken together with cumulative effects, for purposes of making the jeopardy determination.

Adverse Modification Determination

This biological opinion does not rely on the regulatory definition of "destruction or adverse modification" of critical habitat at 50 CFR 402.02. Instead, we have relied on the statutory provisions of the ESA to complete the following analysis with respect to critical habitat.

In accordance with policy and regulation, the adverse modification analysis in this biological opinion relies on four components: (1) the *Status of Critical Habitat*, which evaluates the range-wide condition of designated critical habitat for the California red-legged frog in terms of primary constituent elements (PCEs), the factors responsible for that condition, and the intended recovery function of the critical habitat overall; (2) the *Environmental Baseline*, which evaluates the condition of the critical habitat in the action area, the factors responsible for that condition, and the recovery role of the critical habitat in the action area; (3) the *Effects of the Action*, which determines the direct and indirect impacts of the proposed Federal action and the effects of any interrelated and interdependent activities on the PCEs and how that will influence the recovery role of the affected critical habitat units; and (4) *Cumulative Effects*, which evaluates the effects of future non-Federal activities in the action area on the PCEs and how that will influence the recovery role of affected critical habitat units.

For purposes of the adverse modification determination, the effects of the proposed federal action on the critical habitat of the California red-legged frog are evaluated in the context of the range-wide condition of the critical habitat, taking into account any cumulative effects, to determine if the critical habitat range-wide would remain functional (or would retain the current ability for the PCEs to be functionally established in areas of currently unsuitable but capable habitat) to serve its intended recovery role for the California red-legged frog.

The analysis in this biological opinion places an emphasis on using the intended range-wide recovery function of critical habitat for the California red-legged frog and the role of the action area relative to that intended function as the context for evaluating the significance of the effects of the proposed Federal action, taken together with cumulative effects, for purposes of making the adverse modification determination.

DESCRIPTION OF THE PROPOSED ACTION

Eligibility Criteria for the Programmatic Biological Opinion

To make use of this programmatic biological opinion, the Caltrans must ensure that a proposed project satisfies the following criteria:

Criterion 1: Actions that would be appropriately considered in this biological opinion are likely to result in adverse effects to the California red-legged frog and its critical habitat, but would not affect the long-term viability of the population in the action area Caltrans and the Service have previously consulted on numerous projects that met these criteria. These projects include: retrofitting of bridges to reduce damage that may be caused by earthquakes; repair, widening,

and replacement of bridges; repair of stream bank protection; replacement of low-flow stream crossings with bridges; small-scale stabilization of stream slopes; minor improvement of drainage; replacement of culverts; rehabilitation of highway surfaces; and improvement of the safety and operation of highways.

Criterion 2: To qualify for use of this programmatic biological opinion, the measures to reduce or avoid adverse effects to the California red-legged frog and its critical habitat, provided herein, must be implemented; these measures may be modified on a project-specific basis upon the agreement of the Caltrans and the Service.

Criterion 3: The projects must be single and complete, and not part of larger actions or associated with other development projects including, but not limited to, housing subdivisions, commercial or industrial developments, or golf courses.

Criterion 4: The projects must not, in the Service's view, take place in areas where populations of California red-legged frogs are so isolated that even the small effects described in this biological opinion may have substantial impacts.

Minimization of Adverse Effects

Caltrans will ensure that projects implemented in accordance with this biological opinion will be designed to avoid or minimize adverse effects to the California red-legged frog and its critical habitat. At a minimum, the following measures will be incorporated into the projects:

1. Only Service-approved biologists will participate in activities associated with the capture, handling, and monitoring of California red-legged frogs. Biologists authorized under this biological opinion do not need to re-submit their qualifications for subsequent projects conducted pursuant to this biological opinion, unless we have revoked their approval at any time during the life of this biological opinion.

2. Ground disturbance will not begin until written approval is received from the Service that the biologist is qualified to conduct the work, unless the individual(s) has/have been approved previously and the Service has not revoked that approval.

3. A Service-approved biologist will survey the project site no more than 48 hours before the onset of work activities. If any life stage of the California red-legged frog is found and these individuals are likely to be killed or injured by work activities, the approved biologist will be allowed sufficient time to move them from the site before work begins. The Service-approved biologist will relocate the California red-legged frogs the shortest distance possible to a location that contains suitable habitat and that will not be affected by activities associated with the proposed project. The relocation site should be in the same drainage to the extent practicable. Caltrans will coordinate with the Service on the relocation site prior to the capture of any California red-legged frogs.

4. Before any activities begin on a project, a Service-approved biologist will conduct a training session for all construction personnel. At a minimum, the training will include a description of the California red-legged frog and its habitat, the specific measures that are being implemented to conserve the California red-legged frog for the current project, and the boundaries within which the project may be accomplished. Brochures, books, and briefings may be used in the training session, provided that a qualified person is on hand to answer any questions.

5. A Service-approved biologist will be present at the work site until all California red-legged frogs have been relocated out of harm's way, workers have been instructed, and disturbance of habitat has been completed. After this time, the State or local sponsoring agency will designate a person to monitor on-site compliance with all minimization measures. The Service-approved biologist will ensure that this monitor receives the training outlined in measure 4 above and in the identification of California red-legged frogs. If the monitor or the Service-approved biologist recommends that work be stopped because California red-legged frogs would be affected in a manner not anticipated by Caltrans and the Service during review of the proposed action, they will notify the resident engineer (the engineer that is directly overseeing and in command of construction activities) immediately. The resident engineer will either resolve the situation by eliminating the adverse effect immediately or require that all actions causing these effects be halted. If work is stopped, the Service will be notified as soon as possible.

6. During project activities, all trash that may attract predators will be properly contained, removed from the work site, and disposed of regularly. Following construction, all trash and construction debris will be removed from work areas.

7. All refueling, maintenance, and staging of equipment and vehicles will occur at least 60 feet from riparian habitat or water bodies and in a location from where a spill would not drain directly toward aquatic habitat (e.g., on a slope that drains away from the water). The monitor will ensure contamination of habitat does not occur during such operations. Prior to the onset of work, Caltrans will ensure that a plan is in place for prompt and effective response to any accidental spills. All workers will be informed of the importance of preventing spills and of the appropriate measures to take should a spill occur.

8. Habitat contours will be returned to their original configuration at the end of project activities. This measure will be implemented in all areas disturbed by activities associated with the project, unless the Service and Caltrans determine that it is not feasible or modification of original contours would benefit the California red-legged frog.

9. The number of access routes, size of staging areas, and the total area of the activity will be limited to the minimum necessary to achieve the project goals. Environmentally Sensitive Areas will be delineated to confine access routes and

construction areas to the minimum area necessary to complete construction, and minimize the impact to California red-legged frog habitat; this goal includes locating access routes and construction areas outside of wetlands and riparian areas to the maximum extent practicable.

10. Caltrans will attempt to schedule work activities for times of the year when impacts to the California red-legged frog would be minimal. For example, work that would affect large pools that may support breeding would be avoided, to the maximum degree practicable, during the breeding season (November through May). Isolated pools that are important to maintain California red-legged frogs through the driest portions of the year would be avoided, to the maximum degree practicable, during the late summer and early fall. Habitat assessments, surveys, and coordination between Caltrans and the Service during project planning will be used to assist in scheduling work activities to avoid sensitive habitats during key times of the year.

11. To control sedimentation during and after project implementation, Caltrans, and the sponsoring agency will implement best management practices outlined in any authorizations or permits issued under the authorities of the Clean Water Act that it receives for the specific project. If best management practices are ineffective, Caltrans will attempt to remedy the situation immediately, in coordination with the Service.

12. If a work site is to be temporarily dewatered by pumping, intakes will be completely screened with wire mesh not larger than 0.2 inch to prevent California red-legged frogs from entering the pump system. Water will be released or pumped downstream at an appropriate rate to maintain downstream flows during construction. Upon completion of construction activities, any diversions or barriers to flow will be removed in a manner that would allow flow to resume with the least disturbance to the substrate. Alteration of the stream bed will be minimized to the maximum extent possible; any imported material will be removed from the stream bed upon completion of the project.

13. Unless approved by the Service, water will not be impounded in a manner that may attract California red-legged frogs.

14. A Service-approved biologist will permanently remove any individuals of non-native species, such as bullfrogs (*Rana catesbeiana*), signal and red swamp crayfish (*Pacifasticus leniusculus; Procambarus clarkii*), and centrarchid fishes from the project area, to the maximum extent possible. The Service-approved biologist will be responsible for ensuring his or her activities are in compliance with the California Fish and Game Code.

15. If Caltrans demonstrates that disturbed areas have been restored to conditions that allow them to function as habitat for the California red-legged frog, these areas will not be included in the amount of total habitat permanently disturbed.

16. To ensure that diseases are not conveyed between work sites by the Service-approved biologist, the fieldwork code of practice developed by the Declining Amphibian Populations Task Force will be followed at all times. A copy of the code of practice is enclosed.

17. Project sites will be re-vegetated with an assemblage of native riparian, wetland, and upland vegetation suitable for the area. Locally collected plant materials will be used to the extent practicable. Invasive, exotic plants will be controlled to the maximum extent practicable. This measure will be implemented in all areas disturbed by activities associated with the project, unless the Service and Caltrans determine that it is not feasible or practical.

18. Caltrans will not use herbicides as the primary method used to control invasive, exotic plants. However, if Caltrans determines the use of herbicides is the only feasible method for controlling invasive plants at a specific project site, it will implement the following additional protective measures for the California red-legged frog:

    a. Caltrans will not use herbicides during the breeding season for the California red-legged frog;

    b. Caltrans will conduct surveys for the California red-legged frog immediately prior to the start of any herbicide use. If found, California red-legged frogs will be relocated to suitable habitat far enough from the project area that no direct contact with herbicides would occur;

    c. Giant reed and other invasive plants will be cut and hauled out by hand and the painted with glyphosate or glyphosate-based products, such as Aquamaster® or Rodeo®;

    d. Licensed and experienced Caltrans staff or a licensed and experienced contractor will use a hand-held sprayer for foliar application of Aquamaster® or Rodeo® where large monoculture stands occur at an individual project site;

    e. All precautions will be taken to ensure that no herbicide is applied to native vegetation.

    f. Herbicides will not be applied on or near open water surfaces (no closer than 60 feet from open water).

    g. Foliar applications of herbicide will not occur when wind speeds are in excess of 3 miles per hour.

    h. No herbicides will be applied within 24 hours of forecasted rain.

i. Application of all herbicides will be done by a qualified Caltrans staff or contractors to ensure that overspray is minimized, that all application is made in accordance with label recommendations, and with implementation of all required and reasonable safety measures. A safe dye will be added to the mixture to visually denote treated sites. Application of herbicides will be consistent with the U.S. Environmental Protection Agency's Office of Pesticide Programs, Endangered Species Protection Program county bulletins.

j. All herbicides, fuels, lubricants, and equipment will be stored, poured, or refilled at least 60 feet from riparian habitat or water bodies in a location where a spill would not drain directly toward aquatic habitat. Caltrans will ensure that contamination of habitat does not occur during such operations. Prior to the onset of work, Caltrans will ensure that a plan is in place for a prompt and effective response to accidental spills. All workers will be informed of the importance of preventing spills and of the appropriate measures to take should a spill occur.

19. Upon completion of any project for which this programmatic consultation is used, Caltrans will ensure that a Project Completion Report is completed and provided to the Ventura Fish and Wildlife Office. A copy of the form is enclosed. Caltrans should include recommended modifications of the protective measures if alternative measures would facilitate compliance with the provisions of this consultation. In addition, Caltrans will reinitiate formal consultation in the event any of the following thresholds are reached as a result of projects conducted under the provisions of this consultation:

Caltrans will reinitiate consultation when, as a result of projects conducted under the provisions of this consultation:

a. 10 California red-legged frog adults or juveniles have been killed or injured in any given year. (For this and all other standards, an egg mass is considered to be one California red-legged frog.);

b. 50 California red-legged frogs have been killed or injured in total;

c. 20 acres of critical habitat for the California red-legged frog that include the primary constituent elements of aquatic breeding and non-breeding aquatic habitat and upland and dispersal habitat have been permanently lost in any given year;

d. 100 acres of critical habitat for the California red-legged frog that include the primary constituent elements of aquatic breeding and non-breeding aquatic habitat and upland and dispersal habitat have been permanently lost in total;

e. 100 acres of critical habitat for the California red-legged frog that include the primary constituent elements of aquatic breeding and non-breeding aquatic habitat and upland and dispersal habitat have been temporarily disturbed in any given year; or

f. 500 acres of critical habitat for the California red-legged frog that include the primary constituent elements of aquatic breeding and non-breeding aquatic habitat and upland and dispersal habitat have been temporarily disturbed in total.

Total acreages of dispersal habitat that may be adversely affected would be confined to the Caltrans or County rights-of-way that occur adjacent to roads, and would be linear in nature. Dispersal habitat for the California red-legged frog adjacent to roads and highways, within these rights-of-way, is generally less ecologically valuable to the California red-legged frog than larger blocks of habitat. Road corridors and associated disturbances may lead to reduced habitat quality resulting in decreased abundance or density of breeding individuals (Forman et al. 2003).

PROGRAMMATIC INFORMAL CONSULTATION

In addition to the numerous formal consultations we have conducted with Caltrans, we have also conducted many informal consultations and concurred that many of Caltrans' proposed projects are not likely to adversely affect the California red-legged frog or its critical habitat. Many of these projects are very similar to the type of projects we are considering in the subject formal consultation (e.g., bridge and culvert replacements). Because many of the avoidance measures associated with our previous concurrences are very similar, and we are often working on multiple concurrence letters simultaneously, Caltrans and the Service believe a programmatic approach to projects that are not likely to adversely affect the California red-legged frog or its critical habitat is appropriate.

Criteria for the Programmatic Concurrence

Projects that are not likely to adversely affect the California red-legged frog, or its critical habitat, must have only discountable, insignificant, or completely beneficial effects to the subspecies and its critical habitat. The Services (1998) defines the term discountable as extremely unlikely and unexpected; the term insignificant relates to the size of the impact (i.e., unable to meaningfully measure, detect, or evaluate). To make use of this programmatic informal consultation for actions that may affect, but are not likely to adversely affect the California red-legged frog or its critical habitat, Caltrans must demonstrate that the project satisfies the following criteria:

Criterion 1: California red-legged frogs are not known to occur at the proposed project site and were not found during surveys following the Guidelines for surveys and habitat assessments (Service 2007); however, the potential may exist for individuals to occur at the proposed project site because no barriers exist to preclude dispersal of California red-legged frog from nearby suitable habitat.

Criterion 2: Any effects to critical habitat must be discountable, insignificant, or completely beneficial to the California red-legged frog.

Criterion 3: The measures to avoid adverse effects to the California red-legged frog and its critical habitat, provided herein, must be implemented; these measures may be modified on a

project-specific basis to achieve avoidance of adverse effects upon the agreement of Caltrans and the Service.

Measures to Avoid Adverse Effects

For projects to qualify for the programmatic concurrence, at a minimum Caltrans will ensure that the following measures are implemented to avoid adverse effects to the California red-legged frog and its critical habitat:

1. A biologist with experience in the identification of all life stages of the California red-legged frog, and its critical habitat (75 FR 12816), will survey the project site no more than 48 hours before the onset of work activities. If any life stage of the California red-legged frog is detected the Service will be notified prior to the start of construction. If Caltrans and the Service determine that adverse effects to the California red-legged frog or its critical habitat cannot be avoided, the proposed project will not commence until the Caltrans completes the appropriate level of consultation with the Service.

2. Work activities will take place during the dry season, between April 1 and November 1, when water levels are typically are at their lowest, and California red-legged frogs are likely to be more detectable. Should activities need to be conducted outside of this period, Caltrans may conduct or authorize such activities after obtaining the Service's written approval.

3. Before work begins on any proposed project, a biologist with experience in the ecology of the California red-legged frog, as well as the identification of all its life stages, will conduct a training session for all construction personnel, which will include a description of the California red-legged frog, its critical habitat, and specific measures that are being implemented to avoid adverse effects to the subspecies during the proposed project.

4. If any life stage of the California red-legged frog is detected in the project area during construction, work will cease immediately and the resident engineer, authorized biologist, or biological monitor will notify the Ventura Fish and Wildlife Office via telephone or electronic mail. If Caltrans and the Service determine that adverse effects to California red-legged frogs cannot be avoided, construction activities will remain suspended until Caltrans and the Service complete the appropriate level of consultation.

5. During project activities, all trash that may attract predators will be properly contained, removed from the work site, and disposed of regularly. Following construction, all trash and construction debris will be removed from work areas.

6. Prior to the onset of work, Caltrans will ensure that a plan is in place for prompt and effective response to any accidental spills. All workers will be informed of the importance of preventing spills and of the appropriate measures to implement should a spill occur.

7. All refueling, maintenance, and staging of equipment and vehicles will occur at least 60 feet from aquatic or riparian habitat and not in a location from where a spill would drain directly toward aquatic habitat. The monitor will ensure contamination of aquatic or riparian habitat does not occur during such operations by implementing the spill response plan described in measure 6.

8. Plants used in re-vegetation will consist of native riparian, wetland, and upland vegetation suitable for the area. Locally collected plant materials will be used to the extent practicable. Invasive, exotic plants will be controlled to the maximum extent practicable. This measure will be implemented in all areas disturbed by activities associated with the project, unless Caltrans and the Service determine that it is not feasible or practical.

9. Habitat contours will be returned to their original configuration at the end of project activities in all areas that have been temporarily disturbed by activities associated with the project, unless Caltrans and the Service determine that it is not feasible or modification of original contours would benefit the California red-legged frog.

10. The number of access routes, size of staging areas, and the total area of the activity will be limited to the minimum necessary to achieve the project goals. Environmentally Sensitive Areas will be delineated to confine access routes and construction areas to the minimum area necessary to complete construction, and minimize the impact to habitat for the California red-legged frog; this goal includes locating access routes and construction areas outside of aquatic habitat and riparian areas to the maximum extent practicable.

11. To control sedimentation during and after project implementation, Caltrans will implement best management practices outlined in any authorizations or permits, issued under the authorities of the Clean Water Act that it receives for the specific project. If best management practices are ineffective, Caltrans will attempt to remedy the situation immediately, in coordination with the Service.

12. If a work site is to be temporarily dewatered by pumping, the intake will be screened with wire mesh not larger than 0.2 inch to prevent any California red-legged frogs not initially detected from entering the pump system. If California red-legged frogs are detected during dewatering, and adverse effects to California red-legged frogs cannot be avoided, construction activities will remain suspended until Caltrans and the Service complete the appropriate level of consultation.

13. Upon completion of construction activities, any diversions or barriers to flow will be removed in a manner that would allow flow to resume with the least disturbance to the substrate. Alteration of the creek bed will be minimized to the maximum extent possible; any imported material will be removed from the stream bed upon completion of the project.

14. Unless approved by the Service, water will not be impounded in a manner that may attract California red-legged frogs.

15. A qualified biologist will permanently remove any individuals of exotic species, such as bullfrogs, crayfish, and centrarchid fishes from the project area, to the maximum extent possible. The biologist will be responsible for ensuring his or her activities are in compliance with the California Fish and Game Code.

16. To ensure that diseases are not conveyed between work sites by the Service-approved biologist, the enclosed fieldwork code of practice developed by the Declining Amphibian Populations Task Force will be followed at all times.

This concurrence is based on the proposed avoidance measures, as well as the other criteria that a specific project must meet to qualify for use of this informal consultation. This concurrence does not authorize capture, handling, or relocation of California red-legged frogs. If at any time Caltrans determines: 1) their proposed action is likely to adversely affect the California red-legged frog or its critical habitat; and 2) the proposed project meets criteria for the programmatic biological opinion, Caltrans should notify our office immediately. If Caltrans is able to adhere to the protective measures described previously in the programmatic biological opinion, the work may continue and Caltrans will notify the Service in writing that they are proceeding with the project under the programmatic biological opinion. If at any time Caltrans or the Service conclude that the proposed action does not meet the suitability criteria for the programmatic biological opinion, all work must cease until the appropriate level of consultation has been completed.

STATUS OF THE SPECIES/CRITICAL HABITAT

California red-legged frog

The California red-legged frog was federally listed as threatened on May 23, 1996 (61 FR 25813). The Service has published a recovery plan (Service 2002).

The historical range of the California red-legged frog extended coastally from southern Mendocino County and inland from the vicinity of Redding, California, southward to northwestern Baja California, Mexico (Jennings and Hayes 1985; Storer 1925). The California red-legged frog has been extirpated or nearly extirpated from 70 percent of its former range. Historically, this species was found throughout the Central Valley and Sierra Nevada foothills. Four additional occurrences have been recorded in the Sierra Nevada foothills since listing, bringing the total to five extant populations, compared to approximately 26 historical records (71 FR 19244). Currently, California red-legged frogs are only known from 3 disjunct regions in 26 California counties and 1 disjunct region in Baja California, Mexico (Grismer 2002; Fidenci 2004; R. Smith and D. Krofta, in litt. 2005).

California red-legged frogs have been found at elevations that range from sea level to about 5,000 feet. In the Sierra Nevada Mountains, California red-legged frogs typically occur below 4,000 feet and occurrences above this elevation are atypical for the subspecies (71 FR 19244).

The California red-legged frog uses a variety of habitat types, including various aquatic systems, riparian, and upland habitats. The diet of California red-legged frogs is highly variable. Hayes and Tennant (1985) found invertebrates to be the most common food item of adults. Vertebrates, such as Pacific chorus frogs (*Pseudacris regilla*) and California mice (*Peromyscus californicus*), represented over half of the prey mass eaten by larger frogs (Hayes and Tennant 1985). Feeding activity occurs along the shoreline and on the surface of the water. Hayes and Tennant (1985) found juveniles to be active diurnally and nocturnally, whereas adults were largely nocturnal.

California red-legged frogs breed from November through March; earlier breeding has been recorded in southern localities (Storer 1925). Males appear at breeding sites from 2 to 4 weeks before females (Storer 1925). Female California red-legged frogs deposit egg masses on emergent vegetation so that the masses float on the surface of the water (Hayes and Miyamoto 1984). Egg masses contain about 2,000 to 5,000 moderate-sized, dark reddish brown eggs (Storer 1925; Jennings and Hayes 1985). Eggs hatch in 6 to 14 days (Storer 1925). Larvae undergo metamorphosis 3.5 to 7 months after hatching (Storer 1925; Wright and Wright 1949). Sexual maturity can be attained at 2 years of age by males and 3 years of age by females (Jennings and Hayes 1985); adults may live 8 to 10 years (Jennings et al. 1992) although the average life span is considered to be much lower. The California red-legged frog is a relatively large aquatic frog ranging from 1.5 to 5 inches from the tip of the snout to the vent (Stebbins 1985).

California red-legged frogs breed in aquatic habitats. Larvae, juveniles and adults have been collected from streams, creeks, ponds, marshes, plunge pools and backwaters within streams, dune ponds, lagoons, and estuaries. California red-legged frogs frequently breed in artificial impoundments, such as stock ponds, if conditions are appropriate. Although California red-legged frogs successfully breed in streams and riparian systems, high spring flows and cold temperatures in streams often make these sites risky environments for eggs and tadpoles. The importance of riparian vegetation for this species is not well understood. When riparian vegetation is present, California red-legged frogs spend considerable time resting and feeding in it; the moisture and camouflage provided by the riparian plant community likely provide good foraging habitat and may facilitate dispersal in addition to providing pools and backwater aquatic areas for breeding.

Juvenile and adult California red-legged frogs may disperse long distances from breeding sites throughout the year. They can be encountered living within streams at distances exceeding 1.8 miles from the nearest breeding site, and have been found up to 400 feet from water in adjacent dense riparian vegetation (Bulger et. al 2003). During periods of wet weather, starting with the first rains of fall, some individuals may make overland excursions through upland habitats. Most of these overland movements occur at night. Bulger et al. (2003) found marked California red-legged frogs in Santa Cruz County making overland movements of up to 2 miles over the course

of a wet season. These individual frogs were observed to make long-distance movements that are straight-line, point to point migrations over variable upland terrain rather than using riparian corridors for movement between habitats. For the California red-legged frog, suitable habitat is potentially all aquatic and riparian areas within the range of the species and includes any landscape features that provide cover and moisture (61 FR 25813).

Habitat loss and alteration, combined with over-exploitation and introduction of exotic predators, were important factors in the decline of the California red-legged frog in the early to mid-1900s. Continuing threats to the California red-legged frog include direct habitat loss due to stream alteration and loss of aquatic habitat, indirect effects of expanding urbanization, competition or predation from non-native species including the bullfrog, catfish (*Ictalurus* spp.), bass (*Micropterus* spp.), mosquito fish (*Gambusia affinis*), red swamp crayfish, and signal crayfish. Chytrid fungus (*Batrachochytrium dendrobatidis*) is a waterborne fungus that can decimate amphibian populations, and is considered a threat to California red-legged frog populations.

Critical Habitat for the California Red-legged Frog

On March 17, 2010, the Service designated critical habitat for the California red-legged frog (75 FR 12816). In total, 1,636,609 million acres was designated as critical habitat for the California red-legged frog in 27 California counties. The current designation better reflects the lands containing those essential habitat features necessary for the conservation of the California red-legged frog than did earlier designations that had been subject to litigation. A detailed discussion of the methods used in developing proposed critical habitat can be found in the final rule (75 FR 12816).

We have identified the physical or biological features essential to the conservation of the species, the Primary Constituent Elements (PCEs), that may require special management considerations or protection. Because not all life-history functions require all the PCEs, not all areas designated as critical habitat will contain all the PCEs. Based on our current knowledge of the life-history, biology, and ecology of the California red-legged frog, we determined the California red-legged frog's PCEs to consist of: 1) aquatic breeding habitat; 2) aquatic non-breeding habitat; 3) upland habitat;, and 4) dispersal habitat. Detailed descriptions of these PCEs can be found in the final rule (75 FR 12816). The following is a brief summary of the PCEs:

1) Aquatic breeding habitat consists of standing bodies of fresh water (with salinities less than 4.5 part per thousand), including natural and manmade (stock) ponds, slow moving streams or pools within streams and other ephemeral or permanent water bodies that typically become inundated during winter rains and hold water for a minimum of 20 weeks in all but the driest of years.

2) Aquatic non-breeding habitat consists of the freshwater habitats as described for aquatic breeding habitat but which may or may not hold water long enough for the subspecies to complete the aquatic portion of its lifecycle but which provide for shelter, foraging,

predator avoidance, and aquatic dispersal habitat of juvenile and adult California red-legged frogs.

3) Upland habitat consists of upland areas adjacent to or surrounding breeding and non-breeding aquatic and riparian habitat up to a distance of one mile in most cases (i.e., depending on surrounding landscape and dispersal barriers) including various vegetation types such as grassland, woodland, forest, wetland, or riparian areas that provide shelter, forage, and predator avoidance for the California red-legged frog. Upland habitat should include structural features such as boulders, rocks and organic debris (e.g., downed trees, logs), small mammal burrows, or moist leaf litter.

4) Dispersal habitat consists of accessible upland or riparian habitat within and between occupied or previously occupied sites that are located within one mile of each other, and that support movement between such sites. Dispersal habitat includes various natural habitats, and altered habitats such as agricultural fields, that do not contain barriers (e.g., heavily traveled roads without bridges or culverts) to dispersal. Dispersal habitat does not include moderate- to high-density urban or industrial developments with large expanses of asphalt or concrete, nor does it include large lakes or reservoirs over 50 acres in size, or other areas that do not contain those features identified in PCE 1, 2, or 3 as essential to the conservation of the species.

ENVIRONMENTAL BASELINE

The implementing regulations for section 7(a)(2) of the Act define the "action area" as all areas to be affected directly or indirectly by the Federal action and not merely the immediate area involved in the action (50 CFR 402.02). For the purposes of this biological opinion, we consider the action area to include the areas within Santa Cruz, San Benito Monterey, San Luis Obispo, Santa Barbara Counties that support the California red-legged frog, or its critical habitat, and that have the potential to be affected directly or indirectly by federally-funded projects. Caltrans projects that would be appropriately conducted pursuant to this biological opinion would occur within the Caltrans or County rights-of-way. Based on the anticipated impacts of the 26 projects we have consulted on and the documented effects of the 15 projects that Caltrans has completed under our previous programmatic biological opinion (Service 2003), we are not aware of any indirect effects which extend beyond the Caltrans or County right-of-way. Therefore, we assume the area within the right-of-way of each of the projects conducted pursuant to this programmatic biological opinion will encompass the direct and indirect effects of the proposed action.

All or portions of the following three recovery units (as defined in the Recovery Plan for the California red-legged frog (Service 2002) are included in the action area:

The Central Coast Recovery Unit includes, generally, the coastal portions of Santa Cruz, Monterey, and San Luis Obispo Counties. This recovery unit supports the greatest number of drainages currently occupied by the California red-legged frog.

The Diablo Range and Salinas Valley Recovery Unit includes, generally, San Benito County and the inland portions of Santa Cruz, Monterey, and San Luis Obispo Counties. This recovery unit supports "no more than 10 percent of the historic localities (of the California red-legged frog) within the Salinas basin and inner Coast Ranges " (Service 2002). Santa Barbara County and portions of San Luis Obispo Counties are within the Northern Transverse Ranges and Tehachapi Mountains Recovery Unit. California red-legged frogs are patchily distributed in the interior portion of this recovery unit and occur in numerous coastal streams in Santa Barbara County.

From April 2003 through June 2010, we issued 26 biological opinions that were tiered off of our previous programmatic biological opinion with FHWA (Service 2003). Under those 26 biological opinions we authorized the incidental take of 34 California red-legged frogs in the form of injury or mortality. Five tiered biological opinions authorized the incidental take of two California red-legged frogs, one biological opinion authorized the incidental take of four California red-legged frogs, and 20 biological opinions authorized the incidental take of one California red-legged frog.

Based on the information contained in the requests for consultation, we calculated the amount of aquatic and upland habitats that we estimate will be permanently lost and temporarily disturbed when construction of these projects has been completed (Appendix 1).

Construction has been completed on 15 projects (Appendix 2) that were conducted under the programmatic biological opinion (Service 2003). No California red-legged frogs were injured or killed during construction of these 15 projects. Five of the Project Completion Reports for these 15 projects did not include the amount of wetland or upland habit impacts. Of the 10 other completed projects, none exceeded the reinitiation thresholds identified in our 2003 programmatic biological opinion (Service 2003).

Critical Habitat

Because our previous programmatic biological opinion (Service 2003) did not address critical habitat, the Project Completion Reports associated with that biological opinion do not include the amount of critical habitat affected by each completed project in terms of the PCEs. Instead, the Project Completion Reports require that the amount of wetland and riparian habitat temporarily and permanently affected by a project be reported. We interpret the amount of wetland habitat affected by a project to include either breeding, non-breeding habitat, or both, and the riparian habitat component to include upland habitat and/or dispersal habitat. The amount of critical habitat for the California red-legged frog that has been adversely affected as a result of the 15 completed projects consists of: 0.033-acre of aquatic habitat for the California red-legged frog that was permanently lost and 0.1-acre that was temporarily disturbed; 0.20-acre of upland habitat that were permanently lost and 0.12-acre that were temporarily disturbed.

Nineteen critical habitat units may be adversely affected by actions conducted pursuant to this biological opinion. These critical habitat units occur in Santa Cruz, San Benito, Monterey, San Luis Obispo, and Santa Barbara Counties. The physical and biological features important to the

conservation of the California red-legged frog are included in the following descriptions from the final rule 75(FR) 12816:

SCZ-1, North Coastal Santa Cruz County

This unit consists of approximately 72,249 acres of land and is located along the coastline of northern Santa Cruz County, plus a small area in southern San Mateo County, from approximately Green Oaks Creek to Wilder Creek. The unit includes the following watersheds: Green Oaks Creek, Waddell Creek, East Waddell Creek, Scott Creek, Big Creek, Little Creek, San Vicente Creek, Laguna Creek, and Majors Creek. The unit is mapped from occurrences recorded at the time of listing and subsequent to the time of listing and is currently occupied. SCZ-1 contains the features that are essential for the conservation of the species. The unit also contains aquatic habitat for breeding and non-breeding activities (PCE 1 and PCE 2), and upland habitat for foraging and dispersal activities (PCE 3 and PCE 4). SCZ-1 provides connectivity between occupied sites along the coast and farther inland. In addition, it contains high-quality habitat, indicated by high density of extant occurrences, permanent and ephemeral aquatic habitat suitable for breeding, and accessible upland areas for dispersal, shelter, and food. The unit represents one of two areas designated for critical habitat in Santa Cruz County and is the northern extent of the central coast recovery unit.

The physical and biological features essential to the conservation of California red-legged frog in the SCZ-1 unit may require special management considerations or protection due to water diversions, which may alter aquatic habitats and thereby result in the direct or indirect loss of egg masses, juveniles, or adults.

SCZ-2, Watsonville Slough

This unit consists of approximately 4,057 acres of land and is located along the coastal plain in southern Santa Cruz County, north of the mouth of the Pajaro River and seaward of California Highway 1. It includes locations in the Watsonville Slough system, including all or portions of Gallighan, Hanson, Harkins, Watsonville, Struve, and the West Branch of Struve sloughs. The unit includes portions of the Corralitos Lagoon and Mouth of the Pajaro River watersheds. The unit is mapped from occurrences recorded at the time of listing and subsequent to the time of listing. SCZ-2 contains the features that are essential for the conservation of the species. This unit is currently occupied, and contains permanent and ephemeral aquatic habitat for breeding and non-breeding activities (PCE 1 and PCE 2), and contains upland habitat for foraging, dispersal activities, and shelter (PCE 3 and PCE 4). SCZ-2 also provides connectivity between occupied sites along the coast and farther inland.

The physical and biological features essential to the conservation of California red-legged frog in the SCZ-2 unit may require special management considerations or protection due predation by nonnative species, and due to urbanization and the presence of introduced invasive plants, both of which may alter aquatic or upland habitats and thereby result in the direct or indirect loss of egg masses or adults.

MNT-1, Elkhorn Slough

This unit consists of approximately 519 acres of land and is located along the coastal plain in northern Monterey County, inland from the town of Moss Landing, and it is mapped from occurrences recorded at the time of listing and subsequent to the time of listing. This unit is currently occupied. The unit includes the eastern edge of the Elkhorn Slough watershed and the western edge of the Strawberry Canyon watershed. MNT-1 contains the features that are essential for the conservation of the species. This unit contains aquatic habitat for breeding and non-breeding activities (PCE 1 and PCE 2), and upland habitat for foraging and dispersal activities (PCE 3 and PCE 4). The designation of MNT-1 is expected to prevent further fragmentation of habitat in this portion of the species' range, contains permanent and ephemeral aquatic habitats suitable for breeding, and contains upland areas for dispersal, shelter, and food. We have determined that these attributes are essential to the conservation of the species. Elkhorn Slough is unique in that it is a large estuary/freshwater slough system not typically found on the California coast. The unit consists entirely of private land.

The physical and biological features essential to the conservation of California red-legged frog in the MNT-1 unit may require special management considerations or protection due to pesticide exposure, trematode infestation, disease, and predation by nonnative species, which may affect aquatic or upland habitats and thereby result in the direct or indirect loss of egg masses or adults.

MNT-2, Carmel River

This unit consists of approximately 119,492 acres of land, is located south and southeast of the city of Monterey, and includes locations in the Carmel River drainage and nearby San Jose Creek. The unit includes the following watersheds and portions of watersheds: the southern portion of Carmel Bay, Carmel Valley, Robinson Canyon, San Jose Creek, Las Garces Creek, Hitchcock Canyon, the western portion of Lower Tularcitos Creek, Klondike Canyon, Black Rock Creek, Pine Creek, Danish Creek, Cachagua Creek, Lower Finch Creek, Bear Canyon, Bruce Fork, and Miller Canyon. It is mapped from occurrences recorded at the time of listing and subsequent to the time of listing. MNT-2 contains the features that are essential for the conservation of the species. The unit is currently occupied and contains permanent and ephemeral aquatic habitat for breeding and non-breeding activities (PCE 1 and PCE 2), and upland habitat for foraging, dispersal activities, and shelter (PCE 3 and PCE 4). The unit is the largest designated within Monterey County.

The physical and biological features essential to the conservation of California red-legged frog in the MNT-2 unit may require special management considerations or protection due to predation by nonnative species, urbanization, and water pumping and diversions, which may alter aquatic or upland habitats and thereby result in the direct or indirect loss of egg masses or adults.

MNT-3, Big Sur Coast

This unit consists of approximately 27,542 acres of land; is located along the Big Sur coastline in Monterey County, approximately from the mouth of the Little Sur River south to McWay Canyon; and includes locations in and around the Big Sur River drainage. The unit includes the following watersheds: Point Sur, Big Sur River, Ventana Creek, Sycamore Canyon, and Partington Creek. This unit was not known to be occupied at the time of listing, but surveys conducted subsequent to the time of listing show that this unit is currently occupied. Based on life history and population dynamics of the species we have determined that the area was most likely occupied at the time of listing. MNT-3 is essential for the conservation of the species because it contains the largest coastal habitat within Monterey Bay region and provides for connectivity to more interior units further north. MNT-3 also contains permanent and ephemeral aquatic habitat for breeding and non-breeding activities (PCE 1 and PCE 2), and upland habitat for foraging, dispersal activities, and shelter (PCE 3 and PCE 4). MNT-3 is currently occupied by the species.

The physical and biological features essential to the conservation of California red-legged frog in the MNT-3 unit may require special management considerations or protection due to predation by non-native species, urbanization, and water pumping and diversions, which may alter aquatic or upland habitats and thereby result in the direct or indirect loss of egg masses or adults.

SNB-1, Hollister Hills/San Benito River

This unit consists of approximately 36,294 acres of land and is located in northwestern San Benito County in the San Benito River drainage. The unit includes the following watersheds and portions of watersheds: the southern portions of San Justo Reservoir, Northeast Hollister Hills, and Upper Bird Creek; Left Fork Bird Creek; Sulfur Canyon; and the western portions of Arroyo Hondo, Willow Grove School, Paicines Ranch, and Lower Pescadero Creek. It is mapped from occurrences recorded at the time of listing and subsequent to the time of listing near Saint Frances Retreat, San Juan Oaks, Azalea Canyon, Bird Creek, Hollister Hills State Vehicle Recreation Area, Paicines Reservoir, and Tres Pinos Creek. SNB-1 contains the features that are essential for the conservation of the species. The unit contains aquatic habitat for breeding and non-breeding activities (PCE 1 and PCE 2), and upland habitat for foraging and dispersal activities (PCE 3 and PCE 4). SNB-1 also provides essential connectivity between sites on the coast plain and inner Coast Range. SNB-1 is occupied by the species, is expected to prevent further fragmentation of habitat in this portion of the species' range, and contains permanent and ephemeral aquatic habitats suitable for breeding and accessible upland areas for dispersal, shelter, and food.

The physical and biological features essential to the conservation of California red-legged frog in the SNB-1 unit may require special management considerations or protection due to predation by nonnative species, and habitat disturbance, which may alter aquatic and upland habitats and thereby result in the direct or indirect loss of egg masses or adults.

SNB-2, Antelope Creek/Upper Tres Pinos Creek

This unit consists of approximately 17,356 acres of land and is located in central San Benito County along the Tres Pinos Creek drainage within the Antelope Creek watershed. This unit was not known to be occupied at the time of listing, but surveys conducted subsequent to the time of listing show that this unit is currently occupied, and based on life history and population dynamics of the species we have determined that the area was most likely occupied at the time of listing. It is mapped from occurrence records in and along Tres Pinos Creek between the confluences of Boulder and Willow Springs Creeks. SNB-2 is essential for the conservation of the species because it provides aquatic habitat for breeding and non-breeding activities (PCE 1 and PCE 2), and upland habitat for foraging and dispersal activities (PCE 3 and PCE 4). SNB-2 is occupied by the species, is expected to prevent fragmentation of habitat in this portion of the species' range, and contains permanent and ephemeral aquatic habitats suitable for breeding and accessible upland areas for dispersal, shelter, and food. The unit consists entirely of private land. The physical and biological features essential to the conservation of California red-legged frog in the SNB-2 unit may require special management considerations or protection due to predation by nonnative species, overgrazing and trampling of aquatic and upland habitat by feral pigs, and recreational activities, which may alter aquatic and upland habitats and thereby result in the direct or indirect loss of egg masses or adults.

SNB-3, Pinnacles National Monument

This unit consists of approximately 63,753 acres of land; is located in the Gabilan Range at Pinnacles National Monument, about 3.5 miles west of the town of San Benito in southern San Benito County; and is mapped from occurrences recorded at the time of listing and subsequent to the time of listing. The unit includes the following watersheds: Gloria Lake, Bickmore Canyon, Sulfur Creek, and George Hansen Canyon. SNB-3 contains the features that are essential for the conservation of the species. The unit contains aquatic habitat for breeding and non-breeding activities (PCE 1 and PCE 2), and upland habitat for foraging and dispersal activities (PCE 3 and PCE 4). SNB-3 is expected to prevent further fragmentation of habitat in this portion of the species' range; contains permanent and ephemeral aquatic habitat suitable for breeding; contains accessible upland areas for dispersal, shelter, and food; and is occupied by the species.

The physical and biological features essential to the conservation of California red-legged frog in the SNB-3 unit may require special management considerations or protection due to predation by nonnative species, overgrazing and trampling of aquatic and upland habitat by feral pigs, and recreational activities, which may alter aquatic and upland habitats and thereby result in the direct or indirect loss of egg masses or adults.

SLO-1, Cholame

This unit consists of approximately 18,018 acres of land; and is located in northeastern San Luis Obispo, northwestern Kern, and southwestern Kings Counties; includes locations in the Cholame Creek drainage; and is mapped from occurrences recorded at time of listing and subsequent to

the time of listing. The unit includes portions of the following watersheds: the southern portion of Blue Point, the western portion of Jack Canyon, and the eastern portion of Palo Prieto Canyon. SLO-1 contains the features that are essential for the conservation of the species. The unit contains aquatic habitat for breeding and non-breeding activities (PCE 1 and PCE 2), and upland habitat for foraging and dispersal activities (PCE 3 and PCE 4). SLO-1 contains permanent and ephemeral aquatic habitats suitable for breeding; contains accessible upland areas for dispersal, shelter, and food; and is occupied by the species.

The physical and biological features essential to the conservation of California red-legged frog in the SLO-1 unit may require special management considerations or protection due to highway construction, overgrazing, and water diversions, which may alter aquatic or upland habitats and thereby result in the direct or indirect loss of egg masses or adults.

SLO-2, Piedras Blancas to Cayucos Creek

This unit consists of approximately 82,673 acres of land and is located along the coast in northwestern San Luis Obispo County from approximately Arroyo de Los Chinos southward to just before but not including Whale Rock Reservoir. The unit includes the following watersheds: Arroyo de los Chinos, Lower Arroyo de la Cruz, Arroyo del Corral, Oak Knoll Creek, Broken Bridge Creek, Pico Creek, Upper San Simeon Creek, Lower San Simeon Creek, Steiner Creek, Upper Santa Rosa Creek, Lower Santa Rosa Creek, and Lower Green Valley Creek. The unit is mapped from occurrences recorded at the time of listing and subsequent to the time of listing. SLO-2 contains the features that are essential for the conservation of the species. The unit contains aquatic habitat for breeding and non-breeding activities (PCE 1 and PCE 2), and upland habitat for foraging and dispersal activities (PCE 3 and PCE 4). SLO-2 provides connectivity within the Santa Lucia Range, and between this range and the inner Coast Range in San Luis Obispo County. This unit is occupied by the species. The unit contains high-quality habitat, indicated by high density of extant occurrences, permanent and ephemeral aquatic habitats suitable for breeding, and accessible upland areas for dispersal, shelter, and food.

The physical and biological features essential to the conservation of California red-legged frog in the SLO-2 unit may require special management considerations or protection due to predation by nonnative species, water diversion, overgrazing, and urbanization, which may alter aquatic or upland habitats and thereby result in the direct or indirect loss of egg masses or adults due to habitat modification.

SLO-3, Willow and Toro Creeks to San Luis Obispo

This unit consists of approximately 116,517 acres of land and is located near the coast in central San Luis Obispo County and extends about 1.9 miles north of the town of Morro Bay southward to just north and east of the city of San Luis Obispo. The unit includes the following watersheds: Old Creek, Whale Rock Reservoir, the southern portion of Hale Creek, Morro Bay, San Luisito Creek, the western and southern portions of Santa Margarita Creek, Choro Reservoir, Stenner Lake, Reservoir Canyon, Trout Creek, and Big Falls Canyon. The unit is mapped from

occurrences recorded at the time of listing and subsequent to the time of listing. SLO-3 contains the features that are essential for the conservation of the species. The unit is currently occupied and contains permanent and ephemeral aquatic habitat for breeding and non-breeding activities (PCE 1 and PCE 2), and upland habitat for foraging, dispersal, and shelter (PCE 3 and PCE 4). SLO-3 provides connectivity within the Santa Lucia Range, and between this range and the inner Coast Range in San Luis Obispo County.

The physical and biological features essential to the conservation of California red-legged frog in the SLO-3 unit may require special management considerations or protection due to predation by nonnative species, water diversion, overgrazing, and urbanization, which may alter aquatic or upland habitats and thereby result in the direct or indirect loss of egg masses or adults due to habitat modification.

SLO-4, Upper Salinas River

This unit consists of approximately 34,463 acres of land, is located at the base of Garcia Mountain about 17 miles east of the City of San Luis Obispo, is mapped from occurrences recorded subsequent to the time of listing, and is currently occupied by the species. Based on the life history and population dynamics of the species we have determined that the area was most likely occupied at the time of listing. The unit includes the following watersheds: Horse Mesa, Douglas Canyon, American Canyon, and Coyote Hole. This unit is essential for the conservation of the species because it is the only unit in San Luis Obispo County entirely within the interior Coast Range and provides connectivity between populations in the coastal areas and populations farther inland. SLO-4 also contains permanent and ephemeral aquatic habitats consisting of natural and manmade ponds surrounded by emergent vegetation and marshland with upland dispersal habitat comprised of riparian areas for dispersal, shelter, and foraging.

The physical and biological features essential to the conservation of California red-legged frog in the SLO-4 unit may require special management considerations or protection due to predation by nonnative species, and due to water diversion, overgrazing, and urbanization, which may alter aquatic or upland habitats and thereby result in the direct or indirect loss of egg masses or adults due to habitat modification.

STB-1, La Brea Creek

This unit consists of approximately 25,164 acres of land, is located in Los Padres National Forest in northern Santa Barbara County, and is mapped from occurrences recorded at the time of listing and subsequent to the time of listing. The unit includes the following watersheds: Bear Canyon, the southern portion of Smith Canyon, Rattlesnake Canyon, Lower South Fork La Brea Creek, and the eastern portion of Lower La Brea Creek. STB-1 contains the features that are essential for the conservation of the species. The unit contains aquatic habitat for breeding and non-breeding activities (PCE 1 and PCE 2), and upland habitat for foraging and dispersal activities (PCE 3 and PCE 4).

The physical and biological features essential to the conservation of California red-legged frog in the STB-1 unit may require special management considerations or protection due to recreational activities, which may alter aquatic or upland habitats and thereby result in the direct or indirect loss of egg masses or adults.

STB-2, San Antonio Terrace

This unit consists of approximately 12,066 acres of land, is located in northwestern Santa Barbara County near the coast, extends from about Casmalia south to the Santa Lucia Canyon near the Purisima Hills, and is mapped from occurrences recorded subsequent to the time of listing. Based on the life history and population dynamics of the species we have determined that the area was most likely occupied at the time of listing. The unit includes the following watersheds: Graciosa Canyon and Lions Head. STB-2 provides connectivity between coastal populations and populations in the Transverse Ranges. STB-2 also contains aquatic habitat for breeding and non-breeding activities (PCE 1 and PCE 2), and upland habitat for foraging and dispersal activities (PCE 3 and PCE 4). This unit is currently occupied by the species.

The physical and biological features essential to the conservation of California red-legged frog in the STB-2 unit may require special management considerations or protection due to recreational activities, which may alter aquatic or upland habitats and thereby result in the direct or indirect loss of egg masses or adults.

STB-3, Sisquoc River

This unit consists of approximately 47,559 acres of land and is located in northern Santa Barbara County and includes locations in the Sisquoc River drainage and is mapped from occurrences recorded at the time of listing and subsequent to the time of listing. The unit contains the following watersheds: the southern portion of Tunnel Canyon, Burro Canyon, Sulphur Creek, Lower Manzano Creek, Middle Manzano Creek, Fir Canyon, Upper Cachuma Creek, and the northern portion of Happy Canyon. STB-3 contains the features that are essential for the conservation of the species. The unit contains aquatic habitat for breeding and non-breeding activities (PCE 1 and PCE 2), and upland habitat for foraging and dispersal activities (PCE 3 and PCE 4). STB-3 is occupied by the species, provides connectivity between locations along the coast and the Transverse Ranges, and is essential in stabilizing populations of the species in tributaries to the Santa Ynez River.

The physical and biological features essential to the conservation of California red-legged frog in the STB-3 unit may require special management considerations or protection due predation by nonnative species, recreational activities, and poor water management practices which may alter aquatic or upland habitats and thereby result in the direct or indirect loss of egg masses or adults.

STB-4, Jalama Creek

This unit consists of approximately 7,685 acres of land and is located along the coast in southwestern Santa Barbara County about 4.4 miles south of the City of Lompoc, and is mapped from occurrences recorded at the time of listing and subsequent to the time of listing. The unit includes the Casper Creek watershed. STB-4 contains the features that are essential for the conservation of the species. The unit includes aquatic habitat for breeding and non-breeding activities (PCE 1 and PCE 2), and upland habitat for foraging and dispersal activities (PCE 3 and PCE 4). STB-4 is occupied by the species and provides connectivity between locations along the coast and the Santa Ynez River watershed.

The physical and biological features essential to the conservation of California red-legged frog in the STB-4 unit may require special management considerations or protection due to predation by nonnative species and habitat disturbance, which may alter aquatic and upland habitats and thereby result in the direct or indirect loss of egg masses or adults.

STB-5, Gaviota Creek

This unit consists of approximately 12,888 acres of land, is located along the coast in southern Santa Barbara County about 3 miles southwest of the town of Buellton, and is mapped from occurrences recorded at the time of listing and subsequent to the time of listing. The unit includes the following watersheds: Cañada de las Cruces and Cañada de la Gavota. STB-5 contains the features that are essential for the conservation of the species. The unit contains aquatic habitat for breeding and non-breeding activities (PCE 1 and PCE 2), and upland habitat for shelter, foraging and dispersal activities (PCE 3 and PCE 4). STB-5 is occupied by the species and provides connectivity between locations along the coast and the Santa Ynez River watershed.

The physical and biological features essential to the conservation of California red-legged frog in the STB-5 unit may require special management considerations or protection due to predation by nonnative species and poor water management practices, which may alter aquatic or upland habitats and thereby result in the direct or indirect loss of egg masses or adults. Populations in this unit may also require special management or protection due to their potential importance in stabilizing California red-legged frog populations in tributaries to the Santa Ynez River.

STB-6, Arroyo Quemado to Refugio Creek

This unit consists of approximately 11,985 acres of land, is located along the coast in southern Santa Barbara County about 5 miles south of the town of Solvang, and is mapped from occurrences recorded at the time of listing and subsequent to the time of listing. The unit includes the Tajiguas Creek watershed. STB-6 contains the features that are essential for the conservation of the species. The unit contains aquatic habitat for breeding and non-breeding activities (PCE 1 and PCE 2), and upland habitat for foraging and dispersal activities (PCE 3 and PCE 4). STB-6 is occupied by the species, provides connectivity between locations along the

coast and the Santa Ynez River watershed, and contains permanent and ephemeral aquatic habitats suitable for breeding, and upland areas for dispersal, shelter, and food.

The physical and biological features essential to the conservation of California red-legged frog in the STB-6 unit may require special management considerations or protection due to predation by nonnative species and poor water management practices, which may alter aquatic or upland habitats and thereby result in the direct or indirect loss of egg masses or adults. Populations in this unit may also require special management or protection due to their potential importance in stabilizing California red-legged frog populations in tributaries to the Santa Ynez River.

STB-7, Upper Santa Ynez River and Matilija Creek

This unit consists of approximately 145,121 acres of land, is located in southeastern Santa Barbara County about 5 miles north of the City of Santa Barbara, and extends into western Ventura County at Matilija Creek. It is mapped from occurrences recorded at the time of listing and subsequent to the time of listing. The unit includes the following watersheds: Los Lauveles Canyon, Redrock Canyon, Oso Canyon, Buckhorn Creek, Camuesa Creek, Devils Canyon, Indian Creek Campground, Upper Mono Creek, Lower Mono Creek, Blue Canyon Upper Agua Caliente Canyon, Diablo Canyon, Lower Agua Caliente Canyon, Juncal Canyon, Lower Matilija Creek, North Fork Matilija Creek, and Cozy Dell Canyon. STB-7 contains the features that are essential for the conservation of the species. This unit contains aquatic habitat for breeding and non-breeding activities (PCE 1 and PCE 2), and upland habitat for foraging and dispersal activities (PCE 3 and PCE 4). STB-7 is occupied by the species and provides connectivity between locations along the coast, in the Sierra Madre Mountains, and in the Ventura River watershed. It is important to species conservation and the persistence of the species in the Matilija watershed because it contains permanent and ephemeral aquatic habitats suitable for breeding, and upland areas for dispersal, shelter, and food in that portion of the unit, which will provide connectivity between populations within the Transverse Ranges and will prevent further isolation of breeding locations near the limit of the geographic range of the species. The unit as a whole contains high-quality habitat, indicated by the high density of extant occurrences, permanent and ephemeral aquatic habitat suitable for breeding, and accessible upland areas for dispersal, shelter, and food.

The physical and biological features essential to the conservation of California red-legged frog in the STB-7 unit may require special management considerations or protection due to predation by nonnative species, flood control activities, road maintenance, and recreational activities, which may alter aquatic and upland habitats and thereby result in the direct or indirect loss of egg masses or direct death of adults.

EFFECTS OF THE ACTION

California Red-legged Frog

Activities that are evaluated under this biological opinion are those that would not cause ecosystem-scale changes and are not likely to contribute to the decline of the California red-legged frog. These activities would also not preclude any of the potentially affected critical habitat units from providing the primary constituent elements necessary to support the essential life history functions (i.e., reproduction, feeding, and sheltering) of the California red-legged frog.

Direct impacts to adults, sub-adults, tadpoles, and eggs of the California red-legged frog in the footprint of projects evaluated by this biological opinion may include injury or mortality from being crushed by earth moving equipment, construction debris, and worker foot traffic. These impacts will be reduced by minimizing and clearly demarcating the boundaries of the project areas and equipment access routes and locating staging areas outside of riparian areas or other water bodies. Scheduling work activities to avoid sensitive areas, such as breeding pools during the breeding season and isolated aquatic refuges during dry periods, as proposed by Caltrans, would substantially reduce adverse effects.

The capture and handling of California red-legged frogs to move them from a work area may result in injury or mortality. Mortality may occur as a result of improper handling, containment, or transport of individuals or from releasing them into unsuitable habitat. Improper handling, containment, or transport of individuals would be reduced or prevented by use of a Service-approved biologist. California red-legged frogs may attempt to return to the capture site, especially if it contains suitable breeding habitat and the relocation site is a different pond or creek than the capture site. California red-legged frogs attempting to return to capture sites are likely to be more susceptible to predation, exposure to the elements, and vehicle stikes if they attempt to return to the original capture site. Relocating California red-legged frogs within the same drainage or water body, if possible, will reduce this threat. Overall, relocation as proposed by Caltrans is intended to reduce the risk of injury or mortality from the direct effects described above.

Construction activities, including noise and vibration, may cause California red-legged frogs to temporarily abandon habitat adjacent to work areas. This disturbance may increase the potential for predation and desiccation when California red-legged frogs leave shelter sites.

Tadpoles may be entrained by pump intakes if such devices are used to dry out work areas. However, Caltrans will ensure that pump intakes are covered with wire mesh not larger than 0.2 inch to preclude juvenile California red-legged frogs and tadpoles from entering pump intakes.

Some potential also exists for disturbance of habitat to cause the spread or establishment of non-native invasive species, such as giant reed (*Arundo donax*) or salt cedar (*Tamarix* spp.). Once established, these species degrade habitat values through several mechanisms (Service 1999).

Breeding pools surrounded by large amounts of salt cedar and giant reed may dry faster because their rates of evapotranspiration are generally greater than those of native riparian species. The abundance and diversity of prey species are generally less in dense stands of giant reed and salt cedar than in areas dominated by native plants. Additionally, these invasive species can eventually out-compete native plant species and displace them; dense aggregations of salt cedar can cause soils to become hypersaline because these plants concentrate salt from water and then excrete it onto the surrounding ground. Caltrans has proposed measures to prevent the spread or introduction of these species, such as minimizing the number of access routes, size of staging areas, and the total area of the activity; restoring disturbed areas with native species. These measures should reduce or eliminate this adverse effect.

Some actions proposed by Caltrans may involve the use of herbicides to control or eliminate non-native plant species. There are currently 66 pesticides are not approved for use in habitat for the California red-legged frog (Center for Biological Diversity v. Johnson and Nastri; case number C-02-1580-JSW). Caltrans has been exempted from this injunction for upland and riparian projects and projects that are 60 feet or more from bodies of water (G. Ruggerone pers. comm. 2007). However because California red-legged frogs may occur in upland habitat up to one mile from suitable aquatic habitat, there is still a potential for California red-legged frogs to be adversely affected by Caltrans' use of herbicides in uplands.

If Caltrans uses herbicides, Glyphosate (formulated as Rodeo® or Aquamaster®) is probably the most likely herbicide to be used. Glyphosate is the active ingredient in a variety of herbicides including Roundup®, Rodeo®, Aquamaster®, Buccaneer®, Glyfos®, Honcho®, Touchdown®, Vision®, Duramax®, Rattler®, and others. Glyphosate is a systemic herbicide that will kill broadleaf and grass species by inhibiting the production of aromatic amino acids in plants and some microorganisms that are necessary to build proteins (Devine et al. 1993). Because many animals lack the synthesis pathway that glyphosate disrupts, it is considered to have low potential to cause toxicity in animals (Devine et al. 1993). Most glyphosate products are formulated to contain surfactants that allow the active ingredients to spread over and penetrate the plant cuticles. Surfactants can be the most toxic portion of a pesticide product. The surfactant associated with many glyphosate products is a polyethoxylated tallowamine (POEA) surfactant.

California red-legged frog eggs, tadpoles, juveniles and adults can be exposed to glyphosate products and POEA surfactants in aquatic habitats through direct overspray of wetlands, drift from treated areas, or contaminated runoff from treated areas. The half-life of glyphosate in pond water ranges between 12 days and 10 weeks (Extoxnet 1996). Additionally, juvenile and adult California red-legged frogs can also be exposed to glyphosate in terrestrial habitats that have been treated. Glyphosate and POEA readily binds to soil particles and can be degraded by microbes in 7 to 70 days depending on soil conditions (Giesy et al. 2000). The half-life of glyphosate in soil can range from three to 249 days and the POEA surfactant in Roundup has a soil half-life of less than one week (Forest Service 1997).

No information is available regarding the toxicity of glyphosate products specifically to California red-legged frogs. Studies exploring the lethal and sublethal effects of glyphosate products on other amphibians, including similar frog species classified in the same genus as the California red-legged frog (*Rana*) are available but are largely focused on aquatic life stages of the species and formulations of glyphosate that include surfactants. Roundup Original Max®, a glyphosate product with POEA surfactant, was demonstrated to be moderately to highly toxic to nine species of frog and toad tadpoles including five *Rana* species: wood frog (*Rana sylvatica)*, leopard frog (*Rana pipiens*), Cascades frog (*Rana cascadae*), green frog (*Rana clamitans*), and American bullfrog (*Rana catesbeiana*) (Relyea and Jones 2009). Because the biology of these species is very similar to the California red-legged frog, we assume the effects of POEA surfactants and glyphosate formulations containing POEA, would be the same on the California red-legged frog. Mann and Bidwell (1999) also found evidence of acute toxicity to four Australian frog species exposed to Roundup,® while the isopropylamine (IPA) salt of glyphosate (the active constituent in Roundup®) was found to be non-toxic. The mortality of tadpoles is hypothesized to be caused by the lysis of gill cells from exposure to surfactants (Lajmanovich et al. 2003, Edington et al. 2004) resulting in either to asphyxiation or loss of osmotic stability (Able 1974) indicating that the life stage during which frogs and toads have gills may be particularly vulnerable. Glyphosate products containing POEA surfactants have also been shown to have sub-lethal effects to amphibians including decreased size, increased time to metamorphosis, tail malformations, and gonadal abnormalities (Govindarajulu 2008, Howe et al. 2004).

Several studies suggest that the toxicity of glyphosate products is linked with the surfactant, and not the glyphosate. Howe et al. (2004) compared the toxicity of glyphosate alone, to glyphosate with POEA surfactant, and POEA alone, on green frogs. Results indicated that the toxicity of glyphosate with POEA surfactant was similar to the POEA surfactant alone, which was much greater than glyphosate alone, indicating that the POEA was responsible for the toxic effects. In a comprehensive review of studies involving the effects of glyphosate on amphibians Govindarajulu (2008) concluded that the toxic effect of glyphosate products containing POEA are due to the POEA rather than the active glyphosate ingredient.

These studies indicate that glyphosate products formulated with POEA surfactants will likely kill or injure California red-legged frogs in aquatic habitats, with tadpoles being particularly vulnerable. Because glyphosate and POEA readily bind to soil and sediments, these chemicals may be less available to California red-legged frogs in terrestrial habitats; however, research is needed to determine toxicity mechanisms and thresholds from terrestrial exposure. Based on the literature (Howe 2004, Govindarajulu 2008), adverse effects to California red-legged frogs from the use of glyphosate products can be minimized through the use of products that do not contain a surfactant. Formulations that lack a surfactant include Rodeo and Aquamaster, which have been approved by the Environmental Protection Agency, through their registration process, for aquatic use.

A low-toxicity, non-POEA surfactant that works well with Rodeo® or Aquamaster® is Agri-Dex®, produced by Helena Chemicals. We are not aware of any information regarding the

toxicity of Agri-Dex® on amphibians, but based on the data available, Monheit et al. (2004) concluded crop oil-based surfactants (i.e. Agri-Dex®) are probably less acutely toxic to fish, aquatic invertebrates and one frog species tested, than some other types of surfactants. The amount of Agri-Dex® that resulted in acute toxicity (i.e., >1000 parts per million (ppm) (Helena Chemical Company 2004, Washington State Department of Ecology and Agriculture 2004) was levels of magnitude higher than other surfactants tested including POEA (1.6 to 0.65ppm in Haller and Stocker 2003, Giesy et al. 2000, Folmar et al. 1979). It is important to note that so called crop oil-based surfactants, which suggest these products are vegetable-based, are actually petroleum products (Forest Service 1997). There could be sub-lethal adverse effects or long-term adverse effects to California red-legged frogs, from chronic exposure to these chemicals, that have not been documented. Overall, Agri-Dex® may be less toxic than other surfactants, but the use of glyphosate without a surfactant is probably even less toxic to the California red-legged frog.

The protective measures proposed by Caltrans, including surveys prior to the application of herbicides, capture and relocation of California red-legged frogs out of harm's way and restricting the use of herbicides to the non-breeding season (dry summer months) will greatly reduce the potential for injury or mortality of the California red-legged frog as a result of herbicide use.

If water that is impounded during or after work activities creates favorable habitat conditions fornon-native predators, such as bullfrogs, crayfish, and centrarchid fishes, California red-legged frogs may suffer abnormally high rates of predation. Additionally, any time California red-legged frogs are concentrated in a small area at unusually high densities, native predators such as herons, egrets, opossums (*Didelphis virginiana*), and raccoons (*Procyon lotor*) may feed on them opportunistically. Finally, if impoundments occupied by California red-legged frogs were to dry out as a result of construction activity, California red-legged frogs may die of desiccation or be eaten by predators as they attempt to find other suitable habitat. Caltrans' proposal to avoid creating impoundments of water within project areas is likely to reduce these effects.

Trash left during or after project activities could attract predators to work sites, which could, in turn, prey on California red-legged frogs. For example, raccoons are attracted to trash and also prey opportunistically on California red-legged frogs. This potential impact will be reduced or avoided by careful control of waste products at all work sites as proposed by Caltrans.

Chytridiomycosis is an infectious disease that affects amphibians worldwide, and is caused by the chytrid fungus. Chytrid fungus is a water-borne fungus that can be spread through direct contact between aquatic animals and by a spore that can move short distances through the water. The fungus only attacks the parts of a frog's skin that have keratin (thickened skin), such as the mouthparts of tadpoles and the tougher parts of adults' skin, such as the toes. The fungus can decimate amphibian populations, causing fungal dermatitis which usually results in death in 1 to 2 weeks, but not before infected animals may have spread the fungal spores to other ponds and streams. Once a pond or waterway has become infected with chytrid fungus, the fungus stays in the water for an undetermined amount of time. Chytrid fungus could be spread if infected

California red-legged frogs are relocated and introduced into areas with healthy California red-legged frogs. It is also possible during the relocation of California red-legged frogs that infected equipment or clothing could introduce chytrid fungus into areas where it did not previously occur. Caltrans proposes to implement the fieldwork code of practice developed by the Declining Amphibian Populations Task Force which should reduce or eliminate the potential for movement of chytrid fungus.

Accidental spills of hazardous materials or careless fueling or oiling of vehicles or equipment could degrade aquatic or upland habitat to a degree where California red-legged frogs are adversely affected or killed. The potential for this impact to occur will be reduced by Caltrans' proposal to require: all refueling, maintenance, and staging of equipment and vehicles to occur at least 60 feet from riparian habitat or water bodies and not in a location from where a spill would drain directly toward aquatic habitat; the monitor to ensure contamination of habitat does not occur during such operations; that a plan is in place for prompt and effective response to any accidental spills; and all workers to be informed of the importance of preventing spills and of the appropriate measures to take should a spill occur.

Workers may intentionally or unintentionally disturb, injure, or kill California red-legged frogs. The potential for this impact to occur will be reduced by Caltrans' proposal to conduct pre-construction training informing workers of the presence and protected status of this species and the measures that are being implemented to protect it during project activities.

Work in streams or in floodplains could cause unusually high levels of siltation downstream. This siltation could smother eggs of the California red-legged frog and alter the quality of habitat to the extent that use by individuals of the species is precluded. Implementing best management practices and reducing the area to be disturbed to the minimum necessary, as proposed by Caltrans, will likely assist in reducing the amount of sediment that is washed downstream, as a result of project activities.

Caltrans has proposed that consultation would be reinitiated if 10 California red-legged frogs or 20 tadpoles are killed or injured in any given year, or if 50 California red-legged frogs are killed or injured in total. However, because of the measures that Caltrans has proposed to reduce the level of injury or morality, we expect that few California red-legged frogs would be killed or injured in any given year. Additionally, based on reproductive biology the subspecies, loss of 10 California red-legged frogs or 20 tadpoles in any given year, throughout the seven counties covered by this consultation, is not likely to compromise the conservation of the subspecies because this number represents a very small portion of the total breeding individuals assumed to be present in this region.

Critical Habitat for the California Red-legged Frog

Actions conducted pursuant to this biological opinion may be located within any one of the 19 aforementioned critical habitat units in five counties. The PCEs of critical habitat for the

California red-legged frog include: (1) aquatic breeding habitat, (2) aquatic non-breeding habitat, (3) upland habitat, and (4) dispersal habitat.

The PCEs associated with individual project sites may be permanently or temporarily altered as a result of projects conducted pursuant to this biological opinion. However, we anticipate that the effects of those projects, which must meet the criteria for use of this biological opinion, will be of such a small scale that they will not preclude the PCEs from supporting the essential life history functions of the California red-legged frog. For example, a bridge retrofitted for earthquake safety may have slightly larger footings as a result of the project. Such a minor permanent loss of aquatic habitat is not likely to compromise the ability of a stream to support the aquatic life stages of the California red-legged frog.

The reinitiation thresholds that Caltrans has proposed will ensure that the conservation of the California red-legged frog is not compromised within the affected critical habitat units. These upper limits for permanent loss of aquatic, upland, and dispersal habitat (20 acres in any given year or 100 acres in total) and upland habitat (20 acres in any given year or 100 acres in total), and temporary disturbance (100 in any given year, or 500 acrestotal over the life of the biological opinion) would be spread across the 19 critical habitat units, in which the activities covered by this biological opinion would be implemented. Given the wide distribution of a relatively minor amount of disturbance or loss of aquatic, upland, and dispersal habitat, and the high potential that most disturbance would recover within a few years, we expect the PCEs in each of the affected critical habitat units to continue to provide the life history functions essential to the conservation of the California red-legged frog.

The protective measures included in the Description of the Proposed Action section of this biological opinion would minimize adverse effects to the PCEs of critical habitat for the California red-legged frog. Based on the suitability criteria to qualify for use of this biological opinion, and the protective measures Caltrans would implement, we anticipate that any effects to critical habitat for the California red-legged frog would be temporary or minor. We do not expect such minor or temporary effects to preclude a critical habitat unit from supporting the PCEs and associated life history functions (i.e., reproduction, dispersal, feeding, and sheltering) of critical habitat for the California red-legged frog.

CUMULATIVE EFFECTS

Cumulative effects include the effects of future State, tribal, local, or private actions that are reasonably certain to occur in the action area considered in this biological opinion. Future Federal actions unrelated to the proposed action are not considered in this section because they require separate consultation pursuant to section 7 of the Act.

At this time, we do not know the specific locations of future projects that may be conducted pursuant to this biological opinion, other than that they would be sited within the Caltrans rights-of-way in San Benito, Santa Cruz, Monterey, San Luis Obispo, and Santa Barbara Counties. We

are unaware of any future non-Federal actions that are reasonably certain to occur within the action area.

CONCLUSION

After reviewing the current status of the California red-legged frog, its critical habitat, the environmental baseline, the effects of the action, projects that could be authorized under the provisions of this programmatic biological opinion, and the cumulative effects, it is the Service's biological opinion that the Caltrans' proposed action is not likely to jeopardize the continued existence of the California red-legged frog or destroy or adversely modify its critical habitat.

We have reached this conclusion because:

1. The notification process described previously allows us to review each proposed action to determine if it meets falls within the scope of this programmatic biological opinion, and to ensure the effects are not likely to be outside of the limited levels we anticipate;

2. Few California red-legged frogs are likely to be killed or injured during project activities;

3. Caltrans has established a threshold that will trigger reinitiation of formal consultation (based on a finite number of California red-legged frogs that would be injured or killed), which would not result in population level impacts to this species;

4. In comparison with the amount of critical habitat available to the California red-legged frog in San Benito, Santa Cruz, Monterey, San Luis Obispo, and Santa Barbara Counties, a relatively small amount of critical habitat would be permanently lost within each critical habitat unit and relative to the entire critical habitat designation;

5. Although we anticipate that some minor or temporary adverse effects to the PCEs in each of the 19 affected critical habitat units may occur, we do not anticipate effects of this nature to preclude those PCEs from providing the essential life history functions (i.e., reproduction, dispersal, feeding, and sheltering) necessary to ensure the conservation of the California red-legged frog because Caltrans has established a threshold of affected acres of habitat types that comprise the PCEs, that will trigger reinitation of formal consultation; and

6. Caltrans has proposed numerous measures to reduce the adverse effects of the proposed activities on the California red-legged frog and its critical habitat.

INCIDENTAL TAKE STATEMENT

Section 9 of the Act and Federal regulation pursuant to section 4(d) of the Act prohibit the take of endangered and threatened species, respectively, without special exemption. Take is defined as to harass, harm, pursue, hunt, shoot, wound, kill, trap, capture or collect, or to attempt to engage in any such conduct. Harm is further defined by the Service to include significant habitat

modification or degradation that results in death or injury to listed species by significantly impairing essential behavioral patterns, including breeding, feeding, or sheltering. Harass is defined by the Service as intentional or negligent actions that create the likelihood of injury to listed species by annoying it to such an extent as to significantly disrupt normal behavioral patterns which include, but are not limited to, breeding, feeding or sheltering. Incidental take is defined as take that is incidental to, and not the purpose of, the carrying out of an otherwise lawful activity. Under the terms of section 7(b)(4) and section 7(o)(2), taking that is incidental to and not intended as part of the agency action is not considered to be prohibited taking under the Act provided that such taking is in compliance with the terms and conditions of an incidental take statement contained in a biological opinion.

The measures described below are non-discretionary and Caltrans must make them binding conditions of any contract, permit, or funding to contractors or County Governments for the exemption in 7(o)(2) to apply. Caltrans has a continuing duty to regulate the activities covered by this incidental take statement. If Caltrans fails to adhere to the terms and conditions of the incidental take statement, the protective coverage of section 7(o)(2) may lapse. To monitor the impact of incidental take, Caltrans must report the progress of the action and its impact on the species to the Service as specified in the incidental take statement [50 CFR 402.14(i)(3)].

This biological opinion evaluates the effects of a certain scope and scale of actions that Caltrans may undertake in San Benito, Santa Cruz, Monterey, San Luis Obispo, and Santa Barbara Counties on the California red-legged frog, and its critical habitat. Because of the protective measures that Caltrans has proposed, we expect that few California red-legged frogs would be killed in any given year. All California red-legged frogs found within project areas that meet the suitability criteria described in this biological opinion may be captured and relocated. However, because capture and relocation is intended to reduce the potential for injury or mortality, and Caltrans will use biologists experienced in the capture and handling of California red-legged frogs, we anticipate that few, if any, California red-legged frogs will be injured or killed as a result of capture and relocation efforts. Finally, there is a potential for a number of California red-legged frogs to be taken as a result of exposure to herbicides, during which some may be killed or injured. The protective measures Caltrans has proposed, including conducting surveys prior to the application of herbicides, capture and relocating California red-legged frogs out of harm's way, and restricting the use of herbicides to the non-breeding season (dry summer months) of the California red-legged frog will greatly reduce the potential for injury or mortality as a result of herbicide use.

Based on the triggers for reinitiation of formal consultation that Caltrans has identified in their proposed action, we anticipate that no more than 10 adult or subadult California red-legged frogs, 10 egg masses, or 20 tadpoles would be injured or killed in a given year, or 50 California red-legged frogs during the life of this biological opinion, will be injured or killed as a result of the proposed action.

Incidental take of California red-legged frog adults, subadults, or tadpoles may be difficult to detect for the following reasons: (1) the California red-legged frog is generally difficult to detect

due to its small body size; (2) finding a dead or impaired specimen is unlikely; (3) losses may be masked by seasonal fluctuations in hydrology unrelated to the project. However, the maximum number of individuals proposed to be killed or injured each year is a relatively small portion of the population of California red-legged frogs in the action area. We do not expect the loss of these few California red-legged frog adults, subadults, egg masses, or tadpoles to compromise the ability of the species to survive and recover. Given the reproductive biology of the species, described in the Status of the Species section of this biological opinion, this number also represents a very small portion of the total number of individuals assumed to be present throughout the sub species' range. Given the wide distribution of a relatively minor amount of disturbance or temporary loss of habitat, the high potential that most disturbed areas would recover within a few years, and the ability of the California red-legged frog to survive in varying conditions, we expect the overall effect on the habitat of the California red-legged frog by the proposed activities to be minor.

This biological opinion does not exempt any activity from the prohibitions against take contained in section 9 of the Act that is not incidental to the action as described in this biological opinion. Take that occurs outside of demarcated work areas or from any activity not described in this biological opinion is not exempted from the prohibitions against take described in section 9 of the Act.

REASONABLE AND PRUDENT MEASURES

The Service believes the following reasonable and prudent measures are necessary and appropriate to minimize the take of California red-legged frogs:

1. Biologists must be authorized by the Service before they survey for, capture, and relocate California red-legged frogs from work areas.

2. Caltrans must further minimize the potential for transmitting Chytrid fungus to new locations.

The Service's evaluation of the effects of the proposed action includes consideration of the measures to minimize the adverse effects of the proposed action on the California red-legged frog that were developed by Caltrans and the Service and repeated in the Description of the Proposed Action portion of this biological opinion. Any subsequent changes in these measures proposed by Caltrans may constitute a modification of the proposed action and may warrant reinitiation of formal consultation, as specified at 50 CFR 402.16. These reasonable and prudent measures are intended to supplement the protective measures that were proposed by Caltrans as part of the proposed action.

TERMS AND CONDITIONS

To be exempt from the prohibitions of section 9 of the Act, Caltrans must comply with the following terms and conditions, which implement the reasonable and prudent measures described above. These terms and conditions are non-discretionary.

1. The following terms and conditions implement reasonable and prudent measure 1:

   1.1 Chuck Cesena, Mitch Dallas, Tom Edell, Jennifer Moonjian, Morgan Robertson, Lisa Schicker, Nancy Siepel, Jim Walth, Lisa Schicker, Cathy Stettler, and Sarah Paulson are authorized to capture, handle, relocate, survey and monitor for California red-legged frogs. Paul Holmes is authorized to independently survey and monitor for California red-legged frogs, and may capture, handle, and relocate California red-legged frogs under the direct supervision of the biologists authorized above. If Caltrans wishes to use additional biologists, it must provide their qualifications to the Service at least 30 days before they are to begin work. Additional biologists must not capture, handle, or monitor California red-legged frogs (unless under the direct, on-site supervision of the biologists authorized above) without written approval from the Service.

   1.2 Prior to the onset of grading and construction activities, Service-approved biologists must identify appropriate areas to receive translocated California red-legged frog adults and tadpoles in the action area. These areas must be in proximity to the capture site, outside of any area likely to be adversely impacted by construction activities, provide suitable habitat, and be free of exotic predatory species (e.g., bullfrogs, crayfish) to the best of the Service-approved biologist's knowledge.

   1.3 If the affected aquatic habitat includes a creek or river system, the relocation site must be within the same drainage.

   1.4 If the affected aquatic habitat includes a pond or other isolated water body, Caltrans must receive the Services approval, in writing, prior to relocating any California red-legged frogs.

If Chytrid fungus is known to occur in the drainage or pond where the proposed action would occur, California red-legged frogs must not be relocated into different drainages or ponds, without prior written approval from the Service.

REPORTING REQUIREMENTS

In addition to the pre-project notification, Caltrans must submit an annual list of projects they conducted under this programmatic concurrence and programmatic biological opinion, as described in the Description of the Proposed Action section of this document. In addition, the

enclosed Project Completion form describes the information that Caltrans must provide to the Ventura Fish and Wildlife Office upon the completion of each specific project conducted under this programmatic concurrence and programmatic biological opinion.

DISPOSITION OF DEAD OR INJURED SPECIMENS

Within 3 days of locating any dead or injured California red-legged frogs, Caltrans must notify the Ventura Fish and Wildlife Office by telephone [(805) 644-1766] and in writing (2493 Portola Road, Suite B, Ventura, California 93003). The report must include the date, time, and location of the carcass, a photograph, cause of death, if known, and any other pertinent information.

Care must be taken in handling dead specimens to preserve biological material in the best possible state for later analysis. Should any injured California red-legged frogs survive, the Service must be contacted regarding their final disposition.

The remains of California red-legged frogs found in San Benito, Santa Cruz, or Monterey Counties must be placed with the California Academy of Sciences Herpetology Department (Contact: Jens Vindum, Senior Collections Manager, California Academy of Sciences Herpetology Department (herpetology@calacademy.org), 55 Music Concourse Drive, San Francisco, California 94118.

The remains of California red-legged frogs found in San Luis Obispo, Santa Barbara, Ventura, or Los Angeles Counties must be placed with the Santa Barbara Natural History Museum (Contact: Paul Collins, Santa Barbara Natural History Museum, Vertebrate Zoology Department, 2559 Puesta Del Sol, Santa Barbara, California 93460, (805) 682-4711, extension 321). Caltrans must make arrangements regarding proper disposition of potential museum specimens prior to implementation of any actions conducted pursuant to this biological opinion.

CONSERVATION RECOMMENDATIONS

Section 7(a)(1) of the Act directs Federal agencies to use their authorities to further the purposes of the Act by carrying out conservation programs for the benefit of endangered and threatened species. Conservation recommendations are discretionary agency activities to minimize or avoid adverse effects of a proposed action on listed species or critical habitat, to help implement recovery plans, or to develop information.

1. We recommend that Caltrans expand its regional planning efforts for the California red-legged frog to further facilitate an ecosystem approach to conservation while attempting to recognize, at an early stage of planning, where conflicts between conservation of the California red-legged frog and future transportation projects may arise.

2. We encourage Caltrans, biological consultants, and/or other researchers to participate in research on California red-legged frogs. Research topics could include, but are not limited to: metapopulation dynamics, dispersal and migration studies, and the effects of

predation and habitat quality on California red-legged frogs. We encourage Caltrans to coordinate with the Service and the California Department of Fish and Game to develop research proposals under the Service's Endangered Species Conservation Grants (Section 6 Traditional) Program.

The Service requests notification of the implementation of any conservation recommendations, so we may be kept informed of actions that minimize or avoid adverse effects to or benefit the California red-legged frog and its habitat.

REINITIATION NOTICE

This concludes formal consultation on projects funded under the Federal Highway Administration's Federal Aid program that are likely to adversely affect the California red-legged frog, its critical habitat, or its proposed critical habitat. As provided in 50 CFR 402.16, reinitiation of formal consultation is required where discretionary Federal agency involvement or control over the action has been maintained (or is authorized by law), and if (1) the amount or extent of incidental take is exceeded, (2) new information reveals effects of the agency action may affect listed species or critical habitat in a manner or to an extent not considered in this opinion, (3) the agency action is subsequently modified in a manner that causes an effect on listed species or critical habitat that was not considered in this opinion, or (4) a new species is listed or critical habitat is designated that may be affected by the action.

If you have any questions, please contact Steve Kirkland of my staff at (805) 644-1766, extension 267.

Sincerely,

Diane K. Noda

Diane K. Noda
Field Supervisor

Enclosures
Caltrans Project Completion Report
The Declining Amphibian Populations Task Force Fieldwork Code of Practice

Project	Biological Opinion	Permanent Aquatic	Permanent Upland	Temp Aquatic	Temp. Upland	Critical Habitat
Picachio Road Bridge	2006	.5	0.18		.39	no
Bob Jones Bike	2007	0	0		0.39	no
Chittendon Pass	2006	0	0.27	0	0.25	no
Harkin Slough Br. Over Struve slough	2006	0.004	0.12	.08	1.16	no
Harkin Slough Br. Over Watsonville Slough	2004	0.25	0.22	0	0.71	no
Cienega Rd. Bridge	2006	0.404	0.404	0	1.19	no
San Benito River Bridge	2006	0	0	0.002	0.159	no
Salinas Rd. Interchange	2006	0.9	0.09	0	0.43	no
Pfiefer Big Sur Left Turn Lane	2006	0.002	0.26	0.002	1.2	no
Hwy 101 widening-SR 135-166	2006	0	0.22	0.25	0	no
San Simeon Creek Bridges	2006	0.3	1.8	0.4	0.25	yes*
San Luis Bay Drive	2005	0	0.25	0.005	3	no
Hollister Ave. Interchange	2005	0	0.21	0	0.084	no
Lone Tree Rd. Bridge	2005	0.005	0.19	0.005	0.27	no
Breaker Point CURE	2004	0.06	0	0.006	0	no
Jalama Creek Bridge	2004	0	0	0.24	0	yes*
Murphy Rd. Bridge	2004	0	0	0	0.22	no
Paulsen-Whiting Bridge	2004	0	0.09	0.06	0.03	no
Hollister Road Bridge	2004	0.04	0.03	0.16	0.3	yes(proposed)
Amesti Road Repair (lost funding)	2003	0.04	0.03	0.16	0.323	no
Main Street Bridge Replacement, Cambria	2007	0.19	1.13	.03	0.03	yes*
Harmony Left turn lane	2007	0.1	0.8	0.029	0.28	no
Gilardi Road Bridge Replacement	2009	0	0.1	0.035	0.333	yes*
Los Osos Valley Road Widening	2008	0.35	1.75	0.5	4.2	yes*
California Coastal Trail Gaviota Segment	2009	0	0.15	0	0.5	yes*
Guadalupe Ditches Project	2010	0	0	3.42	0	no

Appendix 1. Amount of California red-legged frog habitat anticipated to be permanently lost and temporarily disturbed.
***Construction not completed and project within March 17, 2010 critical habitat designation**

Project	Biological Opinion	Construction completed	Perm. Aquatic	Temp. Aquatic	Perm. Upland	Temp. Upland
Picachio Road Bridge	2006	2007	Not reported	Not reported	Not reported	Not reported
Bob Jones Bike Path #3	2007	2008	None reported	None reported	None reported	0.138
Chittendon Pass	2006	2009	None reported	Not reported	Not reported	Not reported
Harkin Slough Road over Struve slough	2006	2008	0.004	0.61	0.44	0.71
Harkin Slough Road over Watsonville Slough	2004	2007	0.007	2.88	0	0
Cienega Rd. Bridge	2006	2007	0.032	None reported	0.404	0.159
Pfiefer Big Sur Left Turn Lane	2006	2009	Not reported	Not reported	Not reported	Not reported
Lone Tree Rd. Bridge	2005	2008	0.005	0.005	0.19	None reported
Breaker Point CURE	2004	2006	0.138	0.219	(Included in acres of riparian)	1.33
Murphy Rd. Bridge	2004	2006	Not reported	Not reported	Not reported	Not reported
Paulsen-Whiting Bridge	2004	2006	Not reported	Not reported	Not reported	0.3
San Luis Bay Drive Bridge	2005	2007	0.002	0.034	0.238	0.562
Hollister Road Bridge	2004	2009	0.033	0.15	0.20	0.12
Harmony Left turn lane	2007	2008	0.37	.014	0.016	0.10
San Benito River Bridge Seismic Retrofit	2006	2007	Not reported	Not reported	Not reported	Not reported

Appendix 2. Amount of California red-legged frog habitat permanently lost and temporarily disturbed as a result of the completed project.

REFERENCES CITED

Abel, P.D. 1974. Toxicity of synthetic detergents to fish and aquatic invertebrates. Journal of Fish Biology 6: 279-298.

Bulger, J.B., N.J. Scott, Jr., and R.B. Seymour. 2003. Terrestrial activity and conservation of adult red-legged frogs *Rana aurora draytonii* in coastal forests and grasslands. Biological Conservation 110:85-95.

Devine, M.D., Duke, S.O., and Fedtke, C. 1993. Physiology of herbicide action. Prentice Hall, Englewood Cliffs, NJ.

Edington, A.N., Sheridan, P.M., Stephenson, G.R., Thompson, D.G., and Boermans, H.J. 2004. Comparative effects of ph and Vision herbicide on two life stages of four anuran amphibian species. Environmental Toxicology and Chemistry. 23(4)815-822.

Extension Toxicology Network [EXTOXNET]. 1996. Glyphosate pesticide information profile. Available at: http://extoxnet.orst.edu/pips/glyphosa.htm. Accessed June 17, 2010.

Federal Highway Administration. 2007. Letter from Gene Fong, Division Administrator, California Division, to Diane Noda, Field Supervisor, Ventura Fish and Wildlife Office regarding the California Department of Transportation's Delegation Federal authority pursuant the Section 6005 of the Safe, Accountable, Flexible, Efficient Transportation Equity Act: A Legacy for Users (SAFETEA-LU). Dated July 17, 2007. Sacramento, California.

Fidenci, P. 2004. The California red-legged frog, *Rana aurora draytonii*, along the Arroyo Santo Domingo, Northern Baja California, Mexico. The Herpetological Journal, Volume 88. London, England.

Folmar, L.C., H.O. Sanders, and A.M. Julin. 1979. Toxicity of the herbicide glyphosate and several of its formulations to fish and aquatic invertebrates. Archives of Environmental Contamination and Toxicology 8:269-278.

Foreman, R.T.T., D. Sperling, J.A. Bissonette, A.P. Clevenger, C.D. Cutshall, V.H. Dale, L. Fahrig, R. France, C.R. Goldman, K. Heanue, J.A. Jones, F.J. Swanson, T. Turrentine, T.C. Winter. 2003. Road ecology: science and solutions. Island Press, Washington, Covelo, London. 481 pages. 2003. Road Ecology. Island Press. Washington D.C.

Gisey, J.P., Dobson, S., and Solomon, K.R. 2000. Ecotoxicological risk assessment for Roundup herbicide. Review of Environmental Contamination and Toxicology. 167:35-120.

Govindarajulu, P.P. 2008. Literature review of impacts of glyphosate herbicide on amphibians: What risks can the silvicultual use of this herbicide pose for amphibians in B.C.? Wildlife Report No. R-28. British Colombia, Ministry of Environment. Victoria, B.C.Grismer, L. 2002. Reptiles and amphibians of Baja California, Including its Pacific island and the islands in the Sea of Cortez. University of California Press, Berkeley and Los Angeles, California.

Haller, W.T. and R.K. Stocker. 2003. Toxicity of 19 adjuvants to juvenile Lepomis macrochirus (bluegill sunfish). Environmental Toxicology and Chemistry. 22(3).

Hayes, M.P. and M.M. Miyamoto. 1984. Biochemical, behavioral and body size differences between Rana aurora aurora and R. a. draytonii. Copeia 1984(4):1018-1022.

Hayes, M.P. and M.R. Jennings. 1988. Habitat correlates of distribution of the California red-legged frog (*Rana aurora draytonii*) and the foothill yellow-legged frog (*Rana boylii*): Implications for management. Pp. 144-158. In Proceedings of the symposium on the management of amphibians, reptiles, and small mammals in North America. R. Sarzo, K.E. Severson, and D.R. Patton (technical coordinators). U.S.D.A. Forest Service General Technical Report RM-166.

Hayes, M.P. and M.R. Tennant. 1985. Diet and feeding behavior of the California red-legged frog, *Rana aurora draytonii* (Ranidae). The Southwestern Naturalist 30(4):601-605.

Helena Chemical Company. 2004. Technical data sheet No. AGDX080596, for Agri-Dex product.

Howe, C.M., Berrill, M., Pauli, B.D., Helbing, C.C., Werry, K., Veldhoen, N. 2004. Toxicity of glyphosate-based pesticides to four North American frog species. Environmental Toxicology and Chemistry. 23(8)1928-1938.

Jennings, M.R., and M.P. Hayes. 1985. Pre-1900 over harvest of California red-legged frogs (*Rana aurora draytonii*): The inducement for bullfrog (*Rana catesbeiana*) introduction. Herpetologica 31(1):94-103.

Jennings, M.R., M.P. Hayes, and D.C. Holland. 1992. A petition to the U.S. Fish and Wildlife Service to place the California red-legged frog (*Rana aurora draytonii*) and the western pond turtle (*Clemmys marmorata*) on the list of endangered and threatened wildlife and plants.

Lajmanovich, R.C., Sandoval, M.T., Peltzer, P.M. 2003. Induction of Mortality and Malformation in *Scinax nasicus* tadpoles exposed to glyphosate formulations. Bulletin of Environmental Contamination and Toxicology. 70:612-618.

Mann, R.M. and J.R. Bidwell. 1999. The toxicity of glyphosate and several glyphosate formulations to four species of southwestern Australian frogs. Archives of Environmental Contamination and Toxicology. 36:193-199.

Monheit, S., J.R. Leavitt and J. Trumbo. 2004. The ecotoxicology of surfactants use with Glyphosate based herbicides. Noxious Times. Volume Number 6, Summer 2004.

Relyea, R.A. and Jones, D.K. 2009. The toxicity of Roundup Original Max to 13 species of larval amphibians. Environmental Toxicology and Chemistry. 28(9)2004-2008.

Smith, R. and D. Krofta. 2005. Field notes documenting the occurrence of California red-legged frogs in Baja California, Mexico. In litt.

Stebbins, R.C. 1985. A field guide to western reptiles and amphibians. Houghton Mifflin Company, Boston, Massachusetts.

Storer, T.I. 1925. A synopsis of the amphibia of California. University of California Publications in Zoology 27:1-342.

U.S. Fish and Wildlife Service. 1999. Recovery plan for the arroyo southwestern toad. Portland, Oregon.

U.S. Fish and Wildlife Service. 2002. Recovery plan for the California red-legged frog (*Rana aurora draytonii*). Portland, Oregon.

U.S. Fish and Wildlife Service. 2003. Programmatic biological opinion for projects funded or approved under the Federal Aid Program (HDA-CA, File #: Section 7 with Ventura USFWS, Document #: S38192) (1-8-02-F-68). Ventura, California.

U.S. Forest Service. 1997. Glyphosate herbicide information profile. U.S. Forest Service Pacific Northwest Region.

U.S. Fish and Wildlife Service and National Marine Fisheries Service. 1998. Endangered species consultation handbook - procedures for conducting consultation and conference activities under section 7 of the Endangered Species Act. U.S. Government printing office, Washingtion, D.C.

Washington State Department of Ecology and Agriculture. 2004. Summary of aquatic acute toxicity data for five spray adjuvants, and NPDES permit no. WAG-99 3000.

Wright, A.H. and A.A. Wright. 1949. Handbook of frogs and toads of the United States and Canada. Comstock Publishing Company, Inc., Ithaca, NY. xii + 640 pp.

PERSONAL COMMUNICATIONS

Ruggerone, G. 2007. Telephone conversation regarding the California Department of Transportation's exemption from the injunction of use of 66 pesticides (Center for Biological Diversity v. Johnson and Nastri). Dated April 9, 2007. Senior Environmental Planner. California Department of Transportation. San Luis Obispo, California.

Project Completion Report for Caltrans projects that may affect California red-legged frogs

Caltrans must ensure that this form is completed or that the requested information is provided in a written report upon completion of the project and restoration activities.

Mail completed form or report to: U.S. Fish and Wildlife Service, Ventura Fish and Wildlife Office, 2493 Portola Road, Suite B, Ventura, California 93003

1. Project title and location:
2. Project Completion Dates A. Construction: B: Restoration:
3. Type of actions that occurred: 4. 5. 6. 7. 8.
9. Habitat type and number of acres affected (e.g., upland, riparian) 10. 11. 12. 13. 14.
15. Linear feet of work in a stream:
16. How the site was restored and a description of the area after completion of the action: 17. 18. 19. 20. 21.
22. If no restoration occurred, the justification for not conducting this work: 23. 24. 25. 26. 27.
28. Which measures were employed to protect California red-legged frogs: 29. 30. 31. 32. 33.
34. The number of California red-legged frogs taken and the form of take: 35. 36. 37. 38. 39.
I. The number of California red-legged frogs removed from work areas to nearby undisturbed habitat and the location of that habitat: II. III. IV. V.
VI. Recommendations of any modifications to future measures to enhance protection of the California red-legged frog while simplifying compliance with the Endangered Species Act: VII. VIII. IX.

The Declining Amphibian Populations Task Force Fieldwork Code of Practice

1. Remove mud, snails, algae, and other debris from nets, traps, boots, vehicle tires, and all other surfaces. Rinse cleaned items with sterilized (e.g., boiled or treated) water before leaving each study site.

2. Scrub boots, nets, traps, and other types of equipment used in the aquatic environment with 70 percent ethanol solution or a bleach solution of one-half to one cup of bleach in one gallon of water and rinse clean with sterilized water between study sites. Avoid cleaning equipment in the immediate vicinity of a pond, wetland, or riparian area.

3. In remote locations, clean all equipment with 70 percent ethanol or a bleach solution, and rinse with sterile water upon return to the lab or a "base camp." Elsewhere, when laundry facilities are available, remove nets from poles and wash (in a protective mesh laundry bag) with bleach on a "delicate" cycle.

4. When working at sites with known or suspected disease problems, or when sampling populations of rare or isolated species, wear disposable vinyl[1] gloves and change them between handling each animal. Dedicate separate sets of nets, boots, traps, and other equipment to each site being visited. Clean and store them separately at the end of each field day.

5. Safely dispose of used cleaning materials and fluids. Do not dispose of cleaning materials and fluids in or near ponds, wetland, and riparian areas; if necessary, return them to the lab for proper disposal. Safely dispose of used disposable gloves in sealed bags.

6. When amphibians are collected, ensure the separation of animals from different sites and take great care to avoid indirect contact (e.g., via handling or reuse of containers) between them or with other captive animals. Do not expose animals to unsterilized vegetation or soils which have been taken from other sites. Always use disinfected and disposable husbandry equipment.

7. If a dead amphibian is found, place it in a sealable plastic bag and refrigerate (do not freeze). If any captured live amphibians appear unhealthy, retain each animal in a separate plastic container that allows air circulation and provides a moist environment from a damp sponge or sphagnum moss. For each collection of live or dead animals, record the date and time collected, location of collection, name of collector, condition of animal upon collection, and any other relevant environmental conditions observed at the time of collection. Immediately contact the Ventura Fish and Wildlife Office at (805) 644-1766 for further instructions.

The Fieldwork Code of Practice has been produced by the Declining Amphibian Populations Task Force with valuable assistance from Begona Arano, Andrew Cunningham, Tom Langton, Jamie Reaser, and Stan Sessions.

For further information on this Code, or on the Declining Amphibian Populations Task Force, contact John Wilkinson, Biology Department, the Open University, Walton Hall, Milton Keynes, MK7 6AA, UK. Email: DAPTF@open.ac.uk. Fax: +44 (0) 1908-65416

[1] Do not use latex gloves. Latex is toxic to amphibians.

State of California – Natural Resources Agency
DEPARTMENT OF FISH AND WILDLIFE
Region 4 – Central Region
1234 East Shaw Avenue
Fresno, California 93710
(559) 243-4593
www.wildlife.ca.gov

EDMUND G. BROWN, Jr., *Governor*
CHARLTON H. BONHAM, Director

RECEIVED
SEP 15 2014
COUNTY OF SAN LUIS OBISPO
DEPARTMENT OF PUBLIC WORKS

September 11, 2014

Katie Drexhage
County of San Luis Obispo
County Government Center, Room 206
San Luis Obsipo, California 93408

Subject: Notification of Lake or Streambed Alteration No. 1600-2014-0064-R4
Branch Mill Road Bridge Replacement Project
Tar Spring Creek – San Luis Obispo County

Dear Ms. Drexhage:

The California Department of Fish and Wildlife (Department) received your Notification of Lake or Streambed Alteration (Notification) on April 23, 2014, and the Notification was deemed complete on May 23, 2014. The Department had until July 22, 2014 to submit a draft Lake or Streambed Alteration Agreement (Agreement) to you or inform you that an Agreement is not required. The Department did not meet that date. As a result, by law, you may now complete the project described in your Notification without an Agreement.

Please note that pursuant to Fish and Game Code section 1602(a)(4)(D), if you proceed with this project, it must be the same as described and conducted in the same manner as specified in the Notification and any modifications to that Notification received by the Department in writing prior to May 23, 2014. This includes completing the project within the proposed term and seasonal work period and implementing all avoidance and mitigation measures to protect fish and wildlife resources specified in the Notification. If the term proposed in your Notification has expired, you will need to re-notify the Department before you may begin your project. Beginning or completing a project that differs in any way from the one described in the Notification may constitute a violation of Fish and Game Code section 1602.

As proposed in the Notification, the project includes activities related to the replacement of the Branch Mill Road Bridge over Tar Spring Creek. Construction includes the installation of a temporary bridge crossing downstream of the bridge site to accommodate local traffic. The replacement bridge will be a pre-cast, pre-stressed concrete bulb T bridge with abutments, piles, and rock slope protection installed above the area of ordinary high water. Removal of the old bridge will result in the removal of a barrier for fish passage. To create dry work site conditions, the Diversion and Dewatering Plan included in the Notification will be implemented. Project activity will be completed between June 1, 2015 and October 31, 2015.

Conserving California's Wildlife Since 1870

Also note that while you are entitled to complete the project without an Agreement, you are still responsible for complying with other applicable local, state, and federal laws. These include, but are not limited to, the state and federal Endangered Species Acts and Fish and Game Code sections 3503 and 3503.5 (bird nests), 5650 (water pollution), and 5901 (fish passage).

Finally, if you decide to proceed with your project without an Agreement, you must have a copy of this letter and your Notification with all attachments available at all times at the work site. If you have any questions regarding this matter, please contact Linda Connolly, Senior Environmental Scientist Supervisor, at (559) 243-4014 extension 242 or linda.connolly@wildlife.ca.gov.

Sincerely,

Dean Maustor for

Jeffrey R. Single, Ph.D.
Regional Manager

FOR DEPARTMENT USE ONLY				
Date Received	*Amount Received*	*Amount Due*	*Date Complete*	*Notification No.*
	$	$		

STATE OF CALIFORNIA

DEPARTMENT OF FISH AND WILDLIFE

NOTIFICATION OF LAKE OR STREAMBED ALTERATION

Complete EACH field, unless otherwise indicated, following the enclosed instructions and submit ALL required enclosures. Attach additional pages, if necessary.

1. APPLICANT PROPOSING PROJECT

Name	Dave Flynn, Deputy Director		
Business/Agency	Department of Public Works, County of San Luis Obispo		
Street Address	County Government Center, Room 206		
City, State, Zip	San Luis Obispo, California 93408		
Telephone	(805) 781-5252	Fax	(805) 781-1229
Email	dflynn@co.slo.ca.us		

2. CONTACT PERSON (*Complete only if different from applicant*)

Name	Katie Drexhage		
Street Address	County Government Center, Room 206		
City, State, Zip	San Luis Obispo, CA 93408		
Telephone	(805) 781-5252	Fax	(805) 781-1229
Email	kdrexhage@co.slo.ca.us		

3. PROPERTY OWNER (*Complete only if different from applicant*)

Name			
Street Address			
City, State, Zip			
Telephone		Fax	
Email			

4. PROJECT NAME AND AGREEMENT TERM

A. Project Name	Branch Mill Road Bridge Replacement Project, 300385			
B. Agreement Term Requested	☑ Regular (*5 years or less*) ☐ Long-term (*greater than 5 years*)			
C. Project Term		D. Seasonal Work Period		E. Number of Work Days
Beginning (*year*)	Ending (*year*)	Start Date (*month/day*)	End Date (*month/day*)	
2015	2015	06/01	10/31	6 to 9 months

5. AGREEMENT TYPE

Check the applicable box. If box B, C, D, or E is checked, complete the specified attachment.

A.	☑ Standard *(Most construction projects, excluding the categories listed below)*	
B.	☐ Gravel/Sand/Rock Extraction (*Attachment A*)	*Mine I.D. Number:* _____
C.	☐ Timber Harvesting (*Attachment B*)	THP *Number:* _____
D.	☐ Water Diversion/Extraction/Impoundment (*Attachment C*)	*SWRCB Number:* _____
E.	☐ Routine Maintenance (*Attachment D*)	
F.	☐ CDFW Fisheries Restoration Grant Program (FRGP)	*FRGP Contract Number* _____
G.	☐ Master	
H.	☐ Master Timber Harvesting	

6. FEES

Please see the current fee schedule to determine the appropriate notification fee. Itemize each project's estimated cost and corresponding fee. ***Note: The Department may not process this notification until the correct fee has been received.***

	A. Project	B. Project Cost	C. Project Fee
1	Branch Mill Road Bridge Replacement Project	$1,200,000	$4,912.25
2			
3			
4			
5			
		D. Base Fee *(if applicable)*	
		E. TOTAL FEE ENCLOSED	$4,912.25

7. PRIOR NOTIFICATION OR ORDER

A. Has a notification previously been submitted to, or a Lake or Streambed Alteration Agreement previously been issued by, the Department for the project described in this notification?

☐ Yes (*Provide the information below*) ☑ No

Applicant: _____ Notification Number: _____ Date: _____

B. Is this notification being submitted in response to an order, notice, or other directive ("order") by a court or administrative agency (including the Department)?

☑ No ☐ Yes (*Enclose a copy of the order, notice, or other directive. If the directive is not in writing, identify the person who directed the applicant to submit this notification and the agency he or she represents, and describe the circumstances relating to the order.*)

☐ *Continued on additional page(s)*

8. PROJECT LOCATION

A. Address or description of project location.
(Include a map that marks the location of the project with a reference to the nearest city or town, and provide driving directions from a major road or highway)

The Project is located on Branch Mill Road over Tar Spring Creek, in the southern area of San Luis Obispo County 0.85 mile east of Arroyo Grande.

From Highway 101, heading north towards Arroyo Grande, take the CA-227/Grand Ave exit. Turn right on to CA-227 N/E Grand Ave. Continue straight onto E Branch Street. Turn right onto Huasna Road. Turn rightonto Branch Mill Road. Bridge crosses Tar Spring Creek approximately 0.23 mile south of Huasna Road.

☐ *Continued on additional page(s)*

B. River, stream, or lake affected by the project.	Tar Spring Creek
C. What water body is the river, stream, or lake tributary to?	Arroyo Grande Creek
D. Is the river or stream segment affected by the project listed in the state or federal Wild and Scenic Rivers Acts?	☐ Yes ☑ No ☐ Unknown
E. County	San Luis Obispo

F. USGS 7.5 Minute Quad Map Name	G. Township	H. Range	I. Section	J. ¼ Section
Arroyo Grande NE	T 32 S	R 13 E	N/A	

☐ *Continued on additional page(s)*

K. Meridian (*check one*) ☐ Humboldt ☑ Mt. Diablo ☐ San Bernardino

L. Assessor's Parcel Number(s)

County Right of Way and 047-161-005, -012, & 047-151-010

☐ *Continued on additional page(s)*

M. Coordinates (*If available, provide at least latitude/longitude or UTM coordinates and check appropriate boxes)*

Latitude/Longitude	*Latitude:* 35 7' 58.389"	*Longitude:* 120 28' 21.864"	
	☐ Degrees/Minutes/Seconds	☑ Decimal Degrees	☐ Decimal Minutes
UTM	*Easting:*	*Northing:*	☐ Zone 10 ☐ Zone 11
Datum used for Latitude/Longitude or UTM	☑ NAD 27	☐ NAD 83 or WGS 84	

9. PROJECT CATEGORY AND WORK TYPE *(Check each box that applies)*

PROJECT CATEGORY	NEW CONSTRUCTION	REPLACE EXISTING STRUCTURE	REPAIR/MAINTAIN EXISTING STRUCTURE
Bank stabilization – bioengineering/recontouring	☐	☐	☐
Bank stabilization – rip-rap/retaining wall/gabion	✓	☐	☐
Boat dock/pier	☐	☐	☐
Boat ramp	☐	☐	☐
Bridge	☐	✓	☐
Channel clearing/vegetation management	☐	☐	☐
Culvert	☐	☐	☐
Debris basin	☐	☐	☐
Dam	☐	☐	☐
Diversion structure – weir or pump intake	✓	☐	☐
Filling of wetland, river, stream, or lake	☐	☐	☐
Geotechnical survey	☐	☐	☐
Habitat enhancement – revegetation/mitigation	✓	☐	☐
Levee	☐	☐	☐
Low water crossing	☐	☐	☐
Road/trail	☐	☐	☐
Sediment removal – pond, stream, or marina	☐	☐	☐
Storm drain outfall structure	☐	☐	☐
Temporary stream crossing	☐	☐	☐
Utility crossing : Horizontal Directional Drilling	☐	☐	☐
Jack/bore	☐	☐	☐
Open trench	☐	☐	☐
Other *(specify)*:	☐	☐	☐

10. PROJECT DESCRIPTION

A. Describe the project in detail. Photographs of the project location and immediate surrounding area should be included.

- Include any structures (e.g., rip-rap, culverts, or channel clearing) that will be placed, built, or completed in or near the stream, river, or lake.
- Specify the type and volume of materials that will be used.
- If water will be diverted or drafted, specify the purpose or use.

Enclose diagrams, drawings, plans, and/or maps that provide all of the following: site specific construction details; the dimensions of each structure and/or extent of each activity in the bed, channel, bank or floodplain; an overview of the entire project area (i.e., "bird's-eye view") showing the location of each structure and/or activity, significant area features, and where the equipment/machinery will enter and exit the project area.

The Department of Public Works proposes to replace Branch Mill Road Bridge to improve public safety by replacing the structurally deficient bridge, providing standard roadway widths, and adjusting the roadway alignment. A temporary bridge would be placed downstream of the new bridge to allow for farm equipment and contractor access across the creek. The temporary bridge crossing would provide safe crossing for farm equipment and keep them from having to travel through town and creating potential safety issues and additional traffic delays. The Project will result in the temporary disturbance of 0.61 acre of riparian habitat, permanent disturbance of 0.25 acre of riparian habitat, and temporary disturbance of 0.05 acre below the Ordinary High Water Mark (OHWM).

The proposed replacement bridge would be a Pre-Cast, Pre-Stressed Concrete Bulb T bridge. The abutments, piles, and RSP would be located above the OHWM. The fish passage barrier is identified in the Arroyo Grande Creek Watershed Management Plan prepared for the California Department of Fish and Wildlife by Central Coast Salmon Enhancement (2009). The structure is identified as a barrier for adult and juvenile steelhead. The report identifies this structure as a concrete weir structure. The removal of the existing fish passage barrier from the streambed beneath the bridge will enable seasonal freshwater marsh plant species and habitat conditions to become re-established. As seasonal freshwater marsh habitat occupies the new natural substrate areas, the function and value will increase in terms of suitable habitat for a variety of aquatic wildlife species.

Minor roadway realignment will be required in order to improve the existing roadway geometry for a higher design speed. Minor riparian removal and fills will be required for the minor realignment and also widening of the existing approach to provide for a standard width. Staging is anticipated to occur on the existing roadway.

☐ *Continued on additional page(s)*

B. Specify the equipment and machinery that will be used to complete the project.

Cranes, dozers, excavators, pile-driving hammer, concrete-mixing trucks, concrete breakers, dump trucks, & pumps

☐ *Continued on additional page(s)*

C. Will water be present during the proposed work period (specified in box 4.D) in the stream, river, or lake (specified in box 8.B).	☑ Yes ☐ No (*Skip to box 11*)
D. Will the proposed project require work in the wetted portion of the channel?	☑ Yes (*Enclose a plan to divert water around work site*) ☐ No

11. PROJECT IMPACTS

A. Describe impacts to the bed, channel, and bank of the river, stream, or lake, and the associated riparian habitat. Specify the dimensions of the modifications in length (linear feet) and area (square feet or acres) and the type and volume of material (cubic yards) that will be moved, displaced, or otherwise disturbed, if applicable.

Permanent impacts will result from 1425 cy (0.17 acres) of RSP (200 linear feet, 100 linear feet of RSP on each bank) and 30 cy of concrete for abutments within the riparian zone. Temporary impacts within CDFW jurisdiction will impact 225 linear feet.

☐ *Continued on additional page(s)*

B. Will the project affect any vegetation? ☑ Yes (*Complete the tables below*) ☐ No

Vegetation Type	Temporary Impact	Permanent Impact
Arroyo Willow Shrubland Alliance	Linear feet: 225 Total area: 0.61 acre	Linear feet: 200 Total area: 0.25 acre
	Linear feet: ____ Total area: ____	Linear feet: ____ Total area: ____

Tree Species	Number of Trees to be Removed	Trunk Diameter (range)
Coast live oak	1	7"
Arroyo Willow	11	multi-trunk, 15", 16"

☐ *Continued on additional page(s)*

C. Are any special status animal or plant species, or habitat that could support such species, known to be present on or near the project site?

☑ Yes *(List each species and/or describe the habitat below)* ☐ No ☐ Unknown

California red-legged frogs and steelhead have been found in or near Tar Spring Creek

☐ *Continued on additional page(s)*

D. Identify the source(s) of information that supports a "yes" or "no" answer above in Box 11.C.

Project Biological Assessment,Initial Study/MND, and Biological Opinions prepared by FWS + NMFS

☐ *Continued on additional page(s)*

E. Has a biological study been completed for the project site?

☑ Yes (*Enclose the biological study*) ☐ No

Note: A biological assessment or study may be required to evaluate potential project impacts on biological resources.

F. Has a hydrological study been completed for the project or project site?

☑ Yes (*Enclose the hydrological study*) ☐ No

Note: A hydrological study or other information on site hydraulics (e.g., flows, channel characteristics, and/or flood recurrence intervals) may be required to evaluate potential project impacts on hydrology.

12. MEASURES TO PROTECT FISH, WILDIFE, AND PLANT RESOURCES

A. Describe the techniques that will be used to prevent sediment from entering watercourses during and after construction.

Refer to mitigation measures BR-2, -10, -11, -12, and -18 in the MND prepared for the project (on CD). Additionally, a dewatering and diversion plan has been prepared for this project and will be implemented (refer to enclosed plans).

☐ *Continued on additional page(s)*

B. Describe project avoidance and/or minimization measures to protect fish, wildlife, and plant resources.

Refer to mitigation measures BR-1 through BR-17 in the MND prepared for the project, the Biological Opinions from NMFS and FWS (2013/9567 & 8-8-10-F-58 respectively), as well as the HMMP prepared for the project (on CD).

☐ *Continued on additional page(s)*

C. Describe any project mitigation and/or compensation measures to protect fish, wildlife, and plant resources.

The removal of the fish passage barrier will open up the channel bottom 20 to 30 feet wide, free of rock-slope-protection, under the new bridge. Removing the barrier and grading the channel will open up this area and allow opportunity for the seasonally emergent freshwater marsh to expand and grow in size. Also, refer to mitigation measures BR-1 through BR-17 in the MND prepared for the project, the Biological Opinions from NMFS and FWS (2013/9567 & 8-8-10-F-58 respectively), as well as the HMMP prepared for the project (on CD).

☐ *Continued on additional page(s)*

13. PERMITS

List any local, state, and federal permits required for the project and check the corresponding box(es). Enclose a copy of each permit that has been issued.

A. Army Corps of Engineers NWP #14 (linear transport) ☑ Applied ☐ Issued

B. Water Quality Certification from RWQCB ☑ Applied ☐ Issued

C. _____ ☐ Applied ☐ Issued

D. Unknown whether ☐ local, ☐ state, or ☐ federal permit is needed for the project. (*Check each box that applies*)

☐ *Continued on additional page(s)*

14. ENVIRONMENTAL REVIEW

A. Has a draft or final document been prepared for the project pursuant to the California Environmental Quality Act (CEQA), National Environmental Protection Act (NEPA), California Endangered Species Act (CESA) and/or federal Endangered Species Act (ESA)?

☑ Yes (*Check the box for each CEQA, NEPA, CESA, and ESA document that has been prepared and enclose a copy of each*)

☐ No (*Check the box for each CEQA, NEPA, CESA, and ESA document listed below that will be or is being prepared*)

☐ Notice of Exemption	☑ Mitigated Negative Declaration	☐ NEPA document (*type*): CE
☑ Initial Study	☐ Environmental Impact Report	☐ CESA document (*type*):
☐ Negative Declaration	☑ Notice of Determination *(Enclose)*	☐ ESA document (*type*): NMFS BO, FWS PBO
☐ THP/ NTMP	☐ Mitigation, Monitoring, Reporting Plan	

B. State Clearinghouse Number (*if applicable*)	2013081059		
C. Has a CEQA lead agency been determined?	☑ Yes (*Complete boxes D, E, and F*)	☐ No (*Skip to box 14.G*)	
D. CEQA Lead Agency	San Luis Obispo County Board of Supervisors		
E. Contact Person	Katie Drexhage	F. Telephone Number	(805) 781-5252

G. If the project described in this notification is part of a larger project or plan, briefly describe that larger project or plan.

N/A

☐ *Continued on additional page(s)*

H. Has an environmental filing fee (Fish and Game Code section 711.4) been paid?

☑ Yes (*Enclose proof of payment*) ☐ No (*Briefly explain below the reason a filing fee has not been paid)*

Note: If a filing fee is required, the Department may not finalize a Lake or Streambed Alteration Agreement until the filing fee is paid.

15. SITE INSPECTION

Check one box only.

☑ In the event the Department determines that a site inspection is necessary, I hereby authorize a Department representative to enter the property where the project described in this notification will take place at any reasonable time, and hereby certify that I am authorized to grant the Department such entry.

☑ I request the Department to first contact (*insert name*) Katie Drexhage at (*insert telephone number*) (805) 781-5252 to schedule a date and time to enter the property where the project described in this notification will take place. I understand that this may delay the Department's determination as to whether a Lake or Streambed Alteration Agreement is required and/or the Department's issuance of a draft agreement pursuant to this notification.

16. DIGITAL FORMAT

Is any of the information included as part of the notification available in digital format (i.e., CD, DVD, etc.)?

☑ Yes (Please enclose the information via digital media with the completed notification form)

☐ No

17. SIGNATURE

I hereby certify that to the best of my knowledge the information in this notification is true and correct and that I am authorized to sign this notification as, or on behalf of, the applicant. I understand that if any information in this notification is found to be untrue or incorrect, the Department may suspend processing this notification or suspend or revoke any draft or final Lake or Streambed Alteration Agreement issued pursuant to this notification. I understand also that if any information in this notification is found to be untrue or incorrect and the project described in this notification has already begun, I and/or the applicant may be subject to civil or criminal prosecution. I understand that this notification applies only to the project(s) described herein and that I and/or the applicant may be subject to civil or criminal prosecution for undertaking any project not described herein unless the Department has been separately notified of that project in accordance with Fish and Game Code section 1602 or 1611.

Dave Flynn
Signature of Applicant or Applicant's Authorized Representative

4/14/2014
Date

Dave Flynn
Print Name

CM
KD

DEPARTMENT OF THE ARMY
LOS ANGELES DISTRICT, U.S. ARMY CORPS OF ENGINEERS
2151 ALESSANDRO DRIVE, SUITE 110
VENTURA, CA 93001

May 22, 2014

RECEIVED
MAY 27 2014
COUNTY OF SAN LUIS OBISPO
DEPARTMENT OF PUBLIC WORKS

Dave Flynn
San Luis Obispo County
Public Works Department
County Government Center, Room 206
San Luis Obispo, California 93408

DEPARTMENT OF THE ARMY NATIONWIDE PERMIT VERIFICATION

Dear Mr. Flynn:

I am responding to your request (Corps File No. SPL-2012-00706-TS) for a Department of the Army permit to construct a new free-span bridge on Branch Mill Road across Tar Spring Creek to conform to California Department of Transportation standards for lane width and shoulders. The bridge abutments, rock slope protection, and all other appurtenant features of the bridge would be located outside waters of the United States. The project is located near Arroyo Grande, San Luis Obispo County, California.

Because this project would result in a discharge of dredged and/or fill material into waters of the United States a Department of the Army permit is required pursuant to Section 404 of the Clean Water Act (33 USC 1344; 33 CFR parts 323 and 330).

I have determined construction of your proposed project, if constructed as described in your application, would comply with Nationwide Permit (NWP) 14, *Linear Transportation Projects*. Specifically, and as shown in the enclosed figure(s), you are authorized to:

1. Temporarily impact approximately 0.28 acres of waters of the United States, including wetlands to dewater the portion of the construction site within Tar Spring Creek. The proposed water diversion would consist of upstream and downstream coffer dams and two pipes to convey water through the dewatered work area. The temporary water diversion would remain in place throughout the approximately nine-month-long construction period.

2. Demolish the existing Branch Mill Road Bridge and remove a degraded concrete weir from the creek.

3. Revegetate, maintain and monitor jurisdictional waters of the United States temporarily impacted by constructed activities for a period of five (5) years in accordance with the *Branch Mill at Tar Spring Creek Highway Bridge Replacement Project-Habitat Mitigation and Monitoring Plan* (dated April 2014), and the Corps/US E.P.A. Mitigation Rule (2008).

For this NWP verification letter to be valid, you must comply with all of the terms and conditions in Enclosure 1. Furthermore, you must comply with the non-discretionary Special Conditions listed below:

Special Conditions:

1. This permit is contingent upon the issuance of a section 401 Water Quality Certification (WQC). The Permittee shall abide by the terms and conditions of the WQC. The Permittee shall provide a copy of the WQC to the Corps Regulatory Division prior to initiating construction activities in waters of the United States. If the Regional Water Quality Control Board fails to act on a request for WQC within 60 days after receipt of a complete WQC application, please notify the Corps so we may consider whether a waiver of water quality certification is warranted.

2. The Permittee shall clearly mark the limits of the workspace with flagging or similar means to ensure mechanized equipment does not enter preserved waters of the U.S. and riparian wetland/habitat areas as described in the permit application. Adverse impacts to waters of the U.S. beyond the Corps-approved construction footprint are not authorized. Such impacts could result in permit suspension and revocation, administrative, civil or criminal penalties, and/or substantial, additional, compensatory mitigation requirements.

3. Within 45 calendar days of completion of authorized work in waters of the U.S., the Permittee shall submit to the Corps Regulatory Division a post-project implementation memorandum including the following information:
   a) Dates work within waters of the U.S. was initiated and completed;
   b) Summary of compliance status with each special condition of this permit (including any noncompliance that previously occurred or is currently occurring and corrective actions taken or proposed to achieve compliance);
   c) Color photographs (including map of photopoints) taken at the project site before and after construction for those aspects directly associated with permanent impacts to waters of the U.S. such that the extent of authorized fills can be verified;
   d) One copy of "as built" drawings for the entire project. Electronic submittal is preferred. All sheets must be signed, dated, and to scale. If submitting paper copies, sheets must be no larger than 11 x 17 inches; and
   e) Signed Certification of Compliance (attached as part of this permit package).

4. Within 45 calendar days of complete installation of all mitigation, the Permittee shall submit to the Corps Regulatory Division a memorandum including the following information:
   a) Date(s) all mitigation was installed and monitoring was initiated;
   b) Schedule for future mitigation monitoring and reporting pursuant to the final, Corps-approved mitigation plan;

c) Color photographs (including map of photopoints) taken at each mitigation site before and after installation such that correct installation per final, Corps-approved mitigation plan can be verified; and

d) One copy of "as built" drawings for the entire project, including all mitigation sites. Electronic submittal is preferred. All sheets must be signed, dated, and to scale. If submitting paper copies, sheets must be no larger than 11 x 17 inches.

5. This Corps permit does not authorize you to take any threatened or endangered species, in particular the California red-legged frog (*Rana draytonii*) and south-central California coast steelhead (*Oncorhynchus mykiss*) or adversely modify designated critical habitat for these species. In order to legally take a listed species, you must have separate authorization under the Endangered Species Act (ESA) (e.g. ESA Section 10 permit, or a Biological Opinion (BO) under ESA Section 7, with incidental take provisions with which you must comply). The FWS and NMFS BOs (FWS File No. 8-8-10-F-58/81440-2010-F-0382, dated May 4, 2011; NMFS File No. 2013/9567, dated November 15, 2013) contain mandatory terms and conditions to implement the reasonable and prudent measures that are associated with incidental take that is also specified in the BO. Your authorization under this Corps permit is conditional upon your compliance with all of the mandatory terms and conditions associated with incidental take of the attached BO, which terms and conditions are incorporated by reference in this permit. Failure to comply with the terms and conditions associated with incidental take of the BO, where a take of the listed species occurs, would constitute an unauthorized take, and it would also constitute non-compliance with your Corps permit. The FWS and NMFS are the appropriate authorities to determine compliance with the terms and conditions of their BO and with the ESA.

6. Pursuant to 36 C.F.R. section 800.13, in the event of any discoveries of either human remains, archeological deposits, or any other type of historic property during construction, the Permittee shall notify the Corps' Regulatory Division Staff (Theresa Stevens, Ph.D., 805-585-2146) and Corps' Archeology Staff within 24 hours (Steve Dibble at 213-452-3849 or John Killeen at 213-452-3861). The Permittee shall immediately suspend all work in any area(s) where potential cultural resources are discovered and not resume construction in the area surrounding the potential cultural resources until the Corps Regulatory Division re-authorizes project construction, per 36 C.F.R. section 800.13.

7. The Permittee shall ensure waters of the U.S. within the permit area are restored to pre-project alignments, elevation contours, and conditions, including revegetation with appropriate native plant species, as described in the final *Branch Mill at Tar Spring Creek Highway Bridge Replacement Project-Habitat Mitigation and Monitoring Plan* (dated April 2014). At a minimum, the acreage of waters of the U.S. and aquatic resource functions of each site shall equal or exceed pre-project acreage of waters of the U.S. and

aquatic resource functions by the end of the monitoring period as specified in the plan. Functions for the above impact areas shall be assessed annually using a Corps-approved functional/condition assessment method. The Permittee's responsibility to complete the required restoration as set forth in this special condition shall not be considered fulfilled until the Permittee has met or exceeded all final performance standards for each impact area and has obtained written confirmation from the Corps verifying successful restoration Note: if not done previously as part of the permit application evaluation process, then prior to initiating construction in sites within waters of the U.S. subject to authorized, temporary impacts, the permittee shall conduct a functional/condition assessment to establish pre-project (baseline) functions at each impact site.

This verification is valid through **March 18, 2017**. If you have commenced or are under contract to commence the permitted activity by that date you will have an additional twelve (12) months to complete the activity under the present NWP terms and conditions. It is incumbent upon you to comply with all of the terms and conditions of this NWP verification and to remain informed of any change to the NWPs.

A NWP does not grant any property rights or exclusive privileges. Additionally, it does not authorize any injury to the property, rights of others, nor does it authorize interference with any existing or proposed Federal project. Furthermore, it does not obviate the need to obtain other Federal, state, or local authorizations required by law.

Thank you for participating in the regulatory program. If you have any questions, contact me at 805-585-2146 or via e-mail at theresa.stevens@usace.army.mil. Please help us to evaluate and improve the regulatory experience for others by completing the customer survey form at http://corpsmapu.usace.army.mil/cm_apex/f?p=regulatory_survey.

Sincerely,

Theresa Stevens

Theresa Stevens, Ph.D.
Senior Project Manager
North Coast Branch

Enclosure

LOS ANGELES DISTRICT
U.S. ARMY CORPS OF ENGINEERS

CERTIFICATE OF COMPLIANCE WITH DEPARTMENT OF THE ARMY NATIONWIDE PERMIT

Permit Number: *SPL-2012-00706-TS*

Name of Permittee: *San Luis Obispo County Public Works Department, Dave Flynn,*

Date of Issuance: *May 22, 2014*

Upon completion of the activity authorized by this permit and the mitigation required by this permit, sign this certificate, and return it by one of the following methods;

1) Email a digital scan of the signed certificate to theresa.stevens@usace.army.mil

OR

2) Mail the signed certificate to
U.S. Army Corps of Engineers
Regulatory Division
Ventura Field Office
2151 Alessandro Drive, Suite 110
Ventura, CA 93001

I hereby certify that the authorized work and any required compensatory mitigation has been completed in accordance with the NWP authorization, including all general, regional, or activity-specific conditions.

_____ _____
Signature of Permittee Date

Enclosure 1: NATIONWIDE PERMIT NUMBER 14 (*Linear Transportation Projects*)

TERMS AND CONDITIONS

1. Nationwide Permit 14 (*Linear Transportation Projects*):

Your activity is authorized under Nationwide Permit Number 14 (*Linear Transportation Projects*), subject to the following terms:

14. Linear Transportation Projects. Activities required for the construction, expansion, modification, or improvement of linear transportation projects (e.g., roads, highways, railways, trails, airport runways, and taxiways) in waters of the United States. For linear transportation projects in non-tidal waters, the discharge cannot cause the loss of greater than 1/2-acre of waters of the United States. For linear transportation projects in tidal waters, the discharge cannot cause the loss of greater than 1/3-acre of waters of the United States. Any stream channel modification, including bank stabilization, is limited to the minimum necessary to construct or protect the linear transportation project; such modifications must be in the immediate vicinity of the project. This NWP also authorizes temporary structures, fills, and work necessary to construct the linear transportation project. Appropriate measures must be taken to maintain normal downstream flows and minimize flooding to the maximum extent practicable, when temporary structures, work, and discharges, including cofferdams, are necessary for construction activities, access fills, or dewatering of construction sites. Temporary fills must consist of materials, and be placed in a manner, that will not be eroded by expected high flows. Temporary fills must be removed in their entirety and the affected areas returned to pre-construction elevations. The areas affected by temporary fills must be revegetated, as appropriate. This NWP cannot be used to authorize non-linear features commonly associated with transportation projects, such as vehicle maintenance or storage buildings, parking lots, train stations, or aircraft hangars. Notification: The permittee must submit a pre-construction notification to the district engineer prior to commencing the activity if: (1) the loss of waters of the United States exceeds 1/10 acre; or (2) there is a discharge in a special aquatic site, including wetlands. (See general condition 27.) (Sections 10 and 404) Note: Some discharges for the construction of farm roads or forest roads, or temporary roads for moving mining equipment, may qualify for an exemption under Section 404(f) of the Clean Water Act (see 33 CFR 323.4).

Note: To qualify for NWP authorization, the prospective permittee must comply with the following general conditions, as appropriate, in addition to any regional or case-specific conditions imposed by the division engineer or district engineer. Prospective permittees should contact the appropriate Corps district office to determine if regional conditions have been imposed on an NWP. Prospective permittees should also contact the appropriate Corps district office to determine the status of Clean Water Act Section 401 water quality certification and/or Coastal Zone Management Act consistency for an NWP.

2. Nationwide Permit General Conditions: The following general conditions must be followed in order for any authorization by an NWP to be valid:

1. 1. Navigation. (a) No activity may cause more than a minimal adverse effect on navigation.
   (b) Any safety lights and signals prescribed by the U.S. Coast Guard, through regulations or otherwise, must be installed and maintained at the permittee's expense on authorized facilities in navigable waters of the United States.

(c) The permittee understands and agrees that, if future operations by the United States require the removal, relocation, or other alteration, of the structure or work herein authorized, or if, in the opinion of the Secretary of the Army or his authorized representative, said structure or work shall cause unreasonable obstruction to the free navigation of the navigable waters, the permittee will be required, upon due notice from the Corps of Engineers, to remove, relocate, or alter the structural work or obstructions caused thereby, without expense to the United States. No claim shall be made against the United States on account of any such removal or alteration.

2. Aquatic Life Movements. No activity may substantially disrupt the necessary life cycle movements of those species of aquatic life indigenous to the waterbody, including those species that normally migrate through the area, unless the activity's primary purpose is to impound water. All permanent and temporary crossings of waterbodies shall be suitably culverted, bridged, or otherwise designed and constructed to maintain low flows to sustain the movement of those aquatic species.

3. Spawning Areas. Activities in spawning areas during spawning seasons must be avoided to the maximum extent practicable. Activities that result in the physical destruction (e.g., through excavation, fill, or downstream smothering by substantial turbidity) of an important spawning area are not authorized.

4. Migratory Bird Breeding Areas. Activities in waters of the United States that serve as breeding areas for migratory birds must be avoided to the maximum extent practicable.

5. Shellfish Beds. No activity may occur in areas of concentrated shellfish populations, unless the activity is directly related to a shellfish harvesting activity authorized by NWPs 4 and 48, or is a shellfish seeding or habitat restoration activity authorized by NWP 27.

6. Suitable Material. No activity may use unsuitable material (e.g., trash, debris, car bodies, asphalt, etc.). Material used for construction or discharged must be free from toxic pollutants in toxic amounts (see Section 307 of the Clean Water Act).

7. Water Supply Intakes. No activity may occur in the proximity of a public water supply intake, except where the activity is for the repair or improvement of public water supply intake structures or adjacent bank stabilization.

8. Adverse Effects From Impoundments. If the activity creates an impoundment of water, adverse effects to the aquatic system due to accelerating the passage of water, and/or restricting its flow must be minimized to the maximum extent practicable.

9. Management of Water Flows. To the maximum extent practicable, the pre-construction course, condition, capacity, and location of open waters must be maintained for each activity, including stream channelization and storm water management activities, except as provided below. The activity must be constructed to withstand expected high flows. The activity must not restrict or impede the passage of normal or high flows, unless the primary purpose of the activity is to impound water or manage high flows. The activity may alter the pre-construction course, condition, capacity, and location of open waters if it benefits the aquatic environment (e.g., stream restoration or relocation activities).

10. Fills Within 100-Year Floodplains. The activity must comply with applicable FEMA-approved state or local floodplain management requirements.

11. Equipment. Heavy equipment working in wetlands or mudflats must be placed on mats, or other measures must be taken to minimize soil disturbance.

12. Soil Erosion and Sediment Controls. Appropriate soil erosion and sediment controls must be used and maintained in effective operating condition during construction, and all exposed soil and other fills, as well as any work below the ordinary high water mark or high tide line, must be permanently stabilized at the earliest practicable date. Permittees are encouraged to perform work within waters of the United States during periods of low-flow or no-flow.

13. Removal of Temporary Fills. Temporary fills must be removed in their entirety and the affected areas returned to pre-construction elevations. The affected areas must be revegetated, as appropriate.

14. Proper Maintenance. Any authorized structure or fill shall be properly maintained, including maintenance to ensure public safety and compliance with applicable NWP general conditions, as well as any activity-specific conditions added by the district engineer to an NWP authorization.

15. Single and Complete Project. The activity must be a single and complete project. The same NWP cannot be used more than once for the same single and complete project.

16. Wild and Scenic Rivers. No activity may occur in a component of the National Wild and Scenic River System, or in a river officially designated by Congress as a "study river" for possible inclusion in the system while the river is in an official study status, unless the appropriate Federal agency with direct management responsibility for such river, has determined in writing that the proposed activity will not adversely affect the Wild and Scenic River designation or study status. Information on Wild and Scenic Rivers may be obtained from the appropriate Federal land management agency responsible for the designated Wild and Scenic River or study river (e.g., National Park Service, U.S. Forest Service, Bureau of Land Management, U.S. Fish and Wildlife Service).

17. Tribal Rights. No activity or its operation may impair reserved tribal rights, including, but not limited to, reserved water rights and treaty fishing and hunting rights.

18. Endangered Species. (a) No activity is authorized under any NWP which is likely to directly or indirectly jeopardize the continued existence of a threatened or endangered species or a species proposed for such designation, as identified under the Federal Endangered Species Act (ESA), or which will directly or indirectly destroy or adversely modify the critical habitat of such species. No activity is authorized under any NWP which "may affect" a listed species or critical habitat, unless Section 7 consultation addressing the effects of the proposed activity has been completed.
(b) Federal agencies should follow their own procedures for complying with the requirements of the ESA. Federal permittees must provide the district engineer with the appropriate documentation to demonstrate compliance with those requirements. The district engineer will review the documentation and determine whether it is sufficient to address ESA compliance for the NWP activity, or whether additional ESA consultation is necessary.

(c) Non-federal permittees must submit a pre-construction notification to the district engineer if any listed species or designated critical habitat might be affected or is in the vicinity of the project, or if the project is located in designated critical habitat, and shall not begin work on the activity until notified by the district engineer that the requirements of the ESA have been satisfied and that the activity is authorized. For activities that might affect Federally-listed endangered or threatened species or designated critical habitat, the pre-construction notification must include the name(s) of the endangered or threatened species that might be affected by the proposed work or that utilize the designated critical habitat that might be affected by the proposed work. The district engineer will determine whether the proposed activity "may affect" or will have "no effect" to listed species and designated critical habitat and will notify the non-Federal applicant of the Corps' determination within 45 days of receipt of a complete pre-construction notification. In cases where the non-Federal applicant has identified listed species or critical habitat that might be affected or is in the vicinity of the project, and has so notified the Corps, the applicant shall not begin work until the Corps has provided notification the proposed activities will have "no effect" on listed species or critical habitat, or until Section 7 consultation has been completed. If the non-Federal applicant has not heard back from the Corps within 45 days, the applicant must still wait for notification from the Corps.
(d) As a result of formal or informal consultation with the FWS or NMFS the district engineer may add species-specific regional endangered species conditions to the NWPs.
(e) Authorization of an activity by a NWP does not authorize the "take" of a threatened or endangered species as defined under the ESA. In the absence of separate authorization (e.g., an ESA Section 10 Permit, a Biological Opinion with "incidental take" provisions, etc.) from the U.S. FWS or the NMFS, The Endangered Species Act prohibits any person subject to the jurisdiction of the United States to take a listed species, where "take" means to harass, harm, pursue, hunt, shoot, wound, kill, trap, capture, or collect, or to attempt to engage in any such conduct. The word "harm" in the definition of "take" means an act which actually kills or injures wildlife. Such an act may include significant habitat modification or degradation where it actually kills or injures wildlife by significantly impairing essential behavioral patterns, including breeding, feeding or sheltering.
(f) Information on the location of threatened and endangered species and their critical habitat can be obtained directly from the offices of the U.S. FWS and NMFS or their world wide web pages at http://www.fws.gov/ or http://www.fws.gov/ipac and http://www.noaa.gov/fisheries.html respectively.

19. Migratory Birds and Bald and Golden Eagles. The permittee is responsible for obtaining any "take" permits required under the U.S. Fish and Wildlife Service's regulations governing compliance with the Migratory Bird Treaty Act or the Bald and Golden Eagle Protection Act. The permittee should contact the appropriate local office of the U.S. Fish and Wildlife Service to determine if such "take" permits are required for a particular activity.

20. Historic Properties. (a) In cases where the district engineer determines that the activity may affect properties listed, or eligible for listing, in the National Register of Historic Places, the activity is not authorized, until the requirements of Section 106 of the National Historic Preservation Act (NHPA) have been satisfied.
(b) Federal permittees should follow their own procedures for complying with the requirements of Section 106 of the National Historic Preservation Act. Federal permittees must provide the district engineer with the appropriate documentation to demonstrate compliance with those requirements. The district engineer will review the documentation and determine whether it is sufficient to address section 106 compliance for the NWP activity, or whether additional section 106 consultation is necessary.

(c) Non-federal permittees must submit a pre-construction notification to the district engineer if the authorized activity may have the potential to cause effects to any historic properties listed on, determined to be eligible for listing on, or potentially eligible for listing on the National Register of Historic Places, including previously unidentified properties. For such activities, the pre-construction notification must state which historic properties may be affected by the proposed work or include a vicinity map indicating the location of the historic properties or the potential for the presence of historic properties. Assistance regarding information on the location of or potential for the presence of historic resources can be sought from the State Historic Preservation Officer or Tribal Historic Preservation Officer, as appropriate, and the National Register of Historic Places (see 33 CFR 330.4(g)). When reviewing pre-construction notifications, district engineers will comply with the current procedures for addressing the requirements of Section 106 of the National Historic Preservation Act. The district engineer shall make a reasonable and good faith effort to carry out appropriate identification efforts, which may include background research, consultation, oral history interviews, sample field investigation, and field survey. Based on the information submitted and these efforts, the district engineer shall determine whether the proposed activity has the potential to cause an effect on the historic properties. Where the non-Federal applicant has identified historic properties on which the activity may have the potential to cause effects and so notified the Corps, the non-Federal applicant shall not begin the activity until notified by the district engineer either that the activity has no potential to cause effects or that consultation under Section 106 of the NHPA has been completed.
(d) The district engineer will notify the prospective permittee within 45 days of receipt of a complete pre-construction notification whether NHPA Section 106 consultation is required. Section 106 consultation is not required when the Corps determines that the activity does not have the potential to cause effects on historic properties (see 36 CFR §800.3(a)). If NHPA section 106 consultation is required and will occur, the district engineer will notify the non-Federal applicant that he or she cannot begin work until Section 106 consultation is completed. If the non-Federal applicant has not heard back from the Corps within 45 days, the applicant must still wait for notification from the Corps.
(e) Prospective permittees should be aware that section 110k of the NHPA (16 U.S.C. 470h-2(k)) prevents the Corps from granting a permit or other assistance to an applicant who, with intent to avoid the requirements of Section 106 of the NHPA, has intentionally significantly adversely affected a historic property to which the permit would relate, or having legal power to prevent it, allowed such significant adverse effect to occur, unless the Corps, after consultation with the Advisory Council on Historic Preservation (ACHP), determines that circumstances justify granting such assistance despite the adverse effect created or permitted by the applicant. If circumstances justify granting the assistance, the Corps is required to notify the ACHP and provide documentation specifying the circumstances, the degree of damage to the integrity of any historic properties affected, and proposed mitigation. This documentation must include any views obtained from the applicant, SHPO/THPO, appropriate Indian tribes if the undertaking occurs on or affects historic properties on tribal lands or affects properties of interest to those tribes, and other parties known to have a legitimate interest in the impacts to the permitted activity on historic properties.

21. Discovery of Previously Unknown Remains and Artifacts. If you discover any previously unknown historic, cultural or archeological remains and artifacts while accomplishing the activity authorized by this permit, you must immediately notify the district engineer of what you have found, and to the maximum extent practicable, avoid construction activities that may affect the remains and artifacts until the required coordination has been completed. The district engineer will initiate the Federal, Tribal and

state coordination required to determine if the items or remains warrant a recovery effort or if the site is eligible for listing in the National Register of Historic Places.

22. Designated Critical Resource Waters. Critical resource waters include NOAA-managed marine sanctuaries and marine monuments, and National Estuarine Research Reserves. The district engineer may designate, after notice and opportunity for public comment, additional waters officially designated by a state as having particular environmental or ecological significance, such as outstanding national resource waters or state natural heritage sites. The district engineer may also designate additional critical resource waters after notice and opportunity for public comment.
(a) Discharges of dredged or fill material into waters of the United States are not authorized by NWPs 7, 12, 14, 16, 17, 21, 29, 31, 35, 39, 40, 42, 43, 44, 49, 50, 51, and 52 for any activity within, or directly affecting, critical resource waters, including wetlands adjacent to such waters.
(b) For NWPs 3, 8, 10, 13, 15, 18, 19, 22, 23, 25, 27, 28, 30, 33, 34, 36, 37, and 38, notification is required in accordance with general condition 31, for any activity proposed in the designated critical resource waters including wetlands adjacent to those waters. The district engineer may authorize activities under these NWPs only after it is determined that the impacts to the critical resource waters will be no more than minimal.

23. Mitigation. The district engineer will consider the following factors when determining appropriate and practicable mitigation necessary to ensure that adverse effects on the aquatic environment are minimal:
(a) The activity must be designed and constructed to avoid and minimize adverse effects, both temporary and permanent, to waters of the United States to the maximum extent practicable at the project site (i.e., on site).
(b) Mitigation in all its forms (avoiding, minimizing, rectifying, reducing, or compensating for resource losses) will be required to the extent necessary to ensure that the adverse effects to the aquatic environment are minimal.
(c) Compensatory mitigation at a minimum one-for-one ratio will be required for all wetland losses that exceed 1/10-acre and require pre-construction notification, unless the district engineer determines in writing that either some other form of mitigation would be more environmentally appropriate or the adverse effects of the proposed activity are minimal, and provides a project-specific waiver of this requirement. For wetland losses of 1/10-acre or less that require pre-construction notification, the district engineer may determine on a case-by-case basis that compensatory mitigation is required to ensure that the activity results in minimal adverse effects on the aquatic environment. Compensatory mitigation projects provided to offset losses of aquatic resources must comply with the applicable provisions of 33 CFR part 332.
(1) The prospective permittee is responsible for proposing an appropriate compensatory mitigation option if compensatory mitigation is necessary to ensure that the activity results in minimal adverse effects on the aquatic environment.
(2) Since the likelihood of success is greater and the impacts to potentially valuable uplands are reduced, wetland restoration should be the first compensatory mitigation option considered.
(3) If permittee-responsible mitigation is the proposed option, the prospective permittee is responsible for submitting a mitigation plan. A conceptual or detailed mitigation plan may be used by the district engineer to make the decision on the NWP verification request, but a final mitigation plan that addresses the applicable requirements of 33 CFR 332.4(c)(2) – (14) must be approved by the district engineer before the permittee begins work in waters of the United States, unless the district engineer determines that prior approval of the final mitigation plan is not practicable or not

necessary to ensure timely completion of the required compensatory mitigation (see 33 CFR 332.3(k)(3)).

(4) If mitigation bank or in-lieu fee program credits are the proposed option, the mitigation plan only needs to address the baseline conditions at the impact site and the number of credits to be provided.

(5) Compensatory mitigation requirements (e.g., resource type and amount to be provided as compensatory mitigation, site protection, ecological performance standards, monitoring requirements) may be addressed through conditions added to the NWP authorization, instead of components of a compensatory mitigation plan.

(d) For losses of streams or other open waters that require pre-construction notification, the district engineer may require compensatory mitigation, such as stream rehabilitation, enhancement, or preservation, to ensure that the activity results in minimal adverse effects on the aquatic environment.

(e) Compensatory mitigation will not be used to increase the acreage losses allowed by the acreage limits of the NWPs. For example, if an NWP has an acreage limit of 1/2-acre, it cannot be used to authorize any project resulting in the loss of greater than 1/2-acre of waters of the United States, even if compensatory mitigation is provided that replaces or restores some of the lost waters. However, compensatory mitigation can and should be used, as necessary, to ensure that a project already meeting the established acreage limits also satisfies the minimal impact requirement associated with the NWPs.

(f) Compensatory mitigation plans for projects in or near streams or other open waters will normally include a requirement for the restoration or establishment, maintenance, and legal protection (e.g., conservation easements) of riparian areas next to open waters. In some cases, riparian areas may be the only compensatory mitigation required. Riparian areas should consist of native species. The width of the required riparian area will address documented water quality or aquatic habitat loss concerns. Normally, the riparian area will be 25 to 50 feet wide on each side of the stream, but the district engineer may require slightly wider riparian areas to address documented water quality or habitat loss concerns. If it is not possible to establish a riparian area on both sides of a stream, or if the waterbody is a lake or coastal waters, then restoring or establishing a riparian area along a single bank or shoreline may be sufficient. Where both wetlands and open waters exist on the project site, the district engineer will determine the appropriate compensatory mitigation (e.g., riparian areas and/or wetlands compensation) based on what is best for the aquatic environment on a watershed basis. In cases where riparian areas are determined to be the most appropriate form of compensatory mitigation, the district engineer may waive or reduce the requirement to provide wetland compensatory mitigation for wetland losses.

(g) Permittees may propose the use of mitigation banks, in-lieu fee programs, or separate permittee-responsible mitigation. For activities resulting in the loss of marine or estuarine resources, permittee-responsible compensatory mitigation may be environmentally preferable if there are no mitigation banks or in-lieu fee programs in the area that have marine or estuarine credits available for sale or transfer to the permittee. For permittee-responsible mitigation, the special conditions of the NWP verification must clearly indicate the party or parties responsible for the implementation and performance of the compensatory mitigation project, and, if required, its long-term management.

(h) Where certain functions and services of waters of the United States are permanently adversely affected, such as the conversion of a forested or scrub-shrub wetland to a herbaceous wetland in a permanently maintained utility line right-of-way, mitigation may be required to reduce the adverse effects of the project to the minimal level.

24. Safety of Impoundment Structures. To ensure that all impoundment structures are safely designed, the district engineer may require non-Federal applicants to demonstrate that the structures comply with established state dam safety criteria or have been designed by qualified persons. The district engineer

may also require documentation that the design has been independently reviewed by similarly qualified persons, and appropriate modifications made to ensure safety.

25. Water Quality. Where States and authorized Tribes, or EPA where applicable, have not previously certified compliance of an NWP with CWA Section 401, individual 401 Water Quality Certification must be obtained or waived (see 33 CFR 330.4(c)). The district engineer or State or Tribe may require additional water quality management measures to ensure that the authorized activity does not result in more than minimal degradation of water quality.

26. Coastal Zone Management. In coastal states where an NWP has not previously received a state coastal zone management consistency concurrence, an individual state coastal zone management consistency concurrence must be obtained, or a presumption of concurrence must occur (see 33 CFR 330.4(d)). The district engineer or a State may require additional measures to ensure that the authorized activity is consistent with state coastal zone management requirements.

27. Regional and Case-By-Case Conditions. The activity must comply with any regional conditions that may have been added by the Division Engineer (see 33 CFR 330.4(e)) and with any case specific conditions added by the Corps or by the state, Indian Tribe, or U.S. EPA in its section 401 Water Quality Certification, or by the state in its Coastal Zone Management Act consistency determination.

28. Use of Multiple Nationwide Permits. The use of more than one NWP for a single and complete project is prohibited, except when the acreage loss of waters of the United States authorized by the NWPs does not exceed the acreage limit of the NWP with the highest specified acreage limit. For example, if a road crossing over tidal waters is constructed under NWP 14, with associated bank stabilization authorized by NWP 13, the maximum acreage loss of waters of the United States for the total project cannot exceed 1/3-acre.

29. Transfer of Nationwide Permit Verifications. If the permittee sells the property associated with a nationwide permit verification, the permittee may transfer the nationwide permit verification to the new owner by submitting a letter to the appropriate Corps district office to validate the transfer. A copy of the nationwide permit verification must be attached to the letter, and the letter must contain the following statement and signature:

    "When the structures or work authorized by this nationwide permit are still in existence at the time the property is transferred, the terms and conditions of this nationwide permit, including any special conditions, will continue to be binding on the new owner(s) of the property. To validate the transfer of this nationwide permit and the associated liabilities associated with compliance with its terms and conditions, have the transferee sign and date below."

    _____
    (Transferee)

    _____
    (Date)

30. Compliance Certification. Each permittee who receives an NWP verification letter from the Corps must provide a signed certification documenting completion of the authorized activity and any required compensatory mitigation. The success of any required permittee-responsible mitigation, including the achievement of ecological performance standards, will be addressed separately by the district engineer. The Corps will provide the permittee the certification document with the NWP verification letter. The certification document will include:
(a) A statement that the authorized work was done in accordance with the NWP authorization, including any general, regional, or activity-specific conditions;
(b) A statement that the implementation of any required compensatory mitigation was completed in accordance with the permit conditions. If credits from a mitigation bank or in-lieu fee program are used to satisfy the compensatory mitigation requirements, the certification must include the documentation required by 33 CFR 332.3(l)(3) to confirm that the permittee secured the appropriate number and resource type of credits; and
(c) The signature of the permittee certifying the completion of the work and mitigation.

31. Pre-Construction Notification. (a) Timing. Where required by the terms of the NWP, the prospective permittee must notify the district engineer by submitting a pre-construction notification (PCN) as early as possible. The district engineer must determine if the PCN is complete within 30 calendar days of the date of receipt and, if the PCN is determined to be incomplete, notify the prospective permittee within that 30 day period to request the additional information necessary to make the PCN complete. The request must specify the information needed to make the PCN complete. As a general rule, district engineers will request additional information necessary to make the PCN complete only once. However, if the prospective permittee does not provide all of the requested information, then the district engineer will notify the prospective permittee that the PCN is still incomplete and the PCN review process will not commence until all of the requested information has been received by the district engineer. The prospective permittee shall not begin the activity until either:
(1) He or she is notified in writing by the district engineer that the activity may proceed under the NWP with any special conditions imposed by the district or division engineer; or
(2) 45 calendar days have passed from the district engineer's receipt of the complete PCN and the prospective permittee has not received written notice from the district or division engineer. However, if the permittee was required to notify the Corps pursuant to general condition 18 that listed species or critical habitat might be affected or in the vicinity of the project, or to notify the Corps pursuant to general condition 20 that the activity may have the potential to cause effects to historic properties, the permittee cannot begin the activity until receiving written notification from the Corps that there is "no effect" on listed species or "no potential to cause effects" on historic properties, or that any consultation required under Section 7 of the Endangered Species Act (see 33 CFR 330.4(f)) and/or Section 106 of the National Historic Preservation (see 33 CFR 330.4(g)) has been completed. Also, work cannot begin under NWPs 21, 49, or 50 until the permittee has received written approval from the Corps. If the proposed activity requires a written waiver to exceed specified limits of an NWP, the permittee may not begin the activity until the district engineer issues the waiver. If the district or division engineer notifies the permittee in writing that an individual permit is required within 45 calendar days of receipt of a complete PCN, the permittee cannot begin the activity until an individual permit has been obtained. Subsequently, the permittee's right to proceed under the NWP may be modified, suspended, or revoked only in accordance with the procedure set forth in 33 CFR 330.5(d)(2).

(b) Contents of Pre-Construction Notification: The PCN must be in writing and include the following information:

(1) Name, address and telephone numbers of the prospective permittee;

(2) Location of the proposed project;

(3) A description of the proposed project; the project's purpose; direct and indirect adverse environmental effects the project would cause, including the anticipated amount of loss of water of the United States expected to result from the NWP activity, in acres, linear feet, or other appropriate unit of measure; any other NWP(s), regional general permit(s), or individual permit(s) used or intended to be used to authorize any part of the proposed project or any related activity. The description should be sufficiently detailed to allow the district engineer to determine that the adverse effects of the project will be minimal and to determine the need for compensatory mitigation. Sketches should be provided when necessary to show that the activity complies with the terms of the NWP. (Sketches usually clarify the project and when provided results in a quicker decision. Sketches should contain sufficient detail to provide an illustrative description of the proposed activity (e.g., a conceptual plan), but do not need to be detailed engineering plans);

(4) The PCN must include a delineation of wetlands, other special aquatic sites, and other waters, such as lakes and ponds, and perennial, intermittent, and ephemeral streams, on the project site. Wetland delineations must be prepared in accordance with the current method required by the Corps. The permittee may ask the Corps to delineate the special aquatic sites and other waters on the project site, but there may be a delay if the Corps does the delineation, especially if the project site is large or contains many waters of the United States. Furthermore, the 45 day period will not start until the delineation has been submitted to or completed by the Corps, as appropriate;

(5) If the proposed activity will result in the loss of greater than 1/10-acre of wetlands and a PCN is required, the prospective permittee must submit a statement describing how the mitigation requirement will be satisfied, or explaining why the adverse effects are minimal and why compensatory mitigation should not be required. As an alternative, the prospective permittee may submit a conceptual or detailed mitigation plan.

(6) If any listed species or designated critical habitat might be affected or is in the vicinity of the project, or if the project is located in designated critical habitat, for non-Federal applicants the PCN must include the name(s) of those endangered or threatened species that might be affected by the proposed work or utilize the designated critical habitat that may be affected by the proposed work. Federal applicants must provide documentation demonstrating compliance with the Endangered Species Act; and

(7) For an activity that may affect a historic property listed on, determined to be eligible for listing on, or potentially eligible for listing on, the National Register of Historic Places, for non-Federal applicants the PCN must state which historic property may be affected by the proposed work or include a vicinity map indicating the location of the historic property. Federal applicants must provide documentation demonstrating compliance with Section 106 of the National Historic Preservation Act.

(c) Form of Pre-Construction Notification: The standard individual permit application form (Form ENG 4345) may be used, but the completed application form must clearly indicate that it is a PCN and must include all of the information required in paragraphs (b)(1) through (7) of this general condition. A letter containing the required information may also be used.

(d) Agency Coordination: (1) The district engineer will consider any comments from Federal and state agencies concerning the proposed activity's compliance with the terms and conditions of the NWPs and the need for mitigation to reduce the project's adverse environmental effects to a minimal level.

(2) For all NWP activities that require pre-construction notification and result in the loss of greater than 1/2-acre of waters of the United States, for NWP 21, 29, 39, 40, 42, 43, 44, 50, 51, and 52 activities that require pre-construction notification and will result in the loss of greater than 300 linear feet of intermittent and ephemeral stream bed, and for all NWP 48 activities that require pre-construction notification, the district engineer will immediately provide (e.g., via e-mail, facsimile transmission, overnight mail, or other expeditious manner) a copy of the complete PCN to the appropriate Federal or state offices (U.S. FWS, state natural resource or water quality agency, EPA, State Historic Preservation Officer (SHPO) or Tribal Historic Preservation Office (THPO), and, if appropriate, the NMFS). With the exception of NWP 37, these agencies will have 10 calendar days from the date the material is transmitted to telephone or fax the district engineer notice that they intend to provide substantive, site-specific comments. The comments must explain why the agency believes the adverse effects will be more than minimal. If so contacted by an agency, the district engineer will wait an additional 15 calendar days before making a decision on the pre-construction notification. The district engineer will fully consider agency comments received within the specified time frame concerning the proposed activity's compliance with the terms and conditions of the NWPs, including the need for mitigation to ensure the net adverse environmental effects to the aquatic environment of the proposed activity are minimal. The district engineer will provide no response to the resource agency, except as provided below. The district engineer will indicate in the administrative record associated with each pre-construction notification that the resource agencies' concerns were considered. For NWP 37, the emergency watershed protection and rehabilitation activity may proceed immediately in cases where there is an unacceptable hazard to life or a significant loss of property or economic hardship will occur. The district engineer will consider any comments received to decide whether the NWP 37 authorization should be modified, suspended, or revoked in accordance with the procedures at 33 CFR 330.5.
(3) In cases of where the prospective permittee is not a Federal agency, the district engineer will provide a response to NMFS within 30 calendar days of receipt of any Essential Fish Habitat conservation recommendations, as required by Section 305(b)(4)(B) of the Magnuson-Stevens Fishery Conservation and Management Act.
(4) Applicants are encouraged to provide the Corps with either electronic files or multiple copies of pre-construction notifications to expedite agency coordination.

3. Regional Conditions for the Los Angeles District:

In accordance with General Condition Number 27, "Regional and Case-by-Case Conditions," the following Regional Conditions, as added by the Division Engineer, must be met in order for an authorization by any Nationwide to be valid:

1. For all activities in waters of the U.S. that are suitable habitat for federally listed fish species, the permittee shall design all road crossings to ensure that the passage and/or spawning of fish is not hindered. In these areas, the permittee shall employ bridge designs that span the stream or river, including pier- or pile-supported spans, or designs that use a bottomless arch culvert with a natural stream bed, unless determined to be impracticable by the Corps.

2. Nationwide Permits (NWP) 3, 7, 12-15, 17-19, 21, 23, 25, 29, 35, 36, or 39-46, 48-52 cannot be used to authorize structures, work, and/or the discharge of dredged or fill material that would result in the "loss" of wetlands, mudflats, vegetated shallows or riffle and pool complexes as defined at 40 CFR Part

230.40-45. The definition of "loss" for this regional condition is the same as the definition of "loss of waters of the United States" used for the Nationwide Permit Program. Furthermore, this regional condition applies only within the State of Arizona and within the Mojave and Sonoran (Colorado) desert regions of California. The desert regions in California are limited to four USGS Hydrologic Unit Code (HUC) accounting units (Lower Colorado -150301, Northern Mojave-180902, Southern Mojave-181001, and Salton Sea-181002).

3. When a pre-construction notification (PCN) is required, the appropriate U.S. Army Corps of Engineers (Corps) District shall be notified in accordance with General Condition 31 using either the South Pacific Division PCN Checklist or a signed application form (ENG Form 4345) with an attachment providing information on compliance with all of the General and Regional Conditions. The PCN Checklist and application form are available at: http://www.spl.usace.army.mil/missions/regulatory. In addition, the PCN shall include:
   a. A written statement describing how the activity has been designed to avoid and minimize adverse effects, both temporary and permanent, to waters of the United States;
   b. Drawings, including plan and cross-section views, clearly depicting the location, size and dimensions of the proposed activity as well as the location of delineated waters of the U.S. on the site. The drawings shall contain a title block, legend and scale, amount (in cubic yards) and area (in acres) of fill in Corps jurisdiction, including both permanent and temporary fills/structures. The ordinary high water mark or, if tidal waters, the mean high water mark and high tide line, should be shown (in feet), based on National Geodetic Vertical Datum (NGVD) or other appropriate referenced elevation. All drawings for projects located within the boundaries of the Los Angeles District shall comply with the most current version of the *Map and Drawing Standards for the Los Angeles District Regulatory Division* (available on the Los Angeles District Regulatory Division website at: www.spl.usace.army.mil/missions/regulatory/); and

   c. Numbered and dated pre-project color photographs showing a representative sample of waters proposed to be impacted on the project site, and all waters proposed to be avoided on and immediately adjacent to the project site. The compass angle and position of each photograph shall be documented on the plan-view drawing required in subpart b of this regional condition.

4. Submission of a PCN pursuant to General Condition 31 and Regional Condition 3 shall be required for all regulated activities in the following locations:
   a. All perennial waterbodies and special aquatic sites within the State of Arizona and within the Mojave and Sonoran (Colorado) desert regions of California, excluding the Colorado River in Arizona from Davis Dam to River Mile 261 (northern boundary of the Fort Mojave Indian Tribe Reservation). The desert region in California is limited to four USGS HUC accounting units (Lower Colorado -150301, Northern Mojave-180902, Southern Mojave-181001, and Salton Sea-181002).
   b. All areas designated as Essential Fish Habitat (EFH) by the Pacific Fishery Management Council (i.e., all tidally influenced areas - Federal Register dated March 12, 2007 (72 FR 11092)), in which case the PCN shall include an EFH assessment and extent of proposed impacts to EFH. Examples of EFH habitat assessments can be found at: http://www.swr.noaa.gov/efh.htm.
   c. All watersheds in the Santa Monica Mountains in Los Angeles and Ventura counties bounded by Calleguas Creek on the west, by Highway 101 on the north and east, and by Sunset Boulevard and Pacific Ocean on the south.
   d. The Santa Clara River watershed in Los Angeles and Ventura counties, including but not limited to

Aliso Canyon, Agua Dulce Canyon, Sand Canyon, Bouquet Canyon, Mint Canyon, South Fork of the Santa Clara River, San Francisquito Canyon, Castaic Creek, Piru Creek, Sespe Creek and the main-stem of the Santa Clara River.

5. Individual Permits shall be required for all discharges of fill material in jurisdictional vernal pools, with the exception that discharges for the purpose of restoration, enhancement, management or scientific study of vernal pools may be authorized under NWPs 5, 6, and 27 with the submission of a PCN in accordance with General Condition 31 and Regional Condition 3.

6. Individual Permits shall be required in Murrieta Creek and Temecula Creek watersheds in Riverside County for new permanent fills in perennial and intermittent watercourses otherwise authorized under NWPs 29, 39, 42 and 43, and in ephemeral watercourses for these NWPs for projects that impact greater than 0.1 acre of waters of the United States. In addition, when NWP 14 is used in conjunction with residential, commercial, or industrial developments the 0.1 acre limit would also apply.

7. Individual Permits (Standard Individual Permit or 404 Letter of Permission) shall be required in San Luis Obispo Creek and Santa Rosa Creek in San Luis Obispo County for bank stabilization projects, and in Gaviota Creek, Mission Creek and Carpinteria Creek in Santa Barbara County for bank stabilization projects and grade control structures.

8. In conjunction with the Los Angeles District's Special Area Management Plans (SAMPs) for the San Diego Creek Watershed and San Juan Creek/Western San Mateo Creek Watersheds in Orange County, California, the Corps' Division Engineer, through his discretionary authority has revoked the use of the following 26 selected NWPs within these SAMP watersheds: 03, 07, 12, 13, 14, 16, 17, 18, 19, 21, 25, 27, 29, 31, 33, 39, 40, 41, 42, 43, 44, 46, 49, and 50. Consequently, these NWPs are no longer available in those watersheds to authorize impacts to waters of the United States from discharges of dredged or fill material under the Corps' Clean Water Act section 404 authority.

9. Any requests to waive the 300 linear foot limitation for intermittent and ephemeral streams for NWPs 29, 39, 40 and 42, 43, 44, 51 and 52 or to waive the 500 linear foot limitation along the bank for NWP 13, must include the following:
   a. A narrative description of the stream. This should include known information on: volume and duration of flow; the approximate length, width, and depth of the waterbody and characters observed associated with an Ordinary High Water Mark (e.g. bed and bank, wrack line, or scour marks); a description of the adjacent vegetation community and a statement regarding the wetland status of the associated vegetation community (i.e. wetland, non-wetland); surrounding land use; water quality; issues related to cumulative impacts in the watershed, and; any other relevant information.
   b. An analysis of the proposed impacts to the waterbody in accordance with General Condition 31 and Regional Condition 3;
   c. Measures taken to avoid and minimize losses, including other methods of constructing the proposed project; and
   d. A compensatory mitigation plan describing how the unavoidable losses are proposed to be compensated, in accordance with 33 CFR Part 332.

10. The permittee shall complete the construction of any compensatory mitigation required by special condition(s) of the NWP verification before or concurrent with commencement of construction of the

authorized activity, except when specifically determined to be impracticable by the Corps. When mitigation involves use of a mitigation bank or in-lieu fee program, the permittee shall submit proof of payment to the Corps prior to commencement of construction of the authorized activity.

4. Further information:

1. Congressional Authorities: You have been authorized to undertake the activity described above pursuant to:
   ( ) Section 10 of the Rivers and Harbors Act of 1899 (33 U.S.C. 403).
   (x) Section 404 of the Clean Water Act (33 U.S.C. 1344).
   ( ) Section 103 of the Marine Protection, Research and Sanctuaries Act of 1972 (33 U.S.C. 1413).

2. Limits of this authorization.
   (a) This permit does not obviate the need to obtain other Federal, state, or local authorizations required by law.
   (b) This permit does not grant any property rights or exclusive privileges.
   (c) This permit does not authorize any injury to the property or rights of others.
   (d) This permit does not authorize interference with any existing or proposed Federal project.

3. Limits of Federal Liability. In issuing this permit, the Federal Government does not assume any liability for the following:
   (a) Damages to the permitted project or uses thereof as a result of other permitted or unpermitted activities or from natural causes.
   (b) Damages to the permitted project or uses thereof as a result of current or future activities undertaken by or on behalf of the United States in the public interest.
   (c) Damages to persons, property, or to other permitted or unpermitted activities or structures caused by the activity authorized by this permit.
   (d) Design or construction deficiencies associated with the permitted work.
   (e) Damage claims associated with any future modification, suspension, or revocation of this permit.

4. Reliance on Applicant's Data: The determination of this office that issuance of this permit is not contrary to the public interest was made in reliance on the information you provided.

5. Reevaluation of Permit Decision. This office may reevaluate its decision on this permit at any time the circumstances warrant. Circumstances that could require a reevaluation include, but are not limited to, the following:
   (a) You fail to comply with the terms and conditions of this permit.
   (b) The information provided by you in support of your permit application proves to have been false, incomplete, or inaccurate (See 4 above).
   (c) Significant new information surfaces which this office did not consider in reaching the original public interest decision.

   Such a reevaluation may result in a determination that it is appropriate to use the suspension, modification, and revocation procedures contained in 33 CFR 330.5 or enforcement procedures such as those contained in 33 CFR 326.4 and 326.5. The referenced enforcement procedures provide for the issuance of an administrative order requiring you to comply with the terms and conditions of your permit and for the initiation of legal action where appropriate. You will be required to pay for any corrective measure ordered by this office, and if you fail to comply with such directive, this office may

in certain situations (such as those specified in 33 CFR 209.170) accomplish the corrective measures by contract or otherwise and bill you for the cost.

6. This letter of verification is valid for a period not to exceed two years unless the nationwide permit is modified, reissued, revoked, or expires before that time.

7. You must maintain the activity authorized by this permit in good condition and in conformance with the terms and conditions of this permit. You are not relieved of this requirement if you abandon the permitted activity, although you may make a good faith transfer to a third party in compliance with General Condition H below. Should you wish to cease to maintain the authorized activity or should you desire to abandon it without a good faith transfer, you must obtain a modification of this permit from this office, which may require restoration of the area.

8. You must allow representatives from this office to inspect the authorized activity at any time deemed necessary to ensure that it is being or has been accomplished with the terms and conditions of your permit.

PAGE LEFT BLANK INTENTIONALLY

APPENDIX D

DWR ENCROACHMENT PERMIT

PAGE LEFT BLANK INTENTIONALLY

ENCROACHMENT PERMIT

TO: County of San Luis Obispo
PERMITTEE

ATTN: Ms. Cori Marsalek
County of San Luis Obispo
Public Works Department
County Government Center Room 27
San Luis Obispo, California 93408

PHONE: (805) 781-4995

PERMIT NO.: 1599	
DIVISION: Coastal	Milepost: 89.48
COUNTY: San Luis Obispo	Right of Way Map No.: none
FIELD DIVISION: San Joaquin	
PARCEL(S): COA-637	

In compliance with your application dated 1/28/2014, and subject to the following, PERMISSION IS HEREBY GRANTED by the Department of Water Resources, **STATE**, for:

County of San Luis Obispo's (SLO) to construct a temporary crossing over the State Water Project (SWP), Coastal Aqueduct Pipeline's right of way (ROW), located near Branch Mill Road, east of Arroyo Grande, San Luis Obispo County. The proposed temporary crossing will provide SLO access over SWP's ROW for emergency vehicles, farm equipment, and construction equipment as the existing structurally-deficient Tar Spring Creek Bridge along Branch Mill Road is replaced.

As shown on and constructed pursuant to the following described plan drawings, which are attached to and made a part of this Encroachment Permit:

- Quincy Engineering, Construction Details Sheets No. C-2, C-3, C-4, dated 6/13/2013 (3 sheets).
- Quincy Engineering's Tar Spring Creek Bridge on Branch Mill Road Construction Detail. Drawing, stamped and signed, dated July 21, 2014 (1 sheet).
- San Luis Obispo County Water Transmission Line, Design Check, dated 7/16/2014
- Mabey Universal Super Panel Bridge Design Data, Publication Reference MBSI MU04-01, no date.

NOTICE PRIOR TO STARTING WORK: In accordance with standard provisions, provide notice at least 7 days prior to starting work to:

Angelica Aguilar, Senior Land Agent
Department of Water Resources
Division of Engineering
Real Estate Branch
(800) 600-4397

and Central Coastal
Water Authority
(805) 697-5235

and San Joaquin Field
Division (661) 858-5513

and Sacramento Project Headquarters
(916) 376-9899

CERTIFICATE OF INSURANCE (See Standard Provision No. 4):

☐ Is not required ☒ Is required ☐ During construction ☐ Continuously until permit is canceled or revoked

THE FOLLOWING ATTACHMENTS ARE INCLUDED AS PART OF THIS PERMIT: (Check applicable)

☒ Yes ☐ No Permit drawings listed above
☒ Yes ☐ No Special Provisions (DWR 33B)
☒ Yes ☐ No Standard Provisions (DWR 33C)

State issued environmental clearance for the permitted work on 8/28/2014. This clearance does not alleviate Permittee's responsibilities relative to any environmental law. It is Permittee's legal responsibility to have all environmental permits/ approval required to complete the project *prior to the initiation of construction*. Failure to comply with the requirements of CEQA, the State or federal Endangered Species Act, or any regulatory agency will void this clearance.
Environmental clearance expires one year from date of issue. Permittee shall request an extension of this environmental clearance from State sixty (60) days prior to the expiration date if permitted work will not be completed by the expiration date.
This permit is void unless the work is commenced before 8/29/2015.
This permit is to be strictly construed and no other work other than specifically mentioned is hereby authorized.

Accepted:

Permittee: County of San Luis Obispo, Public Works Department

By: _____
Cori Marsalek, Project Manager

Date: _____

Approved: State of California
Department of Water Resources

_____
Jeanne M. Kuttel, Chief
Division of Engineering

Issued Date: _____

SPECIAL PROVISIONS

Encroachment Permit 1599

1. An inspector from DWR and CCWA shall be present during construction activities within DWR's right of way.

STANDARD PROVISIONS

1. Specific Purpose: This Encroachment Permit is to be strictly construed and no work, other than that specifically described herein, is authorized. Any reconstruction of, or additions or extensions to the permitted facility require an Encroachment Permit from State for such reconstruction of, or additions or extensions to the permitted facility.

2. Acceptance of Provisions: Permittee understands and agrees to acceptance of the provisions and all attachments to this Encroachment Permit, for any work to be performed under this Encroachment Permit.

3. Liability for Damages: The State of California and all officers and employees thereof shall not be answerable or accountable in any manner for injury to or death of any person, including but not limited to Permittee, persons employed by Permittee, or for damage to property from any cause. Permittee is responsible for all liability for personal injury or property damage which may arise out of work herein permitted including its operation, maintenance and use, or which may arise out of failure on Permittee's part to perform its obligations under this Encroachment Permit. In the event any claim of such liability is made against the State of California, or any department, officer or employee thereof, Permittee shall defend, indemnify and hold each of them harmless from such claims, suits or actions of every name, kind and description brought for or on account of injuries to or death of any person, including but not limited to Permittee, persons employed by Permittee, persons acting in behalf of Permittee and the public, or damage to property resulting from the performance of work, use of permitted facilities, or other activity under the Encroachment Permit, or arising out of the failure on Permittee's part to perform its obligations under any permit in respect to maintenance or any other obligations, or resulting from defects or obstructions, or from any cause whatsoever during the progress of the work, or other activity or at any subsequent time work or other activity is being performed under the obligations provided by and contemplated by the Encroachment Permit, except as otherwise provided by statute. The duty of Permittee to indemnify and save harmless includes the duties to defend as set forth in Section 2778 of the Civil Code. Permittee waives any and all rights to any type of expressed or implied indemnity against the State, its officers, employees, and State contractors. It is the intent of the parties that Permittee will indemnify and hold harmless the State, its officers, employees, and State contractors, from any and all claims, suits or actions as set forth above regardless of the existence of degree of fault or negligence, whether active or passive, primary or secondary, on the part of State, Permittee, persons employed by Permittee, or acting on behalf of Permittee.

   For purposes of this Section, "State contractors" shall include contractors and their subcontractors under contract to the State of California performing work within the limits of this Encroachment Permit.

4. Insurance: If required, Permittee shall furnish to State a Certificate of Insurance, at the time the Encroachment Permit is signed and returned by Permittee, stating that there is liability insurance presently in effect for Permittee with bodily injury and property damage limits of not less than $1,000,000 per occurrence. The Certificate of Insurance will provide:

   a. That the insurer will not cancel the insured's coverage without 30 days' prior written notice to State.

   b. That State, its officers, agents, employees and servants are included as additional insureds, but only insofar as the operations under this Encroachment Permit are concerned.

   c. That State will not be responsible for any premiums or assessments on the policy.

   d. That all work under this Encroachment Permit (referenced by Encroachment Permit number) is covered by the policy.

   Permittee agrees that the bodily injury liability insurance herein provided for shall be in effect at all times during the period indicated on the cover sheet of this Encroachment Permit. In the event said insurance coverage expires at any time or times during the required period, Permittee agrees to provide at least thirty (30) days prior to said expiration date, a new Certificate of Insurance evidencing insurance coverage as provided for herein for not less than the remainder of the term of the required period, or for a period of not less than one (1) year. In the event Permittee fails to keep in effect at all times insurance coverage as herein provided, State may, in addition to any other remedies it may have, terminate this Encroachment Permit upon the occurrence of such event.

5. Damage and Water Contamination Avoidance Warranty: Permittee shall exercise reasonable diligence and precaution in the construction, installation, maintenance and use of structures, appurtenances, equipment, and tools on the lands of State to avoid damage or injury to the right of way, facilities, or personnel of State and the public and to preclude interference with operations of State. No material capable of water pollution shall be stored or discharged by Permittee within the drainage areas or waters of State's facilities. Permittee shall use all diligence and caution to prevent contamination or pollution of the waters of the State aqueduct system.

6. Damage Repairs: Permittee will be liable for any damage to State's facilities as a result of the proposed construction and for any other damages, including power, irrigation, municipal and industrial water supply, and communication losses. If Permittee damages, injures or disturbs State's right of way or facilities, State may elect to do its own repairs. Repairs to any of Permittee's facilities covered by this Encroachment Permit which State considers necessary to prevent damage or nuisance to State's facilities may be done by State at Permittee's expense if Permittee fails to make such repairs within 10 days after receiving written notice to do so. In either case, all expenses of such repair including State's administrative costs shall be borne by Permittee, State may require a deposit sufficient to pay the estimated repair cost, and Permittee agrees by acceptance of this Encroachment Permit to furnish such a deposit upon request.

7. Conflicting Encroachments: Permittee shall yield start of work to ongoing prior authorized work. When existing encroachments or installations may conflict with permitted facilities or work, Permittee is responsible for identifying and protecting said encroachments or installations unless other disposition has been authorized by the owning and operating entities.

8. Notice Prior to Starting Work: Before starting work Permittee shall notify State by contacting State's representative as shown on this Encroachment Permit's cover page, form DWR 33A, hereafter referred to as State's representative, and any other departmental employees designated. Such notice shall be given at least seven (7) days in advance of the date the work is to begin.

9. Keep Permit on the Work Site: During any period when any work is being pursued, this Encroachment Permit or a copy of the signed Encroachment Permit and the plans bearing the original DWR stamp with signature and date of DWR staff shall be kept at the site of the work and must be shown to any representative of State or any law enforcement officer on demand. It is a violation of Encroachment Permit conditions and work shall be suspended if the Encroachment Permit Package is not kept and available at the work site.

10. Permits From Other Agencies: This Encroachment Permit shall not obviate the need for any and all permits or approval required by law, whether from the Public Utilities Commission of the State of California (PUC), California Department of Fish and Game, California Occupational Safety and Health Administration (CAL-OSHA), or any other public agency having jurisdiction.

11. Public Safety: Permittee shall furnish, erect and maintain such fences, barriers, lights and signs and provide such flagmen and guards as are necessary to give adequate warning to the public of the construction of the encroachment and of any dangerous condition to be encountered as a result thereof.

12. Access Gates and Fencing: Alteration of State's fencing is permitted only as specifically described in this Encroachment Permit or as directed by State's Representative. All gates installed in State's right of way fencing as a means of access to Permittee's encroachment shall be constructed of materials and to standards at least equal to those of the existing fence. Before cutting the fence, Permittee shall install braces and additional posts, if necessary, on each side of the gate opening and shall anchor the fence to maintain tension in the wires. Such gates shall be kept in good repair by Permittee. Gates shall be kept closed and locked except when in actual use. State will at all times be allowed full use of said gates and, at the request of State's representative, will be allowed to place its locks in the chains securing the gates.

13. Hazardous Substances: Permittee agrees that it will comply with all laws, including Federal, State, or local, existing during the term of this Encroachment Permit pertaining to the use, storage, transportation and disposal of any hazardous substance as that term is defined in such applicable laws. In the event State or any other State agencies, officials, employees, agents or successors should incur any liability, cost or expense, including attorneys' fees and costs, as a result of Permittee's use, storage, transportation or disposal of any hazardous substance, including any

petroleum derivative, Permittee shall indemnify, defend and hold harmless any of these entities or individuals against such liability. Where Permittee is found to be in breach of this provision due, for example, to the issuance of a government order directing Permittee to cease and desist any illegal action in connection with a hazardous substance, or to remediate a contaminated condition caused by Permittee or any person acting under Permittee's direction, control and authority, Permittee shall be responsible for all costs and expenses of complying with such order including any and all expenses imposed on or incurred by State in connection with or in response to such government order.

14. Public Utilities Commission Orders: All clearances and types of construction shall be in accordance with the applicable orders of the Public Utilities Commission of the State of California, unless otherwise modified herein or unless more restrictive provisions are required by County Ordinance.

15. Maintenance: Permittee shall operate and maintain properly any encroachment on State's right of way, make certain any encroachment is not damaging State's right of way or facilities, and immediately repair and make good any injury to any of State's improvements which occur as a result of the work done under this Encroachment Permit, including any and all injury to State's facilities which would not have occurred had such work not been done or such encroachment not been placed therein.

16. Notice to State for Maintenance: Permittee will notify State's representative before entering State's right of way to do maintenance work. When entry is required for routine inspection maintenance activities, adequate notice may be a telephone call or a formal written communication at the discretion of State's representative. Permittee may enter without notice for emergency repair or maintenance purposes, but shall notify State's representative within 24 hours of entry. Maintenance requiring alteration of Permittee's facilities, tunneling or excavation requires State's prior written approval.

17. Clean Up Right of Way: All trash, including waste food, must be removed from the work site at the end of the work day/night. Upon completion of the work, or maintenance or removal thereof, all waste material and debris shall be entirely removed from the work site and the site left in as presentable a condition as before the work started. All chemical spills must be cleaned up immediately and reported as soon as possible.

18. Archaeological: Should any archaeological resources be revealed in State's right of way Permittee is responsible for notifying State's Representative immediately, ceasing work and retaining a qualified archaeologist who shall evaluate the archaeological site and make recommendations to State's representative regarding the continuance of work.

19. Facilities Subject to Damage, Destruction, and Removal Without Compensation: The facilities or structures installed under this Encroachment Permit are subject to interruption, damage, destruction or removal at any time by State without compensation or liability in exercising any and all State's property rights or otherwise responding to public needs, and shall be subsequently reconstructed or restored at Permittee's expense. Permittee agrees to reimburse State for all extra costs of work performed to remove, dismantle, or destroy facilities or structures interfering with the exercise of State's rights. This Encroachment Permit grants no rights or warranty as to the availability or suitability of the land or State's rights therein for the facilities installed under this Encroachment Permit.

20. Supervision of State: All the work shall be done subject to the supervision of, and to the satisfaction of State, however, neither the supervision nor lack of supervision of the work by State will relieve Permittee of any obligations under the provision above entitled "Liability for Damage." State may, but is not required to, inspect any work performed under this Encroachment Permit. Equipment and Material storage in State right of way shall be at the direction of State's Field Division personnel.

21. Reimbursement of Costs: Permittee shall pay State for all reasonable time spent in reviewing plans, testing, issuing Encroachment Permits, inspecting Permittee's work performed in, along, under or near State's right of way, or ensuring compliance of the terms and conditions of this Encroachment Permit. On work which requires the presence of an employee of State as inspector, the salary, traveling and per diem expenses and other incidental expense of such inspection during the work shall be paid by Permittee upon presentation of a bill therefore.

22. Cost of Work: Unless stated in the Encroachment Permit, or separate written agreement, all costs incurred for work within State's rights of way pursuant to this Encroachment Permit shall be borne entirely by Permittee. Permittee hereby waives all claims for indemnification or contribution from State for any such work.

23. Submit As-Built Plans: Upon completion of all work within State's right of way, including any future construction or reconstruction, Permittee shall furnish reproducible as-built drawings to State's representative showing location and details of construction. Failure to submit as-built plans within sixty (60) days of completion may result in written notice of revocation as provided for under Provision 25 of this Encroachment Permit.

24. Future Moving of Installations: Permittee shall, on receipt of notice to do so and within 90 days unless otherwise approved by State, alter or remove at the sole expense of Permittee any property or structures covered by this Encroachment Permit, to such extent as may be necessary to avoid or eliminate interference with any facilities or structures now constructed or to be constructed by State, or with any operations of State, or with any use by State of the land affected hereby. Should Permittee fail to alter or remove the property or structures covered by this Encroachment Permit, and restore State's right of way and facilities to their condition prior to issuance of this Encroachment Permit, State will perform such work or have the work performed, and Permittee agrees to reimburse State for all costs of the work so performed including attorney's fees.

25. Termination, Revocation and Modification of Permit: This Encroachment Permit shall be revocable by State upon ten days' written notice to Permittee unless otherwise stated on the Encroachment Permit, and except as provided by law for public corporations, franchise holders, and utilities. Permittee's joint use agreements, franchise rights, reserved rights, or any other agreements for operating purposes in rights of way are an exception to this revocation. In the event that Permittee abandons the use of said facilities for a period of one year, or fails, neglects or refuses to comply with any of the conditions herein contained, or in the event that this Encroachment Permit is revoked, all rights of Permittee hereunder shall cease and terminate. Encroachment Permit provisions are subject to modification or abrogation at any time.

    Upon abandonment or termination, or if required by Encroachment Permit modification, Permittee shall remove all facilities installed pursuant to this Encroachment Permit, or make any alterations required by Encroachment Permit modification, and restore right of way to the condition prior to installation of facilities pursuant to this Encroachment Permit. All work to remove, alter, secure or restore required in this section shall be completed as soon as possible and at the sole expense of Permittee.

26. Future Construction or Reconstruction: Plans for any future construction or reconstruction within the permitted area shall be submitted to the State Department of Water Resources for review and approval of the affect of the construction or reconstruction on Permittee's facilities. Such approval may be withheld for any reason.

27. No Precedent Established: This Encroachment Permit is issued with the understanding that it does not establish a precedent.

28. Captions: This Encroachment Permit shall be construed as a whole and, in accordance with its fair meaning, the captions being for the convenience of the parties only, and not intended to describe or define the provisions in the portions of the Encroachment Permit to which they pertain.

29. Permits for Record Purposes Only: When work in rights of way is within an area under a Joint Use Agreement (JUA) or a Consent to Common Use Agreement (CCUA), this Encroachment Permit will be issued to Permittee for the purpose of providing a notice and record of work. All prior rights of Encroachment Permittee shall be preserved, no new or different rights or obligations are intended to be created.

30. Assignments Not Permitted: No right or interest included in said Encroachment Permit shall pass by assignment by Permittee without written permission from State, except upon dedication and/or acceptance for operation and maintenance by a public utility or municipality. No party other than Permittee or Permittee's authorized agent is allowed to work under this Encroachment Permit.

31. No Third Party Beneficiaries: This Encroachment Permit is made solely for the benefit of Permittee and is not made for the benefit of any person, firm, association, corporation or public entity not a party hereto, and no person, firm, association, corporation or public entity other than Permittee shall have any right to enforce this Encroachment Permit under California Civil Code Section 1559 or otherwise.

APPENDIX E

RULES GOVERNING BID PROTESTS AND OTHER CHALLENGES TO AWARDS OF CONSTRUCTION CONTRACTS

PAGE LEFT BLANK INTENTIONALLY

COUNTY OF SAN LUIS OBISPO

Rules Governing Bid Protests And Other Challenges to Awards of Construction Contracts

The requirements set forth in these "Rules Governing Bid Protests And Other Challenges to Awards of Construction Contracts" ("Rules") are mandatory and are a Bidder's sole and exclusive remedy in the event a Bidder desires to challenge, protest or contest the award of any Construction Contract. A Bidder's failure to comply with these requirements shall constitute a waiver of any right to challenge, protest or contest the award of a Construction Contract in any subsequent proceeding, including but not limited to, the filing of a court action.

A Bidder may not rely upon another Bidder's compliance with the requirements of these Rules. Any Bidder that does not independently comply with the requirements set forth herein shall be deemed to have waived any right to challenge, protest or contest the award of a Construction Contract.

Nothing in these Rules affects the right of the County to reject all bids at any time prior to the award of a Construction Contract.

1.1 Definitions

1.1.1 Bidder - The contractor submitting a bid in response to a County solicitation for bids on a Construction Contract.

1.1.2 Protestor - A Bidder who files a Protest in accordance with the provisions of these Rules.

1.1.3 Board – Board of Supervisors of the County of San Luis Obispo (hereinafter, also "County")

1.1.4 Construction Contract - Any Construction Contract which is formally or informally advertised for bids in which the County of San Luis Obispo is, or will be, a party.

1.1.5 Protest – Any challenge, objection, or protest to the award of a Construction Contract to any Bidder.

1.1.6 Response – Any response to a Protest that is filed by an Interested Party in accordance with the provisions of these Rules.

1.1.7 Responsible Department - The County department, agency, or office responsible for the preparation of the bid documents for the Construction Contract and the administration of the Construction Contract.

1.1.8 Department Head - The person designated by the Board to be the head of the Responsible Department, or that person designated by the Department

Head to assume the powers, duties, and responsibilities conferred upon the Department Head under these Rules.

1.1.9 Initial Determination – A written notice by the Department Head that notifies a Bidder of the reasons why the Department Head believes that a bid is nonresponsive, or that a Bidder is not a responsible Bidder.

1.1.10 Interested Parties - For the purpose of these Rules, Interested Parties are defined as:

1.1.10.1 The Responsible Department and/or its Department Head.

1.1.10.2 Any Bidder that filed a Protest or whose bid is the subject of an Initial Determination.

1.1.10.3 Any Bidder whose eligibility for having the Construction Contract awarded to it as a responsible Bidder with the lowest responsive bid would be affected by the outcome of a Protest or Initial Determination.

1.2 <u>Department Head's Independent Authority to Determine Bid Responsiveness and Bidder Responsibility.</u>

1.2.1 Regardless of whether a Protest is submitted under these Rules, the Department Head is authorized to determine whether any bid is a responsive bid and whether any Bidder is a responsible Bidder. In the event the Department Head issues an Initial Determination, the Department Head shall provide the Interested Parties with written notice of the Initial Determination at least five (5) business days before the Department Head renders a final decision addressing the grounds stated in the Initial Determination A final decision of the Department Head under this section 1.2 shall be the final decision of the County with no provision for reconsideration or appeal to the Board.

1.2.2 The Department Head need not issue an Initial Determination in order to make a final decision on whether a bid is a responsive bid or a Bidder is a responsible Bidder. A final decision can also be issued by the Department Head through the processing of a Protest pursuant to the procedures set forth in these Rules.

1.2.3 The Department Head reserves the right to amend or withdraw an Initial Determination at any time before the Department Head renders a final decision addressing the grounds stated in the Initial Determination. When an Initial Determination is withdrawn, it shall have the same effect as if the Initial Determination had never been made.

1.3 <u>Basis for Protest</u>

1.3.1 Grounds for Protest – The grounds for a Protest may include any grounds a Protestor may have for contesting or challenging the award of a Construction Contract to any Bidder, including but not limited to the following grounds:

1.3.1.1 A Protestor objects to a Construction Contract being awarded to another Bidder on the grounds that the other Bidder's bid is nonresponsive.

1.3.1.2 A Protestor objects to a Construction Contract being awarded to another Bidder on the grounds that the other Bidder is not a responsible Bidder.

1.3.1.3 A Protestor objects to a Construction Contract being awarded to the Protestor on the grounds that the Protestor made a mistake in its bid that entitles the Protestor to be relieved of its bid under Public Contract Code Sections 5100 et seq

1.3.1.4 A Protestor objects to a Department Head's Initial Determination issued under section 1.2.1 above.

1.3.2 Required Form of Protest - All Protests shall be made in writing, containing the information listed below, and shall be filed with the Department Head . Protests shall contain the following information:

1.3.2.1 The name, address, telephone, facsimile numbers, and email address of the Protestor.

1.3.2.2 The signature of the Protestor or its representative.

1.3.2.3 The bid, solicitation and/or contract number.

1.3.2.4 The Protest must contain a complete statement of all grounds for the Protest, and must refer to the specific portion of the bid documents that are the basis of the Protest. The Protest must set forth all supporting facts and documentation. If Protester believes there are some facts relevant to its Protest that Protester cannot adequately present in writing, Protester must describe such facts in its Protest under the heading "Facts Requiring Oral Presentation", and state therein the reasons why the Bid Protester believes it cannot adequately present those facts through documentation.

1.3.2.5 All information establishing that the Protestor is a Bidder for the purpose of filing a Protest.

1.3.2.6 The form of relief requested.

1.4 <u>Protest Requirements and Procedure</u>

1.4.1 Standing to Protest - Protests shall be filed only by a Bidder.

1.4.2 Time for Filing a Protest

1.4.2.1 Except as provided in sections 1.4.2.2 and 1.4.2.3 below, all Protests must be submitted in writing to the Department Head before 5 p.m. PST of the fifth (5) business day following the date upon which the bids on the Construction Contract were opened.

1.4.2.2 When a Protestor objects to a Construction Contract being awarded to the Protester on the grounds that the Protestor made a mistake in its bid that entitles the Protestor to be relieved of its bid under Public Contract Code Sections 5100 et seq, the Protest must be submitted in writing to the Department Head before 5 p.m. PST of the fifth (5) business day following the date upon

which the bids on the Construction Contract were opened pursuant to Public Contract Code Section 5103.

1.4.2.3 When the Protestor objects to an Initial Determination made by the Department Head under section 1.2.1 above, the Protest must be submitted in writing to the Department Head before 5 p.m. PST of the fifth (5) business day following the date upon which the Initial Determination was first delivered to Protestor (either electronically or otherwise).

1.4.3 Written Responses of Interested Parties - If any Interested Party desires to respond to the Protest, the Response must be submitted in writing to the Department Head within five (5) business days of the date the Protest was first delivered to the Interested Party (either electronically or otherwise). If an Interested Party believes there are some facts relevant to its Response that the Interested Party cannot adequately present in writing, the Interested Party must describe such facts in its Response under the heading "Facts Requiring Oral Presentation", and state therein the reasons why the Interested Party believes it cannot adequately present those facts through documentation.

1.4.4 Proof of Transmittal - All Protests, Responses, and Replies shall include documentation evidencing that all Interested Parties were concurrently sent a complete copy of the respective Protest, Response or Reply in a manner that would provide all Interested Parties with a complete copy of the respective Protest, Response or Reply no later than one (1) business day after it was sent to the Department Head. The means of transmission chosen must also provide the sending party a means of verifying the date and time the copy was received by each Interested Party. Transmission by email may be an acceptable means of transmittal.

1.4.5 No Ex Parte or Unilateral Communications on the Merits of a Protest - No Bidder shall have any written communications regarding the merits of a Protest with the Responsible Department or its Department Head that are not concurrently sent to all of the other Interested Parties. No Bidder shall have any oral communications regarding the merits of a Protest with the Responsible Department or its Department Head other than during an oral presentation properly noticed by the Department Head under these Rules.

1.4.6 Suspension of Process for Proposed Rejection of all Bids - At any time during the processing of a Protest, the Department Head may elect to indefinitely suspend any further processing of the Protest by providing written notice to all Interested Parties that the Department Head intends to recommend to the Board that all bids be rejected. All time deadlines provided in these Rules shall be tolled during any such suspension period. If the Board decides to not reject all bids, or if the Department Head otherwise decides to lift the suspension, the requirements of these Rules shall be reactivated upon the Department Head providing all Interested Parties with written notice thereof.

1.5 <u>Summary Dismissal of Protest</u>

The Department Head may summarily dismiss a protest, or specific protest allegations, at any time that the Department Head determines that the Protest is untimely, frivolous, or without merit; is not submitted in the required form of Protest, as set forth above in section 1.3.2., "Required Form of Protest;" or is submitted by a non-Bidder. In such cases, a notice of summary dismissal will be furnished to the Interested Parties. Such a summary dismissal shall be the final decision of the County with no provision for reconsideration or appeal to the Board.

1.6 Decision by the Department Head Based on Written Submissions Only

In reaching a decision on the merits of a Protest, the Department Head may consider relevant documentation submitted by the Protestor and any other Interested Party. If the Department Head wishes to have additional information submitted that was not included in the Protest or in any documentation from other Interested Parties, the Department Head may make a request specifying the information sought and time for submittal. Submissions of additional information that have not been specifically requested by the Department Head may not be considered at the Department Head's sole discretion. If the Department Head does not provide an opportunity for an oral presentation under section 1.7 below, the Department Head will issue a written decision without any oral presentation. . The Department Head's decision shall be the final decision of the County with no provision for reconsideration or appeal to the Board.

1.7 Decision by the Department Head Following Oral Presentation

1.7.1 The Department Head may, at his or her discretion, elect to provide an opportunity for the Protestor and other Interested Parties to make an oral presentation to the Department Head regarding the Protest. In such event. oral presentations shall be conducted in accordance with the following procedure:

1.7.1.1 Notice of Oral Presentation - The Department Head will set a date, time, and place for an oral presentation. Written notice will be sent to Interested Parties not less than five (5) business days in advance of the oral presentation unless it is agreeable to all parties that an earlier date be established. Continuances may be granted by the Department Head for good cause.

1.7.1.2 Guidelines for Oral Presentation - Oral presentations are informal in nature and shall be made by the Protestor or its authorized representative. Technical rules of evidence shall not apply. The Department Head will determine how the oral presentations will be conducted and may set time limits for the presentation. The Department Head may question Interested Parties or provide an opportunity for Interested Parties to make an oral presentation. The Department Head may request additional documentation or information prior to, during or after the oral presentation. Unless

requested by the Department Head, additional documentation or information may not be accepted.

1.7.1.3 Record of Oral Presentation - Any Interested Party may request, and in the Department Head's sole discretion, the Department Head may allow recording of the presentation. If the Department Head allows the presentation to be recorded, the Interested Party requesting that the presentation be recorded must pay the cost of recording, including the costs to make and distribute copies of the recording to the Department Head and other Interested Parties. There shall be no cost to the County.

1.7.1.4 Decisions - The Department Head will issue a written decision within 30 calendar days of the oral presentation; however, the time for issuing the written decision may be extended by the Department Head. A copy of the decision will be furnished to the Interested Parties. The decision shall be the final decision of the County with no provision for reconsideration or appeal to the Board.

1.8 Effect on Contracts

The failure of a County employee or department to comply with the provisions stated in these Rules shall in no way affect the validity of any Construction Contract entered into by the County.

1.9 Department Head Decisions on Protests Seeking Relief from a Bidder's Mistake under Public Contract Code Section 5103.

When a Protestor objects to a Construction Contract being awarded to the Bid Protester on the grounds that the Protestor made a mistake in its bid that entitles the Protestor to be relieved of its bid under Public Contract Code Sections 5100 et seq, a final decision of the Department Head that relieves the Protestor of its bid on the grounds of mistake must be approved by the Board before it can become a final decision of the County. Any other final decision of the Department Head regarding a Protestor's request to be relieved of its bid on the grounds of mistake under Public Contract Code Sections 5100 et seq, shall be the final decision of the County with no provision for reconsideration or appeal to the Board.

APPENDIX F

REVISED STANDARD PLANS

PAGE LEFT BLANK INTENTIONALLY

M

Maint	MAINTENANCE
Max	MAXIMUM
MB	METAL BEAM
MBB	METAL BEAM BARRIER
MBGR	METAL BEAM GUARD RAILING
Med	MEDIAN
MGS	MIDWEST GUARDRAIL SYSTEM
MH	MANHOLE
Min	MINIMUM
Misc	MISCELLANEOUS
Misc I & S	MISCELLANEOUS IRON AND STEEL
Mkr	MARKER
Mod	MODIFIED,
	MODIFY
Mon	MONUMENT
MP	METAL PLATE
MPGR	METAL PLATE GUARD RAILING
MR	MOVEMENT RATING
MSE	MECHANICALLY STABILIZED EMBANKMENT
Mt	MOUNTAIN, MOUNT
Mtl	MATERIAL
MVP	MAINTENANCE VEHICLE PULLOUT

N

N	NORTH
NB	NORTHBOUND
No.	NUMBER (MUST HAVE PERIOD)
Nos.	NUMBERS (MUST HAVE PERIOD)
NPS	NOMINAL PIPE SIZE
NS	NEAR SIDE
NSP	NEW STANDARD PLAN
NTS	NOT TO SCALE

O

Oblr	OBLITERATE
OC	OVERCROSSING
OD	OUTSIDE DIAMETER
OF	OUTSIDE FACE
OG	ORIGINAL GROUND
OGAC	OPEN GRADED ASPHALT CONCRETE
OGFC	OPEN GRADED FRICTION COURSE
OH	OVERHEAD
OHWM	ORDINARY HIGH WATER MARK
O-O	OUT TO OUT
Opp	OPPOSITE
OSD	OVERSIDE DRAIN

P

P	PAGE
PAP	PERFORATED ALUMINUM PIPE
PB	PULL BOX
PC	POINT OF CURVATURE,
	PRECAST
PCC	POINT OF COMPOUND CURVE,
	PORTLAND CEMENT CONCRETE
PCMS	PORTABLE CHANGEABLE MESSAGE SIGN
PCP	PERFORATED CONCRETE PIPE,
	PRESTRESSED CONCRETE PIPE
PCVC	POINT OF COMPOUND VERTICAL CURVE
PEC	PERMIT TO ENTER AND CONSTRUCT
Ped	PEDESTRIAN
Ped OC	PEDESTRIAN OVERCROSSING
Ped UC	PEDESTRIAN UNDERCROSSING
Perm Mtl	PERMEABLE MATERIAL

P continued

PG	PROFILE GRADE
PI	POINT OF INTERSECTION
PJP	PARTIAL JOINT PENETRATION
Pkwy	PARKWAY
Pl, PL	PLATE
P/L	PROPERTY LINE
PM	POST MILE,
	TIME FROM NOON TO MIDNIGHT
PN	PAVING NOTCH
POC	POINT OF HORIZONTAL CURVE
POT	POINT OF TANGENT
POVC	POINT OF VERTICAL CURVE
PP	PIPE PILE,
	PLASTIC PIPE,
	POWER POLE
PPL	PREFORMED PERMEABLE LINER
PPP	PERFORATED PLASTIC PIPE
PRC	POINT OF REVERSE CURVE
PRF	PAVEMENT REINFORCING FABRIC
PRVC	POINT OF REVERSE VERTICAL CURVE
PS&E	PLANS, SPECIFICATIONS AND ESTIMATES
PS, P/S	PRESTRESSED
PSP	PERFORATED STEEL PIPE
PT	POINT OF TANGENCY
PVC	POLYVINYL CHLORIDE
Pvmt	PAVEMENT

Q

Qty	QUANTITY

R

R	RADIUS
R & D	REMOVE AND DISPOSE
R & S	REMOVE AND SALVAGE
R/C	RATE OF CHANGE
RCA	REINFORCED CONCRETE ARCH
RCB	REINFORCED CONCRETE BOX
RCP	REINFORCED CONCRETE PIPE
RCPA	REINFORCED CONCRETE PIPE ARCH
Rd	ROAD
Reinf	REINFORCED,
	REINFORCEMENT,
	REINFORCING
Rel	RELOCATE
Repl	REPLACEMENT
Ret	RETAINING
Rev	REVISED, REVISION
Rdwy	ROADWAY
RHMA	RUBBERIZED HOT MIX ASPHALT
Riv	RIVER
RM	ROAD-MIXED
RP	RADIUS POINT,
	REFERENCE POINT
RR	RAILROAD
RSP	ROCK SLOPE PROTECTION,
	REVISED STANDARD PLAN
Rt	RIGHT
Rte	ROUTE
RW	REDWOOD,
	RETAINING WALL
R/W	RIGHT OF WAY
Rwy	RAILWAY

S

S	SOUTH,
	SUPPLEMENT
SAE	STRUCTURE APPROACH EMBANKMENT
Salv	SALVAGE
SAPP	STRUCTURAL ALUMINUM PLATE PIPE
SB	SOUTHBOUND
SC	SAND CUSHION
SCSP	SLOTTED CORRUGATED STEEL PIPE
SD	STORM DRAIN
Sec	SECOND,
	SECTION
Sep	SEPARATION
SG	SUBGRADE
Shld	SHOULDER
Sht	SHEET
Slm	SIMILAR
℄	STATION LINE
SM	SELECTED MATERIAL
Spec	SPECIAL,
	SPECIFICATIONS
SPP	SLOTTED PLASTIC PIPE
SS	SLOPE STAKE
SSBM	STRAP AND SADDLE BRACKET METHOD
SSD	STRUCTURAL SECTION DRAIN
SSPA	STRUCTURAL STEEL PLATE ARCH
SSPP	STRUCTURAL STEEL PLATE PIPE
SSPPA	STRUCTURAL STEEL PLATE PIPE ARCH
SSRP	STEEL SPIRAL RIB PIPE
St	STREET
Sta	STATION
STBB	SINGLE THRIE BEAM BARRIER
Std	STANDARD
Str	STRUCTURE
Surf	SURFACING
SW	SIDEWALK,
	SOUND WALL
Swr	SEWER
Sym	SYMMETRICAL
S4S	SURFACE 4 SIDES

T

T	SEMI-TANGENT
Tan	TANGENT
TBB	THRIE BEAM BARRIER
Tbr	TIMBER
TC	TOP OF CURB
TCB	TRAFFIC CONTROL BOX
TCE	TEMPORARY CONSTRUCTION EASEMENT
Tel	TELEPHONE
Temp	TEMPORARY
TG	TOP OF GRADE
Tot	TOTAL
TP	TELEPHONE POLE
TPB	TREATED PERMEABLE BASE
TPM	TREATED PERMEABLE MATERIAL
Trans	TRANSITION

T continued

TS	TRANSVERSE,
	TRAFFIC SIGNAL,
	TUBULAR STEEL
Typ	TYPICAL

U

UC	UNDERCROSSING
UD	UNDERDRAIN
UG	UNDERGROUND
UON	UNLESS OTHERWISE NOTED
UP	UNDERPASS

V

V	VALVE,
	DESIGN SPEED
Var	VARIABLE,
	VARIES
VC	VERTICAL CURVE
VCP	VITRIFIED CLAY PIPE
Vert	VERTICAL
Via	VIADUCT
Vol	VOLUME

W

W	WEST,
	WIDTH
WB	WESTBOUND
WH	WEEP HOLE
WM	WIRE MESH
WS	WATER SURFACE
WSP	WELDED STEEL PIPE
Wt	WEIGHT
WV	WATER VALVE
WW	WINGWALL
WWLOL	WINGWALL LAYOUT LINE

X

X Sec	CROSS SECTION
Xing	CROSSING

Y

Yr	YEAR
Yrs	YEARS

Dist	COUNTY	ROUTE	POST MILES TOTAL PROJECT	SHEET No.	TOTAL SHEETS

REGISTERED CIVIL ENGINEER

July 19, 2013
PLANS APPROVAL DATE

THE STATE OF CALIFORNIA OR ITS OFFICERS OR AGENTS SHALL NOT BE RESPONSIBLE FOR THE ACCURACY OR COMPLETENESS OF SCANNED COPIES OF THIS PLAN SHEET.

TO ACCOMPANY PLANS DATED _____

UNIT OF MEASUREMENT SYMBOLS:

Some of the symbols used in the project plan quantity tables and in the Bid Item List are:

TABLE A

SYMBOL USED	DEFINITIONS
ACRE	ACRE
CF	CUBIC FOOT
CY	CUBIC YARD
EA	EACH
GAL	GALLON
LB	POUND
LF	LINEAR FOOT
SQFT	SQUARE FOOT
SQYD	SQUARE YARD
STA	100 FEET
TAB	TABLET
TON	2,000 POUNDS

Some of the symbols used in the plans other than in the project plan quantity tables are:

TABLE B

SYMBOL USED	DEFINITIONS
ksi	KIPS PER SQUARE INCH
ksf	KIPS PER SQUARE FOOT
psi	POUNDS PER SQUARE INCH
psf	POUNDS PER SQUARE FOOT
lb/ft^3, pcf	POUNDS PER CUBIC FOOT
tsf	TONS PER SQUARE FOOT
mph, MPH *	MILES PER HOUR
ø	NOMINAL DIAMETER
oz	OUNCE
lb	POUND
kip	1,000 POUNDS
cal	CALORIE
ft	FOOT OR FEET
gal	GALLON

* For use on a sign panel only

STATE OF CALIFORNIA
DEPARTMENT OF TRANSPORTATION

ABBREVIATIONS (SHEET 2 OF 2)

NO SCALE

RSP A10B DATED JULY 19, 2013 SUPERSEDES STANDARD PLAN A10B DATED MAY 20, 2011 - PAGE 2 OF THE STANDARD PLANS BOOK DATED 2010.

REVISED STANDARD PLAN RSP A10B

2010 REVISED STANDARD PLAN RSP A10B

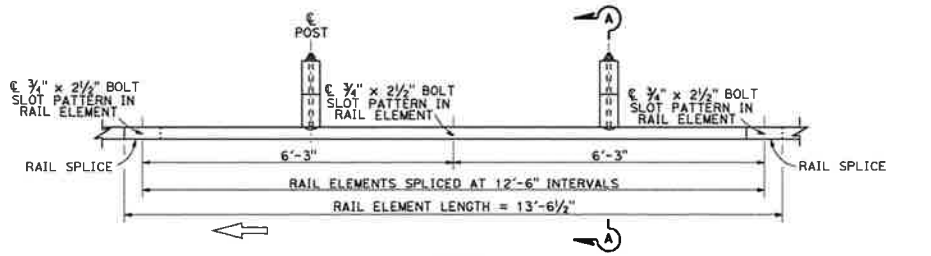

PLAN

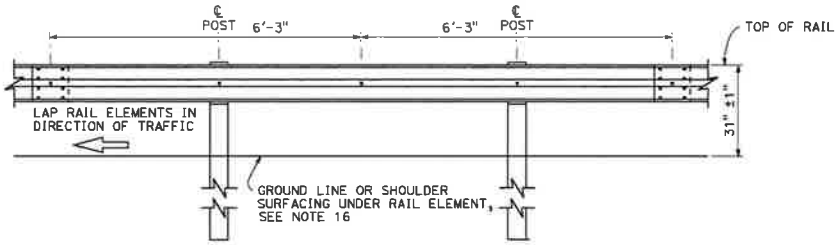

ELEVATION

MIDWEST GUARDRAIL SYSTEM WITH WOOD POST AND BLOCKS

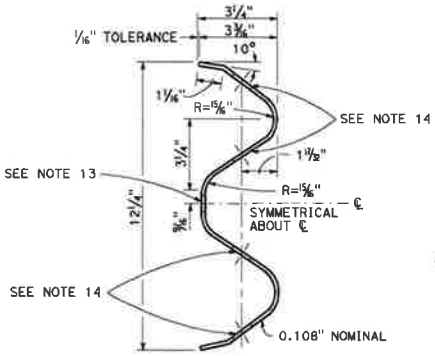

SECTION THRU RAIL ELEMENT

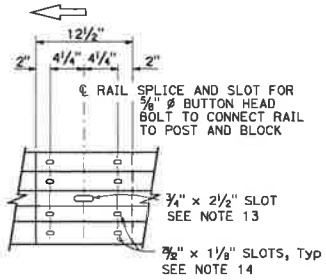

ELEVATION

RAIL ELEMENT SPLICE DETAIL

a) Connect the over lapped end of the rail elements with ⅝" ø x 1⅜" button head oval shoulder splice bolts inserted into the 29/32" x 1⅛" slots and bolted together with ⅝" ø recessed hex nuts. Recess of hex nut points toward rail element. A total of 8 bolts and nuts are to be used at each rail splice connection.

b) The ends of the rail elements are to be overlapped in the direction of traffic (see details).

c) Where end cap is to be attached to the end of a rail element, a total of 4 of the above described splice bolts and nuts are to be used.

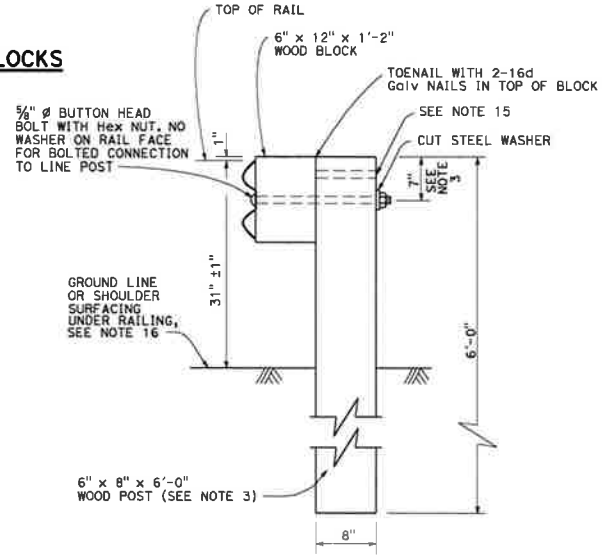

SECTION A-A

TYPICAL WOOD LINE POST INSTALLATION

See Note 4

Dist	COUNTY	ROUTE	POST MILES TOTAL PROJECT	SHEET No.	TOTAL SHEETS

Randell D. Hiatt
REGISTERED CIVIL ENGINEER

July 19, 2013
PLANS APPROVAL DATE

THE STATE OF CALIFORNIA OR ITS OFFICERS OR AGENTS SHALL NOT BE RESPONSIBLE FOR THE ACCURACY OR COMPLETENESS OF SCANNED COPIES OF THIS PLAN SHEET.

REGISTERED PROFESSIONAL ENGINEER Randell D. Hiatt No. C50200 Exp. 6-30-15 CIVIL STATE OF CALIFORNIA

TO ACCOMPANY PLANS DATED _____

NOTES:

1. For details of steel post installations, see Revised Standard Plan RSP A77L2.
2. For details of standard hardware used to construct MGS, see Revised Standard Plan RSP A77M1.
3. For details of wood posts and wood blocks used to construct MGS, see Revised Standard Plan RSP A77N1.
4. For additional installation details, see Revised Standard Plan RSP A77N3.
5. MGS post spacing to be 6'-3" center to center, except as otherwise noted.
6. For MGS typical layouts, see the A77P, A77Q and A77R Series of Standard Plans.
7. If railing is connected to terminal system end treatment, use 31" height terminal system end treatment.
8. For MGS end anchor details, see Revised Standard Plans RSP A77S1 and RSP A77T2.
9. For details of MGS transition to bridge railing, see Revised Standard Plan RSP A77U4.
10. For additional details of MSG connection to bridge railing, see Revised Standard Plans RSP A77U1, RSP A77U2 and RSP A77V1.
11. For MGS connection details to abutments and walls, see Revised Standard Plan RSP A77U3.
12. For typical MGS delineation and dike positioning details, see Revised Standard Plan RSP A77N4.
13. Slotted hole for bolted connection of rail element to block and post. See "Section Thru Rail Element".
14. Slotted holes for splice bolts to overlap ends of rail element. See "Section Thru Rail Element".
15. Additional hole in uppermost portion of line post is for potential future adjustments of railing height. See Revised Standard Plan RSP A77N1.
16. Install posts in soil.

STATE OF CALIFORNIA
DEPARTMENT OF TRANSPORTATION

MIDWEST GUARDRAIL SYSTEM STANDARD RAILING SECTION (WOOD POST WITH WOOD BLOCK)

NO SCALE

RSP A77L1 DATED JULY 19, 2013 SUPPLEMENTS STANDARD PLANS BOOK DATED 2010.

REVISED STANDARD PLAN RSP A77L1

2010 REVISED STANDARD PLAN RSP A77L1

DIST	COUNTY	ROUTE	POST MILES TOTAL PROJECT	SHEET No.	TOTAL SHEETS

Randell D. Hiatt
REGISTERED CIVIL ENGINEER

July 19, 2013
PLANS APPROVAL DATE

THE STATE OF CALIFORNIA OR ITS OFFICERS OR AGENTS SHALL NOT BE RESPONSIBLE FOR THE ACCURACY OR COMPLETENESS OF SCANNED COPIES OF THIS PLAN SHEET.

REGISTERED PROFESSIONAL ENGINEER
Randell D. Hiatt
No. C50200
Exp. 6-30-15
CIVIL
STATE OF CALIFORNIA

TO ACCOMPANY PLANS DATED _____

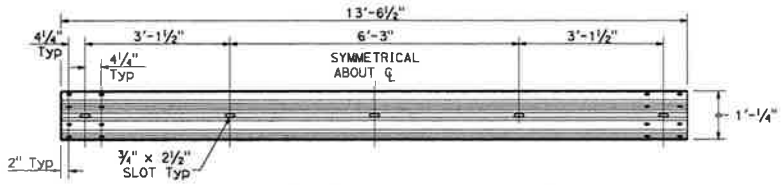

TYPICAL RAIL ELEMENT

NOTE:

1. Slotted holes for splice bolts to overlap ends of rail element.

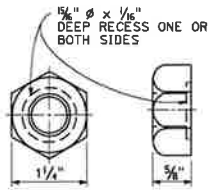

5/8" ø RECESS NUT

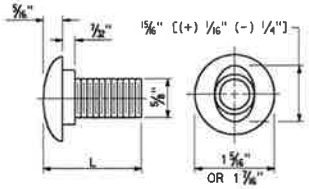

5/8" ø BUTTON HEAD BOLT

BUTTON HEAD BOLT

L	THREAD LENGTH
1⅜"	FULL THREAD LENGTH
2"	FULL THREAD LENGTH
10"	4" Min THREAD LENGTH
18"	4" Min THREAD LENGTH
20"	4" Min THREAD LENGTH
22"	4" Min THREAD LENGTH
26"	4" Min THREAD LENGTH
36"	4" Min THREAD LENGTH
** 2¾"	2" Min THREAD LENGTH
** 19"	4" Min THREAD LENGTH

** For nested rail applications.

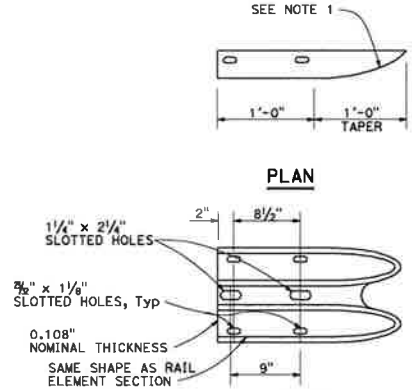

ELEVATION

END CAP (TYPE A)

STATE OF CALIFORNIA
DEPARTMENT OF TRANSPORTATION

MIDWEST GUARDRAIL SYSTEM STANDARD HARDWARE

NO SCALE

RSP A77M1 DATED JULY 19, 2013 SUPPLEMENTS THE STANDARD PLANS BOOK DATED 2010.

REVISED STANDARD PLAN RSP A77M1

2010 REVISED STANDARD PLAN RSP A77M1

Dist	COUNTY	ROUTE	POST MILES TOTAL PROJECT	SHEET No.	TOTAL SHEETS

Randell D. Hiatt
REGISTERED CIVIL ENGINEER

July 19, 2013
PLANS APPROVAL DATE

THE STATE OF CALIFORNIA OR ITS OFFICERS OR AGENTS SHALL NOT BE RESPONSIBLE FOR THE ACCURACY OR COMPLETENESS OF SCANNED COPIES OF THIS PLAN SHEET.

REGISTERED PROFESSIONAL ENGINEER Randell D. Hiatt No. C50200 Exp. 6-30-15 CIVIL STATE OF CALIFORNIA

TO ACCOMPANY PLANS DATED _____

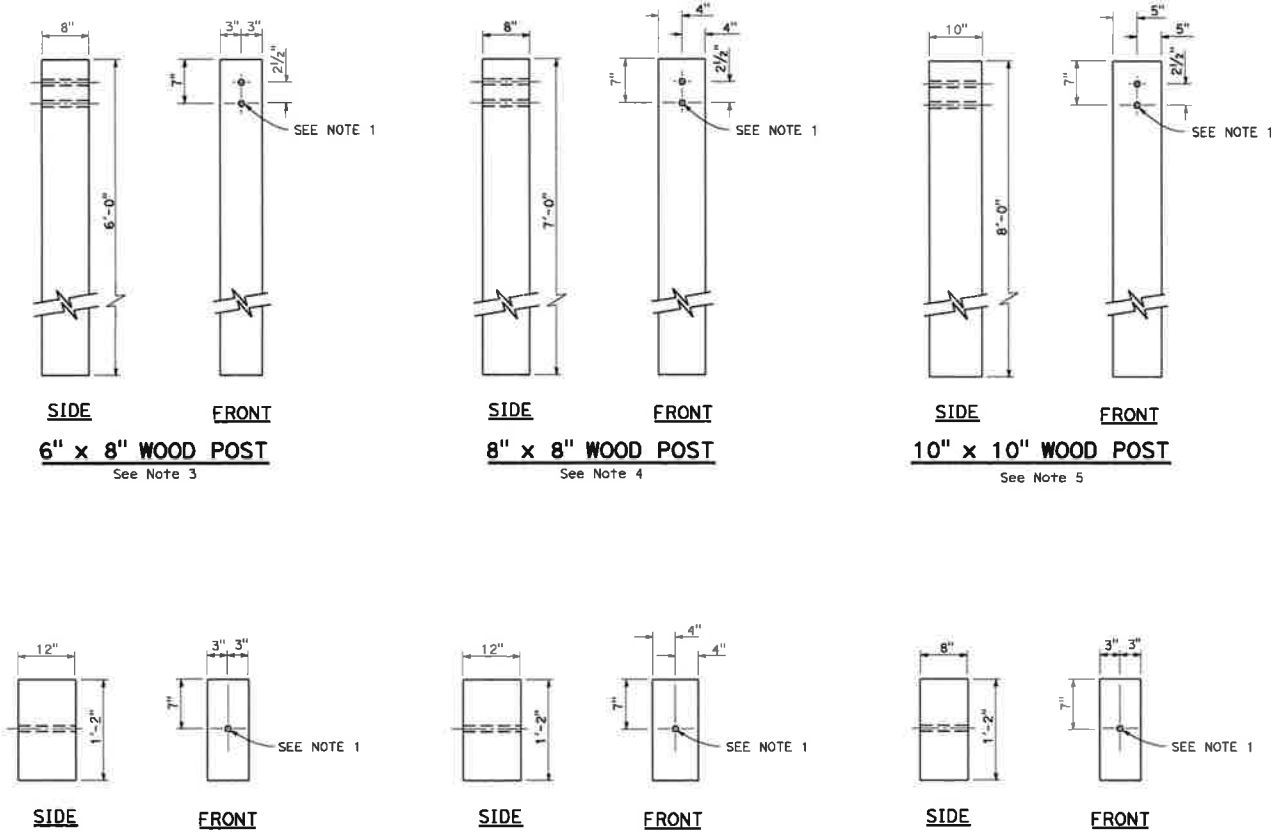

NOTES:

1. All holes in wood posts and blocks shall be ¾" Dia ± 1/16".
2. Dimensions shown for wood post are nominal.
3. This post and block combination used for standard line post sections of MGS.
4. This post and 8" x 12" block combination used for line post sections of MGS on narrow roadways.
5. This post and 8" x 12" block combination is typically used where strengthened line post sections of MGS are warranted to shield fixed objects.
6. See Revised Standard Plan RSP A77L3 for use of 6" x 8" and 8" x 8" wood blocks.

STATE OF CALIFORNIA
DEPARTMENT OF TRANSPORTATION

MIDWEST GUARDRAIL SYSTEM WOOD POST AND WOOD BLOCK DETAILS

NO SCALE

RSP A77N1 DATED JULY 19, 2013 SUPPLEMENTS THE STANDARD PLANS BOOK DATED 2010.

REVISED STANDARD PLAN RSP A77N1

2010 REVISED STANDARD RSP PLAN A77N1

DIST.	COUNTY	ROUTE	POST MILES TOTAL PROJECT	SHEET No.	TOTAL SHEETS

Randell D. Hiatt
REGISTERED CIVIL ENGINEER

July 19, 2013
PLANS APPROVAL DATE

Randell D. Hiatt
No. C50200
Exp. 6-30-15
CIVIL
STATE OF CALIFORNIA
REGISTERED PROFESSIONAL ENGINEER

THE STATE OF CALIFORNIA OR ITS OFFICERS OR AGENTS SHALL NOT BE RESPONSIBLE FOR THE ACCURACY OR COMPLETENESS OF SCANNED COPIES OF THIS PLAN SHEET.

TO ACCOMPANY PLANS DATED _____

NOTES:

1. When necessary to place dike more than 7" in front of face of MGS, only Type C dike may be used. For dike details, see Revised Standard Plan RSP A87B.
2. For standard railing post embedment, see Revised Standard Plan RSP A77N3.
3. MGS delineation to be used where shown on the Project Plans.
4. When dike or curb is placed under MGS, the maximum height of the dike or curb shall be 6". Mountable dike should not be used. For dike and curb details, see Revised Standard Plans RSP A87A and RSP A87B.
5. For details of typical distance between the face of rail and hinge point, see Revised Standard Plan RSP A77N3.
6. For steel line posts, use 1/4 - 20 self-tapping screws in 0.22" diameter holes or 1/4" bolts in 9/32" diameter holes.

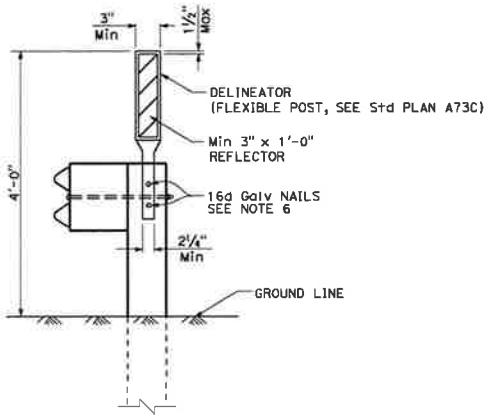

MGS DELINEATION
See Note 3

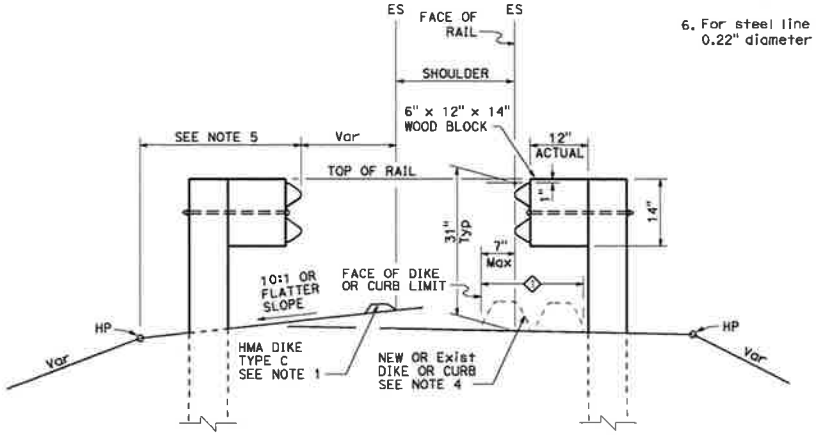

DIKE POSITIONING
See Note 1

◇ PERMISSIBLE DIKE OR CURB PLACEMENT AREA

STATE OF CALIFORNIA
DEPARTMENT OF TRANSPORTATION

MIDWEST GUARDRAIL SYSTEM TYPICAL RAILING DELINEATION AND DIKE POSITIONING DETAILS

NO SCALE

RSP A77N4 DATED JULY 19, 2013 SUPPLEMENTS THE STANDARD PLANS BOOK DATED 2010.

REVISED STANDARD PLAN RSP A77N4

2010 REVISED STANDARD PLAN RSP A77N4

Dist	COUNTY	ROUTE	POST MILES TOTAL PROJECT	SHEET No.	TOTAL SHEETS

Randell D. Hiatt
REGISTERED CIVIL ENGINEER
July 19, 2013
PLANS APPROVAL DATE
THE STATE OF CALIFORNIA OR ITS OFFICERS OR AGENTS SHALL NOT BE RESPONSIBLE FOR THE ACCURACY OR COMPLETENESS OF SCANNED COPIES OF THIS PLAN SHEET.

REGISTERED PROFESSIONAL ENGINEER Randell D. Hiatt C50200 exp. 6-30-15 CIVIL STATE OF CALIFORNIA

TO ACCOMPANY PLANS DATED _____

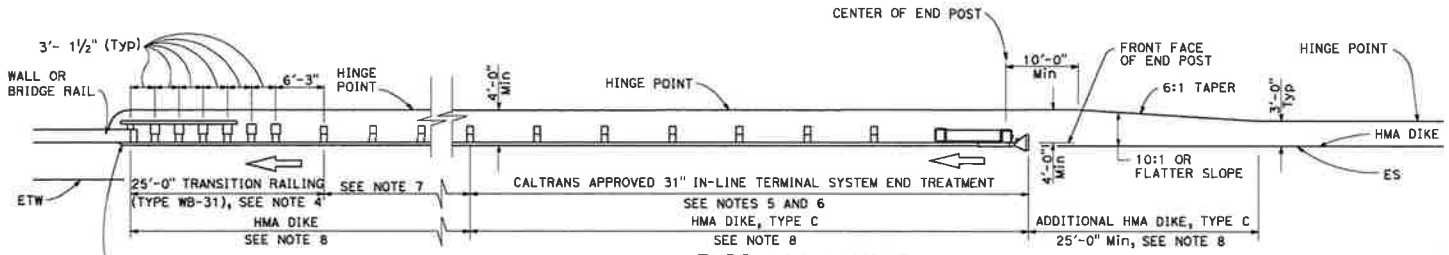

TYPE 12A LAYOUT

(MGS installation at structure approach with 31" In-line end treatment at traffic approach end of railing)
See Notes 9

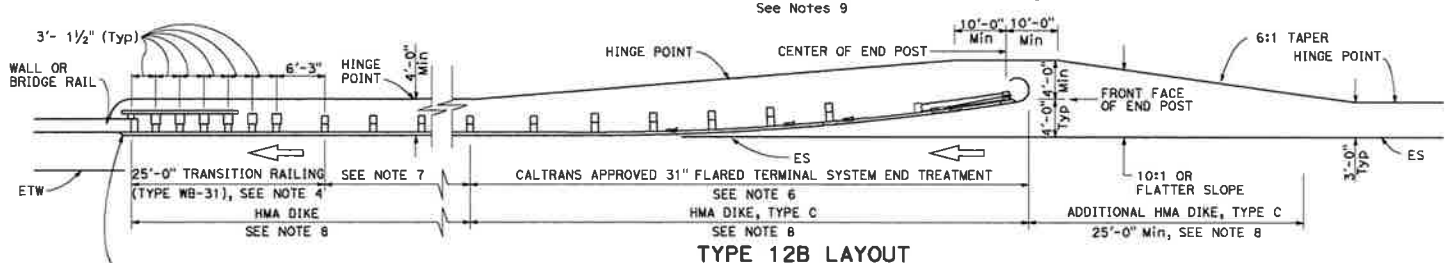

TYPE 12B LAYOUT

(MGS installation at structure approach with 31" Flared end treatment at traffic approach end of railing)
See Notes 9

NOTES:

1. Line post, blocks and hardware to be used are shown on Revised Standard Plans RSP A77L1, RSP A77L2, RSP A77M1, RSP A77N1 and RSP A77N2.
2. MGS post spacing to be 6'-3" center to center, except as otherwise noted.
3. Except as noted, line posts are 6" x 8" x 6'-0" wood with 6" x 12" x 1'-2" wood blocks. W6 x 8.5 or W6 x 9 steel posts, 6'-0" in length, with 6" x 12" x 1'-2" notched wood blocks or plastic blocks may be used for 6" x 8" x 6'-0" wood posts with 6" x 12" x 1'-2" wood blocks where applicable and when specified.
4. For Transition Railing (Type WB-31) details for Types 12A and 12B Layouts, see Revised Standard Plan RSP A77U4.
5. 31" in-line terminal system end treatments are used where site conditions will not accommodate a 31" flared end treatment.
6. The type 31" of terminal system end treatment to be used will be shown on the Project Plans.
7. Dependent on site conditions (embankment height, side slopes, or other fixed objects), it may be advisable to construct additional guard railing (a length equal to multiples of 12'-6" with 6'-3" post spacing) between the transition railing and end treatment. A 12.5 degree angle of departure can be drawn on the Project Plans from the edge of traveled way through the outer most point of the fixed object to determine the additional length of railing needed.
8. Where placement of dike is required with guard railing installations, see Revised Standard Plan RSP A77N4 for dike positioning details.
9. Type 12A or Type 12B Layouts are typically used:
   a. To the right of approaching traffic, at the end of a structure, on two-lane conventional highway where the roadbed width across the structure is less than 40 feet.
   b. To the left of approaching traffic, at the end of a structure, on two-lane conventional highway where the roadbed width across the structure is less than 40 feet.
   c. To the right of approaching traffic at the end of each structure on multilane freeways or expressways with separate adjacent or parallel bridges.
   d. To the right of approaching traffic at the end of the structure on multilane freeways or expressways with decked median on the bridge.
10. See Revised Standard Plan RSP A77Q3 for typical layout used left of approaching traffic at the ends of each structure on multilane freeways or expressways with separate adjacent or parallel bridges.
11. For additional details of typical connections to bridge rail, see Connection Detail AA on Revised Standard Plans RSP A77U1 and RSP A77U2 and Connection Detail FF on Revised Standard Plans RSP A77V1 and RSP A77V2.
12. For additional details of a typical connection to walls or abutments, see Revised Standard Plan RSP A77U3.

STATE OF CALIFORNIA
DEPARTMENT OF TRANSPORTATION

MIDWEST GUARDRAIL SYSTEM TYPICAL LAYOUTS FOR STRUCTURE APPROACH

NO SCALE

RSP A77Q1 DATED JULY 19, 2013 SUPPLEMENTS THE STANDARD PLANS BOOK DATED 2010.

REVISED STANDARD PLAN RSP A77Q1

2010 REVISED STANDARD PLAN RSP A77Q1

Dist	COUNTY	ROUTE	POST MILES TOTAL PROJECT	SHEET No.	TOTAL SHEETS

Randell D. Hiatt
REGISTERED CIVIL ENGINEER

July 19, 2013
PLANS APPROVAL DATE

THE STATE OF CALIFORNIA OR ITS OFFICERS OR AGENTS SHALL NOT BE RESPONSIBLE FOR THE ACCURACY OR COMPLETENESS OF SCANNED COPIES OF THIS PLAN SHEET.

REGISTERED PROFESSIONAL ENGINEER Randell D. Hiatt No. C50200 Exp. 6-30-15 CIVIL STATE OF CALIFORNIA

TO ACCOMPANY PLANS DATED _____

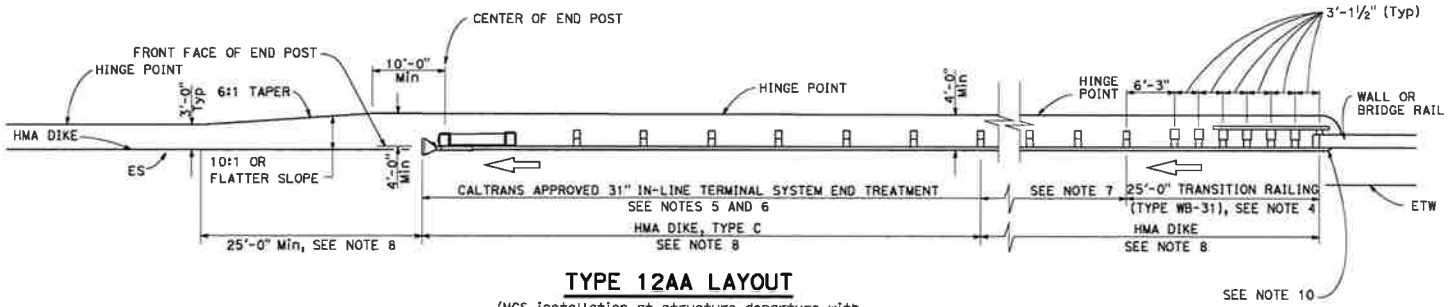

TYPE 12AA LAYOUT

(MGS installation at structure departure with 31" in-line end treatment at trailing end of railing)
See Notes 8 and 9

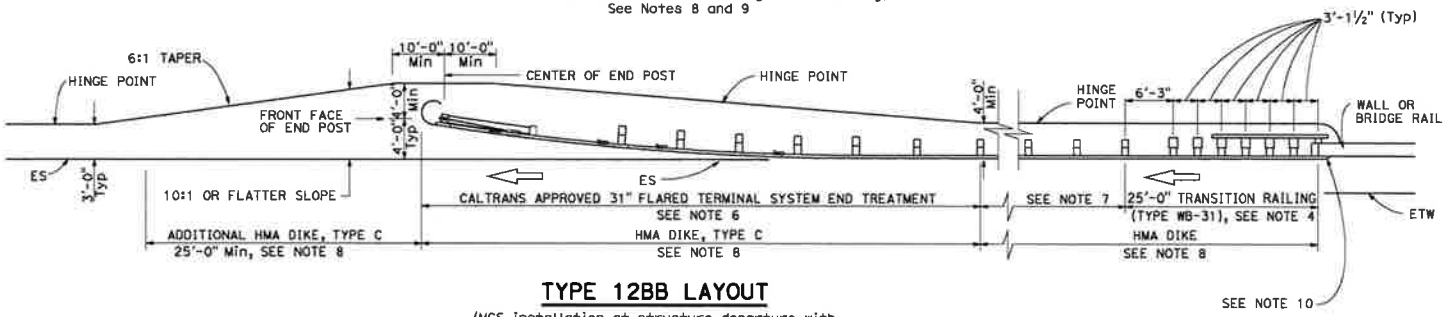

TYPE 12BB LAYOUT

(MGS installation at structure departure with 31" flared end treatment at trailing end of railing)
See Notes 8 and 9

NOTES:

1. Line post, blocks and hardware to be used are shown on Revised Standard Plans RSP A77L1, RSP A77L2, RSP A77M1, RSP A77N1 and RSP A77N2.
2. MGS post spacing to be 6'-3" center to center, except as otherwise noted.
3. Except as noted, line posts are 6" x 8" x 6'-0" wood with 6" x 12" x 1'-2" wood blocks. W6 x 8.5 or W6 x 9 steel posts, 6'-0" in length, with 6" x 12" x 1-2" notched wood blocks or notched recycled plastic blocks may be used for 6" x 8" x 6'-0" wood posts with 6" x 12" x 1'-2" wood blocks where applicable and when specified.
4. For Transition Railing (Type WB-31) details for Types 12AA and 12BB Layouts, see Revised Standard Plan RSP A77U4.
5. 31" in-line terminal system treatments are used where site conditions will not accommodate a 31" flared end treatment.
6. The type of 31" terminal system to be used will be shown on the Project Plans.
7. Dependent on site conditions (embankment height, side slopes, other fixed objects), it may be advisable to construct additional MGS (a length equal to multiples of 12'-6" with 6'-3" post spacing) between the transition railing and 31" end treatments.
8. Where placement of dike is required with MGS installations, see Revised Standard Plan RSP A77N4 for dike positioning details.
9. Type 12AA or Type 12BB Layouts are typically used to the right of traffic departing a structure on two-way conventional highways where the roadbed width across the structure is less than 40 feet.
10. For additional details of typical connections to bridge rail, see Connection Detail CC on Revised Standard Plan RSP A77U2 and Connection Detail HH on Revised Standard Plan RSP A77V2.

STATE OF CALIFORNIA
DEPARTMENT OF TRANSPORTATION

MIDWEST GUARDRAIL SYSTEM TYPICAL LAYOUTS FOR STRUCTURE DEPARTURE

NO SCALE

RSP A77Q4 DATED JULY 19, 2013 SUPPLEMENTS THE STANDARD PLANS BOOK DATED 2010.

REVISED STANDARD PLAN RSP A77Q4

2010 REVISED STANDARD PLAN RSP A77Q4

DIST	COUNTY	ROUTE	POST MILES TOTAL PROJECT	SHEET No.	TOTAL SHEETS

Randell D. Hiatt
REGISTERED CIVIL ENGINEER

July 19, 2013
PLANS APPROVAL DATE

THE STATE OF CALIFORNIA OR ITS OFFICERS OR AGENTS SHALL NOT BE RESPONSIBLE FOR THE ACCURACY OR COMPLETENESS OF SCANNED COPIES OF THIS PLAN SHEET.

REGISTERED PROFESSIONAL ENGINEER Randell D. Hiatt No. C50200 Exp. 6-30-15 CIVIL STATE OF CALIFORNIA

TO ACCOMPANY PLANS DATED _____

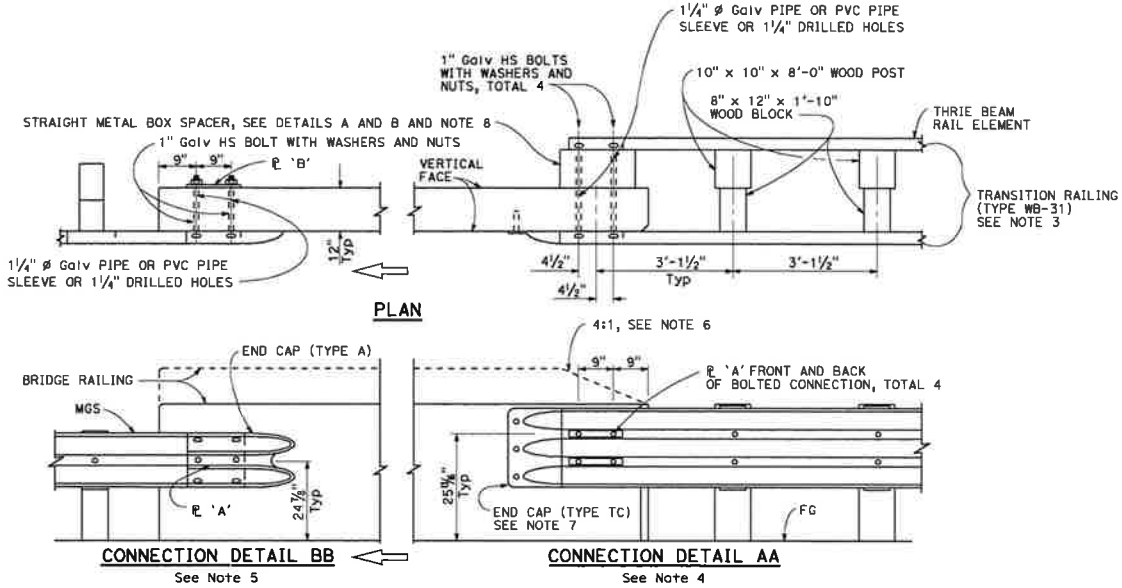

MIDWEST GUARDRAIL SYSTEM CONNECTION TO BRIDGE RAILING WITHOUT SIDEWALK

NOTES:

1. See Revised Standard Plan RSP A77U2 for additional connection details to bridges without sidewalks.
2. Additional details of posts, blocks and hardware are shown on Revised Standard Plans RSP A77M1, RSP A77N1 and RSP A77N2.
3. For additional details of Transition Railing (Type WB-31), see Revised Standard Plan RSP A77U4. Transition Railing (Type WB-31) transitions the 12 gauge MGS railing section to a heavier gage nested thrie beam railing section which is connected to the concrete bridge railing.
4. For typical use of Connection Detail AA, see Layout Types 12A and 12B on Revised Standard Plan RSP A77Q1, Layout Types 12C and 12D on Revised Standard Plan RSP A77Q2, and Layout Type 12E on Revised Standard Plan RSP A77Q3.
5. For typical use of Connection Detail BB, see Layout Type 12D (structure departure railing connection) on Revised Standard Plan RSP A77Q2 and Layout Type 12DD on Revised Standard Plan RSP A77Q5.
6. Where the height of the bridge railing exceeds the height of the thrie beam railing by more than 1" at Connection Detail AA, taper the top of the end of the bridge railing at 4:1 to match the top elevation of the thrie beam rail.
7. For details of End Cap (Type TC), see Revised Standard Plan RSP A77U4.
8. See Revised Standard Plan RSP A77U4 for additional details regarding depth dimension for straight metal box spacer.

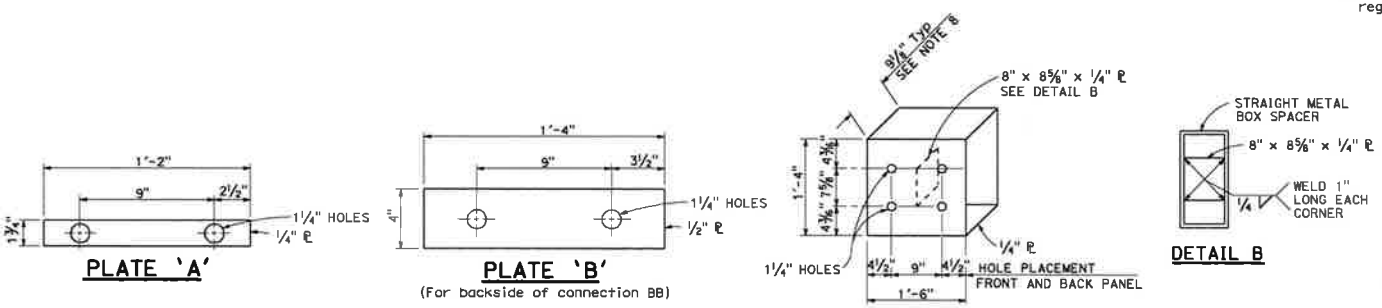

STRAIGHT METAL BOX SPACER

STATE OF CALIFORNIA
DEPARTMENT OF TRANSPORTATION

MIDWEST GUARDRAIL SYSTEM CONNECTIONS TO BRIDGE RAILINGS WITHOUT SIDEWALKS DETAILS No. 1

NO SCALE

RSP A77U1 DATED JULY 19, 2013 SUPPLEMENTS THE STANDARD PLANS BOOK DATED 2010.

REVISED STANDARD PLAN RSP A77U1

2010 REVISED STANDARD PLAN RSP A77U1

DIST	COUNTY	ROUTE	POST MILES TOTAL PROJECT	SHEET No.	TOTAL SHEETS

Randell D. Hiatt
REGISTERED CIVIL ENGINEER

July 19, 2013
PLANS APPROVAL DATE

THE STATE OF CALIFORNIA OR ITS OFFICERS OR AGENTS SHALL NOT BE RESPONSIBLE FOR THE ACCURACY OR COMPLETENESS OF SCANNED COPIES OF THIS PLAN SHEET.

REGISTERED PROFESSIONAL ENGINEER Randell D. Hiatt No. C50200 Exp. 6-30-15 CIVIL STATE OF CALIFORNIA

TO ACCOMPANY PLANS DATED _____

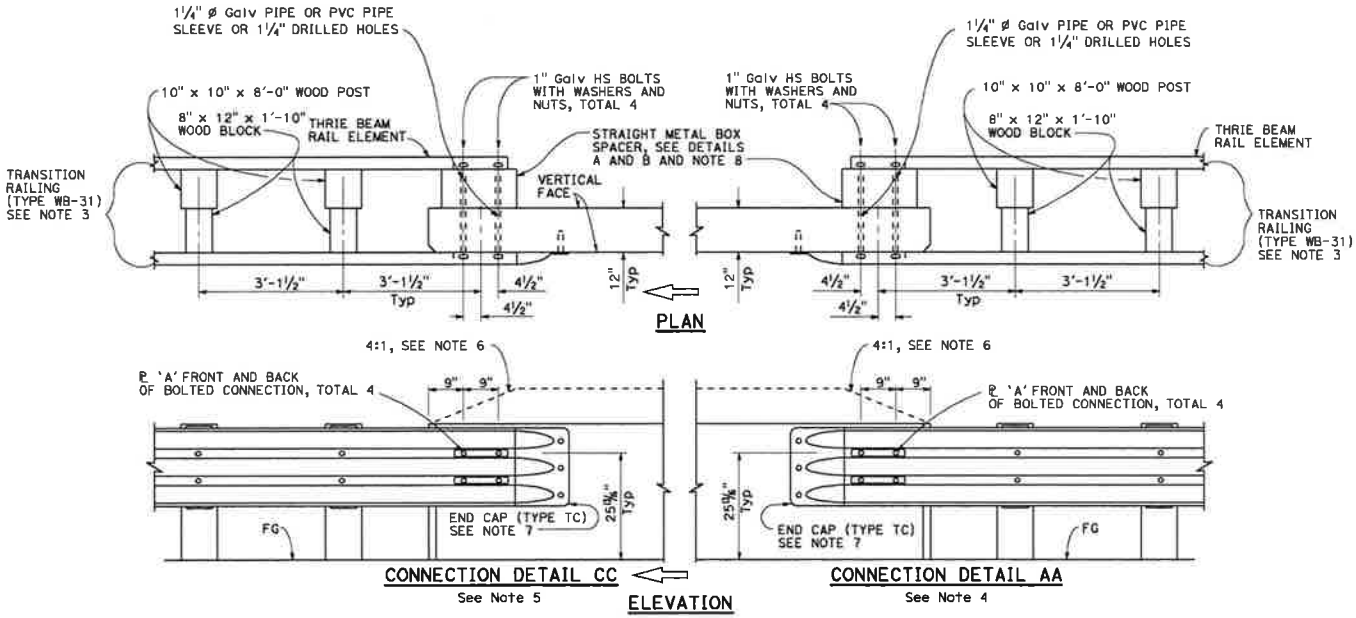

MIDWEST GUARDRAIL SYSTEM CONNECTION TO BRIDGE RAILING WITHOUT SIDEWALK

NOTES:

1. See Revised Standard Plan RSP A77U1 for additional connection details to bridges without sidewalks.
2. Additional details of posts, blocks and hardware are shown on Revised Standard Plans RSP A77M1, RSP A77N1 and RSP A77N2.
3. For additional details of Transition Railing (Type WB-31), see Revised Standard Plan RSP A77U4. Transition Railing (Type WB-31) transitions the 12 gauge MGS railing section to a heavier gage nested thrie beam railing section which is connected to the concrete bridge railing.
4. For typical use of Connection Detail AA, see Layout Types 12A and 12B on Revised Standard Plan RSP A77Q1, Layout Types 12C and 12D on Revised Standard Plan RSP A77Q2, and Layout Type 12E on Revised Standard Plan RSP A77Q3.
5. For typical use of Connection Detail CC, see Layout Types 12AA and 12BB on Revised Standard Plan RSP A77Q4 and Layout Type 12CC on Revised Standard Plan RSP A77Q5.
6. Where the height of the bridge railing exceeds the height of the thrie beam railing by more than 1" at Connection Detail AA and connection Detail CC, taper the top of the end of the bridge railing at 4:1 to match the top elevation of the thrie beam railing.
7. For details of End Cap (Type TC), see Revised Standard Plan RSP A77U4.
8. See Revised Standard Plan RSP A77U4 for additional details regarding depth dimension for straight metal box spacer.

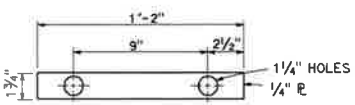

PLATE 'A'

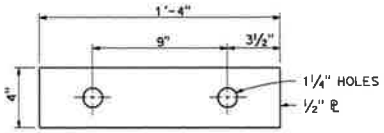

PLATE 'B'
(For backside of connection BB)

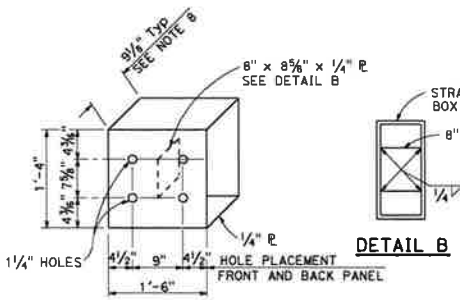

DETAIL A
STRAIGHT METAL BOX SPACER

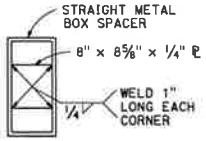

DETAIL B

STATE OF CALIFORNIA
DEPARTMENT OF TRANSPORTATION

MIDWEST GUARDRAIL SYSTEM CONNECTIONS TO BRIDGE RAILINGS WITHOUT SIDEWALKS DETAILS No. 2

NO SCALE

RSP A77U2 DATED JULY 19, 2013 SUPPLEMENTS THE STANDARD PLANS BOOK DATED 2010.

REVISED STANDARD PLAN RSP A77U2

2010 REVISED STANDARD PLAN RSP A77U2

DIST	COUNTY	ROUTE	POST MILES TOTAL PROJECT	SHEET No.	TOTAL SHEETS

Randell D. Hiatt
REGISTERED CIVIL ENGINEER
November 15, 2013
PLANS APPROVAL DATE
Randell D. Hiatt No. C50200 Exp. 6-30-15 CIVIL STATE OF CALIFORNIA
THE STATE OF CALIFORNIA OR ITS OFFICERS OR AGENTS SHALL NOT BE RESPONSIBLE FOR THE ACCURACY OR COMPLETENESS OF SCANNED COPIES OF THIS PLAN SHEET.

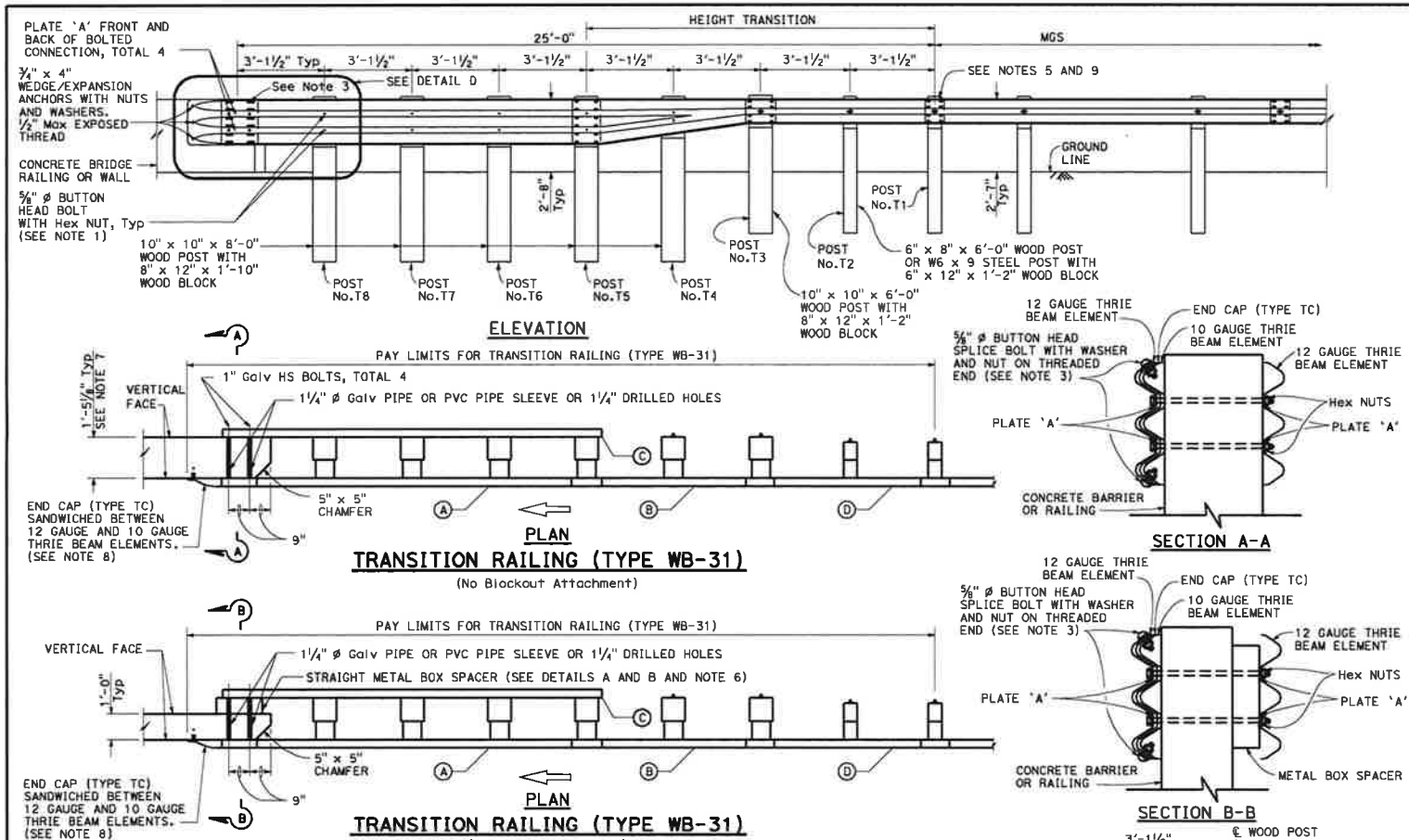

LEGEND:

- (A) NESTED THRIE BEAM ELEMENTS (ONE 12 GAUGE ELEMENT NESTED OVER ONE 10 GAUGE ELEMENT).
- (B) ONE ASYMMETRICAL 10 GAUGE "W" BEAM TO THRIE BEAM ELEMENT.
- (C) ONE 12 GAUGE THRIE BEAM ELEMENT.
- (D) ONE 10 GAUGE "W" BEAM RAIL ELEMENT (7'-3½"LENGTH)

10 GAUGE = 0.138" THICK
12 GAUGE = 0.108" THICK

NOTES: TO ACCOMPANY PLANS DATED _____

1. Use ⅝" ø Button head bolts and hex nuts for connections to posts. No washer on rail face for bolted connections to post.
2. The nested rail elements, end cap, and 'W' beam to thrie beam element may be spliced together prior to bolting the elements to the wood post and concrete barrier or railing.
3. Exterior splice bolt holes for rail element splices at Post No. T5 and the connection to the concrete barrier or railing shall be the standard 29/32" x 1⅛" slot size. Interior splice bolt holes at these locations may be increased up to 1¼" ø. Only the top 4 and the bottom 4 splice bolts with washers and nuts are required for rail splices at Post No. T5 and the connection to the concrete barrier or railing.
4. The top elevation of Posts No. T2 through No. T7 shall not project more than 1" above the top elevation of the rail element.
5. Typically, the railing connected to Transition Railing (Type WB-31) will be either standard railing section of MGS with height transition ratio of 150:1 or a Caltrans approved 31" end treatment attached to Post No. T1.
6. The depth of the metal box spacer varies from the 9⅛" to 1½" and is dependent on the width of the concrete railing or wall. The combined dimension for the depth of the metal box spacer plus the width of railing or wall is typically 21⅛". Where the space between the backside of the concrete railing or wall and the rear thrie beam element is less than 1½", metal plates similar to Plate 'A' are to be used as spacers.
7. Where the width of the concrete railing or wall is greater than 17⅛", wood blocks are to be used to fill the space created between the backside of Posts No. T5 through No. T8 and the rear thrie beam element. These wood blocks shall be 8" in width and 1'-2" in length. The dimension between the front thrie beam element and the rear thrie beam element is to match the width of the concrete railing or wall.
8. End cap may be installed over 12 gauge and 10 gauge thrie beam elements where transition railing is installed on the departure end of bridge railing.
9. Conform standard railing section height to 31" at Post No. T1 using height transition ratio of 150:1.

STATE OF CALIFORNIA
DEPARTMENT OF TRANSPORTATION

MIDWEST GUARDRAIL SYSTEM TRANSITION RAILING (TYPE WB-31)

NO SCALE

RSP A77U4 DATED NOVEMBER 15, 2013 SUPERSEDES RSP A77U4 DATED JULY 19, 2013 THAT SUPPLEMENTS THE STANDARD PLANS BOOK DATED 2010.

REVISED STANDARD PLAN RSP A77U4

2010 REVISED STANDARD PLAN RSP A77U4

Dist	COUNTY	ROUTE	POST MILES TOTAL PROJECT	SHEET No.	TOTAL SHEETS

REGISTERED CIVIL ENGINEER

October 19, 2012
PLANS APPROVAL DATE

Raymond Don Taxtoo
No. C37332
Exp. 6-30-14
CIVIL
STATE OF CALIFORNIA
REGISTERED PROFESSIONAL ENGINEER

THE STATE OF CALIFORNIA OR ITS OFFICERS OR AGENTS SHALL NOT BE RESPONSIBLE FOR THE ACCURACY OR COMPLETENESS OF SCANNED COPIES OF THIS PLAN SHEET.

TO ACCOMPANY PLANS DATED _____

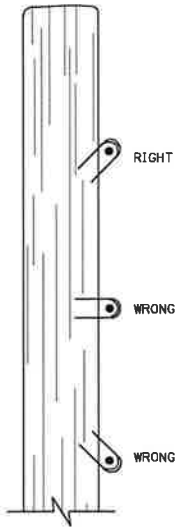

DRIVE STAPLES AT ANGLE

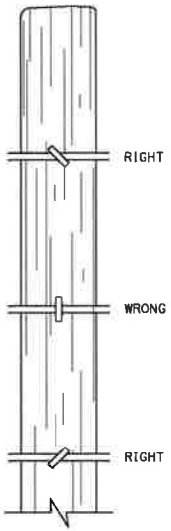

DO NOT DRIVE STAPLES PARALLEL TO SIDE OF POST

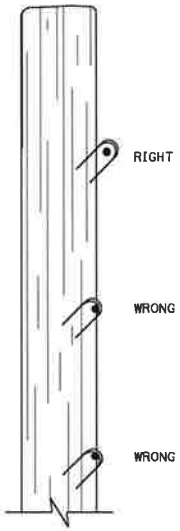

LEAVE WIRE LOOSE IN STAPLE

LINE POST STAPLING DETAILS

(Apply to rectangular/square and round posts)
Do not staple vertical wire in wire mesh.

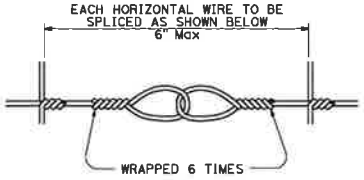

SPLICE DETAIL FOR BARBED WIRE/WIRE MESH FENCE

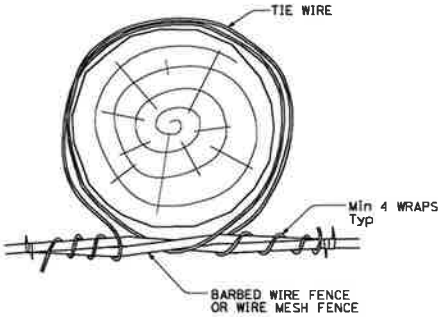

OPTION A

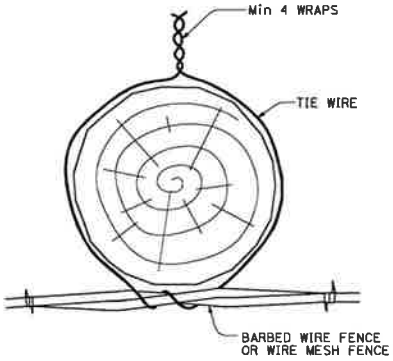

OPTION B

LINE POST WIRE TIE OPTION DETAILS

(Option details also apply to rectangular/square posts)

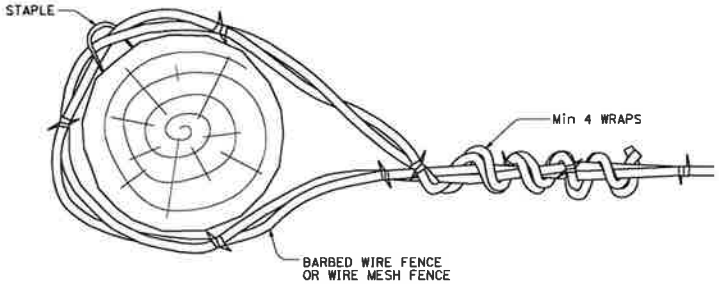

END, LATCH, PULL, AND CORNER POST DETAIL

(Also applies to rectangular/square posts)

STATE OF CALIFORNIA
DEPARTMENT OF TRANSPORTATION

BARBED WIRE AND WIRE MESH FENCE - MISCELLANEOUS DETAILS

NO SCALE

RSP A86D DATED OCTOBER 19, 2012 SUPPLEMENTS THE STANDARD PLANS BOOK DATED 2010.

REVISED STANDARD PLAN RSP A86D

2010 REVISED STANDARD PLAN RSP A86D

DIST	COUNTY	ROUTE	POST MILES TOTAL PROJECT	SHEET No.	TOTAL SHEETS

REGISTERED CIVIL ENGINEER

July 19, 2013
PLANS APPROVAL DATE

THE STATE OF CALIFORNIA OR ITS OFFICERS OR AGENTS SHALL NOT BE RESPONSIBLE FOR THE ACCURACY OR COMPLETENESS OF SCANNED COPIES OF THIS PLAN SHEET.

REGISTERED PROFESSIONAL ENGINEER Michael Janzen No. 44766 Exp. 03-31-14 CIVIL STATE OF CALIFORNIA

TO ACCOMPANY PLANS DATED _____

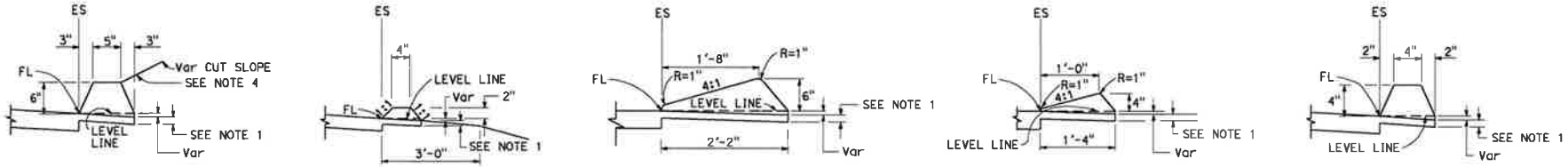

TYPE A
See Note 3

TYPE C

TYPE D

TYPE E

TYPE F
See Note 5

DIKES

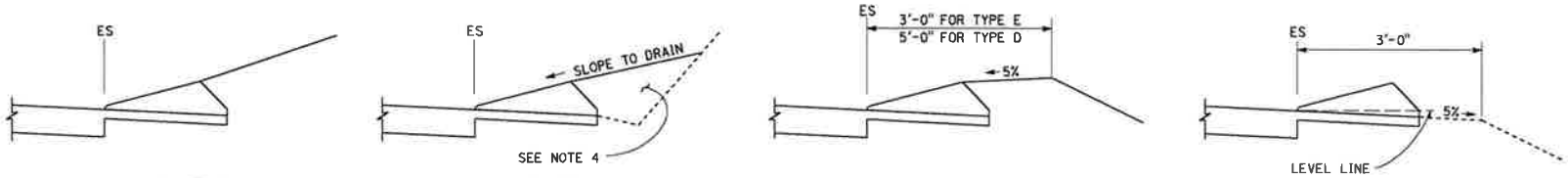

CASE C-1
Cut Slope

CASE C-2
Cut Slope

CASE F

CASE R
See Note 2

TYPE D AND E BACKFILL DETAILS

NOTES:

1. For HMA shoulders only, extend top layer of HMA placed on the shoulder under dike with no joint at the ES. For projects with OGFC shoulders, do not extend OGFC under dike. See project plans for modified dike detail.
2. Case R applies to retrofit only projects where restrictive conditions do not provide enough width for Case F backfill.
3. Type A dike only to be used where restrictive slope conditions do not provide enough width to use Type D or Type E dike.
4. Fill and compact with excavated material to top of dike.
5. Use Type F dike, where dike is required with guard railing installations. See Revised Standard Plan RSP A77N4 for dike positioning details.

DIKE QUANTITIES

TYPE	CUBIC YARDS PER LINEAR FOOT
A	0.0135
C	0.0038
D	0.0293
E	0.0130
F	0.0066

Quantities based on 5% cross slope.

STATE OF CALIFORNIA
DEPARTMENT OF TRANSPORTATION

HOT MIX ASPHALT DIKES

NO SCALE

RSP A87B DATED JULY 19, 2013 SUPERSEDES STANDARD PLAN A87B
DATED MAY 20, 2011 - PAGE 120 OF THE STANDARD PLANS BOOK DATED 2010.

REVISED STANDARD PLAN RSP A87B

2010 REVISED STANDARD PLAN RSP A87B

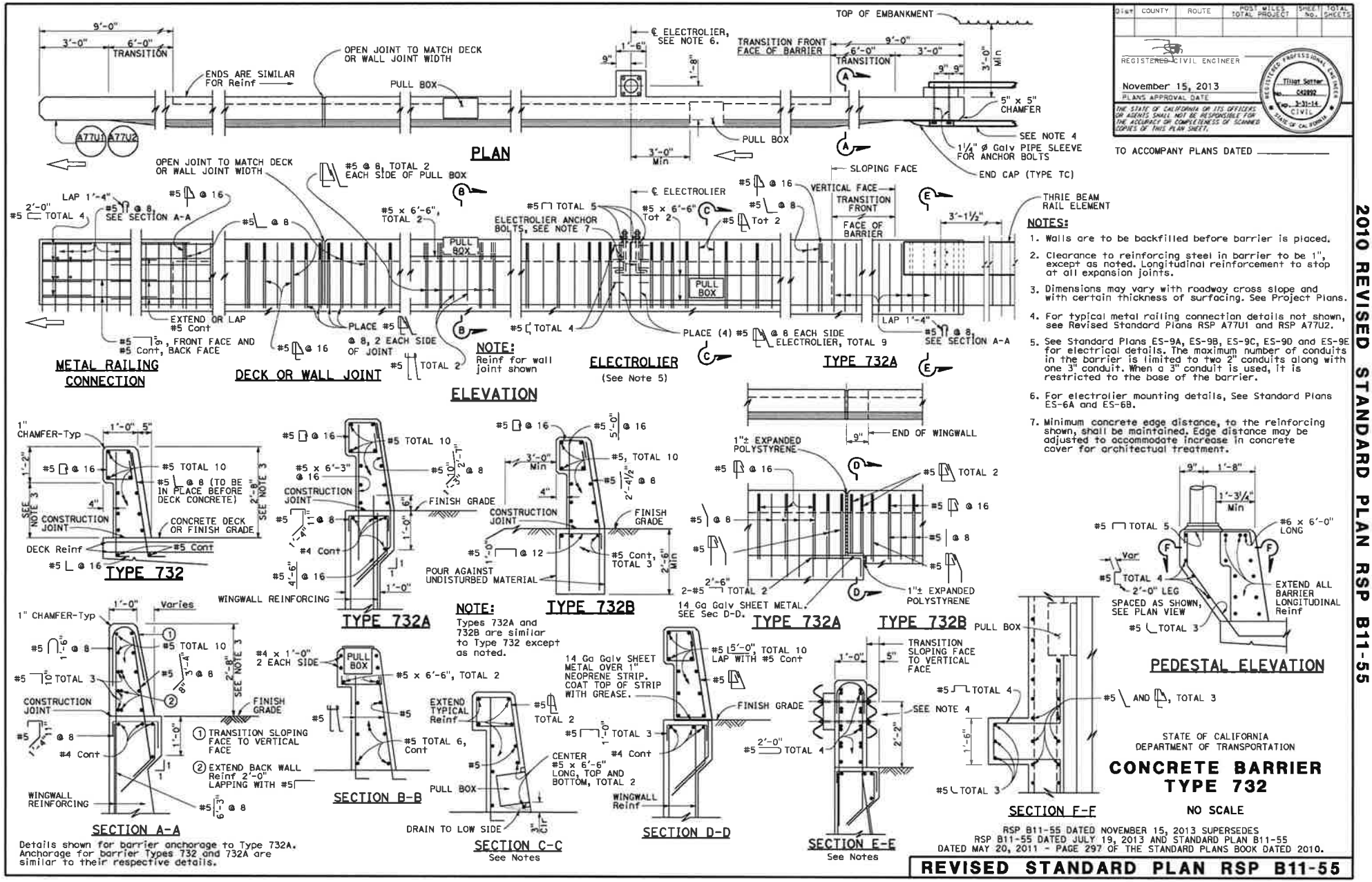
PLAN
ELEVATION
METAL RAILING CONNECTION
DECK OR WALL JOINT
ELECTROLIER
(See Note 5)
TYPE 732A
TYPE 732
TYPE 732B
NOTE:
Reinf for wall joint shown
NOTE:
Types 732A and 732B are similar to Type 732 except as noted.
SECTION A-A
SECTION B-B
SECTION C-C
See Notes
SECTION D-D
SECTION E-E
See Notes
SECTION F-F
PEDESTAL ELEVATION
Details shown for barrier anchorage to Type 732A. Anchorage for barrier Types 732 and 732A are similar to their respective details.
TO ACCOMPANY PLANS DATED
NOTES:
1. Walls are to be backfilled before barrier is placed.
2. Clearance to reinforcing steel in barrier to be 1", except as noted. Longitudinal reinforcement to stop at all expansion joints.
3. Dimensions may vary with roadway cross slope and with certain thickness of surfacing. See Project Plans.
4. For typical metal railing connection details not shown, see Revised Standard Plans RSP A77U1 and RSP A77U2.
5. See Standard Plans ES-9A, ES-9B, ES-9C, ES-9D and ES-9E for electrical details. The maximum number of conduits in the barrier is limited to two 2" conduits along with one 3" conduit. When a 3" conduit is used, it is restricted to the base of the barrier.
6. For electrolier mounting details, See Standard Plans ES-6A and ES-6B.
7. Minimum concrete edge distance, to the reinforcing shown, shall be maintained. Edge distance may be adjusted to accommodate increase in concrete cover for architectual treatment.
STATE OF CALIFORNIA
DEPARTMENT OF TRANSPORTATION
CONCRETE BARRIER
TYPE 732
NO SCALE
RSP B11-55 DATED NOVEMBER 15, 2013 SUPERSEDES
RSP B11-55 DATED JULY 19, 2013 AND STANDARD PLAN B11-55
DATED MAY 20, 2011 - PAGE 297 OF THE STANDARD PLANS BOOK DATED 2010.
REVISED STANDARD PLAN RSP B11-55
2010 REVISED STANDARD PLAN RSP B11-55

PAGE LEFT BLANK INTENTIONALLY

APPENDIX G

COUNTY'S STANDARD CONSTRUCTION DRAWING M-1

PAGE LEFT BLANK INTENTIONALLY

Revisions					
Description	Approved	Date	Description	Approved	Date
ADDED NOTE 4	REM	NOV 07			

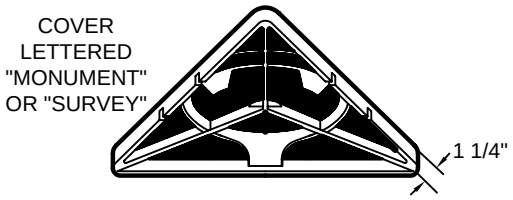

COVER (BOTTOM)

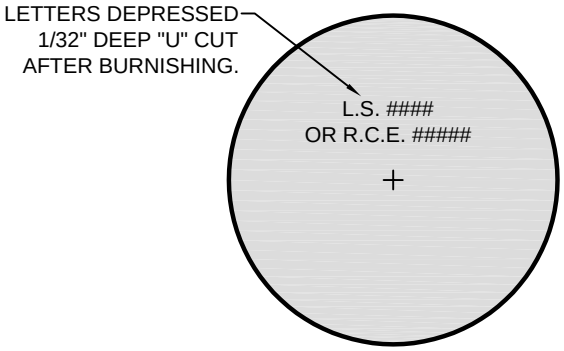

CAP PLAN

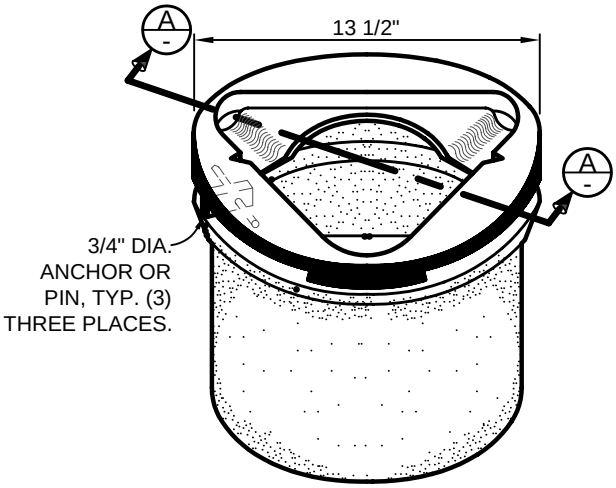

ISOMETRIC

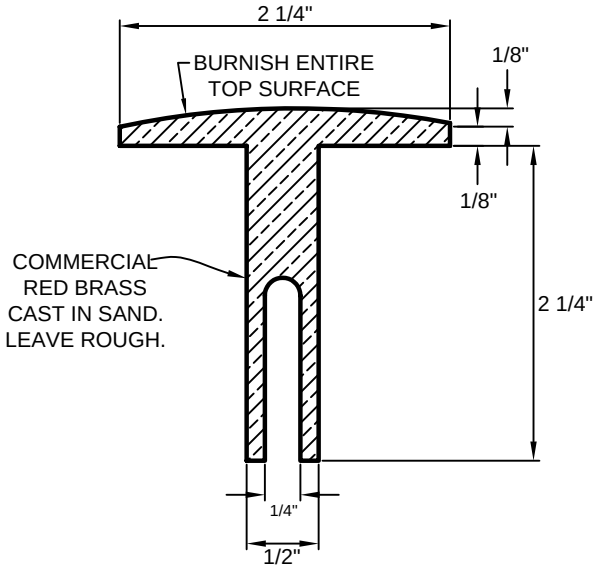

CAP SECTION

RISER RING

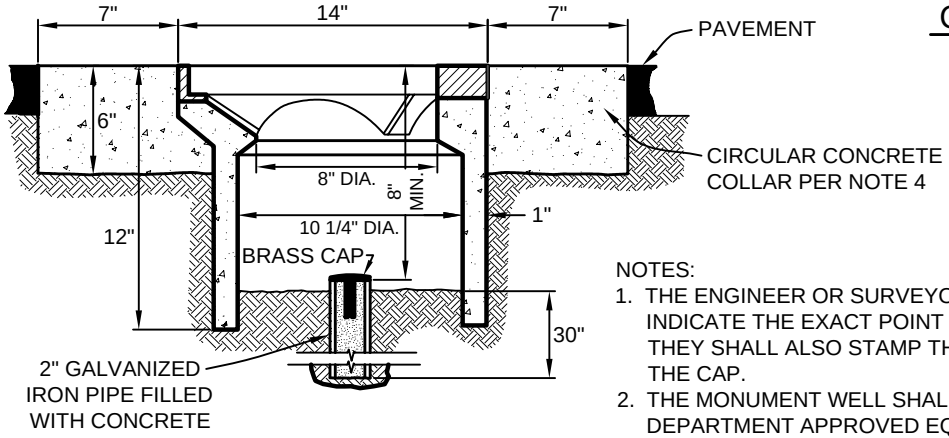

SECTION A-A

NOTES:

1. THE ENGINEER OR SURVEYOR SETTING THE MONUMENT SHALL INDICATE THE EXACT POINT BY MARKING A CROSS ON THE CAP. THEY SHALL ALSO STAMP THEIR LICENSE TYPE AND NUMBER ON THE CAP.
2. THE MONUMENT WELL SHALL BE BROOKS PRODUCTS No. 4TT, OR DEPARTMENT APPROVED EQUAL.
3. BRASS CAPS ARE AVAILABLE FOR PURCHASE FROM THE COUNTY PUBLIC WORKS DEPARTMENT.
4. CONCRETE COLLAR SHALL CONFORM TO STATE STANDARD 90-1.01, 565 LBS/CY CEMENTITIOUS MATERIAL [6 SACK].

DEPARTMENT OF PUBLIC WORKS & TRANSPORTATION

STANDARD STREET MONUMENT

FOR PAVED ROADS

Scale:	Adopted:
NTS	2011

Drawing No: M-1

Sheet No: 1 OF 1

PAGE LEFT BLANK INTENTIONALLY

APPENDIX H

STOCKPILE LOCATION MAP

PAGE LEFT BLANK INTENTIONALLY

STOCKPILE LOCATION

Huasna Rd #2023

Branch Mill Rd #2020

APN 047-161-012

PARCEL NO. 13-04

VALLEY INVESTMENT COMPANY

2020-B2

EXHIBIT B

POST CONSTRUCTION STOCKPILE LOCATION

COUNTY OF SAN LUIS OBISPO

PUBLIC WORKS & TRANSPORTATION DEPARTMENT

1: 4,800

0 200 400 Feet

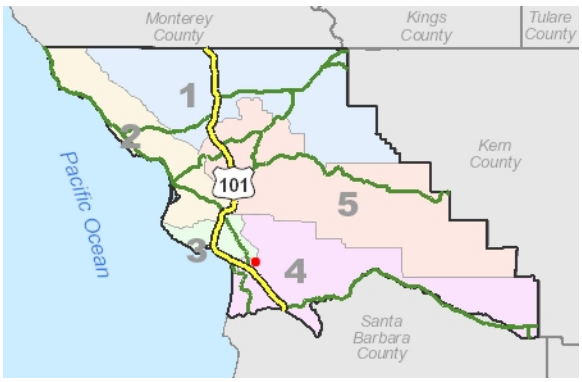

PAGE LEFT BLANK INTENTIONALLY

APPENDIX I

FORMS

PAGE LEFT BLANK INTENTIONALLY

RECYCLING PLAN

SECTION 1. PROJECT INFORMATION

Contract Title	Contractor Name	
	Contractor Phone	Contractor Fax
Contract Number	Street Address	
Total Contract Amount	City, State, Zip	
Print Name and Title	Signature	Date

SECTION 2. RECYCLING PLAN

	Before Construction (estimated tons)				
	Landfill	Recycling Facility		Reuse	
Materials	(Tons)	(Tons)	Location	(Tons)	Location
Cleared Vegetation					
Asphalt Concrete					
Concrete					
Metals (including spent equipment)					
Lumber					
Drywall					
Mixed Recyclables					
Trash					
Totals					
% Diversion					

Official Use Only

Recycling Plan Approved ☐	Recycling Plan Denied ☐

Information Required:

Print Name and Title	Signature	Date

DISPOSAL REPORT

SECTION 1. PROJECT INFORMATION		
Contract Title	Contractor Name	
	Contractor Phone	Contractor Fax
Contract Number	Street Address	
Total Contract Amount	City, State, Zip	

Contractor Certification: I certify under penalty of perjury that the information provided in this form is complete and accurate.

Print Name and Title	Signature	Date

SECTION 2. DISPOSAL REPORT

	After Construction (actual tons)				
	Landfill	Recycling Facility		Reuse	
Materials	(Tons)	(Tons)	Location	(Tons)	Location
Cleared Vegetation					
Asphalt Concrete					
Concrete					
Metals (including spent equipment)					
Lumber					
Drywall					
Mixed Recyclables					
Trash					
Totals					
% Diversion					

I have reviewed and approved the information submitted in this report for completeness

Resident Engineer's Name:	Signature:	Date:

Official Use Only

Disposal Report Approved ☐	Disposal Report Denied ☐
Information Required	

Print Name and Title	Signature	Date

OPT OUT OF PAYMENT ADJUSTMENTS FOR PRICE INDEX FLUCTUATIONS

You may opt out of the payment adjustments for price index fluctuations specified in section 9-1.07 of the General Conditions. To opt out, complete this form and submit it with your bid.

I opt out of the payment adjustments for price index fluctuations.

Company: _____

Signed: _____

Printed Name: _____

Title: _____

Date: _____