SAN LUIS OBISPO COUNTY
DEPARTMENT OF PUBLIC WORKS
Paavo Ogren, Director

County Government Center, Room 207 • San Luis Obispo CA 93408 • (805) 781-5252
Fax (805) 781-1229 email address: pwd@co.slo.ca.us

November 14, 2013

FAX AND EMAIL &
ATTACH TO CONTRACT

ADDENDUM NO. 4 TO
LOS OSOS WASTEWATER PROJECT
LOS OSOS WATER RECYCLING FACILITY
LOS OSOS, CA
CONTRACT NO. 300448.08.02

The final day, time and location for submittal of Bid remain unchanged:
Date / Time: Thursday, November 21, 2013 at 3:00 p.m.

At: Office of the County Clerk
1055 Monterey Street, Room D-120
San Luis Obispo, California 93408

Certain revisions are hereby incorporated into the Bidding Documents for the subject project. These revisions are as follows:

Volume 1B, Division 7 – Thermal and Moisture Protection, is hereby amended as follows:

1) On page 07840-1, from Section 07840, Firestopping, add a new Paragraph 1.01.B as follows and insert after Paragraph 1.01.A:

   B. Refer to the architectural drawings for the locations of enclosed spaces that are required to be fire rated.

Volume 1B, Division 9 – Finishes, is hereby amended as follows:

1) On page 09960-14, from Section 09960, High-Performance Coatings, delete Paragraph 3.08A in its entirety and insert the following in its place:

A. Preparation:
   1. Prepare surfaces in accordance with general preparation requirements and as follows:
      a. Abrasive blast at jobsite ferrous metal surfaces to be submerged that are not shop-coated or are in need of re-coating, in accordance with SSPC SP-5 prior to coating. When cleaned surfaces rust or discolor, abrasive blast surfaces in accordance with SSPC SP-10.
      b. Abrasive blast at jobsite non-submerged ferrous metal surfaces that are not shop-coated or are in need of re-coating, in accordance with SSPC SP-10, prior to coating. When cleaned surfaces rust or discolor, abrasive blast surfaces in accordance with SSPC SP‑6.
      c. Abrasive blast clean ductile iron surfaces at jobsite that are not shop-coated or are in need of re-coating, in accordance with SSPC SP-7.

2) On page 09960-15, delete Paragraph 3.09.A.1.c in its entirety and insert the following in its place:
      c. If not shop-primed or when re-coating is required, abrasive blast ferrous metal surfaces at jobsite prior to coating. Abrasive blast clean rust and discoloration from surfaces.

Volume 1B, Division 11 – Equipment, is hereby amended as follows:

1) On page 11378-1, Section 11378, Sludge Storage Tank Aeration Diffuser System, delete Paragraph 1.03.A in its entirety and insert the following in its place:

   A. Manufacturers: One of the following or equal:
      1. Ovivo USA, LLC.
      2. Sanitaire.

2) On page 11378-2, Section 11378, Sludge Storage Tank Aeration Diffuser System, delete Paragraph 1.03.B in its entirety.

3) On page 11378-2, Section 11378, Sludge Storage Tank Aeration Diffuser System, delete Paragraph 1.04B in its entirety and insert the following in its place:

   B. Experience: The aeration equipment shall be furnished by a manufacturer engaged in the production of the specified type of engineered air diffusion equipment for a minimum of 10 years. The manufacturer shall have furnished similar equipment for at least 20 other installations performing similar duty, including process, capacity, submergence and environment. Provide a customer contact list with telephone numbers that includes a minimum of 10 contacts from facilities with an equal or greater number of diffusers than this plant.

Volume 1B, Division 13 – Special Constructions, is hereby amended as follows:

1) On page 13447-12, Section 13447, Electric Motorized Actuators, add a new entry for 23-EDR-130 as follows:

MOTORIZED OPERATOR SCHEDULE								
Tag No. of Associated Valve or Gate	Reference Drawing	Valve or Gate Size, inches	Valve or Gate Type	Operator Function	Power Supply	Motor Horsepower (1)(2)	NEMA Enclosure Type	Notes
23-EDR-130	23M01	4	3-Way PV	Per P&IDs	480-Volt, 3-Phase	0.75	Per Section 16050	

2) On page 13447-12, Section 13447, Electric Motorized Actuators, revise the entries for 31-EDM-244, 31-EDM-245, and 31-EDM-246 as follows:

MOTORIZED OPERATOR SCHEDULE								
Tag No. of Associated Valve or Gate	Reference Drawing	Valve or Gate Size, inches	Valve or Gate Type	Operator Function	Power Supply	Motor Horsepower (1)(2)	NEMA Enclosure Type	Notes
31-EDM-244	31M01	10 ~~12~~	BFV	Per P&IDs	480-Volt, 3-Phase	1	Per Section 16050	
31-EDM-245		10 ~~12~~						
31-EDM-246		10 ~~12~~						
31-EDR-240		18						
31-EDR-247		6						
31-EDR-248		6						
31-EDR-249		6						

Volume 1C, Division 15 – Mechanical, is hereby amended as follows:

1) On page 15052-19 and 15052-20, Section 15052, Common Work Results for General Piping, revise the entry in the Pipe Schedule for REW - Recycled or Reclaimed Water as follows:

PIPE SCHEDULE									
Flow Stream Identifier	Service	Nominal Diameter (inches)	Materials	Class, Schedule, or Thickness	Joints/ Fittings	Test Pressure/ Method	Lining	Coating	Comments
REW	Recycled or Reclaimed Water (Downstream of Effluent Pumps)								
	Exposed	<4	CPVC	Sch. 80	SW or FL	125 psig/HH	None	WAE	
	Exposed	≥4 ~~>4~~	DIP	Class 53	FL	175 psig/HH	CM	EPU	
	Buried	<4	PVC	Sch. 80	SW	125 psig/HH	None	WAE	
	Buried	≥4	DIP	Class 53	RMJ or RPO	175 psig/HH	CM	PE	
	Submerged	>4	DIP	Class 53	FL	175 psig/HH	CM	HSE	
REW	Recycled or Reclaimed Water (Upstream of Effluent Pumps)								
	Exposed	≥4	DIP	Class 53	FL	25 psig/HH	CM	EPU	
	Buried	≥4	DIP	Class 53	~~FL~~ Note 6	25 psig/HH	CM	PE	~~Note 6~~
	Submerged	≥4	DIP	Class 53	FL	25 psig/HH	CM	HSE	

2) On page 15052-21, Section 15052, Common Work Results for General Piping, revise the entry in the Pipe Schedule for SE – Secondary Effluent as follows:

PIPE SCHEDULE									
Flow Stream Identifier	Service	Nominal Diameter (inches)	Materials	Class, Schedule, or Thickness	Joints/ Fittings	Test Pressure/ Method	Lining	Coating	Comments
SE	Secondary Effluent								
	Exposed	<4	CPVC	Sch. 80	SW or FL	25 psig/HH	None	WAE	
	Exposed	≥4	DIP	Class 53	FL or GE	25 psig/HH	CM	EPU	
	Buried	≥4	DIP	Class 53	RPO or RMJ	25 psig/HH	CM	PE	

3) On page 15052-22, Section 15052, Common Work Results for General Piping, revise the entry in the Pipe Schedule for TWAS – Thickened Waste Activated Sludge (Downstream of Sludge Storage Tanks) as follows:

PIPE SCHEDULE									
Flow Stream Identifier	Service	Nominal Diameter (inches)	Materials	Class, Schedule, or Thickness	Joints/ Fittings	Test Pressure/ Method	Lining	Coating	Comments
TWAS	Thickened Waste Activated Sludge (Downstream of Sludge Storage Tanks)								
	Exposed	<4	316 SST	Sch. 40	WLD or FL	100 psig/HH	None	None	
	Exposed	≥4	DIP	Class 53	FL or GE	100 psig/HH	GL	EPU	
	Buried	≥4	DIP	Class 53	RPO or RMJ	100 psig/HH	GL	PE	
	Submerged	≥4	DIP	Class 53	FL	100 psig/HH	GL	HSE	

4) On page 15052-24, Section 15052, Common Work Results for General Piping, at the end of the Pipe Schedule, delete Note (6) **in its entirety and insert the following in its place:**

(6) Buried REW piping between the UV Facility and the Inlet Structures of the REW Storage Ponds shall have joints and fittings that are RMJ or RPO. Buried REW piping between the Outlet Structures of the REW Storage Ponds and the Effluent Pump Station shall have joints and fitting that are flanged.

5) On page 15052-24, Section 15052, Common Work Results for General Piping, at the end of the Pipe Schedule, delete Note (7) **in its entirety and insert the following in its place:**

(7) 'Not Used.'

6) On page 15116-4, Section 15116, Plug Valves, insert new a Paragraph 2.03 as follows and insert after Paragraph 2.02:

2.03 MULTI-PORT PLUG VALVES FOR SLUDGE OR SCUM SERVICE

A. Manufacturers: One of the following or equal:
   1. DeZurik, PTW, for 3-way valve, and PFW for 4-way valve.
   2. Milliken, equivalent product.

B. Design: Non-lubricated tapered plug type including plugs faced with neoprene, body of cast iron, and stainless steel bearings in the upper and lower journal areas.

C. Furnish valves with single, double, or transfer style plug as indicated on the Drawings or as required.

7) On page 15116-4, Section 15116, Plug Valves, renumber Paragraph 2.03, Valve Operators, as follows:

~~2.03~~ 2.04 VALVE OPERATORS

8) On page 15116-4, Section 15116, Plug Valves, renumber Paragraph 2.04, Coating, as follows:

~~2.04~~ 2.05 COATING

Volume 2, Drawings, is hereby amended as follows:

1) Replace each of the following sheets with the corresponding revised sheet attached to this Addendum No. 4:

00G06	04M01	50E01	50E12	51E06	31N03
01C02	04M02	50E02	50E13	51E07	50N03
01C06	50M02	50E03	51E01	51E08	50N04
01C08	50M03	50E05	51E02	51E09	50N05
01C18	50M05	50E09	51E03	51E10	50N06
51AA01	23E01	50E10	51E04	31N01	50N12
70S03	40E01	50E11	51E05	31N02	AT07
					ET19

All bidders shall acknowledge acceptance of this correction notice. **PLEASE FAX TO US, TODAY, A SIGNED COPY OF THIS SHEET INDICATING CONFIRMATION OF RECEIPT OF THIS ADDENDUM (FAX (805) 781-1229).** If you are unable to read the fax, please call Rosalyn Piza in the Public Works Department at (805) 781-5252.

Dave Flynn JBW

for PAAVO OGREN
Director of Public Works

Enclosures

File: Contract No. 300448.08.02

ACKNOWLEDGMENT

Company Name	Printed Name	Signature	Date

L:\DESIGN\NOV13\300448.08.02 Addendum No. 4.doc.jwerst.taw

PIPING SYMBOLS

- AIR OR CHEMICAL DIFFUSER
- QUICK DISCONNECT HIGH PRESSURE AIR OR FLUSHING
- BATCHMETER
- AIR VENT
- BLOWER
- CALIBRATION COLUMN
- COMPRESSOR/TURBINE
- COMPRESSOR: RECIPROCATING
- DIAPHRAGM SEAL
- DRAIN
- EJECTOR OR EDUCTOR
- ELECTRIC MOTOR
- EQUIPMENT DRAIN
- EXPANSION JOINT, FLEXIBLE VIBRATION JOINT
- FAN: EXHAUST/SUPPLY
- FILTER
- FIRE HYDRANT
- FLAME ARRESTER
- FLOOR DRAIN
- GAUGE: PRESSURE
- GAUGE: DIFFERENTIAL PRESSURE
- GRINDER
- MIXER
- OIL OR MOISTURE TRAP
- PRIMARY LEVEL ELEMENT: BUBBLER
- PRIMARY LEVEL ELEMENT: FLOAT SWITCH
- PRIMARY LEVEL ELEMENT: PROBE
- PRIMARY LEVEL ELEMENT: ULTRASONIC
- PRIMARY FLOW ELEMENT: FLUME
- MAGNETIC FLOWMETER
- PRIMARY FLOW ELEMENT:
  X = C - CORIOLOS
  X = M - MAGNETIC
  X = P - PROPELLER
  X = PT - PITOT TUBE
  X = R - ROTAMETER
  X = T - TURBINE
  X = TH - THERMAL
  X = U - ULTRASONIC
  X = D - DENSITY
- PRIMARY FLOW ELEMENT: ORIFICE PLATE
- PRIMARY FLOW ELEMENT: VENTURI TUBE
- PRIMARY FLOW ELEMENT: WEIR
- PULSATION DAMPENER
- PUMP: CENTRIFUGAL
- PUMP: DIAPHRAGM
- PUMP: PERISTALTIC
- PUMP: PLUNGER
- PUMP: PROGRESSIVE CAVITY
- PUMP: RECIPROCATING
- PUMP: ROTARY
- PUMP: SCREW
- PUMP: SUBMERSIBLE
- PUMP: VERTICAL LIFT
- REDUCER: CONCENTRIC
- REDUCER: ECCENTRIC
- ROTARY CHEMICAL FEEDER
- RUPTURE DISK
- SAMPLE PORT
- SIGHT GLASS
- SLIDE GATE
- SLUICE GATE
- STRAINER: WYE TYPE
- STRAINER: WYE TYPE WITH BLOWOFF
- THERMOMETER
- VALVE: ANGLE
- VALVE: AIR RELIEF
- VALVE: BALL
- VALVE: BALL
- VALVE: BALL CHECK
- VALVE: BUTTERFLY
- VALVE: CONE
- VALVE: DIAPHRAGM
- VALVE: FLAPPER CHECK
- VALVE: FOUR WAY
- VALVE: GATE
- VALVE: GLOBE
- VALVE: HOSE
- VALVE: NEEDLE
- VALVE: PINCH
- VALVE: PLUG ECCENTRIC
- VALVE: PLUG ECCENTRIC
- VALVE: PRESSURE RELIEF PRESSURE-REDUCING REGULATOR
- VALVE: SWING CHECK
- VALVE: TELESCOPING
- VALVE: THREE WAY AIR OPERATED
- VALVE: THREE WAY MOTOR OPERATED
- VALVE: THREE WAY SOLENOID OPERATED
- VALVE: VACUUM
- BACKPRESSURE REGULATOR SELF-CONTAINED
- BACKPRESSURE REGULATOR W/EXTERNAL PRESSURE TAP
- PRESSURE-REDUCING REGULATOR: SELF CONTAINED
- PRESSURE-REDUCING REGULATOR W/EXTERNAL PRESSURE TAP
- ROUND DAMPER
- BACKDRAFT DAMPER
- RECTANGULAR DAMPER

GENERAL MECHANICAL & HVAC NOTES:

1. GENERAL MECHANICAL AND HVAC NOTES APPLY TO ALL MECHANICAL AND HVAC DRAWINGS.
2. ALL PIPE PENETRATIONS THROUGH WALLS AND FLOOR SLABS SHALL BE PROVIDED WITH SLEEVES PER TYPICAL DETAIL NUMBER P304 UNLESS NOTED OTHERWISE.
3. ALL PIPE PENETRATIONS THROUGH DRY WALLS SHALL BE PROVIDED WITH SLEEVES PER TYPICAL NUMBER P302 UNLESS NOTED OTHERWISE.

4A. ALL REQUIRED PIPE GUIDES, SUPPORTS, ANCHORS, AND PROVISIONS FOR EXPANSION MAY NOT NECESSARILY BE SPECIFICALLY CALLED OUT ON THE DRAWINGS. ALL SUPPORTS AND APPURTENANCES REQUIRED FOR A COMPLETE SYSTEM SHALL BE PROVIDED BY THE CONTRACTOR PER SPECIFICATIONS AND ARE TO INCLUDE ALL NECESSARY AND APPROPRIATE PROVISIONS FOR SUPPORT, SEISMIC RESTRAINT, BRACING, AND EXPANSION OF PIPES PER SPECIFICATION SECTIONS 15061, 15062, AND 15063.

4B. LAYOUTS AND SIZE OF PIPE SUPPORTS, PIPING EXPANSION PROVISIONS AND DUCT SUPPORTS WHERE SHOWN ON THE DRAWINGS ARE TO CONVEY CONCEPTUAL INTENT ONLY. SUPPORTS AND PROVISIONS FOR EXPANSION ARE REQUIRED AS DETERMINED BY THE CONTRACTOR PER SPECIFICATION SECTION 15061 "PIPE SUPPORTS", SECTION 15053 "SEISMIC RESTRAINTS FOR PIPING", AND SECTION 15054 "EXPANSION CONTROL FOR PIPING". CONTRACTOR SHALL PROVIDE ANALYSIS AND CALCULATIONS IN ACCORDANCE WITH THE SPECIFICATIONS. CONTRACTOR SHALL PROVIDE ADDITIONAL SUPPORTS, EXPANSION PROVISIONS, ETC. AS REQUIRED OR OTHERWISE NECESSARY AND APPROPRIATE, INCLUDING ALL PROVISIONS NECESSARY TO ACCOMMODATE STRUCTURAL JOINTS AND DIFFERENTIAL STRUCTURAL MOVEMENT.

4C. UNLESS SPECIFICALLY NOTED OTHERWISE, PROVIDE STAINLESS STEEL PIPE SUPPORTS THAT ARE PICKLED AND PASSIVATED FOR STAINLESS STEEL PIPING.

5. NOT ALL THE REQUIRED FITTINGS ARE SHOWN ON THE DRAWINGS. THE CONTRACTOR SHALL PROVIDE ALL THE FITTINGS SHOWN ON THE DRAWINGS AND ADDITIONAL FITTINGS AS REQUIRED FOR PIPING ARRANGEMENTS SHOWN ON THE DRAWINGS AND PER EQUIPMENT FURNISHED.
6. SUCTION AND DISCHARGE PIPING OF PUMPS SHALL BE INSTALLED AND SUPPORTED IN SUCH A MANNER SO THAT THEY SHALL NOT IMPART STRAIN ON PUMPS.
7. PIPING IS SHOWN DIAGRAMMATICALLY ON THE DRAWINGS. NOT EVERY OFFSET AND FITTING OR STRUCTURAL DIFFICULTY THAT MAY BE ENCOUNTERED HAS BEEN SHOWN ON THE DRAWINGS. THE CONTRACTOR SHALL MAKE MODIFICATIONS TO PIPING ALIGNMENT WHERE NECESSARY. MODIFICATIONS SHALL BE DONE AT NO ADDITIONAL COST TO THE OWNER AND SHALL BE DONE AFTER OWNER'S APPROVAL.
8. NOT ALL THE ITEMS ARE SHOWN IN PLANS, SECTIONS, DETAILS, SCHEMATICS, ISOMETRICS AND P & ID DRAWINGS. THE CONTRACTOR SHALL PROVIDE ALL THE ITEMS EVEN IF THEY ARE SHOWN AT ANY ONE LOCATION ON THE DRAWINGS OR SPECIFIED IN THE SPECIFICATIONS ONLY.
9. THE CONTRACTOR SHALL PROVIDE ALL THE ITEMS REQUIRED PER SPECIFICATIONS WHETHER OR NOT THEY ARE SHOWN ON THE DRAWINGS.
10. IN CASE OF A CONFLICT BETWEEN THE DRAWINGS, OBTAIN FROM THE ENGINEER DIRECTION AS TO HOW TO PROCEED.
11. OVERALL PHYSICAL SIZE OF THE EQUIPMENT SELECTED BY THE CONTRACTOR SHALL NOT EXCEED THE SIZE SHOWN ON THE DRAWINGS OR SPECIFIED IN THE SPECIFICATIONS. CLEARANCES OR DIMENSIONS SHOWN ON THE DRAWINGS SHALL BE MAINTAINED. THE CONTRACTOR SHALL INCLUDE THE COST OF THE ASSOCIATED CHANGES AND ADDITIONS INCLUDING CHANGES TO BUILDINGS AND STRUCTURE SIZES, DUE TO DEVIATION IN EQUIPMENT PHYSICAL SIZES IN HIS BID. ALL CHANGES AND ADDITIONS SHALL BE SUBMITTED FOR OWNER'S REVIEW AND SHALL BE DONE AFTER OWNER'S APPROVAL AT NO ADDITIONAL COST TO THE OWNER.
12. WARNING SIGNS SHALL BE PROVIDED PER SPECIFICATIONS ON FRONT AND BACK OF ALL REMOTELY CONTROLLED EQUIPMENT.
13. SEE STRUCTURAL DRAWINGS FOR ROOFTOP CURB AND FLASHING DETAILS.
14. SEE STRUCTURAL DRAWINGS FOR ALL EQUIPMENT BASE DETAILS.
15. INSTALL HEATING, VENTILATING AND AIR CONDITIONING EQUIPMENT AND DUCTWORK TO AVOID INTERFERENCE WITH STRUCTURE, PIPING, EQUIPMENT, CONDUIT, LIGHTING, ETC. UNLESS OTHERWISE INDICATED WITH A BOTTOM OF DUCT ELEVATION, ALL DUCTWORK SHALL BE ROUTED AS DIRECTED BY OWNER. MINIMUM HEIGHT SHALL BE 8'-0" ABOVE FINISHED FLOOR UNLESS OTHERWISE INDICATED ON THE DRAWINGS. SHOP DRAWINGS SHALL INCLUDE DUCT LAYOUT AND VERIFICATION THAT COORDINATION HAS BEEN PERFORMED WITH OTHER TRADES.
16. DUCTWORK SHALL BE FABRICATED, REINFORCED, SUPPORTED, AND SEALED FOR OPERATING PRESSURES INDICATED IN SCHEDULES FOR THE EQUIPMENT IT SERVES. ALL DUCTWORK SHALL HAVE A MINIMUM SMACNA PRESSURE CLASSIFICATION OF TWO INCHES. UNLESS NOTED OTHERWISE
17. DUCT SIZES INDICATED ARE CLEAR DIMENSIONS INSIDE THE DUCT OR DUCT LINING.
18. AIRTIGHT ACCESS DOORS SHALL BE PROVIDED TO ALLOW INSPECTION OF ALL CONTROL DAMPERS AND FILTERS. THE ACCESS DOOR SHALL BE OF A SIZE SUITABLE FOR THE DUCTWORK DIMENSIONS AND SHALL NOT BE LESS THAN 12" X 12" UNLESS OTHERWISE INDICATED.
19. THE LOCATION OF PIPING AND VALVES TO THE AIR HANDLING EQUIPMENT SHALL NOT INTERFERE WITH FILTER REMOVAL OR AIR HANDLING EQUIPMENT SERVICING.
20. BOTTOM ELEVATION OF UNIT HEATERS SHALL BE 8'-0" ABOVE FINISHED FLOOR UNLESS OTHERWISE INDICATED.
21. NOT ALL HANGERS, BRACKETS, SUPPORTS OR BRACES FOR DUCTWORK ARE INDICATED ON THE DRAWINGS. REFER TO THE SPECIFICATIONS FOR SUPPORT REQUIREMENTS NOT SHOWN ON THE DRAWINGS.
22. DUCT CONNECTIONS TO EQUIPMENT AND PIPING SIZES TO EQUIPMENT SUPPORTS SHALL BE VERIFIED AND ADJUSTED TO MATCH ACTUAL EQUIPMENT AT NO ADDITIONAL COST TO OWNER.
23. POWER ROOF VENTILATORS AND ROOF HOODS SHALL BE PROVIDED WITH 1/2" MESH ALUMINUM BIRD SCREEN OVER ALL OPENINGS UNLESS NOTED OTHERWISE.
24. ALL PIPING JOINTS SHALL BE PER PIPE SCHEDULE AND IN ACCORDANCE WITH THE SPECIFICATIONS.
25. REFER TO SPECIFICATION SECTION 01140 AND OTHER APPLICABLE SECTIONS FOR WORK RESTRICTIONS AND CONSTRAINTS.
26. VERIFY LOCATIONS, SIZES, AND CONNECTION MATERIALS OF EXISTING PIPING AND EQUIPMENT BEFORE FABRICATING NEW PIPE.
27. WHERE METER BYPASS IS NOT PROVIDED, CONTRACTOR SHALL SUPPLY ONE MATCHING SPOOL PIECE FOR EACH SIZE (DIAMETER AND LENGTH) OF MAGNETIC FLOW METER WHICH CAN BE USED TO REPLACE THE METER WHEN MAINTENANCE IS REQUIRED. EACH SPARE SPOOL PIECE SHALL BE MADE OF THE SAME MATERIAL AS THE METER AND BE CLEARLY LABELED BY SIZE AND SERVICE.
28. ALL PIPING UNDER STRUCTURES OR CONCRETE SLAB SHALL BE CONCRETE ENCASED BEYOND THE EDGE OF FOOTING TO A DIMENSION EQUAL TO THE DISTANCE FROM BOTTOM FOOTING TO TOP OF PIPE PER TYPICAL DETAIL P040, WHETHER SHOWN OR NOT.
29. ALL FLEXIBLE COUPLINGS SHALL BE RESTRAINED PER APPLICABLE TYPICAL DETAILS P110 OR P112 UNLESS SPECIFICALLY NOTED OTHERWISE. PROVIDE FLANGES OR GROOVED FLANGE ADAPTERS FOR TYPICAL DETAIL P110 WHETHER THEY ARE SHOWN ON THE DRAWINGS OR NOT.
30. THE FIRST PIPE JOINT OUT OF STRUCTURES OR OUT OF CONCRETE ENCASEMENT SHALL BE AT THE EDGE OF WALL OR WITHIN TWO (2) FEET FROM EDGE OR WALL OR END OF CONCRETE ENCASEMENT. THE NEXT TWO (2) JOINTS SHALL BE A MAXIMUM OF FOUR (4) FEET ON CENTER UNLESS OTHERWISE NOTED.
31. REFER TO DWG 01C01 FOR CATHODIC PROTECTION NOTES. CATHODIC PROTECTION NOTES APPLY TO ALL MECHANICAL AND HVAC DRAWINGS.
32. INSTALL AUTOMATIC AIR VENTS AT ALL HIGH POINTS IN THE HOT WATER PIPING SYSTEM. AVOID LOCAL HIGH POINTS IN SODIUM HYDROCHLORITE PIPING. IF UNAVOIDABLE, INSTALL DEGASSING VALVE AT EACH LOCAL HIGH POINT.
33. WHETHER SHOWN ON THE DRAWINGS OR NOT, PROVIDE PIPE INSULATION PER INSULATION SCHEDULE.
34. REFER TO P&ID DRAWINGS FOR INSTALLATION OF INSTRUMENTS.
35. PROVIDE PW HOSE BIBS EVERY 50 FEET WITHIN PROCESS BUILDINGS AND AROUND PROCESS BASINS. GROUP MULTIPLE UTILITIES (ELECTRICAL OUTLETS, POTABLE WATER, PLANT WATER, HOSE BIB, ETC.) TOGETHER AT COMMON UTILITY STATIONS, WHEN FEASIBLE.

REV	DATE	BY	DESCRIPTION
1	11/2013	HGK	ADDENDUM NO. 4

DESIGNED HGK
DRAWN NRG
CHECKED KWH
DATE SEPT 2013

REGISTERED PROFESSIONAL ENGINEER JOHN GIL KAISER No. 62686 CIVIL STATE OF CALIFORNIA 9/16/2013

carollo®

SAN LUIS OBISPO COUNTY

SAN LUIS OBISPO COUNTY
LOS OSOS WATER RECYCLING FACILITY PROJECT
GENERAL
PIPING SYMBOLS AND GENERAL NOTES

VERIFY SCALES
BAR IS ONE INCH ON ORIGINAL DRAWING
0 1"
IF NOT ONE INCH ON THIS SHEET, ADJUST SCALES ACCORDINGLY

JOB NO. 8930A.11
DRAWING NO. 00G06
SHEET NO. OF 549

PROJECT NO. 8930A.11 FILE NAME: 8930A11-00G06.dgn

LAST SAVED BY: ddonk Model: Layout1 ColorTable: gshade.ctb DesignScript: Carollo_Std_Pen_v0905.pen PlotScale: 2:1 User: PSanchez Plot Date: 07-NOV-2013 9:55:31 AM

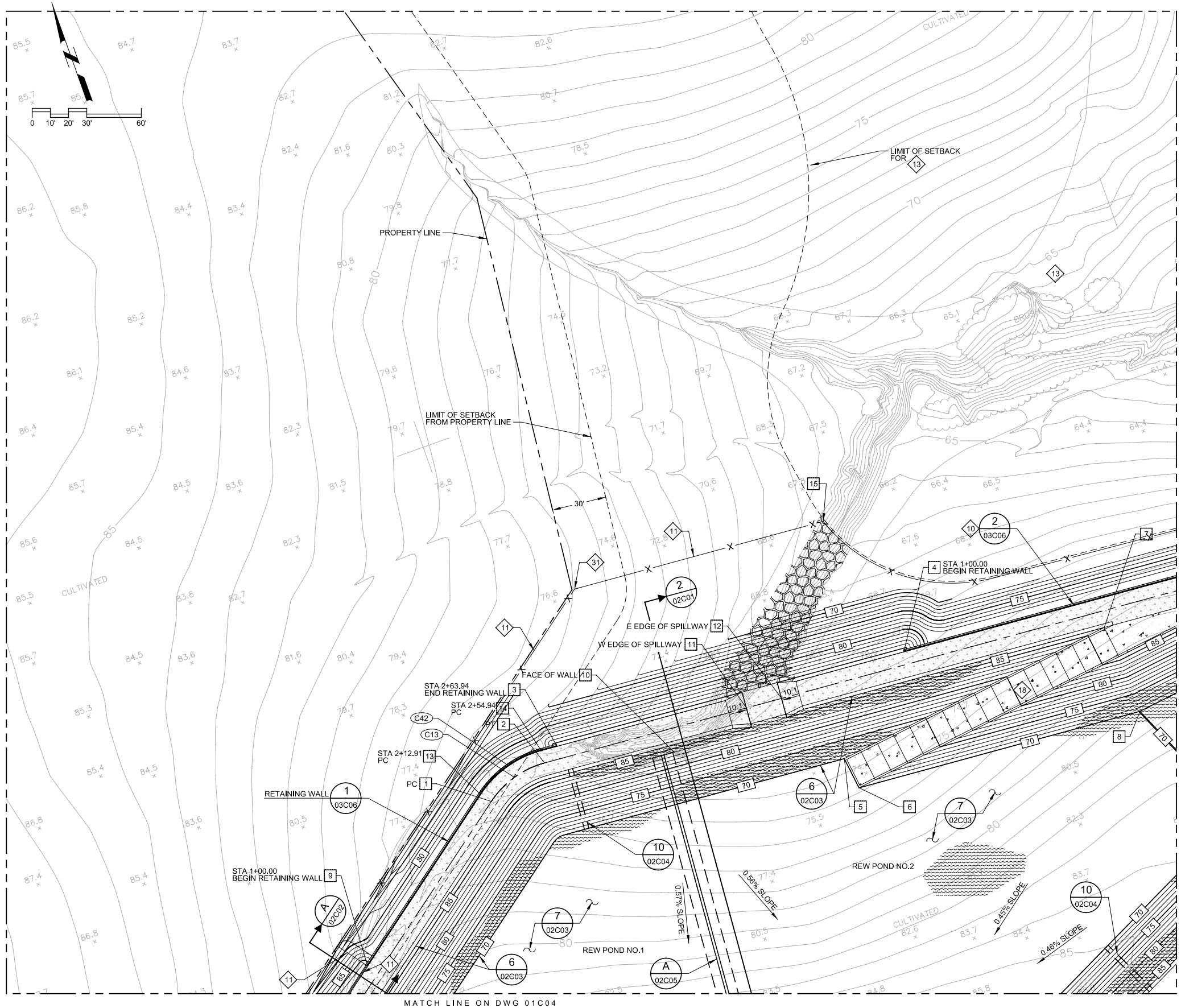

KEY NOTES

1. CONSTRUCT 4" AC OVER 16" ABC OVER RECOMPACTED SUBGRADE PER SPECIFICATIONS.
2. CONSTRUCT 6" ABC OVER 12" COMPACTED SUBGRADE PER SLO COUNTY STANDARD DRAWING A-1j.
3. CONSTRUCT 9" DEEP TYPE A GRAVEL.
4. CONCRETE CURB PER C101/TYP
5. CONCRETE ROLLED CURB PER C105/TYP
6. CONCRETE SIDEWALK PER C120/TYP, 4 FT WIDE
7. WOOD HEADER PER C130/TYP
8. CONCRETE CURB AND GUTTER PER C102/TYP
9. CATCH BASIN PER C002/TYP
10. EARTH RETAINING WALL
11. CHAIN LINK FENCE. PROVIDE FENCE GATES WHERE INDICATED. PROVIDE PRIVACY SCREEN ON FENCE ALONG ENTIRE WESTERN PLANT BOUNDARY.
12. SWALE OR CULVERT, SIZE AS INDICATED.
13. DESIGNATED ENVIRONMENTALLY SENSITIVE HABITAT AREA
14. FIRE HYDRANT PER SLO COUNTY STANDARD DRAWING W-2.
15. PAINT 4" WHITE STRIPE PER SLO COUNTY LUO CHAPTER 22.18 OR CZLUO SECTION 23.04.16x.
16. ADA PARKING STRIPING AND MARKINGS SHALL CONFORM TO THE CALIFORNIA ACCESS COMPLIANCE MANUAL SECTIONS 1109A,8.x.
17. CULVERT WITH FLARED END SECTION PER SLO COUNTY STANDARD DRAWING H-5.
18. CONCRETE RAMP PER SECTION C ON DWG 02C02. ATTACH LINER TO CONCRETE SIM TO DETAIL 12 ON 02C04. PROVIDE 1' LINER LIP EACH SIDE OF RAMP. (1)
19. NON-REMOVALBLE GUARD POST PER C160/TYP OR REMOVALBE GUARD POST PER C161/TYP. PROVIDE NON-REMOVABLE GUARD POST UNLESS NOTED OTHERWISE.
20. LIGHT FIXTURE PER ELECTRICAL DWGS.
21. 8" THICK CONCRETE SLAB WITH #5 @ 12" STEEL REINF EW AT MID DEPTH OF CONCRETE SLAB. PROVIDE CONSTR JOINT PER TYP DET S110 EVERY 30' MAX EACH DIRECTION.
22. BEGIN STANDARD ROAD SECTION PER SECTION 1/02C01.
23. 2' WIDE CROSS GUTTER PER TYP DET C104
24. FOR MANHOLE LOCATIONS SEE YARD PIPING DRAWINGS
25. WALKOUT PROVISION. TWO (2) FOR EACH REW POND, LOCATED AS SHOWN.
26. PRECAST SAFETY CURB PER TYP DET C140
27. CONCRETE SIDEWALK PER C120/TYP, 6 FT WIDE
28. CHAIN LINK GATE, 4 FT WIDE BY 6 FT HIGH
29. 4" SCH. 80 PVC DRAIN
30. BEGIN FENCE SCREEN
31. END FENCE SCREEN
32. INLINE DRAIN PER C003/TYP

GENERAL NOTES

1. THE FOLLOWING GENERAL AND KEY NOTES APPLY TO DWGS 01C02 THRU 01C05.
2. FOR GENERAL STRUCTURAL NOTES AND EARTHWORK DETAILS, SEE DWG 00G10 & 00G11.
3. FOR COORDINATE CONTROL DATA AND CURVE DATA, SEE DWG 01C20 & 01C21.
4. REMOVE EXISTING SOIL TO A DEPTH OF 3 FEET BELOW EXISTING SITE GRADES THROUGHOUT THE ENTIRE PLANT SITE. BOTTOM OF EXCAVATION SHALL BE FREE OF LOOSE OR UNSUITABLE MATERIAL. EXISTING TOP SOIL HAS BEEN DISTURBED BY PAST AGRICULTURAL ACTIVITIES. ONSITE SOILS (PREDOMINANTLY CLAY) MAY BE REUSED, PROVIDED THAT THEY MEET SPECIFICATIONS.
5. MATCH FINISHED GRADE EL WITH EXISTING GRADE AT PROPERTY LINE OR SETBACK LIMIT FROM ESHA.
6. PROVIDE A WHEEL STOP IN EACH PARKING STALL, PER C140/TYP.
7. FURNISH AND APPLY HYDROSEED TO ALL AREAS DISTURBED DURING CONSTRUCTION, BY EXCAVATION, GRADING, TRENCHING, OR OTHER ACTIVITIES. THIS AND OTHER TEMPORARY EROSION CONTROL MEASURES SHALL REMAIN IN PLACE UNTIL PERMANENT MEASURES (E.G., LANDSCAPING) ARE ESTABLISHED. PERMANENT EROSION CONTROL SHALL BE PLACED AND ESTABLISHED WITH 100% COVERAGE ON ALL DISTURBED SURFACES OTHER THAN LINED, PAVED, OR GRAVEL SURFACES, PRIOR TO FINAL INSPECTION. PERMANENT EROSION CONTROL SHALL BE FULLY ESTABLISHED PRIOR TO FINAL ACCEPTANCE. IF HYDROSEEDING IS NOT EFFECTIVE BY SEPT 2015, THEN OTHER IMMEDIATE METHODS SHALL BE IMPLEMENTED AT NO ADDITIONAL COST TO OWNER, SUCH AS EROSION CONTROL BLANKETS, OR A THREE-STEP APPLICATION OF 1) SEED, MULCH, FERTILIZER 2) BLOWN STRAW 3) TACKIFIER AND MULCH.

LEGEND

- AC PAVEMENT (1)
- SMOOTH HDPE LINER
- TYPE-A GRAVEL (3)
- AGGREGATE BASE COURSE (2)
- CONCRETE
- RIP-RAP
- LANDSCAPING

REV	DATE	BY	DESCRIPTION
1	11/2013	HGK	ADDENDUM NO. 4

DESIGNED HGK
DRAWN GAT
CHECKED RLG
DATE SEPT 2013

REGISTERED PROFESSIONAL ENGINEER HAGAN GIL KASTNER No. 62686 CIVIL STATE OF CALIFORNIA 9/16/2013

carollo

SAN LUIS OBISPO COUNTY

SAN LUIS OBISPO COUNTY
LOS OSOS WATER RECYCLING FACILITY PROJECT
CIVIL
PAVING AND GRADING - AREA "A"

VERIFY SCALES
BAR IS ONE INCH ON ORIGINAL DRAWING
0 1"
IF NOT ONE INCH ON THIS SHEET, ADJUST SCALES ACCORDINGLY

JOB NO. 8930A.11
DRAWING NO. 01C02
SHEET NO. OF 549

Plot Date: 07-NOV-2013 10:33:41 AM User: PSanchez PlotScale: 2:1 DesignScript: Carollo_Std_Pen_v0905.pen ColorTable: gshade.ctb Model: Layout1 LAST SAVED BY: ddonk

GENERAL NOTES

1. THE FOLLOWING GENERAL NOTES AND KEY NOTES APPLY TO DWGS 01C06 THRU 01C09.
2. REFER TO CONSTRUCTION SEQUENCE AND CONSTRAINTS FOR WORK IN THIS AREA. SEE DWG 01C01 FOR GENERAL YARD NOTES AND GENERAL YARD DRAWINGS LEGEND.
3. CONCRETE ENCASE ALL PIPING UNDER CONCRETE SLAB, RAMP, SIDEWALK, AND TRUCK LOADING PAD PER P040/TYP, WHETHER SHOWN OR NOT.
4. UNLESS OTHERWISE NOTED, PROVIDE TYP DET P342 FOR DIP CONNECTIONS AT WALL PENETRATIONS.
5. PROVIDE P-TRAP ON LATERALS OF GRAVITY PD, SS, AND OTHER LINES TO PREVENT RELEASE OF SEWER GAS.
6. SLOPE UP SHS PIPING CONTINUOUSLY TO DISCHARGE POINT. AVOID INTERMEDIATE HIGH POINTS ON SHS PIPING. IF UNAVOIDABLE, INSTALL DEGASSING VALVE AT EACH LOCAL HIGH POINT.
7. PROVIDE DOUBLE CONTAINMENTMENT PIPING FOR BURIED CHEMICAL AND FUEL SERVICES PER PIPE SCHEDULE.
8. UNLESS OTHERWISE NOTED, PROVIDE CORROSION MONITORING FACILITIES AT RESTRAINED DIP FLEXIBLE CONECTIONS AT WALL PENETRATIONS PER TYP DET D302.
9. SEE LANDSCAPING DRAWINGS FOR IRRIGATION PIPING AND APPURTENANCES.
10. ------- INDICATES ELECTRIAL DUCTBANKS.
11. FOR SANITARY SEWER & PLANT DRAIN SITE PIPING SCHEMATIC SEE DWG 01C17.
12. FOR MANHOLE PIPE ORIENTATION DETAILS SEE DWG 01C18.

KEY NOTES

1. INSTALL PIPE SLOPING DOWNWARD TOWARD DISCHARGE POINT.
2. CATCH BASIN PER C002/TYP. 40"x40"x60" (LxWxD).
3. DROP INLET CATCH BASIN PER C003/TYP
4. DESIGNATED ENVIRONMENTALLY SENSITIVE HABITAT AREA
5. FIRE HYDRANT PER SLO COUNTY STANDARD DRAWING W-2.
6. HOSE VALVE AND SIGN PER M273/TYP
7. CO PER P004/TYP
8. INSTALL PIPE SLOPING DOWNWARD TOWARD DISCHARGE POINT.
9. MH PER C010/TYP
10. BURIED BFV IN VALVE BOX PER P026/TYP
11. NATURAL GAS METER AND PRESSURE REGULATING VALVE TO BE INSTALLED BY UTILITY COMPANY
12. WATER STATION MONITORS PER DWG 02C03, DETAIL 8.
13. 24-INCH BF FOR FUTURE CONNECTION
14. MINIMUM 10 FEET SEPARATION BETWEEN 14-SS AND 8-FSW
15. MINIMUM 10 FEET SEPARATION BETWEEN 16-FM AND 8-FSW
16. MINIMUM 10 FEET SEPARATION BETWEEN 6-PW AND 8-FSW
17. BURIED BALL VALVE IN VALVE BOX PER P022/TYP
18. MH PER C016/TYP (1)

REV	DATE	BY	DESCRIPTION
1	11/2013	HGK	ADDENDUM NO. 4

DESIGNED ADW
DRAWN GAT
CHECKED RLG
DATE SEPT 2013

REGISTERED PROFESSIONAL ENGINEER JOHAN GIL KANG No. 62686 CIVIL STATE OF CALIFORNIA 9/16/2013

carollo

SAN LUIS OBISPO COUNTY

SAN LUIS OBISPO COUNTY
LOS OSOS WATER RECYCLING FACILITY PROJECT
CIVIL
YARD PIPING PLAN - AREA "A"

VERIFY SCALES
BAR IS ONE INCH ON ORIGINAL DRAWING
0 1"
IF NOT ONE INCH ON THIS SHEET, ADJUST SCALES ACCORDINGLY

JOB NO. 8930A.11
DRAWING NO. 01C06
SHEET NO. OF 549

PROJECT NO. 8930A.11 FILE NAME: 8930A1101C06.dgn

LAST SAVED BY: ddonk Model: Layout1 ColorTable: gshade.ctb DesignScript: Carollo_Std_Pen_v0905.pen PlotScale: 2:1 User: PSanchez Plot Date: 08-NOV-2013 10:45:23 AM

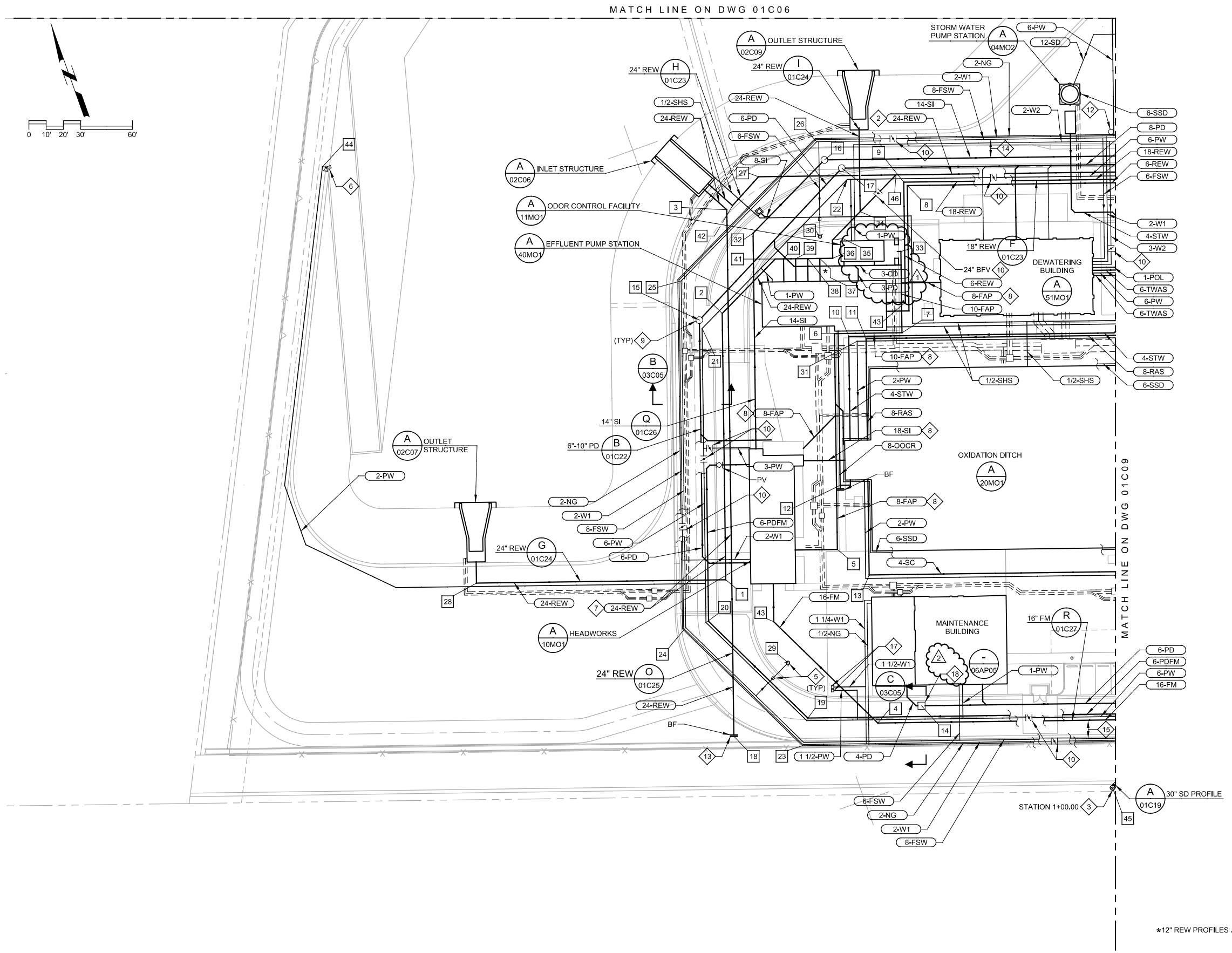

GENERAL NOTES

1. SEE DWG 01C06 FOR GENERAL NOTES.
2. SEE DWG 01C06 FOR KEY NOTES.

COORDINATE CONTROL DATA

POINT	NORTH	EAST	ELEV	STATION
1	N:2310147.44	E:5725967.14	PROFILE G	2+56.69
2	N:2310293.46	E:5726017.01	PROFILE G	4+10.99
3	N:2310349.21	E:5726039.69	PROFILE O	1+18.23
4	N:2310039.67	E:5726022.24	PROFILE R	1+22.05
5	N:2310142.26	E:5726033.95	82.16	
6	N:2310260.63	E:5726074.38	79.41	
7	N:2310247.99	E:5726111.38	79.31	
8	N:2310327.26	E:5726142.92	77.50	
9	N:2310329.81	E:5726141.65	PROFILE F	1+80.58
10	N:2310256.31	E:5726081.60	70.82	
11	N:2310251.74	E:5726090.60	71.50	
12	N:2310176.75	E:5726047.96	77.50	
13	N:2310122.16	E:5726046.35	80.50	
14	N:2310040.59	E:5726049.46	84.00	
15	N:2310294.29	E:5726003.27	PROFILE B	2+46.47 (MH-1)
16	N:2310357.39	E:5726102.68	PROFILE Q	2+84.16 (MH-2)
17	N:2310349.51	E:5726110.53	PROFILE B	3+67.11 (MH-3)
18	N:2310061.18	E:5725941.38	PROFILE O	4+23.40
19	N:2310055.98	E:5725985.05	81.00	
20	N:2310127.98	E:5725948.05	81.00	
21	N:2310289.15	E:5726003.10	77.46	
22	N:2310342.28	E:5726111.34	75.25	
23	N:2310041.94	E:5725976.71	84.83	
24	N:2310129.17	E:5725936.01	84.83	
25	N:2310319.23	E:5726000.93	82.59	
26	N:2310368.82	E:5726101.96	82.64	
27	N:2310361.01	E:5726063.44	PROFILE H	1+41.61
28	N:2310194.12	E:5725830.46	PROFILE G	1+12.25
29	N:2310090.04	E:5725985.02	FH	
30	N:2310316.38	E:5726085.34	FH	
31	N:2310252.07	E:5726085.24	79.50	
32	N:2310331.27	E:5726049.48	PROFILE Q	2+24.90
33	N:2310258.52	E:5726119.44	PROFILE F	1+10.99
34	N:2310322.21	E:5726112.11	PROFILE G	5+21.87
35	N:2310312.08	E:5726091.47	PROFILE G	4+98.88
36	N:2310302.10	E:5726088.06	PROFILE G	4+88.33
37	N:2310304.52	E:5726080.98	PROFILE G	4+80.84
38	N:2310306.78	E:5726074.35	PROFILE G	4+73.84
39	N:2310309.04	E:5726067.73	PROFILE G	4+66.84
40	N:2310311.30	E:5726061.10	PROFILE G	4+59.84
41	N:2310312.86	E:5726056.55	PROFILE G	4+55.03
42	N:2310349.21	E:5726039.69	PROFILE O	1+18.23
43	N:2310115.18	E:5725985.18	PROFILE R	1+22.05
44	N:2310451.32	E:5725827.43	82.80	
45	N:2309958.66	E:5726137.74	PROFILE A	1+00
46	N:2310335.29	E:5726138.76	PROFILE G	

*12" REW PROFILES J, K, L, M ON 01C25

REV	DATE	BY	DESCRIPTION
2	11/2013	HGK	ADDENDUM NO. 4
1	11/2013	HGK	ADDENDUM NO. 3

DESIGNED ADW
DRAWN GAT
CHECKED RLG
DATE SEPT 2013

REGISTERED PROFESSIONAL ENGINEER RAMAN GIL KANG No. 62686 CIVIL STATE OF CALIFORNIA 9/16/2013

carollo

SAN LUIS OBISPO COUNTY

SAN LUIS OBISPO COUNTY

LOS OSOS WATER RECYCLING FACILITY PROJECT

CIVIL

YARD PIPING PLAN - AREA "C"

VERIFY SCALES
BAR IS ONE INCH ON ORIGINAL DRAWING
0 1"
IF NOT ONE INCH ON THIS SHEET, ADJUST SCALES ACCORDINGLY

JOB NO. 8930A.11
DRAWING NO. 01C08
SHEET NO. OF 549

PROJECT NO. 8930A.11 FILE NAME: 8930A1101C08.dgn

Plot Date: 08-NOV-2013 10:36:49 AM User: PSanchez PlotScale: 2:1 DesignScript: Carollo_Std_Pen_v0905.pen ColorTable: gshade.ctb Model: Layout1 LAST SAVED BY: ngriffith

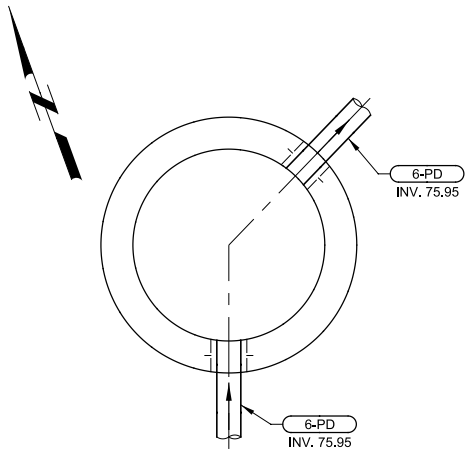

1 MH-1 DETAIL
01C08 SCALE: 1/2" = 1'-0"
FILE: 8930A11-01-C-0401

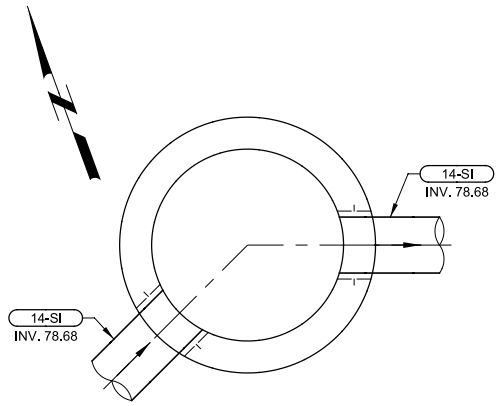

2 MH-2 DETAIL
01C08 SCALE: 1/2" = 1'-0"
FILE: 8930A11-01-C-0401

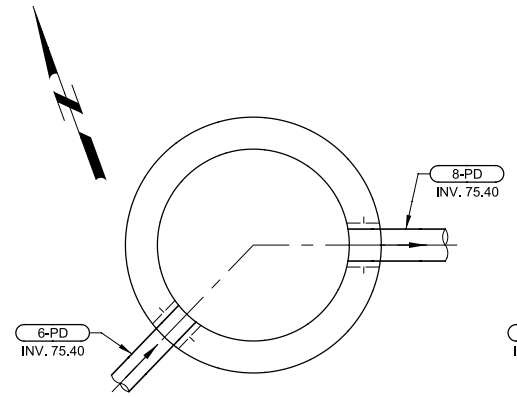

3 MH-3 DETAIL
01C08 SCALE: 1/2" = 1'-0"
FILE: 8930A11-01-C-0401

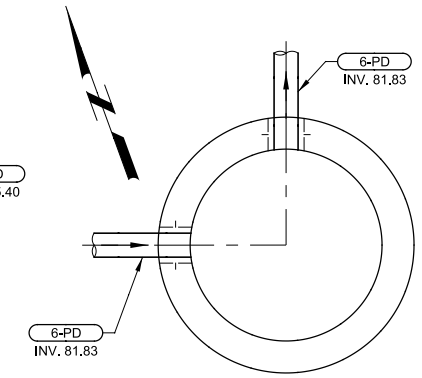

4 MH-4 DETAIL
01C09 SCALE: 1/2" = 1'-0"
FILE: 8930A11-01-C-0401

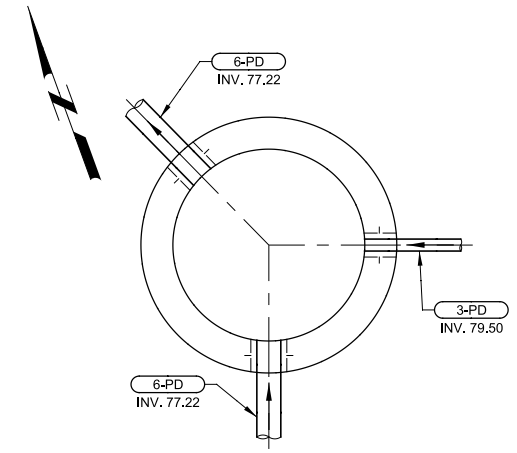

5 MH-5 DETAIL
01C09 SCALE: 1/2" = 1'-0"
FILE: 8930A11-01-C-0401

GENERAL NOTES

1. FOR GENERAL STRUCTURAL NOTES SEE DWG 00G10.
2. FOR EARTHWORK DETAILS SEE 00G11 TYPICAL SECTION A.
3. FOR GENERAL CIVIL NOTES SEE 01C01.
4. PROVIDE TWO RESTRAINED PIPE JOINTS OUTSIDE OF MANHOLE AT DISTANCES INDICATED ON P342/TYP. (1)

KEY NOTES

(1) INLINE CHECK VALVE

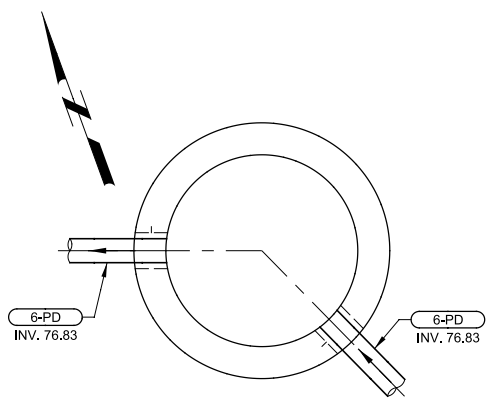

6 MH-6 DETAIL
01C09 SCALE: 1/2" = 1'-0"
FILE: 8930A11-01-C-0401

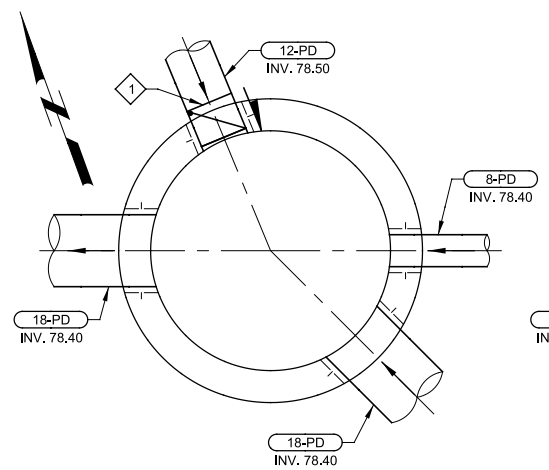

7 MH-7 DETAIL
01C09 SCALE: 1/2" = 1'-0"
FILE: 8930A11-01-C-0401

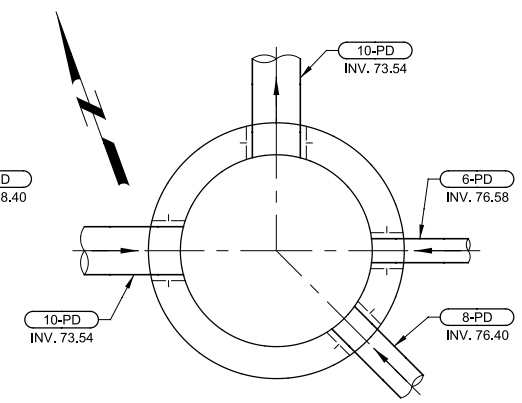

8 MH-8 DETAIL
01C09 SCALE: 1/2" = 1'-0"
FILE: 8930A11-01-C-0401

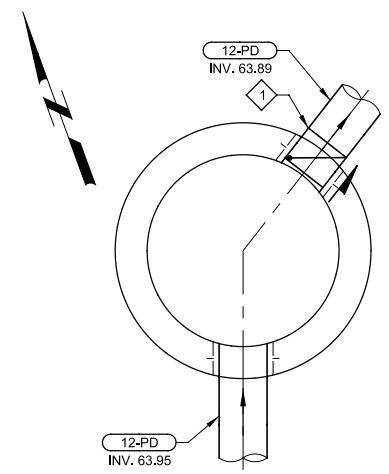

9 MH-9 DETAIL
01C09 SCALE: 1/2" = 1'-0"
FILE: 8930A11-01-C-0401

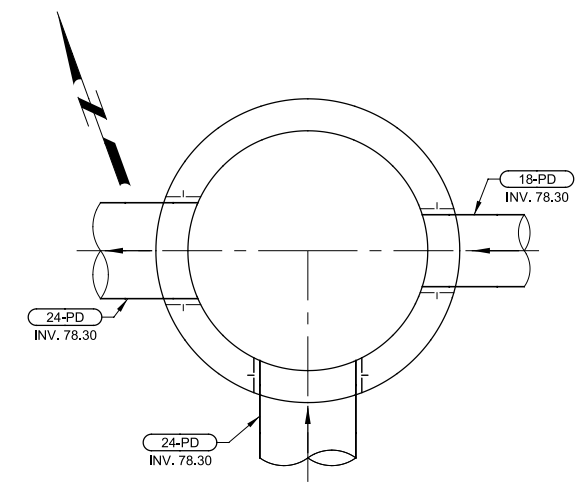

10 MH-10 DETAIL
01C09 SCALE: 1/2" = 1'-0"
FILE: 8930A11-01-C-0401

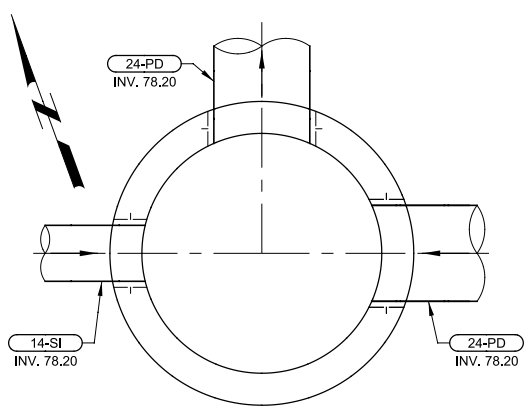

11 MH-11 DETAIL
01C09 SCALE: 1/2" = 1'-0"
FILE: 8930A11-01-C-0401

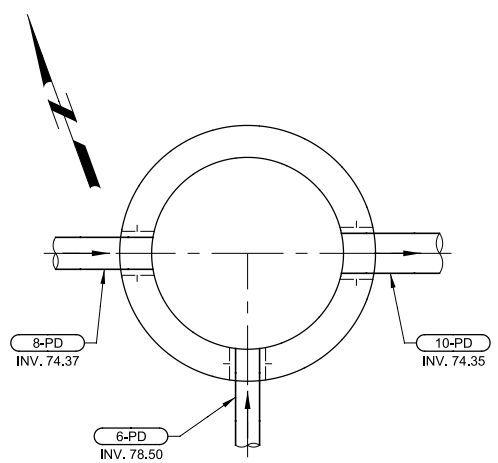

12 MH-12 DETAIL
01C09 SCALE: 1/2" = 1'-0"
FILE: 8930A11-01-C-0401

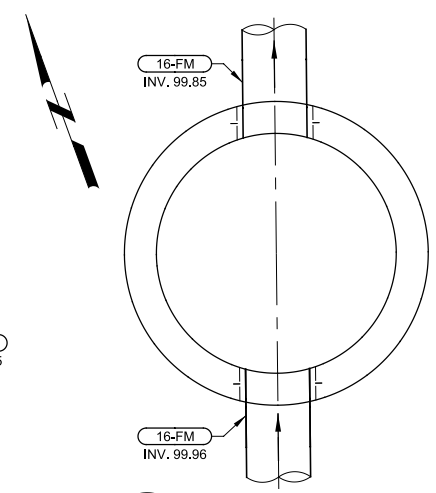

13 MH-13 DETAIL
01C11 SCALE: 1/2" = 1'-0"
FILE: 8930A11-01-C-0401

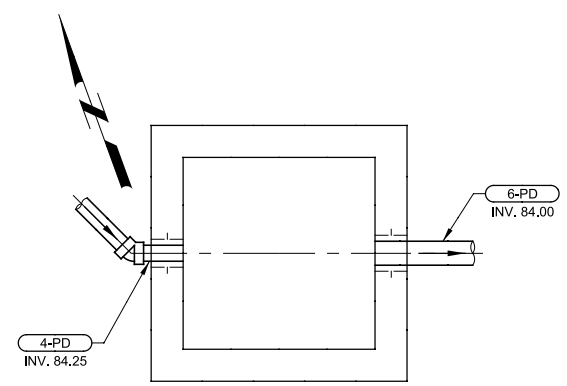

14 MH-14 DETAIL
01C08 SCALE: 1/2" = 1'-0"
FILE: 8930A11-01-C-0401

REV	DATE	BY	DESCRIPTION
1	11/2013	HGK	ADDENDUM NO. 4

DESIGNED DLM
DRAWN NRG
CHECKED HGK
DATE SEPT 2013

REGISTERED PROFESSIONAL ENGINEER HANS GIL KASTNER No. 62686 CIVIL STATE OF CALIFORNIA 9/16/2013

carollo

SAN LUIS OBISPO COUNTY

SAN LUIS OBISPO COUNTY
LOS OSOS WATER RECYCLING FACILITY PROJECT
CIVIL
MANHOLE PIPE ORIENTATION DETAILS

VERIFY SCALES
BAR IS ONE INCH ON ORIGINAL DRAWING
0 1"
IF NOT ONE INCH ON THIS SHEET, ADJUST SCALES ACCORDINGLY

JOB NO. 8930A.11
DRAWING NO. 01C18
SHEET NO. OF 549

PROJECT NO. 8930A.11 FILE NAME: 8930A1101C18.dgn

LAST SAVED BY: psanchez Model: Layout1 ColorTable: gshade.ctb DesignScript: Carollo_Std_Pen_v0905.pen PlotScale: 2:1 User: PSanchez Plot Date: 08-NOV-2013 1:14:32 PM

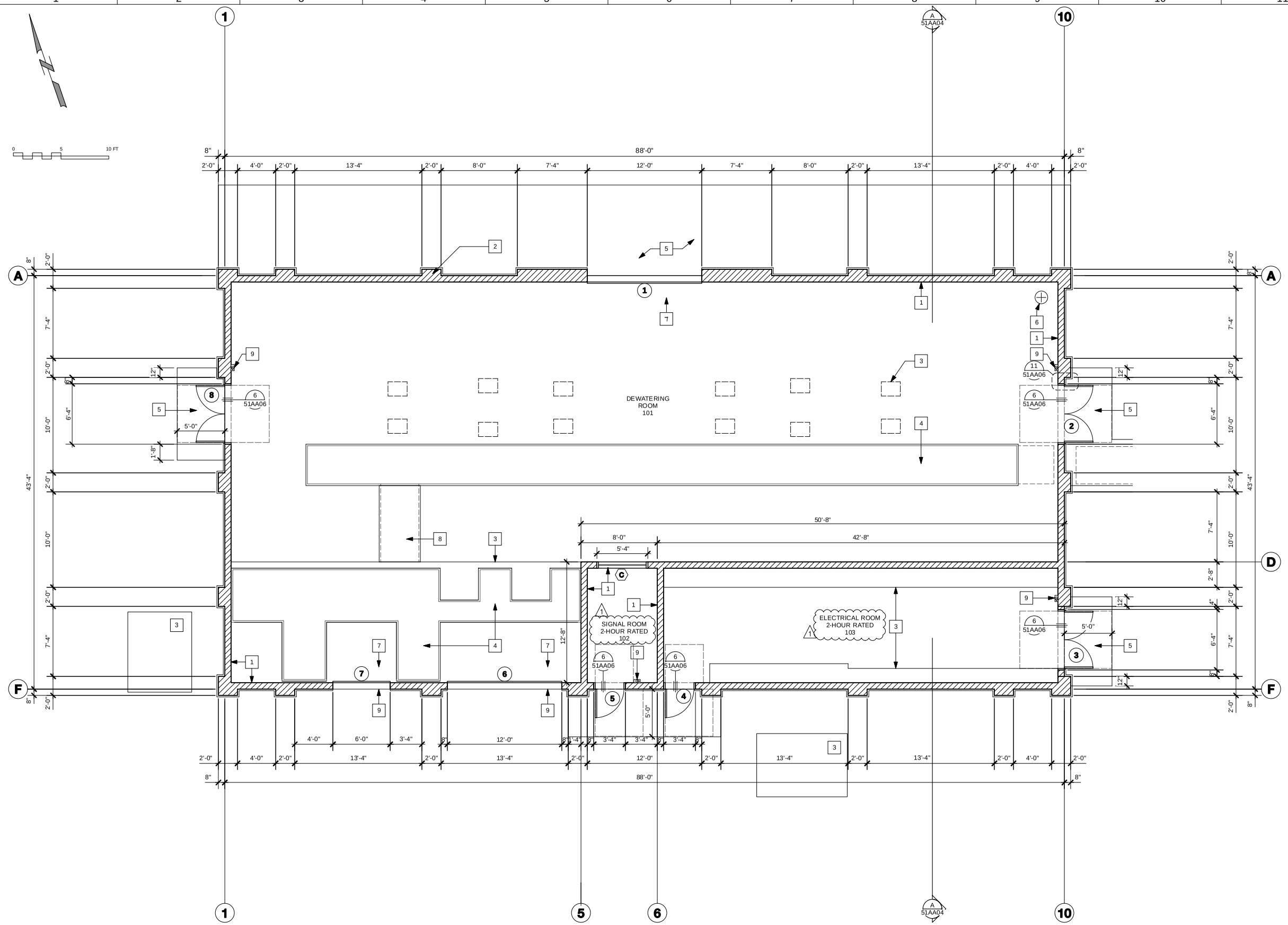

1 **FLOOR PLAN**
SCALE: 3/16" = 1' - 0"

FLOOR PLAN GENERAL NOTES

1. Contractor shall provide a portable 2A10BC fire extinguisher on site during construction.
2. Fire extinguishers shall be 2A10BC in cabinet (Larsen's; Vertical Duo Stainless Steel w/ Lock). Mount at +48" to centerline of valve handle. Refer to floor plan for locations.
3. See Sheet 05AA09 for Door Schedule.
4. See Sheet 05AA10 for Window Schedule.

FLOOR PLAN REFERENCE NOTES

1. 8" CMU WALL
2. 16" CMU WALL/PILASTER
3. CONCRETE EQUIP PADS, SEE STRUCTURAL PLANS
4. METAL GRATES, SEE STRUCTURAL PLANS
5. CONCRETE SLAB, SEE STRUCTURAL PLANS
6. FIRE SPRINKLER RISER
7. OVERHEAD COILING DOOR
8. STEEL PLATE COVER, SEE STRUCTURAL PLANS
9. 8" CONCRETE CURB
9. FIRE EXTINGUISHER, REFER TO GENERAL NOTES

BUILDING DATA

BUILDING AREA:	3,461 SF
CONSTRUCTION TYPE:	V-B SPRINKLERED
TRUE BLDG HEIGHT LIMIT:	+30'-0"
OCCUPANCY:	F-2

REV	DATE	BY	DESCRIPTION
1	11/2013	AE	ADDENDUM NO.4

DESIGNED KH
DRAWN IW
CHECKED FFG
DATE SEPTEMBER 2013

LICENSED ARCHITECT STEVEN D. PULTS No. C-8671 REN. 06-30-15 STATE OF CALIFORNIA

PULTS Steven D. Pults, AIA & Associates, LLP

carollo

SAN LUIS OBISPO COUNTY

SAN LUIS OBISPO COUNTY
LOS OSOS WATER RECYCLING FACILITY PROJECT
ARCHITECTURAL
DEWATERING BUILDING
FLOOR PLAN

VERIFY SCALES
BAR IS ONE INCH ON ORIGINAL DRAWING
0 1"
IF NOT ONE INCH ON THIS SHEET, ADJUST SCALES ACCORDINGLY

JOB NO. 8930A.11
DRAWING NO. 51AA01
SHEET NO. XXX OF XXX

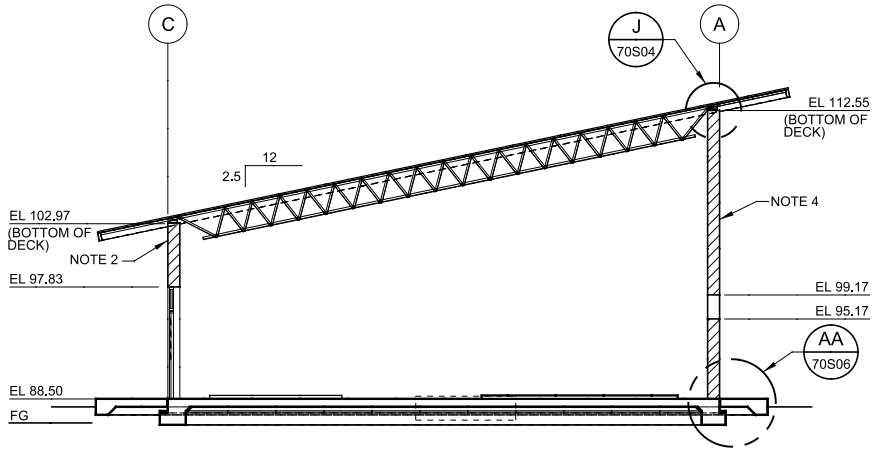

C SECTION
70S01 70S02
SCALE: 1/8" = 1'-0"
FILE: 8930A1170S301

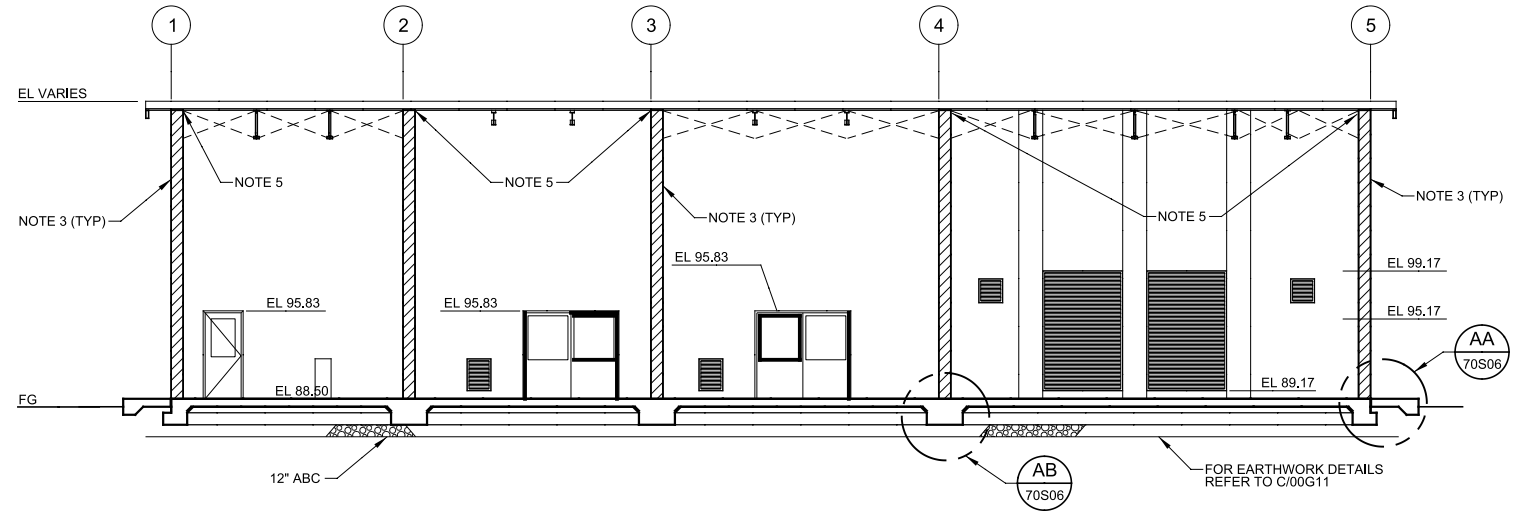

F SECTION
70S01 70S02
SCALE: 1/8" = 1'-0"
FILE: 8930A1170S304

GENERAL NOTES:

1. FOR STRUCTURAL GENERAL NOTES AND EARTHWORK DETAILS SEE DRAWINGS 00G10 & 00G11.
2. PROVIDE #5 @ 24" V EF
   2-#5 @ 24" H
3. PROVIDE #6 @ 32" V EF
   2-#5 @ 24" H. ENSURE HORIZ REINF ALIGNS W/ REINF @ COMMON CORNERS.
4. PROVIDE #6 @ 24" V EF
   2-#6 @ 24" H
5. SLOPE (2) - #6 AND DECK ANCHOR PL 1/2x6" TO PITCH OF ROOF. SEE TYPICAL DETAIL S734/TYP.
6. IN ADDITION TO TYP WALL REINF, PROVIDE (2)-#6 CONTINUOUS IN BOND BM @ TOP OF WALL.

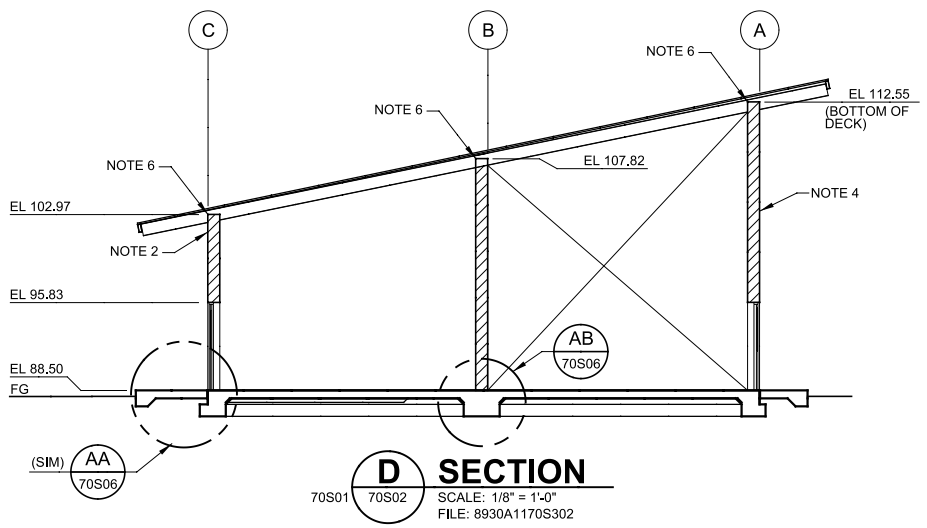

D SECTION
70S01 70S02
SCALE: 1/8" = 1'-0"
FILE: 8930A1170S302

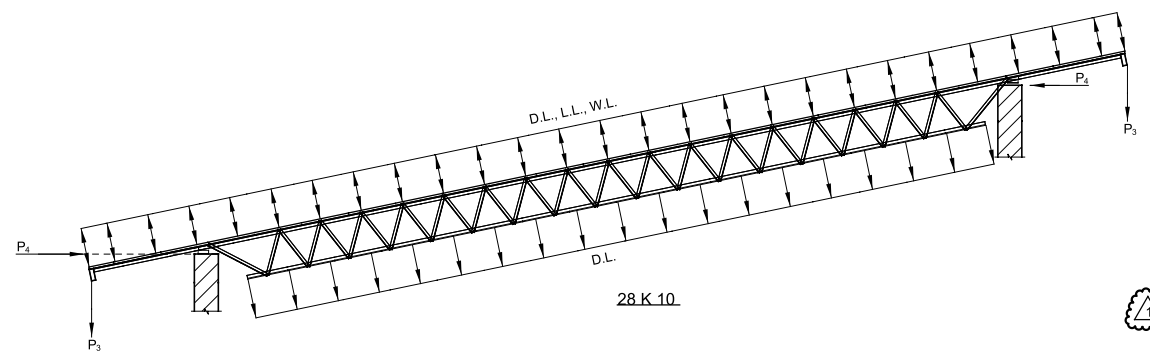

28 K 10

28 K 10 DESIGN LOADS (LBS / L.F.)					
	DEAD	LIVE	WIND DOWN	WIND UP	P_4 AXIAL
BOTTOM CHORD	75	-	-	-	-
TOP CHORD	110	130	60	150	1500
OVERHANG	110	130	110	260	-

NOTES:
1. WEIGHT OF JOIST MUST BE ADDED TO LOADS SHOWN.
2. DEPTH OF JOIST EXTENSION SHOULD NOT EXCEED 8".
3. P_4 COMPRESSIVE SEISMIC AXIAL LOAD (NON-CONCURRENT @ EA END).

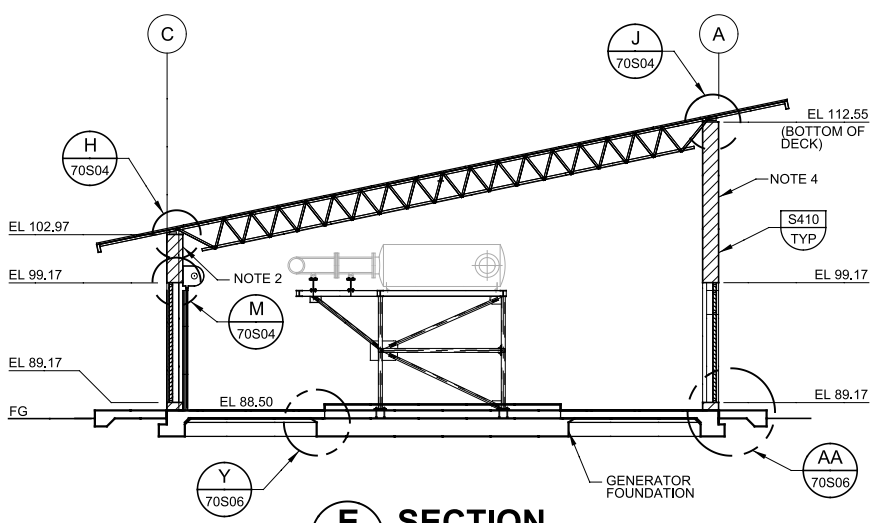

E SECTION
70S01 70S02
SCALE: 1/8" = 1'-0"
FILE: 8930A1170S303

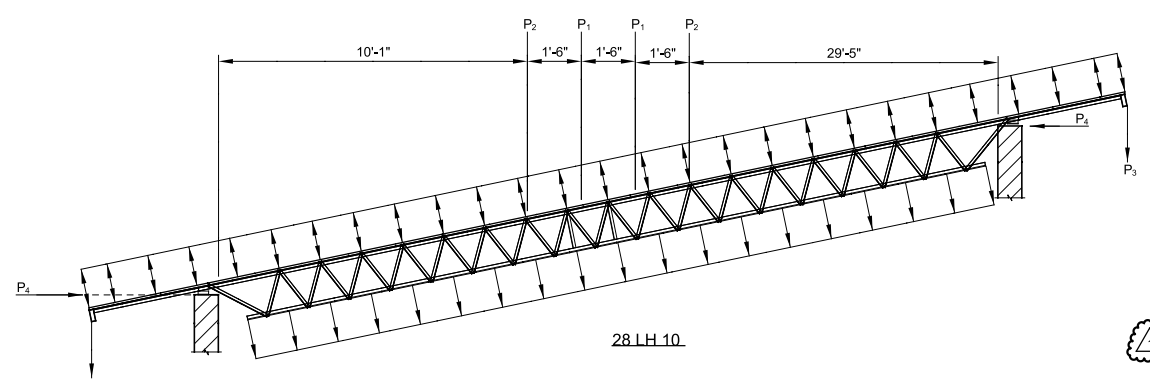

28 LH 10

28 LH 10 DESIGN LOADS								
	DEAD					LIVE LBS / FT	WIND DOWN LBS / FT	WIND UP LBS / FT
	(W) LBS / FT	(P) LBS						
		P_1	P_2	P_3	P_4			
BOTTOM CHORD	75	-	-	-	-	-	-	-
TOP CHORD	110	1,100	900	2000	1500	130	60	150
OVERHANG	110	-	-	-	-	130	110	260

NOTES:
1. WEIGHT OF JOIST MUST BE ADDED TO LOADS SHOWN.
2. DEPTH OF JOIST EXTENSION SHOULD NOT EXCEED 8".
3. P_4 COMPRESSIVE AXIAL LOAD (NON-CONCURRENT @ EA END).
4. FIFTY PERCENT OF LOAD P_1 IS SUPPORTED @ TOP & BOTTOM JOINTS. SEE DETAIL R/70S05.

G JOISTS DESIGN LOADS
-
SCALE: NTS
FILE: 8930A1170S03

REV	DATE	BY	DESCRIPTION
1	11/2013	HGK	ADDENDUM NO. 4

DESIGNED LS
DRAWN TVN/PLN
CHECKED WTT
DATE SEPT 2013

REGISTERED PROFESSIONAL ENGINEER LOUIS R. SCHIANA No. 47810 CIVIL STATE OF CALIFORNIA 9/16/2013

carollo®

SAN LUIS OBISPO COUNTY

SAN LUIS OBISPO COUNTY
LOS OSOS WATER RECYCLING FACILITY PROJECT
STRUCTURAL
ELECTRICAL BUILDING SECTIONS

VERIFY SCALES
BAR IS ONE INCH ON ORIGINAL DRAWING
0 1"
IF NOT ONE INCH ON THIS SHEET, ADJUST SCALES ACCORDINGLY

JOB NO. 8930A.11
DRAWING NO. 70S03
SHEET NO. OF 549

PROJECT NO. 8930A.11 FILE NAME: 8930A1170S03.dgn

Plot Date: 07-NOV-2013 2:18:07 PM User: PSanchez Model: Layout1 ColorTable: gshade.ctb DesignScript: Carollo_Std_Pen_v0905.pen PlotScale: 2:1 LAST SAVED BY: psanchez

Model: Layout1 ColorTable: gshade.ctb DesignScript: Carollo_Std_Pen_v0905.pen PlotScale: 2:1 User: PSanchez Plot Date: 07-NOV-2013 11:11:30 AM LAST SAVED BY: ngriffith

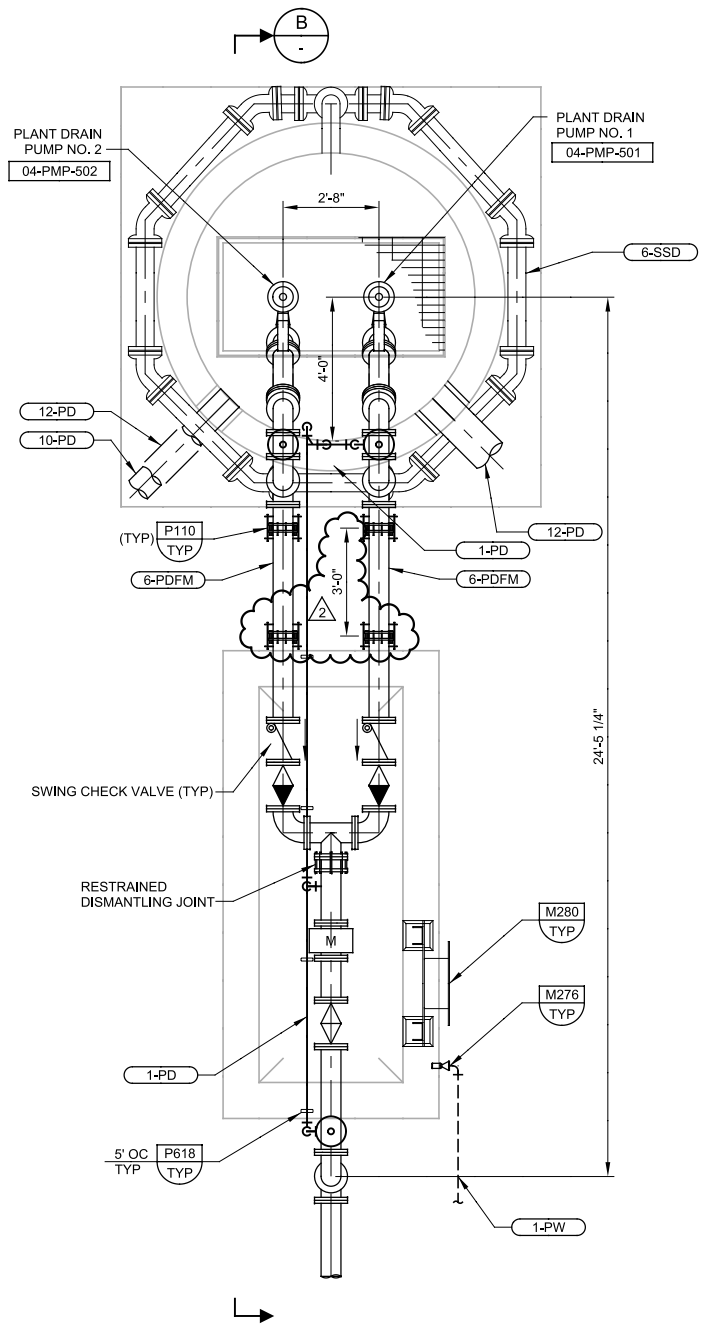

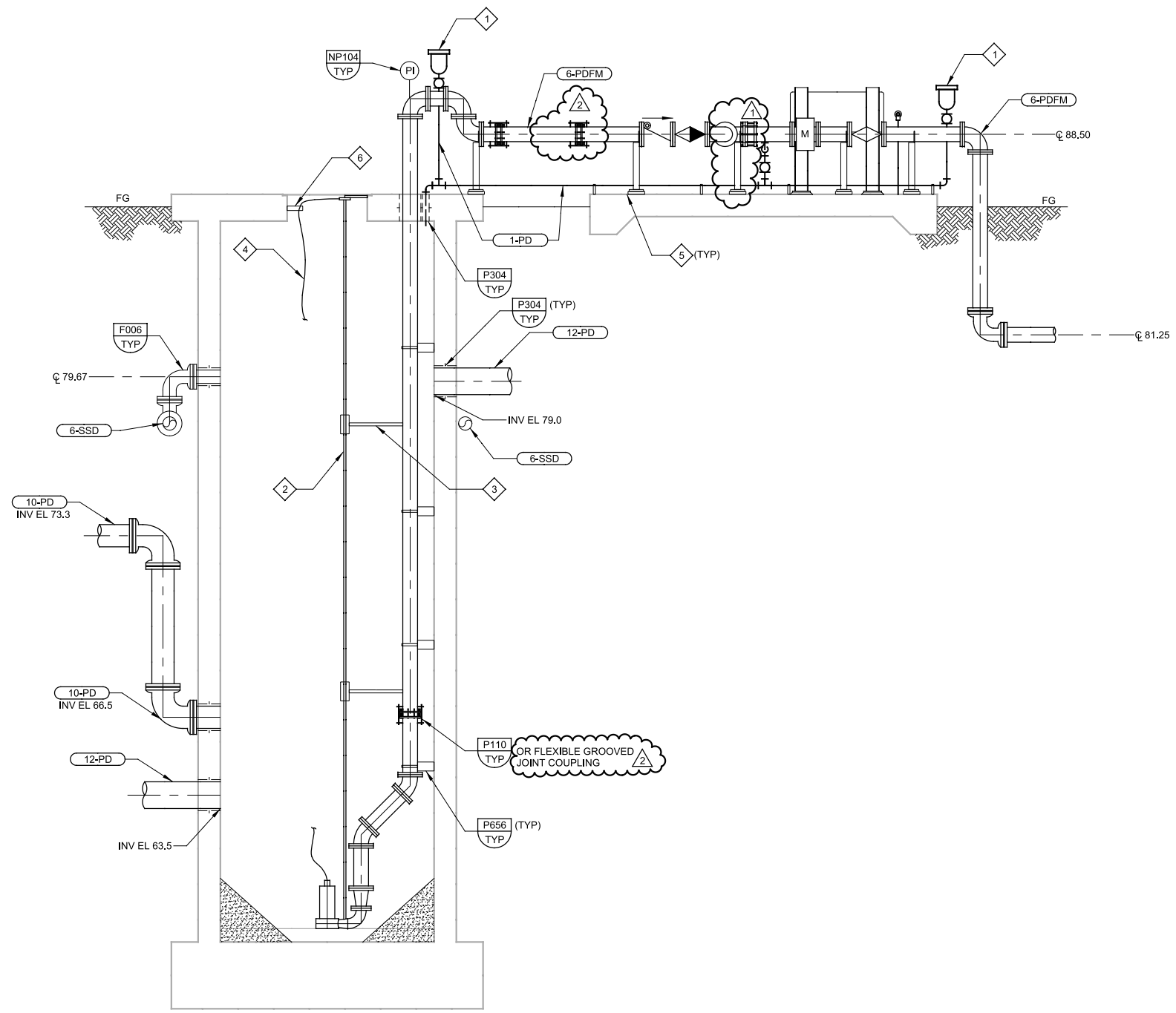

A PLAN
SCALE: 3/8" = 1'-0"
FILE: 8930A1104M0101

B SECTION
SCALE: 3/8" = 1'-0"
FILE: 8930A1104M0301

GENERAL NOTES

1. FOR GENERAL MECHANICAL NOTES, SEE SHEET 00G06.
2. FOR YARD PIPING CONTINUATION, SEE CIVIL DRAWINGS.
3. REFER TO ELECTRICAL DRAWINGS FOR INSTALLATION OF INSTRUMENTATION.

KEY NOTES

1. 1-INCH SEWAGE COMBINATION AIR VALVE PER TYPICAL DETAIL P240. ROUTE SST VENT LINE ALONG DISCHARGE PIPE TO WET WELL.
2. GUIDE RAIL.
3. INTERMEDIATE RAIL SUPPORT AS REQUIRED PER 11312K.
4. SST LIFT CHAIN.
5. PIPE SUPPORT PER P624 OR P626.
6. CABLE/CHAIN HOLDER.

REV	DATE	BY	DESCRIPTION
2	11/2013	HGK	ADDENDUM NO. 4
1	11/2013	HGK	ADDENDUM NO. 3

DESIGNED ADW
DRAWN DBJ
CHECKED TPY
DATE SEPT 2013

REGISTERED PROFESSIONAL ENGINEER ANDREW D. WEBNER No. 5948 CIVIL STATE OF CALIFORNIA 9/16/2013

carollo®

SAN LUIS OBISPO COUNTY

SAN LUIS OBISPO COUNTY
LOS OSOS WATER RECYCLING FACILITY PROJECT
MECHANICAL
PLANT DRAIN PUMP STATION
PLAN AND SECTION

VERIFY SCALES
BAR IS ONE INCH ON ORIGINAL DRAWING
0 1"
IF NOT ONE INCH ON THIS SHEET, ADJUST SCALES ACCORDINGLY

JOB NO. 8930A.11
DRAWING NO. 04M01
SHEET NO. OF 549

Model: Layout1 ColorTable: gshade.ctb DesignScript: Carollo_Std_Pen_v0905.pen PlotScale: 2:1 User: PSanchez Plot Date: 07-NOV-2013 11:19:00 AM
LAST SAVED BY: ddonk

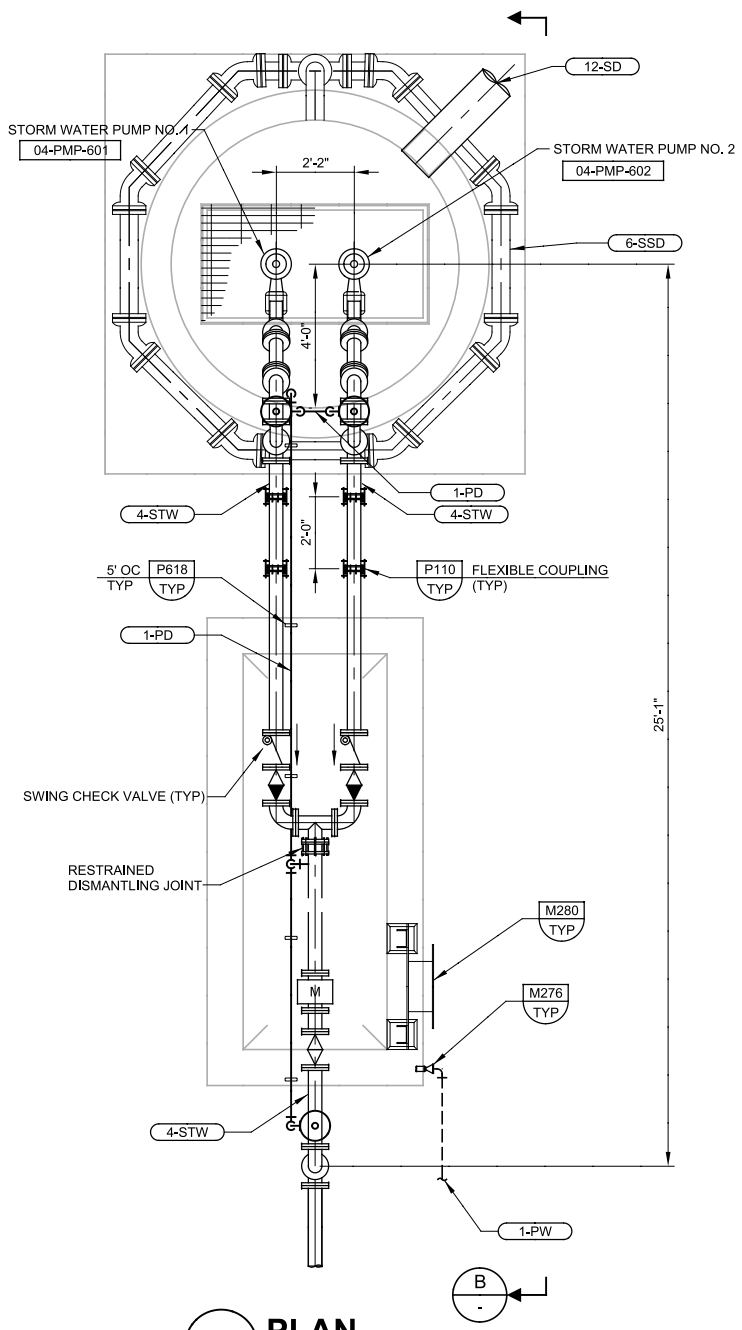

A PLAN

SCALE: 3/8" = 1'-0"
FILE: 8930A1104M0101

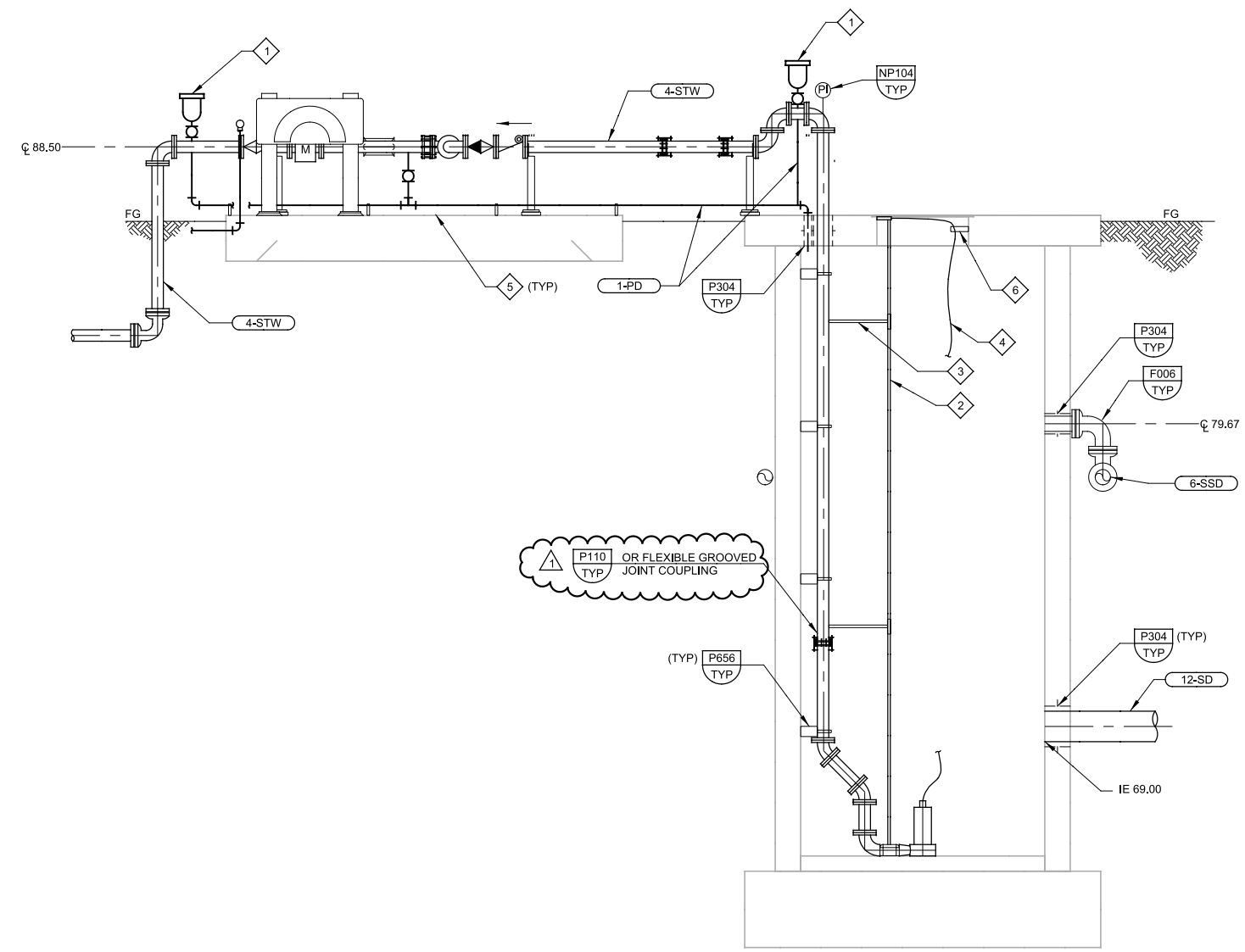

B SECTION

SCALE: 3/8" = 1'-0"
FILE: 8930A1104M0303

GENERAL NOTES

1. FOR GENERAL MECHANICAL NOTES, SEE SHEET 00G06.
2. FOR YARD PIPING CONTINUATION, SEE CIVIL DRAWINGS.
3. REFER TO ELECTRICAL DRAWINGS FOR INSTALLATION OF INSTRUMENTATION.

KEY NOTES

1. 1-INCH SEWAGE COMBINATION AIR VALVE PER TYPICAL DETAIL P240. ROUTE SST VENT LINE ALONG DISCHARGE PIPE TO WET WELL.
2. GUIDE RAIL.
3. INTERMEDIATE RAIL SUPPORT AS REQUIRED PER 11312K.
4. SST LIFT CHAIN.
5. PIPE SUPPORT PER P624 OR P626.
6. CABLE/CHAIN HOLDER.

REV	DATE	BY	DESCRIPTION
1	11/2013	HGK	ADDENDUM NO. 4

DESIGNED ADW
DRAWN DBJ
CHECKED TPY
DATE SEPT 2013

REGISTERED PROFESSIONAL ENGINEER ANDREW D. WINTER No. 75948 CIVIL STATE OF CALIFORNIA

SAN LUIS OBISPO COUNTY

SAN LUIS OBISPO COUNTY
LOS OSOS WATER RECYCLING FACILITY PROJECT
MECHANICAL
STORM WATER PUMP STATION
PLAN AND SECTION

VERIFY SCALES
BAR IS ONE INCH ON ORIGINAL DRAWING
0 1"
IF NOT ONE INCH ON THIS SHEET, ADJUST SCALES ACCORDINGLY

JOB NO. 8930A.11
DRAWING NO. 04M02
SHEET NO. OF 549

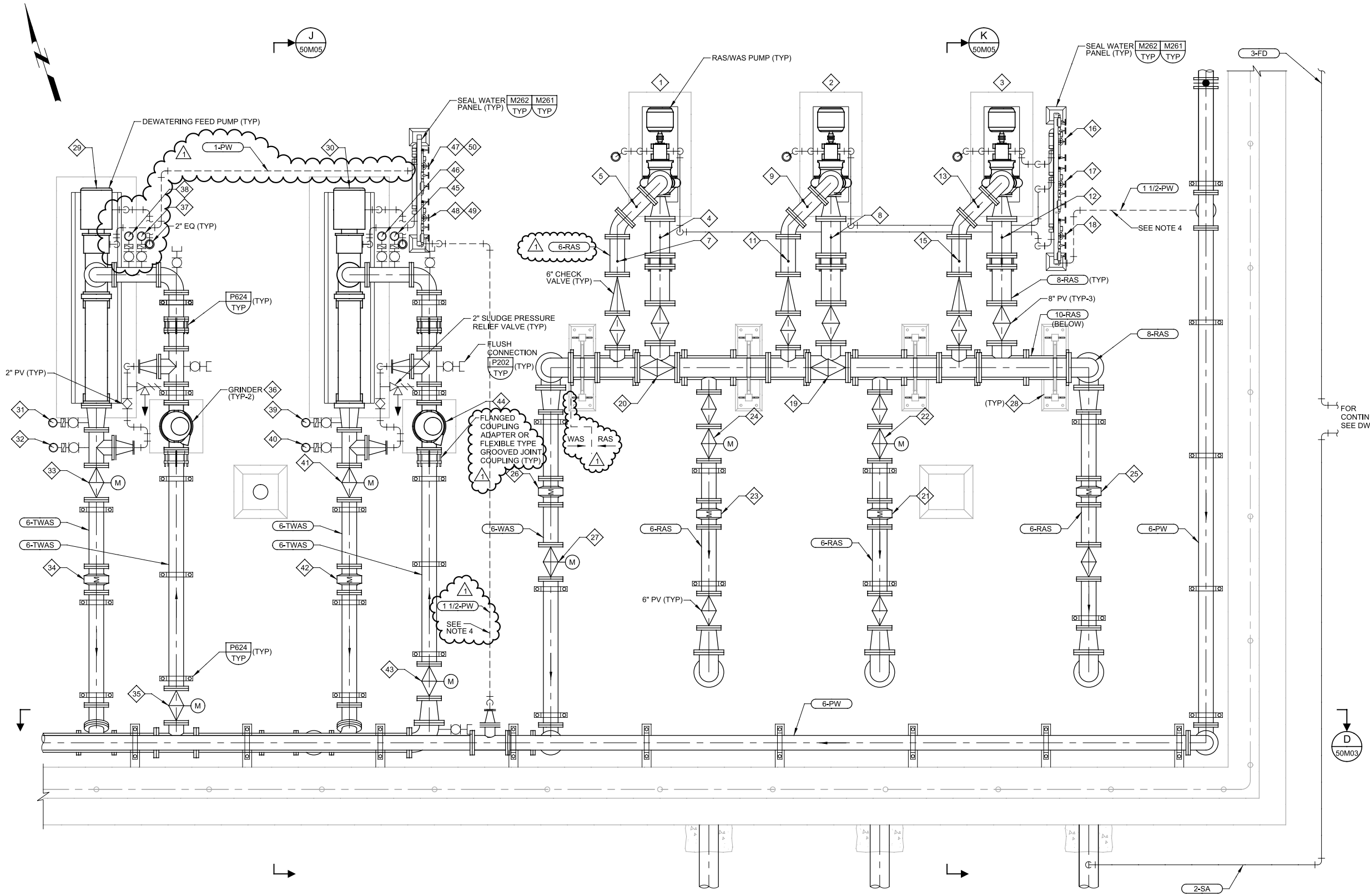

B PARTIAL PLAN

50M01

SCALE: 1/2" = 1'-0"

FILE: 8930A11_50_M_0101

GENERAL NOTES

1. REFER TO DRAWING 50M01 FOR ADDITIONAL GENERAL NOTES.
2. REFER TO DRAWING 50M04 FOR DRAINAGE THIS AREA.
3. RUN SEAL WATER PIPE FROM SEAL WATER PANEL TO EACH PUMP. RUN PIPE UNDER SLAB AS REQUIRED TO PUMP SEAL CONNECTIONS AT INLET AND OUTLET. ROUTE PIPE TO EQUIPMENT DRAIN AT PUMP.
4. RUN PW PIPE TO SEAL WATER PANEL CONNECTION UNDER SLAB AND CONCRETE ENCASE PER P040 / TYP.

KEY NOTES

1	RAS PUMP 50-PMP-121	27	50-EAM-127
2	RAS PUMP 50-PMP-122	28	PIPE RACK PER DETAIL 1/50S01
3	RAS PUMP 50-PMP-123	29	50-PMP-423
4	50-PI-121	30	50-PMP-427
5	50-PI-121B	31	50-PI-423B
6	NOT USED	32	50-PSH-423
7	50-PSH-121	33	50-VAL-424
8	50-PI-122	34	50-FE-425
9	50-PI-122B	35	50-VAL-421
10	NOT USED	36	50-GRI-422
11	50-PSH-122	37	50-PI-423A
12	50-PI-123	38	50-ASL-423
13	50-PI-123B	39	50-PI-427B
14	NOT USED	40	50-PSH-427
15	50-PSH-123	41	50-VAL-428
16	50-SV-121	42	50-FE-429
17	50-SV-122	43	50-VAL-425
18	50-SV-123	44	50-GRI-426
19	50-EDR-128	45	50-PI-427A
20	50-EDR-129	46	50-ASL-427
21	50-FE-125	47	50-SV-423
22	50-EAM-125	48	50-SV-427
23	50-FE-124	49	50-FSL-427
24	50-EAM-124	50	50-FSL-423
25	50-FE-126		
26	50-FE-127		

REV	DATE	BY	DESCRIPTION
1	11/2013	HGK	ADDENDUM NO. 4

DESIGNED JBG / KAK
DRAWN NRG
CHECKED SGS
DATE SEPT 2013

REGISTERED PROFESSIONAL ENGINEER KRISTIL ANTOUN KIRKOUZ No. 28941 MECHANICAL STATE OF CALIFORNIA
9/16/2013

carollo®

SAN LUIS OBISPO COUNTY

SAN LUIS OBISPO COUNTY
LOS OSOS WATER RECYCLING FACILITY PROJECT
MECHANICAL
SLUDGE STORAGE TANKS
PARTIAL PLAN

VERIFY SCALES
BAR IS ONE INCH ON ORIGINAL DRAWING
0 1"
IF NOT ONE INCH ON THIS SHEET, ADJUST SCALES ACCORDINGLY

JOB NO. 8930A.11
DRAWING NO. 50M02
SHEET NO. OF 549

PROJECT NO. 8930A.11 FILE NAME: 8930A11-50M02.dgn

Plot Date: 07-NOV-2013 11:55:29 AM User: PSanchez Model: Layout1 ColorTable: gshade.ctb DesignScript: Carollo_Std_Pen_v0905.pen PlotScale: 2:1 LAST SAVED BY: psanchez

GENERAL NOTES

1. REFER TO DRAWING 50M01 FOR ADDITIONAL GENERAL NOTES.

KEY NOTES

1. AIR SUPPLIER DIFFUSER INSTALLATION SHALL PER MANUFACTURER RECOMMENDATIONS AND SPECIFICATION.
2. ROUTE AND SUPPORT DRAIN LINES FROM SEWAGE RELEASE VALVES TO NEAREST DRAIN IN THIS AREA.

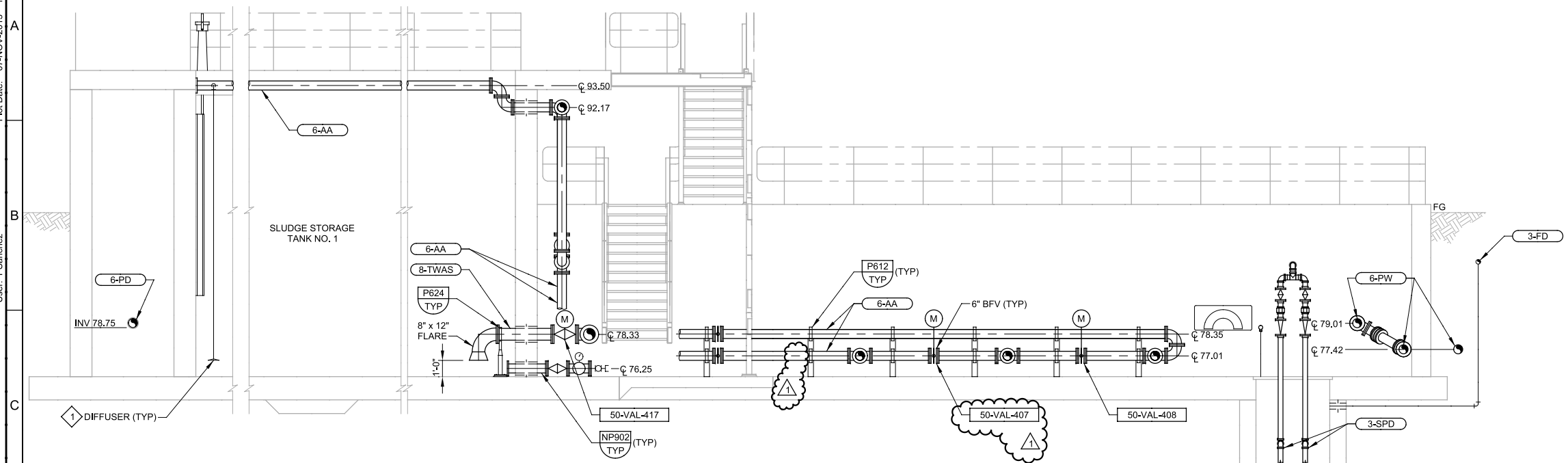

C SECTION
50M01
SCALE: 1/4" = 1'-0"
FILE: 8930A11_50_M_0302

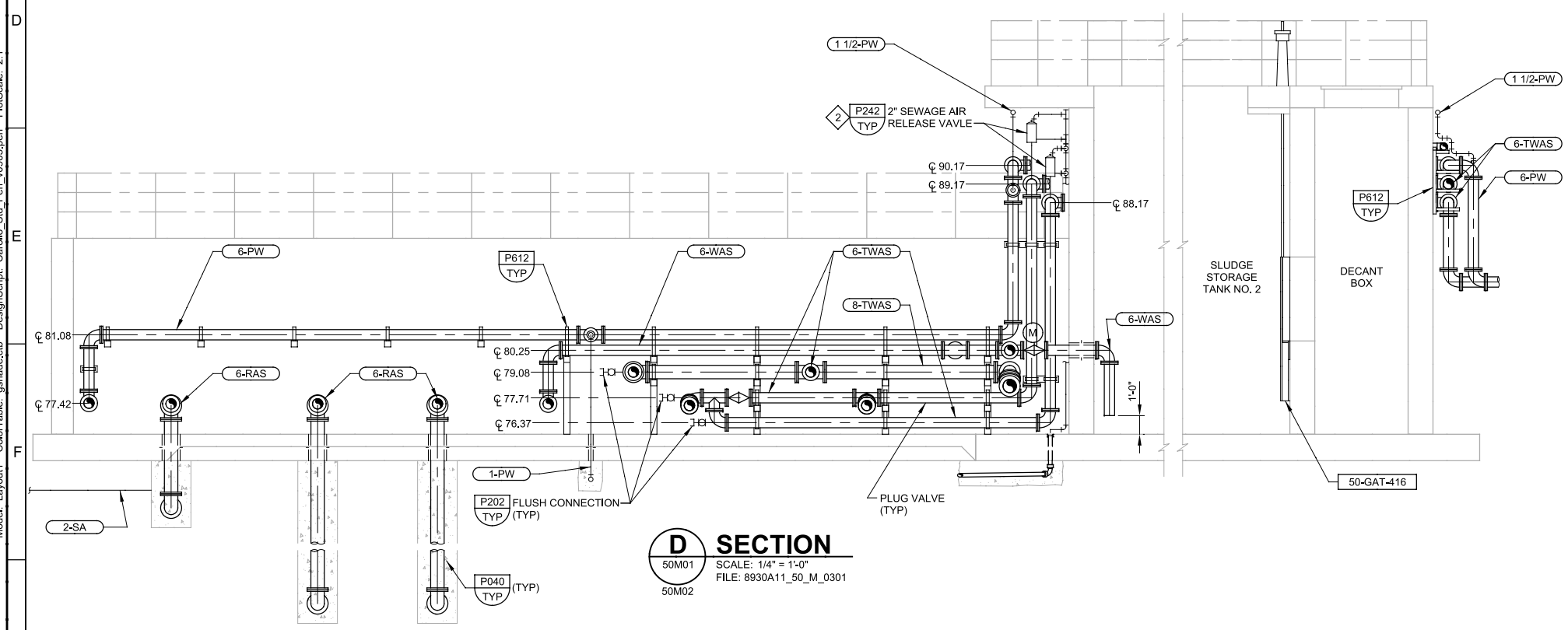

D SECTION
50M01
50M02
SCALE: 1/4" = 1'-0"
FILE: 8930A11_50_M_0301

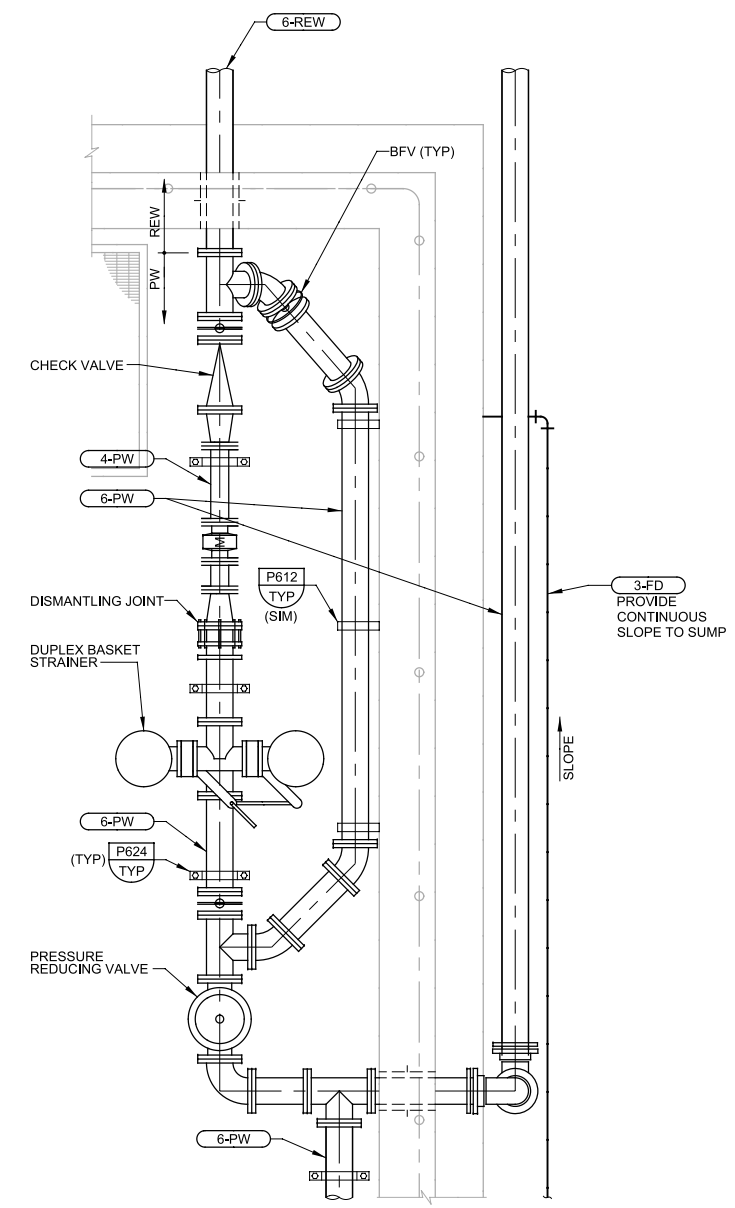

E PARTIAL PLAN
50M01
SCALE: 1/2" = 1'-0"
FILE: 8930A11_50_M_0101

REV	DATE	BY	DESCRIPTION
1	11/2013	HGK	ADDENDUM NO. 4

DESIGNED JBG / KAK
DRAWN NRG
CHECKED SGS
DATE SEPT 2013

REGISTERED PROFESSIONAL ENGINEER KRAUL ANTOUN KAROUZ No. 28941 MECHANICAL STATE OF CALIFORNIA
9/16/2013

carollo®

SAN LUIS OBISPO COUNTY

SAN LUIS OBISPO COUNTY
LOS OSOS WATER RECYCLING FACILITY PROJECT
MECHANICAL
SLUDGE STORAGE TANKS
PARTIAL PLAN AND SECTIONS

VERIFY SCALES
BAR IS ONE INCH ON ORIGINAL DRAWING
0 1"
IF NOT ONE INCH ON THIS SHEET, ADJUST SCALES ACCORDINGLY

JOB NO. 8930A.11
DRAWING NO. 50M03
SHEET NO. OF 549

PROJECT NO. 8930A.11 FILE NAME: 8930A11-50M03.dgn

LAST SAVED BY: ddonk Model: Layout1 ColorTable: gshade.ctb DesignScript: Carollo_Std_Pen_v0905.pen PlotScale: 2:1 User: PSanchez Plot Date: 07-NOV-2013 1:20:40 PM

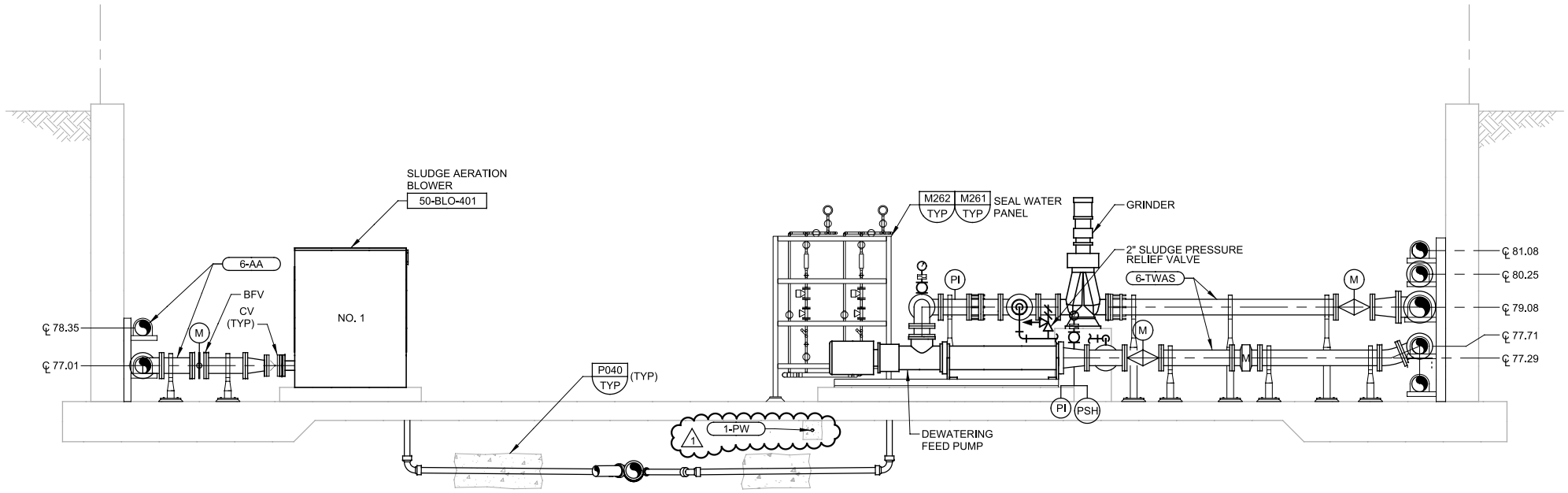

J SECTION
50M01
SCALE: 3/8" = 1'-0"
FILE: 8930A11_50_M_0305

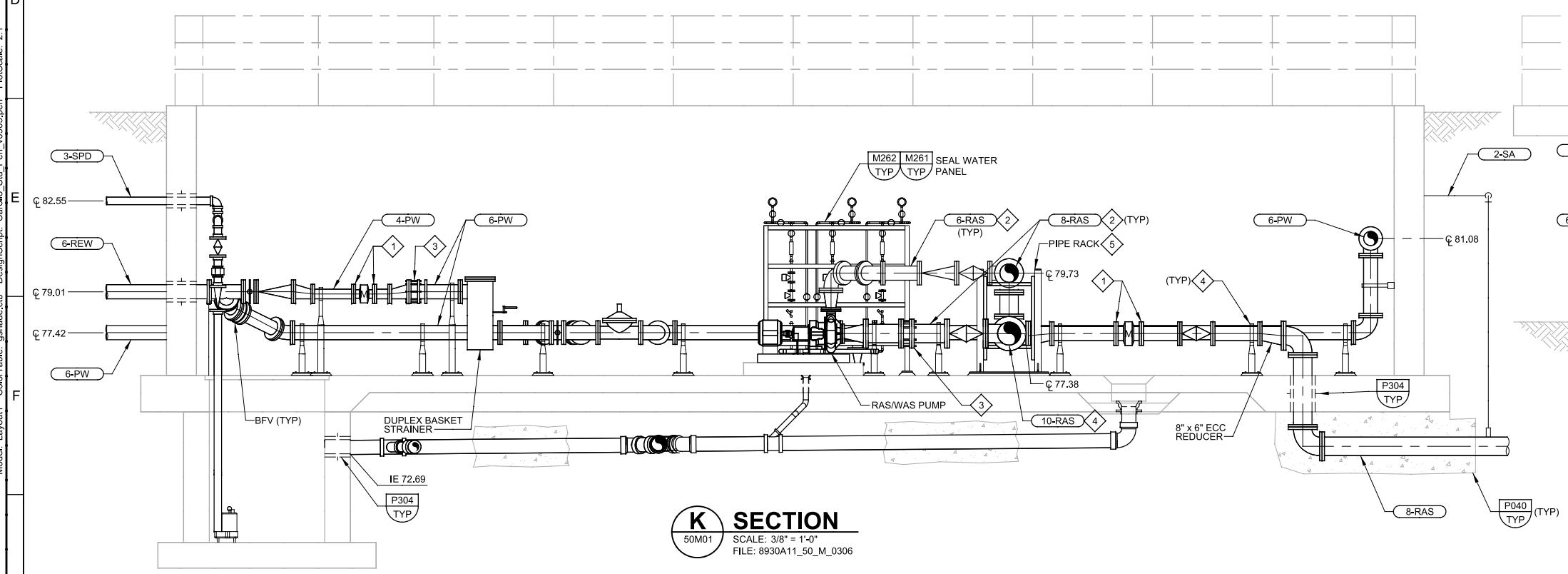

K SECTION
50M01
SCALE: 3/8" = 1'-0"
FILE: 8930A11_50_M_0306

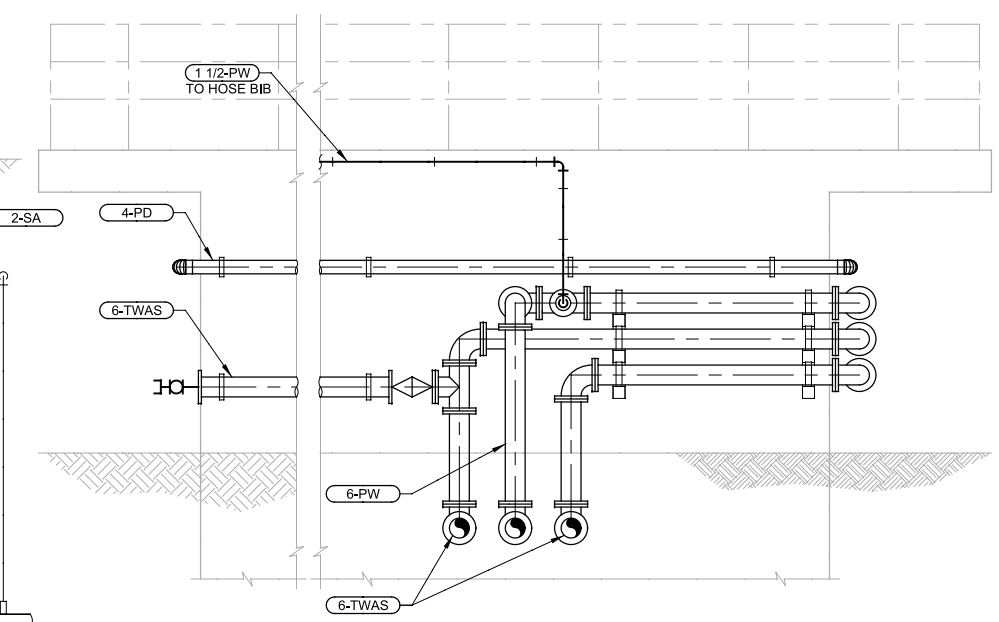

P SECTION
50M01
SCALE: 3/8" = 1'-0"
FILE: 8930A11_50_M_0307

GENERAL NOTES

1. REFER TO DRAWING 50M01 FOR ADDITIONAL GENERAL NOTES
2. ENCASE ALL UNDERSLAB PIPING PER TYPICAL DETAIL P040. EXTEND ENCASEMENT 1' BEYOND STRUCTURE FOOTING, AT END OF ENCASEMENT PROVIDE PIPE CONNECITON PER TYPICAL DETIAL P342.

KEY NOTES

1. PROVIDE GROOVED JOINT FLANGE ADAPTER FOR CONNECTION TO THE METER.
2. ALL PIPE JOINTS ABOVE GRADE SHALL BE GROOVED JOINT. UNDERGOUND OR UNDERSLAB PIPE JOINTS SHALL BE PER SPECIFICATIONS.
3. PROIVDE FLANGES OR GROOVED FLANGE ADAPTERS FOR TYPICAL DETIAL P110.
4. SUPPORT PIPE PER TYPICAL DETAIL P624.
5. PIPE RACK PER DETAIL 1/50S01.

REV	DATE	BY	DESCRIPTION
1	11/2013	HGK	ADDENDUM NO. 4

DESIGNED JBG / KAK
DRAWN NRG
CHECKED SGS
DATE SEPT 2013

REGISTERED PROFESSIONAL ENGINEER KRISTIL ANTOUN KIRIROUZ No. 28941 MECHANICAL STATE OF CALIFORNIA
9/16/2013

carollo

SAN LUIS OBISPO COUNTY

SAN LUIS OBISPO COUNTY
LOS OSOS WATER RECYCLING FACILITY PROJECT
MECHANICAL
SLUDGE STORAGE TANKS SECTIONS

VERIFY SCALES
BAR IS ONE INCH ON ORIGINAL DRAWING
0 1"
IF NOT ONE INCH ON THIS SHEET, ADJUST SCALES ACCORDINGLY

JOB NO. 8930A.11
DRAWING NO. 50M05
SHEET NO. OF 549

PROJECT NO. 8930A.11 FILE NAME: 8930A11-50M05.dgn

Plot Date: 07-NOV-2013 1:37:06 PM User: PSanchez Model: Layout1 ColorTable: gshade.ctb DesignScript: Carollo_Std_Pen_v0905.pen PlotScale: 2:1 LAST SAVED BY: ddonk

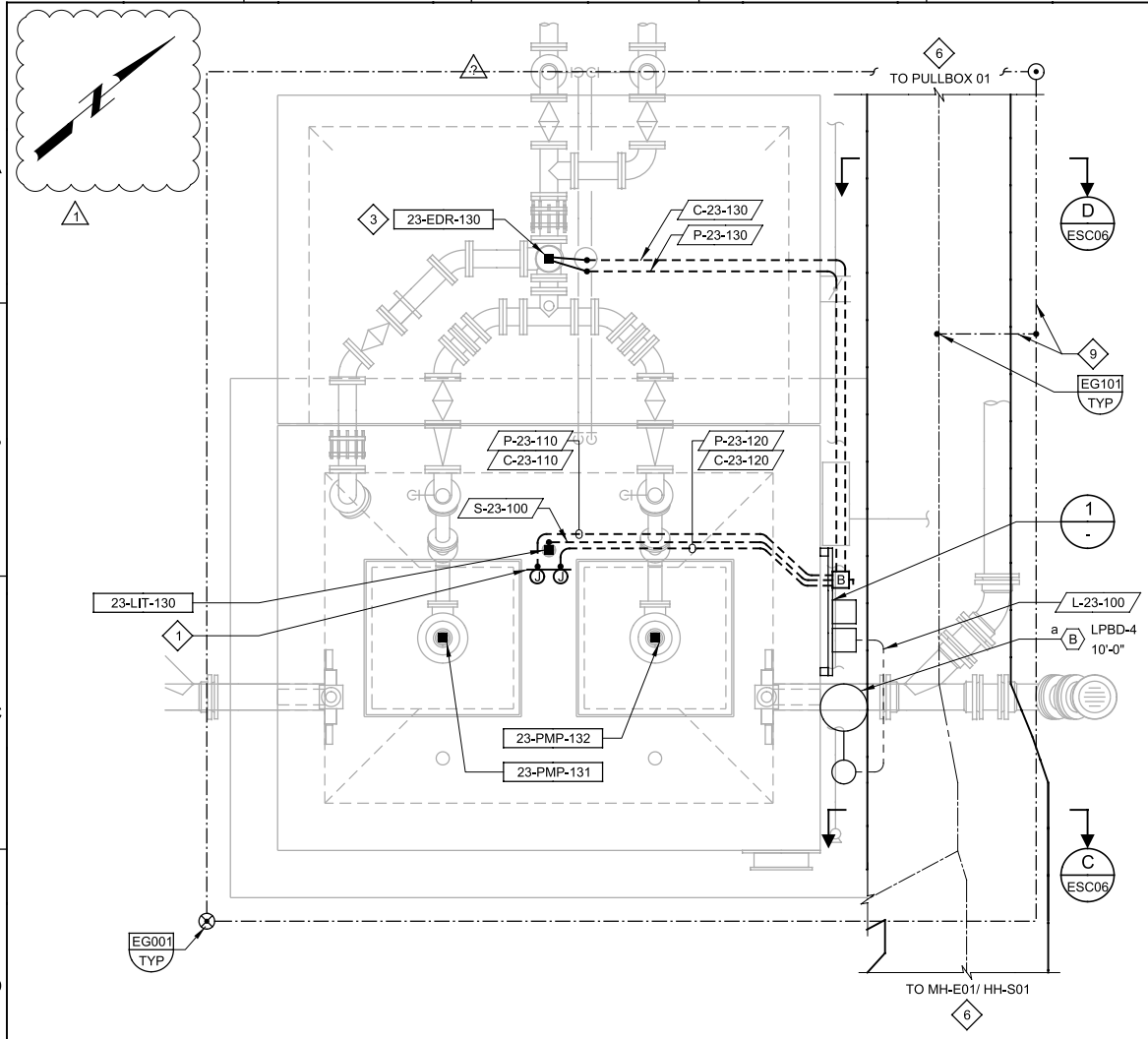

A PLAN

SCALE: 1/2" = 1'-0"
FILE: 8930A1123E100.dgn

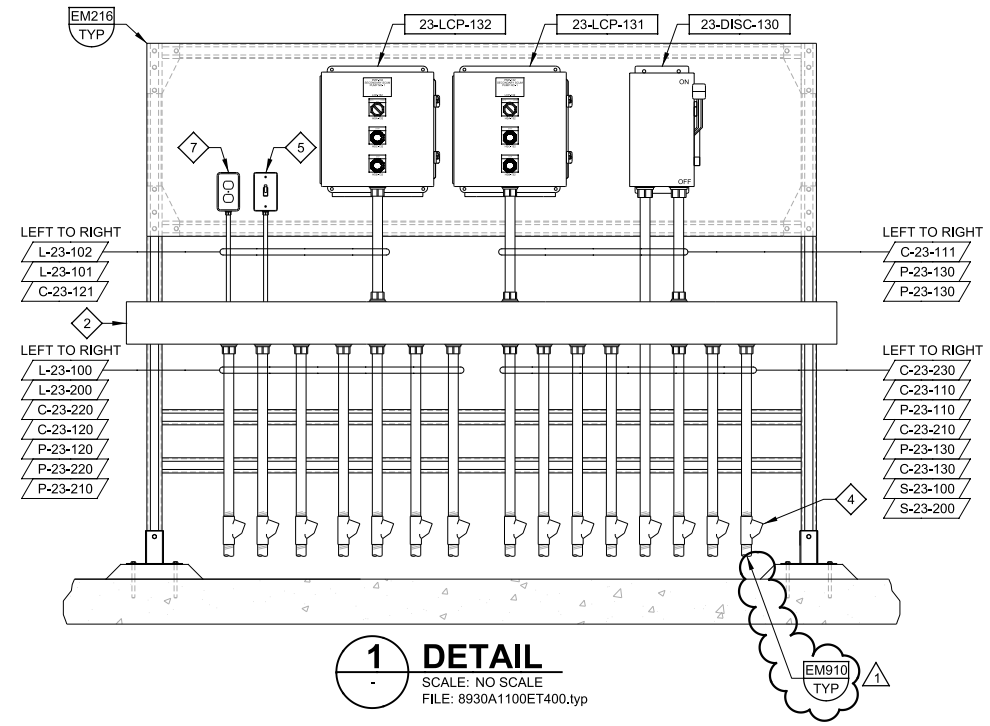

1 DETAIL

SCALE: NO SCALE
FILE: 8930A1100ET400.typ

GENERAL NOTES:

1. REFER TO SPECIFICATION SECTION 16050 FOR HAZARDOUS AREA CLASSIFICATIONS.

KEY NOTES:

1. INSTALL TERMINAL JUNCTION BOX PER DETAIL EM909/TYP.
2. SIZE NEMA 4X-SS WIREWAY PER NEC AND PROVIDE DIVIDER TO SEPARATE POWER/CONTROL WITH ANALOG SIGNAL. MOUNT ON COMMON SUPPORT.
3. PER DETAIL EM404/TYP. 2
4. PROVIDE CONDUIT SEAL PER DETAIL EM108/TYP.
5. DUPLEX RECEPTACLE
   WP, GFCI
   LPBD-2
6. REFER TO DRAWING ESC03 FOR CONTINUATION.
7. a S LPBD-4 WP
8. PER DETAIL EL500/TYP.
9. #2/0 SDBC.

REV	DATE	BY	DESCRIPTION
2	11/2013	IV	ADDENDUM NO. 4
1	11/2013	IY	ADDENDUM NO. 3

DESIGNED AMS
DRAWN VCP
CHECKED RAM
DATE SEPT 2013

REGISTERED PROFESSIONAL ENGINEER IAN R. VARLEY No. 12879 ELECTRICAL STATE OF CALIFORNIA
9/16/2013

carollo

SAN LUIS OBISPO COUNTY

SAN LUIS OBISPO COUNTY
LOS OSOS WATER RECYCLING FACILITY PROJECT
ELECTRICAL
SCUM PUMP STATION
PLAN

VERIFY SCALES
BAR IS ONE INCH ON ORIGINAL DRAWING
0 1"
IF NOT ONE INCH ON THIS SHEET, ADJUST SCALES ACCORDINGLY

JOB NO. 8930A.11
DRAWING NO. 23E01
SHEET NO. 329 OF 549

PROJECT NO. 8930A.11 FILE NAME: 8930A1123E01.dgn

Model: Layout1 ColorTable: ashade.ctb DesignScript: Carollo Std Pen v0905.pen PlotScale: 2:1 Plot Date: 12-NOV-2013 10:25:40 AM User: EJohnson LAST SAVED BY: ejohnson

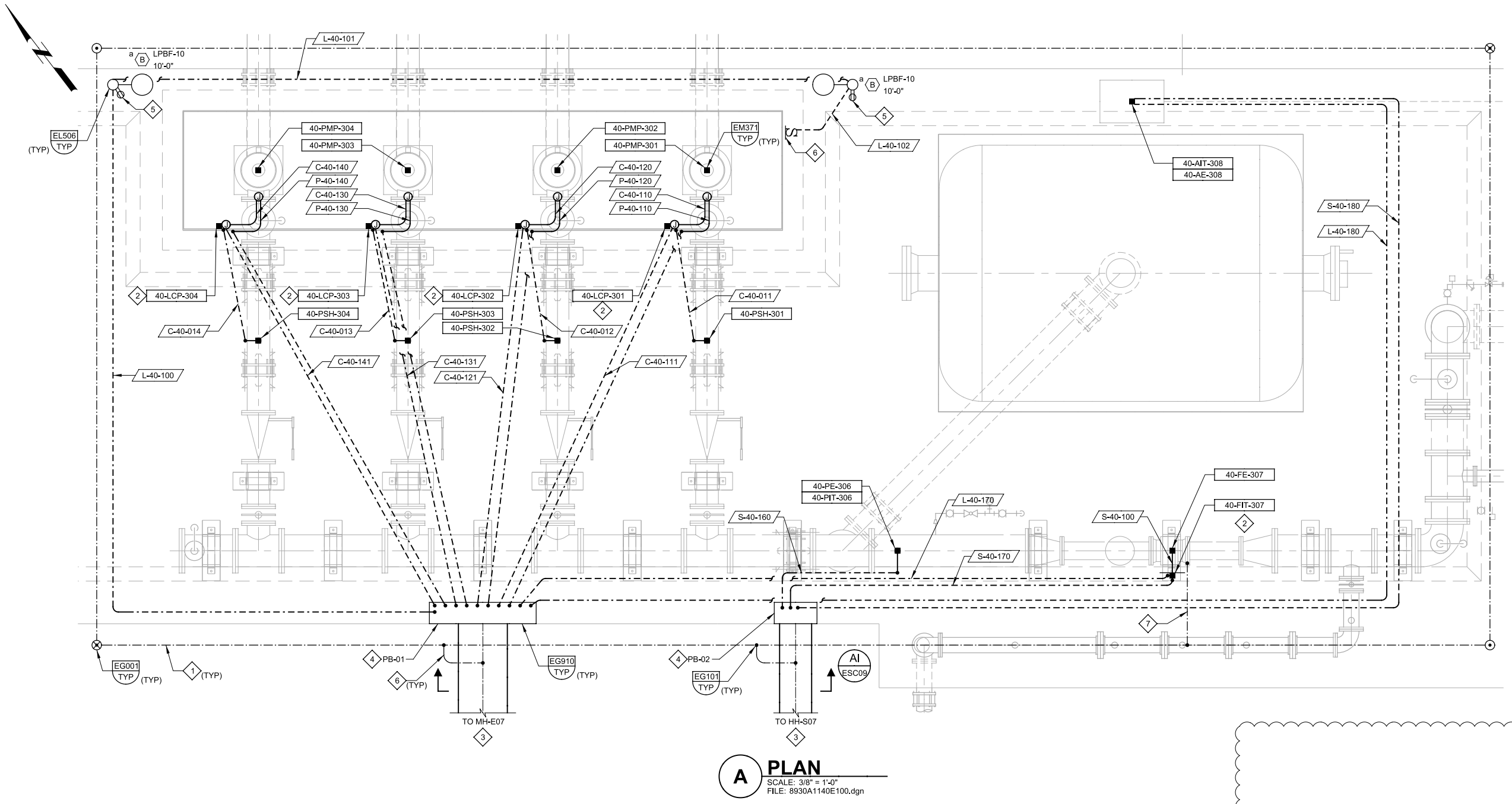

A PLAN

SCALE: 3/8" = 1'-0"
FILE: 8930A1140E100.dgn

GENERAL NOTES:

1. REFER TO SPECIFICATION SECTION 16050 FOR HAZARDOUS AREA CLASSIFICATIONS.
2. ROUTE CONDUIT IN SLAB PER DETAIL EM115/TYP AND EM117/TYP.

KEY NOTES:

1. #2/0 SDBC.
2. MOUNT FIT/LCP PER DETAIL EM201/TYP.
3. REFER TO DRAWING ESC03 FOR CONTINUATION.
4. MOUNT PULL BOX ON STAND PER DETAIL EM202/TYP. SIZE THE PULL BOX PER NEC.
5. DUPLEX RECEPTACLE WP, GFCI LPBF-8
6. LPBF-38
7. #2 SDBC.
8. CONDUIT SEAL IF REQUIRED.

REV	DATE	BY	DESCRIPTION
1	11/2013	IY	ADDENDUM NO. 4

DESIGNED AMS
DRAWN AD
CHECKED RAM
DATE SEPT 2013

REGISTERED PROFESSIONAL ENGINEER IVAN A. VARLEY No. 12679 ELECTRICAL STATE OF CALIFORNIA 9/16/2013

carollo

SAN LUIS OBISPO COUNTY

SAN LUIS OBISPO COUNTY
LOS OSOS WATER RECYCLING FACILITY PROJECT
ELECTRICAL
EFFLUENT PUMP STATION PLAN

VERIFY SCALES
BAR IS ONE INCH ON ORIGINAL DRAWING
0 1"
IF NOT ONE INCH ON THIS SHEET, ADJUST SCALES ACCORDINGLY

JOB NO. 8930A.11
DRAWING NO. 40E01
SHEET NO. 347 OF 549

PROJECT NO. 8930A.11 FILE NAME: 8930A1140E01.dgn

Plot Date: 07-NOV-2013 2:50:51 PM
User: SFunckes
Model: Layout1 ColorTable: gshade.ctb DesignScript: Carollo_Std_Pen_v0905.pen PlotScale: 2:1
LAST SAVED BY: sfunckes

GENERAL NOTES:

1. REFER TO SPECIFICATION SECTION 16050 FOR HAZARDOUS AREA CLASSIFICATIONS.

KEY NOTES:

1. MOUNT THE DISCONNECT SWITCH AND JUNCTION BOX ON STAND PER DETAIL EM202/TYP.
2. ROUTE THE CONDUIT ALONG THE WALL PER DETAIL EM101/TYP.
3. ROUTE THE CONDIT INSIDE THE SLAB PER DETAIL EM115/TYP.
4. MOUNT THE PULL BOXES ON THE WALL AND SIZE THE PULL BOX PER NEC. INSTALL EXPANSION COUPLING TO OUTGOING CONDUITS. REF EM910/TYP.
5. REFER TO DRAWING ESCO3 FOR CONTINUATION.
6. CONDUIT SEALS PER NEC ARTICLE 500..

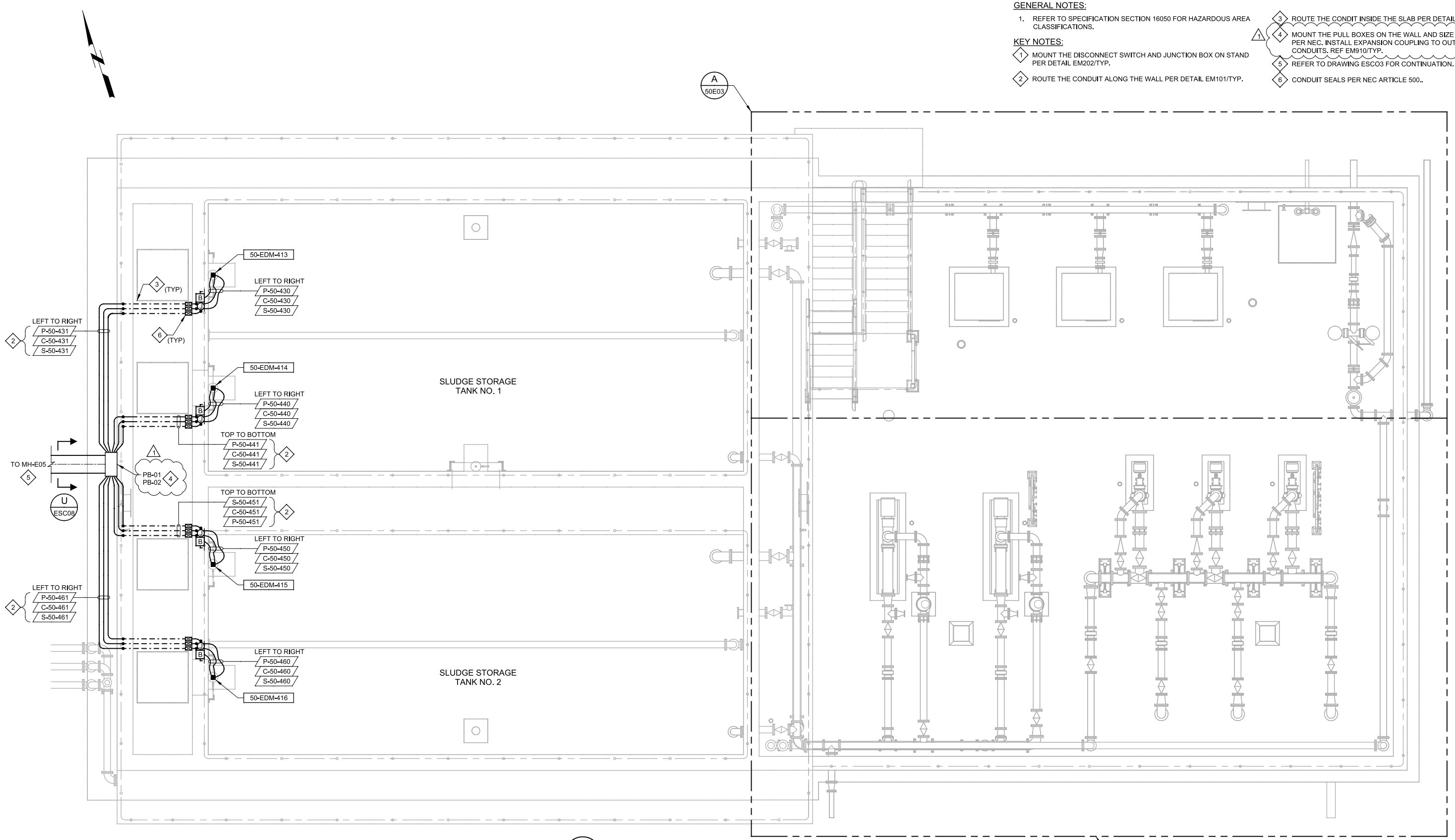

A PLAN

SCALE: 1/4" = 1'-0"
FILE: 8930A1150E101

REV	DATE	BY	DESCRIPTION
1	11/2013	IY	ADDENDUM NO. 4

DESIGNED AMS
DRAWN VCP
CHECKED RAM
DATE SEPT 2013

REGISTERED PROFESSIONAL ENGINEER — IAN R. VARLEY — No. 12879 — ELECTRICAL — STATE OF CALIFORNIA — 9/16/2013

carollo

SAN LUIS OBISPO COUNTY

SAN LUIS OBISPO COUNTY
LOS OSOS WATER RECYCLING FACILITY PROJECT
ELECTRICAL
SLUDGE STORAGE TANKS
POWER & CONTROL PLAN

VERIFY SCALES
BAR IS ONE INCH ON ORIGINAL DRAWING
0 1"
IF NOT ONE INCH ON THIS SHEET, ADJUST SCALES ACCORDINGLY

JOB NO. 8930A.11
DRAWING NO. 50E01
SHEET NO. 350 OF 549

PROJECT NO. 8930A.11 FILE NAME: 8930A1150E01.dgn

Plot Date: 07-NOV-2013 6:59:02 AM
User: SFunckes
PlotScale: 2:1
DesignScript: Carollo_Std_Pen_v0905.pen
ColorTable: gshade.ctb
Model: Layout1
LAST SAVED BY: sfunckes

GENERAL NOTES:

1. REFER TO SPECIFICATION SECTION 16050 FOR HAZARDOUS AREA CLASSIFICATIONS.
2. ROUTE ALL CONDUITS INSIDE THE SLAB PER DETAIL EM115/TYP UNLESS OTHERWISE NOTED.

KEY NOTES:

1. PER DETAIL EM301/TYP.
2. PER DETAIL EM404/TYP.
3. MOUNT LCP PER DETAIL EM201/TYP.
4. NOT ALL CONDUITS ARE SHOWN FOR CLARITY.

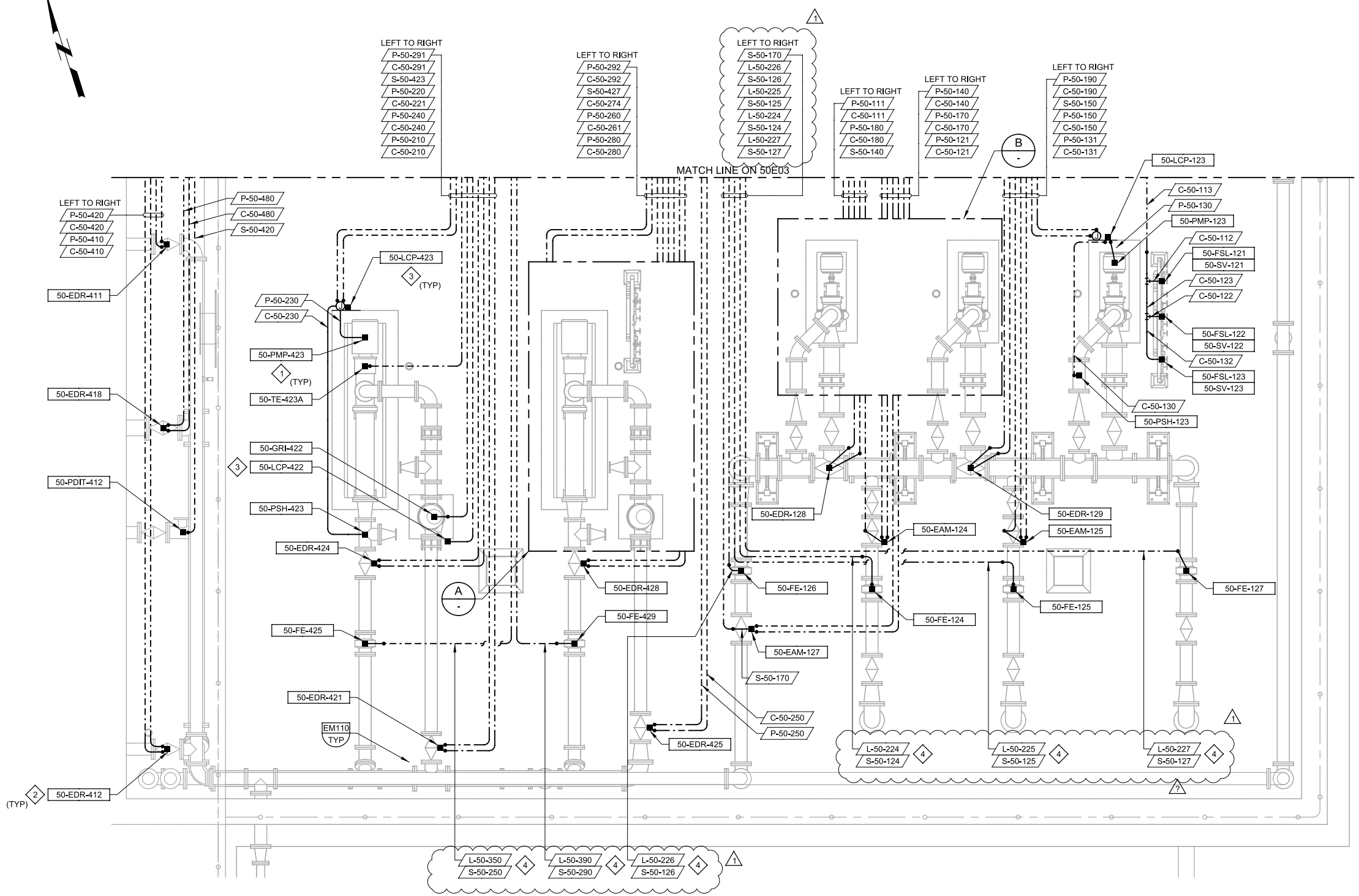

A PLAN
SCALE: 3/8" = 1'-0"
FILE: 8930A1150E101

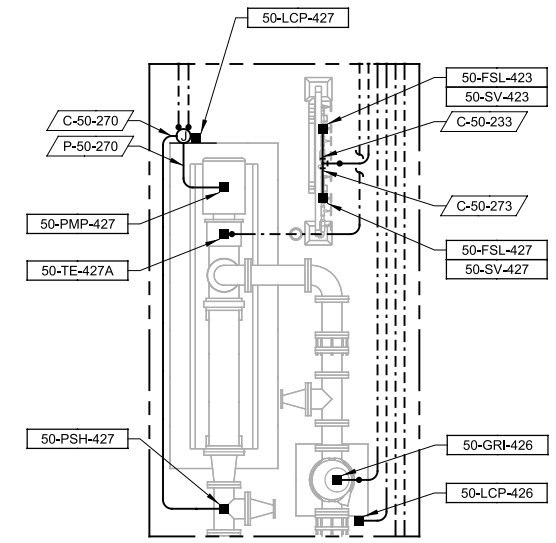

A DETAIL
SCALE: 3/8" = 1'-0"
FILE: 8930A1150E101

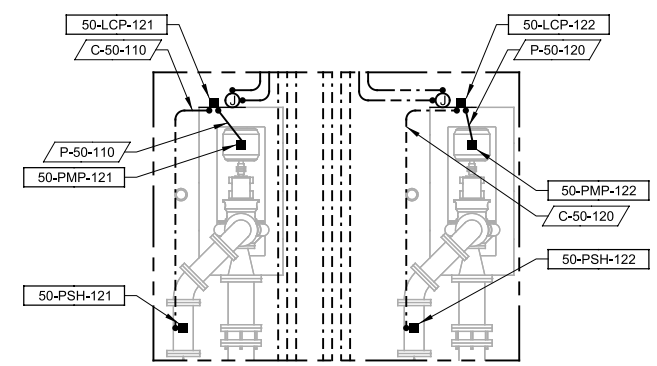

B DETAIL
SCALE: 3/8" = 1'-0"
FILE: 8930A1150E101

REV	DATE	BY	DESCRIPTION
1	11/2013	IY	ADDENDUM NO. 4

DESIGNED AMS
DRAWN VCP
CHECKED RAM
DATE SEPT 2013

REGISTERED PROFESSIONAL ENGINEER IAN R. VARLEY No. 12079 ELECTRICAL STATE OF CALIFORNIA 9/16/2013

carollo

SAN LUIS OBISPO COUNTY

SAN LUIS OBISPO COUNTY
LOS OSOS WATER RECYCLING FACILITY PROJECT
ELECTRICAL
SLUDGE STORAGE TANKS
POWER & CONTROL PARTIAL PLAN

VERIFY SCALES
BAR IS ONE INCH ON ORIGINAL DRAWING
0 1"
IF NOT ONE INCH ON THIS SHEET, ADJUST SCALES ACCORDINGLY

JOB NO. 8930A.11
DRAWING NO. 50E02
SHEET NO. 351 OF 549

PROJECT NO. 8930A.11 FILE NAME: 8930A1150E02.dgn

Plot Date: 07-NOV-2013 8:26:04 AM User: SFunckes PlotScale: 2:1 DesignScript: Carollo_Std_Pen_v0905.pen ColorTable: gshade.ctb Model: Layout1 LAST SAVED BY: sfunckes

GENERAL NOTES:

1. REFER TO SPECIFICATION SECTION 16050 FOR HAZARDOUS AREA CLASSIFICATIONS.
2. ROUTE ALL CONDUITS INSIDE THE SLAB PER DETAIL EM115/TYP, UNLESS OTHERWISE NOTED.

KEY NOTES:

1. PER DETAIL EM404/TYP.
2. MOUNT THE JUNCTION BOX ON STAND PER DETAIL EM201/TYP. PROVIDE FOR EACH INSTRUMENT INSIDE SLUDGE AERATION BLOWER AS SHOWN IN P&ID DRAWING AN INDIVIDUAL 3/4-INCH CONDUIT WITH 2-#14 CONDUCTORS TO COMPLETE THE INSTALLATION.
3. ROUTE CONDUIT VERTICALLY EXPOSED ALONG THE WALL PER DETAIL EM101/TYP. PENETRATE THE DRY PIT MINIMUM OF 12-INCH BELOW THE TOP OF THE WALL. HORIZONTAL SPACING OF CONDUIT PENETRATING THE WALL SHALL BE MINIMUM OF 4X OUTSIDE DIAMETER OF THE LARGER CONDUIT.
4. MOUNT THE LCP PER DETAIL EM201/TYP.
5. NOT ALL CONDUITS ARE SHOWN FOR CLARITY.

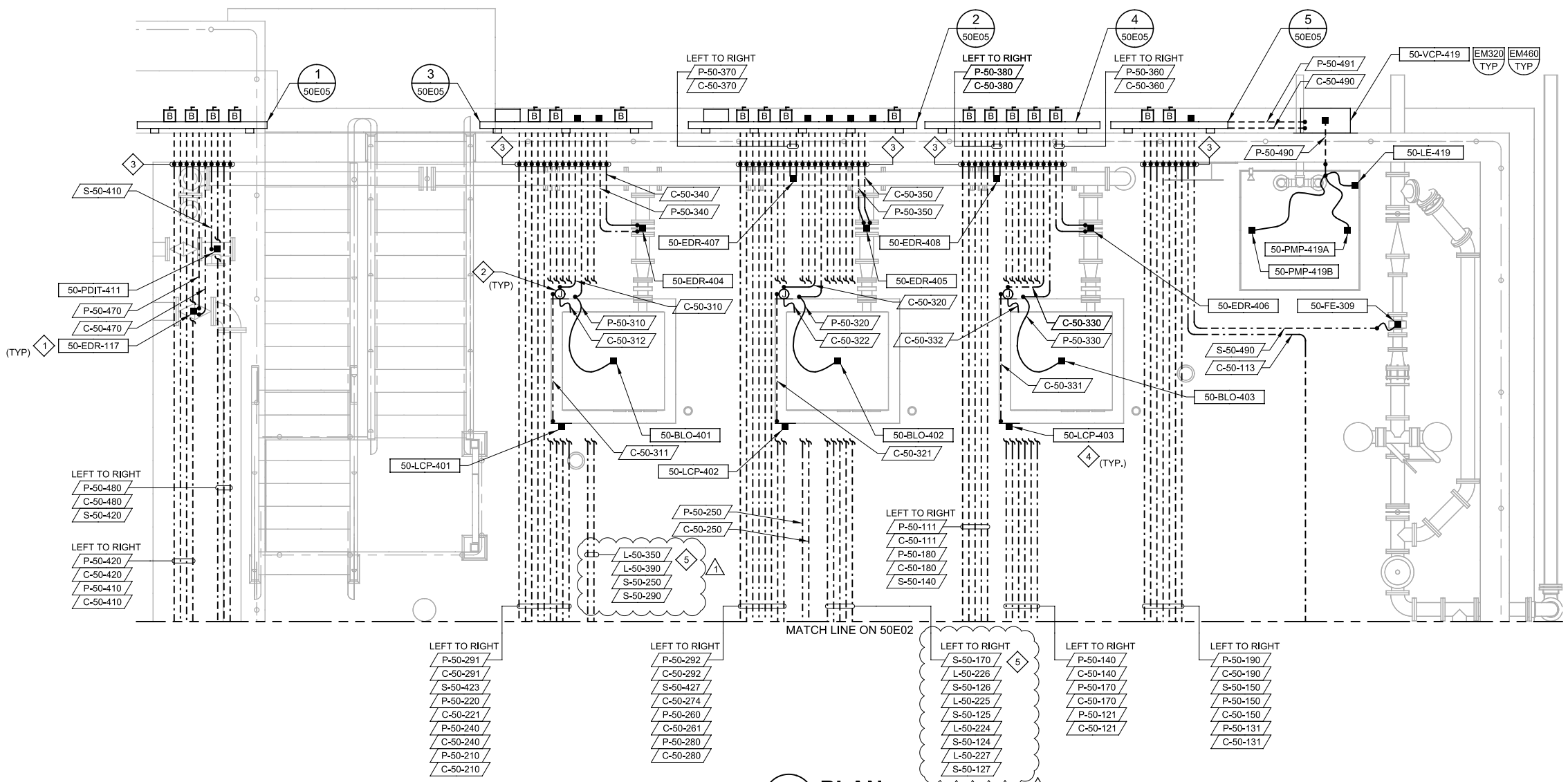

A PLAN

SCALE: 3/8" = 1'-0"
FILE: 8930A1150E101

REV	DATE	BY	DESCRIPTION
1	11/2013	IY	ADDENDUM NO. 4

DESIGNED AMS
DRAWN VCP
CHECKED RAM
DATE SEPT 2013

REGISTERED PROFESSIONAL ENGINEER IAN R. VARLEY No. 12879 ELECTRICAL STATE OF CALIFORNIA 9/16/2013

carollo®

SAN LUIS OBISPO COUNTY

SAN LUIS OBISPO COUNTY
LOS OSOS WATER RECYCLING FACILITY PROJECT
ELECTRICAL
SLUDGE STORAGE TANKS
POWER & CONTROL PARTIAL PLAN

VERIFY SCALES
BAR IS ONE INCH ON ORIGINAL DRAWING
0 1"
IF NOT ONE INCH ON THIS SHEET, ADJUST SCALES ACCORDINGLY

JOB NO. 8930A.11
DRAWING NO. 50E03
SHEET NO. 352 OF 549

PROJECT NO. 8930A.11 FILE NAME: 8930A1150E03.dgn

LAST SAVED BY: ejohnson
Model: Layout1 ColorTable: gshade.ctb DesignScript: Carollo_Std_Pen_v0905.pen PlotScale: 2:1
User: EJohnson Plot Date: 12-NOV-2013 10:07:01 AM

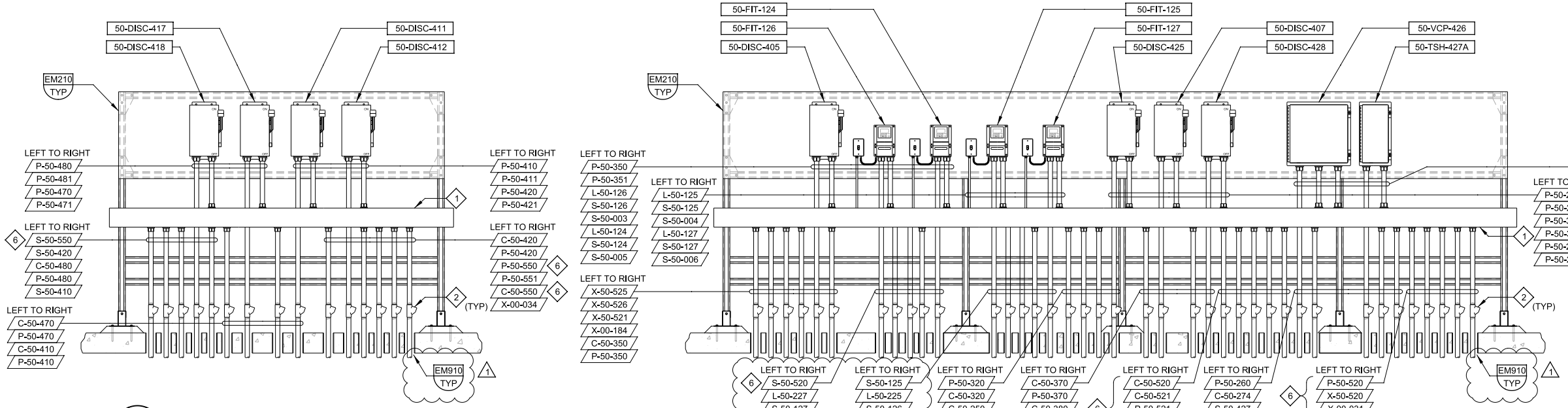

1 STANDARD NO. 5 DETAIL

50E03 SCALE: NOT TO SCALE
FILE: 8930A1100ET400.typ

2 STANDARD NO. 2 DETAIL

50E03 SCALE: NOT TO SCALE
FILE: 8930A1100ET400.typ

GENERAL NOTES:

1. REFER TO SPECIFICATION SECTION 16050 FOR HAZARDOUS AREA CLASSIFICATIONS.

KEY NOTES:

1. SIZE NEMA 4X WIREWAY PER NEC AND PROVIDE DIVIDER TO SEPARATE POWER/CONTROL WITH ANALOG SIGNAL. MOUNT ON COMMON SUPPORT.
2. PROVIDE CONDUIT SEAL PER DETAIL EM108/TYP
3. DUPLEX RECEPTACLE WP, GFCI LPBF-22
4. a S LPBF-20 b S LPBF-20 c S LPBF-42
5. REFER TO DRAWING 50E04 FOR CONTINUATION.
6. REFER TO DRAWING ESC03 FOR CONTINUATION.

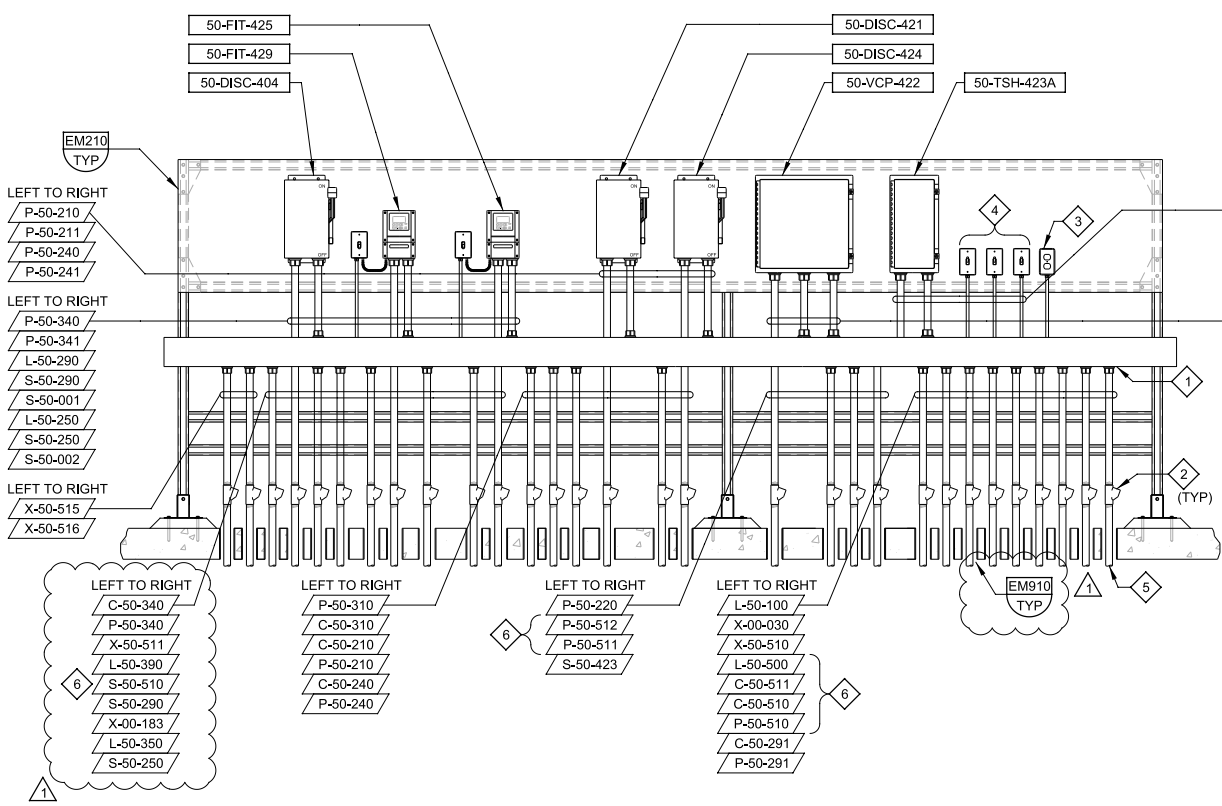

3 STANDARD NO. 1 DETAIL

50E03 SCALE: NOT TO SCALE
FILE: 8930A1100ET400.typ

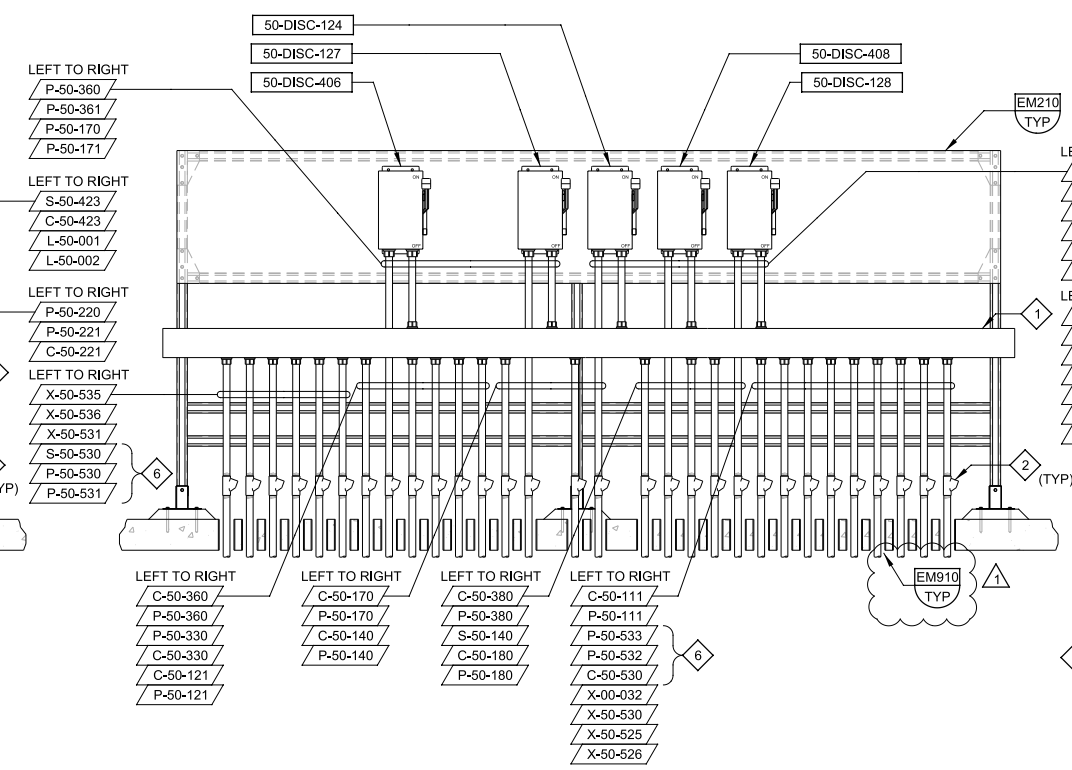

4 STANDARD NO. 3 DETAIL

50E03 SCALE: NOT TO SCALE
FILE: 8930A1100ET400.typ

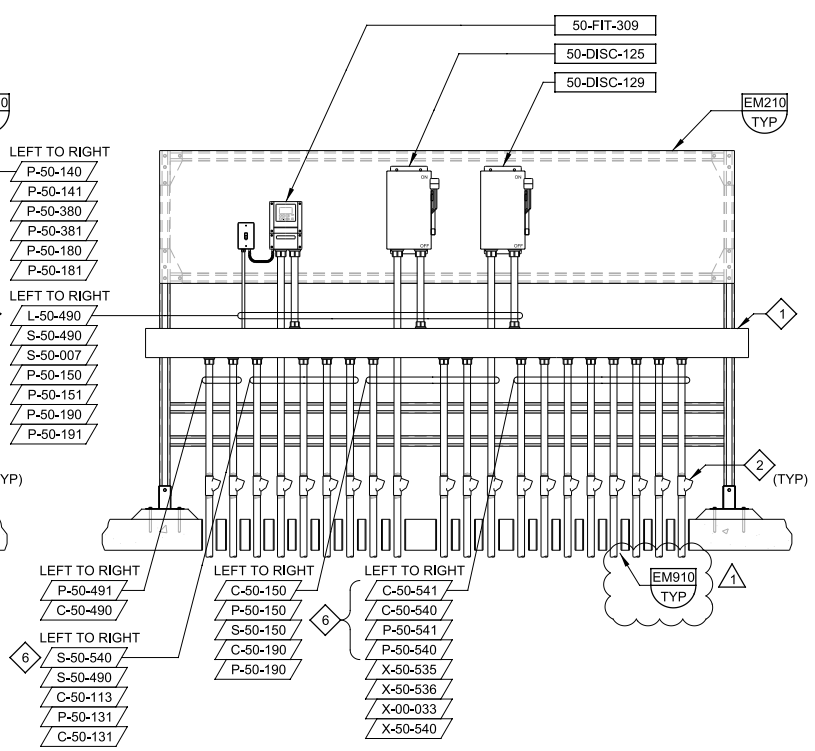

5 STANDARD NO. 4 DETAIL

50E03 SCALE: NOT TO SCALE
FILE: 8930A1100ET400.typ

REV	DATE	BY	DESCRIPTION
1	11/2013	IY	ADDENDUM NO. 4

DESIGNED AMS
DRAWN VCP
CHECKED RAM
DATE SEPT 2013

REGISTERED PROFESSIONAL ENGINEER IAN R. VARLEY No. 12879 ELECTRICAL STATE OF CALIFORNIA 9/16/2013

carollo®

SAN LUIS OBISPO COUNTY

SAN LUIS OBISPO COUNTY
LOS OSOS WATER RECYCLING FACILITY PROJECT
ELECTRICAL
SLUDGE STORAGE TANKS DETAILS

VERIFY SCALES
BAR IS ONE INCH ON ORIGINAL DRAWING
0 1"
IF NOT ONE INCH ON THIS SHEET, ADJUST SCALES ACCORDINGLY

JOB NO. 8930A.11
DRAWING NO. 50E05
SHEET NO. 354 OF 549

PROJECT NO. 8930A.11 FILE NAME: 8930A1150E05.dgn

LAST SAVED BY: sfunckes Model: Layout1 ColorTable: gshade.ctb DesignScript: Carollo_Std_Pen_v0905.pen PlotScale: 2:1 User: SFunckes Plot Date: 07-NOV-2013 8:40:51 AM

CONDUIT SCHEDULE AREA 50

11/6/13

LOS OSOS WATER RECYCLING FACILITY

SLUDGE STORAGE TANKS

CONDUIT			CONDUCTORS			GROUND				
NUMBER	DWG	SIZE	#	SIZE	TYPE	#	SIZE	TYPE	DESCRIPTION	CONNECTING SEGMENTS
C-50-563	ESC08 ESC09 51E06	3"	8 110	#12 #14	XHHW-2 XHHW-2	1	#12	XHHW-2	FR: MH-E10 TO: PCM-2 VIA MH-E05 12 #14 >> CONTROL: 50-EDR-405, 2-SPARE 12 #14 >> CONTROL: 50-EDR-407, 2-SPARE 12 #14 >> CONTROL: 50-EDR-425, 2-SPARE 12 #14 >> CONTROL:50-EDR-428, 2-SPARE 6 #14 >> CONTROL: 50-VCP-426, 2-SPARE 2 #12 >> POWER: 50-FIT-124 2 #12 >> POWER: 50-FIT-125 2 #12 >> POWER: 50-FIT-126 2 #12 >> POWER: 50-FIT-127 12 #14 >> CONTROL: 50-EDR-406, 2-SPARE 10 #14 >> CONTROL: 50-EAM-127, 2-SPARE 10 #14 >> CONTROL: 50-EAM-124, 2-SPARE 12 #14 >> CONTROL: 50-EDR-408, 2-SPARE 12 #14 >> CONTROL: 50-EDR-128, 2-SPARE	 C-50-521 C-50-521 C-50-521 C-50-521 C-50-521 C-50-521 C-50-521 C-50-521 C-50-521 C-50-530 C-50-530 C-50-530 C-50-530 C-50-530
L-50-001	50E05	0.75"	4	#12	XHHW-2	1	#12	XHHW-2	FR: LIGHTING SWITCHES TO: WIREWAY @ STAND NO. 1 4 #12 >> LPBF-20, 42: LIGHTING	L-50-100
L-50-002	50E05	0.75"	2	#12	XHHW-2	1	#12	XHHW-2	FR: RECEPTACLES TO: WIREWAY @ STAND NO. 1 2 #12 >> LPBF-22: RECEPTACLE	L-50-500
L-50-100	50E04 50E05	1"	4	#12	XHHW-2	1	#12	XHHW-2	FR: WIREWAY @ STAND NO. 1 TO: LIGHTING FIXTURE 4 #12 >> LPBF-20, 42: LIGHTING	L-50-101 L-50-001
L-50-101	50E04	1"	2	#12	XHHW-2	1	#12	XHHW-2	FR: LIGHTING FIXTURE TO: LIGHTING FIXTURE 2 #12 >> LPBF-20: LIGHTING	 L-50-100
L-50-110	50E04	1"	2	#12	XHHW-2	1	#12	XHHW-2	FR: LIGHTING FIXTURE TO: LIGHTING FIXTURE 2 #12 >> LPBF-42: LIGHTING	L-50-111 L-50-100
L-50-111	50E04	1"	2	#12	XHHW-2	1	#12	XHHW-2	FR: LIGHTING FIXTURE TO: CONDUIT TEE 2 #12 >> LPBF-42: LIGHTING	 L-50-110
L-50-124	50E05	0.75"	2	#12	XHHW-2	1	#12	XHHW-2	FR: DISCONNECT SWITCH 50-FIT-124 TO: WIREWAY @ STAND NO. 2 2 #12 >> POWER: 50-FIT-124	C-50-521
L-50-125	50E05	0.75"	2	#12	XHHW-2	1	#12	XHHW-2	FR: DISCONNECT SWITCH 50-FIT-125 TO: WIREWAY @ STAND NO. 2 2 #12 >> POWER: 50-FIT-125	C-50-521
L-50-126	50E05	0.75"	2	#12	XHHW-2	1	#12	XHHW-2	FR: DISCONNECT SWITCH 50-FIT-126 TO: WIREWAY @ STAND NO. 2 2 #12 >> POWER: 50-FIT-126	C-50-521
L-50-127	50E05	0.75"	2	#12	XHHW-2	1	#12	XHHW-2	FR: DISCONNECT SWITCH 50-FIT-127 TO: WIREWAY @ STAND NO. 2 2 #12 >> POWER: 50-FIT-127	C-50-521
L-50-224	50E05 50E02 50E03	1"	1	MFR	CABLE	1	#14	XHHW-2	FR: 50-FE-124 TO: 50-FIT-124 1 MFR >> POWER: 50-FE-124	
L-50-225	50E05 50E02 50E03	1"	1	MFR	CABLE	1	#14	XHHW-2	FR: 50-FE-125 TO: 50-FIT-125 1 MFR >> POWER: 50-FE-125	
L-50-226	50E05 50E02 50E03	1"	1	MFR	CABLE	1	#14	XHHW-2	FR: 50-FE-126 TO: 50-FIT-126 1 MFR >> POWER: 50-FE-126	
L-50-227	50E05 50E02 50E03	1"	1	MFR	CABLE	1	#14	XHHW-2	FR: 50-FE-127 TO: 50-FIT-127 1 MFR >> POWER: 50-FE-127	
L-50-250	50E05	0.75"	2	#12	XHHW-2	1	#12	XHHW-2	FR: DISCONNECT SWITCH 50-FIT-425 TO: WIREWAY @ STAND NO. 1 2 #12 >> POWER: 50-FIT-425	C-50-511
L-50-290	50E05	0.75"	2	#12	XHHW-2	1	#12	XHHW-2	FR: DISCONNECT SWITCH 50-FIT-429 TO: WIREWAY @ STAND NO. 1 2 #12 >> POWER: 50-FIT-429	C-50-511

CONDUIT SCHEDULE AREA 50

11/6/13

LOS OSOS WATER RECYCLING FACILITY

SLUDGE STORAGE TANKS

CONDUIT			CONDUCTORS			GROUND				
NUMBER	DWG	SIZE	#	SIZE	TYPE	#	SIZE	TYPE	DESCRIPTION	CONNECTING SEGMENTS
L-50-350	50E05 50E02 50E03	1"	1	MFR	CABLE	1	#14	XHHW-2	FR: 50-FE-425 TO: 50-FIT-425 1 MFR >> POWER: 50-FE-425	
L-50-390	50E05 50E02 50E03	1"	1	MFR	CABLE	1	#14	XHHW-2	FR: 50-FE-429 TO: 50-FIT-429 1 MFR >> POWER: 50-FE-429	
L-50-490	50E05	0.75"	2	#12	XHHW-2	1	#12	XHHW-2	FR: 50-FIT-309 TO: WIREWAY @ STAND NO. 4 2 #12 >> POWER:50-FIT-309	C-50-540
L-50-500	50E05 ESC05 ESC08 ESC09	2"	6	#10	XHHW-2	1	#10	XHHW-2	FR: WIREWAY @ STAND NO. 1 TO: MCC-F VIA MH-E10, MH-E05 2 #10 >> LPBF-22: RECEPTACLE 4 #10 >> LPBF-20, 42: LIGHTING	 L-50-002 L-50-001
P-50-110	50E02	1"	3 2 2	#10 #12 #14	XHHW-2 XHHW-2 XHHW-2	1	#10	XHHW-2	FR: 50-PMP-121 TO: JB @ 50-PMP-121 3 #10 >> POWER: 50-PMP-121 2 #12 >> CONTROL: 50-MWH-121 2 #14 >> CONTROL: 50-TSH-121	C-50-111
P-50-111	50E02 ESC03 ESC05	1"	3	#10	XHHW-2	1	#10	XHHW-2	FR: JB @ 50-PMP-121 TO: WIREWAY @ STAND NO. 3 3 #10 >> POWER: 50-PMP-121	P-50-530 P-50-110
P-50-120	50E02	0.75"	3 2 2	#10 #12 #14	XHHW-2 XHHW-2 XHHW-2	1	#10	XHHW-2	FR: 50-PMP-122 TO: JB @ 50-PMP-122 3 #10 >> POWER: 50-PMP-122 2 #12 >> CONTROL: 50-MWH-122 2 #14 >> CONTROL: 50-TSH-122	C-50-121
P-50-121	50E02 ESC03 ESC05	1"	3	#10	XHHW-2	1	#10	XHHW-2	FR: JB @ 50-PMP-122 TO: WIREWAY @ STAND NO. 3 3 #10 >> POWER: 50-PMP-122	P-50-532 P-50-120
P-50-130	50E02	0.75"	3 2 2	#10 #12 #14	XHHW-2 XHHW-2 XHHW-2	1	#10	XHHW-2	FR: 50-PMP-123 TO: JB @ 50-PMP-123 3 #10 >> POWER: 50-PMP-123 2 #12 >> CONTROL: 50-MWH-123 2 #14 >> CONTROL: 50-TSH-123	C-50-131
P-50-131	50E02 ESC03 ESC05	1"	3	#10	XHHW-2	1	#10	XHHW-2	FR: JB @ 50-PMP-123 TO: WIREWAY @ STAND NO. 4 3 #10 >> POWER: 50-PMP-123	P-50-540 P-50-130
P-50-140	50E02	1"	3	#12	XHHW-2	1	#12	XHHW-2	FR: 50-EAM-124 TO: DISCONNECT SWITCH @ STAND NO. 3 3 #12 >> POWER: 50-EAM-124	P-50-141
P-50-141	50E05	0.75"	3	#12	XHHW-2	1	#12	XHHW-2	FR: DISCONNECT SWITCH ON STAND NO. 3 TO: WIREWAY @ STAND NO. 3 3 #12 >> POWER: 50-EAM-124	P-50-531 P-50-140
P-50-150	50E02	1"	3	#12	XHHW-2	1	#12	XHHW-2	FR: 50-EAM-125 TO: DISCONNECT SWITCH @ STAND NO. 4 3 #12 >> POWER: 50-EAM-125	P-50-151
P-50-151	50E05	0.75"	3	#12	XHHW-2	1	#12	XHHW-2	FR: DISCONNECT SWITCH ON STAND NO. 4 TO: WIREWAY @ STAND NO. 4 3 #12 >> POWER: 50-EAM-125	P-50-541 P-50-150
P-50-170	50E02 ESC03 ESC05	1"	3	#12	XHHW-2	1	#12	XHHW-2	FR: 50-EAM-127 TO: DISCONNECT SWITCH @ STAND NO. 3 3 #12 >> POWER: 50-EAM-127	P-50-171
P-50-171	50E05	0.75"	3	#12	XHHW-2	1	#12	XHHW-2	FR: DISCONNECT SWITCH ON STAND NO. 3 TO: WIREWAY @ STAND NO. 3 3 #12 >> POWER: 50-EAM-127	P-50-531 P-50-170
P-50-180	50E02 ESC03 ESC05	1"	3	#12	XHHW-2	1	#12	XHHW-2	FR: 50-EDR-128 TO: DISCONNECT SWITCH @ STAND NO. 3 3 #12 >> POWER: 50-EDR-128	P-50-181
P-50-181	50E05	0.75"	3	#12	XHHW-2	1	#12	XHHW-2	FR: DISCONNECT SWITCH ON STAND NO. 3 TO: WIREWAY @ STAND NO. 3 3 #12 >> POWER: 50-EDR-128	P-50-531 P-50-180
P-50-190	50E02 ESC03 ESC05	1"	3	#12	XHHW-2	1	#12	XHHW-2	FR: 50-EDR-129 TO: DISCONNECT SWITCH @ STAND NO. 4 3 #12 >> POWER: 50-EDR-129	P-50-191

REV	DATE	BY	DESCRIPTION
1	11/2013	IY	ADDENDUM NO. 4

DESIGNED AMS
DRAWN VCP
CHECKED RAM
DATE SEPT 2013

REGISTERED PROFESSIONAL ENGINEER IAN R. VARLEY No. 12079 ELECTRICAL STATE OF CALIFORNIA 9/16/2013

carollo

SAN LUIS OBISPO COUNTY

SAN LUIS OBISPO COUNTY
LOS OSOS WATER RECYCLING FACILITY PROJECT
ELECTRICAL
SLUDGE STORAGE TANKS
CONDUIT SCHEDULE- IV

VERIFY SCALES
BAR IS ONE INCH ON ORIGINAL DRAWING
0 1"
IF NOT ONE INCH ON THIS SHEET, ADJUST SCALES ACCORDINGLY

JOB NO. 8930A.11
DRAWING NO. 50E09
SHEET NO. 358 OF 549

Plot Date: 07-NOV-2013 8:45:23 AM
User: SFunckes
DesignScript: Carollo_Std_Pen_v0905.pen
PlotScale: 2:1
ColorTable: gshade.ctb
Model: Layout1
LAST SAVED BY: ejohnson
PROJECT NO. 8930A.11
FILE NAME: 8930A1150E09.dgn

CONDUIT SCHEDULE AREA 50

11/6/13

LOS OSOS WATER RECYCLING FACILITY

SLUDGE STORAGE TANKS

CONDUIT			CONDUCTORS			GROUND				
NUMBER	DWG	SIZE	#	SIZE	TYPE	#	SIZE	TYPE	DESCRIPTION	CONNECTING SEGMENTS
P-50-191	50E05	0.75"	3	#12	XHHW-2	1	#12	XHHW-2	FR: DISCONNECT SWITCH ON STAND NO. 4 TO: WIREWAY @ STAND NO. 4 3 #12 >> POWER: 50-EDR-129	P-50-541 P-50-190
P-50-210	50E02 ESC03 ESC05	1"	3	#12	XHHW-2	1	#12	XHHW-2	FR: 50-EDR-421 TO: DISCONNECT SWITCH @ STAND NO. 1 3 #12 >> POWER: 50-EDR-421	P-50-211
P-50-211	50E05	0.75"	3	#12	XHHW-2	1	#12	XHHW-2	FR: DISCONNECT SWITCH ON STAND NO. 1 TO: WIREWAY @ STAND NO. 1 3 #12 >> POWER: 50-EDR-421	P-50-512 P-50-210
P-50-220	50E02 ESC03 ESC05	1"	3	#12	XHHW-2	1	#12	XHHW-2	FR: 50-GRI-422 TO: 50-VCP-422 & STAND NO. 1 3 #12 >> POWER: 50-GRI-422	
P-50-221	50E05	0.75"	3	#12	XHHW-2	1	#12	XHHW-2	FR: 50-VCP-422 TO: WIREWAY @ STAND NO. 1 3 #12 >> POWER: 50-VCP-422	P-50-511
P-50-230	50E02	1"	3 2 2	#8 #12 #14	XHHW-2 XHHW-2 XHHW-2	1	#10	XHHW-2	FR: 50-PMP-423 TO: JB @ 50-PMP-423 3 #8 >> POWER: 50-PMP-423 2 #12 >> CONTROL: 50-MWH-423 2 #14 >> CONTROL: 50-TSH-423	C-50-291
P-50-240	50E02 ESC03 ESC05	1"	3	#12	XHHW-2	1	#12	XHHW-2	FR: 50-EDR-424 TO: DISCONNECT SWITCH @ STAND NO. 1 3 #12 >> POWER: 50-EDR-424	P-50-241
P-50-241	50E05	0.75"	3	#12	XHHW-2	1	#12	XHHW-2	FR: DISCONNECT SWITCH ON STAND NO. 1 TO: WIREWAY @ STAND NO. 1 3 #12 >> POWER: 50-EDR-424	P-50-512 P-50-240
P-50-250	50E02 ESC03 ESC05	1"	3	#12	XHHW-2	1	#12	XHHW-2	FR: 50-EDR-425 TO: DISCONNECT SWITCH @ STAND NO. 2 3 #12 >> POWER: 50-EDR-425	P-50-251
P-50-251	50E05	0.75"	3	#12	XHHW-2	1	#12	XHHW-2	FR: DISCONNECT SWITCH ON STAND NO. 2 TO: WIREWAY @ STAND NO. 2 3 #12 >> POWER: 50-EDR-425	P-50-523 P-50-250
P-50-260	50E02 ESC03 ESC05	1"	3	#12	XHHW-2	1	#12	XHHW-2	FR: 50-GRI-426 TO: 50-VCP-426 @ STAND NO. 2 3 #12 >> POWER: 50-GRI-426	P-50-521
P-50-261	50E05	0.75"	3	#12	XHHW-2	1	#12	XHHW-2	FR: 50-VCP-426 @ STAND NO. 2 TO: WIREWAY @ STAND NO. 2 3 #12 >> POWER: 50-VCP-426	
P-50-270	50E02	1"	3 2 2	#8 #12 #14	XHHW-2 XHHW-2 XHHW-2	1	#10	XHHW-2	FR: 50-PMP-427 TO: JB @ 50-PMP-427 3 #8 >> POWER: 50-PMP-427 2 #12 >> CONTROL: 50-MWH-427 2 #14 >> CONTROL: 50-TSH-427	C-50-292
P-50-280	50E02 50E03 50E05	1"	3	#12	XHHW-2	1	#12	XHHW-2	FR: 50-EDR-428 TO: DISCONNECT SWITCH @ STAND NO. 2 3 #12 >> POWER: 50-EDR-428	P-50-281
P-50-281	50E05	0.75"	3	#12	XHHW-2	1	#12	XHHW-2	FR: DISCONNECT SWITCH ON STAND NO. 2 TO: WIREWAY @ STAND NO. 2 3 #12 >> POWER: 50-EDR-428	P-50-523 P-50-280
P-50-291	50E02 50E03 50E05	1"	3	#8	XHHW-2	1	#10	XHHW-2	FR: JB @ 50-PMP-423 TO: WIREWAY @ STAND NO. 1 3 #8 >> POWER: 50-PMP-423	P-50-510 P-50-230
P-50-292	50E02 50E03 50E05	1"	3	#8	XHHW-2	1	#10	XHHW-2	FR: JB @ 50-PMP-427 TO: WIREWAY @ STAND NO. 2 3 #8 >> POWER: 50-PMP-427	P-50-520 P-50-270
P-50-310	50E03 50E05	1"	3	#4	XHHW-2	1	#6	XHHW-2	FR: 50-BLO-401 VIA J BOX TO: WIREWAY @ STAND NO. 1 3 #4 >> POWER: 50-BLO-401	P-50-511
P-50-320	50E03	1"	3	#4	XHHW-2	1	#6	XHHW-2	FR: 50-BLO-402 VIA J BOX TO: WIREWAY @ STAND NO. 2 3 #4 >> POWER: 50-BLO-402	P-50-521
P-50-330	50E03	1"	3	#4	XHHW-2	1	#6	XHHW-2	FR: 50-BLO-403 VIA J BOX TO: WIREWAY @ STAND NO. 4 3 #4 >> POWER: 50-BLO-403	P-50-532

CONDUIT SCHEDULE AREA 50

11/6/13

LOS OSOS WATER RECYCLING FACILITY

SLUDGE STORAGE TANKS

1

CONDUIT			CONDUCTORS			GROUND				
NUMBER	DWG	SIZE	#	SIZE	TYPE	#	SIZE	TYPE	DESCRIPTION	CONNECTING SEGMENTS
P-50-340	50E03 50E05	1"	3	#12	XHHW-2	1	#12	XHHW-2	FR: 50-EDR-404 TO: DISCONNECT SWTICH ON STAND NO. 1 3 #12 >> POWER: 50-EDR-404	P-50-341
P-50-341	50E05	0.75"	3	#12	XHHW-2	1	#12	XHHW-2	FR: DISCONNECT SWITCH ON STAND NO. 1 TO: WIREWAY @ STAND NO. 1 3 #12 >> POWER: 50-EDR-404	P-50-512 P-50-340
P-50-350	50E03 50E05	1"	3	#12	XHHW-2	1	#12	XHHW-2	FR: 50-EDR-405 TO: DISCONNECT SWTICH ON STAND NO. 2 3 #12 >> POWER: 50-EDR-405	P-50-351
P-50-351	50E05	0.75"	3	#12	XHHW-2	1	#12	XHHW-2	FR: DISCONNECT SWITCH ON STAND NO. 2 TO: WIREWAY @ STAND NO. 2 3 #12 >> POWER: 50-EDR-405	P-50-523 P-50-350
P-50-360	50E03 50E05	1"	3	#12	XHHW-2	1	#12	XHHW-2	FR: 50-EDR-406 TO: DISCONNECT SWTICH ON STAND NO. 4 3 #12 >> POWER: 50-EDR-406	P-50-361
P-50-361	50E05	0.75"	3	#12	XHHW-2	1	#12	XHHW-2	FR: DISCONNECT SWITCH ON STAND NO. 3 TO: WIREWAY @ STAND NO. 3 3 #12 >> POWER: 50-EDR-406	P-50-533 P-50-360
P-50-370	50E03 50E05	0.75"	3	#12	XHHW-2	1	#12	XHHW-2	FR: 50-EDR-407 TO: DISCONNECT SWTICH ON STAND NO. 2 3 #12 >> POWER: 50-EDR-407	P-50-371
P-50-371	50E05	0.75"	3	#12	XHHW-2	1	#12	XHHW-2	FR: DISCONNECT SWITCH ON STAND NO. 2 TO: WIREWAY @ STAND NO. 2 3 #12 >> POWER: 50-EDR-407	P-50-522 P-50-370
P-50-380	50E03 50E05	0.75"	3	#12	XHHW-2	1	#12	XHHW-2	FR: 50-EDR-408 TO: DISCONNECT SWTICH ON STAND NO. 3 3 #12 >> POWER: 50-EDR-408	P-50-381
P-50-381	50E05	0.75"	3	#12	XHHW-2	1	#12	XHHW-2	FR: DISCONNECT SWITCH ON STAND NO. 3 TO: WIREWAY @ STAND NO. 3 3 #12 >> POWER: 50-EDR-408	P-50-533 P-50-380
P-50-410	50E02 50E03 50E05	1"	3	#12	XHHW-2	1	#12	XHHW-2	FR: 50-EDR-411 TO: DISCONNECT SWITCH ON STAND NO. 5 3 #12 >> POWER: 50-EDR-411	P-50-411
P-50-411	50E05	0.75"	3	#12	XHHW-2	1	#12	XHHW-2	FR: DISCONNECT SWTICH ON STAND NO. 5 TO: WIREWAY @ STAND NO. 5 3 #12 >> POWER: 50-EDR-411	P-50-550 P-50-410
P-50-420	50E02 50E03 50E05	1"	3	#12	XHHW-2	1	#12	XHHW-2	FR: 50-EDR-112 TO: DISCONNECT SWITCH ON STAND NO. 5 3 #12 >> POWER: 50-EDR-412	P-50-421
P-50-421	50E05	0.75"	3	#12	XHHW-2	1	#12	XHHW-2	FR: DISCONNECT SWTICH ON STAND NO. 5 TO: WIREWAY @ STAND NO. 5 3 #12 >> POWER: 50-EDR-412	P-50-551 P-50-420
P-50-430	50E01	0.75"	3	#12	XHHW-2	1	#12	XHHW-2	FR: 50-EDM-413 TO: DISCONNECT SWITCH 3 #12 >> POWER: 50-EDM-413	P-50-431
P-50-431	50E01	1"	3	#12	XHHW-2	1	#12	XHHW-2	FR: DISCONNECT SWITCH TO: PB-01 3 #12 >> POWER: 50-EDM-413	P-50-500 P-50-430
P-50-440	50E01	0.75"	3	#12	XHHW-2	1	#12	XHHW-2	FR: 50-EDM-414 TO: DISCONNECT SWITCH 3 #12 >> POWER: 50-EDM-414	P-50-441
P-50-441	50E01	1"	3	#12	XHHW-2	1	#12	XHHW-2	FR: DISCONNECT SWITCH TO: PB-01 3 #12 >> POWER: 50-EDM-414	P-50-500 P-50-440
P-50-450	50E01	0.75"	3	#12	XHHW-2	1	#12	XHHW-2	FR: 50-EDM-415 TO: DISCONNECT SWITCH 3 #12 >> POWER: 50-EDM-415	P-50-451
P-50-451	50E01	1"	3	#12	XHHW-2	1	#12	XHHW-2	FR: DISCONNECT SWITCH TO: PB-01 3 #12 >> POWER: 50-EDM-415	P-50-501 P-50-450
P-50-460	50E01	0.75"	3	#12	XHHW-2	1	#12	XHHW-2	FR: 50-EDM-416 TO: DISCONNECT SWITCH 3 #12 >> POWER: 50-EDM-416	P-50-461

REV	DATE	BY	DESCRIPTION
1	11/2013	IV	ADDENDUM NO. 4: CONDUITS SHIFTED DOWN. NO CONDUITS ADDED OR DELETED.

DESIGNED AMS
DRAWN VCP
CHECKED RAM
DATE SEPT 2013

REGISTERED PROFESSIONAL ENGINEER IAN R. VARLEY No. 12879 ELECTRICAL STATE OF CALIFORNIA 9/16/2013

carollo®

SAN LUIS OBISPO COUNTY

SAN LUIS OBISPO COUNTY
LOS OSOS WATER RECYCLING FACILITY PROJECT
ELECTRICAL
SLUDGE STORAGE TANKS
CONDUIT SCHEDULE- V

VERIFY SCALES
BAR IS ONE INCH ON ORIGINAL DRAWING
0 1"
IF NOT ONE INCH ON THIS SHEET, ADJUST SCALES ACCORDINGLY

JOB NO. 8930A.11
DRAWING NO. 50E10
SHEET NO. 359 OF 549

PROJECT NO. 8930A.11 FILE NAME: 8930A1150E10.dgn

LAST SAVED BY: ejohnson Model: Layout1 ColorTable: gshade.ctb DesignScript: Carollo_Std_Pen_v0905.pen PlotScale: 2:1 User: EJohnson Plot Date: 12-NOV-2013 7:36:12 AM

CONDUIT SCHEDULE AREA 50

11/6/13

LOS OSOS WATER RECYCLING FACILITY

SLUDGE STORAGE TANKS

CONDUIT			CONDUCTORS			GROUND					
NUMBER	DWG	SIZE	#	SIZE	TYPE	#	SIZE	TYPE	DESCRIPTION		CONNECTING SEGMENTS
P-50-461	50E01	1"	3	#12	XHHW-2	1	#12	XHHW-2	FR:	DISCONNECT SWITCH	P-50-501
									TO:	PB-01	
									3 #12	>> POWER: 50-EDM-416	P-50-460
P-50-470	50E03 50E05	1"	3	#12	XHHW-2	1	#12	XHHW-2	FR:	50-EDR-417	P-50-471
									TO:	DISCONNECT SWTICH ON STAND NO. 5	
									3 #12	>> POWER: 50-EDR-417	
P-50-471	50E05	0.75"	3	#12	XHHW-2	1	#12	XHHW-2	FR:	DISCONNECT SWTICH ON STAND NO. 5	P-50-550
									TO:	WIREWAY @ STAND NO. 5	
									3 #12	>> POWER: 50-EDR-417	P-50-470
P-50-480	50E02 50E03 50E05	1"	3	#12	XHHW-2	1	#12	XHHW-2	FR:	50-EDR-418	P-50-481
									TO:	DISCONNECT SWTICH ON STAND NO. 5	
									3 #12	>> POWER: 50-EDR-418	
P-50-481	50E05	0.75"	3	#12	XHHW-2	1	#12	XHHW-2	FR:	DISCONNECT SWTICH ON STAND NO. 5	P-50-551
									TO:	WIREWAY @ STAND NO. 5	
									3 #12	>> POWER: 50-EDR-418	P-50-480
P-50-490	50E05	2"	3	MFR	CABLE	1	#14	XHHW-2	FR:	50-VCP-419	
									TO:	50-PMP-419A & 50-PMP-419B	
						1	MFR		>>	50-PMP-419A	
						1	MFR		>>	50-PMP-419B	
						1	MFR		>>	50-LE-419	
P-50-491	50E02 50E05	1"	3	#10	XHHW-2	1	#10	XHHW-2	FR:	50-VCP-419	P-50-541
									TO:	WIREWAY @ STAND NO. 4	
									3 #10	>> POWER: 50-VCP-419	
P-50-500	51E05 ESC08 ESC09	2"	6	#12	XHHW-2	2	#12	XHHW-2	FR:	PB-01	
									TO:	MCC-E VIA MH-E05	
									3 #12	>> POWER: 50-EDM-413	P-50-431
									3 #12	>> POWER: 50-EDM-414	P-50-441
P-50-501	51E05 ESC08 ESC09	2"	6	#12	XHHW-2	2	#12	XHHW-2	FR:	PB-01	
									TO:	MCC-F VIA MH-E05	
									3 #12	>> POWER: 50-EDM-415	P-50-451
									3 #12	>> POWER: 50-EDM-416	P-50-461
P-50-510	50E05	2"	3	#8	XHHW-2	1	#10	XHHW-2	FR:	WIREWAY @ STAND NO. 1	P-50-560
									TO:	MH-E10	
									3 #8	>> POWER: 50-PMP-423	P-50-291
P-50-511	50E05	2"	3 3	#4 #12	XHHW-2 XHHW-2	1 1	#6 #12	XHHW-2 XHHW-2	FR:	WIREWAY @ STAND NO. 1	P-50-563
									TO:	MH-E10	
									3 #12	>> POWER: 50-VCP-422	P-50-221
									3 #4	>> POWER: 50-BLO-401	P-50-310
P-50-512	50E05 ESC08 ESC09 50E05 51E05	2"	9	#12	XHHW-2	3	#12	XHHW-2	FR:	WIREWAY @ STAND NO. 1	
									TO:	MCC-E VIA MH-E10, MH-E05	
									3 #12	>> POWER: 50-EDR-421	P-50-211
									3 #12	>> POWER: 50-EDR-424	P-50-241
									3 #12	>> POWER: 50-EDR-404	P-50-341
P-50-520	50E05 ESC05	2"	3	#8	XHHW-2	1	#10	XHHW-2	FR:	WIREWAY @ STAND NO. 2	P-50-561
									TO:	MH-E10	
									3 #8	>> POWER: 50-PMP-427	P-50-292
P-50-521	50E05 ESC08	2"	3 3	#4 #12	XHHW-2 XHHW-2	1 1	#6 #12	XHHW-2 XHHW-2	FR:	WIREWAY @ STAND NO. 2	P-50-561
									TO:	MH-E10	
									3 #4	>> POWER: 50-BLOW-402	P-50-320
									3 #12	>> POWER: 50-GRI-426	P-50-260
P-50-522	50E05 ESC08	2"	3	#12	XHHW-2	1	#12	XHHW-2	FR:	WIREWAY @ STAND NO. 2	P-50-564
									TO:	MH-E10	
									3 #12	>> POWER: 50-EDR-407	P-50-371
P-50-523	50E05 ESC08 ESC09 51E05	2"	9	#12	XHHW-2	3	#12	XHHW-2	FR:	WIREWAY @ STAND NO. 2	
									TO:	MCC-F VIA MH-E10, MH-E05	
									3 #12	>> POWER: 50-EDR-428	P-50-281
									3 #12	>> POWER: 50-EDR-425	P-50-251
									3 #12	>> POWER: 50-EDR-405	P-50-351
P-50-530	50E05	2"	3	#10	XHHW-2	1	#10	XHHW-2	FR:	WIREWAY @ STAND NO. 3	P-50-560
									TO:	MH-E10	
									3 #10	>> POWER: 50-PMP-121	P-50-111
P-50-531	ESC08	0.75"	9	#12	XHHW-2	1	#12	XHHW-2	FR:	WIREWAY @ STAND NO. 3	P-50-562
									TO:	MH-E10	
									3 #12	>> POWER: 50-EDR-128	P-50-181
									3 #12	>> POWER: 50-EAM-124	P-50-141
									3 #12	>> POWER: 50-EAM-127	P-50-171

CONDUIT SCHEDULE AREA 50

11/6/13

LOS OSOS WATER RECYCLING FACILITY

SLUDGE STORAGE TANKS

CONDUIT			CONDUCTORS			GROUND					
NUMBER	DWG	SIZE	#	SIZE	TYPE	#	SIZE	TYPE	DESCRIPTION		CONNECTING SEGMENTS
P-50-532	50E05 ESC08 ESC09 51E05	2"	3 3	#4 #10	XHHW-2 XHHW-2	1 1	#6 #12	XHHW-2 XHHW-2	FR:	WIREWAY @ STAND NO. 3	
									TO:	MCC-F VIA MH-E10, MH-E05	
									3 #4	>> POWER: 50-BLO-403	P-50-330
									3 #10	>> POWER: 50-PMP-122	P-50-121
P-50-533	50E05 ESC08 ESC09 51E05	2"	9	#12	XHHW-2	3	#12	XHHW-2	FR:	WIREWAY @ STAND NO. 3	
									TO:	MCC-F VIA MH-E10, MH-E05	
									3 #12	>> POWER: 50-EDR-408	P-50-381
									3 #12	>> POWER: 50-EDR-406	P-50-361
									3 #12	>> POWER: 50-EAM-127	P-50-171
P-50-540	50E05 ESC08	2"	3	#10	XHHW-2	1	#10	XHHW-2	FR:	WIREWAY @ STAND NO. 4	P-50-565
									TO:	MH-E10	
									3 #10	>> POWER: 50-PMP-123	P-50-131
P-50-541	50E05 ESC08 ESC09 51E05	2"	3 6	#10 #12	XHHW-2 XHHW-2	3	#10	XHHW-2	FR:	WIREWAY @ STAND NO. 4	
									TO:	MCC-F VIA MH-E10, MH-E05	
									3 #12	>> POWER: 50-EDR-129	P-50-191
									3 #12	>> POWER: 50-EAM-125	P-50-151
									3 #10	>> POWER: 50-VCP-419	P-50-491
P-50-550	50E05	2"	6	#12	XHHW-2	2	#12	XHHW-2	FR:	WIREWAY @ STAND NO. 5	P-50-562
									TO:	MH-E10	
									3 #12	>> POWER: 50-EDR-411	P-50-411
									3 #12	>> POWER: 50-EDR-417	P-50-471
P-50-551	50E05 ESC08 ESC09 51E05	2"	6	#12	XHHW-2	2	#12	XHHW-2	FR:	WIREWAY @ STAND NO. 5	
									TO:	MCC-F VIA MH-E10, MH-E05	
									3 #12	>> POWER: 50-EDR-412	P-50-421
									3 #12	>> POWER: 50-EDR-418	P-50-481
P-50-560	ESC08 ESC09 51E05	2"	3 3	#8 #10	XHHW-2 XHHW-2	1 1	#10 #12	XHHW-2 XHHW-2	FR:	MH-E10	
									TO:	MCC-E VIA MH-E05	
									3 #8	>> POWER: 50-PMP-423	P-50-510
									3 #10	>> POWER: 50-PMP-121	P-50-530
P-50-561	ESC08 ESC09 51E05	2"	3 3	#4 #8	XHHW-2 XHHW-2	1 1	#10 #12	XHHW-2 XHHW-2	FR:	MH-E10	
									TO:	MCC-F VIA MH-E05	
									3 #8	>> POWER: 50-PMP-427	P-50-520
									3 #4	>> POWER: 50-BLOW-402	P-50-521
P-50-562	ESC08 ESC09 51E05	2"	9	#12	XHHW-2	1	#12	XHHW-2	FR:	MH-E10	
									TO:	MCC-E VIA MH-E05	
									3 #12	>> POWER: 50-EAM-124	P-50-531
									3 #12	>> POWER: 50-EDR-411	P-50-550
									3 #12	>> POWER: 50-EDR-417	P-50-550
P-50-563	ESC08 ESC09 51E05	2"	3 3	#4 #12	XHHW-2 XHHW-2	1	#6	XHHW-2	FR:	MH-E10	
									TO:	MCC-E VIA MH-E05	
									3 #12	>> POWER: 50-VCP-422	P-50-511
									3 #4	>> POWER: 50-BLO-401	P-50-511
P-50-564	ESC08 ESC09 51E05	2"	6	#12	XHHW-2	3	#12	XHHW-2	FR:	MH-E10	
									TO:	MCC-E VIA MH-E05	
									3 #12	>> POWER: 50-EDR-407	P-50-522
									3 #12	>> POWER: 50-VCP-422	P-50-511
P-50-565	ESC08 ESC09 51E05	2"	3 3	#10 #12	XHHW-2 XHHW-2	2	#10	XHHW-2	FR:	MH-E10	
									TO:	MCC-F VIA MH-E05	
									3 #12	>> POWER: 50-GRI-426	P-50-521
									3 #10	>> POWER: 50-PMP-123	P-50-540
S-50-001	50E05	0.75"	1	2/CS-#16		1	#14	XHHW-2	FR:	50-FIT-425	S-50-510
									TO:	WIREWAY @ STAND NO. 1	
						1	2/CS-#16		>>	SIGNAL: 50-FIT-425	
S-50-002	50E05	0.75"	1	2/CS-#16		1	#14	XHHW-2	FR:	50-FIT-429	S-50-510
									TO:	WIREWAY @ STAND NO. 1	
						1	2/CS-#16		>>	SIGNAL: 50-FIT-429	
S-50-003	50E05	0.75"	1	2/CS-#16		1	#14	XHHW-2	FR:	50-FIT-126	S-50-520
									TO:	WIREWAY @ STAND NO. 2	
						1	2/CS-#16		>>	SIGNAL: 50-FIT-126	
S-50-004	50E05	0.75"	1	2/CS-#16		1	#14	XHHW-2	FR:	50-FIT-125	S-50-520
									TO:	WIREWAY @ STAND NO. 2	
						1	2/CS-#16		>>	SIGNAL: 50-FIT-125	
S-50-005	50E05	0.75"	1	2/CS-#16		1	#14	XHHW-2	FR:	50-FIT-124	S-50-520
									TO:	WIREWAY @ STAND NO. 2	
						1	2/CS-#16		>>	SIGNAL: 50-FIT-124	

REV	DATE	BY	DESCRIPTION
1	11/2013	IV	ADDENDUM NO.4: CONDUITS SHIFTED DOWN. NO CONDUITS ADDED OR DELETED.

DESIGNED AMS
DRAWN VCP
CHECKED RAM
DATE SEPT 2013

REGISTERED PROFESSIONAL ENGINEER JAN R. VARLEY No. 12079 ELECTRICAL STATE OF CALIFORNIA 9/16/2013

carollo

SAN LUIS OBISPO COUNTY

SAN LUIS OBISPO COUNTY
LOS OSOS WATER RECYCLING FACILITY PROJECT
ELECTRICAL
SLUDGE STORAGE TANKS
CONDUIT SCHEDULE- VI

VERIFY SCALES
BAR IS ONE INCH ON ORIGINAL DRAWING
0 1"
IF NOT ONE INCH ON THIS SHEET, ADJUST SCALES ACCORDINGLY

JOB NO. 8930A.11
DRAWING NO. 50E11
SHEET NO. 360 OF 549

PROJECT NO. 8930A.11 FILE NAME: 8930A1150E11.dgn

Plot Date: 12-NOV-2013 7:33:51 AM User: EJohnson PlotScale: 2:1 DesignScript: Carollo_Std_Pen_v0905.pen ColorTable: gshade.ctb Model: Layout1 LAST SAVED BY: ejohnson

CONDUIT SCHEDULE AREA 50

11/6/13

LOS OSOS WATER RECYCLING FACILITY

SLUDGE STORAGE TANKS

CONDUIT			CONDUCTORS			GROUND				
NUMBER	DWG	SIZE	#	SIZE	TYPE	#	SIZE	TYPE	DESCRIPTION	CONNECTING SEGMENTS
S-50-006	50E05	0.75"	1	2/CS-#16		1	#14	XHHW-2	FR: 50-FIT-127 TO: WIREWAY @ STAND NO. 2 1 2/CS-#16 >> SIGNAL: 50-FIT-127	S-50-520
S-50-007	50E05	0.75"	1	2/CS-#16		1	#14	XHHW-2	FR: 50-FIT-309 TO: WIREWAY @ STAND NO. 4 1 2/CS-#16 >> SIGNAL: 50-FIT-309	S-50-540
S-50-124	50E02	1"	1	MFR	CABLE	1	#14	XHHW-2	FR: 50-FE-124 TO: 50-FIT-124 1 MFR >> SIGNAL: 50-FIT-124	
S-50-125	50E02	1"	1	MFR	CABLE	1	#14	XHHW-2	FR: 50-FE-125 TO: 50-FIT-125 1 MFR >> SIGNAL: 50-FIT-125	
S-50-126	50E02	1"	1	MFR	CABLE	1	#14	XHHW-2	FR: 50-FE-126 TO: 50-FIT-126 1 MFR >> SIGNAL: 50-FIT-126	
S-50-127	50E02 50E03 50E05	1"	1	MFR	CABLE	1	#14	XHHW-2	FR: 50-FE-127 TO: 50-FIT-127 1 MFR >> SIGNAL: 50-FIT-127	
S-50-140	50E02 50E03 50E05	1"	2	2/CS-#16		1	#14	XHHW-2	FR: 50-EAM-124 TO: WIREWAY @ STAND NO. 3 2 2/CS-#16 >> SIGNAL: 50-EAM-124	S-50-530
S-50-150	50E02 50E03 50E05	1"	2	2/CS-#16		1	#14	XHHW-2	FR: 50-EAM-125 TO: WIREWAY @ STAND NO. 4 2 2/CS-#16 >> SIGNAL: 50-EAM-125	S-50-540
S-50-170	50E02 50E03 50E05	1"	2	2/CS-#16		1	#14	XHHW-2	FR: 50-EAM-127 TO: WIREWAY @ STAND NO. 2 2 2/CS-#16 >> SIGNAL: 50-EAM-127	S-50-520
S-50-250	50E02	1"	1	MFR	CABLE	1	#14	XHHW-2	FR: 50-FE-425 TO: 50-FIT-425 1 MFR >> SIGNAL: 50-FIT-425	
S-50-290	50E02	1"	1	MFR	CABLE	1	#14	XHHW-2	FR: 50-FE-429 TO: 50-FIT-429 1 MFR >> SIGNAL: 50-FIT-429	
S-50-410	50E03 50E05	0.75"	1	2/CS-#16		1	#14	XHHW-2	FR: 50-PDIT-411 TO: WIREWAY @ STAND NO. 5 1 2/CS-#16 >> SIGNAL: 50-PDIT-411	S-50-550
S-50-420	50E03 50E05	0.75"	1	2/CS-#16		1	#14	XHHW-2	FR: 50-PDIT-412 TO: WIREWAY @ STAND NO. 5 1 2/CS-#16 >> SIGNAL: 50-PDIT-412	S-50-550
S-50-423	50E02	1"	1	MFR	CABLE	1	#14	XHHW-2	FR: 50-TE-423A TO: WIREWAY @ STAND NO. 1 1 MFR >> SIGNAL: 50-TSH-423A	
S-50-427	50E02	1"	1	MFR	CABLE	1	#14	XHHW-2	FR: 50-TE-427A TO: WIREWAY @ STAND NO. 2 1 MFR >> SIGNAL: 50-TSH-427A	
S-50-430		0.75"	1	2/CS-#16		1	#14	XHHW-2	FR: 50-EDM-413 TO: JUNCTION BOX 1 2/CS-#16 >> SIGNAL: 50-EDM-413	S-50-431
S-50-431		0.75"	1	2/CS-#16		1	#14	XHHW-2	FR: JUNCTION BOX TO: PB-02 1 2/CS-#16 >> SIGNAL: 50-EDM-413	S-50-500 S-50-430
S-50-440		0.75"	1	2/CS-#16		1	#14	XHHW-2	FR: 50-EDM-414 TO: JUNCTION BOX 1 2/CS-#16 >> SIGNAL: 50-EDM-414	S-50-441
S-50-441		0.75"	1	2/CS-#16		1	#14	XHHW-2	FR: JUNCTION BOX TO: PB-02 1 2/CS-#16 >> SIGNAL: 50-EDM-414	S-50-500 S-50-440
S-50-450		0.75"	1	2/CS-#16		1	#14	XHHW-2	FR: 50-EDM-415 TO: JUNCTION BOX 1 2/CS-#16 >> SIGNAL: 50-EDM-415	S-50-451

CONDUIT SCHEDULE AREA 50

11/6/13

LOS OSOS WATER RECYCLING FACILITY

SLUDGE STORAGE TANKS

CONDUIT			CONDUCTORS			GROUND				
NUMBER	DWG	SIZE	#	SIZE	TYPE	#	SIZE	TYPE	DESCRIPTION	CONNECTING SEGMENTS
S-50-451		0.75"	1	2/CS-#16		1	#14	XHHW-2	FR: JUNCTION BOX TO: PB-02 1 2/CS-#16 >> SIGNAL: 50-EDM-415	S-50-500 S-50-450
S-50-460		0.75"	1	2/CS-#16		1	#14	XHHW-2	FR: 50-EDM-416 TO: JUNCTION BOX 1 2/CS-#16 >> SIGNAL: 50-EDM-416	S-50-461
S-50-461		0.75"	1	2/CS-#16		1	#14	XHHW-2	FR: JUNCTION BOX TO: PB-02 1 2/CS-#16 >> SIGNAL: 50-EDM-416	S-50-500 S-50-460
S-50-490	50E03	1"	1	MFR	CABLE	1	#14	XHHW-2	FR: 50-FE-309 TO: 50-FIT-309 1 MFR >> SIGNAL: 50-FIT-309	
S-50-500	50E01 ESC03 ESC08 ESC09	2"	4	2/CS-#16		1	#14	XHHW-2	FR: PB-02 TO: PCM-2 1 2/CS-#16 >> SIGNAL: 50-EDM-413 1 2/CS-#16 >> SIGNAL: 50-EDM-414 1 2/CS-#16 >> SIGNAL: 50-EDM-415 1 2/CS-#16 >> SIGNAL: 50-EDM-416	S-50-431 S-50-441 S-50-451 S-50-461
S-50-510	50E05	0.75"	2	2/CS-#16		1	#14	XHHW-2	FR: WIREWAY @ STAND NO. 1 TO: HH-S10 1 2/CS-#16 >> SIGNAL: 50-FIT-425 1 2/CS-#16 >> SIGNAL: 50-FIT-429	S-50-560 S-50-001 S-50-002
S-50-520	50E05	1.5"	6	2/CS-#16		1	#14	XHHW-2	FR: WIREWAY @ STAND NO. 2 TO: HH-S10 1 2/CS-#16 >> SIGNAL: 50-FIT-126 1 2/CS-#16 >> SIGNAL: 50-FIT-125 1 2/CS-#16 >> SIGNAL: 50-FIT-124 1 2/CS-#16 >> SIGNAL: 50-FIT-127 2 2/CS-#16 >> SIGNAL: 50-EAM-127	S-50-560 S-50-003 S-50-004 S-50-005 S-50-006 S-50-170
S-50-530	50E05 ESC08	2"	2	2/CS-#16		1	#14	XHHW-2	FR: WIREWAY @ STAND NO. 3 TO: HH-S10 2 2/CS-#16 >> SIGNAL: 50-EAM-124	S-50-560 S-50-140
S-50-540	50E05	2"	3	2/CS-#16		1	#14	XHHW-2	FR: WIREWAY @ STAND NO. 4 TO: HH-S10 2 2/CS-#16 >> SIGNAL: 50-EAM-125 1 2/CS-#16 >> SIGNAL: 50-FIT-309	S-50-560 S-50-150 S-50-007
S-50-550	50E05 ESC08	2"	2	2/CS-#16		1	#14	XHHW-2	FR: WIREWAY @ STAND NO. 5 TO: HH-S10 1 2/CS-#16 >> SIGNAL: 50-PDIT-411 1 2/CS-#16 >> SIGNAL: 50-PDIT-412	S-50-560 S-50-410 S-50-420
S-50-560	ESC09 ESC08 51E06	2"	15	2/CS-#16		1	#14	XHHW-2	FR: HH-S10 TO: PCM-2 VIA MH-S05 1 2/CS-#16 >> SIGNAL: 50-FIT-425 1 2/CS-#16 >> SIGNAL: 50-FIT-429 1 2/CS-#16 >> SIGNAL: 50-FIT-126 1 2/CS-#16 >> SIGNAL: 50-FIT-125 1 2/CS-#16 >> SIGNAL: 50-FIT-124 1 2/CS-#16 >> SIGNAL: 50-FIT-127 2 2/CS-#16 >> SIGNAL: 50-EAM-127 2 2/CS-#16 >> SIGNAL: 50-EAM-124 2 2/CS-#16 >> SIGNAL: 50-EAM-125 1 2/CS-#16 >> SIGNAL: 50-FIT-309 1 2/CS-#16 >> SIGNAL: 50-PDIT-411 1 2/CS-#16 >> SIGNAL: 50-PDIT-412	S-50-510 S-50-510 S-50-520 S-50-520 S-50-520 S-50-520 S-50-520 S-50-530 S-50-540 S-50-540 S-50-550 S-50-550
X-50-500	ESC09 ESC08 51E06	2"	1	PULL	ROPE				FR: PB-01 TO: STUP UP AT CONTROL ROOM VIA MH-E05 1 PULL >> SPARE CONTROL	
X-50-510	50E05	2"	1	PULL	ROPE				FR: WIREWAY @ STAND NO. 1 TO: MH-E05 VIA MH-E10 1 PULL >> POWER/CONTROL, SPARE	
X-50-511	50E05	2"	1	PULL	ROPE				FR: WIREWAY @ STAND NO. 1 TO: HH-S10 1 PULL >> SIGNAL, SPARE	
X-50-515	50E05	2"	1	PULL	ROPE				FR: WIREWAY @ STAND NO. 1 TO: WIREWAY @ STAND NO. 2 1 PULL >> POWER/CONTROL, SPARE	

REV	DATE	BY	DESCRIPTION
1	11/2013	IV	ADDENDUM NO.4: CONDUITS SHIFTED DOWN. NO CONDUITS ADDED OR DELETED.

DESIGNED AMS
DRAWN VCP
CHECKED RAM
DATE SEPT 2013

REGISTERED PROFESSIONAL ENGINEER JAN R. VARLEY No. 12079 ELECTRICAL STATE OF CALIFORNIA 9/16/2013

carollo

SAN LUIS OBISPO COUNTY

SAN LUIS OBISPO COUNTY
LOS OSOS WATER RECYCLING FACILITY PROJECT
ELECTRICAL
SLUDGE STORAGE TANKS
CONDUIT SCHEDULE- VII

VERIFY SCALES
BAR IS ONE INCH ON ORIGINAL DRAWING
0 1"
IF NOT ONE INCH ON THIS SHEET, ADJUST SCALES ACCORDINGLY

JOB NO. 8930A.11
DRAWING NO. 50E12
SHEET NO. 361 OF 549

PROJECT NO. 8930A.11 FILE NAME: 8930A1150E12.dgn

LAST SAVED BY: ejohnson
Model: Layout1 ColorTable: gshade.ctb DesignScript: Carollo_Std_Pen_v0905.pen PlotScale: 2:1
User: EJohnson Plot Date: 12-NOV-2013 7:38:40 AM

CONDUIT SCHEDULE AREA 50

11/6/13

LOS OSOS WATER RECYCLING FACILITY

SLUDGE STORAGE TANKS

CONDUIT			CONDUCTORS			GROUND				
NUMBER	DWG	SIZE	#	SIZE	TYPE	#	SIZE	TYPE	DESCRIPTION	CONNECTING SEGMENTS
S-50-006	50E05	0.75"	1	2/CS-#16		1	#14	XHHW-2	FR: 50-FIT-127 TO: WIREWAY @ STAND NO. 2 1 2/CS-#16 >> SIGNAL: 50-FIT-127	S-50-520
S-50-007	50E05	0.75"	1	2/CS-#16		1	#14	XHHW-2	FR: 50-FIT-309 TO: WIREWAY @ STAND NO. 4 1 2/CS-#16 >> SIGNAL: 50-FIT-309	S-50-540
S-50-124	50E02	1"	1	MFR	CABLE	1	#14	XHHW-2	FR: 50-FE-124 TO: 50-FIT-124 1 MFR >> SIGNAL: 50-FIT-124	
S-50-125	50E02	1"	1	MFR	CABLE	1	#14	XHHW-2	FR: 50-FE-125 TO: 50-FIT-125 1 MFR >> SIGNAL: 50-FIT-125	
S-50-126	50E02	1"	1	MFR	CABLE	1	#14	XHHW-2	FR: 50-FE-126 TO: 50-FIT-126 1 MFR >> SIGNAL: 50-FIT-126	
S-50-127	50E02 50E03 50E05	1"	1	MFR	CABLE	1	#14	XHHW-2	FR: 50-FE-127 TO: 50-FIT-127 1 MFR >> SIGNAL: 50-FIT-127	
S-50-140	50E02 50E03 50E05	1"	2	2/CS-#16		1	#14	XHHW-2	FR: 50-EAM-124 TO: WIREWAY @ STAND NO. 3 2 2/CS-#16 >> SIGNAL: 50-EAM-124	S-50-530
S-50-150	50E02 50E03 50E05	1"	2	2/CS-#16		1	#14	XHHW-2	FR: 50-EAM-125 TO: WIREWAY @ STAND NO. 4 2 2/CS-#16 >> SIGNAL: 50-EAM-125	S-50-540
S-50-170	50E02 50E03 50E05	1"	2	2/CS-#16		1	#14	XHHW-2	FR: 50-EAM-127 TO: WIREWAY @ STAND NO. 2 2 2/CS-#16 >> SIGNAL: 50-EAM-127	S-50-520
S-50-250	50E02	1"	1	MFR	CABLE	1	#14	XHHW-2	FR: 50-FE-425 TO: 50-FIT-425 1 MFR >> SIGNAL: 50-FIT-425	
S-50-290	50E02	1"	1	MFR	CABLE	1	#14	XHHW-2	FR: 50-FE-429 TO: 50-FIT-429 1 MFR >> SIGNAL: 50-FIT-429	
S-50-410	50E03 50E05	0.75"	1	2/CS-#16		1	#14	XHHW-2	FR: 50-PDIT-411 TO: WIREWAY @ STAND NO. 5 1 2/CS-#16 >> SIGNAL: 50-PDIT-411	S-50-550
S-50-420	50E03 50E05	0.75"	1	2/CS-#16		1	#14	XHHW-2	FR: 50-PDIT-412 TO: WIREWAY @ STAND NO. 5 1 2/CS-#16 >> SIGNAL: 50-PDIT-412	S-50-550
S-50-423	50E02	1"	1	MFR	CABLE	1	#14	XHHW-2	FR: 50-TE-423A TO: WIREWAY @ STAND NO. 1 1 MFR >> SIGNAL: 50-TSH-423A	
S-50-427	50E02	1"	1	MFR	CABLE	1	#14	XHHW-2	FR: 50-TE-427A TO: WIREWAY @ STAND NO. 2 1 MFR >> SIGNAL: 50-TSH-427A	
S-50-430		0.75"	1	2/CS-#16		1	#14	XHHW-2	FR: 50-EDM-413 TO: JUNCTION BOX 1 2/CS-#16 >> SIGNAL: 50-EDM-413	S-50-431
S-50-431		0.75"	1	2/CS-#16		1	#14	XHHW-2	FR: JUNCTION BOX TO: PB-02 1 2/CS-#16 >> SIGNAL: 50-EDM-413	S-50-500 S-50-430
S-50-440		0.75"	1	2/CS-#16		1	#14	XHHW-2	FR: 50-EDM-414 TO: JUNCTION BOX 1 2/CS-#16 >> SIGNAL: 50-EDM-414	S-50-441
S-50-441		0.75"	1	2/CS-#16		1	#14	XHHW-2	FR: JUNCTION BOX TO: PB-02 1 2/CS-#16 >> SIGNAL: 50-EDM-414	S-50-500 S-50-440
S-50-450		0.75"	1	2/CS-#16		1	#14	XHHW-2	FR: 50-EDM-415 TO: JUNCTION BOX 1 2/CS-#16 >> SIGNAL: 50-EDM-415	S-50-451

CONDUIT SCHEDULE AREA 50

11/6/13

LOS OSOS WATER RECYCLING FACILITY

SLUDGE STORAGE TANKS

CONDUIT			CONDUCTORS			GROUND				
NUMBER	DWG	SIZE	#	SIZE	TYPE	#	SIZE	TYPE	DESCRIPTION	CONNECTING SEGMENTS
S-50-451		0.75"	1	2/CS-#16		1	#14	XHHW-2	FR: JUNCTION BOX TO: PB-02 1 2/CS-#16 >> SIGNAL: 50-EDM-415	S-50-500 S-50-450
S-50-460		0.75"	1	2/CS-#16		1	#14	XHHW-2	FR: 50-EDM-416 TO: JUNCTION BOX 1 2/CS-#16 >> SIGNAL: 50-EDM-416	S-50-461
S-50-461		0.75"	1	2/CS-#16		1	#14	XHHW-2	FR: JUNCTION BOX TO: PB-02 1 2/CS-#16 >> SIGNAL: 50-EDM-416	S-50-500 S-50-460
S-50-490	50E03	1"	1	MFR	CABLE	1	#14	XHHW-2	FR: 50-FE-309 TO: 50-FIT-309 1 MFR >> SIGNAL: 50-FIT-309	
S-50-500	50E01 ESC03 ESC08 ESC09	2"	4	2/CS-#16		1	#14	XHHW-2	FR: PB-02 TO: PCM-2 1 2/CS-#16 >> SIGNAL: 50-EDM-413 1 2/CS-#16 >> SIGNAL: 50-EDM-414 1 2/CS-#16 >> SIGNAL: 50-EDM-415 1 2/CS-#16 >> SIGNAL: 50-EDM-416	S-50-431 S-50-441 S-50-451 S-50-461
S-50-510	50E05	0.75"	2	2/CS-#16		1	#14	XHHW-2	FR: WIREWAY @ STAND NO. 1 TO: HH-S10 1 2/CS-#16 >> SIGNAL: 50-FIT-425 1 2/CS-#16 >> SIGNAL: 50-FIT-429	S-50-560 S-50-001 S-50-002
S-50-520	50E05	1.5"	6	2/CS-#16		1	#14	XHHW-2	FR: WIREWAY @ STAND NO. 2 TO: HH-S10 1 2/CS-#16 >> SIGNAL: 50-FIT-126 1 2/CS-#16 >> SIGNAL: 50-FIT-125 1 2/CS-#16 >> SIGNAL: 50-FIT-124 1 2/CS-#16 >> SIGNAL: 50-FIT-127 2 2/CS-#16 >> SIGNAL: 50-EAM-127	S-50-560 S-50-003 S-50-004 S-50-005 S-50-006 S-50-170
S-50-530	50E05 ESC08	2"	2	2/CS-#16		1	#14	XHHW-2	FR: WIREWAY @ STAND NO. 3 TO: HH-S10 2 2/CS-#16 >> SIGNAL: 50-EAM-124	S-50-560 S-50-140
S-50-540	50E05	2"	3	2/CS-#16		1	#14	XHHW-2	FR: WIREWAY @ STAND NO. 4 TO: HH-S10 2 2/CS-#16 >> SIGNAL: 50-EAM-125 1 2/CS-#16 >> SIGNAL: 50-FIT-309	S-50-560 S-50-150 S-50-007
S-50-550	50E05 ESC08	2"	2	2/CS-#16		1	#14	XHHW-2	FR: WIREWAY @ STAND NO. 5 TO: HH-S10 1 2/CS-#16 >> SIGNAL: 50-PDIT-411 1 2/CS-#16 >> SIGNAL: 50-PDIT-412	S-50-560 S-50-410 S-50-420
S-50-560	ESC09 ESC08 51E06	2"	15	2/CS-#16		1	#14	XHHW-2	FR: HH-S10 TO: PCM-2 VIA MH-S05 1 2/CS-#16 >> SIGNAL: 50-FIT-425 1 2/CS-#16 >> SIGNAL: 50-FIT-429 1 2/CS-#16 >> SIGNAL: 50-FIT-126 1 2/CS-#16 >> SIGNAL: 50-FIT-125 1 2/CS-#16 >> SIGNAL: 50-FIT-124 1 2/CS-#16 >> SIGNAL: 50-FIT-127 2 2/CS-#16 >> SIGNAL: 50-EAM-127 2 2/CS-#16 >> SIGNAL: 50-EAM-124 2 2/CS-#16 >> SIGNAL: 50-EAM-125 1 2/CS-#16 >> SIGNAL: 50-FIT-309 1 2/CS-#16 >> SIGNAL: 50-PDIT-411 1 2/CS-#16 >> SIGNAL: 50-PDIT-412	S-50-510 S-50-510 S-50-520 S-50-520 S-50-520 S-50-520 S-50-520 S-50-530 S-50-540 S-50-540 S-50-550 S-50-550
X-50-500	ESC09 ESC08 51E06	2"	1	PULL	ROPE				FR: PB-01 TO: STUP UP AT CONTROL ROOM VIA MH-E05 1 PULL >> SPARE CONTROL	
X-50-510	50E05	2"	1	PULL	ROPE				FR: WIREWAY @ STAND NO. 1 TO: MH-E05 VIA MH-E10 1 PULL >> POWER/CONTROL, SPARE	
X-50-511	50E05	2"	1	PULL	ROPE				FR: WIREWAY @ STAND NO. 1 TO: HH-S10 1 PULL >> SIGNAL, SPARE	
X-50-515	50E05	2"	1	PULL	ROPE				FR: WIREWAY @ STAND NO. 1 TO: WIREWAY @ STAND NO. 2 1 PULL >> POWER/CONTROL, SPARE	

REV	DATE	BY	DESCRIPTION
1	11/2013	IV	ADDENDUM NO.4: CONDUITS SHIFTED DOWN. NO CONDUITS ADDED OR DELETED.

DESIGNED AMS
DRAWN VCP
CHECKED RAM
DATE SEPT 2013

REGISTERED PROFESSIONAL ENGINEER IAN R. VARLEY No. 12879 ELECTRICAL STATE OF CALIFORNIA 9/16/2013

carollo

SAN LUIS OBISPO COUNTY

SAN LUIS OBISPO COUNTY
LOS OSOS WATER RECYCLING FACILITY PROJECT
ELECTRICAL
SLUDGE STORAGE TANKS
CONDUIT SCHEDULE- VIII

VERIFY SCALES
BAR IS ONE INCH ON ORIGINAL DRAWING
0 1"
IF NOT ONE INCH ON THIS SHEET, ADJUST SCALES ACCORDINGLY

JOB NO. 8930A.11
DRAWING NO. 50E13
SHEET NO. 362 OF 549

PROJECT NO. 8930A.11 FILE NAME: 8930A1150E13.dgn

Plot Date: 12-NOV-2013 7:41:05 AM
User: EJohnson
PlotScale: 2:1
DesignScript: Carollo_Std_Pen_v0905.pen
ColorTable: gshade.ctb
Model: Layout1
LAST SAVED BY: ejohnson

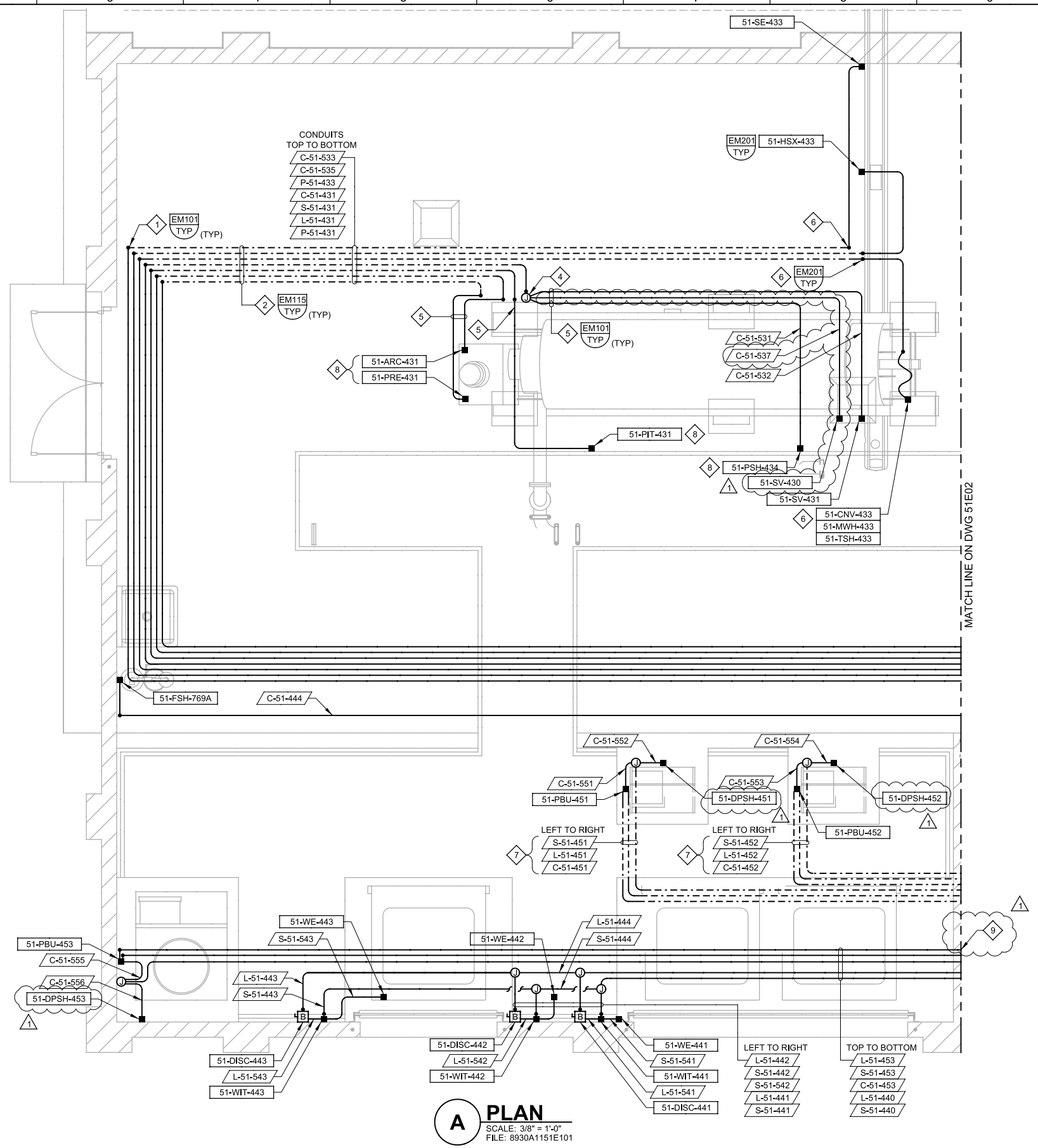

A PLAN

SCALE: 3/8" = 1'-0"
FILE: 8930A1151E101

KEY NOTES:

1. CONDUIT ROUTED ALONG WALL.
2. CONDUITS EMBEDDED IN SLAB.
3. CONDUIT ROUTED ALONG SLAB.
4. STUB UP CONDUITS AT SUPPORT COLUMN OF SCREW COMPRESSOR.
5. CONDUITS ROUTED ALONG FLOOR OR SCREW COMPRESSOR FRAME TO INSTRUMENT.
6. STUB UP CONDUITS AT SUPPORT FRAME OF CONVEYOR. ROUTE CONDUITS ALONG CONVEYOR TO INSTRUMENTS AND DEVICES.
7. REFER TO DRAWING 51E05 & 51E06 FOR CONDUITS UNDERGROUND AND EMBEDDED IN SLAB FOR ELECTRICAL AND CONTROL ROOM.
8. LOCATED ON SKID FURNISHED WITH VENDOR EQUIPMENT.
9. WALL PENETRATION TYPICAL DETAIL EM148. ALL CONDUITS IN WALLS FIRE RATED PENETRATION.

REV	DATE	BY	DESCRIPTION
1	11/2013	IY	ADDENDUM NO. 4

DESIGNED IRV
DRAWN AD
CHECKED RAM
DATE SEPT 2013

REGISTERED PROFESSIONAL ENGINEER — IAN R. VARLEY — No. 12879 — ELECTRICAL — STATE OF CALIFORNIA — 9/16/2013

carollo

SAN LUIS OBISPO COUNTY

SAN LUIS OBISPO COUNTY
LOS OSOS WATER RECYCLING FACILITY PROJECT
ELECTRICAL
DEWATERING BUILDING
POWER AND CONTROL PLAN

VERIFY SCALES
BAR IS ONE INCH ON ORIGINAL DRAWING
0 — 1"
IF NOT ONE INCH ON THIS SHEET, ADJUST SCALES ACCORDINGLY

JOB NO. 8930A.11
DRAWING NO. 51E01
SHEET NO. 363 OF 549

PROJECT NO. 8930A.11 FILE NAME: 8930A1151E01.dgn

LAST SAVED BY: sfunckes
Model: Layout1 ColorTable: gshade.ctb DesignScript: Carollo_Std_Pen_v0905.pen PlotScale: 2:1
User: SFunckes Plot Date: 07-NOV-2013 10:23:12 AM

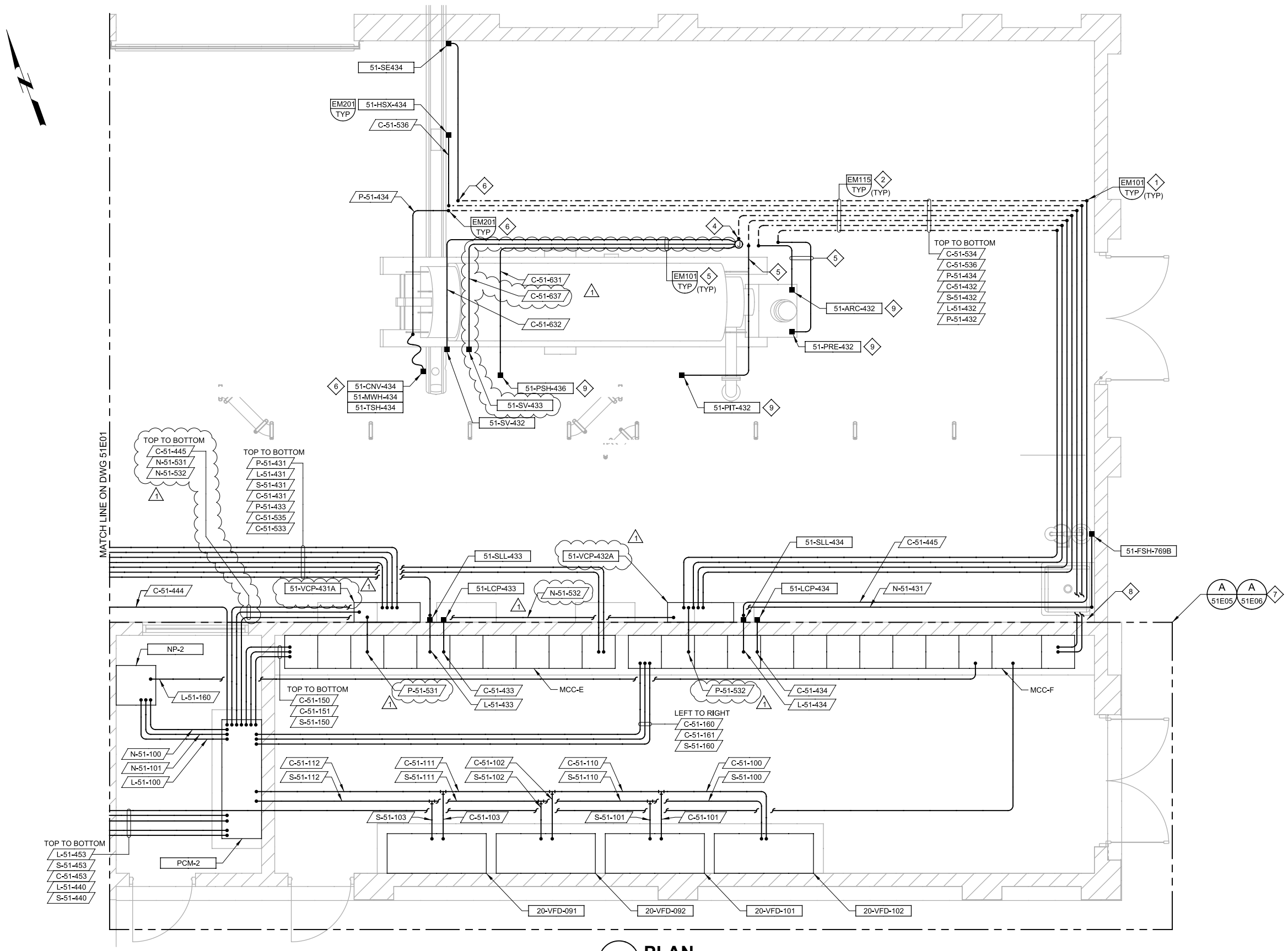

A PLAN

SCALE: 3/8" = 1'-0"
FILE: 8930A1151E101

KEY NOTES:

1. CONDUIT ROUTED ALONG WALL.
2. CONDUIT EMBEDDED IN SLAB.
3. CONDUIT ROUTED ALONG SLAB.
4. CONDUITS ROUTED ALONG FLOOR OR SCREW COMPRESSOR FRAME TO INSTRUMENT.
5. STUB UP CONDUITS AT SUPPORT COLUMN OF SCREW COMPRESSOR.
6. STUB UP CONDUITS AT SUPPORT FRAME OF CONVEYOR. ROUTE CONDUITS ALONG CONVEYOR TO INSTRUMENTS.
7. FOR CONDUITS EMBEDDED IN SLAB FOR ELECTRICAL AND CONTROL ROOM.
8. WALL PENETRATION TYPICAL DETAIL EM148. ALL CONDUIT IN WALLS FIRE RATED PENETRATION.
9. LOCATED ON SKID FURNISHED WITH VENDOR EQUIPMENT.

REV	DATE	BY	DESCRIPTION
1	11/2013	IY	ADDENDUM NO. 4

DESIGNED IRV
DRAWN AD
CHECKED RAM
DATE SEPT 2013

REGISTERED PROFESSIONAL ENGINEER IAN A. VARLEY No. 12879 ELECTRICAL STATE OF CALIFORNIA 9/16/2013

carollo

SAN LUIS OBISPO COUNTY

SAN LUIS OBISPO COUNTY
LOS OSOS WATER RECYCLING FACILITY PROJECT
ELECTRICAL
DEWATERING BUILDING
POWER AND CONTROL PLAN

VERIFY SCALES
BAR IS ONE INCH ON ORIGINAL DRAWING
0 1"
IF NOT ONE INCH ON THIS SHEET, ADJUST SCALES ACCORDINGLY

JOB NO. 8930A.11
DRAWING NO. 51E02
SHEET NO. 364 OF 549

PROJECT NO. 8930A.11 FILE NAME: 8930A1151E02.dgn

LAST SAVED BY: sfunckes
Model: Layout1 ColorTable: gshade.ctb DesignScript: Carollo_Std_Pen_v0905.pen PlotScale: 2:1
Plot Date: 07-NOV-2013 10:28:56 AM
User: SFunckes

Plot Date: 08-NOV-2013 1:32:49 PM
User: SFunckes
PlotScale: 2:1
DesignScript: Carollo_Std_Pen_v0905.pen
ColorTable: gshade.ctb
Model: Layout1
LAST SAVED BY: sfunckes

GENERAL NOTES:

1. FOR STRUCTURAL GENERAL NOTES AND EARTHWORK DETAILS SEE DRAWING 00G10 & 00G11.

KEY NOTES:

1. CONNECT TO JUNCTION MONORAIL HOIST AT EL 15' (AFF) APPROXIMATE.
2. FURNISHED WITH EQUIPMENT.
3. WALL PENETRATION TYPICAL DETAIL EM148. ALL CONDUIT IN WALLS FIRE RATED PENETRATION.
4. CONTINUED ON 51E06.

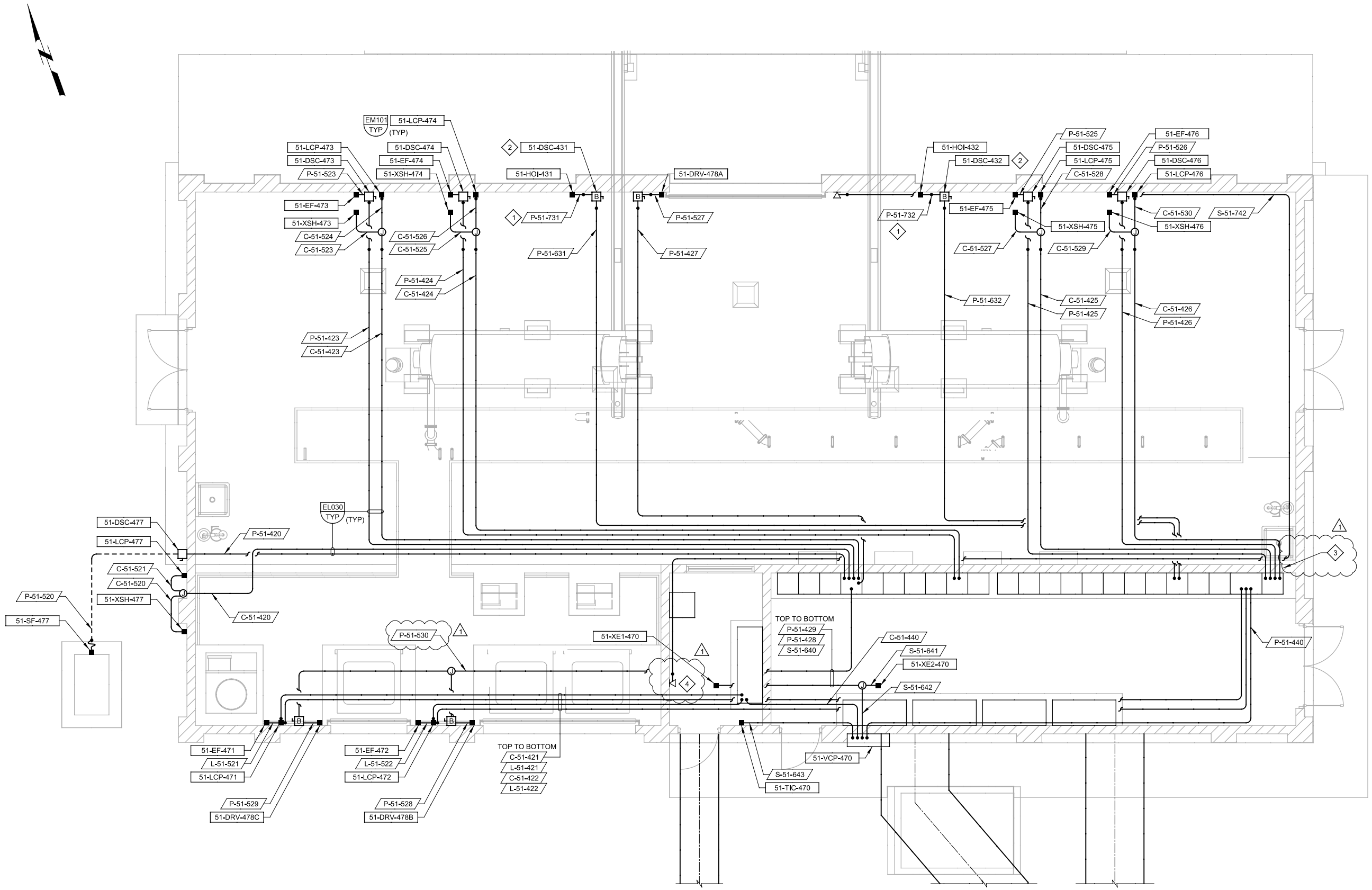

A PLAN

SCALE: 1/4" = 1'-0"
FILE: 8930A1151E102

REV	DATE	BY	DESCRIPTION
1	11/2013	IY	ADDENDUM NO. 4

DESIGNED IRV
DRAWN AD
CHECKED RAM
DATE SEPT 2013

REGISTERED PROFESSIONAL ENGINEER — IAN R. VARLEY — No. 12879 — ELECTRICAL — STATE OF CALIFORNIA — 9/16/2013

carollo®

SAN LUIS OBISPO COUNTY

SAN LUIS OBISPO COUNTY
LOS OSOS WATER RECYCLING FACILITY PROJECT
ELECTRICAL
DEWATERING BUILDING
HVAC POWER & CONTROL PLAN

VERIFY SCALES
BAR IS ONE INCH ON ORIGINAL DRAWING
0 1"
IF NOT ONE INCH ON THIS SHEET, ADJUST SCALES ACCORDINGLY

JOB NO. 8930A.11
DRAWING NO. 51E03
SHEET NO. 365 OF 549

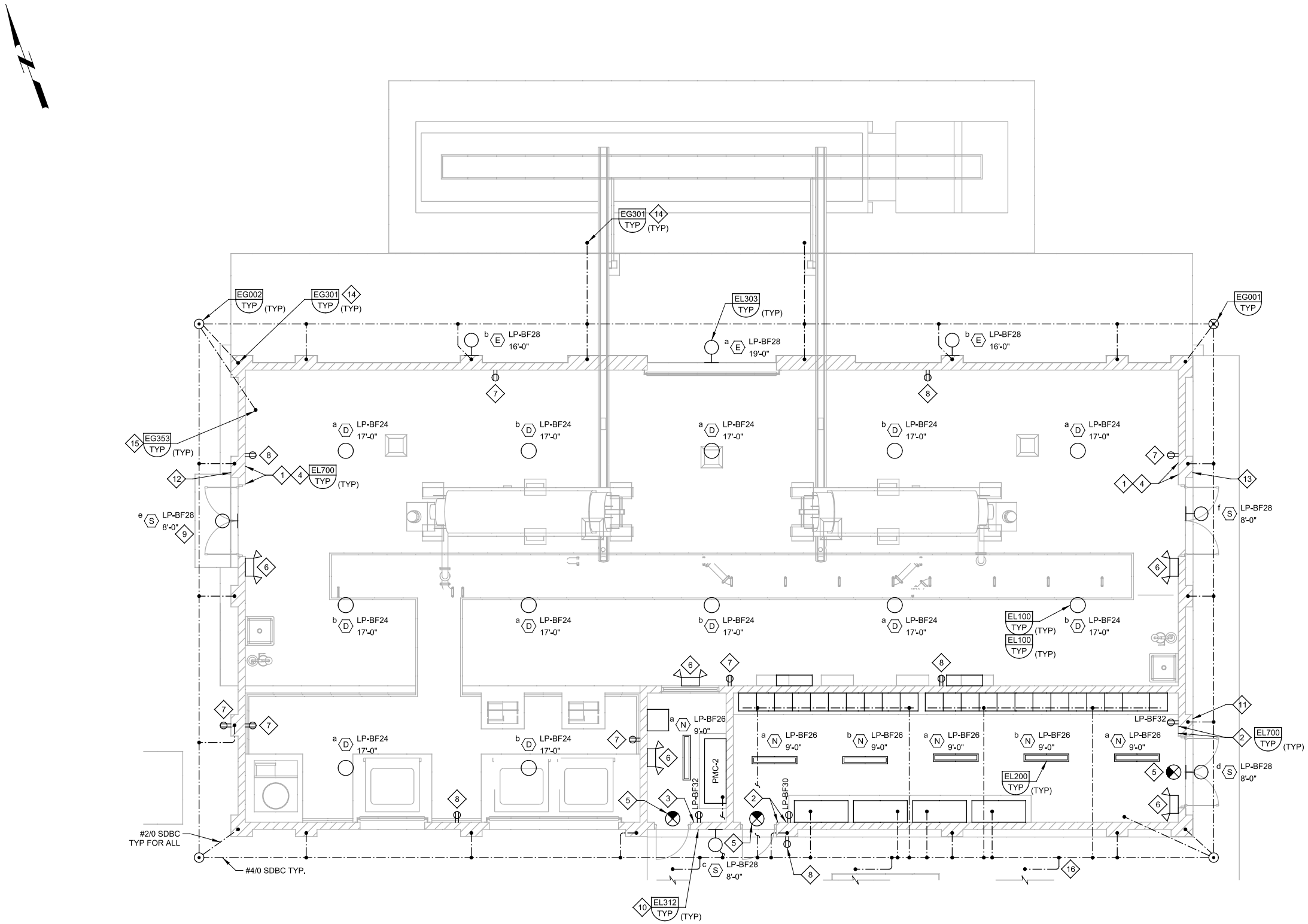

A PLAN
SCALE: 3/16" = 1'-0"
FILE: 8930A1151E101

GENERAL NOTES:

1. FOR STRUCTURAL GENERAL NOTES AND EARTHWORK DETAILS SEE DRAWINGS 00G10 & 00G11.
2. WALL PENETRATION TYPICAL DETAIL EM148. ALL CONDUITS IN WALLS FIRE RATED PENETRATION.

KEY NOTES:

1. a S LP-BF24 3 b S LP-BF24 3
2. a S LP-BF26 3 b S LP-BF26 3
3. a S LP-BF26
4. a S LP-BF28 3 b S LP-BF28 3
5. G LP-BF41 8'-0"
6. F LP-BF41 8'-0"
7. DUPLEX RECEPTACLE WP, GFCI LPBF-32
8. DUPLEX RECEPTACLE WP, GFCI LPBF-30
9. REFERENCE DRAWING 06AE06 FOR FIXTURE TYPE.
10. c S LP-BF28
11. d S LP-BF28
12. e S LP-BF28
13. f S LP-BF28
14. #2 BARE COPPER.
15. BOND #4/0 BARE COPPER TO FOUNDATION REBAR.
16. EXTEND AND BOND DUCT BANK GROUNDS TO GROUND GRID PER TYPICAL DETAIL EG101.

REV	DATE	BY	DESCRIPTION
1	11/2013	IY	ADDENDUM NO. 4

DESIGNED IRV
DRAWN AD
CHECKED RAM
DATE SEPT 2013

REGISTERED PROFESSIONAL ENGINEER IAN R. VARLEY No. 12679 ELECTRICAL STATE OF CALIFORNIA 9/16/2013

carollo®

SAN LUIS OBISPO COUNTY

SAN LUIS OBISPO COUNTY
LOS OSOS WATER RECYCLING FACILITY PROJECT
ELECTRICAL
DEWATERING BUILDING
LIGHTING, RECEPTACLE, & GROUNDING PLAN

VERIFY SCALES
BAR IS ONE INCH ON ORIGINAL DRAWING
0 1"
IF NOT ONE INCH ON THIS SHEET, ADJUST SCALES ACCORDINGLY

JOB NO. 8930A.11
DRAWING NO. 51E04
SHEET NO. 366 OF 549

PROJECT NO. 8930A.11 FILE NAME: 8930A1151E04.dgn

LAST SAVED BY: ejohnson Model: Layout1 ColorTable: gshade.ctb DesignScript: Carollo_Std_Pen_v0905.pen PlotScale: 2:1 User: SFunckes Plot Date: 07-NOV-2013 10:46:53 AM

KEY NOTES:

1. CAP THE CONDUIT PER DETAIL EM105/TYP.
2. REFER TO DRAWING ESC03 FOR CONTINUATION.
3. FOR CLARITY PURPOSE NOT ALL CONDUITS ARE SHOWN.

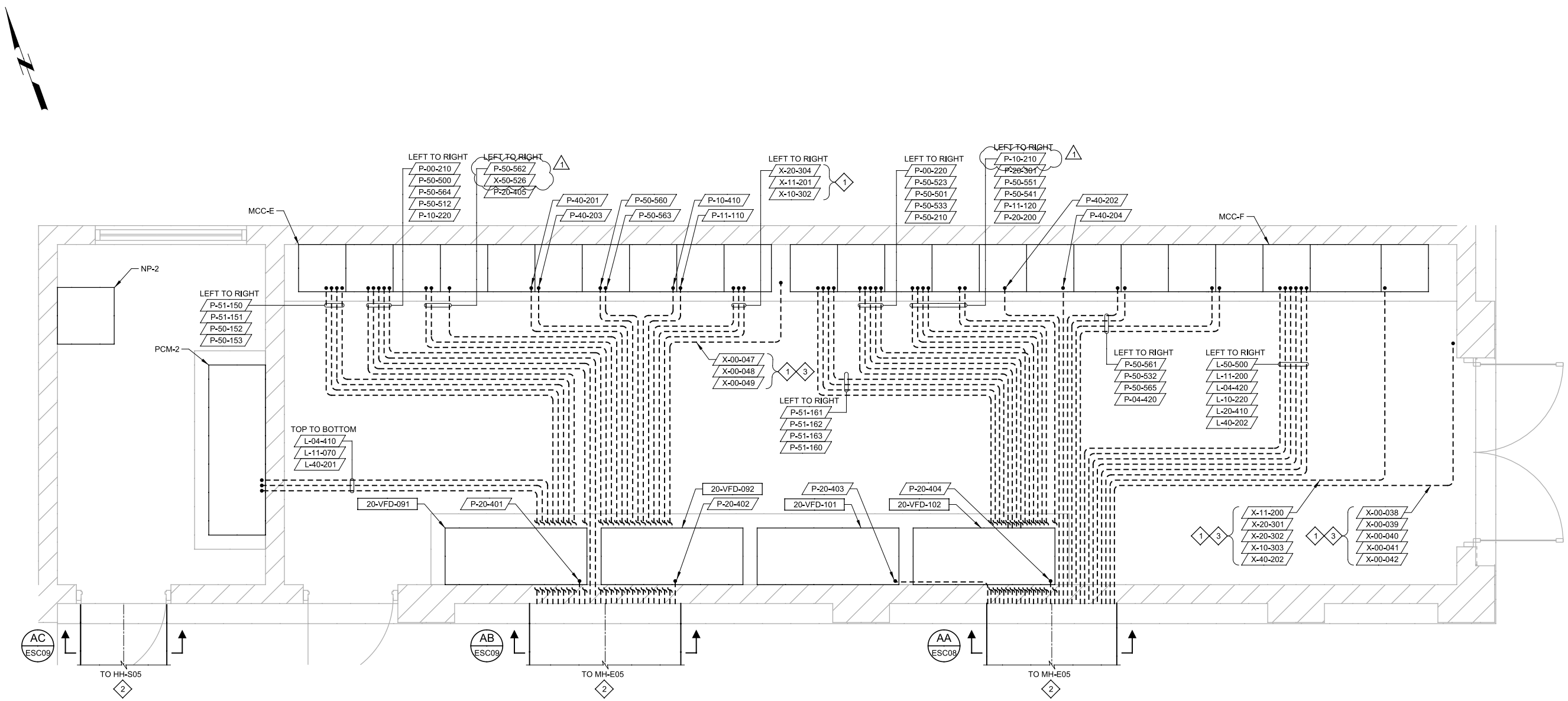

A PLAN

SCALE: 1/2"=1'-0"
FILE: 8930A110E104

REV	DATE	BY	DESCRIPTION
1	11/2013	IY	ADDENDUM NO. 4

DESIGNED AMS
DRAWN VCP
CHECKED RAM
DATE SEPT 2013

REGISTERED PROFESSIONAL ENGINEER IAN R. VARLEY No. 12879 ELECTRICAL STATE OF CALIFORNIA 9/16/2013

carollo

SAN LUIS OBISPO COUNTY

SAN LUIS OBISPO COUNTY
LOS OSOS WATER RECYCLING FACILITY PROJECT
ELECTRICAL
DEWATERING FACILITY ELECTRICAL ROOM-UNDERGROUND POWER PLAN

VERIFY SCALES
BAR IS ONE INCH ON ORIGINAL DRAWING
0 1"
IF NOT ONE INCH ON THIS SHEET, ADJUST SCALES ACCORDINGLY

JOB NO. 8930A.11
DRAWING NO. 51E05
SHEET NO. 367 OF 549

PROJECT NO. 8930A.11 FILE NAME: 8930A1151E05.dgn

Plot Date: 08-NOV-2013 6:43:47 AM User: SFunckes PlotScale: 2:1 DesignScript: Carollo_Std_Pen_v0905.pen ColorTable: gshade.ctb Model: Layout1 LAST SAVED BY: sfunckes

KEY NOTES:

1. CAP THE CONDUIT PER DETAIL EM105/TYP.
2. REFER TO DRAWING ESC03 FOR CONTINUATION.
3. FOR CLARITY PURPOSE NOT ALL CONDUITS ARE SHOWN.
4. CONTINUED ON 51E03.

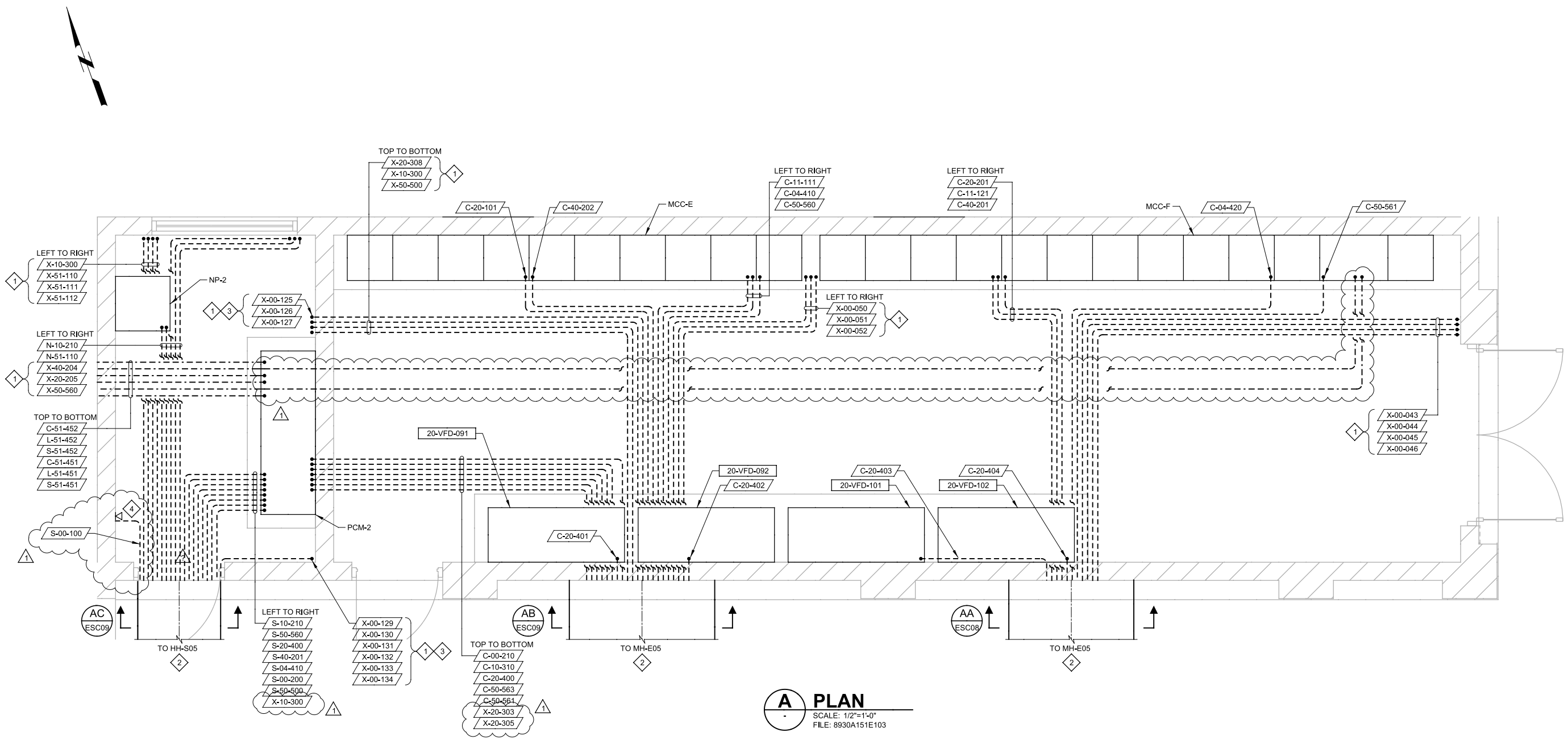

A PLAN

SCALE: 1/2"=1'-0"
FILE: 8930A151E103

REV	DATE	BY	DESCRIPTION
1	11/2013	IY	ADDENDUM NO. 4

DESIGNED AMS
DRAWN VCP
CHECKED RAM
DATE SEPT 2013

REGISTERED PROFESSIONAL ENGINEER IAN R. VARLEY No. 12879 ELECTRICAL STATE OF CALIFORNIA 9/16/2013

carollo

SAN LUIS OBISPO COUNTY

SAN LUIS OBISPO COUNTY

LOS OSOS WATER RECYCLING FACILITY PROJECT

ELECTRICAL

DEWATERING FACILITY ELECTRICAL ROOM-UNDERGROUND CONTROL & SIGNAL PLAN

VERIFY SCALES
BAR IS ONE INCH ON ORIGINAL DRAWING
0 1"
IF NOT ONE INCH ON THIS SHEET, ADJUST SCALES ACCORDINGLY

JOB NO. 8930A.11
DRAWING NO. 51E06
SHEET NO. 368 OF 549

PROJECT NO. 8930A.11 FILE NAME: 8930A1151E06.dgn

Plot Date: 08-NOV-2013 1:36:05 PM User: SFunckes PlotScale: 2:1 DesignScript: Carollo_Std_Pen_v0905.pen ColorTable: gshade.ctb Model: Layout1 LAST SAVED BY: sfunckes

CONDUIT SCHEDULE AREA 51

11/7/13

LOS OSOS WATER RECYCLING FACILITY

DEWATERING BUILDING

CONDUIT			CONDUCTORS			GROUND				
NUMBER	DWG	SIZE	#	SIZE	TYPE	#	SIZE	TYPE	DESCRIPTION	CONNECTING SEGMENTS
C-51-100	51E02	1"	14	#14	XHHW-2	1	#14	XHHW-2	FR: 20-VFD-102	C-51-110
									TO: CONDUIT TEE	
									14 #14 >> CONTROL: 20-VFD-102, 5-SPARE	
C-51-101	51E02	1"	14	#14	XHHW-2	1	#14	XHHW-2	FR: 20-VFD-101	C-51-110
									TO: CONDUIT TEE	
									14 #14 >> CONTROL: 20-VFD-101, 5-SPARE	
C-51-102	51E02	1"	14	#14	XHHW-2	1	#14	XHHW-2	FR: 20-VFD-092	C-51-111
									TO: CONDUIT TEE	
									14 #14 >> CONTROL: 20-VFD-092, 5-SPARE	
C-51-103	51E02	1"	14	#14	XHHW-2	1	#14	XHHW-2	FR: 20-VFD-091	C-51-112
									TO: CONDUIT TEE	
									14 #14 >> CONTROL: 20-VFD-091, 5-SPARE	
C-51-110	51E02	1.5"	28	#14	XHHW-2	1	#14	XHHW-2	FR: CONDUIT TEE	C-51-111
									TO: CONDUIT TEE	
									14 #14 >> CONTROL: 20-VFD-102, 5-SPARE	C-51-100
									14 #14 >> CONTROL: 20-VFD-101, 5-SPARE	C-51-101
C-51-111	51E02	1.5"	42	#14	XHHW-2	1	#14	XHHW-2	FR: CONDUIT TEE	C-51-112
									TO: CONDUIT TEE	
									14 #14 >> CONTROL: 20-VFD-092, 5-SPARE	C-51-102
									14 #14 >> CONTROL: 20-VFD-102, 5-SPARE	C-51-110
									14 #14 >> CONTROL: 20-VFD-101, 5-SPARE	C-51-110
C-51-112	51E02	1.5"	56	#14	XHHW-2	1	#14	XHHW-2	FR: CONDUIT TEE	
									TO: PCM-2	
									14 #14 >> CONTROL: 20-VFD-091, 5-SPARE	C-51-103
									14 #14 >> CONTROL: 20-VFD-092, 5-SPARE	C-51-111
									14 #14 >> CONTROL: 20-VFD-102, 5-SPARE	C-51-111
									14 #14 >> CONTROL: 20-VFD-101, 5-SPARE	C-51-111
C-51-150	51E02	2"	90	#14	XHHW-2	1	#14	XHHW-2	FR: MCC-E	
									TO: PCM-2	
									10 #14 >> CONTROL: 51-CNV-433, 2-SPARE	
									14 #14 >> CONTROL: 04-PMP-601, 5-SPARE	
									14 #14 >> CONTROL: 40-PMP-301, 7-SPARE	
									14 #14 >> CONTROL: 40-PMP-303, 7-SPARE	
									10 #14 >> CONTROL: 11-FAN-071, 3-SPARE	
									14 #14 >> CONTROL: 20-MIX-090, 5-SPARE	
									14 #14 >> CONTROL: 04-PMP-501, 5-SPARE	
C-51-151	51E02	2"	76	#14	XHHW-2	1	#14	XHHW-2	FR: MCC-E	
									TO: PCM-2	
									16 #14 >> CONTROL: 50-BLO-401, 6-SPARE	
									16 #14 >> CONTROL: 50-PMP-121, 6-SPARE	
									8 #14 >> CONTROL: 51-EF-473, 4-SPARE	
									8 #14 >> CONTROL: 51-EF-474, 4-SPARE	
									10 #14 >> CONTROL: 51-SF-477, 2-SPARE	
									18 #14 >> CONTROL: 50-PMP-423, 7-SPARE	
C-51-160	51E02	2"	90	#14	XHHW-2	1	#14	XHHW-2	FR: MCC-F	
									TO: PCM-2	
									10 #14 >> CONTROL: 51-CNV-434, 2-SPARE	
									14 #14 >> CONTROL: 04-PMP-602, 5-SPARE	
									14 #14 >> CONTROL: 40-PMP-302, 2-SPARE	
									14 #14 >> CONTROL: 40-PMP-304, 7-SPARE	
									10 #14 >> CONTROL: 11-FAN-072, 3-SPARE	
									14 #14 >> CONTROL: 20-MIX-100, 5-SPARE	
									14 #14 >> CONTROL: 04-PMP-502, 5-SPARE	
C-51-161	51E02	2.5"	98	#14	XHHW-2	1	#14	XHHW-2	FR: MCC-F	
									TO: PCM-2	
									16 #14 >> CONTROL: 50-BLO-402, 6-SPARE	
									16 #14 >> CONTROL: 50-BLO-403, 6-SPARE	
									16 #14 >> CONTROL: 50-PMP-122, 6-SPARE	
									16 #14 >> CONTROL: 50-PMP-123, 6-SPARE	
									8 #14 >> CONTROL: 51-EF-475, 2-SPARE	
									8 #14 >> CONTROL: 51-EF-476, 2-SPARE	
									18 #14 >> CONTROL: 50-PMP-427, 7-SPARE	
C-51-420	51E03	0.75"	10	#14	XHHW-2	1	#14	XHHW-2	FR: JUNCTION BOX	
									TO: MCC-E	
									4 #14 >> CONTROL: 51-XSH-477	C-51-520
									6 #14 >> CONTROL: 51-LCP-477	C-51-521
C-51-421	51E03	0.75"	2	#14	XHHW-2	1	#14	XHHW-2	FR: 51-LCP-471	
									TO: PCM-2	
									2 #14 >> CONTROL:-51-LCP-471	

CONDUIT SCHEDULE AREA 51

11/7/13

LOS OSOS WATER RECYCLING FACILITY

DEWATERING BUILDING

CONDUIT			CONDUCTORS			GROUND				
NUMBER	DWG	SIZE	#	SIZE	TYPE	#	SIZE	TYPE	DESCRIPTION	CONNECTING SEGMENTS
C-51-422	51E03	0.75"	2	#14	XHHW-2	1	#14	XHHW-2	FR: 51-LCP-472	
									TO: LP-BF AT MCC-F	
									2 #14 >> CONTROL:-51-LCP-472	
C-51-423	51E03	0.75"	6	#14	XHHW-2	1	#14	XHHW-2	FR: JUNCTION BOX	
									TO: MCC-E	
									4 #14 >> CONTROL: 51-XSH-473	C-51-523
									2 #14 >> CONTROL: 51-LCP-473	C-51-524
C-51-424	51E03	0.75"	6	#14	XHHW-2	1	#14	XHHW-2	FR: JUNCTION BOX	
									TO: MCC-E	
									4 #14 >> CONTROL: 51-XSH-474	C-51-525
									2 #14 >> CONTROL: 51-LCP-474	C-51-526
C-51-425	51E03	0.75"	6	#14	XHHW-2	1	#14	XHHW-2	FR: JUNCTION BOX	
									TO: MCC-F	
									4 #14 >> CONTROL: 51-XSH-475	C-51-527
									2 #14 >> CONTROL: 51-LCP-475	C-51-528
C-51-426	51E03	0.75"	6	#14	XHHW-2	1	#14	XHHW-2	FR: JUNCTION BOX	
									TO: MCC-F	
									4 #14 >> CONTROL: 51-XSH-476	C-51-529
									2 #14 >> CONTROL: 51-LCP-476	C-51-530
C-51-431	51E02	1"	6	#14	XHHW-2	1	#14	XHHW-2	FR: SCREW COMPRESSOR #31 CONTROL JB	
	51E01								TO: 51-VCP-431	
									2 #14 >> CONTROL: 51-PSH-434	C-51-531
									2 #14 >> CONTROL:51-SV-431	C-51-532
									2 #14 >> CONTROL: 51-SV-430	C-51-537
C-51-432	51E02	1"	6	#14	XHHW-2	1	#14	XHHW-2	FR: SCREW COMPRESSOR #32 CONTROL JB	
									TO: 51-VCP-432	
									2 #14 >> CONTROL: 51-PSH-436	C-51-631
									2 #14 >> CONTROL:51-SV-432	C-51-632
									2 #14 >> CONTROL: 51-SV-433	C-51-637
C-51-433	51E02	0.75"	10	#14	XHHW-2	1	#14	XHHW-2	FR: 51-LCP-433	
									TO: MCC-E	
									10 #14 >> CONTROL:- 51-CNV-433 4 SPARE	
C-51-434	51E02	0.75"	10	#14	XHHW-2	1	#14	XHHW-2	FR: 51-LCP434	
									TO: MCC-F	
									10 #14 >> CONTROL:- 51-CNV-434 4 SPARE	
C-51-440	51E03	0.75"	10	#14	XHHW-2	1	#14	XHHW-2	FR: 51-VCP-440	
									TO: PCM-2	
									10 #14 >> CONTROL: 51-VCP-440	
C-51-444	51E01	0.75"	2	#14	XHHW-2	1	#14	XHHW-2	FR: 51-FSH-769A	
	51E02								TO: PCM-2	
									2 #14 >> CONTROL: 51-FSH-769A	
C-51-445	51E02	0.75"	2	#14	XHHW-2	1	#14	XHHW-2	FR: 51-FSH-769B	
									TO: PCM-2	
									2 #14 >> CONTROL: 51-FSH-769B	
C-51-451	51E01	1"	14	#14	XHHW-2	1	#14	XHHW-2	FR: JUNCTION BOX	
	51E06								TO: PCM-2	
									2 #14 >> CONTROL: 51-PBU-451	C-51-552
									12 #14 >> CONTROL: 51-PBU-451	C-51-551
C-51-452	51E01	1"	14	#14	XHHW-2	1	#14	XHHW-2	FR: JUNCTION BOX	
	51E06								TO: PCM-2	
									2 #14 >> CONTROL: 51-PBU-452	C-51-554
									12 #14 >> CONTROL: 51-PBU-452	C-51-553
C-51-453	51E01	1"	14	#14	XHHW-2	1	#14	XHHW-2	FR: JUNCTION BOX	
	51E02								TO: PCM-2	
									12 #14 >> CONTROL: 51-PBU-453	C-51-555
									2 #14 >> CONTROL: 51-PBU-453	C-51-556
C-51-520	51E03	0.75"	4	#14	XHHW-2	1	#14	XHHW-2	FR: 51-XSH-477	C-51-420
									TO: JUNCTION BOX	
									4 #14 >> CONTROL: 51-XSH-477	

1

GENERAL NOTES:

CONDUIT IDENTIFICATION
V-YY-ZZZ
LEGEND:
V → M= MEDIUM VOLTAGE POWER
P= 480V OR 277V POWER
L=120V, 208, OR 240 POWER
C=DISCRETE CONTROL (120VAC)
S= SIGNAL (4-20MA)
N= NETWORK
X=SPARE
YY → FACILITY INDEX
ZZZ→ A UNIQUE NUMBER

REV	DATE	BY	DESCRIPTION
1	11/2013	IY	ADDENDUM NO. 4

DESIGNED AMS
DRAWN VCP
CHECKED RAM
DATE SEPT 2013

REGISTERED PROFESSIONAL ENGINEER IAN R. VARLEY No. 12879 ELECTRICAL STATE OF CALIFORNIA 9/16/2013

carollo

SAN LUIS OBISPO COUNTY

SAN LUIS OBISPO COUNTY
LOS OSOS WATER RECYCLING FACILITY PROJECT
ELECTRICAL
DEWATERING BUILDING
CONDUIT SCHEDULE- I

VERIFY SCALES
BAR IS ONE INCH ON ORIGINAL DRAWING
0 1"
IF NOT ONE INCH ON THIS SHEET, ADJUST SCALES ACCORDINGLY

JOB NO. 8930A.11
DRAWING NO. 51E07
SHEET NO. 369 OF 549

Plot Date: 07-NOV-2013 1:53:05 PM
User: SFunckes
PlotScale: 2:1
DesignScript: Carollo_Std_Pen_v0905.pen
ColorTable: gshade.ctb
Model: Layout1
LAST SAVED BY: ejohnson
PROJECT NO. 8930A.11 FILE NAME: 8930A1151E07.dgn

CONDUIT SCHEDULE AREA 51

11/7/13

LOS OSOS WATER RECYCLING FACILITY

DEWATERING BUILDING

CONDUIT			CONDUCTORS			GROUND				
NUMBER	DWG	SIZE	#	SIZE	TYPE	#	SIZE	TYPE	DESCRIPTION	CONNECTING SEGMENTS
C-51-521	51E03	0.75"	6	#14	XHHW-2	1	#14	XHHW-2	FR: 51-LCP-477 TO: JUNCTION BOX 6 #14 >> CONTROL: 51-LCP-477	C-51-420
C-51-523	51E03	0.75"	4	#14	XHHW-2	1	#14	XHHW-2	FR: 51-XSH-473 TO: JUNCTION BOX 4 #14 >> CONTROL: 51-XSH-473	C-51-423
C-51-524	51E03	0.75"	2	#14	XHHW-2	1	#14	XHHW-2	FR: 51-LCP-473 TO: JUNCTION BOX 2 #14 >> CONTROL: 51-LCP-473	C-51-423
C-51-525	51E03	0.75"	4	#14	XHHW-2	1	#14	XHHW-2	FR: 51-XSH-474 TO: JUNCTION BOX 4 #14 >> CONTROL: 51-XSH-474	C-51-424
C-51-526	51E03	0.75"	2	#14	XHHW-2	1	#14	XHHW-2	FR: 51-LCP-474 TO: JUNCTION BOX 2 #14 >> CONTROL: 51-LCP-474	C-51-424
C-51-527	51E03	0.75"	4	#14	XHHW-2	1	#14	XHHW-2	FR: 51-XSH-475 TO: JUNCTION BOX 4 #14 >> CONTROL: 51-XSH-475	C-51-425
C-51-528	51E03	0.75"	2	#14	XHHW-2	1	#14	XHHW-2	FR: 51-LCP-475 TO: JUNCTION BOX 2 #14 >> CONTROL: 51-LCP-475	C-51-425
C-51-529	51E03	0.75"	4	#14	XHHW-2	1	#14	XHHW-2	FR: 51-XSH-476 TO: JUNCTION BOX 4 #14 >> CONTROL: 51-XSH-476	C-51-426
C-51-530	51E03	0.75"	2	#14	XHHW-2	1	#14	XHHW-2	FR: 51-LCP-426 TO: JUNCTION BOX 2 #14 >> CONTROL: 51-LCP-476	C-51-426
C-51-531	51E01	0.75"	2	#14	XHHW-2	1	#14	XHHW-2	FR: 51-PSH-434 TO: SCREW COMPRESSOR #31 CONTROL JB 2 #14 >> CONTROL: 51-PSH-434	C-51-431
C-51-532	51E01	0.75"	2	#14	XHHW-2	1	#14	XHHW-2	FR: 51-SV-431 TO: SCREW COMPRESSOR #31 CONTROL JB 2 #14 >> CONTROL:51-SV-431	C-51-431
C-51-533	51E01	1"	1	MFR	CABLE	1	#14	XHHW-2	FR: 51-SE-433 TO: 51-SSL-433 1 MFR >> VENDOR CABLE TO ELEMENT	
C-51-534	51E02	1"	1	MFR	CABLE	1	#14	XHHW-2	FR: 51-SE-434 TO: 51-SSL-434 1 MFR >> VENDOR CABLE TO ELEMENT	
C-51-535	51E01	1"	4	#14	XHHW-2	1	#14	XHHW-2	FR: 51-HSX-433 TO: MCC-E 4 #14 >> CONTROL: 51-HSX-433	
C-51-536	51E02	1"	4	#14	XHHW-2	1	#14	XHHW-2	FR: 51-HSX-434 TO: MCC-F 4 #14 >> CONTROL: 51-HSX-434	
C-51-537	51E01	0.75"	2	#14	XHHW-2	1	#14	XHHW-2	FR: 51-SV-430 TO: SCREW COMPRESSOR #31 CONTROL JB 2 #14 >> CONTROL: 51-SV-430	C-51-431
C-51-551	51E01	0.75"	12	#14	XHHW-2	1	#14	XHHW-2	FR: 51-PBU-451 TO: JUNCTION BOX 12 #14 >> CONTROL: 51-PBU-451	C-51-451
C-51-552	51E01	0.75"	2	#14	XHHW-2	1	#14	XHHW-2	FR: 51-PSH-451B TO: JUNCTION BOX 2 #14 >> CONTROL: 51-PBU-451	C-51-451
C-51-553	51E01	0.75"	12	#14	XHHW-2	1	#14	XHHW-2	FR: 51-PBU-452 TO: JUNCTION BOX 12 #14 >> CONTROL: 51-PBU-452	C-51-452
C-51-554	51E01	0.75"	2	#14	XHHW-2	1	#14	XHHW-2	FR: 51-PSH-452B TO: JUNCTION BOX 2 #14 >> CONTROL: 51-PBU-452	C-51-452
C-51-555	51E01	0.75"	12	#14	XHHW-2	1	#14	XHHW-2	FR: 51-PBU-453 TO: JUNCTION BOX 12 #14 >> CONTROL: 51-PBU-453	C-51-453

CONDUIT SCHEDULE AREA 51

11/7/13

LOS OSOS WATER RECYCLING FACILITY

DEWATERING BUILDING

CONDUIT			CONDUCTORS			GROUND				
NUMBER	DWG	SIZE	#	SIZE	TYPE	#	SIZE	TYPE	DESCRIPTION	CONNECTING SEGMENTS
C-51-556	51E01	0.75"	2	#14	XHHW-2	1	#14	XHHW-2	FR: 51-PSH-453 TO: JUNCTION BOX 2 #14 >> CONTROL: 51-PBU-453	C-51-453
C-51-631	51E02	0.75"	2	#14	XHHW-2	1	#14	XHHW-2	FR: 51-PSH-436 TO: SCREW COMPRESSOR #32 CONTROL JB 2 #14 >> CONTROL: 51-PSH-436	C-51-432
C-51-632	51E02	0.75"	2	#14	XHHW-2	1	#14	XHHW-2	FR: 51-SV-432 TO: SCREW COMPRESSOR #32 CONTROL JB 2 #14 >> CONTROL:51-SV-432	C-51-432
C-51-637	51E02	0.75"	2	#14	XHHW-2	1	#14	XHHW-2	FR: 51-SV-433 TO: SCREW COMPRESSOR #32 CONTROL JB 2 #14 >> CONTROL: 51-SV-433	C-51-432
L-51-100	51E02	0.75"	2	#10	XHHW-2	1	#10	XHHW-2	FR: PCM-2 TO: NP-2 2 #10 >> POWER: PCM-2	
L-51-160	51E02	0.75"	2	#8	XHHW-2	1	#10	XHHW-2	FR: NP-2 TO: MCC-F 2 #8 >> POWER: NP-2(LPBF)	
L-51-421	51E03	0.75"	2	#12	XHHW-2	1	#12	XHHW-2	FR: 51-LCP-421 TO: LP-BF AT MCC-F 2 #12 >> POWER: 51-LCP-421	
L-51-422	51E03	0.75"	2	#12	XHHW-2	1	#12	XHHW-2	FR: 51-LCP-422 TO: LP-BF AT MCC-F 2 #12 >> POWER: 51-LCP-422	
L-51-431	51E01	1"	3 2	#10 #14	XHHW-2 XHHW-2	1	#10	XHHW-2	FR: 51-ARC-431 TO: 51-VCP-431 3 #10 >> POWER: 51-ARC-431 2 #14 >> CONTROL: 51-ARC-431	
L-51-432	51E02	1"	3 2	#10 #14	XHHW-2 XHHW-2	1	#10	XHHW-2	FR: 51-ARC-431 TO: 51-VCP-431 3 #10 >> POWER: 51-ARC-431 2 #14 >> CONTROL: 51-ARC-431	
L-51-433	51E02	0.75"	2 2	#12 #14	XHHW-2 XHHW-2	1	#12	XHHW-2	FR: 51-SSL-433 TO: MCC-E 2 #12 >> POWER: 51-SSL-433 2 #14 >> CONTROL: 51-SSL-433	
L-51-434	51E02	0.75"	2 2	#12 #14	XHHW-2 XHHW-2	1	#12	XHHW-2	FR: 51-SSL-434 TO: MCC-F 2 #12 >> POWER: 51-SSL-434 2 #14 >> CONTROL: 51-SSL-434	
L-51-440	51E01	0.75"	6	#12	XHHW-2	1	#12	XHHW-2	FR: JUNCTION BOX TO: PCM-2 2 #12 >> POWER: 51-WIT-441 2 #12 >> POWER: 51-WIT-443 2 #12 >> POWER: 51-WIT-442	 L-51-441 L-51-444 L-51-444
L-51-441	51E01	0.75"	2	#12	XHHW-2	1	#12	XHHW-2	FR: DISCONNECT TO: JUNCTION BOX 2 #12 >> POWER: 51-WIT-441	L-51-440 L-51-541
L-51-442	51E01	0.75"	2	#12	XHHW-2	1	#12	XHHW-2	FR: DISCONNECT TO: JUNCTION BOX 2 #12 >> POWER: 51-WIT-442	L-51-444 L-51-542
L-51-443	51E01	0.75"	2	#12	XHHW-2	1	#12	XHHW-2	FR: DISCONNECT TO: JUNCTION BOX 2 #12 >> POWER: 51-WIT-443	L-51-444 L-51-543
L-51-444	51E01	0.75"	4	#12	XHHW-2	1	#12	XHHW-2	FR: JUNCTION BOX TO: JUNCTION BOX 2 #12 >> POWER: 51-WIT-443 2 #12 >> POWER: 51-WIT-442	L-51-440 L-51-443 L-51-442
L-51-451	51E01 51E02	0.75"	2	#10	XHHW-2	1	#10	XHHW-2	FR: 51-PBU-451 TO: LP-BF AT MCC-F 2 #10 >> POWER: 51-PBU-451	

GENERAL NOTES:

CONDUIT IDENTIFICATION
V-YY-ZZZ
LEGEND:
V → M= MEDIUM VOLTAGE POWER
P= 480V OR 277V POWER
L=120V, 208, OR 240 POWER
C=DISCRETE CONTROL (120VAC)
S= SIGNAL (4-20MA)
N= NETWORK
X=SPARE
YY → FACILITY INDEX
ZZZ→ A UNIQUE NUMBER

REV	DATE	BY	DESCRIPTION
1	11/2013	IY	ADDENDUM NO. 4

DESIGNED AMS
DRAWN VCP
CHECKED RAM
DATE SEPT 2013

REGISTERED PROFESSIONAL ENGINEER IAN R. VARLEY No. 12879 ELECTRICAL STATE OF CALIFORNIA 9/16/2013

carollo

SAN LUIS OBISPO COUNTY

SAN LUIS OBISPO COUNTY
LOS OSOS WATER RECYCLING FACILITY PROJECT
ELECTRICAL
DEWATERING BUILDING
CONDUIT SCHEDULE- II

VERIFY SCALES
BAR IS ONE INCH ON ORIGINAL DRAWING
0 1"
IF NOT ONE INCH ON THIS SHEET, ADJUST SCALES ACCORDINGLY

JOB NO. 8930A.11
DRAWING NO. 51E08
SHEET NO. 370 OF 549

Plot Date: 07-NOV-2013 1:58:15 PM
User: SFunckes
PlotScale: 2:1
DesignScript: Carollo_Std_Pen_v0905.pen
ColorTable: gshade.ctb
Model: Layout1
LAST SAVED BY: ejohnson
PROJECT NO. 8930A.11 FILE NAME: 8930A1151E08.dgn

CONDUIT SCHEDULE AREA 51

11/7/13

LOS OSOS WATER RECYCLING FACILITY

DEWATERING BUILDING

CONDUIT			CONDUCTORS			GROUND						
NUMBER	DWG	SIZE	#	SIZE	TYPE	#	SIZE	TYPE	DESCRIPTION			CONNECTING SEGMENTS
L-51-452	51E01 51E02	0.75"	2	#10	XHHW-2	1	#10	XHHW-2	FR: TO:	51-PBU-452 LP-BF AT MCC-F 2 #10	>> POWER: 51-PBU-452	
L-51-453	51E01 51E02	0.75"	2	#10	XHHW-2	1	#10	XHHW-2	FR: TO:	51-PBU-453 LP-BF AT MCC-F 2 #10	>> POWER: 51-PBU-453	
L-51-521	51E03	0.75"	2	#12	XHHW-2	1	#12	XHHW-2	FR: TO:	51-EF-471 51-LCP-471 2 #12	>> POWER: 51-EF-471	
L-51-522	51E03	0.75"	2	#12	XHHW-2	1	#12	XHHW-2	FR: TO:	51-EF-472 51-LCP-472 2 #12	>> POWER: 51-EF-472	
L-51-541	51E01	0.75"	2	#12	XHHW-2	1	#12	XHHW-2	FR: TO:	51-WIT-441 DISCONNECT 2 #12	>> POWER: 51-WIT-441	L-51-441
L-51-542	51E01	0.75"	2	#12	XHHW-2	1	#12	XHHW-2	FR: TO:	51-WIT-442 DISCONNECT 2 #12	>> POWER: 51-WIT-442	L-51-442
L-51-543	51E01	0.75"	2	#12	XHHW-2	1	#12	XHHW-2	FR: TO:	51-WIT-443 DISCONNECT 2 #12	>> POWER: 51-WIT-443	L-51-443
N-51-100	51E07	1.5"	3	2/FO		1	#14	XHHW-2	FR: TO:	NP-2 PCM-2 3 2/FO	>> NETWORK	
N-51-101	51E07	1"	4	CAT6A		1	#14	XHHW-2	FR: TO:	NP-2 PCM-2 4 CAT6A	>> NETWORK	
N-51-110	51E06	1"	1	12/FO		1	#14	XHHW-2	FR: TO:	NP-2 NR-MAIN VIA HH-S05, HH-S12, HH-S04 1 12/FO	>> NETWORK	
N-51-531	51E01	0.75"	1	CAT6A		1	#14	XHHW-2	FR: TO:	51-VCP-431 NP-2 1 CAT6A	>> SIGNAL:51-VCP-431	
N-51-532	51E02	0.75"	1	CAT6A		1	#14	XHHW-2	FR: TO:	51-VCP-432 NP-2 1 CAT6A	>> SIGNAL:51-VCP-432	
P-51-150	51E05 70E02	4"	3	750	XHHW-2	1	#1/0	XHHW-2	FR: TO:	MCC-E SWGR-MS VIA MH-E05,MH-E03, MH-E01 3 750	>> POWER: MCC-E	
P-51-151	51E05 70E02	4"	3	750	XHHW-2	1	#1/0	XHHW-2	FR: TO:	MCC-E SWGR-MS VIA MH-E05,MH-E03, MH-E01 3 750	>> POWER: MCC-E	
P-51-152	51E05 70E02	4"	3	750	XHHW-2	1	#1/0	XHHW-2	FR: TO:	MCC-E SWGR-MS VIA MH-E05,MH-E03, MH-E01 3 750	>> POWER: MCC-E	
P-51-153	51E05 70E02	4"	3	750	XHHW-2	1	#1/0	XHHW-2	FR: TO:	MCC-E SWGR-MS VIA MH-E05,MH-E03, MH-E01 3 750	>> POWER: MCC-E	
P-51-160	51E05 70E02	4"	3	750	XHHW-2	1	#1/0	XHHW-2	FR: TO:	MCC-F SWGR-MS VIA MH-E05,MH-E03, MH-E01 3 750	>> POWER: MCC-F	
P-51-161	51E05 70E02	4"	3	750	XHHW-2	1	#1/0	XHHW-2	FR: TO:	MCC-F SWGR-MS VIA MH-E05,MH-E03, MH-E01 3 750	>> POWER: MCC-F	
P-51-162	51E05 70E02	4"	3	750	XHHW-2	1	#1/0	XHHW-2	FR: TO:	MCC-F SWGR-MS VIA MH-E05,MH-E03, MH-E01 3 750	>> POWER: MCC-F	
P-51-163	51E05 70E02	4"	3	750	XHHW-2	1	#1/0	XHHW-2	FR: TO:	MCC-F SWGR-MS VIA MH-E05,MH-E03, MH-E01 3 750	>> POWER: MCC-F	
P-51-420	51E03	0.75"	6	#12	XHHW-2	1	#12	XHHW-2	FR: TO:	DISCONNECT MCC-E 6 #12	>> POWER: 51-SF-477	P-51-520
P-51-423	51E03	0.75"	3	#12	XHHW-2	1	#12	XHHW-2	FR: TO:	DISCONNECT MCC-E 3 #12	>> POWER: 51-EF-473	P-51-523

CONDUIT SCHEDULE AREA 51

11/7/13

LOS OSOS WATER RECYCLING FACILITY

DEWATERING BUILDING

CONDUIT			CONDUCTORS			GROUND						
NUMBER	DWG	SIZE	#	SIZE	TYPE	#	SIZE	TYPE	DESCRIPTION			CONNECTING SEGMENTS
P-51-424	51E03	0.75"	3	#12	XHHW-2	1	#12	XHHW-2	FR: TO:	DISCONNECT MCC-E 3 #12	>> POWER: 51-EF-474	P-51-524
P-51-425	51E03	0.75"	3	#12	XHHW-2	1	#12	XHHW-2	FR: TO:	DISCONNECT MCC-F 3 #12	>> POWER: 51-EF-475	P-51-525
P-51-426	51E03	0.75"	3	#12	XHHW-2	1	#12	XHHW-2	FR: TO:	DISCONNECT MCC-F 3 #12	>> POWER: 51-EF-476	P-51-526
P-51-427	51E03	0.75"	3	#12	XHHW-2	1	#12	XHHW-2	FR: TO:	DISCONNECT MCC-E 3 #12	>> POWER: 51-DRV-478A	P-51-527
P-51-428	51E03	0.75"	3	#12	XHHW-2	1	#12	XHHW-2	FR: TO:	DISCONNECT MCC-E 3 #12	>> POWER: 51-DRV-478B	P-51-528
P-51-429	51E03	0.75"	3	#12	XHHW-2	1	#12	XHHW-2	FR: TO:	DISCONNECT MCC-E 3 #12	>> POWER: 51-DRV-478C	P-51-529
P-51-431	51E01 51E02	1"	3	#12	XHHW-2	1	#12	XHHW-2	FR: TO:	51-PRE-431 51-VCP-431 3 #12	>> POWER: 51-PRE-431	
P-51-432	51E02	1"	3	#12	XHHW-2	1	#12	XHHW-2	FR: TO:	51-PRE-432 51-VCP-432 3 #12	>> POWER: 51-PRE-432	
P-51-433	51E01 51E02	1"	3 2 2	#10 #12 #14	XHHW-2 XHHW-2 XHHW-2	1	#10	XHHW-2	FR: TO:	51-CNV-433 MCC-E 3 #10 2 #12 2 #14	>> POWER:51-CNV-433 >> POWER:51-MWH-433 >> CONTROL: 51-TSH-433	
P-51-434	51E02	1"	3 2 2	#10 #12 #14	XHHW-2 XHHW-2 XHHW-2	1	#10	XHHW-2	FR: TO:	51-CNV-434 MCC-E 3 #10 2 #12 2 #14	>> POWER:51-CNV-434 >> POWER:51-MWH-434 >> CONTROL: 51-TSH-434	
P-51-440	51E03	0.75"	3	#8	XHHW-2	1	#10	XHHW-2	FR: TO:	51-VCP-470 MCC-F 3 #8	>> POWER: 51-ACU-470	
P-51-520	51E03	0.75"	6	#12	XHHW-2	1	#12	XHHW-2	FR: TO:	51-SF-477 DISCONNECT 6 #12	>> POWER: 51-SF-477	P-51-420
P-51-523	51E03	0.75"	3	#12	XHHW-2	1	#12	XHHW-2	FR: TO:	51-EF-473 DISCONNECT 3 #12	>> POWER: 51-EF-473	P-51-423
P-51-524	51E03	0.75"	3	#12	XHHW-2	1	#12	XHHW-2	FR: TO:	51-EF-474 DISCONNECT 3 #12	>> POWER: 51-EF-474	P-51-424
P-51-525	51E03	0.75"	3	#12	XHHW-2	1	#12	XHHW-2	FR: TO:	51-EF-475 DISCONNECT 3 #12	>> POWER: 51-EF-475	P-51-425
P-51-526	51E03	0.75"	3	#12	XHHW-2	1	#12	XHHW-2	FR: TO:	51-EF-476 DISCONNECT 3 #12	>> POWER: 51-EF-476	P-51-426
P-51-527	51E03	0.75"	3	#12	XHHW-2	1	#12	XHHW-2	FR: TO:	51-DRV-478A DISCONNECT 3 #12	>> POWER: 51-DRV-478A	P-51-427
P-51-528	51E03	0.75"	3	#12	XHHW-2	1	#12	XHHW-2	FR: TO:	51-DRV-478B JUNCTION BOX VIA DISCONNECT 3 #12	>> POWER: 51-DRV-478B	P-51-428
P-51-529	51E03	0.75"	3	#12	XHHW-2	1	#12	XHHW-2	FR: TO:	51-DRV-478C JUNCTION BOX VIA DISCONNECT 3 #12	>> POWER: 51-DRV-478C	P-51-429

1

GENERAL NOTES:

CONDUIT IDENTIFICATION
V-YY-ZZZ
LEGEND:
V → M= MEDIUM VOLTAGE POWER
P= 480V OR 277V POWER
L=120V, 208, OR 240 POWER
C=DISCRETE CONTROL (120VAC)
S= SIGNAL (4-20MA)
N= NETWORK
X=SPARE
YY → FACILITY INDEX
ZZZ→ A UNIQUE NUMBER

REV	DATE	BY	DESCRIPTION
1	11/2013	IY	ADDENDUM NO. 4

DESIGNED AMS
DRAWN VCP
CHECKED RAM
DATE SEPT 2013

REGISTERED PROFESSIONAL ENGINEER TIM R. VARELA No. 12079 ELECTRICAL STATE OF CALIFORNIA 9/16/2013

carollo®

SAN LUIS OBISPO COUNTY

SAN LUIS OBISPO COUNTY
LOS OSOS WATER RECYCLING FACILITY PROJECT
ELECTRICAL
DEWATERING BUILDING
CONDUIT SCHEDULE- III

VERIFY SCALES
BAR IS ONE INCH ON ORIGINAL DRAWING
0 1"
IF NOT ONE INCH ON THIS SHEET, ADJUST SCALES ACCORDINGLY

JOB NO. 8930A.11
DRAWING NO. 51E09
SHEET NO. 371 OF 549

PROJECT NO. 8930A.11 FILE NAME: 8930A1151E09.dgn

LAST SAVED BY: sfunckes Model: Layout1 ColorTable: gshade.ctb DesignScript: Carollo_Std_Pen_v0905.pen PlotScale: 2:1 User: SFunckes Plot Date: 07-NOV-2013 2:24:56 PM

CONDUIT SCHEDULE AREA 51

11/7/13

LOS OSOS WATER RECYCLING FACILITY

DEWATERING BUILDING

CONDUIT			CONDUCTORS			GROUND					
NUMBER	DWG	SIZE	#	SIZE	TYPE	#	SIZE	TYPE	DESCRIPTION		CONNECTING SEGMENTS
P-51-530	51E03	0.75"	6	#12	XHHW-2	1	#12	XHHW-2	FR:	JUNCTION BOX	
									TO:	MCC E	
									3 #12	>> POWER: 51-DRV-478B	P-51-528
									3 #12	>> POWER: 51-DRV-478C	P-51-529
P-51-531	51E02	0.75"	3	#10	XHHW-2	1	#10	XHHW-2	FR:	51-VCP-431	
									TO:	MCC-E	
									3 #10	>> POWER:51-VCP-431	
P-51-532	51E02	0.75"	3	#10	XHHW-2	1	#10	XHHW-2	FR:	51-VCP-432	
									TO:	MCC-F	
									3 #10	>> POWER:51-VCP-432	
P-51-631	51E03	0.75"	3	#12	XHHW-2	1	#12	XHHW-2	FR:	51-DISC-431	
									TO:	MCC-F	
									3 #12	>> POWER: 51-HOI-431	P-51-731
P-51-632	51E03	0.75"	3	#12	XHHW-2	1	#12	XHHW-2	FR:	51-DISC-432	
									TO:	MCC-F	
									3 #12	>> POWER: 51-HOI-432	P-51-732
P-51-731		0.75"	3	#12	XHHW-2	1	#12	XHHW-2	FR:	51-DISC-431	P-51-631
									TO:	51-HOI-431	
									3 #12	>> POWER: 51-HOI-431	
P-51-732		0.75"	3	#12	XHHW-2	1	#12	XHHW-2	FR:	51-DISC-432	P-51-632
									TO:	51-HOI-432	
									3 #12	>> POWER: 51-HOI-432	
S-51-100	51E02	0.75"	2	2/CS-#16		1	#14	XHHW-2	FR:	20-VFD-102	S-51-110
									TO:	CONDUIT TEE	
									2 2/CS-#16	>> SIGNAL: 20-VFD-102	
S-51-101	51E02	0.75"	2	2/CS-#16		1	#14	XHHW-2	FR:	20-VFD-101	S-51-110
									TO:	CONDUIT TEE	
									2 2/CS-#16	>> SIGNAL: 20-VFD-101	
S-51-102	51E02	0.75"	2	2/CS-#16		1	#14	XHHW-2	FR:	20-VFD-092	S-51-111
									TO:	CONDUIT TEE	
									2 2/CS-#16	>> SIGNAL: 20-VFD-092	
S-51-103	51E02	0.75"	2	2/CS-#16		1	#14	XHHW-2	FR:	20-VFD-091	S-51-112
									TO:	CONDUIT TEE	
									2 2/CS-#16	>> SIGNAL: 20-VFD-091	
S-51-110	51E02	1"	4	2/CS-#16		1	#14	XHHW-2	FR:	CONDUIT TEE	S-51-111
									TO:	CONDUIT TEE	
									2 2/CS-#16	>> SIGNAL: 20-VFD-101	S-51-101
									2 2/CS-#16	>> SIGNAL: 20-VFD-102	S-51-100
S-51-111	51E02	1.5"	6	2/CS-#16		1	#14	XHHW-2	FR:	CONDUIT TEE	S-51-112
									TO:	CONDUIT TEE	
									2 2/CS-#16	>> SIGNAL: 20-VFD-092	S-51-102
									2 2/CS-#16	>> SIGNAL: 20-VFD-101	S-51-110
									2 2/CS-#16	>> SIGNAL: 20-VFD-102	S-51-110
S-51-112	51E02	1.5"	8	2/CS-#16		1	#14	XHHW-2	FR:	CONDUIT TEE	
									TO:	PCM-2	
									2 2/CS-#16	>> SIGNAL: 20-VFD-091	S-51-103
									2 2/CS-#16	>> SIGNAL: 20-VFD-092	S-51-111
									2 2/CS-#16	>> SIGNAL: 20-VFD-101	S-51-111
									2 2/CS-#16	>> SIGNAL: 20-VFD-102	S-51-111
S-51-150	51E02	1.5"	6	2/CS-#16		1	#14	XHHW-2	FR:	MCC-E	
									TO:	PCM-2	
									2 2/CS-#16	>> SIGNAL: 04-PMP-501	
									2 2/CS-#16	>> SIGNAL: 50-PMP-423	
									2 2/CS-#16	>> SIGNAL: 50-PMP-121	
S-51-160	51E02	1.5"	8	2/CS-#16		1	#14	XHHW-2	FR:	MCC-E	
									TO:	PCM-2	
									2 2/CS-#16	>> SIGNAL: 04-PMP-502	
									2 2/CS-#16	>> SIGNAL: 50-PMP-427	
									2 2/CS-#16	>> SIGNAL: 50-PMP-122	
									2 2/CS-#16	>> SIGNAL: 50-PMP-123	
S-51-431	51E01	1"	1	2/CS-#16		1	#14	XHHW-2	FR:	51-S-431	
									TO:	51-VCP-431	
									1 2/CS-#16	>> SIGNAL: 51-S-431	
S-51-432	51E02	1"	1	2/CS-#16		1	#14	XHHW-2	FR:	51-S-432	
									TO:	51-VCP-432	
									1 2/CS-#16	>> SIGNAL: 51-S-432	
S-51-440	51E03	1"	3	2/CS-#16		1	#14	XHHW-2	FR:	JUNCTION BOX	
									TO:	PCM-2	
									1 2/CS-#16	>> SIGNAL: 51-WIT-441	S-51-441
									1 2/CS-#16	>> SIGNAL: 51-WIT-442	S-51-444
									1 2/CS-#16	>> SIGNAL: 51-WIT-443	S-51-444

CONDUIT SCHEDULE AREA 51

11/7/13

LOS OSOS WATER RECYCLING FACILITY

DEWATERING BUILDING

CONDUIT			CONDUCTORS			GROUND					
NUMBER	DWG	SIZE	#	SIZE	TYPE	#	SIZE	TYPE	DESCRIPTION		CONNECTING SEGMENTS
S-51-441	51E01	0.75"	1	2/CS-#16		1	#14	XHHW-2	FR:	51-WIT-441	S-51-440
									TO:	JUNCTION BOX	
									1 2/CS-#16	>> SIGNAL: 51-WIT-441	
S-51-442	51E01	0.75"	1	2/CS-#16		1	#14	XHHW-2	FR:	51-WIT-442	S-51-444
									TO:	JUNCTION BOX	
									1 2/CS-#16	>> SIGNAL: 51-WIT-442	
S-51-443	51E01	0.75"	1	2/CS-#16		1	#14	XHHW-2	FR:	51-WIT-443	S-51-444
									TO:	JUNCTION BOX	
									1 2/CS-#16	>> SIGNAL: 51-WIT-443	
S-51-444	51E01	0.75"	2	2/CS-#16		1	#14	XHHW-2	FR:	JUNCTION BOX	S-51-440
									TO:	JUNCTION BOX	
									1 2/CS-#16	>> SIGNAL: 51-WIT-442	S-51-442
									1 2/CS-#16	>> SIGNAL: 51-WIT-443	S-51-443
S-51-451	51E01 51E02	0.75"	2	2/CS-#16		1	#14	XHHW-2	FR:	51-PBU-451	
									TO:	PCM-2	
									2 2/CS-#16	>> SIGNAL: 51-PBU-451	
S-51-452	51E01 51E02	0.75"	2	2/CS-#16		1	#14	XHHW-2	FR:	51-PBU-452	
									TO:	PCM-2	
									2 2/CS-#16	>> SIGNAL: 51-PBU-452	
S-51-453	51E01 51E02	0.75"	2	2/CS-#16		1	#14	XHHW-2	FR:	51-PBU-453	
									TO:	PCM-2	
									2 2/CS-#16	>> SIGNAL: 51-PBU-453	
S-51-541	51E01	0.75"	1	MFR	CABLE	1	#14	XHHW-2	FR:	51-WE-441	
									TO:	51-WIT-441	
									1 MFR	>> ELEMENT CABLE: 51-WIT-441	
S-51-542	51E01	0.75"	1	MFR	CABLE	1	#14	XHHW-2	FR:	51-WE-442	
									TO:	51-WIT-442	
									1 MFR	>> ELEMENT CABLE: 51-WIT-442	
S-51-543	51E01	0.75"	1	MFR	CABLE	1	#14	XHHW-2	FR:	51-WE-443	
									TO:	51-WIT-443	
									1 MFR	>> SIGNAL: 51-WIT-443	
S-51-640	51E03	0.75"	1	MFR	CABLE	1	#14	XHHW-2	FR:	51-XE1-470	S-51-642
									TO:	JUNCTION BOX	
									1 MFR	>> SIGNAL: 51-XE1-470	
S-51-641	51E03	0.75"	1	MFR	CABLE	1	#14	XHHW-2	FR:	51-XE2-470	S-51-642
									TO:	JUNCTION BOX	
									1 MFR	>> SIGNAL: 51-XE2-470	
S-51-642	51E03	0.75"	2	MFR	CABLE	1	#14	XHHW-2	FR:	JUNCTION BOX	
									TO:	51-VCP-470	
									1 MFR	>> SIGNAL: 51-XE1-470	S-51-640
									1 MFR	>> SIGNAL: 51-XE2-470	S-51-641
S-51-643	51E03	0.75"	1	MFR	CABLE	1	#14	XHHW-2	FR:	51-TIC-470	
									TO:	51-VCP-440	
									1 MFR	>> SIGNAL:51-TIC-470	
S-51-742	51E03	0.75"	1	MFR	CABLE	1	#14	XHHW-2	FR:	PCM-2	
									TO:	TELEPHONE AT ROLL UP DOOR	
									1 MFR	>> TELEPHONE CABLE	
X-51-110	51E06	0.75"	1	PULL	ROPE				FR:	CONTROL ROOM	
									TO:	ADMINSTRATION CONTROL ROOM VIA HH-S05/S12/S04	
									1 PULL	>> SPARE	
X-51-111	51E06	0.75"	1	PULL	ROPE				FR:	CONTROL ROOM	
									TO:	ADMINSTRATION CONTROL ROOM VIA HH-S05/S12/S04	
									1 PULL	>> SPARE	
X-51-112	51E06	0.75"	1	PULL	ROPE				FR:	CONTROL ROOM	
									TO:	ADMINSTRATION CONTROL ROOM VIA HH-S05/S12/S04	
									1 PULL	>> SPARE	

END OF CONDUIT SCHEDULE

GENERAL NOTES:

CONDUIT IDENTIFICATION
V-YY-ZZZ
LEGEND:
V → M= MEDIUM VOLTAGE POWER
P= 480V OR 277V POWER
L=120V, 208, OR 240 POWER
C=DISCRETE CONTROL (120VAC)
S= SIGNAL (4-20MA)
N= NETWORK
X=SPARE
YY → FACILITY INDEX
ZZZ→ A UNIQUE NUMBER

REV	DATE	BY	DESCRIPTION
1	11/2013	IY	ADDENDUM NO. 4

DESIGNED AMS
DRAWN VCP
CHECKED RAM
DATE SEPT 2013

REGISTERED PROFESSIONAL ENGINEER IAN R. VARLEY No. 12879 ELECTRICAL STATE OF CALIFORNIA 9/16/2013

carollo®

SAN LUIS OBISPO COUNTY

SAN LUIS OBISPO COUNTY
LOS OSOS WATER RECYCLING FACILITY PROJECT
ELECTRICAL
DEWATERING BUILDING
CONDUIT SCHEDULE- IV

VERIFY SCALES
BAR IS ONE INCH ON ORIGINAL DRAWING
0 1"
IF NOT ONE INCH ON THIS SHEET, ADJUST SCALES ACCORDINGLY

JOB NO. 8930A.11
DRAWING NO. 51E10
SHEET NO. 372 OF 549

Plot Date: 07-NOV-2013 2:23:13 PM
User: SFunckes
PlotScale: 2:1
DesignScript: Carollo_Std_Pen_v0905.pen
ColorTable: gshade.ctb
Model: Layout1
LAST SAVED BY: ejohnson
PROJECT NO. 8930A.11 FILE NAME: 8930A1151E10.dgn

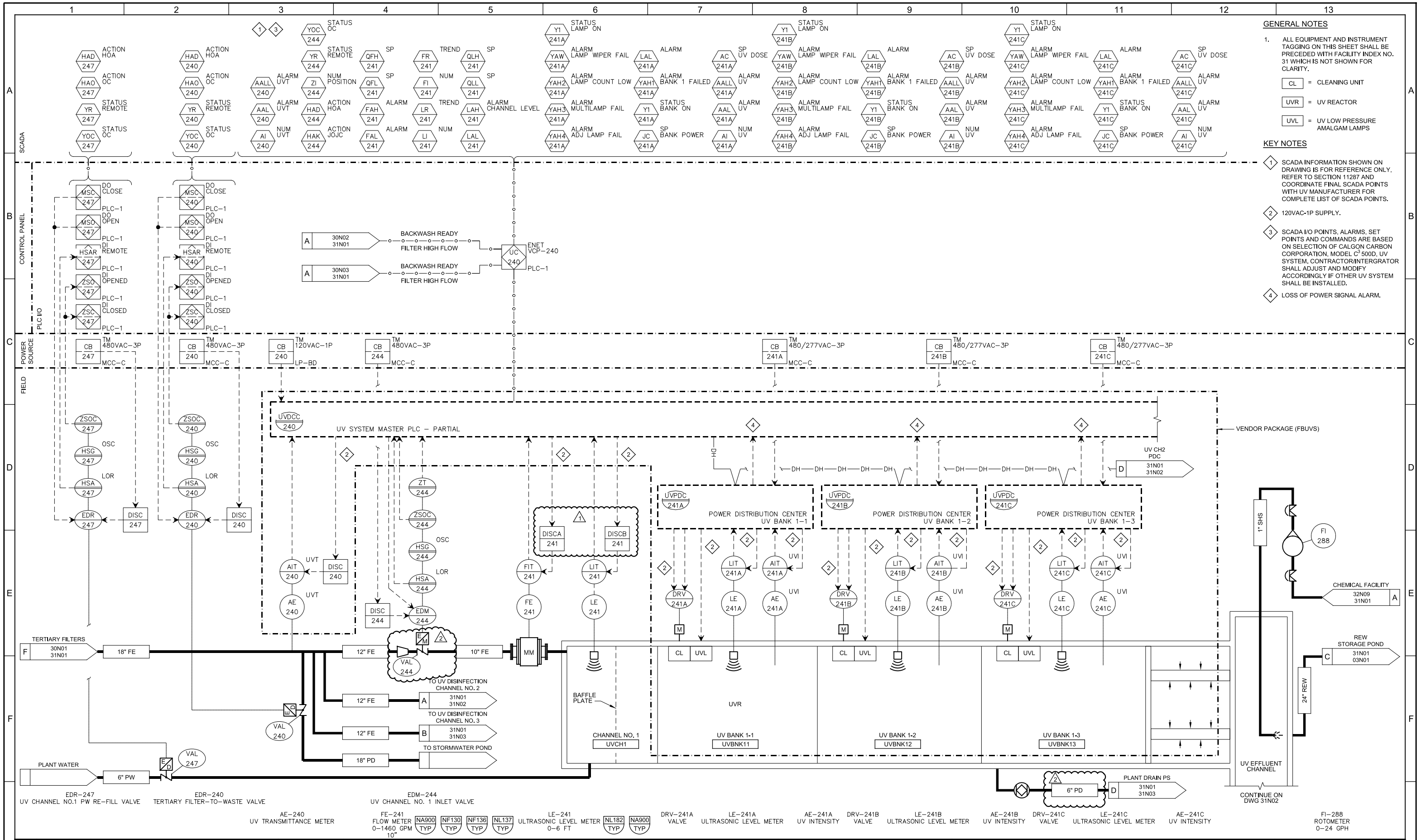

GENERAL NOTES

1. ALL EQUIPMENT AND INSTRUMENT TAGGING ON THIS SHEET SHALL BE PRECEDED WITH FACILITY INDEX NO. 31 WHICH IS NOT SHOWN FOR CLARITY.

CL = CLEANING UNIT

UVR = UV REACTOR

UVL = UV LOW PRESSURE AMALGAM LAMPS

KEY NOTES

1. SCADA INFORMATION SHOWN ON DRAWING IS FOR REFERENCE ONLY, REFER TO SECTION 11287 AND COORDINATE FINAL SCADA POINTS WITH UV MANUFACTURER FOR COMPLETE LIST OF SCADA POINTS.
2. 120VAC-1P SUPPLY.
3. SCADA I/O POINTS, ALARMS, SET POINTS AND COMMANDS ARE BASED ON SELECTION OF CALGON CARBON CORPORATION, MODEL C^3 500D, UV SYSTEM. CONTRACTOR/INTERGRATOR SHALL ADJUST AND MODIFY ACCORDINGLY IF OTHER UV SYSTEM SHALL BE INSTALLED.
4. LOSS OF POWER SIGNAL ALARM.

REV	DATE	BY	DESCRIPTION
2	11/2013	HGK	ADDENDUM NO. 4
1	11/2013	HGK	ADDENDUM NO. 3

DESIGNED PCK
DRAWN CGR
CHECKED RAM
DATE SEPT 2013

REGISTERED PROFESSIONAL ENGINEER CARLO A. GROSSI No. 16851 ELECTRICAL STATE OF CALIFORNIA
9/16/2013

carollo

SAN LUIS OBISPO COUNTY

SAN LUIS OBISPO COUNTY
LOS OSOS WATER RECYCLING FACILITY PROJECT
INSTRUMENTATION
UV DISINFECTION CHANNEL NO. 1

VERIFY SCALES
BAR IS ONE INCH ON ORIGINAL DRAWING
0 1"
IF NOT ONE INCH ON THIS SHEET, ADJUST SCALES ACCORDINGLY

JOB NO. 8930A.11
DRAWING NO. 31N01
SHEET NO. 433 OF 549

LAST SAVED BY: dimada

PROJECT NO. 8930A.11 FILE NAME: 8930A1131N001.dwg

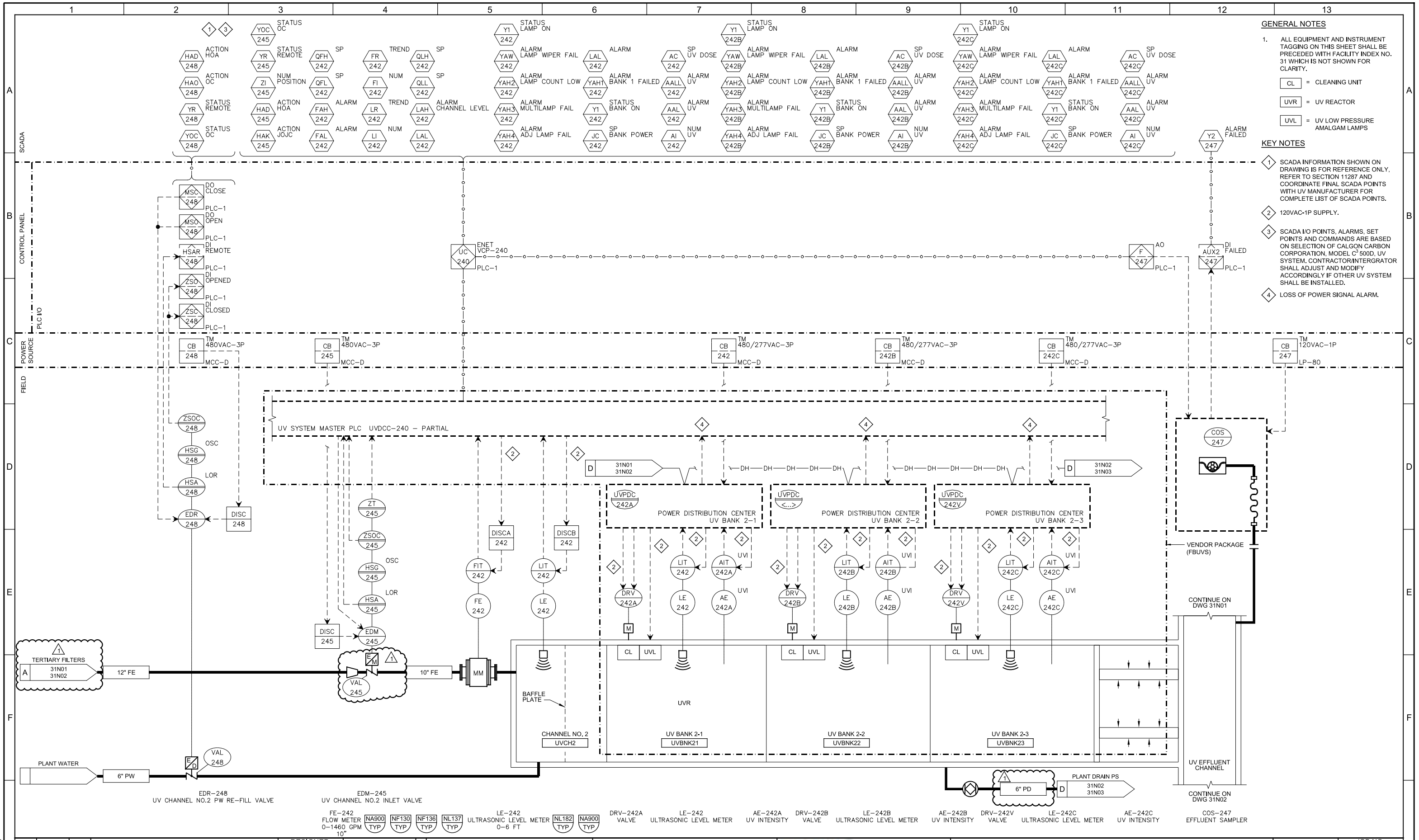

GENERAL NOTES

1. ALL EQUIPMENT AND INSTRUMENT TAGGING ON THIS SHEET SHALL BE PRECEDED WITH FACILITY INDEX NO. 31 WHICH IS NOT SHOWN FOR CLARITY.

CL = CLEANING UNIT

UVR = UV REACTOR

UVL = UV LOW PRESSURE AMALGAM LAMPS

KEY NOTES

1. SCADA INFORMATION SHOWN ON DRAWING IS FOR REFERENCE ONLY, REFER TO SECTION 11287 AND COORDINATE FINAL SCADA POINTS WITH UV MANUFACTURER FOR COMPLETE LIST OF SCADA POINTS.
2. 120VAC-1P SUPPLY.
3. SCADA I/O POINTS, ALARMS, SET POINTS AND COMMANDS ARE BASED ON SELECTION OF CALGON CARBON CORPORATION, MODEL C^3 500D, UV SYSTEM. CONTRACTOR/INTERGRATOR SHALL ADJUST AND MODIFY ACCORDINGLY IF OTHER UV SYSTEM SHALL BE INSTALLED.
4. LOSS OF POWER SIGNAL ALARM.

REV	DATE	BY	DESCRIPTION
1	11/2013	HGK	ADDENDUM NO. 4

DESIGNED PCK
DRAWN CGR
CHECKED RAM
DATE SEPT 2013

REGISTERED PROFESSIONAL ENGINEER CARLO A. GRAS No. 16851 ELECTRICAL STATE OF CALIFORNIA
9/16/2013

carollo

SAN LUIS OBISPO COUNTY

SAN LUIS OBISPO COUNTY
LOS OSOS WATER RECYCLING FACILITY PROJECT
INSTRUMENTATION
UV DISINFECTION CHANNEL NO. 2

VERIFY SCALES
BAR IS ONE INCH ON ORIGINAL DRAWING
0 1"
IF NOT ONE INCH ON THIS SHEET, ADJUST SCALES ACCORDINGLY

JOB NO. 8930A.11
DRAWING NO. 31N02
SHEET NO. 434 OF 549

LAST SAVED BY: dimada

PROJECT NO. 8930A.11 FILE NAME: 8930A1131N002.dwg

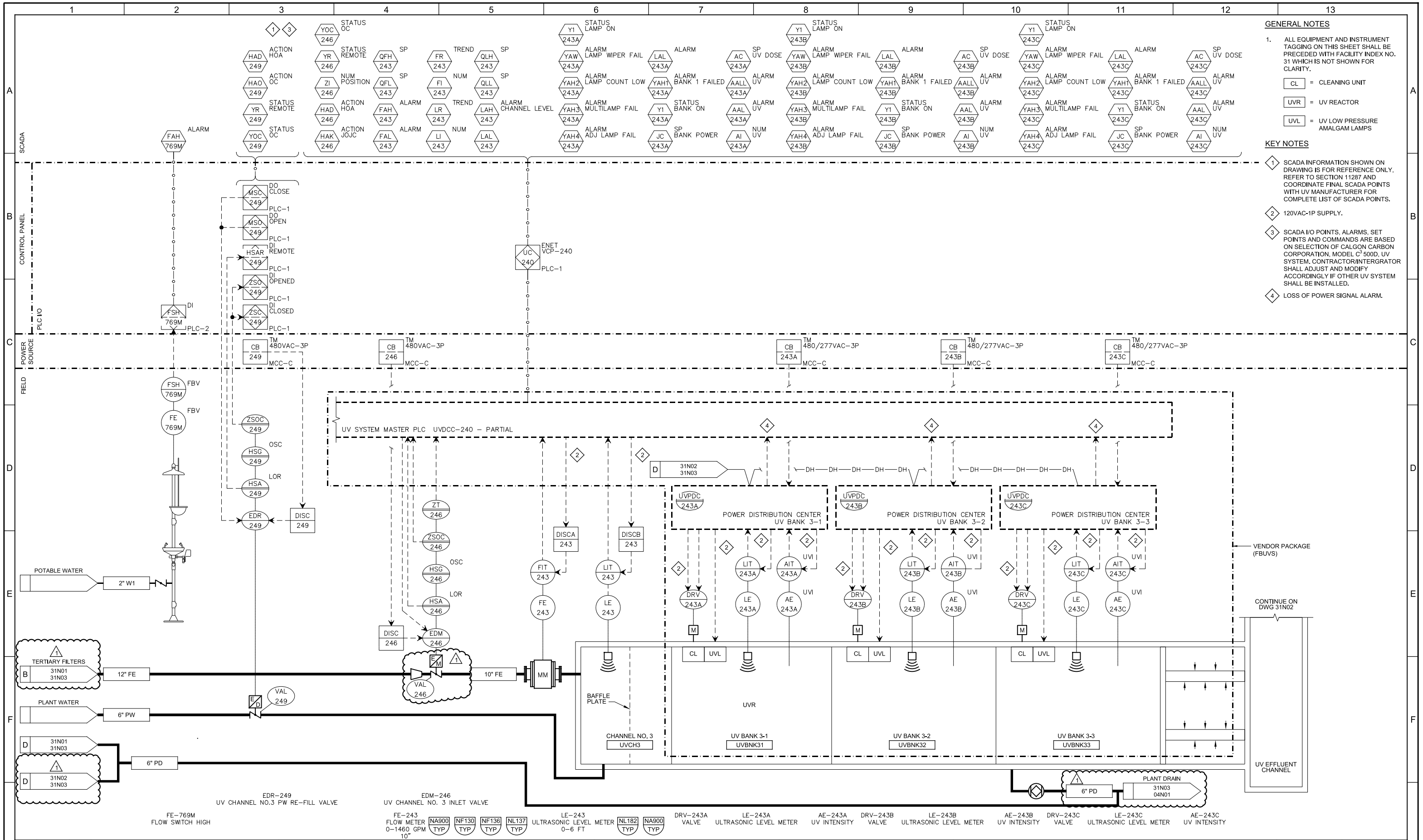

GENERAL NOTES

1. ALL EQUIPMENT AND INSTRUMENT TAGGING ON THIS SHEET SHALL BE PRECEDED WITH FACILITY INDEX NO. 31 WHICH IS NOT SHOWN FOR CLARITY.

CL = CLEANING UNIT

UVR = UV REACTOR

UVL = UV LOW PRESSURE AMALGAM LAMPS

KEY NOTES

1. SCADA INFORMATION SHOWN ON DRAWING IS FOR REFERENCE ONLY, REFER TO SECTION 11287 AND COORDINATE FINAL SCADA POINTS WITH UV MANUFACTURER FOR COMPLETE LIST OF SCADA POINTS.
2. 120VAC-1P SUPPLY.
3. SCADA I/O POINTS, ALARMS, SET POINTS AND COMMANDS ARE BASED ON SELECTION OF CALGON CARBON CORPORATION, MODEL C^3 500D, UV SYSTEM. CONTRACTOR/INTERGRATOR SHALL ADJUST AND MODIFY ACCORDINGLY IF OTHER UV SYSTEM SHALL BE INSTALLED.
4. LOSS OF POWER SIGNAL ALARM.

REV	DATE	BY	DESCRIPTION
1	11/2013	HGK	ADDENDUM NO. 4

DESIGNED PCK
DRAWN CGR
CHECKED RAM
DATE SEPT 2013

REGISTERED PROFESSIONAL ENGINEER CARLO A. GRIGGS No. 18851 ELECTRICAL STATE OF CALIFORNIA
9/16/2013

carollo

SAN LUIS OBISPO COUNTY

SAN LUIS OBISPO COUNTY
LOS OSOS WATER RECYCLING FACILITY PROJECT
INSTRUMENTATION
UV DISINFECTION CHANNEL NO. 3

VERIFY SCALES
BAR IS ONE INCH ON ORIGINAL DRAWING
0 1"
IF NOT ONE INCH ON THIS SHEET, ADJUST SCALES ACCORDINGLY

JOB NO. 8930A.11
DRAWING NO. 31N03
SHEET NO. 435 OF 549

LAST SAVED BY: dimada

PROJECT NO. 8930A.11 FILE NAME: 8930A1131N003.dwg

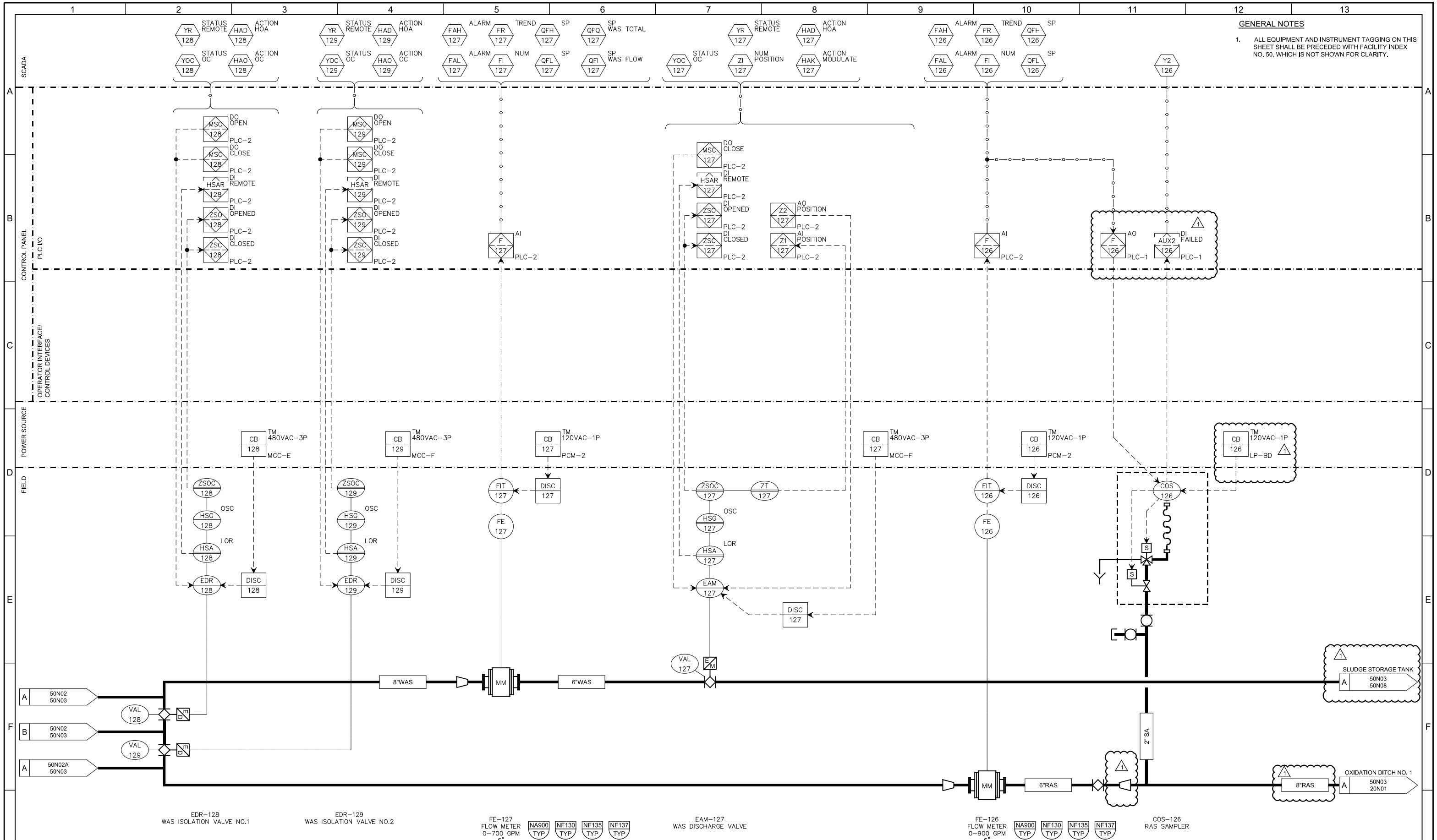

GENERAL NOTES

1. ALL EQUIPMENT AND INSTRUMENT TAGGING ON THIS SHEET SHALL BE PRECEDED WITH FACILITY INDEX NO. 50, WHICH IS NOT SHOWN FOR CLARITY.

REV	DATE	BY	DESCRIPTION
1	11/2013	HGK	ADDENDUM NO. 4

DESIGNED CAG
DRAWN AD
CHECKED RAM
DATE SEPT 2013

REGISTERED PROFESSIONAL ENGINEER CARLO A. GROSS No. 16851 ELECTRICAL STATE OF CALIFORNIA
9/16/2013

carollo

SAN LUIS OBISPO COUNTY

SAN LUIS OBISPO COUNTY
LOS OSOS WATER RECYCLING FACILITY PROJECT
INSTRUMENTATION
RAS WAS PUMPS - 4

VERIFY SCALES
BAR IS ONE INCH ON ORIGINAL DRAWING
0 1"
IF NOT ONE INCH ON THIS SHEET, ADJUST SCALES ACCORDINGLY

JOB NO. 8930A.11
DRAWING NO. 50N03
SHEET NO. 452 OF 549

LAST SAVED BY: dimada

PROJECT NO. 8930A.11 FILE NAME: 8930A1150N003.dwg

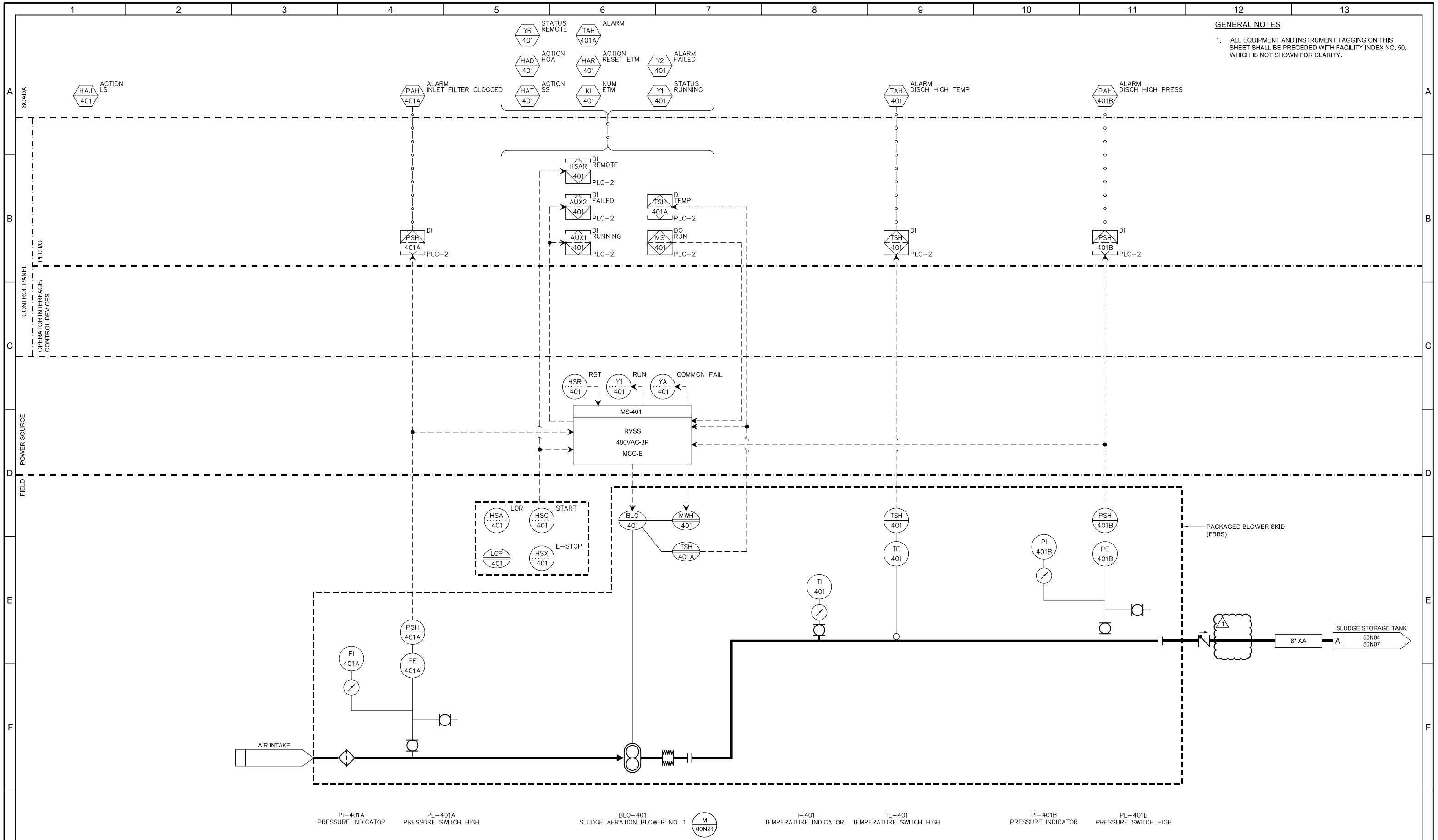

REV	DATE	BY	DESCRIPTION
1	11/2013	HGK	ADDENDUM NO. 4

DESIGNED PCK
DRAWN CGR
CHECKED RAM
DATE SEPT 2013

REGISTERED PROFESSIONAL ENGINEER CARLO A. GROSSI No. 18851 ELECTRICAL STATE OF CALIFORNIA
9/16/2013

carollo

SAN LUIS OBISPO COUNTY

SAN LUIS OBISPO COUNTY
LOS OSOS WATER RECYCLING FACILITY PROJECT
INSTRUMENTATION
SLUDGE AERATION BLOWER NO. 1

VERIFY SCALES
BAR IS ONE INCH ON ORIGINAL DRAWING
0 1"
IF NOT ONE INCH ON THIS SHEET, ADJUST SCALES ACCORDINGLY

JOB NO. 8930A.11
DRAWING NO. 50N04
SHEET NO. 453 OF 549

LAST SAVED BY: dimada

PROJECT NO. 8930A.11 FILE NAME: 8930A1150N004.dwg

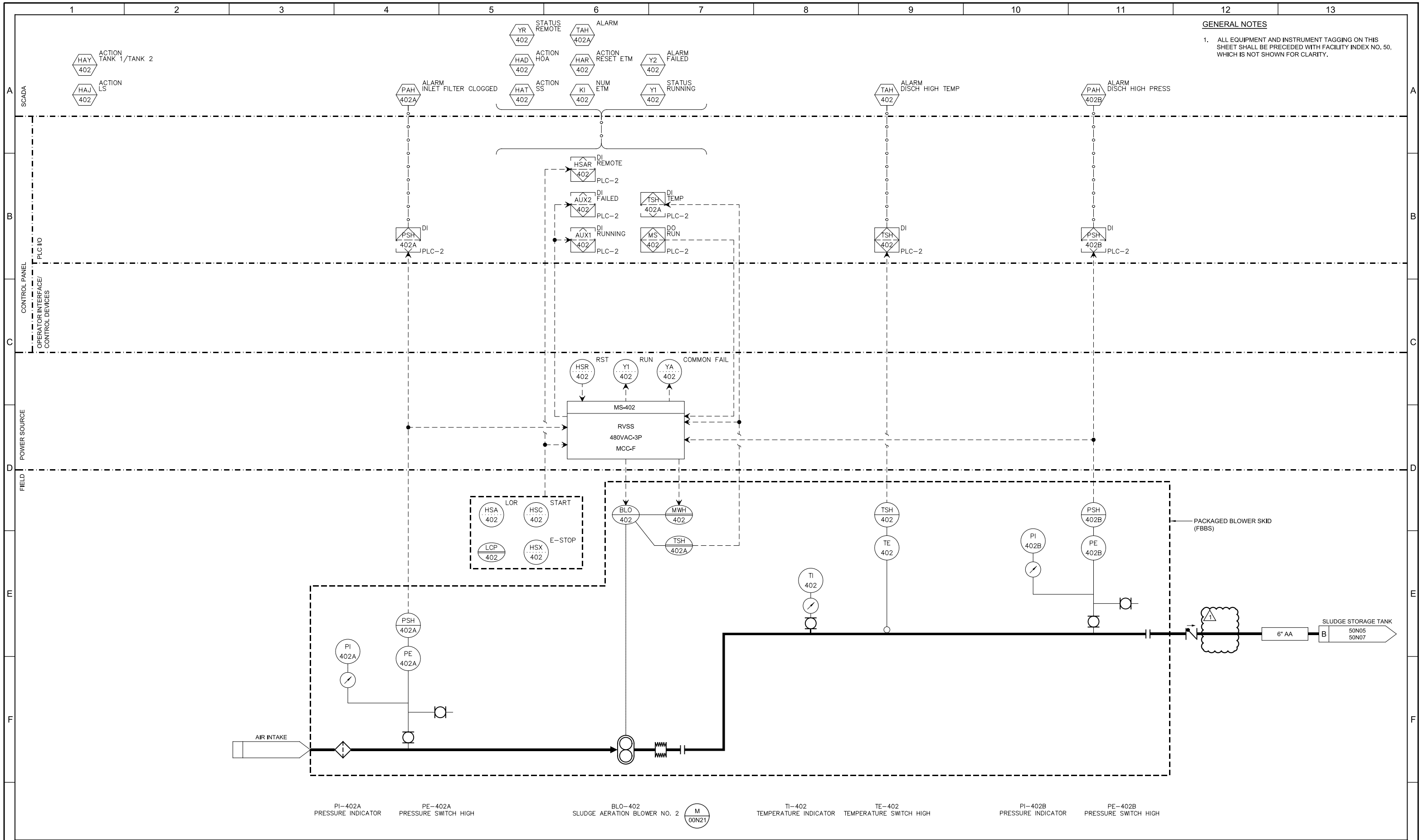

REV	DATE	BY	DESCRIPTION
1	11/2013	HGK	ADDENDUM NO. 4

DESIGNED PCK
DRAWN CGR
CHECKED RAM
DATE SEPT 2013

REGISTERED PROFESSIONAL ENGINEER CARLO A. GROSSI No. 18851 ELECTRICAL STATE OF CALIFORNIA
9/16/2013

carollo

SAN LUIS OBISPO COUNTY

SAN LUIS OBISPO COUNTY
LOS OSOS WATER RECYCLING FACILITY PROJECT
INSTRUMENTATION
SLUDGE AERATION BLOWER NO. 2

VERIFY SCALES
BAR IS ONE INCH ON ORIGINAL DRAWING
0 1"
IF NOT ONE INCH ON THIS SHEET, ADJUST SCALES ACCORDINGLY

JOB NO. 8930A.11
DRAWING NO. 50N05
SHEET NO. 454 OF 549

LAST SAVED BY: dimada

PROJECT NO. 8930A.11 FILE NAME: 8930A1150N005.dwg

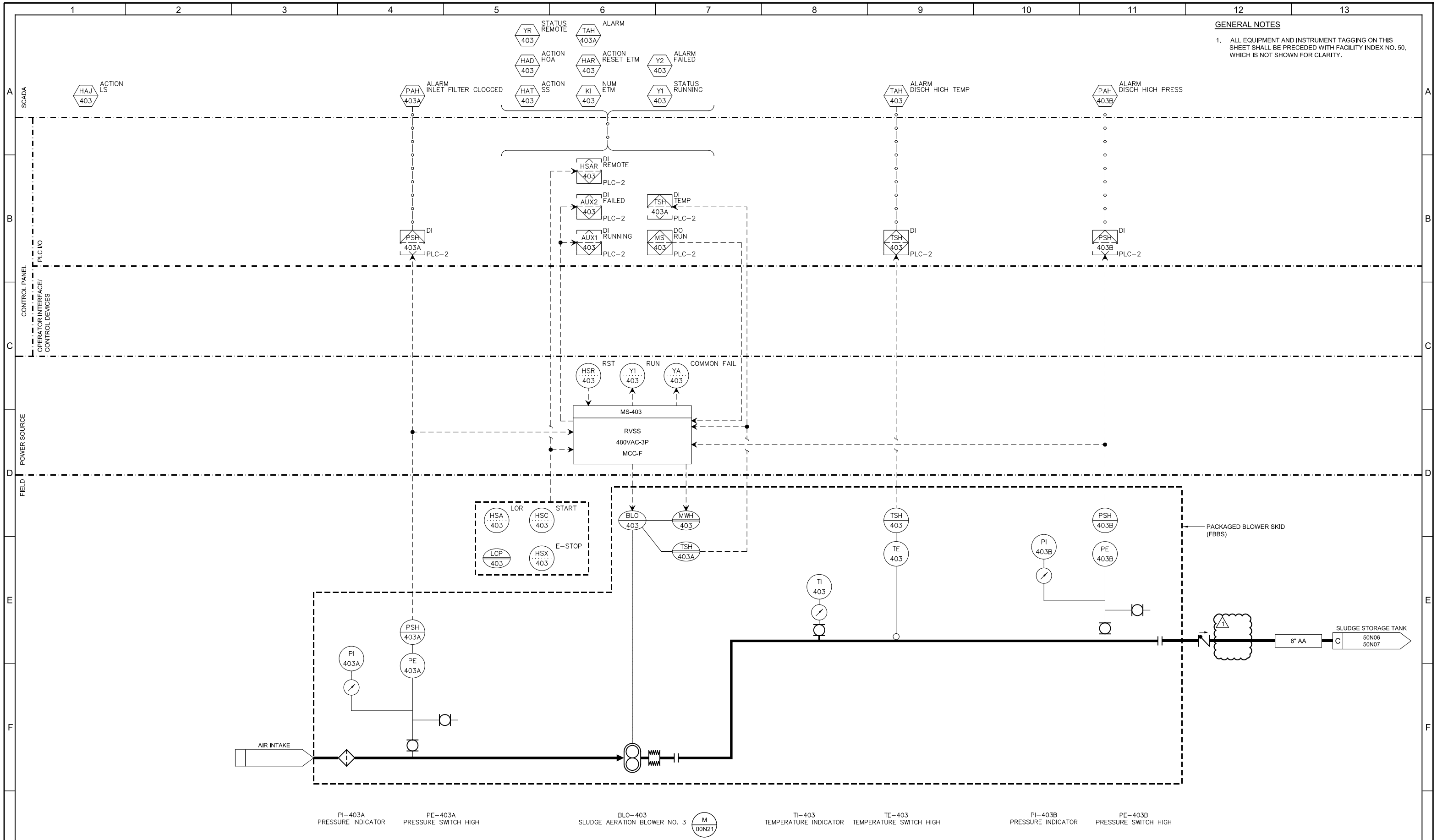

REV	DATE	BY	DESCRIPTION
1	11/2013	HGK	ADDENDUM NO. 4

DESIGNED PCK
DRAWN CGR
CHECKED RAM
DATE SEPT 2013

REGISTERED PROFESSIONAL ENGINEER CARLO A. GROSSI No. 18851 ELECTRICAL STATE OF CALIFORNIA
9/16/2013

carollo

SAN LUIS OBISPO COUNTY

SAN LUIS OBISPO COUNTY
LOS OSOS WATER RECYCLING FACILITY PROJECT
INSTRUMENTATION
SLUDGE AERATION BLOWER NO. 3

VERIFY SCALES
BAR IS ONE INCH ON ORIGINAL DRAWING
0 1"
IF NOT ONE INCH ON THIS SHEET, ADJUST SCALES ACCORDINGLY

JOB NO. 8930A.11
DRAWING NO. 50N06
SHEET NO. 455 OF 549

LAST SAVED BY: dimada

PROJECT NO. 8930A.11 FILE NAME: 8930A1150N006.dwg

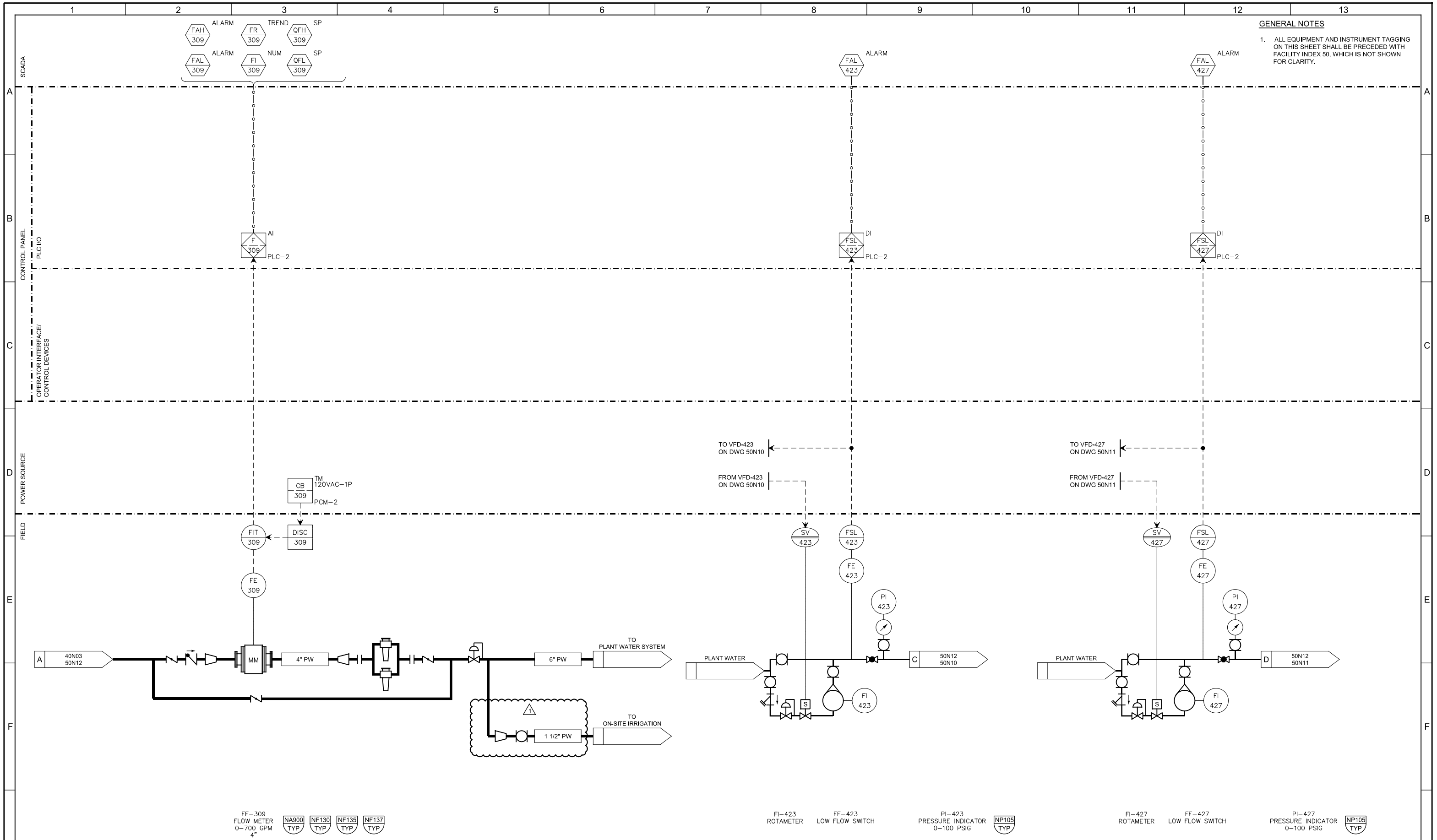

GENERAL NOTES

1. ALL EQUIPMENT AND INSTRUMENT TAGGING ON THIS SHEET SHALL BE PRECEDED WITH FACILITY INDEX 50, WHICH IS NOT SHOWN FOR CLARITY.

REV	DATE	BY	DESCRIPTION
1	11/2013	HGK	ADDENDUM NO. 4

DESIGNED CAG
DRAWN CGR
CHECKED RAM
DATE SEPT 2013

REGISTERED PROFESSIONAL ENGINEER CARLO A. GROSSI No. 16851 ELECTRICAL STATE OF CALIFORNIA
9/16/2013

carollo®

SAN LUIS OBISPO COUNTY

SAN LUIS OBISPO COUNTY
LOS OSOS WATER RECYCLING FACILITY PROJECT
INSTRUMENTATION
DEWATERING FEED PUMPS SEAL WATER

VERIFY SCALES
BAR IS ONE INCH ON ORIGINAL DRAWING
0 1"
IF NOT ONE INCH ON THIS SHEET, ADJUST SCALES ACCORDINGLY

JOB NO. 8930A.11
DRAWING NO. 50N12
SHEET NO. 461 OF 549

LAST SAVED BY: dimada

PROJECT NO. 8930A.11 FILE NAME: 8930A1150N012.dwg

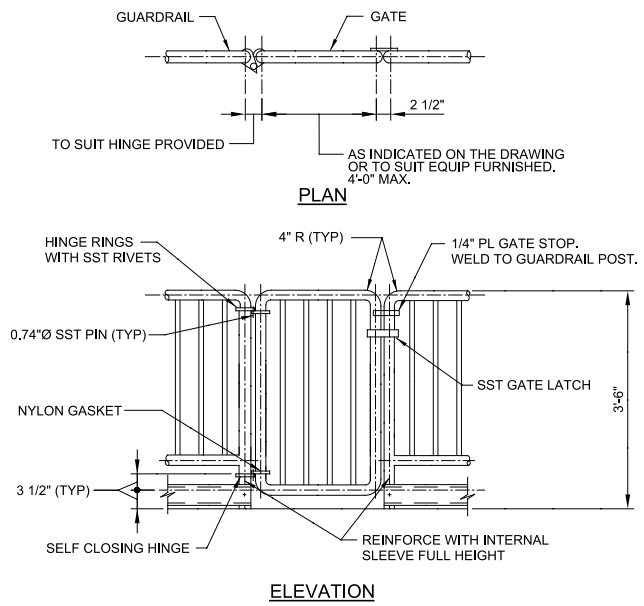

NOTES:

1. GATE MATERIAL AND FINISH SHALL MATCH GUARDRAIL.
2. GATE SHALL OPEN TOWARD THE WALKWAY.

A353 TYP — GATE AT PICKET GUARDRAIL

N 12/13/05

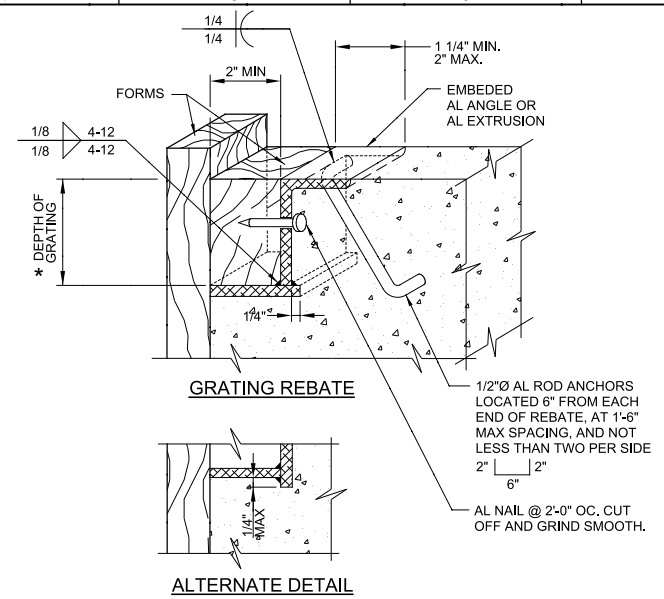

NOTES:

1. FOR AL GRATING, SEE SPECIFICATIONS.
2. REBATE ANGLE SHALL BE CONTINUOUS AROUND ENTIRE OPENING.
3. ANGLE AND BEARING PLATE SHALL BE 1/4" MIN THICK.
4. REBATE MAY BE EXTRUDED, SUBJECT TO ENGINEER'S ACCEPTANCE.
5. COAT ALUMINUM SURFACES IN CONTACT WITH CONCRETE AS SPECIFIED.
6. * = DIMENSION AS REQUIRED BY GRATING MANUFACTURER.

A400 TYP — ALUMINUM GRATING REBATE AND SEAT

NS SHEET 1 OF 2 06/06/13

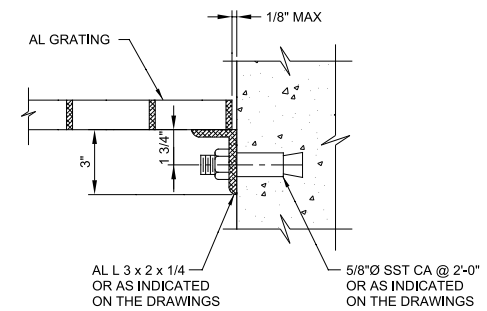

A400 TYP — ALUMINUM GRATING REBATE AND SEAT

NS SHEET 2 OF 2 06/06/13

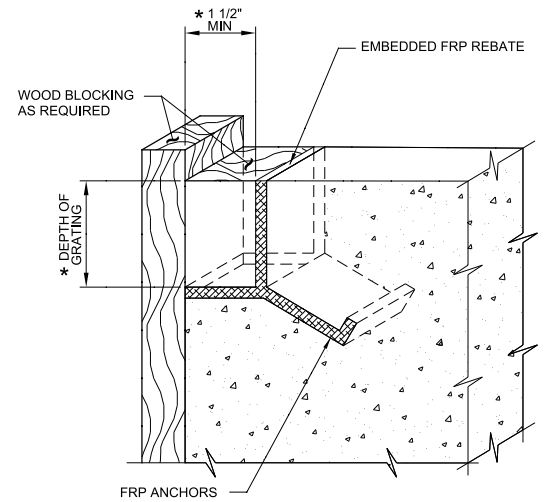

NOTES:

1. FOR FRP GRATING, SEE SPECIFICATIONS.
2. REBATE ANGLE SHALL BE CONTINUOUS AROUND ENTIRE OPENING.
3. REBATE ANGLE SHALL BE 1/4" MINIMUM THICKNESS.
4. REBATE MAY BE EXTRUDED.
5. * = DIMENSION AS REQUIRED BY GRATING MANUFACTURER.

A401 TYP — FRP GRATING REBATE AND SEAT

S SHEET 1 OF 2 07/31/08

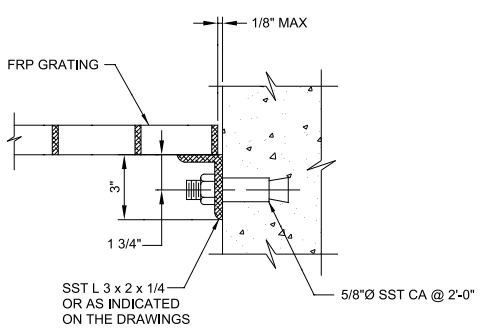

A401 TYP — FRP GRATING REBATE AND SEAT

S SHEET 2 OF 2 07/131/08

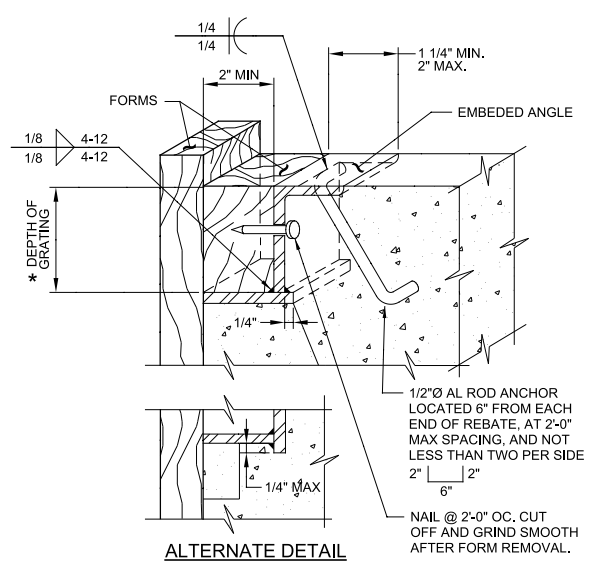

NOTES:

1. REBATE SHALL BE CONTINUOUS AROUND ENTIRE OPENING.
2. PLATE SHALL BE 1/4" MIN THICK.
3. HOT-DIP GALV AFTER FABRICATION.

A406 TYP — H-20 HEAVY DUTY GRATING REBATE (1)

07/31/08

REV	DATE	BY	DESCRIPTION
1	11/2013	HGK	ADDENDUM NO. 4

DESIGNED LRS
DRAWN PS
CHECKED WTT
DATE SEPT 2013

REGISTERED PROFESSIONAL ENGINEER — LOUIS R. SCHIAVONE — No. 47810 — CIVIL — STATE OF CALIFORNIA — 9/16/2013

carollo

SAN LUIS OBISPO COUNTY

SAN LUIS OBISPO COUNTY
LOS OSOS WATER RECYCLING FACILITY PROJECT
ARCHITECTURAL TYPICAL DETAILS

VERIFY SCALES — BAR IS ONE INCH ON ORIGINAL DRAWING 0 1" — IF NOT ONE INCH ON THIS SHEET, ADJUST SCALES ACCORDINGLY

JOB NO. 8930A.11
DRAWING NO. AT07
SHEET NO. OF 549

Plot Date: 07-NOV-2013 1:52:50 PM User: PSanchez PlotScale: 2:1 DesignScript: Carollo_Std_Pen_v0905.pen ColorTable: gshade.ctb Model: Layout1 LAST SAVED BY: psanchez

PROJECT NO. 8930A.11 FILE NAME: 8930A11_00AT07.dgn

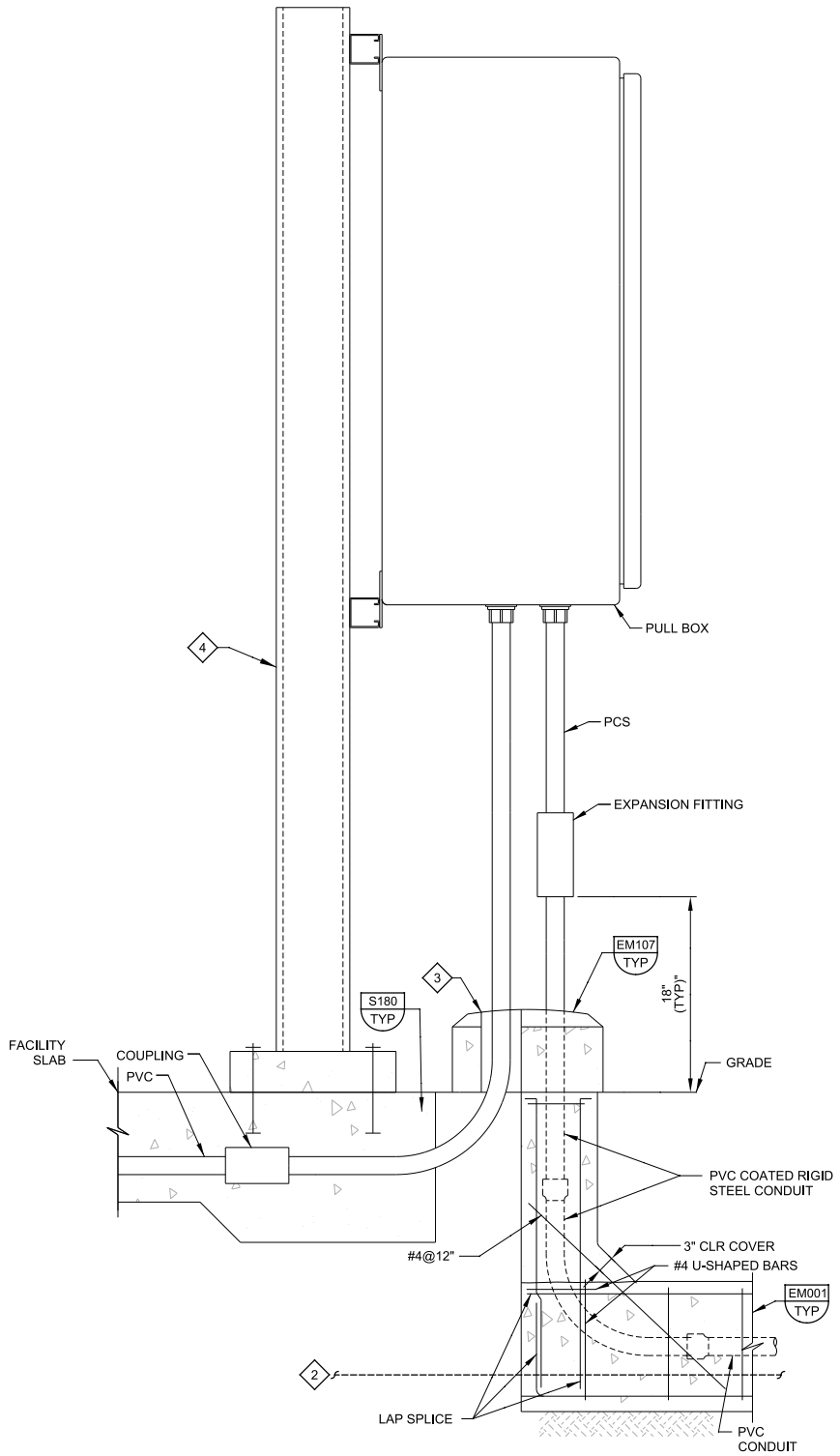

KEY NOTES:

1. PROVIDE CONDUIT HOUSE KEEPING CURB AT ALL LOCATIONS WHERE THE CONDUIT IS NOT PROTECTED BY AN EQUIPMENT PAD.
2. CONNECT TO FACILITY GROUND LOOP.
3. PVC SLEAVE SIZE FOR OUTGOING CONDUIT.
4. TYPICAL PULL BOX OR PANEL SUPPORT EM201, 202, 210 OR 216.

EM910 TYP J — RISER FROM DUCTBANK SLAB ON GRADE

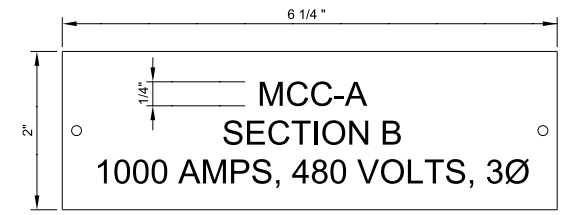

OVERALL ELECTRICAL EQUIPMENT

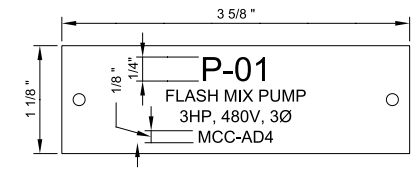

STARTER OR CIRCUIT BREAKER COMPARTMENT

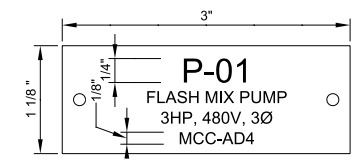

DISCONNECT, LOCAL CONTROL PANEL

NOTES:

1. REFER TO THE SPECIFICATIONS FOR MATERIALS AND COLOR SCHEMES.
2. NAMEPLATE DIMENSIONS ARE APPROXIMATE.

EN001 TYP S — TYPICAL ELECTRICAL EQUIPMENT NAMPLATES

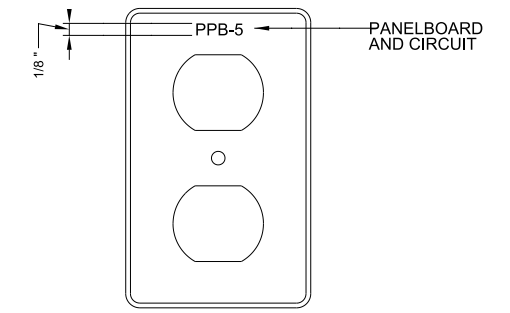

RECEPTACLE

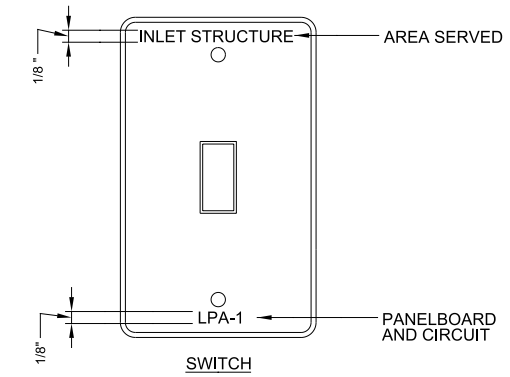

SWITCH

NOTES:

1. ENGRAVE CIRCUIT DESIGNATION DIRECTLY ONTO DEVICE COVER PLATE. FILL LETTERING WITH BLACK ENAMEL.

EN002 TYP S — TYPICAL PLATE IDENTIFICATION

REV	DATE	BY	DESCRIPTION
1	11/2013	IY	ADDENDUM NO. 4

DESIGNED IRV
DRAWN PS
CHECKED RAM
DATE SEPT 2013

REGISTERED PROFESSIONAL ENGINEER — IAN A. VARLEY — No. 12879 — ELECTRICAL — STATE OF CALIFORNIA — 9/16/2013

carollo®

SAN LUIS OBISPO COUNTY

SAN LUIS OBISPO COUNTY
LOS OSOS WATER RECYCLING FACILITY PROJECT
ELECTRICAL
TYPICAL DETAILS

VERIFY SCALES
BAR IS ONE INCH ON ORIGINAL DRAWING
0 — 1"
IF NOT ONE INCH ON THIS SHEET, ADJUST SCALES ACCORDINGLY

JOB NO. 8930A.11
DRAWING NO. ET19
SHEET NO. OF 549

PROJECT NO. 8930A.11 FILE NAME: 8930A11_00ET19.dgn

User: SFunckes Pltd Date: 08-NOV-2013 10:06:52 AM PlotScale: 2:1 DesignScript: Carollo_Std_Pen_v0905.pen ColorTable: gshade.ctb Model: Layout1 LAST SAVED BY: sfunckes