SAN LUIS OBISPO COUNTY

RECOMMENDED FOR APPROVAL:

John Waddell 9/26/13

LOS OSOS WASTEWATER PROJECT MANAGER DATE

APPROVED:

Dave Flynn 9/26/13

DEPUTY DIRECTOR OF PUBLIC WORKS DATE

LOS OSOS WATER RECYCLING FACILITY PROJECT

CONTRACT NO. 300448.08.02

SEPTEMBER 2013

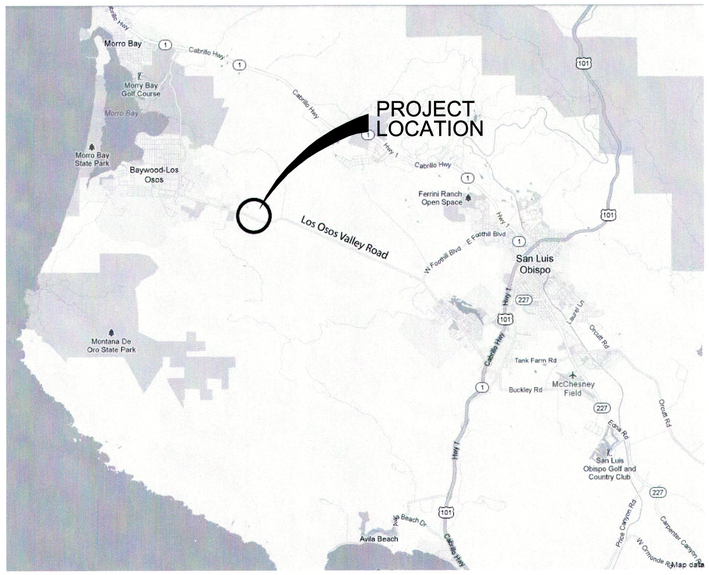

VICINITY MAP

NOT TO SCALE

VOLUME 2 OF 2

LOCATION MAP

NOT TO SCALE

THE STRUCTURES HAVE BEEN DESIGNED TO RESIST SEISMIC AND WIND LOADS IN ACCORDANCE WITH THE 2010 CALIFORNIA BUILDING CODE AND ASCE 7-05-MINIMUM DESIGN LOADS FOR BUILDINGS AND OTHER STRUCTURES.

carollo

REGISTERED PROFESSIONAL ENGINEER KARL W. HADDEN No. 56584 CIVIL STATE OF CALIFORNIA

9/16/2013

JOB NO. 8930A.11

DRAWING NO. 00G01

1 OF 549

Plot Date: 20-SEP-2013 3:53:07 PM

User: NGriffith

Model: Layout1 ColorTable: gshade.ctb DesignScript: Carollo_Std_Pen_v0905.pen PlotScale: 1:1

LAST SAVED BY: ddonk

PROJECT NO. 8930A.11 FILE NAME: 8930A11-00G01.dgn

SHT NO.	DWG NO.	DESCRIPTION
		GENERAL
1	00G01	COVER SHEET
2	00G02	DRAWING INDEX I
3	00G03	DRAWING INDEX II
4	00G04	DESIGN CRITERIA
5	00G05	ABBREVIATIONS
6	00G06	PIPING SYMBOLS AND GENERAL NOTES
7	00G07	PLANT FLOW SCHEMATIC
8	00G08	HYDRAULIC PROFILE
9	00G09	OVERALL SITE PLAN
10	00G10	STRUCTURAL GENERAL NOTES
11	00G11	STRUCTURAL TYPICAL SECTIONS
12	00G12	EQUIPMENT SCHEDULE
13	00G13	STAGING PLAN AND AGENCY CONTACT INFORMATION
		CIVIL
14	01C01	KEY MAP AND GENERAL NOTES
15	01C02	PAVING AND GRADING - AREA "A"
16	01C03	PAVING AND GRADING - AREA "B"
17	01C04	PAVING AND GRADING - AREA "C"
18	01C05	PAVING AND GRADING - AREA "D"
19	01C06	YARD PIPING PLAN - AREA "A"
20	01C07	YARD PIPING PLAN - AREA "B"
21	01C08	YARD PIPING PLAN - AREA "C"
22	01C09	YARD PIPING PLAN - AREA "D"
23	01C10	PLANT ENTRANCE ROAD - PLAN & PROFILE STA. 1+00.00 TO STA. 7+00.00
24	01C11	PLANT ENTRANCE ROAD - PLAN & PROFILE STA. 7+00.00 TO STA. 14+00.00
25	01C12	PLANT ENTRANCE ROAD - PLAN & PROFILE STA. 14+00.00 TO STA. 20+07.64
26	01C13	LOS OSOS VALLEY ROAD IMPROVEMENTS - I
27	01C14	LOS OSOS VALLEY ROAD IMPROVEMENTS - II
28	01C15	YARD PIPING PARTIAL PLANS
29	01C16	FILL PLACEMENT IN DRAINAGE DITCHES PLAN AND SECTION
30	01C17	SANITARY SEWER & PLANT DRAIN SITE PIPING SCHEMATIC
31	01C18	MANHOLE PIPE ORIENTATION DETAILS
32	01C19	30" STORM DRAIN PROFILE
33	01C20	PAVING AND GRADING - COORDINATE CONTROL DATA - I
34	01C21	PAVING AND GRADING - COORDINATE CONTROL DATA - II
35	01C22	PROFILES B, C, D
36	01C23	PROFILES E, F, H
37	01C24	PROFILES G, I
38	01C25	PROFILES J, K, L, M, N, O
39	01C26	PROFILES P, Q, V
40	01C27	PROFILES R, S, T, U
41	02C01	REW POND SECTIONS
42	02C02	STORM WATER POND AND MISCELLANEOUS SECTIONS
43	02C03	REW AND STORM WATER POND DETAILS - I
44	02C04	REW AND STORM WATER POND DETAILS - II
45	02C05	REW POND STRUCTURES DIVIDER WALL - PLAN, SECTIONS & DETAIL
46	02C06	REW POND STRUCTURES POND 1 INLET STRUCTURE - PLANS, SECTIONS & DETAILS
47	02C07	REW POND STRUCTURES POND 1 OUTLET STRUCTURE - PLANS, SECTIONS & DETAILS
48	02C08	REW POND STRUCTURES POND 2 INLET STRUCTURE - PLANS, SECTIONS & DETAILS
49	02C09	REW POND STRUCTURES POND 2 OUTLET STRUCTURE - PLANS & SECTIONS
50	03C01	WATER SUPPLY WELLS
51	03C02	WATER SUPPLY WELL PUMPS
52	03C03	ENTRANCE GATES PLANS AND ELEVATIONS
53	03C04	ENTRANCE GATES SECTIONS AND DETAILS
54	03C05	ROAD SECTION YARD DETAILS
55	03C06	RETAINING WALL PROFILES & SECTION
56	03C07	MISCELLANEOUS CIVIL DETAILS
57	03C08	PLANT SECTIONS
		ARCHITECTURAL AND LANDSCAPING INCLUDING BUILDING STRUCTURAL, MECHANICAL, AND ELECTRICAL
58	05AA00	ARCH - ADMINISTRATION BUILDING RENDERING
59	05AA01	ARCH - ADMINISTRATION BUILDING FLOOR PLAN
60	05AA02	ARCH - ADMINISTRATION BUILDING CLERESTORY PLAN
61	05AA03	ARCH - ADMINISTRATION BUILDING REFLECTED CEILING PLAN
62	05AA04	ARCH - ADMINISTRATION BUILDING ROOF PLAN / BUILDING SECTIONS
63	05AA05	ARCH - ADMINISTRATION BUILDING ROOF PLAN / BUILDING SECTIONS
64	05AA06	ARCH - ADMINISTRATION BUILDING CABINET ELEVATIONS
65	05AA07	ARCH - ADMINISTRATION BUILDING EXTERIOR ELEVATIONS
66	05AA08	ARCH - ADMINISTRATION BUILDING EXTERIOR ELEVATIONS
67	05AA09	ARCH - ADMINISTRATION BUILDING SCHEDULES
68	05AA10	ARCH - ADMINISTRATION BUILDING SCHEDULES
69	05AA11	ARCH - ADMINISTRATION BUILDING ACCESSIBILITY NOTES AND DETAILS
70	05AA12	ARCH - ADMINISTRATION BUILDING ALUMINUM FRAME TYPES/DETAILS
71	05AA13	ARCH - ADMINISTRATION BUILDING ARCHITECTURAL DETAILS
72	05AA14	ARCH - ADMINISTRATION BUILDING ROOF DETAILS
73	05AA15	ARCH - ADMINISTRATION BUILDING FLATWORK PLAN
74	05AS01	STRUCT - ADMINISTRATION BUILDING GENERAL STRUCTURAL NOTES
75	05AS02	STRUCT - ADMINISTRATION BUILDING GENERAL STRUCTURAL NOTES
76	05AS03	STRUCT - ADMINISTRATION BUILDING FOUNDATION PLAN
77	05AS04	STRUCT - ADMINISTRATION BUILDING ROOF FRAMING PLAN
78	05AS05	STRUCT - ADMINISTRATION BUILDING UPPER ROOF FRAMING PLAN
79	05AS06	STRUCT - ADMINISTRATION BUILDING STRUCTURAL DETAILS
80	05AS07	STRUCT - ADMINISTRATION BUILDING STRUCTURAL DETAILS
81	05AS08	STRUCT - ADMINISTRATION BUILDING STRUCTURAL DETAILS
82	05AS09	STRUCT - ADMINISTRATION BUILDING STRUCTURAL DETAILS
83	05AS10	STRUCT - ADMINISTRATION BUILDING STRUCTURAL DETAILS
84	05AP01	PLUMB - ADMINISTRATION & MAINTENANCE BUILDING SCHEDULES, LEGEND & NOTES
85	05AP02	PLUMB - ADMINISTRATION & MAINTENANCE BUILDING DETAILS
86	05AP03	PLUMB - ADMINISTRATION & MAINTENANCE BUILDING DETAILS
87	05AP04	PLUMB - ADMINISTRATION BUILDING FLOOR PLAN-WASTE & VENT
88	05AP05	PLUMB - ADMINISTRATION BUILDING FLOOR PLAN-WATER & GAS
89	05AM01	MECH - SCHEDULES, LEGEND & NOTES
90	05AM02	MECH - DETAILS
91	05AM03	MECH - DETAILS
92	05AM04	MECH - ADMINISTRATION BUILDING FLOOR PLAN
93	05AM05	MECH - ADMINISTRATION BUILDING ROOF PLAN
94	05AE01	ELEC - ADMINISTRATION BUILDING GENERAL NOTES, LEGEND AND ABBREVIATIONS
95	05AE02	ELEC - ADMINISTRATION BUILDING SINGLE LINE DIAGRAM
96	05AE03	ELEC - ADMINISTRATION BUILDING LIGHTING FLOOR PLAN
97	05AE04	ELEC - ADMINISTRATION BUILDING POWER/COMMUNICATIONS FLOOR PLAN
98	05AE05	ELEC - ADMINISTRATION BUILDING ELECTRICAL DETAILS
99	05AE06	ELEC - ADMINISTRATION BUILDING ELECTRICAL SCHEDULES
100	05AE07	ELEC - ADMINISTRATION BUILDING INTERIOR TITLE 24 COMPLIANCE FORMS
101	05AE08	ELEC - ADMINISTRATION BUILDING EXTERIOR TITLE 24 COMPLIANCE FORMS
102	06AA00	ARCH - MAINTENANCE BUILDING RENDERING
103	06AA01	ARCH - MAINTENANCE BUILDING FLOOR PLAN
104	06AA02	ARCH - MAINTENANCE BUILDING CLERESTORY PLAN
105	06AA03	ARCH - MAINTENANCE BUILDING ROOF PLAN
106	06AA04	ARCH - MAINTENANCE BUILDING REFLECTED CEILING PLAN
107	06AA05	ARCH - MAINTENANCE BUILDING - BUILDING SECTIONS
108	06AA06	ARCH - MAINTENANCE BUILDING EXTERIOR ELEVATIONS
109	06AA07	ARCH - MAINTENANCE BUILDING ROOF DETAILS
110	06AA08	ARCH - MAINTENANCE BUILDING ARCHITECTURAL DETAILS
111	06AS01	STRUCT - MAINTENANCE BUILDING GENERAL STRUCTURAL NOTES
112	06AS02	STRUCT - MAINTENANCE BUILDING GENERAL STRUCTURAL NOTES
113	06AS03	STRUCT - MAINTENANCE BUILDING FOUNDATION PLAN
114	06AS04	STRUCT - MAINTENANCE BUILDING FLOOR AND LOWER ROOF FRAMING PLAN
115	06AS05	STRUCT - MAINTENANCE BUILDING STRUCTURAL DETAILS
116	06AS06	STRUCT - MAINTENANCE BUILDING STRUCTURAL DETAILS
117	06AP01	PLUMB - MAINTENANCE BUILDING FLOOR PLAN
118	06AM01	MECH - MAINTENANCE BUILDING FLOOR PLAN
119	06AE01	ELEC - MAINTENANCE BUILDING GENERAL NOTES, LEGEND AND ABBREVIATIONS
120	06AE02	ELEC - MAINTENANCE BUILDING SINGLE LINE DIAGRAM
121	06AE03	ELEC - MAINTENANCE BUILDING LIGHTING FLOOR PLAN
122	06AE04	ELEC - MAINTENANCE BUILDING POWER/COMMUNICATIONS FLOOR PLAN
123	06AE05	ELEC - MAINTENANCE BUILDING ELECTRICAL DETAILS
124	06AE06	ELEC - MAINTENANCE BUILDING ELECTRICAL SCHEDULES
125	06AE07	ELEC - MAINTENANCE BUILDING INTERIOR TITLE 24 COMPLIANCE FORMS
126	06AE08	ELEC - MAINTENANCE BUILDING EXTERIOR TITLE 24 COMPLIANCE FORMS
127	51AA00	ARCH - DEWATERING BUILDING RENDERING
128	51AA01	ARCH - DEWATERING BUILDING FLOOR PLAN
129	51AA02	ARCH - DEWATERING BUILDING CLERESTORY PLAN
130	51AA04	ARCH - DEWATERING BUILDING ROOF PLAN / BUILDING SECTION
131	51AA05	ARCH - DEWATERING BUILDING EXTERIOR ELEVATIONS
132	51AA06	ARCH - DEWATERING BUILDING ROOF DETAILS
133	51AA07	ARCH - DEWATERING BUILDING ROOF DETAILS
134	70AA00	ARCH - ELECTRICAL BUILDING RENDERING
135	70AA01	ARCH - ELECTRICAL BUILDING FLOOR PLAN
136	70AA03	ARCH - ELECTRICAL BUILDING ROOF PLAN / BUILDING SECTION
137	70AA04	ARCH - ELECTRICAL BUILDING EXTERIOR ELEVATIONS
138	70AA05	ARCH - ELECTRICAL BUILDING ROOF DETAILS
139	70AA06	ARCH - ELECTRICAL BUILDING WALL DETAILS
140	80AA01	ARCH - GENERAL SITE ENTRANCE SIGN DETAILS
141	80AA02	ARCH - GENERAL SITE - SITE DETAILS
142	80AL01	LAND - GENERAL SITE PLANTING PLAN
143	80AL02	LAND - GENERAL SITE IRRIGATION PLAN
144	80AL03	LAND - GENERAL SITE IRRIGATION DETAILS
145	80AL04	LAND - GENERAL SITE SPECIFICATIONS
		FIRE PROTECTION
146	05AF00	FIRE - SITE PLAN & GENERAL NOTES
147	05AF01	FIRE - ADMINISTRATION BUILDING FIRE SPRINKLER SYSTEM PLAN
148	05AF02	FIRE - ADMINISTRATION BUILDING - BUILDING SECTIONS AND RISER DETAIL
149	05AF03	FIRE - TYPICAL WOOD DETAILS
150	06AF01	FIRE - MAINTENANCE BUILDING FIRE SPRINKLER SYSTEM PLAN
151	06FA02	FIRE - MAINTENANCE BUILDING - BUILDING SECTIONS AND RISER DETAIL
152	06FA03	FIRE - TYPICAL METAL DETAILS
153	32AF01	FIRE - CHEMICAL FACILITY – FIRE SPRINKLER SYSTEM PLAN
154	32AF02	FIRE - CHEMICAL FACILITY – BUILDING SECTIONS & RISER DETAIL
155	51AF01	FIRE - DEWATERING BUILDING – FIRE SPRINKLER SYSTEM PLAN
156	51AF02	FIRE - DEWATERING BUILDING – BUILDING SECTIONS & RISER DETAIL
157	70AF01	FIRE - ELECTRICAL BUILDING – FIRE SPRINKLER SYSTEM PLAN
158	70AF02	FIRE - ELECTRICAL BUILDING– BUILDING SECTIONS & RISER DETAIL
		PLANT STRUCTURAL
159	03S01	ENTRANCE SIGN DETAILS
160	04S01	PLANT DRAIN PUMP STATION PLANS, SECTIONS, AND DETAILS
161	04S02	STORM WATER PUMP STATION PLANS, SECTIONS, AND DETAILS
162	10S01	HEADWORKS BOTTOM PLAN
163	10S02	HEADWORKS TOP PLAN
164	10S03	HEADWORKS SECTIONS AND DETAILS
165	10S04	HEADWORKS SECTIONS AND DETAILS
166	10S05	HEADWORKS SECTIONS & DETAILS
167	11S01	ODOR CONTROL FACILITY PLAN AND SECTION
168	20S01	OXIDATION DITCH BOTTOM PLAN
169	20S02	OXIDATION DITCH TOP PLAN
170	20S03	OXIDATION DITCH SECTIONS
171	20S04	OXIDATION DITCH SECTIONS
172	20S05	OXIDATION DITCH SECTIONS
173	20S06	OXIDATION DITCH SECTIONS AND DETAILS
174	20S07	OXIDATION DITCH DETAILS
175	20S08	OXIDATION DITCH DETAILS
176	20S09	OXIDATION DITCH DETAILS
177	20S10	OXIDATION DITCH DETAILS
178	21S01	SECONDARY CLARIFIERS NO. 1 & NO. 2 PLANS
179	21S02	SECONDARY CLARIFIERS NO. 1 & NO. 2 SECTIONS & DETAILS
180	21S03	SECONDARY CLARIFIERS NO. 1 & NO. 2 SECTION & DETAILS
181	21S04	SECONDARY CLARIFIERS NO. 1 & NO. 2 SECTION & DETAIL
182	23S01	SCUM PUMP STATION PLANS AND SECTIONS
183	28S01	FILTER INFLUENT PUMP STATION PLANS
184	28S02	FILTER INFLUENT PUMP STATION SECTIONS & DETAIL
185	30S01	TERTIARY FILTERS PLANS
186	30S02	TERTIARY FILTERS ROOF FRAMING PLAN, SECTIONS & DETAILS
187	30S03	TERTIARY FILTERS SECTIONS & DETAIL
188	31S01	UV FACILITY BOTTOM PLAN
189	31S02	UV FACILITY TOP PLAN
190	31S03	UV FACILITY ROOF FRAMING PLAN, SECTIONS & DETAIL
191	31S04	UV FACILITY SECTIONS & DETAIL
192	31S05	UV FACILITY DETAILS
193	31S06	UV FACILITY SECTION & DETAILS
194	32S01	CHEMICAL FACILITY PLANS & SECTION
195	32S02	CHEMICAL FACILITY SECTIONS AND DETAILS
196	40S01	EFFLUENT PUMP STATION PLANS AND DETAILS
197	40S02	EFFLUENT PUMP STATION SECTIONS
198	50S01	SLUDGE STORAGE TANKS BOTTOM PLAN
199	50S02	SLUDGE STORAGE TANKS TOP PLAN & DETAILS
200	50S03	SLUDGE STORAGE TANKS SECTIONS
201	50S04	SLUDGE STORAGE TANKS SECTIONS & DETAILS
202	50S05	SLUDGE STORAGE TANKS SECTIONS & DETAILS
203	51S01	DEWATERING BUILDING BOTTOM PLAN & DETAILS
204	51S02	DEWATERING BUILDING FLOOR/FOUNDATION PLAN
205	51S03	DEWATERING BUILDING INTERMEDIATE FRAMING PLAN
206	51S04	DEWATERING BUILDING ROOF FRAMING PLAN
207	51S05	DEWATERING BUILDING SECTIONS & DETAIL
208	51S06	DEWATERING BUILDING SECTIONS & DETAILS
209	51S07	DEWATERING BUILDING SECTIONS
210	51S08	DEWATERING BUILDING SECTIONS & DETAILS
211	51S09	DEWATERING BUILDING SECTIONS & DETAILS
212	51S10	DEWATERING BUILDING PARTIAL PLAN & SECTION
213	51S11	DEWATERING BUILDING SECTIONS
214	60S01	WATER TANK FOUNDATIONS PLAN AND SECTIONS
215	70S01	ELECTRICAL BUILDING FOUNDATION/FLOOR PLAN
216	70S02	ELECTRICAL BUILDING ROOF FRAMING PLAN
217	70S03	ELECTRICAL BUILDING SECTIONS
218	70S04	ELECTRICAL BUILDING SECTIONS
219	70S05	ELECTRICAL BUILDING SECTIONS
220	70S06	ELECTRICAL BUILDING SECTIONS
221	70S07	ELECTRICAL BUILDING SECTIONS
222	70S08	ELECTRICAL BUILDING DETAILS
		PLANT MECHANICAL
223	04M01	PLANT DRAIN PUMP STATION PLAN AND SECTION
224	04M02	STORM WATER PUMP STATION PLAN AND SECTION
225	10M01	HEADWORKS PLAN
226	10M02	HEADWORKS SECTIONS
227	10M03	HEADWORKS SECTIONS
228	11M01	ODOR CONTROL FACILITY PLAN
229	11M02	ODOR CONTROL FACILITY SECTION
230	20M01	OXIDATION DITCH PLAN
231	20M02	OXIDATION DITCH PARTIAL PLANS
232	20M03	OXIDATION DITCH SECTIONS
233	20M04	OXIDATION DITCH SECTIONS / DETAILS
234	20M05	OXIDATION DITCH SECTIONS / DETAILS
235	21M01	SECONDARY CLARIFIER NO. 1 PLAN
236	21M02	SECONDARY CLARIFIER NO. 1 SECTIONS AND DETAIL
237	21M03	SECONDARY CLARIFIER NO. 1 & 2 PLAN, SECTIONS AND DETAILS
238	21M04	SECONDARY CLARIFIER NO. 1 & 2 SECTIONS AND DETAILS
239	23M01	SCUM PUMP STATION PLAN AND SECTION
240	28M01	FILTER INFLUENT PUMP STATION PLAN
241	28M02	FILTER INFLUENT PUMP STATION SECTIONS
242	28M03	FILTER INFLUENT PUMP STATION SECTION AND DETAIL
243	30M01	TERTIARY FILTERS PLAN
244	30M02	TERTIARY FILTERS SECTIONS
245	31M01	UV DISINFECTION PLAN
246	31M02	UV DISINFECTION SECTIONS
247	32M01	CHEMICAL FACILITY PLAN
248	32M02	CHEMICAL FACILITY VIEWS
249	32M03	CHEMICAL FACILITY SECTIONS
250	32M04	CHEMICAL FACILITY SECTIONS
251	32M05	CHEMICAL FACILITY DETAILS
252	40M01	EFFLUENT PUMP STATION PLAN
253	40M02	EFFLUENT PUMP STATION SECTIONS
254	50M01	SLUDGE STORAGE TANKS PLAN
255	50M02	SLUDGE STORAGE TANKS PARTIAL PLAN
256	50M03	SLUDGE STORAGE TANKS PARTIAL PLAN AND SECTIONS
257	50M04	SLUDGE STORAGE TANKS SECTIONS
258	50M05	SLUDGE STORAGE TANKS SECTIONS
259	51M01	DEWATERING BUILDING FLOOR PLAN
260	51M02	DEWATERING BUILDING DRAINAGE PLAN
261	51M03	DEWATERING BUILDING SECTIONS
262	51M04	DEWATERING BUILDING SECTION
263	51M05	DEWATERING BUILDING DETAILS
264	51M06	DEWATERING BUILDING DETAILS
265	60M01	WATER STORAGE TANKS AND WELL WATER PUMP STATION PLAN
266	60M02	NON-POTABLE WATER STORAGE AND PUMP STATION SECTIONS AND DETAILS
267	60M03	NON-POTABLE WATER STORAGE TANK PLAN AND SECTION
268	70M01	ELECTRICAL BUILDING PLAN
269	70M02	ELECTRICAL BUILDING SECTION
		PLANT HVAC
270	51H01	DEWATERING BUILDING PLAN
271	51H02	DEWATERING BUILDING SECTIONS
272	70H01	ELECTRICAL BUILDING PLAN
273	70H02	ELECTRICAL BUILDING SECTIONS

REV	DATE	BY	DESCRIPTION

DESIGNED HGK
DRAWN GAT
CHECKED KWH
DATE SEPT 2013

REGISTERED PROFESSIONAL ENGINEER — KEVIN GIL KARG — No. 62686 — CIVIL — STATE OF CALIFORNIA — 9/16/2013

carollo

SAN LUIS OBISPO COUNTY

SAN LUIS OBISPO COUNTY

LOS OSOS WATER RECYCLING FACILITY PROJECT

GENERAL

DRAWING INDEX I

VERIFY SCALES
BAR IS ONE INCH ON ORIGINAL DRAWING
0 1"
IF NOT ONE INCH ON THIS SHEET, ADJUST SCALES ACCORDINGLY

JOB NO. 8930A.11
DRAWING NO. 00G02
SHEET NO. OF 549

Plot Date: 25-SEP-2013 1:34:14 PM
User: DDonk
PlotScale: 2:1
DesignScript: Carollo_Std_Pen_v0905.pen
ColorTable: gshade.ctb
Model: Layout1
LAST SAVED BY: djacobs

PROJECT NO. 8930A.11 FILE NAME: 8930A11-00G02.dgn

SHT NO.	DWG NO.	DESCRIPTION
		PLANT ELECTRICAL
274	00E01	LEGEND & SYMBOLS
275	00E02	ABBREVIATIONS
276	00E03	DISCONNECT & HANDHOLE/MANHOLE SCHEDULES
277	00E04	LUMINAIRE SCHEDULE
278	ESC01	OVERALL SITE PLAN
279	ESC02	SITE PLAN - I
280	ESC03	SITE PLAN - II
281	ESC04	PARTIAL SITE PLANS
282	ESC06	DUCTBANK SECTIONS- I
283	ESC07	DUCTBANK SECTIONS- II
284	ESC08	DUCTBANK SECTIONS- III
285	ESC09	DUCTBANK SECTIONS- IV
286	ESC10	DUCTBANK SECTIONS- V
287	ESC11	DUCTBANK SECTIONS- VI
288	ESC12	SITE PLAN CONDUIT SCHEDULE- I
289	ESC13	SITE PLAN CONDUIT SCHEDULE- II
290	ESC14	SITE PLAN CONDUIT SCHEDULE- III
291	ESC15	SITE PLAN CONDUIT SCHEDULE- IV
292	ESC16	SITE PLAN CONDUIT SCHEDULE- V
293	ESC17	SITE PLAN CONDUIT SCHEDULE- VI
294	EOL01	MAIN SWITCHGEAR SWGR-MS ELEVATION
295	EOL02	MAIN SWITCHGEAR SWGR-MS ONE-LINE DIAGRAM
296	EOL03	MCC-C ELEVATION
297	EOL04	MCC-C ONE-LINE DIAGRAM
298	EOL05	MCC-C PANELBOARD SCHEDULE
299	EOL06	MCC-D ELEVATION
300	EOL07	MCC-D ONE-LINE DIAGRAM
301	EOL08	MCC-D PANELBOARD SCHEDULE
302	EOL09	MCC-E ELEVATION
303	EOL10	MCC-E ONE-LINE DIAGRAM
304	EOL11	MCC-E ONE-LINE DIAGRAM
305	EOL12	MCC-F ELEVATION
306	EOL13	MCC-F ONE-LINE DIAGRAM
307	EOL14	MCC-F ONE-LINE DIAGRAM
308	EOL15	MCC-F PANELBOARD SCHEDULE
309	04E01	PLANT DRAIN & STORM DRAIN PUMP STATION PLANS
310	04E02	PLANT DRAIN & STORM DRAIN PUMP STATIONS CONDUIT SCHEDULE- I
311	04E03	PLANT DRAIN & STORM DRAIN PUMP STATIONS CONDUIT SCHEDULE- II
312	10E01	HEADWORKS POWER AND CONTROL PLAN
313	10E02	HEADWORKS LIGHTING, RECEPTACLES, & GROUNDING PLAN
314	10E03	HEADWORKS CONDUIT SCHEDULE-I
315	10E04	HEADWORKS CONDUIT SCHEDULE- II
316	10E05	HEADWORKS CONDUIT SCHEDULE- III
317	10E06	HEADWORKS CONDUIT SCHEDULE- IV
318	11E01	ODOR CONTROL FACILITY PLAN
319	11E02	ODOR CONTROL FACILITY CONDUIT SCHEDULE
320	20E01	OXIDATION DITCH NO.1& NO. 2 PLAN
321	20E02	OXIDATION DITCH NO.1& NO. 2 PLAN
322	20E03	OXIDATION DITCH NO. 1& NO. 2 CONDUIT SCHEDULE- I
323	20E04	OXIDATION DITCH NO. 1& NO. 2 CONDUIT SCHEDULE- II
324	20E05	OXIDATION DITCH NO. 1& NO. 2 CONDUIT SCHEDULE- III
325	21E01	SECONDARY CLARIFIER NO. 1 PLAN
326	21E02	SECONDARY CLARIFIER NO. 2 PLAN
327	21E03	SECONDARY CLARIFIERS CONDUIT SCHEDULE- I
328	21E04	SECONDARY CLARIFIERS CONDUIT SCHEDULE- II
329	23E01	SCUM PUMP STATION PLAN
330	23E02	SCUM PUMP STATION CONDUIT SCHEDULE
331	28E01	FILTER INFLUENT PUMP STATION PLAN
332	28E02	FILTER INFLUENT PUMP STATION CONDUIT SCHEDULE- I
333	28E03	FILTER INFLUENT PUMP STATION CONDUIT SCHEDULE- II
334	30E01	TERTIARY FILTERS LOWER PLAN
335	30E02	TERTIARY FILTERS UPPER PLAN
336	30E03	TERTIARY FILTER CONDUIT SCHEDULE
337	31E01	UV DISINFECTION POWER & CONTROL PLAN
338	31E02	UV DISINFECTION LIGHTING AND RECEPTACLE PLAN
339	31E03	UV DISINFECTION CONDUIT SCHEDULE- I
340	31E04	UV DISINFECTION CONDUIT SCHEDULE- II
341	31E05	UV DISINFECTION CONDUIT SCHEDULE- III
342	32E01	CHEMICAL FACILITY PLAN
343	32E02	CHEMICAL FACILITY LIGHTING & RECEPTACLE PLAN
344	32E03	CHEMICAL FACILITY CONDUIT SCHEDULE- I
345	32E04	CHEMICAL FACILITY CONDUIT SCHEDULE- II
346	32E05	CHEMICAL FACILITY CONDUIT SCHEDULE- III
347	40E01	EFFLUENT PUMP STATION PLAN
348	40E02	EFFLUENT PUMP STATION CONDUIT SCHEDULE- I
349	40E03	EFFLUENT PUMP STATION CONDUIT SCHEDULE-II
350	50E01	SLUDGE STORAGE TANKS POWER & CONTROL PLAN
351	50E02	SLUDGE STORAGE TANKS POWER & CONTROL PARTIAL PLAN
352	50E03	SLUDGE STORAGE TANKS POWER & CONTROL PARTIAL PLAN
353	50E04	SLUDGE STORAGE TANKS LIGHTING & RECEPTACLE PLAN
354	50E05	SLUDGE STORAGE TANKS DETAILS
355	50E06	SLUDGE STORAGE TANKS CONDUIT SCHEDULE- I
356	50E07	SLUDGE STORAGE TANKS CONDUIT SCHEDULE- II
357	50E08	SLUDGE STORAGE TANKS CONDUIT SCHEDULE- III
358	50E09	SLUDGE STORAGE TANKS CONDUIT SCHEDULE- IV
359	50E10	SLUDGE STORAGE TANKS CONDUIT SCHEDULE- V
360	50E11	SLUDGE STORAGE TANKS CONDUIT SCHEDULE- VI
361	50E12	SLUDGE STORAGE TANKS CONDUIT SCHEDULE- VII
362	50E13	SLUDGE STORAGE TANKS CONDUIT SCHEDULE- VIII
363	51E01	DEWATERING BUILDING POWER AND CONTROL PLAN
364	51E02	DEWATERING BUILDING POWER AND CONTROL PLAN
365	51E03	DEWATERING BUILDING HVAC POWER & CONTROL PLAN
366	51E04	DEWATERING BUILDING LIGHTING, RECEPTACLE, & GROUNDING PLAN
367	51E05	DEWATERING FACILITY ELECTRICAL ROOM- UNDERGROUND POWER PLAN
368	51E06	DEWATERING FACILITY ELECTRICAL ROOM- UNDERGROUND CONTROL & SIGNAL PLAN
369	51E07	DEWATERING BUILDING CONDUIT SCHEDULE- I
370	51E08	DEWATERING BUILDING CONDUIT SCHEDULE- II
371	51E09	DEWATERING BUILDING CONDUIT SCHEDULE- III
372	51E10	DEWATERING BUILDING CONDUIT SCHEDULE- IV
373	60E01	POTABLE WATER PUMP STATION POWER & CONTROL PLAN
374	60E02	POTABLE WATER PUMP STATION LIGHTING & GROUNDING PLAN
375	60E03	POTABLE WATER PUMP STATION CONDUIT SCHEDULE- I
376	60E04	POTABLE WATER PUMP STATION CONDUIT SCHEDULE- II
377	60E05	POTABLE WATER PUMP STATION CONDUIT SCHEDULE- III
378	60E06	POTABLE WATER PUMP STATION CONDUIT SCHEDULE- IV
379	70E01	ELECTRICAL BUILDING PLAN
380	70E02	ELECTRICAL BUILDING UNDERGROUND POWER PARTIAL PLAN
381	70E03	ELECTRICAL BUILDING UNDERGROUND CONTROL & SIGNAL PARTIAL PLAN
382	70E04	ELECTRICAL BUILDING ABOVE GROUND PARTIAL PLAN
383	70E05	ELECTRICAL BUILDING LIGHTING, RECEPTACLE, & GROUNDING PLAN
384	70E06	ELECTRICAL BUILDING HVAC PLAN
385	70E07	ELECTRICAL BUILDING CONDUIT SCHEDULE- I
386	70E08	ELECTRICAL BUILDING CONDUIT SCHEDULE- II
387	70E09	ELECTRICAL BUILDING CONDUIT SCHEDULE- III
		PLANT INSTRUMENTATION
388	00N01	SYMBOLS & ABBREVIATIONS - I
389	00N02	SYMBOLS & ABBREVIATIONS - II
390	00N03	SYMBOLS & ABBREVIATIONS - III
391	00N04	SYMBOLS & ABBREVIATIONS - IV
392	00N05	SCHEMATIC SYMBOLS
393	00N06	EQUIPMENT TAGGING SYSTEM
394	00N07	TYPICAL LOOP DIAGRAM
395	00N08	CONTROL SYSTEM BLOCK DIAGRAM
396	00N09	TYPICAL PCM CABINET POWER SCHEMATIC
397	00N10	PLC, NETWORK PANEL, & NETWORK RACK LAYOUTS
398	00N11	CONTROL SCHEMATICS - 1
399	00N12	CONTROL SCHEMATICS - 2
400	00N13	CONTROL SCHEMATICS - 3
401	00N14	CONTROL SCHEMATICS - 4
402	00N15	CONTROL SCHEMATICS - 5
403	00N16	CONTROL SCHEMATICS - 6
404	00N17	CONTROL SCHEMATICS - 7
405	00N18	CONTROL SCHEMATICS - 8
406	00N19	CONTROL SCHEMATICS - 9
407	00N20	CONTROL SCHEMATICS - 10
408	00N21	CONTROL SCHEMATICS - 11
409	00N22	CONTROL SCHEMATICS - 12
410	00N23	CONTROL SCHEMATICS - 13
411	00N24	CONTROL SCHEMATICS - 14
412	03N01	REW POND STRUCTURES
413	04N01	PLANT DRAIN PUMP STATION
414	04N02	STORM WATER PUMP STATION
415	10N01	HEADWORKS INFLUENT
416	10N02	HEADWORKS CHANNEL NO.1
417	10N03	HEADWORKS CHANNEL NO.2
418	10N04	HEADWORKS EFFLUENT
419	11N01	ODOR CONTROL FACILITY - 1
420	11N02	ODOR CONTROL FACILITY - 2
421	20N01	OXIDATION DITCH NO. 1
422	20N02	OXIDATION DITCH NO. 2
423	20N03	OXIDATION DITCH CHEMICAL FEED
424	21N01	SECONDARY CLARIFIER NO. 1
425	21N02	SECONDARY CLARIFIER NO. 2
426	23N01	SCUM PUMP STATION
427	28N01	FILTER INFLUENT PUMP STATION - 1
428	28N02	FILTER INFLUENT PUMP STATION - 2
429	28N03	FILTER INFLUENT PUMP STATION - 3
430	30N01	TERTIARY FILTRATION OVERVIEW
431	30N02	TERTIARY FILTER NO. 1
432	30N03	TERTIARY FILTER NO. 2
433	31N01	UV DISINFECTION CHANNEL NO. 1
434	31N02	UV DISINFECTION CHANNEL NO. 2
435	31N03	UV DISINFECTION CHANNEL NO. 3
436	32N01	ALUMINUM SULFATE STORAGE
437	32N02	ALUMINUM SULFATE FEED - 1
438	32N03	ALUMINUM SULFATE FEED - 2
439	32N04	SODIUM HYPOCHLORITE STORAGE
440	32N05	SODIUM HYPOCHLORITE FEED - 1
441	32N06	SODIUM HYPOCHLORITE FEED - 2
442	32N07	SODIUM HYPOCHLORITE FEED - 3
443	32N08	SODIUM HYPOCHLORITE FEED - 4
444	32N09	SODIUM HYPOCHLORITE FEED - 5
445	32N10	CHEMICAL FACILITY ANCILLARY SYSTEM
446	40N01	EFFLUENT PUMP STATION - 1
447	40N02	EFFLUENT PUMP STATION - 2
448	40N03	EFFLUENT PUMP STATION - 3
449	50N01	RAS WAS PUMPS - 1
450	50N02	RAS WAS PUMPS - 2
451	50N02A	RAS WAS PUMPS - 3
452	50N03	RAS WAS PUMPS - 4
453	50N04	SLUDGE AERATION BLOWER NO. 1
454	50N05	SLUDGE AERATION BLOWER NO. 2
455	50N06	SLUDGE AERATION BLOWER NO. 3
456	50N07	SLUDGE AERATION BLOWER DISCHARGE VALVES
457	50N08	SLUDGE STORAGE TANK NO. 1
458	50N09	SLUDGE STORAGE TANK NO. 2
459	50N10	DEWATERING TRAIN NO. 1
460	50N11	DEWATERING TRAIN NO. 2
461	50N12	DEWATERING FEED PUMPS SEAL WATER
462	50N13	SLUDGE STORAGE SUMP PUMPS
463	51N01	DEWATERING SCREW PRESS NO. 1
464	51N02	DEWATERING SCREW PRESS NO. 2
465	51N03	CAKE CONVEYORS
466	51N04	POLYMER STORAGE
467	51N05	POLYMER BLEND & FEED DEWATERING
468	51N06	POLYMER BLEND & FEED SECONDARY TREATMENT
469	51N07	DEWATERING BUILDING ELECTRICAL ROOM
470	51N08	DEWATERING BUILDING FANS - 1
471	51N09	DEWATERING BUILDING FANS - 2
472	60N01	POTABLE WATER - 1
473	60N02	POTABLE WATER - 2
474	60N03	POTABLE WATER - 3
475	60N04	NON-POTABLE WATER - 1
476	60N05	NON-POTABLE WATER - 2
477	60N06	POTABLE WATER - 4
478	60N07	POTABLE WATER - 5
479	60N08	POTABLE WATER - 6
480	70N01	FIRE WATER PUMP
481	70N02	ELECTRICAL BUILDING
482	70N03	ELECTRICAL BUILDING HVAC
483	70N04	STANDBY GENERATOR
		TYPICAL DETAILS
484	AT01	ARCHITECTURAL TYPICAL DETAILS
485	AT02	ARCHITECTURAL TYPICAL DETAILS
486	AT03	ARCHITECTURAL TYPICAL DETAILS
487	AT04	ARCHITECTURAL TYPICAL DETAILS
488	AT05	ARCHITECTURAL TYPICAL DETAILS
489	AT06	ARCHITECTURAL TYPICAL DETAILS
490	AT07	ARCHITECTURAL TYPICAL DETAILS
491	AT08	ARCHITECTURAL TYPICAL DETAILS
492	AT09	ARCHITECTURAL TYPICAL DETAILS
493	CT01	CIVIL TYPICAL DETAILS
494	CT02	CIVIL TYPICAL DETAILS
495	CT03	CIVIL TYPICAL DETAILS
496	DT01	CORROSION TYPICAL DETAILS
497	DT02	CORROSION TYPICAL DETAILS
498	ET01	ELECTRICAL TYPICAL DETAILS
499	ET02	ELECTRICAL TYPICAL DETAILS
500	ET03	ELECTRICAL TYPICAL DETAILS
501	ET04	ELECTRICAL TYPICAL DETAILS
502	ET05	ELECTRICAL TYPICAL DETAILS
503	ET06	ELECTRICAL TYPICAL DETAILS
504	ET07	ELECTRICAL TYPICAL DETAILS
505	ET08	ELECTRICAL TYPICAL DETAILS
506	ET09	ELECTRICAL TYPICAL DETAILS
507	ET10	ELECTRICAL TYPICAL DETAILS
508	ET11	ELECTRICAL TYPICAL DETAILS
509	ET12	ELECTRICAL TYPICAL DETAILS
510	ET13	ELECTRICAL TYPICAL DETAILS
511	ET14	ELECTRICAL TYPICAL DETAILS
512	ET15	ELECTRICAL TYPICAL DETAILS
513	ET16	ELECTRICAL TYPICAL DETAILS
514	ET17	ELECTRICAL TYPICAL DETAILS
515	ET18	ELECTRICAL TYPICAL DETAILS
516	ET19	ELECTRICAL TYPICAL DETAILS
517	FHT01	FOUNDATION - HVAC TYPICAL DETAILS
518	MT01	MECHANICAL TYPICAL DETAILS
519	MT02	MECHANICAL TYPICAL DETAILS
520	MT03	MECHANICAL TYPICAL DETAILS
521	MT04	MECHANICAL TYPICAL DETAILS
522	NT01	INSTRUMENTATION TYPICAL DETAILS
523	NT02	INSTRUMENTATION TYPICAL DETAILS
524	NT03	INSTRUMENTATION TYPICAL DETAILS
525	NT04	INSTRUMENTATION TYPICAL DETAILS
526	NT06	INSTRUMENTATION TYPICAL DETAILS
527	PT01	PIPING TYPICAL DETAILS
528	PT02	PIPING TYPICAL DETAILS
529	PT03	PIPING TYPICAL DETAILS
530	PT04	PIPING TYPICAL DETAILS
531	PT05	PIPING TYPICAL DETAILS
532	PT06	PIPING TYPICAL DETAILS
533	PT07	PIPING TYPICAL DETAILS
534	PT08	PIPING TYPICAL DETAILS
535	PT09	PIPING TYPICAL DETAILS
536	PT10	PIPING TYPICAL DETAILS
537	ST01	STRUCTURAL TYPICAL DETAILS
538	ST01	STRUCTURAL TYPICAL DETAILS
539	ST03	STRUCTURAL TYPICAL DETAILS
540	ST04	STRUCTURAL TYPICAL DETAILS
541	ST05	STRUCTURAL TYPICAL DETAILS
542	ST06	STRUCTURAL TYPICAL DETAILS
543	ST07	STRUCTURAL TYPICAL DETAILS
544	ST08	STRUCTURAL TYPICAL DETAILS
545	ST09	STRUCTURAL TYPICAL DETAILS
546	ST10	STRUCTURAL TYPICAL DETAILS
547	ST11	STRUCTURAL TYPICAL DETAILS
548	ST12	STRUCTURAL TYPICAL DETAILS
549	ST13	STRUCTURAL TYPICAL DETAILS

REV	DATE	BY	DESCRIPTION

DESIGNED HGK
DRAWN GAT
CHECKED KWH
DATE SEPT 2013

REGISTERED PROFESSIONAL ENGINEER — KEVIN GIL KARG — No. 62686 — CIVIL — STATE OF CALIFORNIA — 9/16/2013

carollo

SAN LUIS OBISPO COUNTY

SAN LUIS OBISPO COUNTY
LOS OSOS WATER RECYCLING FACILITY PROJECT
GENERAL
DRAWING INDEX II

VERIFY SCALES
BAR IS ONE INCH ON ORIGINAL DRAWING
0 1"
IF NOT ONE INCH ON THIS SHEET, ADJUST SCALES ACCORDINGLY

JOB NO. 8930A.11
DRAWING NO. 00G03
SHEET NO. OF 549

PROJECT NO. 8930A.11 FILE NAME: 8930A11-00G03.dgn

Plot Date: 17-SEP-2013 10:46:47 AM
User: DDonk
PlotScale: 2:1
DesignScript: Carollo_Std_Pen_v0905.pen
ColorTable: gshade.ctb
Model: Layout1
LAST SAVED BY: djacobs

DESIGN CRITERIA	UNITS	VALUE
INFLUENT FLOWS		
ANNUAL AVERAGE (AA)	MGD	1.19
AVERAGE DRY WEATHER FLOW (ADWF)	MGD	1.11
AVERAGE DAY MAXIMUM MONTH FLOW (ADMMF)	MGD	1.41
PEAK HOUR FLOW IN COLLECTION SYSTEM	MGD	2.54
INFLUENT FLOWS PUMPED FROM MIDTOWN PUMP STATION		
ONE PUMP FLOW (DRY WEATHER FLOW)	MGD	2.00
TWO PUMP FLOW (NOTE 1)	MGD	3.67
THREE PUMP FLOW	MGD	4.75
LOADING AT ADWF		
BOD_5, MAXIMUM MONTH	PPD	4,000
SUSPENDED SOLIDS, MAXIMUM MONTH	PPD	3,500
AMMONIA NITROGEN, MAXIMUM MONTH	mg/L	56
HEADWORKS		
TYPE OF MECHANICAL BAR SCREENS	-	MECHANICAL FINE SCREEN
NUMBER OF MECHANICAL BAR SCREENS (DUTY/STANDBY)	-	2 (1/1)
MAXIMUM SOLIDS PASSAGE	INCH	0.25
TYPE OF SCREENINGS COMPACTORS	-	COMPACTOR WITH SHAFTED AUGER AND SPRAYERS
NUMBER OF SCREENINGS COMPACTORS (DUTY/STANDBY)	-	2 (1/1)
ODOR CONTROL		
TECHNOLOGY	-	MODULAR BIOFILTER
NUMBER OF STAGES	-	2
NUMBER OF UNITS (DUTY/STANDBY)	-	2 (1/1)
EMPTY BED RESIDENCE TIME - 1ST STAGE	SEC	15
EMPTY BED RESIDENCE TIME - 2ND STAGE	SEC	30
NUMBER OF FANS (DUTY/STANDBY)	-	2 (1/1)
OXIDATION DITCH		
NUMBER	-	2
TYPE	-	MECHANICAL AERATORS
SIDE WATER DEPTH	FT	12
BASIN VOLUME (PER BASIN)	MG	1.08
ANOXIC ZONE VOLUME (PER BASIN)	MG	0.22
AEROBIC ZONE VOLUME (PER BASIN)	MG	0.86
TOTAL VOLUME	MG	2.15
HYDRAULIC RESIDENCE TIME (HRT) @ ADMMF WITH RECYCLE STREAM	HRS	31.6
OPERATING MLSS @ ADMMF	mg/L	3,400
ORGANIC LOADING @ ADMMF (BOD_5@ADMMF/1,000 CF) WITH RECYCLE STREAM	PPD	20
TOTAL SOLIDS RESIDENCE TIME (SRT) @ ADMMF	DAYS	20.5
AEROBIC SOLIDS RESIDENCE TIME (SRT) @ ADMMF	DAYS	16.4
OXIDATION DITCH EQUIPMENT		
ANOXIC MIXERS		
NUMBER EACH DITCH	-	1
TYPE	-	TURBINE
DRIVE MOTOR	HP	5
DRIVE TYPE	-	CONSTANT SPEED
AERATORS		
TYPE	-	SURFACE
NUMBER EACH DITCH	-	2
DRIVE MOTOR	HP	75
DRIVE TYPE	-	VFD
SECONDARY CLARIFIERS		
SLUDGE REMOVAL MECHANISM TYPE	-	SPIRAL TYPE
NUMBER	-	2
DIAMETER	FT	60
SIDE WATER DEPTH	FT	14
SURFACE AREA, EACH	SF	2,830
TOTAL SURFACE AREA	SF	5,650
TOTAL VOLUME	MG	0.59
SURFACE OVERFLOW RATE (SOR) @ ADMMF	GPD/SF	332
RAS/WAS PUMP STATION		
NUMBER OF RAS/WAS PUMPS (DUTY/STANDBY)	-	3 (2/1)
TYPE OF PUMP	-	CENTRIFUGAL
FLOW, EACH	GPM	320 - 550
TOTAL OPERATING FLOW	GPM	1,100
DRIVE TYPE	-	VFD
WAS VOLUME PER WEEK @ ADMMF	GALLONS	377,000

DESIGN CRITERIA	UNITS	VALUE
FILTER INFLUENT PUMP STATION		
TYPE OF PUMP	-	SUBMERSIBLE
NUMBER OF PUMPS - HIGH FLOW	-	2
NUMBER OF PUMPS - LOW FLOW	-	2
FLOW, EACH HIGH FLOW PUMP	GPM	1,400
FLOW, EACH LOW FLOW PUMP	GPM	700
TOTAL CAPACITY, WITH 1 LARGE UNIT OOS	GPM	2,800
DRIVE TYPE	-	VFD
FILTER PRETREATMENT		
TYPE	-	JET MIXING
NUMBER OF PUMPS (DUTY/STANDBY)	-	2 (1/1)
PUMP FLOW, EACH	GPM	78
TERTIARY FILTRATION		
TYPE OF FILTER	-	CLOTH DISK
NUMBER OF FILTERS (DUTY/STANDBY)	-	2 (1/1)
SURFACE AREA, EACH DISK	SF	53.8
TOTAL SURFACE AREA	SF	538
FILTER LOADING RATE @ ADMMF W/ RECYCLE	GPM/SF	2.6
FILTER LOADING RATE @ PDMMF W/ RECYCLE	GPM/SF	3.5
FILTER LOADING RATE @ PHWWF W/ RECYCLE	GPM/SF	5.2
BACKWASH FLOW, PERCENT OF AVERAGE FLOW	%	< 3%
UV DISINFECTION		
TYPE OF UV SYSTEM	-	OPEN CHANNEL
LAMP TYPE		LOW PRESSURE, HIGH
NUMBER OF TRAINS (DUTY/STANDBY)	-	3 (2/1)
LAMP ORIENTATION		HORIZONTAL
BANKS PER TRAIN	-	3
MINIMUM UV TRANSMISSION	%	65
MIN DOSAGE @ PDWWF W/ RECYCLE	mJ/cm^2	120
MIN DOSAGE @ PHWWF W/ RECYCLE	mJ/cm^2	100
REW STORAGE PONDS		
NUMBER OF PONDS	-	2
TOTAL STORAGE CAPACITY	AF	37
SIDE SLOPE	-	2:1
MAX SIDE WATER DEPTH	FT	13
POND FLOOR AND SIDE LINING MATERIAL	-	HDPE
EFFLUENT PUMP STATION		
TYPE OF PUMP	-	VERTICAL TURBINE
NUMBER OF PUMPS (DUTY/STANDBY)	-	4 (3/1)
FLOW, EACH	GPM	850
DRIVE TYPE	-	RVSS
CAPACITY WITH 1 UNIT OOS	GPM	2,550
HYDRONEUMATIC TANK		
NUMBER OF TANKS	-	1
CAPACITY, EACH	GALLONS	12,000
TANK PRESSURE (PRECHARGE)	PSIG	105
SLUDGE STORAGE TANKS		
NUMBER OF TANKS	-	2
VOLUME, EACH	GAL	126,000
DETENTION TIME, TOTAL	DAYS	4
MIXING TYPE	-	AERATED MIXING
DIFFUSER TYPE	-	SHEAR TUBE COARSE BUBBLE DIFFUSERS
AERATION BLOWERS		
TYPE OF BLOWER	-	POSITIVE DISPLACEMENT
NUMBER OF BLOWERS (DUTY/STANDBY)	-	3 (2/1)
CAPACITY, EACH	SCFM	600
DEWATERING FEED PUMPS		
TYPE OF PUMPS	-	PROGRESSIVE CAVITY
NUMBER OF PUMPS (DUTY/STANDBY)		2 (1/1)
FLOW, EACH	GPM	110
DRIVE TYPE	-	VFD

DESIGN CRITERIA	UNITS	VALUE
DEWATERING		
TYPE	-	SCREW PRESS
NUMBER OF PRESSES	-	2
SOLIDS LOADING	LBS/HR	360
OPERATING CYCLE	HR/WK	66
MINIMUM SOLIDS CAPTURE	%	90
MINIMUM SOLIDS CONCENTRATION	%	15
CAKE WEIGHT (DRY TONS/WEEK @ AA)	TONS	10.6
CAKE CONVEYANCE	-	SHAFTLESS SCREW
NUMBER OF CONVEYORS	-	2
PLANT DRAIN PUMP STATION		
TYPE OF PUMP	-	NON-CLOG SUBMERSIBLE
NUMBER OF PUMPS (DUTY/STANDBY)	-	2 (1/1)
FLOW, EACH	GPM	500
DRIVE TYPE	-	VFD
POTABLE AND NON-POTABLE WATER SYSTEM		
SUPPLY WELL PUMPS		
NUMBER OF PUMPS	-	2
WATER TREATMENT	-	FE-MN PRESSURE FILTER
NON-POTABLE WATER STORAGE TANK AND PRESSURIZATION PUMPS		
TYPE	-	ABOVE-GROUND WELDED STEEL TANK
SERVICE	-	FIRE WATER AND NON-POTABLE/PROCESS
NUMBER OF TANKS	-	1
WORKING VOLUME	GAL	115,000
DIAMETER, NOMINAL	FT	35
HEIGHT, NOMINAL	FT	20
NUMBER OF PUMPS	-	3
FLOW CAPACITY, EACH PUMP	GPM	30
FIRE PUMP		
TYPE OF PUMP	-	SPLIT-CASE CENTRIFUGAL
NUMBER OF PUMPS	-	1
FLOW CAPACITY, EACH PUMP	GPM	750
DRIVE TYPE	-	CONSTANT SPEED MOTOR
POTABLE WATER STORAGE TANK AND PRESSURIZATION PUMPS		
NUMBER OF TANKS	-	1
WORKING VOLUME	GAL	1,000
NUMBER OF PUMPS	-	3
FLOW CAPACITY, EACH PUMP	GPM	30
CHEMICAL SYSTEMS		
COAGULANT: ALUMINUM SULFATE OR POLYALUMINUM CHLORIDE		
NUMBER OF TOTES INSTALLED	-	1
TOTE CAPACITY, EACH	GAL	300
STORAGE TIME @ BUILDOUT ADWF	DAYS	31
NUMBER OF PUMPS (DUTY/STANDBY)	-	2 (1/1)
SODIUM HYPOCHLORITE		
NUMBER OF TANKS	-	1
TANK CAPACITY, TOTAL	GAL	2,900
STORAGE TIME @ BUILDOUT ADWF	DAYS	21
NUMBER OF PUMPS FOR EFFLUENT PUMP STATION, OXI & SCUM PIT (DUTY/STANDBY)	-	3 (2/1)
NUMBER OF PUMPS FOR WATER STORAGE TANKS & CLARIFIERS (DUTY/STANDBY)	-	2 (1/1)
STORM WATER RETENTION POND		
NUMBER OF PONDS	-	1
WORKING VOLUME	GAL	380K
SIDE SLOPE	-	2:1
MAX SIDE WATER DEPTH	FT	10
POND FLOOR MATERIAL	-	CONCRETE
POND SIDE LINING MATERIAL	-	HDPE
STORM WATER PUMP STATION		
TYPE OF PUMP	-	NON-CLOG SUBMERSIBLE
NUMBER OF PUMPS (DUTY/STANDBY)	-	2 (1/1)
FLOW, EACH	GPM	150
DRIVE TYPE	-	CONSTANT SPEED
STANDBY GENERATOR		
NUMBER OF UNITS	-	1
TYPE	-	DIESEL-FUELED ENGINE
CAPACITY	KW	1,500

NOTES

1. PEAK DESIGN FLOW FOR LOWRF IS BASED ON OPERATING TWO PUMPS SIMULTANEOUSLY AT MID-TOWN PUMP STATION.

REV	DATE	BY	DESCRIPTION

DESIGNED HGK | DRAWN GAT | CHECKED KWH | DATE SEPT 2013

REGISTERED PROFESSIONAL ENGINEER — BRIAN GIL KAMMER — No. 62686 — CIVIL — STATE OF CALIFORNIA — 9/16/2013

carollo

SAN LUIS OBISPO COUNTY

SAN LUIS OBISPO COUNTY

LOS OSOS WATER RECYCLING FACILITY PROJECT

GENERAL

DESIGN CRITERIA

VERIFY SCALES — BAR IS ONE INCH ON ORIGINAL DRAWING (0 — 1") — IF NOT ONE INCH ON THIS SHEET, ADJUST SCALES ACCORDINGLY

JOB NO. 8930A.11

DRAWING NO. 00G04

SHEET NO. OF 549

PROJECT NO. 8930A.11 FILE NAME: 8930A11-00G04.dgn

Plot Date: 16-SEP-2013 5:29:36 PM | User: DDonk | PlotScale: 2:1 | DesignScript: Carollo_Std_Pen_v0905.pen | ColorTable: gshade.ctb | Model: Layout1 | LAST SAVED BY: ddonk

ABBREV	DESCRIPTION
-A-	
AA	AERATION AIR
AB	AHR BOLT OR AGGREGATE BASE & AERATION BASIN
ABAN	ABANDONED IN PLACE
ABC	AGGREGATE BASE COURSE
ABD	AERATION BASIN DRAIN
AC	ASPHALTIC CONCRETE
ACB	AIR CIRCUIT BREAKER
ACP	ASBESTOS CEMENT PIPE OR ACOUSTIC CEILING PANELS
ACU	AIR CONDITIONING UNIT
ADA	AMERICANS WITH DISABILITIES ACT
ADJ	ADJUSTABLE
ADWF	AVERAGE DRY WEATHER FLOW
AFF	ABOVE FINISHED FLOOR
AHR	ANCHOR
AI	ANALOG INPUT
AIC	AIR COMPRESSOR
AID	AIR DRYER
ALM	ALARM
ALTN	ALTERNATE
AL	ALUMINUM
ALP	AIR-LOW PRESSURE
AO	ANALOG OUTPUT
APPROX	APPROXIMATE
ARCH	ARCHITECTURAL
ARV	AIR RELEASE VALVE
AS	AIR SCOUR
ATC	ACOUSTICAL TILE CEILING
AWP	ACOUSTIC WALL PANEL
AUTO	AUTOMATIC
AUX	AUXILIARY
AV	ANGLE VALVE
AVG	AVERAGE
@	AT
-B-	
BCV	BALL CHECK VALVE
BCW	BARE COPPER WIRE
BD	BOARD
BF	BLIND FLANGE, BOTTOM FLAT
BFP	BACK FLOW PREVENTER
BFV	BUTTERFLY VALVE
BL	BLEACH
BLDG	BUILDING
BLK	BLOCK
BLKG	BLOCKING
BLO	BLOWER
BM	BEAM
BOD	BOTTOM OF DUCT
BOP	BOTTOM OF PIPE
BRG	BEARING
BRKR	BREAKER
BS	BOTTOM SLUDGE
BSC	BAR SCREEN
BSCIP	BELL & SPIGOT CAST IRON PIPE
BSP	BLACK STEEL PIPE
BTU	BRITISH THERMAL UNITS
BV	BALL VALVE
BVC	BEGIN VERTICAL CURVE
BYP	BYPASS
-C-	
C	CONDUIT
C TO C	CENTER TO CENTER
CA	CONCRETE ANCHOR
CB	CATCH BASIN
	CUBIC FOOT PER MINUTE
CFM	CHANNEL AIR
CHA	CHANNEL
CHAN	CHLORINE RESIDUAL
CHS	SENSOR
	CHLORINE
CHL	CHLORINE RESIDUAL
CHR	CAST IRON PIPE
CIP	CIRCUMFERENTIAL
CIRC	CAST IRON SOIL PIPE
CISP	CONSTRUCTION JOINT
CJ	CENTER LINE OR
CL OR ℄	CLOSE (D)
CLD	CHLORINE LEAK DETECTOR
CLG	CHLORINE GAS OR CEILING
CLL	CHLORINE LIQUID
CLO	CLEAN LUBE OIL
CLP	CONTROL PANEL
CLR	CLEAR OR CHLORINE RELIEF
CLSM	CONTROLLED LOW - STRENGTH MATERIAL
CLV	CHLORINE VACUUM OR CHLORINE VENT
CMLSP	CEMENT MORTAR LINED STEEL PIPE
CMP	CORRUGATED METAL PIPE
CMU	CONCRETE MASONRY UNIT
CND	CONDUIT
CO	CLEANOUT OR CONDUIT ONLY
COL	COLUMN
COMP	COMPACTED
COMPA	COMPRESSED AIR
CONC	CONCRETE
CONN	CONNECTION
CONSTR	CONSTRUCTION
CONT	CONTINUE (D) (OUS) OR CONTROL
COOR	COORDINATE
CPLG	COUPLING
CPT	CONTROL POWER TRANSFORMER
CR	CONDENSATE RETURN
CRN	CRANE
CRPT	CARPET TILE
CS	CHLORINE SOLUTION
CSE	CHLORINATED SECONDARY EFFLUENT
CSP	CARBON STEEL PIPE
CT	CERAMIC TILE
CTD	CENTERED
CTSK	COUNTERSUNK
CU	CUBIC
CUP	COPPER PIPE
CW	COLD WATER
-D-	
D	DRAIN
DBL	DOUBLE
DCS	DECHLORINATION SOLUTION SYSTEM OR DILUTED CAUSTIC SOLUTION
DEG	DEGREE
DET	DETAIL
DG	DIGESTER GAS
DGR	DEGRITTED RETURN
DGS	DIGESTED SLUDGE
DI	DISCRETE INPUT
DIA OR Ø	DIAMETER
DIAG	DIAGONAL
DIG	DIGESTER
DIM	DIMENSION
DIP	DUCTILE IRON PIPE
DIPBS	DUCTILE IRON PIPE, BELLS & SPIGOT
DIPMJ	DUCTILE IRON PIPE MECHANICAL JOINT
DIST	DISTRIBUTION
DJ	DOUBLE JOINT
DMPR	DAMPER
DN	DOWN
DO	ENGINE DIESEL OIL OR DISCRETE OUTPUT
DR	DRAIN OR DRIVE
DS	DOWN SPOUT
DSL	DIGESTED SLUDGE
DV	DIAPHRAGM VALVE
DW	DEWATERING PUMP DISCHARGE
DWG	DRAWING
-E-	
E	EAST OR BURIED ELECTRICAL
EA	EACH
ECC	ECCENTRIC
ED	EQUIPMENT DRAIN
EDB	ELECTRICAL DUCT BANK
EEX	ENGINE EXHAUST
EF	EACH FACE OR EXHAUST FAN
EFL	EFFLUENT
EFU	EXHAUST FAN UNIT
EGR	ENGINE GENERATOR ROOM
EJW	ENGINE JACKET WATER
EL	ELEVATION
ELB	ELBOW
ELEC	ELECTRIC (AL)
EMBED	EMBEDMENT
EMH	ELECTRICAL MANHOLE
ENGR	ENGINEER
EO	EMERGENCY OVERFLOW
EOP	EDGE OF PAVEMENT
EP	EXPLOSION PROOF
EQB	EQUALIZATION BASIN
EQL	EQUAL, EQUALIZATION
EQPT	EQUIPMENT
ES	EMERGENCY STOP
ESEW	EMERGENCY SHOWER AND EYEWASH
ESHA	ENVIRONMENTALLY SENSITIVE HABITAT AREA
EVC	END VERTICAL CURVE
EW	EACH WAY
EWC	ELECTRIC WATER COOLER
EWH	ELECTRIC WATER HEATER
EXIST	EXISTING
EXP	EXPANSION
EXPO	EXPOSED
EXT	EXTEROIR
-F-	
F	FIRE WATER
FA	FLAME ARRESTOR OR FOUL AIR
FACP	FIRE ALARM CONTROL PANEL
FAE	FOUL AIR EXHAUST
FAN	FAN
FB	FLAT BAR
FC	FLEXIBLE CONNECTION OR FLEXIBLE COUPLING
FCA	FLANGE COUPLING ADAPTER
FCL	FAILS CLOSED OR FERRIC CHLORIDE
FCS	FERRIC CHLORIDE SOLUTION
FCTF	FACTORY FINISH
FCV	FLAPPER CHECK VALVE
FD	FLOOR DRAIN
FDN	FOUNDATION
FE	FINAL EFFLUENT OR FLOW ELEMENT
FEC	FIRE EXTINGUISHER CABINET
FEXT	FIRE EXTINGUISHER
FF	FAR FACE OR FACTORY FINISH
FG	FINISH GRADE
FHY	FIRE HYDRANT
FIG	FIGURE
FILP	FAILS IN LAST POSITION
FIN FL	FINISH FLOOR
FIT	FLOW INDICATOR/ TRANSMITTER
FL	FLOOR
FLEX	FLEXIBLE
FLG	FLANGE
FLGA	FLANGE ADAPTER
FLL	FLOW LINE
FLT	FILTRATE
FM	FORCE MAIN
FO	FAILS OPEN OR FUEL OIL
FOR	FUEL OIL RETURN
FOS	FUEL OIL SUPPLY
FPR	FIRE ALARM CABLE PAIR
FR	FORWARD-REVERSE
FRP	FIBERGLASS REINFORCED PLASTIC
FS	FROTH SPRAY OR FINISH SURFACE
FSH	FLUSH SHELL
FSLOS	FAST-SLOW LOCKOUT STOP
FSP	FABRICATED STEEL PIPE
FST	FAST OR FORWARD-STOP
FSST	FAST-SLOW-STOP
FT	FOOT
FTC	FAIL TO CLOSE
FTG	FOOTING
FTO	FAIL TO OPEN
FW	FRESH WATER
FX	FIRE EXTINGUISHER
FXE	FIRE EXTINGUISHER(ELEC RM)
-G-	
G	GRIT PIPING
GA	GAGE OR GAUGE
GALV	GALVANIZE (D)
GB	GRAB BAR
GEN	GENERATOR
GFI	GROUND FAULT INTERRUPTOR
GL	GLASS
GLB	GLUE LAMINATED BEAM
GLCIP	GLASS LINED CAST IRON PIPE
GLV	GLOBE VALVE
GND	GROUND
GR	GRADE
GSP	GALVANIZED STEEL PIPE
GTV	GATE VALVE
GWB	GYPSUM WALLBOARD
GYP	GYPSUM
-H-	
H1E	HOOK ONE END
H2E	HOOK TWO ENDS
HA	HAND-AUTO
HDW	HARDWARE
HLA	HIGH LEVEL ALARM
HM	HALLOW METAL
HOA	HAND-OFF-AUTO
HORIZ	HORIZONTAL
HP	HIGH POINT OR HORSEPOWER
HPA	HIGH PRESSURE AIR
HPT	HIGH POINT
HPU	HEAT PUMP UNIT
HR	HOSE RACK
HRR	HEAT RECOVERY RETURN
HRS/HRW	HEAT RECOVERY SUPPLY
HTR	HEATER
HW	HEATED DOMESTIC WATER OR HOT WATER
HWL	HIGH WATER LEVEL
HWR	HOT WATER RETURN
HWS	HOT WATER SUPPLY OR HIGH WATER SURFACE
-I-	
IA	INSTRUMENT AIR
IC	INSTRUMENTATION CONDUIT
ID	INTERIOR DIAMETER
IN OR "	INCH
INCLR	INTERCOOLER
INF	INFLUENT
INJ	INJECTOR
INSTR	INSTRUMENT (ATION)
INSUL	INSULATE (D) (ING) (TION)
INTEG	INTEGRAL
INTR	INTERIOR
INVT	INVERT
IPB	INSTRUMENTATION PULL BOX
IPD	INFLUENT PUMP DISCHARGE
IPR	INFLUENT PUMP RECYCLE
ISB	INFLUENT SEWER BYPASS
I/O	INPUT/OUTPUT MODULE
-J-	
J	JOIST
JAN	JANITOR
JB	JUNCTION BOX
JT	JOINT
JWR	JACKET WATER RETURN
JWS	JACKET WATER SUPPLY
-L-	
L	ANGLE OR LEFT
LA	LIGHTNING ARRESTER
LAB	LABORATORY
LC	LOCK CLOSE
LCP	LOCAL CONTROL PANEL
LIM SW	LIMIT SWITCH
LL	LIVE LOAD
LLA	LOW LEVEL ALARM
LLCO	LOW LEVEL CUT OFF
LLH	LONG LEG HORIZONTAL
LLV	LONG LEG VERTICAL
LO	LOCK OUT
LOP	LOCK OPEN
LOR	LOCAL-OFF-REMOTE
LOS	LOCKOUT-STOP
LOWRF	LOS OSOS WATER RECYCLING FACILITY
LP	LOW POINT OR LIQUID PROPANE
LPA	LOW PRESSURE AIR
LPDG	LOW PRESSURE DIGESTER GAS
LR	LONG RADIUS
LRA	LOCAL-REMOTE-AUTO
LS	LIMIT SWITCH
LSA	LEVEL SENSOR, AIR (BUBBLER)
LTG	LIGHTNING
LUBO	LUBE OIL
LVR	LOUVER
LWL	LOW WATER LEVEL
LWS	LOW WATER SURFACE
L/L	LEAD/LAG
L/L/LL	LOCAL-REMOTE
L/R	LEAD/LAG/LAG-LAG
-M-	
MATL	MATERIAL
MAX	MAXIMUM
MCC	MOTOR CONTROL CENTER
MCP	MOTOR CIRCUIT PROTECTOR
MECH	MECHANICAL
MFRS	MANUFACTURER'S
MH	MANHOLE, SANITARY
MIN	MINIMUM
MISC	MISCELLANEOUS
MJ	MECHANICAL JOINT
MJDIP	MECHANICAL JOINT DUCTILE IRON PIPE
MK	MARK
ML	MIXED LIQUOR
MON	MONUMENT
MSL	MEAN SEA LEVEL
MTD	MOUNTED
MV	MOTORIZED VALVE
MWS	MAXIMUM WATER SURFACE
MXR	MIXER
-N-	
N	NORTH
NA	NOT APPLICABLE
NAT GR	NATURAL GRADE
NC	NORMALLY CLOSED
NCHO	NORMALLY CLOSED HEAD OPEN
NDV	NEEDLE VALVE
NF	NEAR FACE
NG	NATURAL GAS
NL	NIGHT LIGHT
NO	NORMALLY OPEN
NO OR #	NUMBER
NOHC	NORMALLY OPEN HEAD CLOSED
NOM	NOMINAL
NP	NATIONAL PIPE THREAD
NTS	NOT TO SCALE
NV	NEEDLE VALVE
-O-	
OC	ON CENTER
OCL	OPEN-CLOSE
OD	OUTSIDE DIAMETER
OIS	OPERATOR INTERFACE STATION
OP	OPEN
OPNG	OPENING
OPP	OPPOSITE
OPR	OPERATE(OR)
OSC	OPEN-STOP-CLOSE
OTF	OUTFALL
OVFL	OVERFLOW
OVLD	OVERLOAD
-P-	
PA	PLANT AIR
PB	PULL BOX
PBP	PLANT BYPASS
PCV	PLUG CONCENTRIC VALVE
PC	POINT OF CURVATURE
PD	PLANT DRAIN
PE	PLANT EFFLUENT
PEF	PRIMARY EFFLUENT
PERP	PERPENDICULAR
PEV	PLUG ECCENTRIC VALVE
PG	PRESSURE GAUGE
PH	PHASE, pH
PHW	PLANT HOT WATER
PI	POINT OF INTREST OR PRIMARY INFLUENT
PIV	PINCH VALVE
PL	PLATE (STEEL) OR PROPERTY LINE
PLC	PROGRAMMABLE LOGIC CONTROLLER
PLCS	PLACES
PLE	PLAIN END
PPD	POUNDS PER DAY
PLYWD	PLYWOOD
PMP	PUMP
PNL	PANEL
POL	POLYMER
POLS	POLYMER SOLUTION
PR	PAIR OR INSTRUMENT CABLE PAIR
PRC	PLANT RECYCLE
PREFAB	PREFABRICATED
PRI	PRIMARY
PRPNE	PROPANE GAS
PRV	PRESSURE REDUCING VALVE
PS	PRIMARY SLUDGE, PUMP STATION
PSC	PRIMARY SCUM
PSI	POUND PER SQUARE INCH
PT	POINT OF TANGENCY
PV	PLUG VALVE
PVC	POLYVINYL CHLORIDE
PVCP	RIGID POLYVINYL CHLORIDE PIPE
PVI	POINT OF VERTICAL INTERSECTION
PVMT	PAVEMENT
PWR	POWER
-R-	
R	RIGHT OR PLANT RECYCLE FLOW
RAD	RADIUS
RAS	RETURN ACTIVATED SLUDGE
RCP	REINFORCED CONCRETE PIPE
RCPT	RECEPTACLE
RD	ROOF DRAIN
RDCR/RED	REDUCER
RDR	ROLL-UP-DOOR
RDY	READY
REF	REFERENCE
REINF	REINFORCE (D)(ING)(MENT)
REJ	RUBBER EXPANSION JOINT
REQD	REQUIRED
REV	REVISION OR REVERSE ACTING
REW	RECLAIMED WATER
RM	ROOM
RMT	REMOTE
RP	RADIUS POINT
RS	RAW SEWAGE
RTM	RUNNING TIME METER
R/W	RIGHT-OF-WAY
-S-	
S	SOUTH OR SLOPE
SA	SAMPLE PIPING OR SERVICE AIR
SC	SCUM
SCHED	SCHEDULE
SCF	STANDARD CUBIC FEET
SCFM	STANDARD CUBIC FOOT PER MINUTE
SCS	SCRUBBER CHLORINE SOLUTION
SCV	SWING CHECK VALVE
SD	STORM DRAIN
SE	SECONDARY EFFLUENT
SEC	SECONDARY
SECT	SECTION
SEL	SELECT
SF	SUPPLY FAN, SQUARE FEET
SGL	SINGLE
SH	SHEET
SIL	SILENCE
SIM	SIMILAR
SL	SLUDGE OR SLOW
SLD	SINGLE LINE DRAWING
SLG	SLUDGE OR SLICE GATE
SLO	SAN LUIS OBISPO
SLOS	START-LOCKOUT-STOP
SLP	SLOPE
SN	SUPERNATANT
SOLV	SOLENOID VALVE
SOV	SULFUR OXIDE VACUUM
SP	STOP
SPEC	SPECIFICATION
SPLP	SAMPLER PUMP
SQ	SQUARE
SR	STOP-RESET, SHORT RADIUS
SRG	SPLIT RANGE
SRT	SOLIDS RETENTION TIME
SS	SERVICE SINK OR START-STOP OR SANITARY SEWER
SSC	SECONDARY SCUM
SSK	SECONDARY SKIMMINGS
SSL	SECONDARY SLUDGE
SST	STAINLESS STEEL
SSTT	SOLID STATE TRIP
SSW	SANITARY SEWER
ST	STEAM OR START
STA	STATION
STD	STANDARD
STL	STEEL
STM	STEAM
STOR	STORAGE
STR	STRAINER OR STRUCTURE
STRL	STRUCTURAL
STRUCT	STRUCTURE
SUSP	SUSPENDED
SW	SOFTENED WATER
SWGR	SWITCHGEAR
SWR	SEAL WATER
SYMM	SYMMETRICAL
S/W	SIDEWALK
-T-	
TBG	TUBING
TC	TOP OF CONCRETE
TD	THERMAL DISPERSION
TDR	TOWEL DISPENSER/ RECEPTACLE
TE	TERTIARY EFFLUENT
TEL	TELEPHONE SERVICE OR TELEPHONE
TEMP	TEMPERATURE
TF	TOP FLAT
TFR	TRANSFORMER
TH	TOILET PAPER HOLDER
THERMO	THERMOSTAT
THK	THICK/THICKENING
THO	THICKENER OVERFLOW
THRU	THROUGH
TJB	TELEPHONE JUNCTION BOX
TM	TECHNICAL MEMORANDA
TNK	TANK
TOC	TOP OF CONCRETE
TOD	TOP OF DUCT BANK
TOS	TOP OF STEEL
TOW	TOP OF WEIR, TOP OF WALL
TPS	THICKENED PRIMARY SLUDGE
TRF	TRANSFER
TS	THICKENED SLUDGE
TWAS	THICKENED WASTE ACTIVATED SLUDGE
TYP	TYPICAL
T&B	TOP AND BOTTOM
T&G	TONGUE AND GROOVE
TDH	TOTAL DYNAMIC HEAD
TWW	TERTIARY WASHWATER
-U-	
UNO	UNLESS NOTED OTHERWISE
UPS	UNINTERRUPTIBLE POWER SUPPLY
UR	URINAL
-V-	
V OR VLV	VALVE
VAC	VACUUM
VB	VALVE BOX
VC	VICTAULIC COUPLER OR VERTICAL CURVE
VCP	VITRIFIED CLAY PIPE
VERT	VERTICAL
VFD	VARIABLE FREQUENCY DRIVE
VN	VENT
VOL	VOLUME
VP	VENT PIPE
VTR	VENT THROUGH ROOF
VIB	VIBRATION
-W-	
W	WEST
WAS	WASTE ACTIVATED SLUDGE
WC	WATER CLOSET
WD	WOOD
WF	WIDE FLANGE (BEAM)
WH	WATER HEATER
WLO	WASTE LUBE OIL
WO	WASTE OIL
WP	WORKING POINT OR WEATHERPROOF
WR	WETLANDS RETURN
WS	WATER SURFACE
WSW	WALL SPRAY WATER
WW	WASH WATER
WWF	WELDED WIRE FABRIC
W/	WITH
W/O	WITHOUT
W-O-L	WELD-O-LET
-X-	
XFMR	TRANSFORMER
-Y-	
YD	YARD

ABBREV	DESCRIPTION
AA	AERATION AIR
ALUM	ALUMINUM SULFATE OR POLYALUMINUM CHLORIDE
CD	CONDENSATE DRAIN
CHD	CHEMICAL DRAIN OR VENT
CW	COLD WATER
D	DRAIN
DEC	DECANT
EEX	ENGINE EXHAUST
FAD	FOUL AIR DUCT
FAP	FOUL AIR PIPE
FBW	FILTER BACKWASH
FD	FLOOR DRAIN
FE	FILTER EFFLUENT
FIL	FILTRATE
FM	FORCE MAIN
FOR	FUEL OIL RETURN
FOS	FUEL OIL SUPPLY
FSW	FIRE SUPPLY WATER
HPA	HIGH PRESSURE AIR
HW	HOT WATER
IRRIG	IRRAGATION
ML	MIXED LIQUOR
NG	NATURAL GAS
OOCR	OUT-OF-COMPLIANCE RETURN
PD	PLANT DRAIN OR PROCESS DRAIN
PDFM	PLANT DRAIN FORCE MAIN
POL	POLYMER
PW	PLANT WATER / UTILITY WATER
RAS	RETURN ACTIVATED SLUDGE
REW	RECYCLED OR RECLAIMED WATER
RL	REFRIGERANT LIQUID
RV	REFRIGERANT VAPOR
SA	SAMPLE LINE
SC	SCUM
SD	STORM DRAIN
SE	SECONDARY EFFLUENT
SEP	SEPTAGE
SHS	SODIUM HYPOCHLORITE SOLUCTION
SI	SECONDARY INFLUENT
SPD	SUMP PUMP DISCHARGE
SS	SANITARY SEWER
SSD	STRUCTRUE SUBSURFACE DRAIN
STW	STORM WATER (PUMPED)
TWAS	THICKENED WASTE ACTIVATED SLUDGE
V	VENT
VP	VENT PIPING
W1	POTABLE WATER FOR HUMAN CONSUMPTION
W2	NON-POTABLE WATER FOR PROCESS
WAS	WASTE ACTIVATED SLUDGE

DRAWING CROSS REFERENCE

REV	DATE	BY	DESCRIPTION

DESIGNED HGK
DRAWN NRG
CHECKED KWH
DATE SEPT 2013

REGISTERED PROFESSIONAL ENGINEER HAN GIL KANG No. 62686 CIVIL STATE OF CALIFORNIA 9/16/2013

carollo®

SAN LUIS OBISPO COUNTY

SAN LUIS OBISPO COUNTY
LOS OSOS WATER RECYCLING FACILITY PROJECT
GENERAL
ABBREVIATIONS

VERIFY SCALES
BAR IS ONE INCH ON ORIGINAL DRAWING
0 1"
IF NOT ONE INCH ON THIS SHEET, ADJUST SCALES ACCORDINGLY

JOB NO. 8930A.11
DRAWING NO. 00G05
SHEET NO. OF 549

Plot Date: 16-SEP-2013 5:29:59 PM User: DDonk PlotScale: 2:1 DesignScript: Carollo_Std_Pen_v0905.pen ColorTable: gshade.ctb Model: Layout1
LAST SAVED BY: ddonk

PIPING SYMBOLS

GENERAL MECHANICAL & HVAC NOTES:

1. GENERAL MECHANICAL AND HVAC NOTES APPLY TO ALL MECHANICAL AND HVAC DRAWINGS.
2. ALL PIPE PENETRATIONS THROUGH WALLS AND FLOOR SLABS SHALL BE PROVIDED WITH SLEEVES PER TYPICAL DETAIL NUMBER P304 UNLESS NOTED OTHERWISE.
3. ALL PIPE PENETRATIONS THROUGH DRY WALLS SHALL BE PROVIDED WITH SLEEVES PER TYPICAL NUMBER P302 UNLESS NOTED OTHERWISE.

4A. ALL REQUIRED PIPE GUIDES, SUPPORTS, ANCHORS, AND PROVISIONS FOR EXPANSION MAY NOT NECESSARILY BE SPECIFICALLY CALLED OUT ON THE DRAWINGS. ALL SUPPORTS AND APPURTENANCES REQUIRED FOR A COMPLETE SYSTEM SHALL BE PROVIDED BY THE CONTRACTOR PER SPECIFICATIONS AND ARE TO INCLUDE ALL NECESSARY AND APPROPRIATE PROVISIONS FOR SUPPORT, SEISMIC RESTRAINT, BRACING, AND EXPANSION OF PIPES PER SPECIFICATION SECTIONS 15061, 15062, AND 15063.

4B. LAYOUTS AND SIZE OF PIPE SUPPORTS, PIPING EXPANSION PROVISIONS AND DUCT SUPPORTS WHERE SHOWN ON THE DRAWINGS ARE TO CONVEY CONCEPTUAL INTENT ONLY. SUPPORTS AND PROVISIONS FOR EXPANSION ARE REQUIRED AS DETERMINED BY THE CONTRACTOR PER SPECIFICATION SECTION 15061 "PIPE SUPPORTS", SECTION 15053 "SEISMIC RESTRAINTS FOR PIPING", AND SECTION 15054 "EXPANSION CONTROL FOR PIPING". CONTRACTOR SHALL PROVIDE ANALYSIS AND CALCULATIONS IN ACCORDANCE WITH THE SPECIFICATIONS. CONTRACTOR SHALL PROVIDE ADDITIONAL SUPPORTS, EXPANSION PROVISIONS, ETC. AS REQUIRED OR OTHERWISE NECESSARY AND APPROPRIATE, INCLUDING ALL PROVISIONS NECESSARY TO ACCOMMODATE STRUCTURAL JOINTS AND DIFFERENTIAL STRUCTURAL MOVEMENT.

4C. UNLESS SPECIFICALLY NOTED OTHERWISE, PROVIDE STAINLESS STEEL PIPE SUPPORTS THAT ARE PICKLED AND PASSIVATED FOR STAINLESS STEEL PIPING.

5. NOT ALL THE REQUIRED FITTINGS ARE SHOWN ON THE DRAWINGS. THE CONTRACTOR SHALL PROVIDE ALL THE FITTINGS SHOWN ON THE DRAWINGS AND ADDITIONAL FITTINGS AS REQUIRED FOR PIPING ARRANGEMENTS SHOWN ON THE DRAWINGS AND PER EQUIPMENT FURNISHED.
6. SUCTION AND DISCHARGE PIPING OF PUMPS SHALL BE INSTALLED AND SUPPORTED IN SUCH A MANNER SO THAT THEY SHALL NOT IMPART STRAIN ON PUMPS.
7. PIPING IS SHOWN DIAGRAMMATICALLY ON THE DRAWINGS. NOT EVERY OFFSET AND FITTING OR STRUCTURAL DIFFICULTY THAT MAY BE ENCOUNTERED HAS BEEN SHOWN ON THE DRAWINGS. THE CONTRACTOR SHALL MAKE MODIFICATIONS TO PIPING ALIGNMENT WHERE NECESSARY. MODIFICATIONS SHALL BE DONE AT NO ADDITIONAL COST TO THE OWNER AND SHALL BE DONE AFTER OWNER'S APPROVAL.
8. NOT ALL THE ITEMS ARE SHOWN IN PLANS, SECTIONS, DETAILS, SCHEMATICS, ISOMETRICS AND P & ID DRAWINGS. THE CONTRACTOR SHALL PROVIDE ALL THE ITEMS EVEN IF THEY ARE SHOWN AT ANY ONE LOCATION ON THE DRAWINGS OR SPECIFIED IN THE SPECIFICATIONS ONLY.
9. THE CONTRACTOR SHALL PROVIDE ALL THE ITEMS REQUIRED PER SPECIFICATIONS WHETHER OR NOT THEY ARE SHOWN ON THE DRAWINGS.
10. IN CASE OF A CONFLICT BETWEEN THE DRAWINGS, OBTAIN FROM THE ENGINEER DIRECTION AS TO HOW TO PROCEED.
11. OVERALL PHYSICAL SIZE OF THE EQUIPMENT SELECTED BY THE CONTRACTOR SHALL NOT EXCEED THE SIZE SHOWN ON THE DRAWINGS OR SPECIFIED IN THE SPECIFICATIONS. CLEARANCES OR DIMENSIONS SHOWN ON THE DRAWINGS SHALL BE MAINTAINED. THE CONTRACTOR SHALL INCLUDE THE COST OF THE ASSOCIATED CHANGES AND ADDITIONS INCLUDING CHANGES TO BUILDINGS AND STRUCTURE SIZES, DUE TO DEVIATION IN EQUIPMENT PHYSICAL SIZES IN HIS BID. ALL CHANGES AND ADDITIONS SHALL BE SUBMITTED FOR OWNER'S REVIEW AND SHALL BE DONE AFTER OWNER'S APPROVAL AT NO ADDITIONAL COST TO THE OWNER.
12. WARNING SIGNS SHALL BE PROVIDED PER SPECIFICATIONS ON FRONT AND BACK OF ALL REMOTELY CONTROLLED EQUIPMENT.
13. SEE STRUCTURAL DRAWINGS FOR ROOFTOP CURB AND FLASHING DETAILS.
14. SEE STRUCTURAL DRAWINGS FOR ALL EQUIPMENT BASE DETAILS.
15. INSTALL HEATING, VENTILATING AND AIR CONDITIONING EQUIPMENT AND DUCTWORK TO AVOID INTERFERENCE WITH STRUCTURE, PIPING, EQUIPMENT, CONDUIT, LIGHTING, ETC. UNLESS OTHERWISE INDICATED WITH A BOTTOM OF DUCT ELEVATION, ALL DUCTWORK SHALL BE ROUTED AS DIRECTED BY OWNER. MINIMUM HEIGHT SHALL BE 8'-0" ABOVE FINISHED FLOOR UNLESS OTHERWISE INDICATED ON THE DRAWINGS. SHOP DRAWINGS SHALL INCLUDE DUCT LAYOUT AND VERIFICATION THAT COORDINATION HAS BEEN PERFORMED WITH OTHER TRADES.
16. DUCTWORK SHALL BE FABRICATED, REINFORCED, SUPPORTED, AND SEALED FOR OPERATING PRESSURES INDICATED IN SCHEDULES FOR THE EQUIPMENT IT SERVES. ALL DUCTWORK SHALL HAVE A MINIMUM SMACNA PRESSURE CLASSIFICATION OF TWO INCHES. UNLESS NOTED OTHERWISE
17. DUCT SIZES INDICATED ARE CLEAR DIMENSIONS INSIDE THE DUCT OR DUCT LINING.
18. AIRTIGHT ACCESS DOORS SHALL BE PROVIDED TO ALLOW INSPECTION OF ALL CONTROL DAMPERS AND FILTERS. THE ACCESS DOOR SHALL BE OF A SIZE SUITABLE FOR THE DUCTWORK DIMENSIONS AND SHALL NOT BE LESS THAN 12" X 12" UNLESS OTHERWISE INDICATED.
19. THE LOCATION OF PIPING AND VALVES TO THE AIR HANDLING EQUIPMENT SHALL NOT INTERFERE WITH FILTER REMOVAL OR AIR HANDLING EQUIPMENT SERVICING.
20. BOTTOM ELEVATION OF UNIT HEATERS SHALL BE 8'-0" ABOVE FINISHED FLOOR UNLESS OTHERWISE INDICATED.
21. NOT ALL HANGERS, BRACKETS, SUPPORTS OR BRACES FOR DUCTWORK ARE INDICATED ON THE DRAWINGS. REFER TO THE SPECIFICATIONS FOR SUPPORT REQUIREMENTS NOT SHOWN ON THE DRAWINGS.
22. DUCT CONNECTIONS TO EQUIPMENT AND PIPING SIZES TO EQUIPMENT SUPPORTS SHALL BE VERIFIED AND ADJUSTED TO MATCH ACTUAL EQUIPMENT AT NO ADDITIONAL COST TO OWNER.
23. POWER ROOF VENTILATORS AND ROOF HOODS SHALL BE PROVIDED WITH 1/2" MESH ALUMINUM BIRD SCREEN OVER ALL OPENINGS UNLESS NOTED OTHERWISE.
24. ALL PIPING JOINTS SHALL BE PER PIPE SCHEDULE AND IN ACCORDANCE WITH THE SPECIFICATIONS.
25. REFER TO SPECIFICATION SECTION 01140 AND OTHER APPLICABLE SECTIONS FOR WORK RESTRICTIONS AND CONSTRAINTS.
26. VERIFY LOCATIONS, SIZES, AND CONNECTION MATERIALS OF EXISTING PIPING AND EQUIPMENT BEFORE FABRICATING NEW PIPE.
27. WHERE METER BYPASS IS NOT PROVIDED, CONTRACTOR SHALL SUPPLY ONE MATCHING SPOOL PIECE FOR EACH SIZE (DIAMETER AND LENGTH) OF MAGNETIC FLOW METER WHICH CAN BE USED TO REPLACE THE METER WHEN MAINTENANCE IS REQUIRED. EACH SPARE SPOOL PIECE SHALL BE MADE OF THE SAME MATERIAL AS THE METER AND BE CLEARLY LABELED BY SIZE AND SERVICE.
28. ALL PIPING UNDER STRUCTURES OR CONCRETE SLAB SHALL BE CONCRETE ENCASED BEYOND THE EDGE OF FOOTING TO A DIMENSION EQUAL TO THE DISTANCE FROM BOTTOM FOOTING TO TOP OF PIPE PER TYPICAL DETAIL P040, WHETHER SHOWN OR NOT.
29. ALL FLEXIBLE COUPLINGS SHALL BE RESTRAINED PER APPLICABLE TYPICAL DETAILS P110 OR P112 UNLESS SPECIFICALLY NOTED OTHERWISE.
30. THE FIRST PIPE JOINT OUT OF STRUCTURES OR OUT OF CONCRETE ENCASEMENT SHALL BE AT THE EDGE OF WALL OR WITHIN TWO (2) FEET FROM EDGE OR WALL OR END OF CONCRETE ENCASEMENT. THE NEXT TWO (2) JOINTS SHALL BE A MAXIMUM OF FOUR (4) FEET ON CENTER UNLESS OTHERWISE NOTED.
31. REFER TO DWG 01C01 FOR CATHODIC PROTECTION NOTES. CATHODIC PROTECTION NOTES APPLY TO ALL MECHANICAL AND HVAC DRAWINGS.
32. INSTALL AUTOMATIC AIR VENTS AT ALL HIGH POINTS IN THE HOT WATER PIPING SYSTEM. AVOID LOCAL HIGH POINTS IN SODIUM HYDROCHLORITE PIPING. IF UNAVOIDABLE, INSTALL DEGASSING VALVE AT EACH LOCAL HIGH POINT.
33. WHETHER SHOWN ON THE DRAWINGS OR NOT, PROVIDE PIPE INSULATION PER INSULATION SCHEDULE.
34. REFER TO P&ID DRAWINGS FOR INSTALLATION OF INSTRUMENTS.
35. PROVIDE PW HOSE BIBS EVERY 50 FEET WITHIN PROCESS BUILDINGS AND AROUND PROCESS BASINS. GROUP MULTIPLE UTILITIES (ELECTRICAL OUTLETS, POTABLE WATER, PLANT WATER, HOSE BIB, ETC.) TOGETHER AT COMMON UTILITY STATIONS, WHEN FEASIBLE.

REV	DATE	BY	DESCRIPTION

DESIGNED HGK
DRAWN NRG
CHECKED KWH
DATE SEPT 2013

REGISTERED PROFESSIONAL ENGINEER HAN GIL KANG No. 62686 CIVIL STATE OF CALIFORNIA 9/16/2013

carollo

SAN LUIS OBISPO COUNTY

SAN LUIS OBISPO COUNTY
LOS OSOS WATER RECYCLING FACILITY PROJECT
GENERAL
PIPING SYMBOLS AND GENERAL NOTES

VERIFY SCALES
BAR IS ONE INCH ON ORIGINAL DRAWING
0 1"
IF NOT ONE INCH ON THIS SHEET, ADJUST SCALES ACCORDINGLY

JOB NO. 8930A.11
DRAWING NO. 00G06
SHEET NO. OF 549

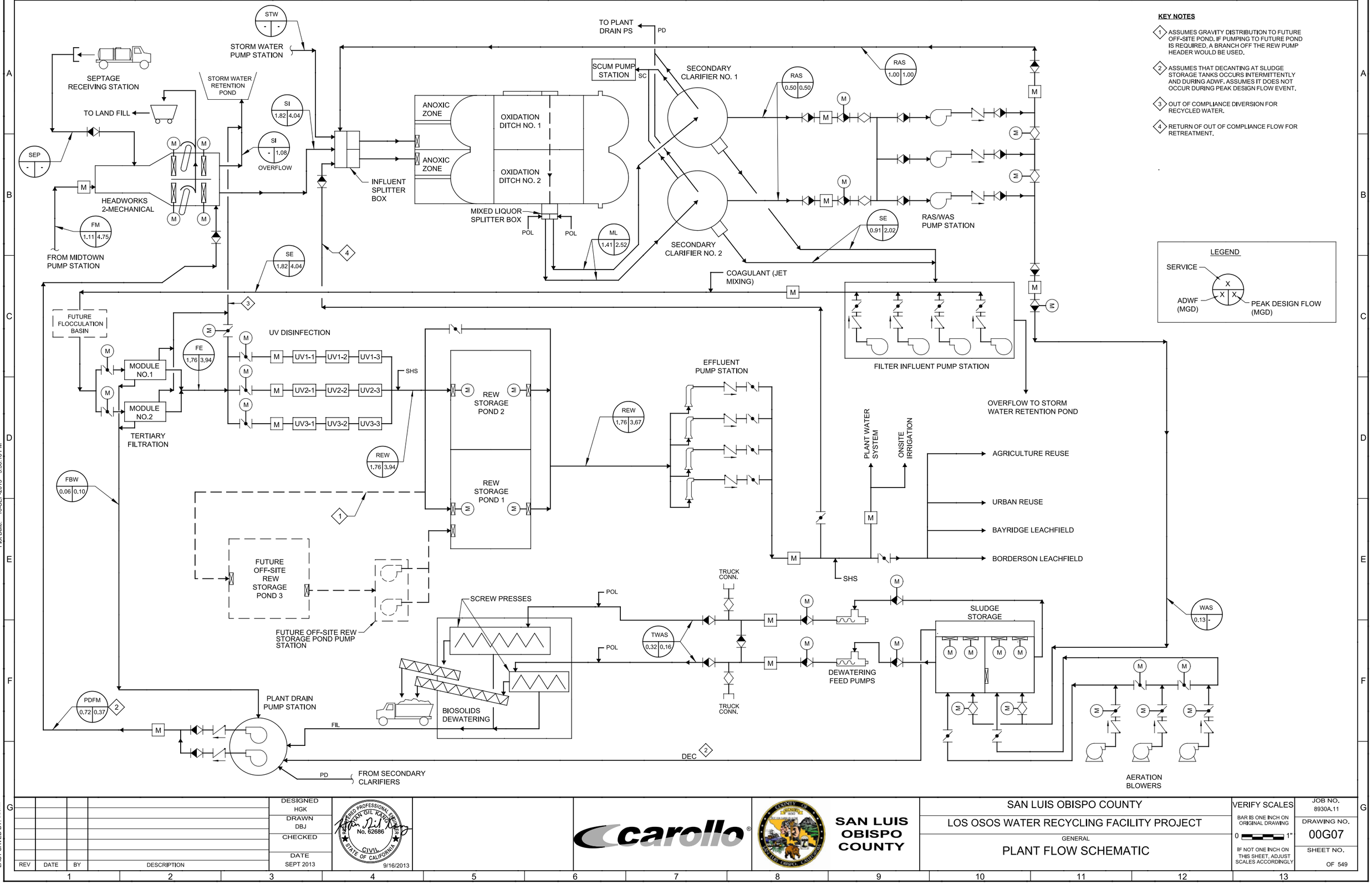

KEY NOTES

1. ASSUMES GRAVITY DISTRIBUTION TO FUTURE OFF-SITE POND. IF PUMPING TO FUTURE POND IS REQUIRED, A BRANCH OFF THE REW PUMP HEADER WOULD BE USED.
2. ASSUMES THAT DECANTING AT SLUDGE STORAGE TANKS OCCURS INTERMITTENTLY AND DURING ADWF. ASSUMES IT DOES NOT OCCUR DURING PEAK DESIGN FLOW EVENT.
3. OUT OF COMPLIANCE DIVERSION FOR RECYCLED WATER.
4. RETURN OF OUT OF COMPLIANCE FLOW FOR RETREATMENT.

LEGEND

SERVICE
ADWF (MGD)
X
X X
PEAK DESIGN FLOW (MGD)

REV	DATE	BY	DESCRIPTION

DESIGNED HGK
DRAWN DBJ
CHECKED
DATE SEPT 2013

REGISTERED PROFESSIONAL ENGINEER — JONATHAN GIL KANG — No. 62686 — CIVIL — STATE OF CALIFORNIA — 9/16/2013

carollo

SAN LUIS OBISPO COUNTY

SAN LUIS OBISPO COUNTY

LOS OSOS WATER RECYCLING FACILITY PROJECT

GENERAL

PLANT FLOW SCHEMATIC

VERIFY SCALES
BAR IS ONE INCH ON ORIGINAL DRAWING
0 1"
IF NOT ONE INCH ON THIS SHEET, ADJUST SCALES ACCORDINGLY

JOB NO. 8930A.11
DRAWING NO. 00G07
SHEET NO. OF 549

Plot Date: 16-SEP-2013 5:30:10 PM
LAST SAVED BY: ddonk

PROJECT NO. 8930A.11 FILE NAME: 8930A11-00G07.dgn

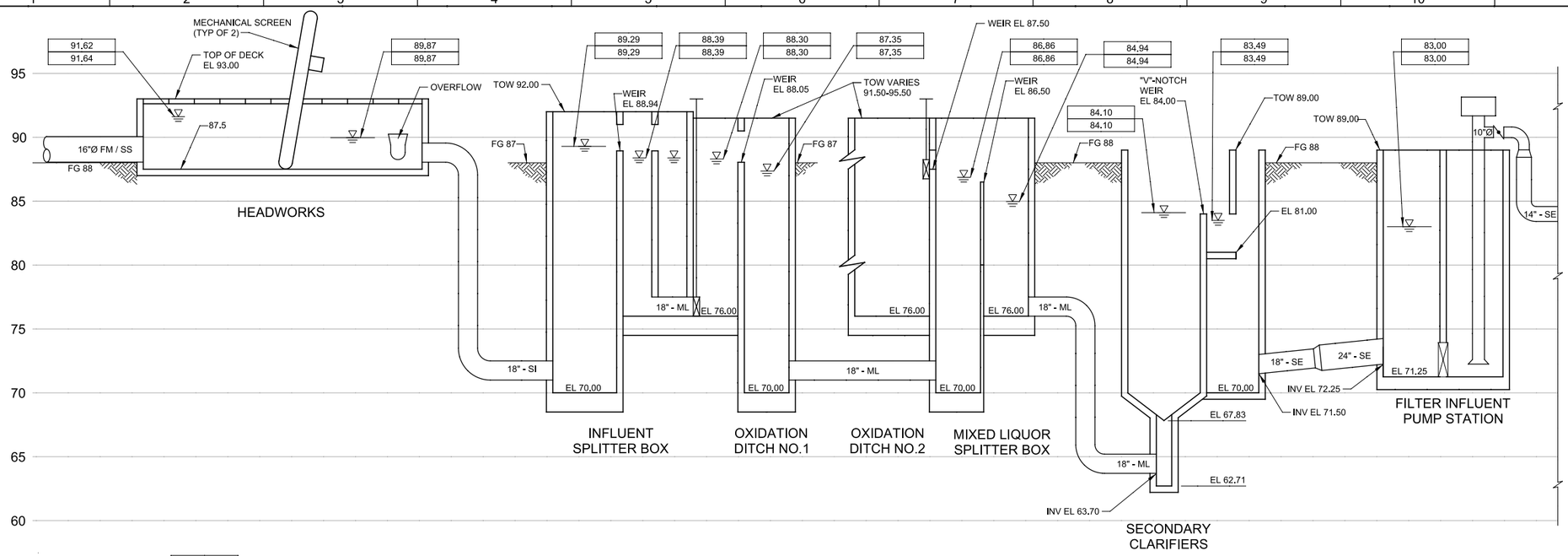

GENERAL NOTES

1. THE DESIGN INCLUDES AN OVERFLOW PIPE AT THE HEADWORKS EFFLUENT CHANNEL TO DIVERT INFLUENT FLOWS IN EXCESS OF THE DESIGN PEAK WET WEATHER FLOW TO STORM WATER RETENTION POND.
2. WATER SURFACE ELEVATIONS SHOWN ARE BASED ON HAVING ONE MECHANICAL SCREEN CHANNEL, TWO OXIDATION DITCHES, TWO SECONDARY CLARIFIERS, ONE FUTURE FLOCCULATION BASIN, ONE TERTIARY FILTER AND TWO UV CHANNELS IN SERVICE.
3. TOTAL MAXIMUM PLANT RECYCLE FLOWS IS 0.74 MGD. NORMAL MAXIMUM PLANT RECYLE IS 0.39 MGD.

KEY NOTES

1. BASED ON SIMULTANEOUSLY OPERATING TWO CONSTANT-SPEED PUMPS AT MID-TOWN PUMP STATION AND CONSIDERING FLOW DAMPENING THROUGH TREATMENT PROCESS.
2. BASED ON SIMULTANEOUSLY OPERATING THREE CONSTANT-SPEED PUMPS AT MID-TOWN PUMP STATION.

LEGEND

XX.X — W.S. EL @ DESIGN PEAK WET WEATHER FLOW OF 3.67 MGD PLUS RECYCLES (1)

XX.X — W.S. EL. @ MAXIMUM COLLECTION SYSTEM PUMP CAPACITY OF 4.75 MGD PLUS RECYCLES (2)

FG - FINISHED GRADE

TOW - TOP OF WALL

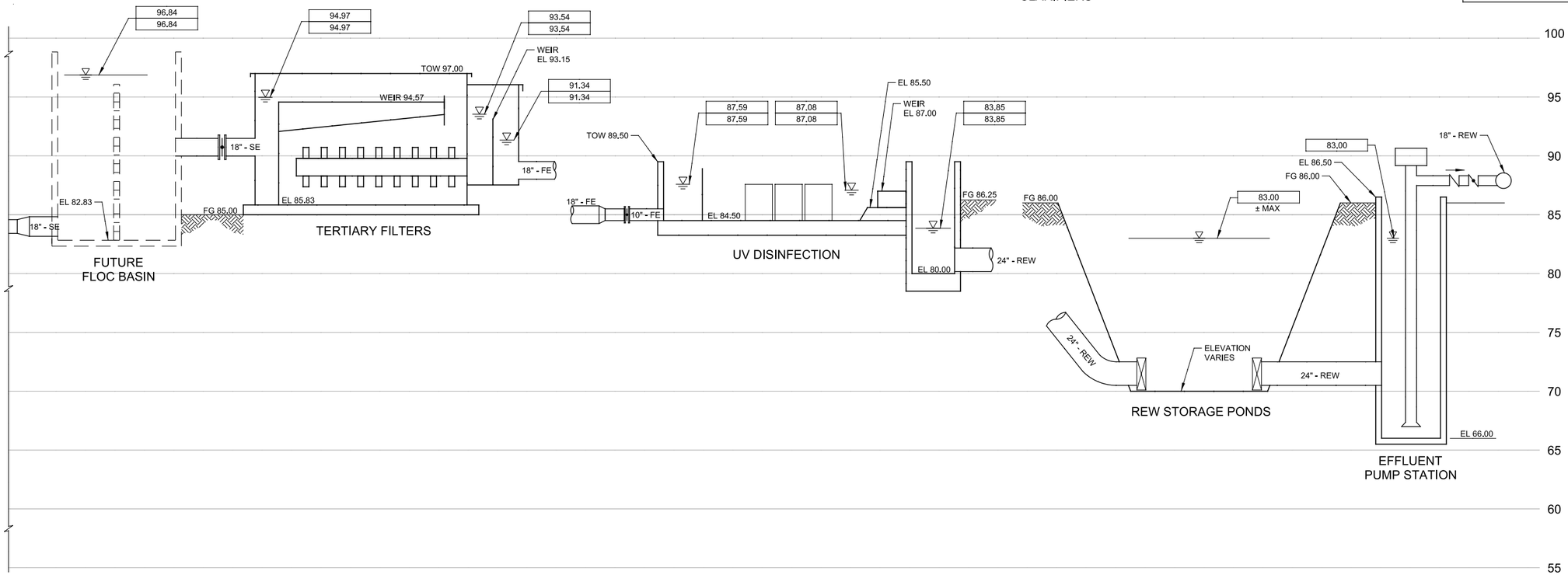

REV	DATE	BY	DESCRIPTION

DESIGNED ENK
DRAWN NRG
CHECKED KWH
DATE SEPT 2013

REGISTERED PROFESSIONAL ENGINEER — SEAN GIL KATZMAN — No. 62686 — CIVIL — STATE OF CALIFORNIA — 9/16/2013

carollo

SAN LUIS OBISPO COUNTY

SAN LUIS OBISPO COUNTY

LOS OSOS WATER RECYCLING FACILITY PROJECT

GENERAL

HYDRAULIC PROFILE

VERIFY SCALES
BAR IS ONE INCH ON ORIGINAL DRAWING
0 1"
IF NOT ONE INCH ON THIS SHEET, ADJUST SCALES ACCORDINGLY

JOB NO. 8930A.11
DRAWING NO. 00G08
SHEET NO. OF 549

PROJECT NO. 8930A.11 FILE NAME: 8930A11-00G08.dgn

Plot Date: 16-SEP-2013 5:30:19 PM
User: DDonk
PlotScale: 2:1
DesignScript: Carollo_Std_Pen_v0905.pen
ColorTable: gshade.ctb
Model: Layout1
LAST SAVED BY: djacobs

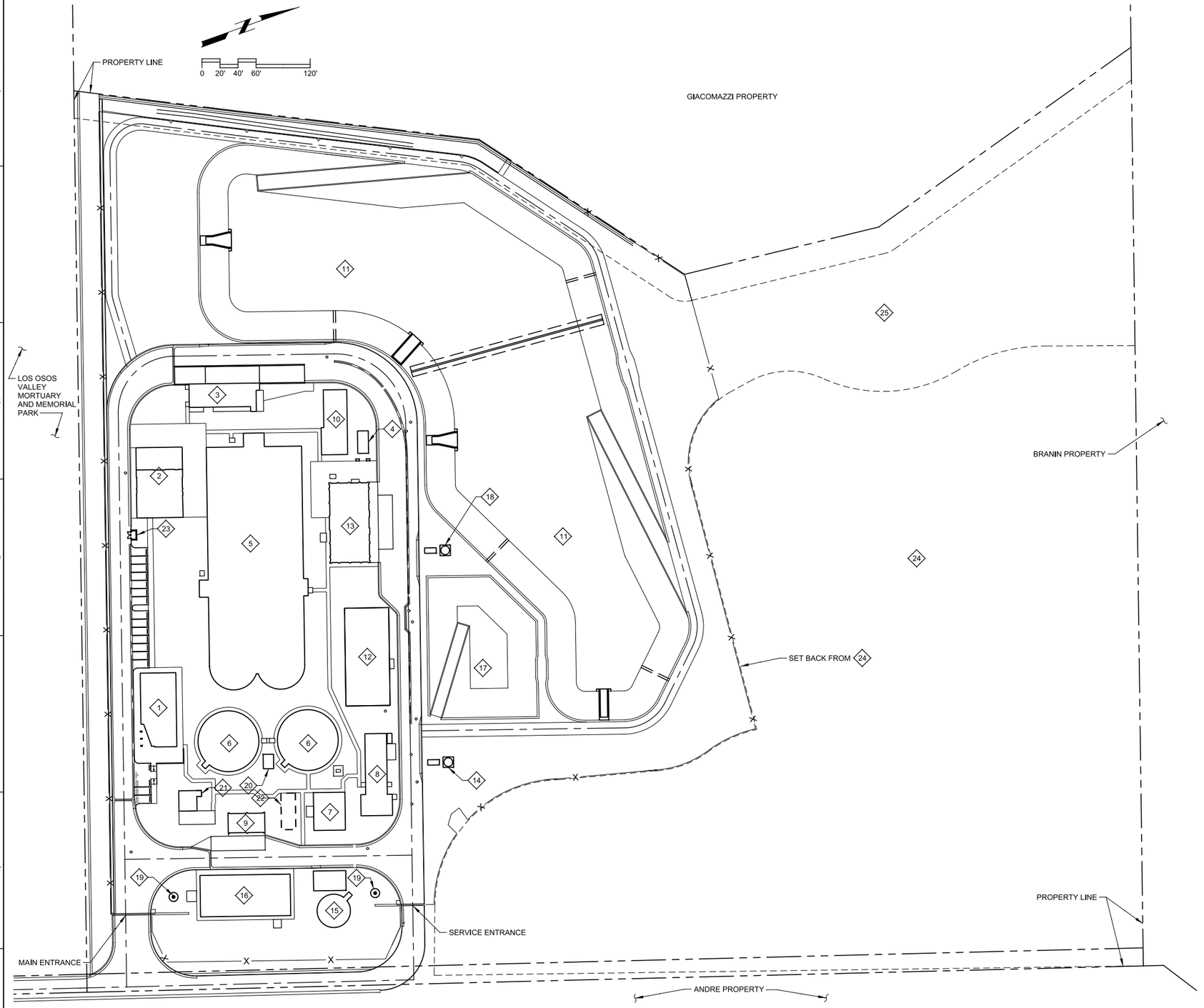

GENERAL NOTES

1. PROPERTY LINE: REFER TO APPENDIX L IN SPECIFICATIONS FOR LEGAL DESCRIPTION OF PROPERTY LINE.
2. LIMIT OF SETBACK FROM DESIGNATED ENVIRONMENTALLY SENSITIVE HABITAT AREA: REFER TO APPENDIX K IN SPECIFICATIONS FOR LEGAL DESCRIPTION OF THIS LIMIT.

GENERAL BIRD CONTROL NOTES

1. THE CONTRACTOR SHALL FURNISH AND INSTALL POLYCARBONATE BIRD SPIKES ON ALL EXPOSED EAVES AND FRAMING AS NEEDED TO DETER BIRDS FROM LANDING AND ROOSTING ON AREAS 5, 6, 30, 31, 32, 51, AND 70, AS WELL AS ON TOP OF SITE LIGHTING FIXTURES, LOWRF MONUMENT, AND OTHER SIMILAR PLACES. CONTRACTOR SHALL SELECT THE APPROPRIATE SIZE SPIKE AS DETERMINED BY SITE CONDITIONS. INSTALLATION SHALL COMPLY WITH MANUFACTURER'S RECOMMENDATIONS.

BASIS OF BEARING

THE SURVEY CONTROL FOR THIS SURVEY IS TIED TO THE CONTROL SURVEY PREPARED BY WALLACE GROUP IN 2005, AND RECORDED IN BOOK 92 OF RECORDS OF SURVEY AT PAGE 56 IN THE SAN LUIS OBISPO COUNTRY RECORDER'S OFFICE. THE HORIZONTAL DATUM IS THE NORTH AMERICAN DATUM OF 1983, EPOCH DATE OF 1991.35. THE PROJECTION USED IS THE CALIFORNIA COORDINATE SYSTEM OF 1983 (CCS83), ZONE 5.

COORDINATES AND ELEVATIONS ARE DERIVED BY REAL TIME KINEMATIC GPS (RTK) OBSERVATION CONSTRAINED TO POINT NUMBER 1026 OF SAID SURVEY. POINT 1026 IS A PK NAIL SET FOR AERIAL CONTROL AND IS LOCATED NEAR THE CENTERLINE OF RAVENNA AVENUE APPROXIMATELY 85 FEET NORTH OF THE INTERSECTION OF RAVENNA AVENUE AND MANZANITA DRIVE IN THE TOWN OF LOS OSOS.

POINT 1026
N 2311497.23
E 5714471.36
NAD83/CCS83 ZONE 5
EL=121.20' NAVD88

KEY NOTES	AREA	DESCRIPTION
1	5	ADMINISTRATION BUILDING
2	6	MAINTENANCE BUILDING
3	10	HEADWORKS
4	11	ODOR CONTROL FACILITY
5	20	OXIDATION DITCHES E5
6	21	SECONDARY CLARIFIERS
7	30	TERTIARY FILTERS
8	31	UV FACILITY
9	32	CHEMICAL FACILITY
10	40	EFFLUENT PUMP STATION
11	2	REW STORAGE PONDS
12	50	SLUDGE STORAGE TANKS
13	51	DEWATERING BUILDING
14	4	PLANT DRAIN PUMP STATION
15	60	WATER STORAGE TANK
16	70	ELECTRICAL BUILDING
17	2	STORM WATER RETENTION POND
18	4	STORM DRAIN PUMP STATION
19	3	GROUNDWATER WELLS
20	23	SCUM PUMP STATION
21	28	FILTER INFLUENT PUMP STATION
22	NA	FUTURE FLOCCULATION BASIN
23	80	TRASH ENCLOSURE
24	NA	DESIGNATED ENVIRONMENTALLY SENSITIVE HABITAT AREA
25	NA	REFER TO SECTION 01140 FOR PERMISSIBLE CONSTRUCTION ACTIVITIES IN THIS AREA

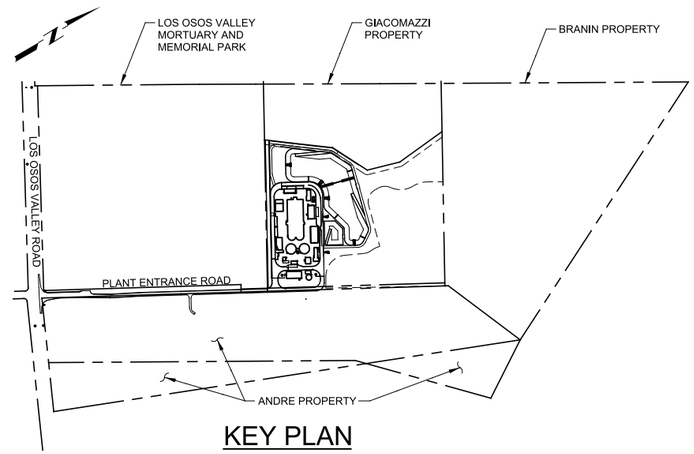

KEY PLAN

REV	DATE	BY	DESCRIPTION

DESIGNED HGK
DRAWN DBJ
CHECKED KWH
DATE SEPT 2013

REGISTERED PROFESSIONAL ENGINEER — KEVIN GIL KARG — No. 62686 — CIVIL — STATE OF CALIFORNIA — 9/16/2013

carollo

SAN LUIS OBISPO COUNTY

SAN LUIS OBISPO COUNTY
LOS OSOS WATER RECYCLING FACILITY PROJECT
GENERAL
OVERALL SITE PLAN

VERIFY SCALES
BAR IS ONE INCH ON ORIGINAL DRAWING
0 1"
IF NOT ONE INCH ON THIS SHEET, ADJUST SCALES ACCORDINGLY

JOB NO. 8930A.11
DRAWING NO. 00G09
SHEET NO. OF 549

PROJECT NO. 8930A.11 FILE NAME: 8930A11-00G09.dgn

Plot Date: 16-SEP-2013 5:30:30 PM
User: DDonk
PlotScale: 2:1
DesignScript: Carollo_Std_Pen_v0905.pen
ColorTable: gshade.ctb
Model: Layout1
LAST SAVED BY: ddonk

Plot Date: 16-SEP-2013 5:30:42 PM
User: DDonk
PlotScale: 2:1
DesignScript: Carollo_Std_Pen_v0905.pen
ColorTable: gshade.ctb
Model: Layout1
LAST SAVED BY: ddonk

GENERAL :

1. VERIFY ALL DIMENSIONS BEFORE STARTING WORK AND SHALL IMMEDIATELY NOTIFY THE ENGINEER OF ANY DISCREPANCIES.
2. UNLESS DETAILED, SPECIFIED, OR INDICATED OTHERWISE, CONSTRUCTION SHALL BE AS INDICATED IN THE APPLICABLE TYPICAL DETAILS AND GENERAL NOTES. TYPICAL DETAILS ARE MEANT TO APPLY EVEN THOUGH NOT REFERENCED AT SPECIFIC LOCATIONS ON DRAWINGS.
3. WHERE NO CONSTRUCTION DETAILS ARE SHOWN OR NOTED FOR ANY PART OF WORK, DETAILS SHALL BE THE SAME AS FOR OTHER SIMILAR WORK.
4. VERIFY LOCATION & SIZE OF OPENINGS AT ROOF, FLOORS, AND WALLS WITH ARCHITECTURAL, MECHANICAL, AND ELECTRICAL PLANS AND AS REQUIRED FOR EQUIPMENT FURNISHED, FOR ADDITIONAL OPENINGS AT ROOF, FLOORS AND WALLS SEE ARCHITECTURAL, MECHANICAL AND ELECTRICAL DRAWINGS. SEE SPECS AND MFR'S DATA FOR THIMBLES AND OTHER EMBEDDED ITEMS AROUND SLUICE GATE AND SLIDE GATE OPENINGS.
5. CODES:
   CALIFORNIA BUILDING CODE: 2010 CBC
   REINFORCED CONCRETE: AMERICAN CONCRETE INSTITUTE ACI 318-08
   ENVIRONMENTAL ENGINEERING CONCRETE STRUCTURES ACI 350-06
6. LOADING CRITERIA:
   MINIMUM LOADING REQUIREMENTS PER CHAPTER 16 OF THE 2010 CBC.

   DEAD LOAD . . . . . CALCULATED
   LIVE LOADS . . . . . SEE PLANS
   LATERAL EARTH PRESSURE AND ALLOWABLE BEARING PRESSURE PER SOILS REPORT.
   LATERAL SURCHARGE . . . . . EQUIVALENT TO 2 FT OF SOIL
   HYDROSTATIC FLUID PRESSURE . . . . . 63 PSF/FT
   WIND LOAD:
   BASIC WIND SPEED . . . . . 85 MPH (3 - SEC GUST)
   EXPOSURE C
   IMPORTANCE FACTOR 1.15
   SEISMIC LOAD:
   SEISMIC DESIGN CATEGORY . . . . . D
   SITE CLASS. . . . . D
   OCCUPANCY CATEGORY III
   SEISMIC IMPORTANCE FACTOR 1.25
   SHORT PERIOD SPECTRAL ACCELERATION, Ss 1.45g
   1-SEC PERIOD SPECTRAL ACCELERATION, S1 . . . . .0.543g
   SHORT PERIOD SITE COEFFICIENT, Fa 1.00
   1-SEC PERIOD SITE COEFFICIENT, Fv 1.50
7. CONSTRUCTION LOADS:
   STRUCTURES HAVE BEEN DESIGNED FOR OPERATIONAL LOADS ON COMPLETED STRUCTURES. DURING CONSTRUCTION, STRUCTURES SHALL BE PROTECTED BY BRACING AND BALANCING WHEREVER EXCESSIVE LOADS MAY OCCUR.
8. INSERTS AND SLEEVES FOR PIPES, GATES, ETC. AND EMBEDDED ITEMS SUCH AS CONDUITS ARE SHOWN IN MECHANICAL AND ELECTRICAL DRAWINGS.

CONCRETE :

1. ALL STRUCTURAL CONCRETE STRENGTH SHALL BE 4,000 PSI MINIMUM AT 28 DAYS, TYPE II PORTLAND CEMENT WITH WATER-CEMENT RATIO OF 0.40 TO 0.45. REFER TO SPECIFICATION 03300 FOR ADDITIONAL INFORMATION.
2. LOCATION OF CONSTRUCTION JOINTS SHALL BE APPROVED BY THE ENGINEER, IF NOT SHOWN ON DRAWINGS. CONSTRUCTION JOINTS SHALL BE ROUGH AND CLEAN. REMOVE LOOSE AGGREGATE AND DAMAGED CONCRETE.
3. PROVIDE 3/4 INCH CHAMFERS AT ALL EXPOSED EDGES.
4. FOR ADDITIONAL CONCRETE NOTES SEE TYPICAL DETAIL S101.
5. CONCRETE SLAB SHALL BE PLACED IN A LONG-STRIP CHECKERBOARD PATTERN, SEE SPECIFICATIONS.
6. VARY THE TOP COVER OVER REINFORCEMENT IN SLABS AND MATS TO ACHIEVE THE SLOPES THAT ARE INDICATED. IN CASE WHERE COVER OVER REINFORCEMENT EXCEEDS 3", SLOPE TOP BARS TO MATCH SLOPES INDICATED.
7. WHERE CONSTRUCTION JOINTS ARE NOT INDICATED ON THE PLANS & SECTIONS, PROVIDE CONSTRUCTION JOINTS IN SLABS & WALLS AT INTERVALS NOT GREATER THAN 35 FEET IN EACH DIRECTION, SEE TYPICAL DETAIL S110 WITH WATERSTOP, CONSTRUCTION JOINTS SHALL BE LOCATED AT LEAST 10 FT FROM AN ADJACENT WALL. SUBMIT FOR REVIEW PROPOSED CONSTRUCTION JOINT LAYOUT PLAN.
8. CONSTRUCTION JOINTS AT BEAM POCKETS IN WALLS SHALL BE ROUGHENED TO 1/4" AMPLITUDE.

FOUNDATION :

1. FOR GEOTECHNICAL DATA REFER TO REPORT BY : FUGRO CONSULTANTS, DATED : MAY 23, 2013, PROJECT NO. 04.6212.0178.
2. THE SUB GRADE SHALL BE PREPARED AS INDICATED IN THE SPECIFICATIONS AND DRAWINGS AND APPROVED BY THE ENGINEER BEFORE COMMENCING FOUNDATION CONSTRUCTION.
3. STARTER WALLS: FOR CONSTRUCTION JOINTS AT BASE OF ALL CONCRETE WALLS, REFER TO TYPICAL DETAIL S140/TYP.

REINFORCING STEEL :

1. REINFORCING STEEL SHALL BE DEFORMED BARS CONFORMING TO ASTM SPECIFICATION A615 GRADE 60.
2. PROVIDE SPACER BARS, SPREADERS, CHAIRS, BLOCKS, ETC., AS REQUIRED TO SECURELY HOLD STEEL IN PLACE.
3. MAINTAIN 3 INCHES MINIMUM CLEARANCE BETWEEN REINFORCING STEEL AND PIPELINES UNLESS OTHERWISE NOTED.
4. WELDED WIRE FABRIC SHALL CONFORM TO ASTM A185.
5. NO WELDING OF REINFORCEMENT BARS SHALL BE PERMITTED UNLESS DETAILED ON THE PLANS OR UNLESS APPROVAL IS OBTAINED FROM THE ENGINEER PRIOR TO CONSTRUCTION.
6. ALL REINFORCING STEEL SHALL BE LAP SPLICED PER TYPICAL DETAILS S101 UNO. ALL BARS SHALL BE DEVELOPED BEYOND POINT OF TERMINATION, AS SHOWN ON DRAWINGS. IF DEVELOPMENT LENGTH IS NOT SHOWN, WHETHER HOOKED OR STRAIGHT, DEVELOPMENT LENGTH SHALL BE PER ACI 318-08.
7. REINF. AT ALL CORNERS AND JUNCTIONS AS PER TYPICAL DETAIL S144 PLUS ANY ADD BARS SHOWN ON PLANS.
8. PROVIDE ADDITIONAL REINF AT OPENINGS AS PER TYPICAL DETAIL S180 UNO.

STEEL AND STAINLESS STEEL :

1. ALL MATERIAL AND WORK SHALL CONFORM TO THE AISC SPECIFICATION, LATEST EDITION, FOR THE DESIGN, FABRICATION AND ERECTION OF STRUCTURAL STEEL FOR BUILDINGS.
2. STRUCTURAL STEEL W-SHAPES SHALL CONFORM TO ASTM A992, GRADE 50. ALL OTHER SHAPES SHALL CONFORM TO ASTM A36, UNLESS NOTED OTHERWISE.
3. STRUCTURAL PIPE MEMBERS SHALL CONFORM TO ASTM A53, GRADE B.
4. STRUCTURAL TUBE MEMBERS SHALL CONFORM TO ASTM A500, GRADE B, FY=46 KSI.
5. STRUCTURAL STAINLESS STEEL SHALL CONFORM TO ASTM A276 FOR BARS AND SHAPES, TYPE 304 OR 316 (304L OR 316L FOR WELDED MATERIALS). ALL CONNECTORS ETC.
6. UNLESS DETAILED OTHERWISE, ALL CONNECTIONS SHALL BE MADE WITH 3/4 INCH DIAMETER HIGH STRENGTH BOLTS. HIGH STRENGTH BOLTS SHALL CONFORM TO ASTM A325 UNLESS NOTED OTHERWISE.
7. EACH CONNECTION SHALL HAVE A MINIMUM OF TWO BOLTS.
8. BOLT SPACING SHALL BE 3 INCHES, UNLESS NOTED OTHERWISE.
9. MINIMUM EDGE DISTANCE (DISTANCE FROM CENTER OF BOLT TO NEAREST EDGE OF PLATE OR STRUCTURAL ELEMENT) SHALL BE 1 1/2 INCHES FOR 3/4 INCH DIAMETER BOLTS UNLESS NOTED OTHERWISE.
10. ANCHOR BOLTS SHALL BE PER ASTM F1554 W/ A STANDARD HEAD, UNO.
11. ALL BOLTED STAINLESS STEEL CONNECTIONS SHALL CONSIST OF 316 STAINLESS STEEL BOLTS, NUTS, AND WASHERS.
12. ALL STEEL SHALL BE COATED PER SPEC 09960.

HOT-DIP GALVANIZING

1. ALL GALVANIZING SHALL BE PERFORMED AFTER FABRICATION AND IN ACCORDANCE WITH ASTM A123.
2. EXCEPT AS OTHERWISE SPECIFIED HEREIN, HOT-DIP GALVANIZING SHALL CONFORM TO THE REQUIREMENTS OF ASTM STANDARD A123/A123M-02 WITH AN AVERAGE WEIGHT PER SQUARE FOOT OF 2 OUNCES AND NOT LESS THAN 1.8 OUNCES PER SQUARE FOOT.
3. AREAS OF GALVANIZING DAMAGED BY WELDING OR BURNING, OR OTHERWISE DAMAGED, SHALL BE REPAIRED AND RECOATED.

WELDING STEEL :

1. WELDING SHALL BE DONE BY AWS ELECTRIC SHIELDED ARC PROCESS USING E-70XX ELECTRODES.
2. ALL WELDING SHALL BE PERFORMED BY AWS CERTIFIED WELDERS.
3. ALL WELDS SHALL BE MADE IN CONFORMANCE WITH THE LATEST EDITION OF THE STRUCTURAL WELDING CODE AWS D1.1 AND THE SPECIFICATION FOR CARBON STEEL ELECTRODES FOR SHIELDED METAL ARC WELDING, AWS A5.1. OF THE AMERICAN WELDING SOCIETY.
4. ALL FILLET WELDS SHALL BE A MINIMUM 3/16 INCH, IF NOT CALLED OUT.

GRATING :

1. ALL GRATING SHALL BE FASTENED W/ TYPICAL DETAIL A414.
2. FOR GRATING STOP SEE TYPICAL DETAIL A412.

ALUMINUM :

1. ALUMINUM CONSTRUCTION SHALL CONFORM TO THE LATEST EDITION OF THE ALUMINUM MANUAL OF THE ALUMINUM ASSOCIATION.
2. UNLESS OTHERWISE NOTED, STRUCTURAL ALUMINUM SHALL BE ALLOY 6061-T6 AS SPECIFIED IN ASTM B211 OR ASTM B221 FOR BARS, AND ASTM B308 FOR STRUCTURAL SHAPES.
3. WHERE ALUMINUM IS IN CONTACT WITH MASONRY OR CONCRETE SURFACES, CONTACT SURFACES SHALL BE COATED WITH HEAVY ALKALI-RESISTANT BITUMINOUS PAINT PER SPECIFICATIONS. WHERE ALUMINUM COMES IN CONTACT WITH DISSIMILAR METALS INCLUDING STAINLESS STEEL, SEPARATE OR ISOLATE IT FROM DISSIMILAR METALS WITH NEOPRENE GASKETS, SLEEVES, AND WASHERS.
4. EACH BOLTED CONNECTION SHALL HAVE MINIMUM OF TWO BOLTS.
5. BOLT SPACING SHALL BE 3 INCHES, UNO.

WELDING ALUMINUM :

1. WELDING ALUMINUM SHALL BE IN CONFORMANCE WITH AWS D1.2-90
2. WELDING SHALL BE DONE BY USING ER4043 ELECTRODES.
3. ALL WELDING SHALL BE CONTINUOUS AND SHALL BE 3/16" FILLET WELDS, UNO.
4. CONTINUOUS INSPECTION IS REQUIRED FOR WELDING OF STRUCTURAL ALUMINUM.

WELDING STAINLESS STEEL :

1. WELDING OF STAINLESS STEEL SHALL CONFORM WITH REQUIREMENTS OF AWS D1.6 LATEST EDITION, UNLESS OTHERWISE NOTED.
2. WELD ELECTRODES SHALL BE E308L-16 FOR 304/ 304L STAINLESS STEEL. WELD ELECTRODES SHALL BE E316 / E316L-15 FOR 316 / 316L STAINLESS STEEL.
3. SEE NOTE 4 UNDER WELDING STEEL.
4. WELDING OF ASTM A706 REINFORCING STEEL TO STAINLESS STEEL SHALL USE E309 / E304L ELECTRODES.

ROOF STEEL DECK & FLOOR DECK:

1. STEEL ROOF DECK PANELS SHALL BE 36 INCHES WIDE.
2. ALL DECKING SHALL BE HOT-DIP GALVANIZED.
3. THE MINIMUM END LAP SHALL BE THREE INCHES AND CENTERED OVER THE SUPPORTS. END BEARINGS SHALL BE A MINIMUM OF TWO INCHES.
4. FURNISH AND INSTALL CLOSURES AT DECK END, EDGES AND OPENINGS.
5. THERE SHALL BE NO LOADS SUSPENDED FROM METAL DECK UNLESS NOTED OTHERWISE.
6. THE DECK SHALL BE A MINIMUM OF THREE SPANS IN LENGTH.

WATERSTOPS :

1. SEE TYPICAL DETAILS S106 & S107 TYPICAL ALL DRAWINGS.

BACKFILL :

1. UNLESS OTHERWISE NOTED, BACKFILL SHALL NOT BE PLACED AGAINST WALLS UNTIL TOP SLAB HAS BEEN PLACED IN ITS ENTIRETY AND ALL CONCRETE HAS REACHED ITS DESIGN STRENGTH.

POST-INSTALLED ANCHORS AND EPOXY DOWELS :

1. FOR THE INSTALLATION OF POST-INSTALLED ANCHORS AND EPOXY DOWELS DO NOT CUT, DAMAGE NOR INTERRUPT EXISTING REBARS. CONTRACTOR SHALL USE NON-DESTRUCTIVE MEANS AS NECESSARY TO IDENTIFY LOCATION OF EXISTING REBARS.
2. PRIOR TO INSTALLATION OF EPOXY DOWELS, PREPARE CONCRETE PER TYPICAL DETAIL S194.
3. INSTALLATION PROCEDURE SHALL BE STRICTLY IN ACCORDANCE W/ MANUFACTURER'S INSTRUCTIONS AND INTERNATIONAL CODE COUNCIL ACCEPTANCE CRITERIA.
4. ALL POST-INSTALLED ANCHORS & EPOXY DOWELS SHALL BE SPECIALLY INSPECTED IN ACCORDANCE WITH THE CURRENT ICC-ES REPORT.

ADDITIONAL ABBREVIATIONS :

AB	ANCHOR BOLT
AL OR ALUM	ALUMINUM
BOT	BOTTOM
CI	CAST IRON
CJ	CONSTRUCTION JOINT
COL	COLUMN
CONT	CONTINUOUS
DO	DITTO
DWG(S)	DRAWING(S)
DWLS	DOWELS
EF	EACH FACE
EL	ELEVATION
EW	EACH WAY
FRP	FIBER REINFORECED PLASTIC
LLV	LONG LEG VERTICAL
MAX	MAXIMUM
MFR	MANUFACTURER
MIN	MINIMUM
PLCS	PLACES
REINF	REINFORCEMENT
SIM	SIMILAR
SQ	SQUARE
SSD	STRUCTURE SUBSURFACE DRAIN
SST	STAINLESS STEEL
T&B	TOP & BOTTOM
T.O.	TOP OF
TOC	TOP OF CONCRETE
TOG	TOP OF GRATING
TOS	TOP OF STEEL
TYP	TYPICAL
UNO	UNLESS NOTED OTHERWISE
WP	WORK POINT
WSTP	WATERSTOP

SPECIAL INSPECTION:

SPECIAL INSPECTION SHALL BE PROVIDED IN ACCORDANCE WITH SPECIFICATION SECTION 01455 AND CHAPTER 17 OF THE 2010 CBC.

CONCRETE MASONARY UNIT (CMU):

1. CONCRETE MASONARY UNITS SHALL COMPLY WITH THE REQUIREMENTS OF ASTM C90, GRADE N-1 WITH MINIMUM COMPRESSIVE STRENGTH OF 1900 PSI, AND SHALL BE NORMAL WEIGHT TYPE.
2. CORNER BOND BEAM, PILASTER, U-BLOCKS AND ACCESSORY UNITS OF THE SAME COLOR AND TEXTURE SHALL BE PROVIDED.
3. REINFORCEMENT FOR MASONARY SHALL BE SECURED IN PLACE IN CONFORMANCE WITH THE DRAWINGS AND APPLICABLE REQUIREMENTS OF THE 2010 CBC.
4. GROUTING: ALL CELLS SHALL BE SOLID GROUTED.
5. MIN LAP FOR ALL CMU REINFORCING BARS SHALL BE PER S400/TYP.
6. VERTICAL REINF. FOR WALLS SHALL BE CONTINUOUS FROM FLOOR TO TO ROOF WITHOUT SPLICE, USE OPEN END BLOCK AT VERTICAL REINF. BARS.
7. OWNER SHALL PROVIDE CONTINUOUS INSPECTION BY A QUALIFIED SPECIAL INPECTOR AS REQURIED FOR MASONRY CONSTRUCTION IN ACCORDANCE WITH THE 2010 CBC, CHAPTER 17.
8. ALL MASONRY SHALL CONFORM TO TYPICAL DETAILS S400/TYP, S410/TYP, S412/TYP, S430/TYP, S440/TYP.

DEFFERED DESIGN SUBMITTAL ITEMS:

1. OPEN WEB STEEL JOISTS.
2. FRP STORAGE TANKS.
3. FRP BEAM AND PEDESTAL FLOORS.

REV	DATE	BY	DESCRIPTION

DESIGNED CC
DRAWN PLN
CHECKED KWH
DATE SEPT 2013

REGISTERED PROFESSIONAL ENGINEER — JAMES K. WILLIAMS — No. 4466 — STRUCTURAL — STATE OF CALIFORNIA — 9/16/2013

carollo

SAN LUIS OBISPO COUNTY

SAN LUIS OBISPO COUNTY
LOS OSOS WATER RECYCLING FACILITY PROJECT
GENERAL
STRUCTURAL GENERAL NOTES

VERIFY SCALES
BAR IS ONE INCH ON ORIGINAL DRAWING
0 1"
IF NOT ONE INCH ON THIS SHEET, ADJUST SCALES ACCORDINGLY

JOB NO. 8930A.11
DRAWING NO. 00G10
SHEET NO. OF 549

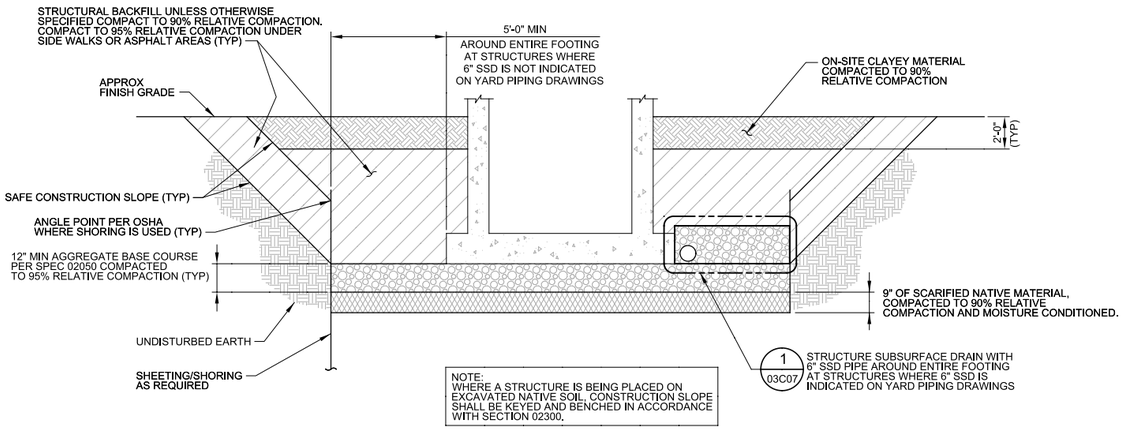

A - TYPICAL SECTION - BELOW GRADE STRUCTURES

SCALE: NTS
FILE:

* AREA 02 - POND INLET/OUTLET STRUCTURES
* AREA 04 - PLANT DRAIN PUMP STATION
* AREA 04 - STORM WATER PUMP STATION
* AREA 10 - HEADWORKS
* AREA 20 - OXIDATION DITCH
* AREA 21 - SECONDARY CLARIFIERS
* AREA 23 - SCUM PUMP STATION
* AREA 28 - FILTER INFLUENT PUMP STATION
* AREA 31 - UV FACILITY
* AREA 40 - EFFLUENT PUMP STATION
* AREA 50 - SLUDGE STORAGE TANKS
* AREA 51 - DEWATERING BUILDING

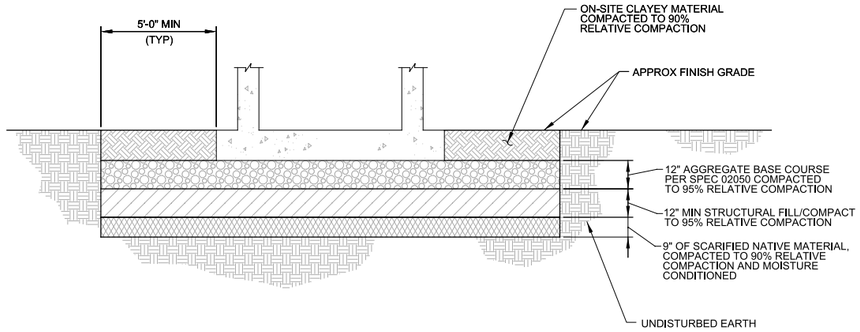

B - TYPICAL SECTION - AT OR NEAR GRADE STRUCTURES

SCALE: NTS
FILE:

* AREA 32 - CHEMICAL FACILITY

GENERAL NOTES:

1. PRIOR TO PLACING FILL, THE GEOTECHNICAL ENGINEER SHALL REVIEW AND VERIFY THE BOTTOM OF ALL EXCAVATIONS ARE SUITABLE FOR PLACING COMPACTED FILL.
2. LEGENDS:

CONCRETE
COMPACTED ON-SITE CLAYEY MATERIAL
STRUCTURAL BACKFILL
AGGREGATE BASE COURSE
SCARIFIED NATIVE MATERIAL
UNDISTURBED EARTH MATERIAL

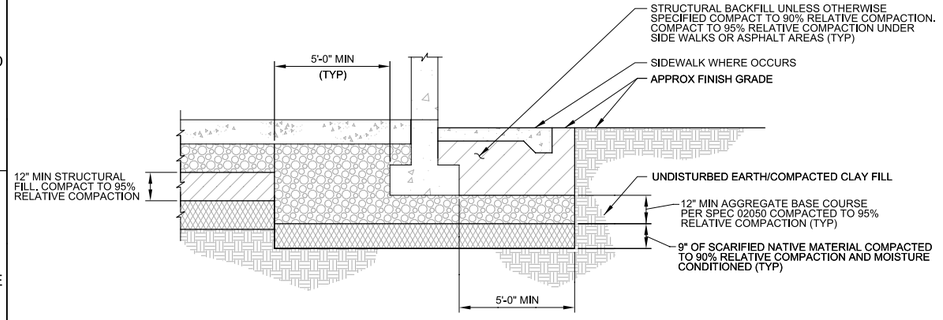

C - TYPICAL SECTION - AT WALL FOOTING

SCALE: NTS
FILE:

* AREA 03 - LOWRF ENTRANCE SIGN
* AREA 05 - ADMINISTRATION BUILDING
* AREA 06 - MAINTENANCE BUILDING
* AREA 70 - ELECTRICAL BUILDING

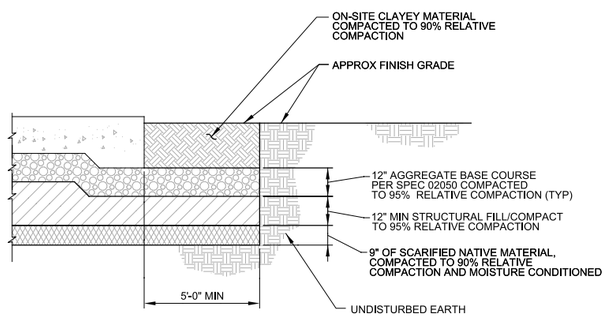

D - TYPICAL SECTION - AT SLAB ON GRADE

SCALE: NTS
FILE:

* AREA 02 - REW POND RAMPS
* AREA 02 - STORM WATER POND RAMP
* AREA 11 - ODOR CONTROL FACILITY
* AREA 28 - FILTER INFLUENT PUMP STATION
* AREA 30 - TERTIARY FILTERS
* AREA 40 - EFFLUENT PUMP STATION
* AREA 51 - DEWATERING BUILDING CAKE LOADING
* AREA 60 - EQUIPMENT SLAB & WATER TANK FOUNDATION

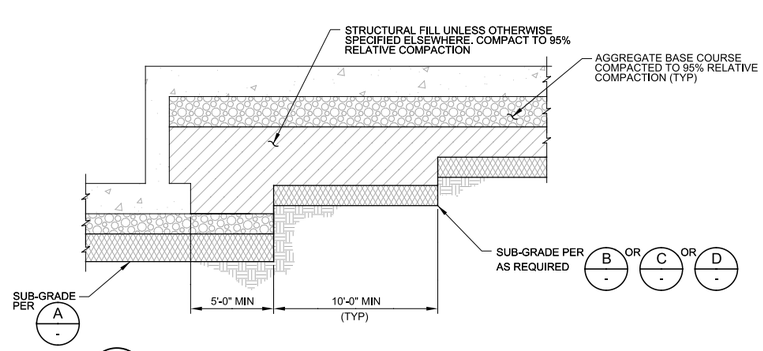

E - TYPICAL SECTION - STEPPED STRUCTURE

SCALE: NTS
FILE:

* AREA 10 - HEADWORKS
* AREA 20 - OXIDATION DITCH EFFLUENT/INFLUENT BOXES
* AREA 21 - SECONDARY CLARIFIERS
* AREA 31 - UV FACILITY
* AREA 51 - DEWATERING BUILDING

REV	DATE	BY	DESCRIPTION

DESIGNED CC
DRAWN PLN
CHECKED KWH
DATE SEPT 2013

REGISTERED PROFESSIONAL ENGINEER — JAMES A. DOBKINS — No. 4466 — STRUCTURAL — STATE OF CALIFORNIA — 9/16/2013

carollo

SAN LUIS OBISPO COUNTY

SAN LUIS OBISPO COUNTY
LOS OSOS WATER RECYCLING FACILITY PROJECT
GENERAL
STRUCTURAL TYPICAL SECTIONS

VERIFY SCALES
BAR IS ONE INCH ON ORIGINAL DRAWING
0 1"
IF NOT ONE INCH ON THIS SHEET, ADJUST SCALES ACCORDINGLY

JOB NO. 8930A.11
DRAWING NO. 00G11
SHEET NO. OF 549

PROJECT NO. 8930A.11 FILE NAME: 8930A11-00G11.dgn

LAST SAVED BY: ddonk Model: Layout1 ColorTable: gshade.ctb DesignScript: Carollo_Std_Pen_v0905.pen PlotScale: 2:1 Plot Date: 16-SEP-2013 5:30:53 PM User: DDonk

EQUIPMENT NAME	EQUIPMENT NUMBER
AREA 3 - REW POND STRUCTURES	
SECONDARY CLARIFIER NO. 1 DRAIN GATE	03-GAT-111A
SECONDARY CLARIFIER NO. 2 DRAIN GATE	03-GAT-112A
SECONDARY CLARIFIER DRAIN MANHOLE	03-GAT-110
REW POND NO. 1 INLET GATE	03-EDR-321
REW POND NO. 2 INLET GATE	03-EDR-324
REW POND NO. 1 INLET GATE FROM POND 3	03-GAT-322
REW POND NO. 1 INLET GATE FROM POND 3 (FUTURE)	03-EDR-322
REW POND NO. 1 OUTLET GATE	03-EDR-323
REW POND NO. 2 OUTLET GATE	03-EDR-325
AREA 3 - OTHER	
MAIN ENTRANCE GATE	05-GAT-820
SERVICE ENTRANCE GATE	06-GAT-840
AREA 4 - PLANT DRAIN PUMP STATION	
PLANT DRAIN PUMP NO. 1	04-PMP-501
PLANT DRAIN PUMP NO. 1 VFD	04-VFD-501
PLANT DRAIN PUMP NO. 2	04-PMP-502
PLANT DRAIN PUMP NO. 2 VFD	04-VFD-502
AREA 4 - STORM WATER PUMP STATION	
STORM WATER PUMP NO. 1	04-PMP-601
STORM WATER PUMP NO. 2	04-PMP-602
AREA 10 - HEADWORKS	
SCREEN NO. 1	10-BSR-040
SCREEN INLET GATE NO. 1	10-EDR-041
SCREEN OUTLET GATE NO. 1	10-EDR-042
SCREEN NO. 2	10-BSR-050
SCREEN INLET GATE NO. 2	10-EDR-051
SCREEN OUTLET GATE NO. 2	10-EDR-052
SCREENINGS COMPACTOR NO. 1	10-VCP-044
SCREENINGS COMPACTOR NO. 2	10-VCP-054
AREA 11 - ODOR CONTROL FACILITY	
ODOR CONTROL FAN NO. 1	11-FAN-071
ODOR CONTROL FAN NO. 2	11-FAN-072
AREA 20 - OXIDATION DITCHES	
OXIDATION DITCH NO. 1 INFLUENT GATE NO. 1	20-GAT-081
OXIDATION DITCH NO. 1 INFLUENT GATE NO. 2	20-GAT-082
OXIDATION DITCH NO. 1 RAS GATE NO. 1	20-GAT-083
OXIDATION DITCH NO. 1 RAS GATE NO. 2	20-GAT-084
OXIDATION DITCH NO. 2 INFLUENT GATE NO. 1	20-GAT-085
OXIDATION DITCH NO. 2 INFLUENT GATE NO. 2	20-GAT-086
OXIDATION DITCH NO. 2 RAS GATE NO. 1	20-GAT-087
OXIDATION DITCH NO. 2 RAS GATE NO. 2	20-GAT-088
OXIDATION DITCH NO. 1 INLET GATE	20-GAT-096
OXIDATION DITCH NO. 2 INLET GATE	20-GAT-106
ANOXIC MIXER NO. 1	20-MIX-090
ANOXIC MIXER NO. 2	20-MIX-100
MECHANICAL AERATOR NO.1	20-AER-091
MECHANICAL AERATOR NO.1 VFD	20-VFD-091
MECHANICAL AERATOR NO.2	20-AER-092
MECHANICAL AERATOR NO.2 VFD	20-VFD-092
MECHANICAL AERATOR NO.3	20-AER-101
MECHANICAL AERATOR NO.3 VFD	20-VFD-101
MECHANICAL AERATOR NO.4	20-AER-102
MECHANICAL AERATOR NO.4 VFD	20-VFD-102
MIX LIQUOR SPLITTER WEIR GATE NO. 1	20-EDM-094
MIX LIQUOR SPLITTER WEIR GATE NO. 2	20-EDM-104
SECONDARY CLARIFIER NO. 1 INFLUENT GATE	20-GAT-107
SECONDARY CLARIFIER NO. 2 INFLUENT GATE	20-GAT-108
AREA 21 - SECONDARY CLARIFIERS	
SECONDARY CLARIFIER NO. 1 DRIVE	21-CLR-111
SECONDARY CLARIFIER NO. 2 DRIVE	21-CLR-112
SECONDARY CLARIFIER NO. 1 BASKET HOIST	21-HOI-111
SECONDARY CLARIFIER NO. 2 BASKET HOIST	21-HOI-112
SECONDARY CLARIFIER NO. 1 EFFLUENT GATE	21-GAT-107
SECONDARY CLARIFIER NO. 2 EFFLUENT GATE	21-GAT-108
AREA 23 - SCUM PUMP STATION	
SECONDARY SCUM PUMP NO. 1	23-PMP-131
SECONDARY SCUM PUMP NO. 2	23-PMP-132
SCUM MIXING VALVE	23-EDR-130
SECONDARY CLARIFIER NO. 1 SCUM GATE	23-GAT-134
SECONDARY CLARIFIER NO. 2 SCUM GATE	23-GAT-135
AREA 28 - FILTER INFLUENT PUMP STATION	
FILTER INFLUENT PUMP NO. 1	28-PMP-181
FILTER INFLUENT PUMP NO. 1 VFD	28-VFD-181
FILTER INFLUENT PUMP NO. 2	28-PMP-182
FILTER INFLUENT PUMP NO. 2 VFD	28-VFD-182
FILTER INFLUENT PUMP NO. 3	28-PMP-183
FILTER INFLUENT PUMP NO. 3 VFD	28-VFD-183
FLITER INFLUENT PUMP NO. 4	28-PMP-184
FLITER INFLUENT PUMP NO. 4 VFD	28-VFD-184
FLASH MIX PUMP NO. 1	28-PMP-185
FLASH MIX PUMP NO. 2	28-PMP-186
PLANT WATER SUPPLEMENTAL FLOW VALVE	28-EAM-188
FILTER INFLUENT PUMP STATION WETWELL NO. 1 GATE	28-GAT-188A
FILTER INFLUENT PUMP STATION WETWELL NO. 2 GATE	28-GAT-188B

EQUIPMENT NAME	EQUIPMENT NUMBER
AREA 30 - TERTIARY FILTERS	
TERTIARY FILTER NO. 1	30-VCP-210
TERTIARY FILTER NO. 2	30-VCP-220
TERTIARY FILTER NO. 1 INLET VALVE	30-EDR-211
TERTIARY FILTER NO. 2 INLET VALVE	30-EDR-221
AREA 31 - UV FACILITY	
TERTIARY FILTER TO WASTE VALVE	31-EDR-240
UV DISINFECTION CHANNEL NO. 1 INLET VALVE	31-EDM-244
UV DISINFECTION CHANNEL NO. 1 UV BANK 1-1	31-UVPDC-241A
UV DISINFECTION CHANNEL NO. 1 UV BANK 1-2	31-UVPDC-241B
UV DISINFECTION CHANNEL NO. 1 UV BANK 1-3	31-UVPDC-241C
UV CHANNEL NO. 1 PW RE-FILL VALVE	31-EDR-247
UV DISINFECTION CHANNEL NO. 2 INLET VALVE	31-EDM-245
UV DISINFECTION CHANNEL NO. 2 UV BANK 2-1	31-UVPDC-242A
UV DISINFECTION CHANNEL NO. 2 UV BANK 2-2	31-UVPDC-242B
UV DISINFECTION CHANNEL NO. 2 UV BANK 2-3	31-UVPDC-242C
UV CHANNEL NO. 2 PW RE-FILL VALVE	31-EDR-248
UV DISINFECTION CHANNEL NO. 3 INLET VALVE	31-EDM-246
UV DISINFECTION CHANNEL NO. 3 UV BANK 3-1	31-UVPDC-243A
UV DISINFECTION CHANNEL NO. 3 UV BANK 3-2	31-UVPDC-243B
UV DISINFECTION CHANNEL NO. 3 UV BANK 3-3	31-UVPDC-243C
UV CHANNEL NO. 3 PW RE-FILL VALVE	31-EDR-249
MONORAIL NO. 1	31-HOI-241
AREA 32 - CHEMICAL FACILITY	
ALUM PUMP NO. 1	32-PMP-271
ALUM PUMP NO. 2	32-PMP-272
SODIUM HYPOCHLORITE PUMP NO. 1	32-PMP-281
SODIUM HYPOCHLORITE PUMP NO. 2	32-PMP-282
SODIUM HYPOCHLORITE PUMP NO. 3	32-PMP-283
SODIUM HYPOCHLORITE PUMP NO. 4	32-PMP-284
SODIUM HYPOCHLORITE PUMP NO. 5	32-PMP-285
POTABLE WATER SYSTEM SODIUM HYPOCHLORITE FEED VALVE	32-EDR-281B
CLARIFIER NO. 1 SODIUM HYPOCHLORITE FEED VALVE	32-EDR-281C
CLARIFIER NO. 2 SODIUM HYPOCHLORITE FEED VALVE	32-EDR-281D
AREA 40 - EFFLUENT PUMP STATION	
EFFLUENT PUMP NO. 1	40-PMP-301
EFFLUENT PUMP NO. 2	40-PMP-302
EFFLUENT PUMP NO. 3	40-PMP-303
EFFLUENT PUMP NO. 4	40-PMP-304
AREA 50 - SLUDGE STORAGE TANKS	
RAS SUCTION VALVE NO. 1	50-EAM-124
RAS SUCTION VALVE NO. 2	50-EAM-125
RAS/WAS PUMP NO. 1	50-PMP-121
RAS/WAS PUMP NO. 1 VFD	50-VFD-121
RAS/WAS PUMP NO. 2	50-PMP-122
RAS/WAS PUMP NO. 2 VFD	50-VFD-122
RAS/WAS PUMP NO. 3	50-PMP-123
RAS/WAS PUMP NO. 3 VFD	50-VFD-123
WAS DISCHARGE VALVE	50-EAM-127
WAS ISOLATION VALVE NO. 1	50-EAM-128
WAS ISOLATION VALVE NO. 2	50-EAM-129
SLUDGE AERATION BLOWER NO. 1	50-BLO-401
SLUDGE AERATION BLOWER NO. 2	50-BLO-402
SLUDGE AERATION BLOWER NO. 3	50-BLO-403
BLOWER NO. 1 DISCHARGE VALVE	50-EDR-404
BLOWER NO. 2 DISCHARGE VALVE	50-EDR-405
BLOWER NO. 3 DISCHARGE VALVE	50-EDR-406
BLOWER CROSS-TIE VALVE NO. 1	50-EDR-407
BLOWER CROSS-TIE VALVE NO. 2	50-EDR-408
DEWATERING FEED PUMP NO. 1	50-PMP-423
DEWATERING FEED PUMP NO. 1 VFD	50-VFD-423
DEWATERING FEED PUMP NO. 2	50-PMP-427
DEWATERING FEED PUMP NO. 2 VFD	50-VFD-427
DEWATERING INLET VALVE NO. 1	50-EDR-421
DEWATERING OUTLET VALVE NO. 1	50-EDR-424
DEWATERING INLET VALVE NO. 2	50-EDR-425
DEWATERING OUTLET VALVE NO. 2	50-EDR-428
SLUDGE STORAGE TANK NO. 1 DEWATERING FEED VALVE	50-EDR-417
SLUDGE STORAGE TANK NO. 2 DEWATERING FEED VALVE	50-EDR-418
SLUDGE STORAGE TANK NO. 1 WAS FEED VALVE	50-EDR-411
SLUDGE STORAGE TANK NO. 2 WAS FEED VALVE	50-EDR-412
DEWATERING FEED GRINDER NO. 1	50-GRI-422
DEWATERING FEED GRINDER NO. 2	50-GRI-426
SLUDGE STORAGE TANK NO. 1 WEIR GATE NO. 1	50-EDM-413
SLUDGE STORAGE TANK NO. 1 WEIR GATE NO. 2	50-EDM-414
SLUDGE STORAGE TANK NO. 2 WEIR GATE NO. 1	50-EDM-415
SLUDGE STORAGE TANK NO. 2 WEIR GATE NO. 2	50-EDM-416
SLUDGE STORAGE TANK EQ GATE	50-GAT-419
SLUDGE STORAGE SUMP PUMP NO. 1	50-PMP-419A
SLUDGE STORAGE SUMP PUMP NO. 2	50-PMP-419B

EQUIPMENT NAME	EQUIPMENT NUMBER
AREA 51 - DEWATERING BUILDING	
DEWATERING SCREW PRESS NO. 1	51-PRE-431
DEWATERING SCREW PRESS NO. 2	51-PRE-432
CAKE CONVEYOR NO. 1	51-CNV-433
CAKE CONVEYOR NO. 2	51-CNV-434
DEWATERING POLYMER BLENDING UNIT 1	51-PBU-451
DEWATERING POLYMER BLENDING UNIT 2	51-PBU-452
SECONDARY TREATMENT POLYMER FEED SYSTEM	51-PBU-453
MONORAIL HOIST NO. 1	51-HOI-431
MONORAIL HOIST NO. 2	51-HOI-432
SCREW PRESS AIR COMPRESSOR NO. 1 (POWERED BY VCP)	51-ARC-431
SCREW PRESS AIR COMPRESSOR NO. 2 (POWERED BY VCP)	51-ARC-432
SUPPLY FAN NO. 1	51-SF-477
EXHAUST FAN NO. 1	51-EF-471
EXHAUST FAN NO. 2	51-EF-472
EXHAUST FAN NO. 3	51-EF-473
EXHAUST FAN NO. 4	51-EF-474
EXHAUST FAN NO. 5	51-EF-475
EXHAUST FAN NO. 6	51-EF-476
ELECTRICAL ROOM AC UNIT, 12.5 TONS	51-ACU-470
ROLL-UP DOOR NO. 1 DRIVE	51-DRV-478A
ROLL-UP DOOR NO. 2 DRIVE	51-DRV-478B
ROLL-UP DOOR NO. 3 DRIVE	51-DRV-478C
AREA 60 - WATER STORAGE TANK	
NON-POTABLE WATER PRESSURIZATION PUMP NO. 1	60-PMP-731
NON-POTABLE WATER PRESSURIZATION PUMP NO. 2	60-PMP-732
NON-POTABLE WATER PRESSURIZATION PUMP NO. 3	60-PMP-733
POTABLE WATER PRESSURIZATION PUMP NO. 1	60-PMP-761
POTABLE WATER PRESSURIZATION PUMP NO. 2	60-PMP-762
POTABLE WATER PRESSURIZATION PUMP NO. 3	60-PMP-763
GROUND WATER WELL PUMP NO. 1	60-PMP-711
GROUND WATER WELL PUMP NO. 2	60-PMP-712
NON-POTABLE WATER STORAGE INLET VALVE	60-EDR-713
POTABLE WATER STORAGE INLET VALVE	60-EDR-760
RESERVOIR MIXER	60-MIX-714
AREA 70 - ELECTRICAL BUILDING	
ELECTRICAL ROOM AC UNIT, 7.5 TONS	70-ACU-800
FIRE PUMP	70-PMP-720
JOCKEY PUMP	70-PMP-721
GENERATOR ROOM EXHAUST FAN NO. 1	70-EF-801
GENERATOR ROOM EXHAUST FAN NO. 2	70-EF-802
FIRE PUMP ROOM EXHAUST FAN NO. 1	70-EF-721
GENERATOR LOAD BANK	70-LB-734
EMERGENCY GENERATOR	70-GEN-805
FIRE PUMP ROOM UNIT HEATER	70-HTR-722

GENERAL NOTES

1. THIS DRAWING IS PROVIDED FOR INFORMATIONAL PURPOSES ONLY.
2. THIS SCHEDULE DOES NOT CONTAIN EQUIPMENT IN ADMINISTRATION AND MAINTENANCE BUILDINGS.

REV	DATE	BY	DESCRIPTION

DESIGNED HGK
DRAWN DBJ
CHECKED
DATE SEPT 2013

REGISTERED PROFESSIONAL ENGINEER — ALAN GIL KANDOW — No. 62686 — CIVIL — STATE OF CALIFORNIA — 9/16/2013

carollo

SAN LUIS OBISPO COUNTY

SAN LUIS OBISPO COUNTY
LOS OSOS WATER RECYCLING FACILITY PROJECT
GENERAL
EQUIPMENT SCHEDULE

VERIFY SCALES
BAR IS ONE INCH ON ORIGINAL DRAWING
0 1"
IF NOT ONE INCH ON THIS SHEET, ADJUST SCALES ACCORDINGLY

JOB NO. 8930A.11
DRAWING NO. 00G12
SHEET NO. OF 549

PROJECT NO. 8930A.11 FILE NAME: 8930A11-00G12.dgn

Plot Date: 16-SEP-2013 5:31:04 PM
User: DDonk
PlotScale: 2:1
DesignScript: Carollo_Std_Pen_v0905.pen
ColorTable: gshade.ctb
Model: Layout1
LAST SAVED BY: ddonk

KEY NOTES

1. PG&E ELECTRICAL TRANSMISSION TOWERS.
2. APPROX. 10,500 SF OF SPACE SHOWN.
3. APPROX. 140,800 SF OF SPACE SHOWN.
4. DESIGNATED ENVIRONMENTALLY SENSITIVE HABITAT AREA.
5. STAGING AREA FOR LOS OSOS COLLECTION SYSTEM PROJECT
6. MINIMUM SETBACK FROM KEY NOTE 1
7. DESIGNATED OFFICE FOR CONSTRUCTION MANAGER
8. PRIOR TO CONSTRUCTION ACTIVITIES, SET PROTECTIVE FENCING (TYPE ESA) FOR PROTECTING SENSITIVE AREAS. SET FENCING 1 FOOT OUTSIDE OF; THE PROPERTY LINE; SETBACK LIMIT FROM DESIGNATED ENVIRONMENTALLY SENSITIVE HABITAT AREAS; AND OTHER INDICATED AREAS.
9. PROTECT BASES OF KEY NOTE 1 WITH TEMPORARY FENCE.
10. MAINTAIN TEMPORARY FENCE WITH VEHICULAR GATES TO SECURE PROJECT SITE THROUGHOUT CONSTRUCTION.

AGENCY CONTACT INFORMATION

WATER

LOCSD
MARGARET FALKNER
2122 9TH ST. P.O. BOX 6064
LOS OSOS, CA 93412
(805) 528-9370

GOLDEN STATE WATER CO.
MARK ZIMMER
1140 LOS OLIVOS
LOS OSOS, CA 93402
(805) 528-2287

S&T MUTUAL WATER CO.
BILL GARFINKEL
P.O. BOX 6391
LOS OSOS, CA 93412
(805) 801-3138

STORM DRAINS

COUNTY OF SAN LUIS OBISPO
DEPARTMENT OF PUBLIC WORKS
COUNTY GOVERNMENT CENTER
ROOM 207
SAN LUIS OBISPO, CA 93408
(805) 781-5252

GAS

THE GAS COMPANY
CLAUDIA TURNER
1171 MORE RD. (PHYSICAL)
P.O. BOX 818 (MAINLING)
GOLETA, CA 93116-0818
(805) 681-8024

ELECTRIC

PG&E
JAMES HAAS
4325 S. HIGUERA ST.
SAN LUIS OBISPO, CA 93401
(805) 546-5234

FIRE DEPARTMENT

CAL FIRE/SAN LUIS OBISPO COUNTY
FIRE DEPARTMENT
SOUTH BAY STATION #15
CHIEF ROBERT LEWIN
2315 BAYVIEW HEIGHTS DR.
LOS OSOS, CA 93402
(805) 528-1053

PHONES/FIBER OPTIC

TERRADEX
PETER BIFFAR
855 EL CAMINO REAL
SUITE 311
PALO ALTO, CA 94301
(877) 577-4111 (EX 100)

LEVEL 3 COMMUNICATIONS
SCOTT MATTINGLY
818 W. 17TH ST
SUITE 1110
LOS ANGELES, CA 90017
(213) 996-9869

ATT/SBC/PACBELL
STEVE PLEMONS
908 28TH STREET
PASO ROBLES, CA 93446
(805) 237-8131

AT&T LEGACY
JOSEPH FORKET
22311 BROOKHURST ST. SUITE 203
HUNTINGTON BEACH, CA 92646
(714) 963-7964

AT&T TRUNK & TOLL
EMILIO DIAZ
5555 E OLIVE AVE
FRESNO, CA 93727-2559
(559) 454-3435

AT&T LOCAL EXCHANGE
CHRIS BOTTALICO
196 SUBURBAN ROAD
SAN LUIS OBISPO, CA 93401
(805) 234-7480

CHARTER COMMUNICATIONS
TIM LINDSAY
270 BRIDGE ST.
SAN LUIS OBISPO, CA 93401
(805) 431-3047

QWEST/CENTURYLINK
TERRY CARMER
4090 LEAVERTON CT
ANAHEIM, CA 92708
(714) 666-9219

SPRINT-NEXTEL
TIBOR LAKY
2592 DUPONT DRIVE
IRVINE, CA 92612
(949) 842-9870

VERIZON - MCI
DEAN BOYERS
2400 N. GLENVILLE DRIVE
RICHARSON, TX 75082
(972) 729-6322

REV	DATE	BY	DESCRIPTION

DESIGNED HGK
DRAWN GAT
CHECKED KWH
DATE SEPT 2013

REGISTERED PROFESSIONAL ENGINEER — BRIAN GIL KATONER — No. 62686 — CIVIL — STATE OF CALIFORNIA — 9/16/2013

carollo

SAN LUIS OBISPO COUNTY

SAN LUIS OBISPO COUNTY
LOS OSOS WATER RECYCLING FACILITY PROJECT
GENERAL
STAGING PLAN AND AGENCY CONTACT INFORMATION

VERIFY SCALES
BAR IS ONE INCH ON ORIGINAL DRAWING
0 1"
IF NOT ONE INCH ON THIS SHEET, ADJUST SCALES ACCORDINGLY

JOB NO. 8930A.11
DRAWING NO. 00G13
SHEET NO. OF 549

Plot Date: 16-SEP-2013 5:31:15 PM
User: DDonk
PlotScale: 2:1
DesignScript: Carollo_Std_Pen_v0905.pen
ColorTable: gshade.ctb
Model: Layout1
LAST SAVED BY: ddonk

PROJECT NO. 8930A.11 FILE NAME: 8930A11-00G13.dgn

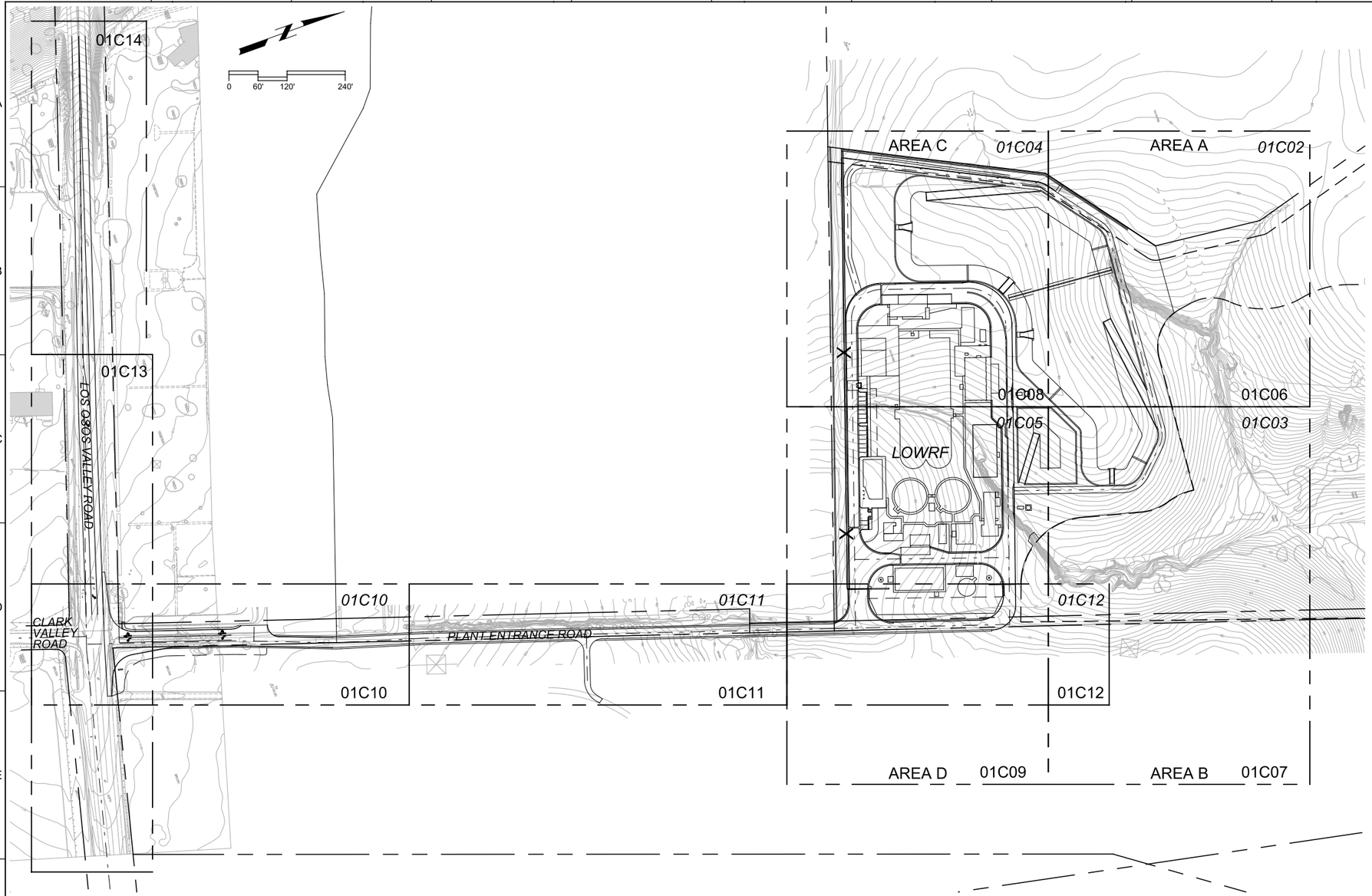

GENERAL NOTES

1. GENERAL NOTES APPLY TO ALL CIVIL DRAWINGS.
2. UTILITY NOTIFICATION - PRIOR TO BEGINNING ANY EARTHWORK, THE CONTRACTOR SHALL BE RESPONSIBLE FOR CONTACTING ALL AGENCIES INVOVLVED AND SHALL LOCATE ALL FACILITIES PRIOR TO EXCAVATION IN ANY AREA. THE CONTRACTOR SHALL CAL DIG ALERT (USA), TOLL FREE AT 1-800-642-2444 AT LEAST 48 HOURS PRIOR TO THE START OF CONSTRUCTION.
3. EXISTING UTILITIES - THE LOCATIONS AND ELEVATIONS OF EXISTING UTILITIES WHERE SHOWN ON THE PLANS ARE BASED ON AVAILABLE RECORDS, AND ARE APPROXIMATE ONLY. THE CONTRACTOR AGREES THAT HE SHALL ASSUME SOLE AND COMPLETE RESPONSIBILITY FOR LOCATING OR HAVING LOCATED ALL UNDERGROUND UTILITIES AND OTHER FACILITIES. THE CONTRACTOR SHALL ALSO ASSUME SOLE AND COMPLETE RESPONSIBILITY FOR PROTECTING THE SAME DURING THE COURSE OF CONSTRUCTING THE PROJECT. ANY DEVIATIONS FROM THE PLAN LOCATION OF ANY EXISTING FACILITIES SHALL BE IMMEDIATELY BROUGHT TO THE ATTENTION OF THE COUNTY INSPECTOR.
4. ALL STATIONING SHOWN IS APPROXIMATE. VERIFY LENGTHS IN FIELD PRIOR TO FABRICATION OF PIPING AND SUBMIT SHOP DRAWINGS FOR REVIEW.
5. OVERALL SCHEDULE REQUIREMENT FOR THE PROJECT MAY MANDATE SHORING TO BE IMPLEMENTED DURING CONSTRUCTION.
6. ALL STRUCTURAL COORDINATES ARE TO OUTSIDE CORNER OF COLUMN OR BUILDING WALL UNLESS OTHERWISE NOTED.
7. ALL PIPING EXTERIOR TO THE LIMITS OF EXCAVATION FOR STRUCTURES SHALL BE TRENCHED PER TYPICAL DETAL P002 AND THE SPECIFICATIONS, UNO.
8. UNLESS SHOWN OTHERWISE, THE MINIMUM COVER OR BURY FROM FINISH GRADE TO TOP OF PIPE SHALL BE 3 FOOT DEPTH TO TOP OF PIPE AND SHALL BE VARIED TO AVOID INTERFERENCE UP TO 6 FEET AT NO ADDITIONAL COST TO THE OWNER.
9. ALL BURIED VALVES SHALL BE INSTALLED IN VALVE BOXES PER TYPICAL DETAILS P022 AND P026.
10. VALVES THAT ARE MADE OF PLASTIC SHALL NOT BE USED IN BURIED APPLICATIONS EXCEPT FOR IRRIGATION SERVICE.
11. AVOID HIGH POINTS IN BURIED PIPING. WHERE UNAVOIDABLE, PROVIDE AIR RELIEF VALVES.
12. UNLESS OTHERWISE INDICATED ON THE DRAWINGS, ALL PIPING SHALL HAVE A MINIMUM OF 12" VERTICAL AND HORIZONTAL CLEARANCE FROM NEAREST PIPELINE.
13. UNLESS OTHERWISE INDICATED, ALL POTABLE WATER LINES INCLUDING FIRE WATER SHALL BE INSTALLED A MINIMUM OF 10 FT HORIZONTALLY FROM AND 1 FT HIGHER THAN ALL NON-POTABLE LINES LOCATED PARALLEL TO THE POTABLE WATER LINES.
14. UNLESS OTHERWISE INDICATED, ALL POTABLE WATER LINES INCLUDING FIRE WATER SHALL BE INSTALLED A MINIMUM OF 1 FT HIGHER THAN ALL NON-POTABLE LINES CROSSING THE POTABLE WATER LINES.
15. TRACER WIRE SHALL BE PROVIDED IN ACCORDANCE WITH THE SPECIFICATIONS FOR ALL BURIED PIPING.
16. BURIED PIPING SHALL HAVE UNDERGROUND WARNING AND LOCATION TAPE.
17. UNLESS SPECIFIED OTHERWISE IN PIPE SCHEDULE, ALL BURIED DUCTILE IRON PIPING SHALL BE SELF-RESTRAINING. MECHANICAL RESTRAINT SYSTEMS THAT RELY ON HARNESS LUGS AND RODS ARE NOT ACCEPTABLE.
18. ALL PIPING JOINTS SHALL BE MECHANICALLY RESTRAINED TYPE JOINTS OR PUSH-ON RESTRAINED TYPE JOINTS, EXCEPT GRAVITY DRAIN PIPING IN CONCRETE ENCASEMENT, SUCH PIPING MAY BE UNRESTRAINED. THE USE OF THRUST BLOCKS IS NOT ACCEPTABLE.
19. CONCRETE-ENCASE PIPING LOCATED BENEATH STRUCTURES, CONCRETE SLABS, TRUCK PADS, AND SIDEWALKS PER TYPICAL DETAIL P040, WHETHER ENCSEMENT IS SHOWN OR NOT. HORIZONTALLY EXTEND CONCRETE ENCASEMENT BEYOND EDGE OF CONCRETE BY A DISTANCE EQUAL TO THE VERTICAL DISTANCE FROM UNDERSIDE OF CONCRETE TO TOP OF PIPE.
20. CONTRACTOR SHALL INCLUDE IN THE BASE BID 40 GUARD POSTS IN ADDITION TO THOSE CALLED OUT ON PLANS OR REQUIRED FOR FIRE HYDRANTS, INSTALLED PER TYPICAL DETAIL C161. LOCATIONS SHALL BE DETERMINED IN THE FIELD BY OWNER PRIOR TO FINAL PAVING AND GRADING.
21. PRIOR TO HYDROSTATIC TESTING, CONTRACTOR SHALL HAVE EACH PIPING SYSTEM PROPERLY RESTRAINED.
22. THE CONTRACTOR SHALL MAINTAIN AT ALL TIMES ADEQUATE DRAINAGE PATTERNS AT THE SITE. WATER SHALL NOT BE ALLOWED TO POND OR STAND DUE TO CONTRACTOR'S ACTIVITIES.
23. SEE SECTION 01140 AND OTHER APPLICABLE SECTIONS FOR WORK RESTRICTIONS AND CONSTRAINTS.
24. SEE SECTION 01060 FOR REGULATORY AGENCY REQUIREMENTS INCLUDING APPLICABLE COASTAL DEVELOPMENT PERMIT CONDITIONS. SEE SECTION 01561 FOR CONTROL OF BIOLOGICAL AND CULTURAL RESOURCES.
25. LOCATE AND PRESERVE EXISTING SURVEY MONUMENTS PER SECTION 00700. REFER TO RECORD OF SURVEY INCLUDED IN APPENDICES FOR THEIR LOCATIONS.
26. SEE FINAL GEOTECHNICAL REPORT PREPARED BY FUGRO FOR EXPLORED BORING LOCATIONS.
27. PROVIDE TYPE A GRAVEL WHERE CONSTRUCTION TRAFFIC MAY OTHERWISE IMPACT SUBSURFACE STABILITY.
28. REMOVE SURPLUS SOIL FROM PROJECT SITE.

CATHODIC PROTECTION NOTES

BURIED DUCTILE IRON PIPING:

1. CATHODIC PROTECTION NOTES APPLY TO ALL CIVIL DRAWINGS.
2. BOND ALL PIPE JOINTS AND ASSOCIATED FITTINGS PER TYP DETAIL D036 TO PROVIDE ELECTRICAL CONTINUITY. SUBMIT AND OBTAIN ENGINEER'S APPROVAL OF BOND JUMPER SYSTEM PRIOR TO INSTALLATION. RECTIFY IMPROPER INSTALLATION AT NO ADDITIONAL COST TO THE OWNER.
3. INSTALL INSULATED FLANGES AT CONNECTIONS TO STRUCTURES, AND AT ABOVE GROUND CONNECTIONS PER TYP DETAIL D062. INSTALL TEST STATION AT BURIED INSULATING FLANGES PER TYP DETAIL D002. PROVIDE REFERENCE ELECTRODE AT ALL TEST STATIONS.
4. ENCASE ALL DUCTILE IRON PIPING AND ASSOCIATED FITTINGS IN TWO LAYERS OF LOOSE POLYETHYLENE WRAP PER SPECIFICATIONS

GENERAL CIVIL DRAWING LEGEND

X 75.50 — EXIST FINISHED SURFACE/SPOT ELEVATION

XXXX — NEW FINISHED GRADE

XXXXX — GRADING PLAN DWG No.

DRAWING LIMITS

XXXXX — YARD PIPING PLAN DWG No.

REV	DATE	BY	DESCRIPTION

DESIGNED HGK
DRAWN GAT
CHECKED RLG
DATE SEPT 2013

REGISTERED PROFESSIONAL ENGINEER — KEVIN GIL KADING — No. 62686 — CIVIL — STATE OF CALIFORNIA — 9/16/2013

carollo

SAN LUIS OBISPO COUNTY

SAN LUIS OBISPO COUNTY

LOS OSOS WATER RECYCLING FACILITY PROJECT

CIVIL

KEY MAP AND GENERAL NOTES

VERIFY SCALES
BAR IS ONE INCH ON ORIGINAL DRAWING
0 1"
IF NOT ONE INCH ON THIS SHEET, ADJUST SCALES ACCORDINGLY

JOB NO. 8930A.11
DRAWING NO. 01C01
SHEET NO. OF 549

PROJECT NO. 8930A.11 FILE NAME: 8930A1101C01.dgn

Plot Date: 17-SEP-2013 9:59:00 AM
User: DDonk
PlotScale: 2:1
DesignScript: Carollo_Std_Pen_v0905.pen
ColorTable: gshade.ctb
Model: Layout1
LAST SAVED BY: ddonk

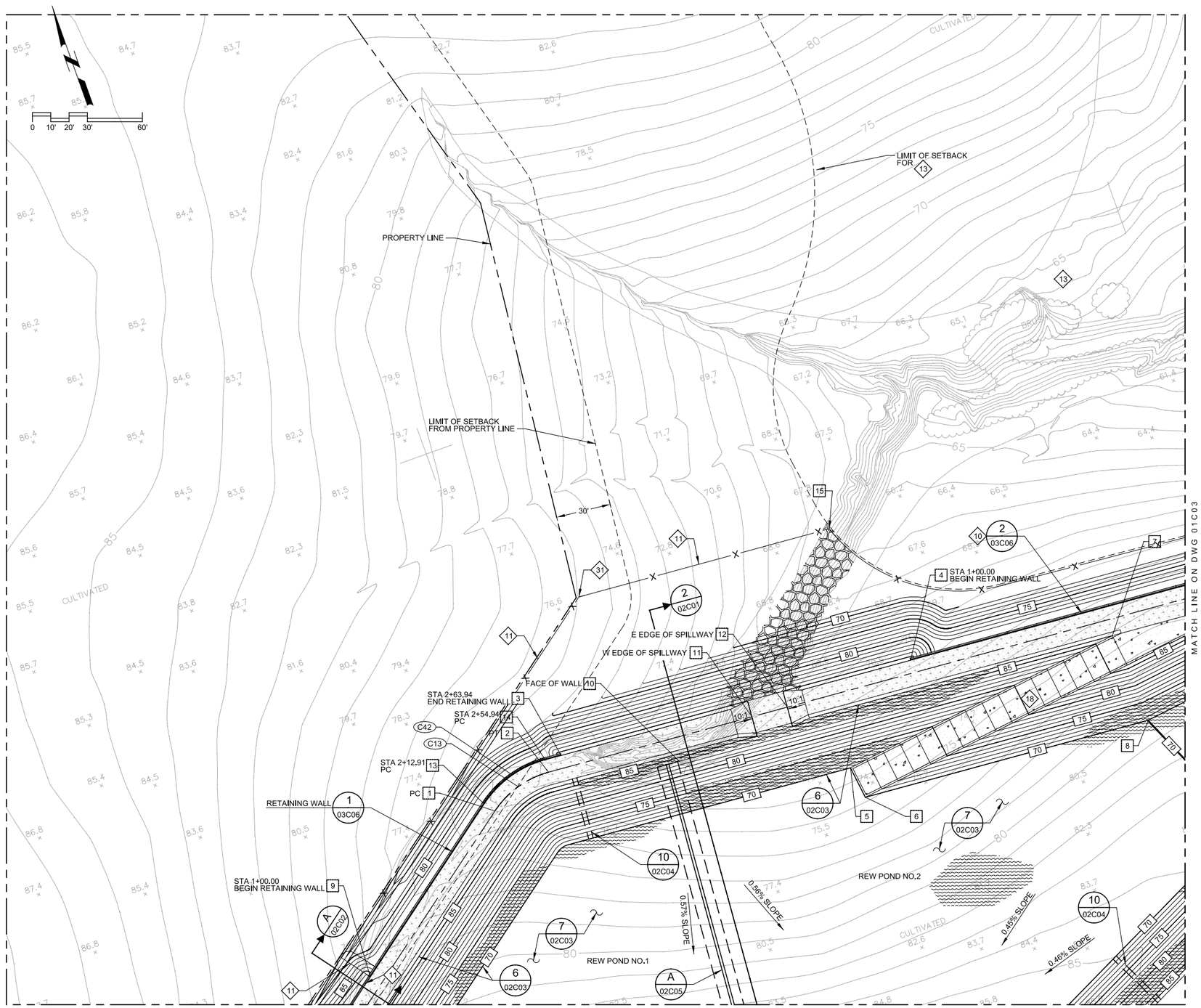

KEY NOTES

1. CONSTRUCT 4" AC OVER 16" ABC OVER RECOMPACTED SUBGRADE PER SPECIFICATIONS.
2. CONSTRUCT 6" ABC OVER 12" COMPACTED SUBGRADE PER SLO COUNTY STANDARD DRAWING A-1j.
3. CONSTRUCT 9" DEEP TYPE A GRAVEL.
4. CONCRETE CURB PER C101/TYP
5. CONCRETE ROLLED CURB PER C105/TYP
6. CONCRETE SIDEWALK PER C120/TYP, 4 FT WIDE
7. WOOD HEADER PER C130/TYP
8. CONCRETE CURB AND GUTTER PER C102/TYP
9. CATCH BASIN PER C002/TYP
10. EARTH RETAINING WALL
11. CHAIN LINK FENCE. PROVIDE FENCE GATES WHERE INDICATED, PROVIDE PRIVACY SCREEN ON FENCE ALONG ENTIRE WESTERN PLANT BOUNDARY.
12. SWALE OR CULVERT, SIZE AS INDICATED.
13. DESIGNATED ENVIRONMENTALLY SENSITIVE HABITAT AREA
14. FIRE HYDRANT PER SLO COUNTY STANDARD DRAWING W-2.
15. PAINT 4" WHITE STRIPE PER SLO COUNTY LUO CHAPTER 22.18 OR CZLUO SECTION 23.04.16x.
16. ADA PARKING STRIPING AND MARKINGS SHALL CONFORM TO THE CALIFORNIA ACCESS COMPLIANCE MANUAL SECTIONS 1109A,8.x.
17. CULVERT WITH FLARED END SECTION PER SLO COUNTY STANDARD DRAWING H-5.
18. CONCRETE RAMP PER SECTION C ON DWG 02C02. PROVIDE 1' LINER LIP EACH SIDE OF RAMP.
19. NON-REMOVALBLE GUARD POST PER C160/TYP OR REMOVALBE GUARD POST PER C161/TYP. PROVIDE NON-REMOVABLE GUARD POST UNLESS NOTED OTHERWISE.
20. LIGHT FIXTURE PER ELECTRICAL DWGS.
21. 8" THICK CONCRETE SLAB WITH #5 @ 12" STEEL REINF EW AT MID DEPTH OF CONCRETE SLAB. PROVIDE CONSTR JOINT PER TYP DET S110 EVERY 30' MAX EACH DIRECTION.
22. BEGIN STANDARD ROAD SECTION PER SECTION 1/02C01.
23. 2' WIDE CROSS GUTTER PER TYP DET C104
24. FOR MANHOLE LOCATIONS SEE YARD PIPING DRAWINGS
25. WALKOUT PROVISION, TWO (2) FOR EACH REW POND, LOCATED AS SHOWN.
26. PRECAST SAFETY CURB PER TYP DET C140
27. CONCRETE SIDEWALK PER C120/TYP, 6 FT WIDE
28. CHAIN LINK GATE, 4 FT WIDE BY 6 FT HIGH
29. 4" SCH. 80 PVC DRAIN
30. BEGIN FENCE SCREEN
31. END FENCE SCREEN
32. INLINE DRAIN PER C003/TYP

GENERAL NOTES

1. THE FOLLOWING GENERAL AND KEY NOTES APPLY TO DWGS 01C02 THRU 01C05.
2. FOR GENERAL STRUCTURAL NOTES AND EARTHWORK DETAILS, SEE DWG 00G10 & 00G11.
3. FOR COORDINATE CONTROL DATA AND CURVE DATA, SEE DWG 01C20 & 01C21.
4. REMOVE EXISTING SOIL TO A DEPTH OF 3 FEET BELOW EXISTING SITE GRADES THROUGHOUT THE ENTIRE PLANT SITE. BOTTOM OF EXCAVATION SHALL BE FREE OF LOOSE OR UNSUITABLE MATERIAL. EXISTING TOP SOIL HAS BEEN DISTURBED BY PAST AGRICULTURAL ACTIVITIES. ONSITE SOILS (PREDOMINANTLY CLAY) MAY BE REUSED, PROVIDED THAT THEY MEET SPECIFICATIONS.
5. MATCH FINISHED GRADE EL WITH EXISTING GRADE AT PROPERTY LINE OR SETBACK LIMIT FROM ESHA.
6. PROVIDE A WHEEL STOP IN EACH PARKING STALL, PER C140/TYP.
7. FURNISH AND APPLY HYDROSEED TO ALL AREAS DISTURBED DURING CONSTRUCTION, BY EXCAVATION, GRADING, TRENCHING, OR OTHER ACTIVITIES. THIS AND OTHER TEMPORARY EROSION CONTROL MEASURES SHALL REMAIN IN PLACE UNTIL PERMANENT MEASURES (E.G., LANDSCAPING) ARE ESTABLISHED. PERMANENT EROSION CONTROL SHALL BE PLACED AND ESTABLISHED WITH 100% COVERAGE ON ALL DISTURBED SURFACES OTHER THAN LINED, PAVED, OR GRAVEL SURFACES, PRIOR TO FINAL INSPECTION. PERMANENT EROSION CONTROL SHALL BE FULLY ESTABLISHED PRIOR TO FINAL ACCEPTANCE. IF HYDROSEEDING IS NOT EFFECTIVE BY SEPT 2015, THEN OTHER IMMEDIATE METHODS SHALL BE IMPLEMENTED AT NO ADDITIONAL COST TO OWNER, SUCH AS EROSION CONTROL BLANKETS, OR A THREE-STEP APPLICATION OF 1) SEED, MULCH, FERTILIZER 2) BLOWN STRAW 3) TACKIFIER AND MULCH.

LEGEND

- AC PAVEMENT (1)
- SMOOTH HDPE LINER
- TYPE-A GRAVEL (3)
- AGGREGATE BASE COURSE (2)
- CONCRETE
- RIP-RAP
- LANDSCAPING

REV	DATE	BY	DESCRIPTION

DESIGNED HGK
DRAWN GAT
CHECKED RLG
DATE SEPT 2013

REGISTERED PROFESSIONAL ENGINEER BRIAN GIL KASTNER No. 62686 CIVIL STATE OF CALIFORNIA 9/16/2013

carollo

SAN LUIS OBISPO COUNTY

SAN LUIS OBISPO COUNTY
LOS OSOS WATER RECYCLING FACILITY PROJECT
CIVIL
PAVING AND GRADING - AREA "A"

VERIFY SCALES
BAR IS ONE INCH ON ORIGINAL DRAWING
0 1"
IF NOT ONE INCH ON THIS SHEET, ADJUST SCALES ACCORDINGLY

JOB NO. 8930A.11
DRAWING NO. 01C02
SHEET NO. OF 549

PROJECT NO. 8930A.11 FILE NAME: 8930A1101C02.dgn

Plot Date: 17-SEP-2013 9:59:19 AM User: DDonk PlotScale: 2:1 DesignScript: Carollo_Std_Pen_v0905.pen ColorTable: gshade.ctb Model: Layout1 LAST SAVED BY: ddonk

Plot Date: 17-SEP-2013 9:59:38 AM
User: DDonk
PlotScale: 2:1
DesignScript: Carollo_Std_Pen_v0905.pen
ColorTable: gshade.ctb
Model: Layout1
LAST SAVED BY: ddonk

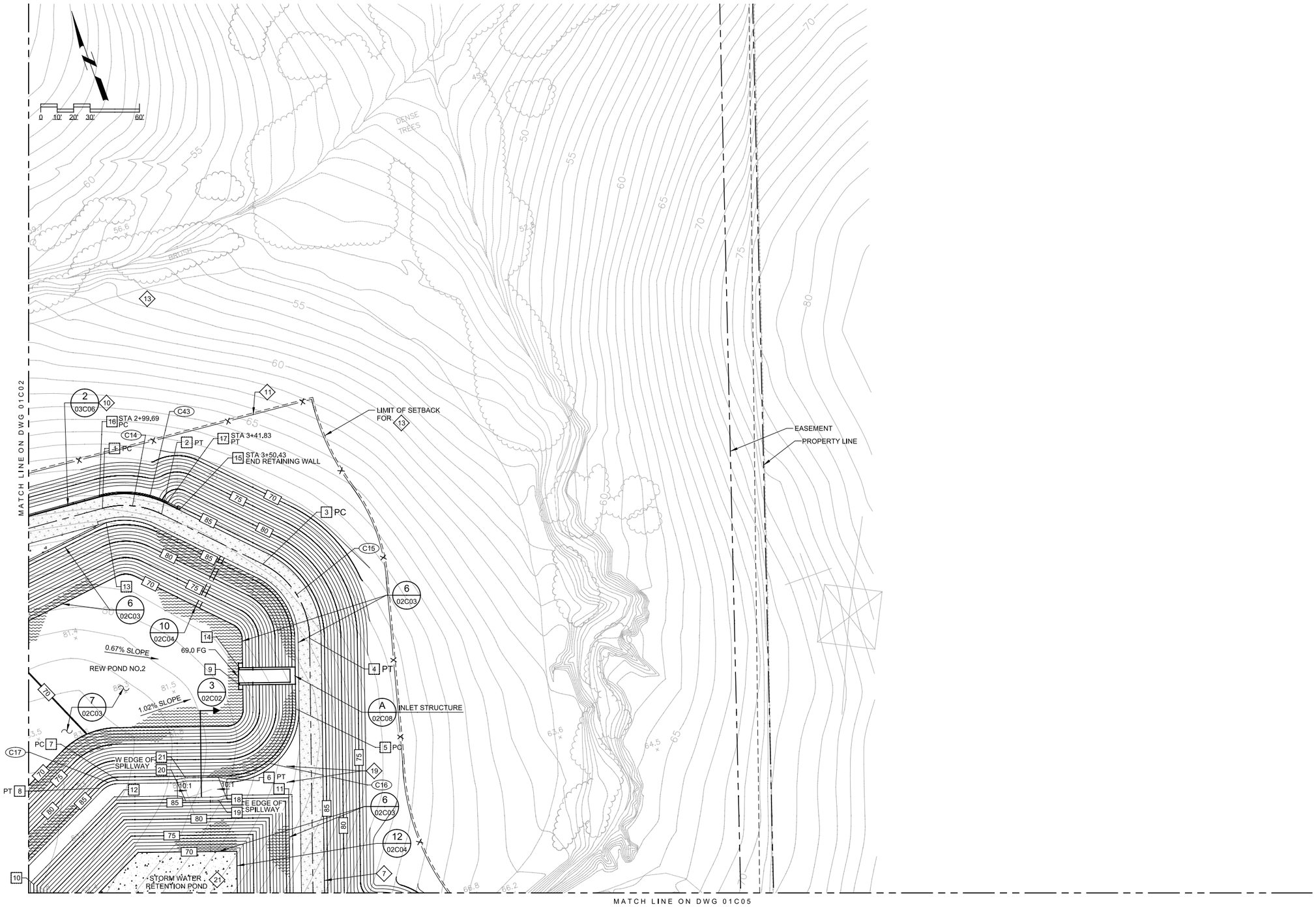

GENERAL NOTES

1. SEE DWG 01C02 FOR GENERAL NOTES.
2. SEE DWG 01C02 FOR KEY NOTES.

.

LEGEND

- AC PAVEMENT (1)
- SMOOTH HDPE LINER
- TYPE-A GRAVEL (3)
- AGGREGATE BASE COURSE (2)
- CONCRETE
- RIP-RAP
- LANDSCAPING

REV	DATE	BY	DESCRIPTION

DESIGNED HGK
DRAWN GAT
CHECKED RLG
DATE SEPT 2013

REGISTERED PROFESSIONAL ENGINEER — No. 62686 — CIVIL — STATE OF CALIFORNIA — 9/16/2013

carollo

SAN LUIS OBISPO COUNTY

SAN LUIS OBISPO COUNTY

LOS OSOS WATER RECYCLING FACILITY PROJECT

CIVIL

PAVING AND GRADING - AREA "B"

VERIFY SCALES
BAR IS ONE INCH ON ORIGINAL DRAWING
0 1"
IF NOT ONE INCH ON THIS SHEET, ADJUST SCALES ACCORDINGLY

JOB NO. 8930A.11
DRAWING NO. 01C03
SHEET NO. OF 549

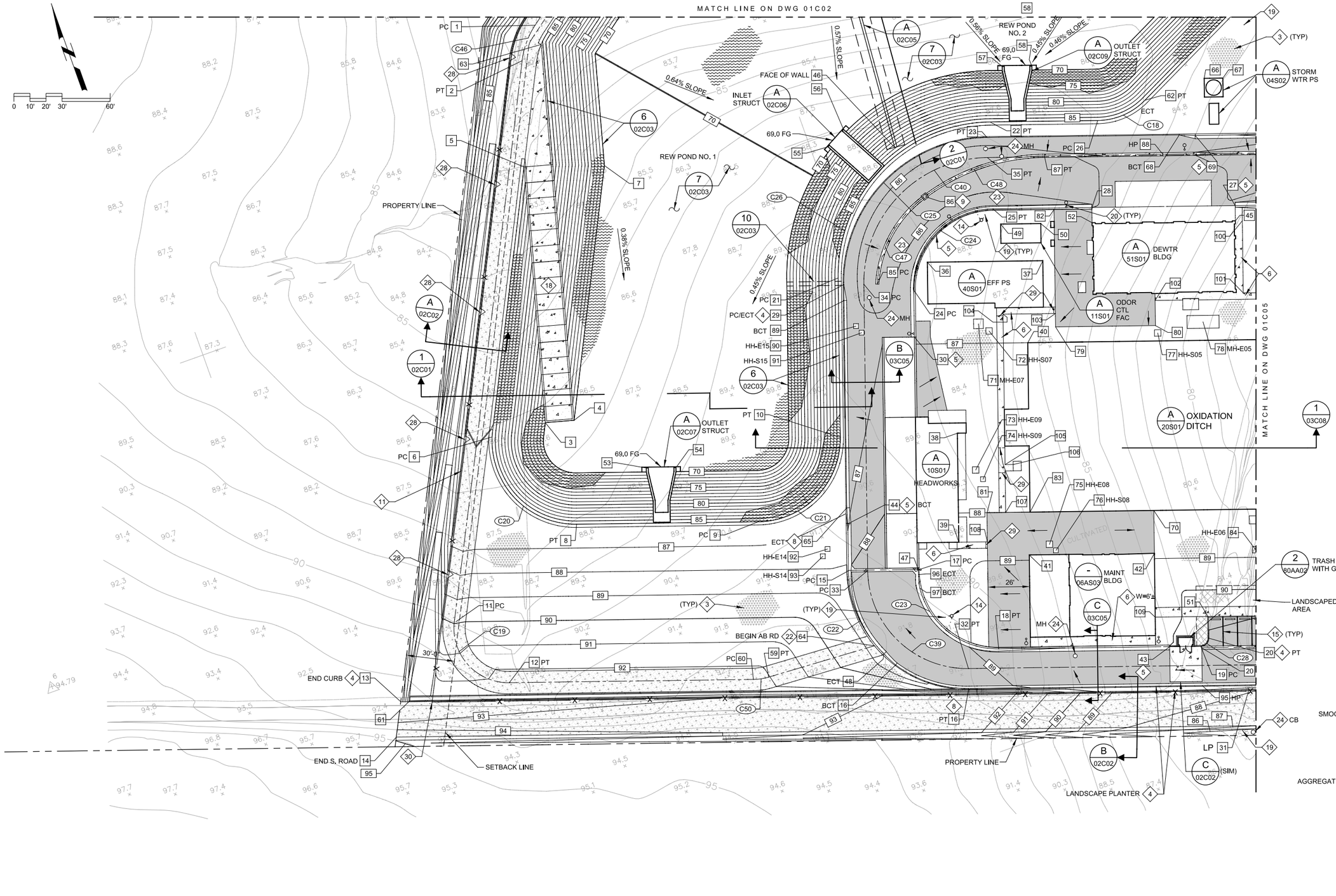

GENERAL NOTES

1. SEE DWG 01C02 FOR GENERAL NOTES.
2. SEE DWG 01C02 FOR KEY NOTES.

LEGEND

ECT = END CURB TRANSITION
BCT = BEGIN CURB TRANSITION

- AC PAVEMENT (1)
- SMOOTH HDPE LINER
- TYPE A GRAVEL (3)
- AGGREGATE BASE COURSE (2)
- CONCRETE
- RIP RAP
- LANDSCAPING

REV	DATE	BY	DESCRIPTION

DESIGNED HGK
DRAWN GAT
CHECKED RLG
DATE SEPT 2013

REGISTERED PROFESSIONAL ENGINEER — BRIAN GIL KATONA — No. 62686 — CIVIL — STATE OF CALIFORNIA — 9/16/2013

carollo

SAN LUIS OBISPO COUNTY

SAN LUIS OBISPO COUNTY

LOS OSOS WATER RECYCLING FACILITY PROJECT

CIVIL

PAVING AND GRADING - AREA "C"

VERIFY SCALES
BAR IS ONE INCH ON ORIGINAL DRAWING
0 1"
IF NOT ONE INCH ON THIS SHEET, ADJUST SCALES ACCORDINGLY

JOB NO. 8930A.11
DRAWING NO. 01C04
SHEET NO. OF 549

Plot Date: 17-SEP-2013 10:47:01 AM
User: bhawes
PlotScale: 2:1
Carollo_Std_Pen_v0905.pen
DesignScript:
ColorTable: gshade.ctb
Model: Layout1
LAST SAVED BY: ddonk

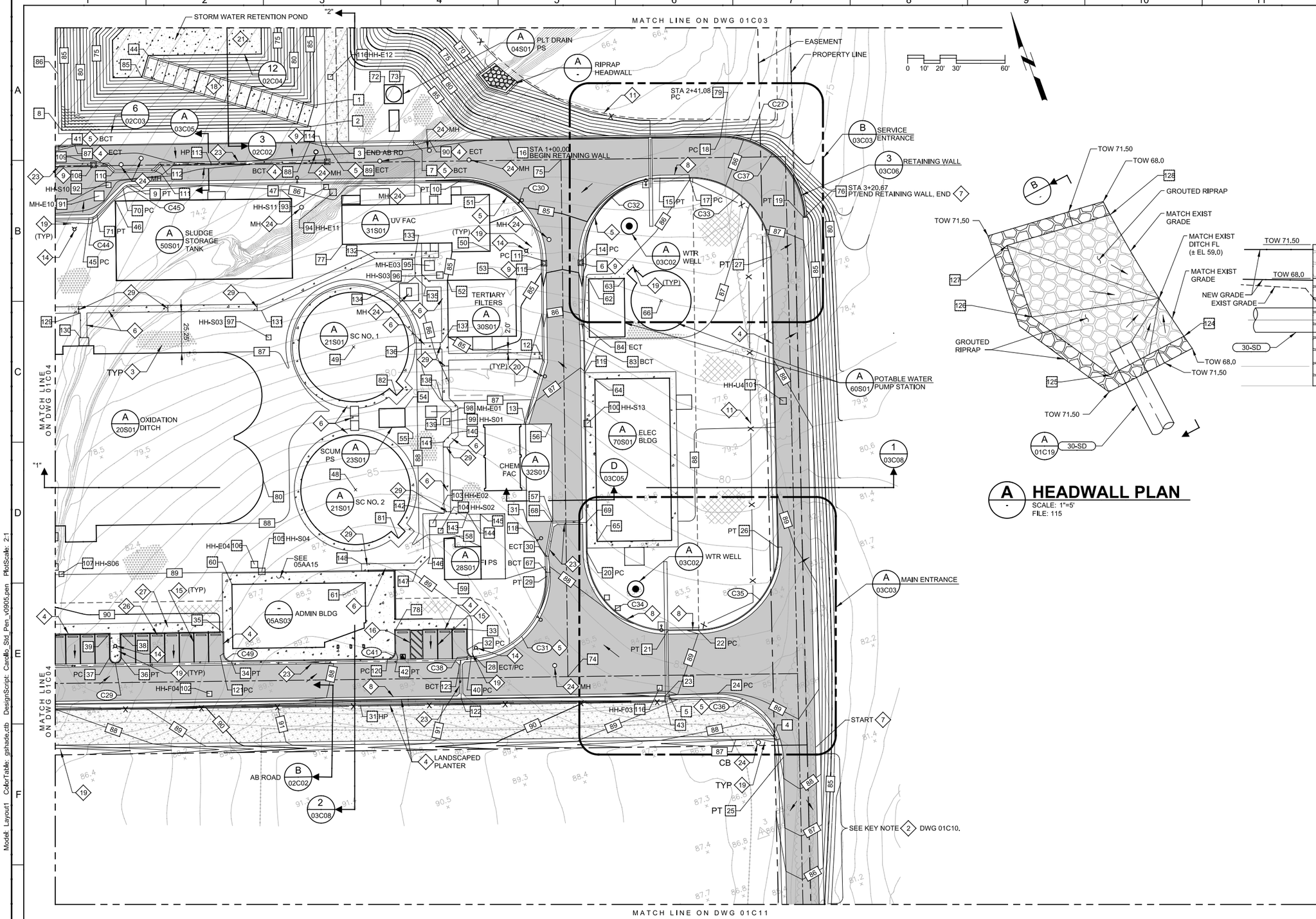

A HEADWALL PLAN

SCALE: 1"=5'
FILE: 115

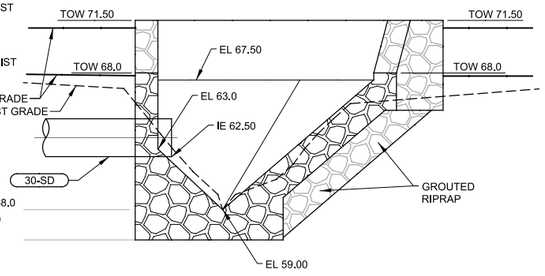

B SECTION

SCALE: 1"=5'
FILE: FILE

GENERAL NOTES

1. SEE DWG 01C02 FOR GENERAL NOTES.
2. SEE DWG 01C02 FOR KEY NOTES.

LEGEND

ECT = END CURB TRANSITION
BCT = BEGIN CURB TRANSITION

AC PAVEMENT
SMOOTH HDPE LINER
TYPE A GRAVEL
AGGREGATE BASE COURSE
CONCRETE
RIP RAP
LANDSCAPING
PAVEMENT DELINEATION CALTRANS DETAIL NUMBER

REV	DATE	BY	DESCRIPTION

DESIGNED HGK
DRAWN GAT
CHECKED RLG
DATE SEPT 2013

REGISTERED PROFESSIONAL ENGINEER
CHAN GIL KANG
No. 62686
CIVIL
STATE OF CALIFORNIA
9/16/2013

carollo

SAN LUIS OBISPO COUNTY

SAN LUIS OBISPO COUNTY
LOS OSOS WATER RECYCLING FACILITY PROJECT
CIVIL
PAVING AND GRADING - AREA "D"

VERIFY SCALES
BAR IS ONE INCH ON ORIGINAL DRAWING
0 1"
IF NOT ONE INCH ON THIS SHEET, ADJUST SCALES ACCORDINGLY

JOB NO. 8930A.11
DRAWING NO. 01C05
SHEET NO. OF 549

Model: Layout1 ColorTable: gshade.ctb DesignScript: Carollo_Std_Pen_v0905.pen PlotScale: 2:1
LAST SAVED BY: ddonk

PROJECT NO. 8930A.11 FILE NAME: 8930A1101C05.dgn

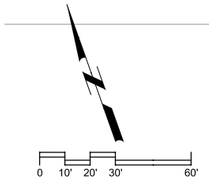

LIMIT OF SETBACK FOR ◇4

LIMIT OF SETBACK FOR ADJACENT PROPERTY

REW POND NO.1

REW POND NO.2

6-PW

◇12

MATCH LINE ON DWG 01C08

MATCH LINE ON DWG 01C07

GENERAL NOTES

1. THE FOLLOWING GENERAL NOTES AND KEY NOTES APPLY TO DWGS 01C06 THRU 01C09.
2. REFER TO CONSTRUCTION SEQUENCE AND CONSTRAINTS FOR WORK IN THIS AREA, SEE DWG 01C01 FOR GENERAL YARD NOTES AND GENERAL YARD DRAWINGS LEGEND.
3. CONCRETE ENCASE ALL PIPING UNDER CONCRETE SLAB, RAMP, SIDEWALK, AND TRUCK LOADING PAD PER P040/TYP, WHETHER SHOWN OR NOT.
4. UNLESS OTHERWISE NOTED, PROVIDE TYP DET P342 FOR DIP CONNECTIONS AT WALL PENETRATIONS.
5. PROVIDE P-TRAP ON LATERALS OF GRAVITY PD, SS, AND OTHER LINES TO PREVENT RELEASE OF SEWER GAS.
6. SLOPE UP SHS PIPING CONTINUOUSLY TO DISCHARGE POINT. AVOID INTERMEDIATE HIGH POINTS ON SHS PIPING. IF UNAVOIDABLE, INSTALL DEGASSING VALVE AT EACH LOCAL HIGH POINT.
7. PROVIDE DOUBLE CONTAINMENTMENT PIPING FOR BURIED CHEMICAL AND FUEL SERVICES PER PIPE SCHEDULE.
8. UNLESS OTHERWISE NOTED, PROVIDE CORROSION MONITORING FACILITIES AT RESTRAINED DIP FLEXIBLE CONECTIONS AT WALL PENETRATIONS PER TYP DET D302.
9. SEE LANDSCAPING DRAWINGS FOR IRRIGATION PIPING AND APPURTENANCES.
10. ======= INDICATES ELECTRIAL DUCTBANKS.
11. FOR SANITARY SEWER & PLANT DRAIN SITE PIPING SCHEMATIC SEE DWG 01C17.
12. FOR MANHOLE PIPE ORIENTATION DETAILS SEE DWG 01C18.

KEY NOTES

◇1 INSTALL PIPE SLOPING DOWNWARD TOWARD DISCHARGE POINT.
◇2 CATCH BASIN PER C002/TYP, 40"x40"x60" (LxWxD).
◇3 DROP INLET CATCH BASIN PER C003/TYP
◇4 DESIGNATED ENVIRONMENTALLY SENSITIVE HABITAT AREA
◇5 FIRE HYDRANT PER SLO COUNTY STANDARD DRAWING W-2.
◇6 HOSE VALVE AND SIGN PER M273/TYP
◇7 CO PER P004/TYP
◇8 INSTALL PIPE SLOPING DOWNWARD TOWARD DISCHARGE POINT.
◇9 MH PER C010/TYP
◇10 BURIED BFV IN VALVE BOX PER P026/TYP
◇11 NATURAL GAS METER AND PRESSURE REGULATING VALVE TO BE INSTALLED BY UTILITY COMPANY
◇12 WATER STATION MONITORS PER DWG 02C03, DETAIL 8.
◇13 24-INCH BF FOR FUTURE CONNECTION
◇14 MINIMUM 10 FEET SEPARATION BETWEEN 14-SS AND 8-FSW
◇15 MINIMUM 10 FEET SEPARATION BETWEEN 16-FM AND 8-FSW
◇16 MINIMUM 10 FEET SEPARATION BETWEEN 6-PW AND 8-FSW
◇17 BURIED BALL VALVE IN VALVE BOX PER P022/TYP

REV	DATE	BY	DESCRIPTION

DESIGNED ADW
DRAWN GAT
CHECKED RLG
DATE SEPT 2013

REGISTERED PROFESSIONAL ENGINEER — ALAN GIL KASTNER — No. 62686 — CIVIL — STATE OF CALIFORNIA — 9/16/2013

carollo

SAN LUIS OBISPO COUNTY

SAN LUIS OBISPO COUNTY

LOS OSOS WATER RECYCLING FACILITY PROJECT

CIVIL

YARD PIPING PLAN - AREA "A"

VERIFY SCALES
BAR IS ONE INCH ON ORIGINAL DRAWING
0 1"
IF NOT ONE INCH ON THIS SHEET, ADJUST SCALES ACCORDINGLY

JOB NO. 8930A.11
DRAWING NO. 01C06
SHEET NO. OF 549

PROJECT NO. 8930A.11 FILE NAME: 8930A1101C06.dgn

Plot Date: 17-SEP-2013 10:01:22 AM
User: DDonk
Model: Layout1 ColorTable: gshade.ctb DesignScript: Carollo_Std_Pen_v0905.pen PlotScale: 2:1
LAST SAVED BY: ddonk

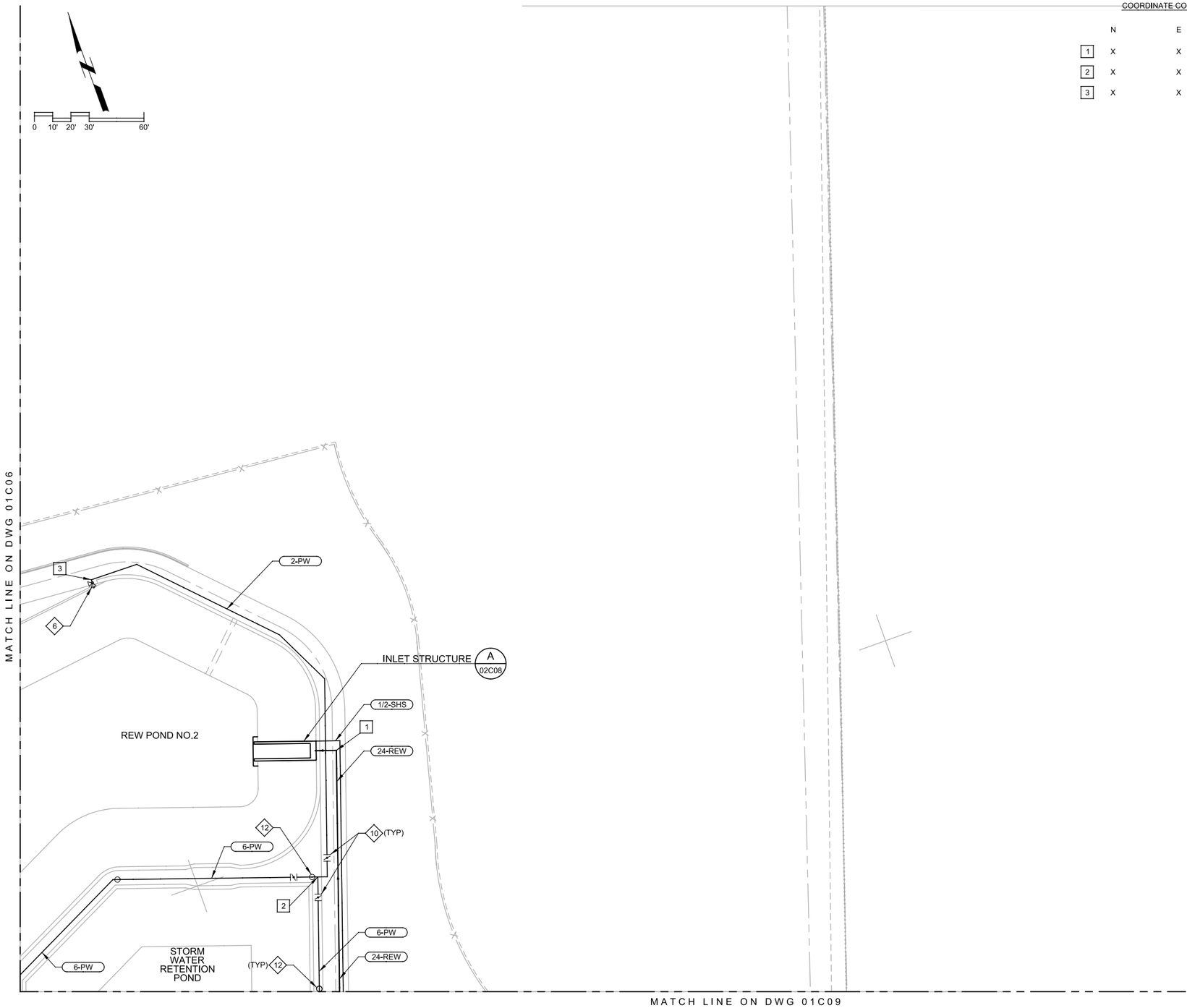

COORDINATE CONTROL DATA

	N	E	ELEV
1	X	X	70.50 INV.
2	X	X	XXXX
3	X	X	XXXX

GENERAL NOTES

1. SEE DWG 01C06 FOR GENERAL NOTES.
2. SEE DWG 01C06 FOR KEY NOTES.

.

REV	DATE	BY	DESCRIPTION

DESIGNED ADW
DRAWN GAT
CHECKED RLG
DATE SEPT 2013

REGISTERED PROFESSIONAL ENGINEER
JOHAN GIL KANG
No. 62686
CIVIL
STATE OF CALIFORNIA
9/16/2013

carollo

SAN LUIS OBISPO COUNTY

SAN LUIS OBISPO COUNTY

LOS OSOS WATER RECYCLING FACILITY PROJECT

CIVIL

YARD PIPING PLAN - AREA "B"

VERIFY SCALES
BAR IS ONE INCH ON ORIGINAL DRAWING
0 1"
IF NOT ONE INCH ON THIS SHEET, ADJUST SCALES ACCORDINGLY

JOB NO. 8930A.11
DRAWING NO. 01C07
SHEET NO. OF 549

PROJECT NO. 8930A.11 FILE NAME: 8930A1101C07.dgn

Plot Date: 17-SEP-2013 10:01:35 AM User: DDonk Model: Layout1 ColorTable: gshade.ctb DesignScript: Carollo_Std_Pen_v0905.pen PlotScale: 2:1 LAST SAVED BY: ddonk

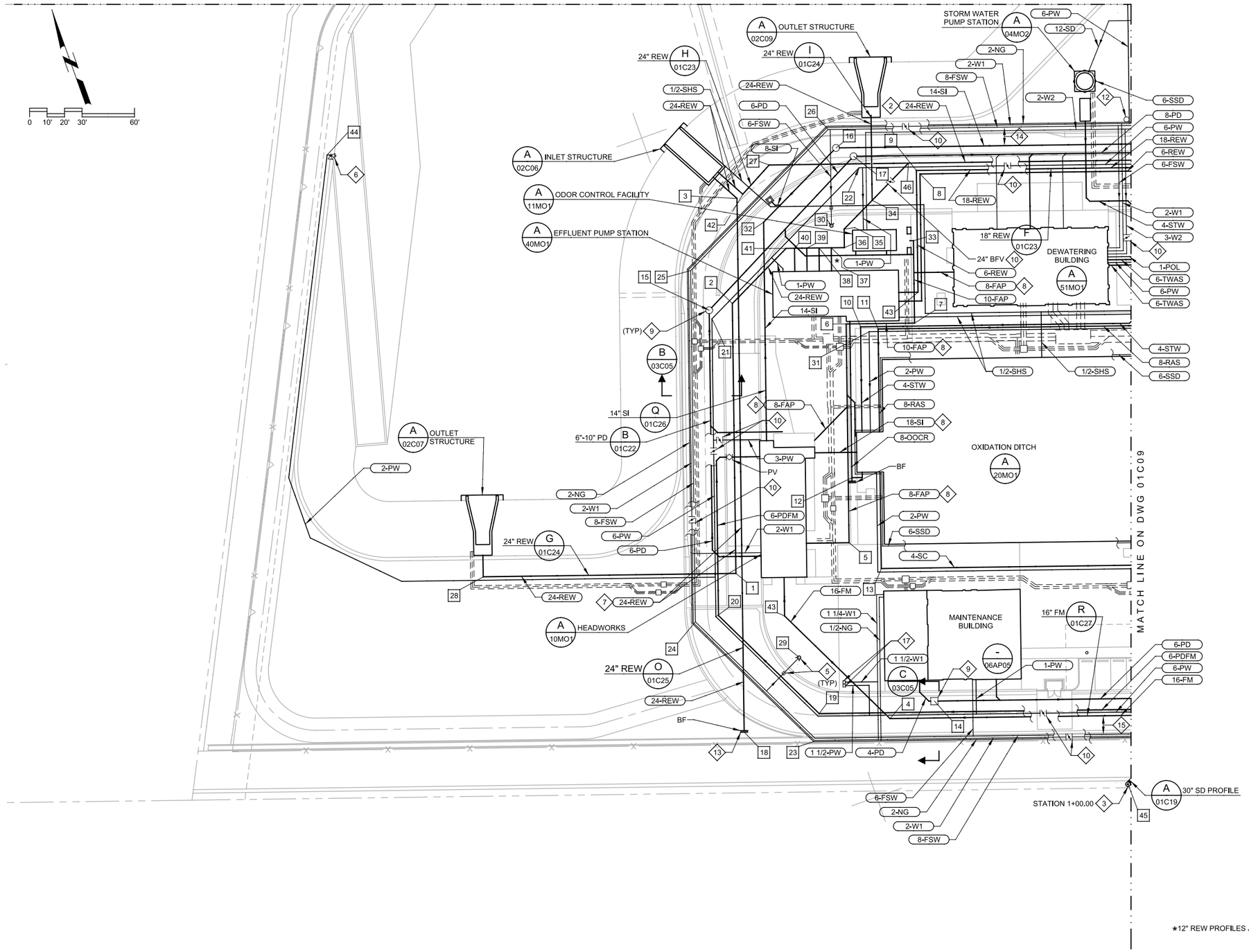

GENERAL NOTES

1. SEE DWG 01C06 FOR GENERAL NOTES.
2. SEE DWG 01C06 FOR KEY NOTES.

COORDINATE CONTROL DATA

POINT	NORTH	EAST	ELEV	STATION
1	N:2310147.44	E:5725967.14	PROFILE G	2+56.69
2	N:2310293.46	E:5726017.01	PROFILE G	4+10.99
3	N:2310349.21	E:5726039.69	PROFILE O	1+18.23
4	N:2310039.67	E:5726022.24	PROFILE R	1+22.05
5	N:2310142.26	E:5726033.95	82.16	
6	N:2310260.63	E:5726074.38	79.41	
7	N:2310247.99	E:5726111.38	79.31	
8	N:2310327.26	E:5726142.92	77.50	
9	N:2310329.81	E:5726141.65	PROFILE F	1+80.58
10	N:2310256.31	E:5726081.60	70.82	
11	N:2310251.74	E:5726090.60	71.50	
12	N:2310176.75	E:5726047.96	77.50	
13	N:2310122.16	E:5726046.35	80.50	
14	N:2310040.59	E:5726049.46	84.00	
15	N:2310294.29	E:5726003.27	PROFILE B	2+46.47 (MH-1)
16	N:2310357.39	E:5726102.68	PROFILE Q	2+84.16 (MH-2)
17	N:2310349.51	E:5726110.53	PROFILE B	3+67.11 (MH-3)
18	N:2310061.18	E:5725941.38	PROFILE O	4+23.40
19	N:2310055.98	E:5725985.05	81.00	
20	N:2310127.98	E:5725948.05	81.00	
21	N:2310289.15	E:5726003.10	77.46	
22	N:2310342.28	E:5726111.34	75.25	
23	N:2310041.94	E:5725976.71	84.83	
24	N:2310129.17	E:5725936.01	84.83	
25	N:2310319.23	E:5726000.93	82.59	
26	N:2310368.82	E:5726101.96	82.64	
27	N:2310361.01	E:5726063.44	PROFILE H	1+41.61
28	N:2310194.12	E:5725830.46	PROFILE G	1+12.25
29	N:2310090.04	E:5725985.02	FH	
30	N:2310316.38	E:5726085.34	FH	
31	N:2310252.07	E:5726085.24	79.50	
32	N:2310331.27	E:5726049.48	PROFILE Q	2+24.90
33	N:2310258.52	E:5726119.44	PROFILE F	1+10.99
34	N:2310322.21	E:5726112.11	PROFILE G	5+21.87
35	N:2310312.08	E:5726091.47	PROFILE G	4+98.88
36	N:2310302.10	E:5726088.06	PROFILE G	4+88.33
37	N:2310304.52	E:5726080.98	PROFILE G	4+80.84
38	N:2310306.78	E:5726074.35	PROFILE G	4+73.84
39	N:2310309.04	E:5726067.73	PROFILE G	4+66.84
40	N:2310311.30	E:5726061.10	PROFILE G	4+59.84
41	N:2310312.86	E:5726056.55	PROFILE G	4+55.03
42	N:2310349.21	E:5726039.69	PROFILE O	1+18.23
43	N:2310115.18	E:5725985.18	PROFILE R	1+22.05
44	N:2310451.32	E:5725827.43	82.80	
45	N:2309958.66	E:5726137.74	PROFILE A	1+00
46	N:2310335.29	E:5726138.76	PROFILE G	

*12" REW PROFILES J, K, L, M ON 01C25

REV	DATE	BY	DESCRIPTION

DESIGNED ADW
DRAWN GAT
CHECKED RLG
DATE SEPT 2013

REGISTERED PROFESSIONAL ENGINEER — ADRIAN GIL KATZENMEYER — No. 62686 — CIVIL — STATE OF CALIFORNIA — 9/16/2013

carollo

SAN LUIS OBISPO COUNTY

SAN LUIS OBISPO COUNTY

LOS OSOS WATER RECYCLING FACILITY PROJECT

CIVIL

YARD PIPING PLAN - AREA "C"

VERIFY SCALES
BAR IS ONE INCH ON ORIGINAL DRAWING
0 1"
IF NOT ONE INCH ON THIS SHEET, ADJUST SCALES ACCORDINGLY

JOB NO. 8930A.11
DRAWING NO. 01C08
SHEET NO. OF 549

PROJECT NO. 8930A.11 FILE NAME: 8930A1101C08.dgn

Plot Date: 17-SEP-2013 10:47:36 AM
User: DDonk
PlotScale: 2:1
DesignScript: Carollo_Std_Pen_v0905.pen
ColorTable: gshade.ctb
Model: Layout1
LAST SAVED BY: bhawes

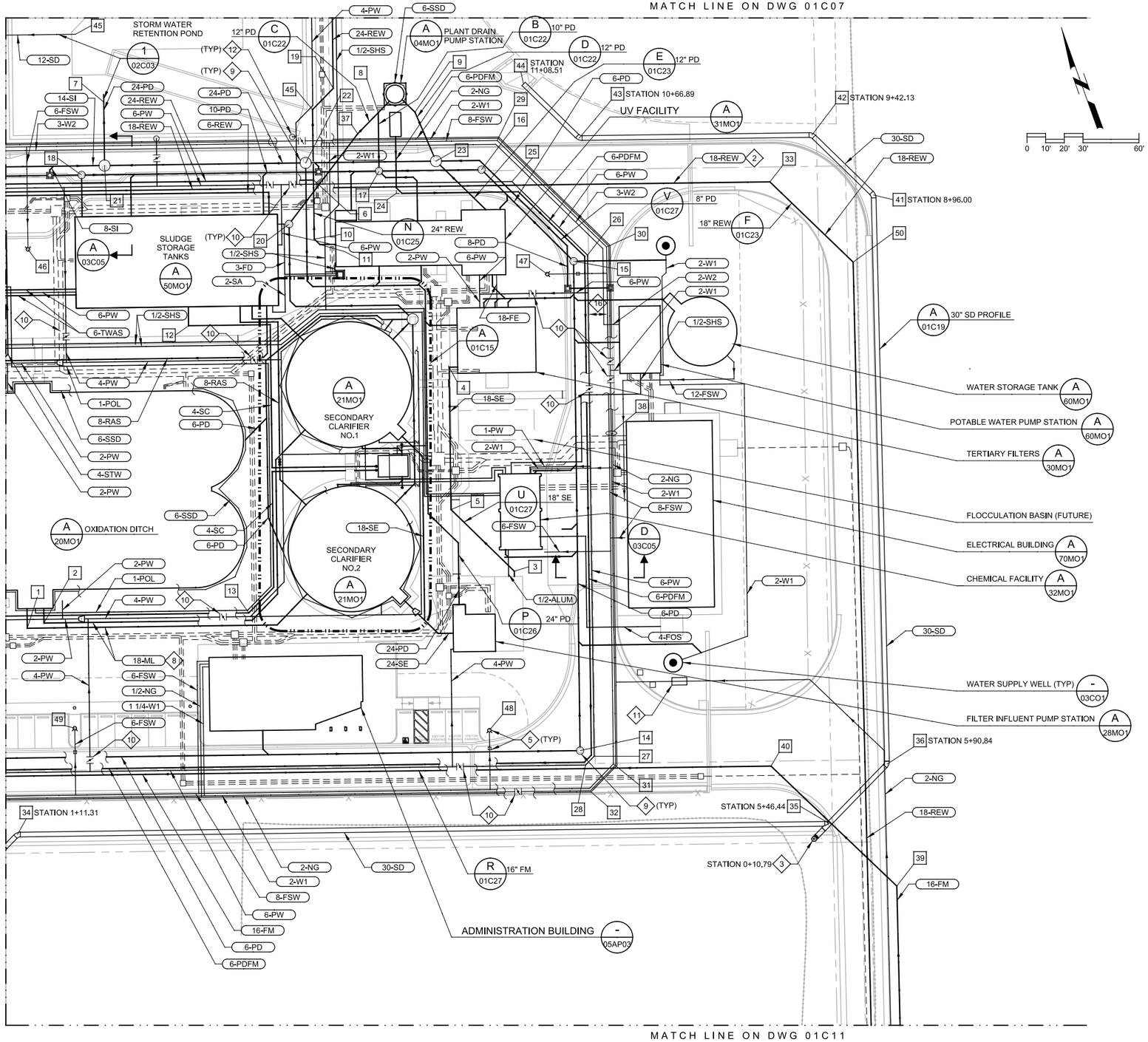

GENERAL NOTES

1. SEE DWG 01C06 FOR GENERAL NOTES.
2. SEE DWG 01C06 FOR KEY NOTES.

COORDINATE CONTROL DATA

POINT	NORTH	EAST	ELEV	STATION
1	N:2310066.05	E:5726190.01	77.00	
2	N:2310065.67	E:5726199.38	77.00	
3	N:2310007.21	E:5726446.14	PROFILE U	2+28.85
4	N:2310121.95	E:5726449.95	PROFILE U	1+04.57
5	N:2310049.71	E:5726425.28	PROFILE U	1+80.91
6	N:2310240.88	E:5726415.16	PROFILE G	8+43.64
7	N:2310318.00	E:5726323.33	PROFILE P	5+45.88
8	N:2310263.23	E:5726459.99	PROFILE B	7+57.00
9	N:2310256.86	E:5726478.63	PROFILE D	1+09.91
10	N:2310210.96	E:5726404.94	PROFILE N	1+12.67
11	N:2310207.15	E:5726406.81	PROFILE N	1+08.43
12	N:2310189.78	E:5726325.88	80.15	
13	N:2310033.96	E:5726304.61	80.50	
14	N:2309904.80	E:5726447.06	81.83	
15	N:2310153.10	E:5726531.87	77.22	
16	N:2310215.85	E:5726501.87	76.83	
17	N:2310233.61	E:5726449.87	PROFILE B	7+25.70 (MH-8)
18	N:2310285.14	E:5726299.00	PROFILE B	5+66.27 (MH-12)
19	N:2310283.62	E:5726441.64	PROFILE G	8+97.29
20	N:2310223.05	E:5726394.94	PROFILE C	3+14.34
21	N:2310285.78	E:5726312.32	PROFILE P	5+11.84 (MH-11)
22	N:2310250.95	E:5726414.30	PROFILE P	4+04.07 (MH-10)
23	N:2310228.37	E:5726480.43	PROFILE D	1+38.48 (MH-7)
24	N:2310219.22	E:5726454.62	76.00	
25	N:2310204.38	E:5726515.07	76.00	
26	N:2310153.64	E:5726539.98	77.46	
27	N:2309899.43	E:5726453.15	81.00	
28	N:2309896.54	E:5726447.26	81.00	
29	N:2310227.73	E:5726515.04	81.33	
30	N:2310154.33	E:5726551.07	81.33	
31	N:2309892.08	E:5726461.50	84.90	
32	N:2309881.94	E:5726445.17	84.90	
33	N:2310157.81	E:5726645.24	PROFILE F	7+12.73
34	N:2309963.65	E:5726147.89	PROFILE A	1+11.31
35	N:2309823.17	E:5726559.72	PROFILE A	5+46.44
36	N:2309842.72	E:5726599.59	PROFILE A	5+90.84
37	N:2310256.28	E:5726445.83	PROFILE C	3+75.12
38	N:2310057.90	E:5726519.95	79.20	
39	N:2309779.41	E:5726582.56	PROFILE R	8+47.13
40	N:2309862.62	E:5726540.65	PROFILE R	7+53.97
41	N:2310132.50	E:5726695.24	PROFILE A	8+96.00
42	N:2310173.91	E:5726674.93	PROFILE A	9+42.13
43	N:2310214.24	E:5726556.87	PROFILE A	10+66.89
44	N:2310251.60	E:5726538.53	PROFILE A	11+08.51(HW)
45	N:2310276.61	E:5726427.37	PROFILE G	8+81.39
46	N:2310257.22	E:5726258.55	FH	
47	N:2310151.29	E:5726516.22	FH	
48	N:2309931.43	E:5726404.95	FH	
49	N:2310007.03	E:5726196.00	FH	
50	N:2310102.32	E:5726672.83	PROFILE F	8+47.13
51	N:2310357.33	E:5726321.25	78.00	

REV	DATE	BY	DESCRIPTION

DESIGNED ADW
DRAWN GAT
CHECKED RLG
DATE SEPT 2013

REGISTERED PROFESSIONAL ENGINEER — BRIAN GIL KANOWITZ — No. 62686 — CIVIL — STATE OF CALIFORNIA — 9/16/2013

carollo

SAN LUIS OBISPO COUNTY

SAN LUIS OBISPO COUNTY
LOS OSOS WATER RECYCLING FACILITY PROJECT
CIVIL
YARD PIPING PLAN - AREA "D"

VERIFY SCALES
BAR IS ONE INCH ON ORIGINAL DRAWING
0 1"
IF NOT ONE INCH ON THIS SHEET, ADJUST SCALES ACCORDINGLY

JOB NO. 8930A.11
DRAWING NO. 01C09
SHEET NO. OF 549

PROJECT NO. 8930A.11 FILE NAME: 8930A1101C09.dgn

Plot Date: 17-SEP-2013 10:47:49 AM User: DDonk PlotScale: 2:1 DesignScript: Carollo_Std_Pen_v0905.pen ColorTable: gshade.ctb Model: Layout1 LAST SAVED BY: bhawes

Plot Date: 17-SEP-2013 10:02:16 AM
User: DDonk
PlotScale: 2:1
DesignScript: Carollo_Std_Pen_v0905.pen
ColorTable: gshade.ctb
Model: Layout1
LAST SAVED BY: ngriffith

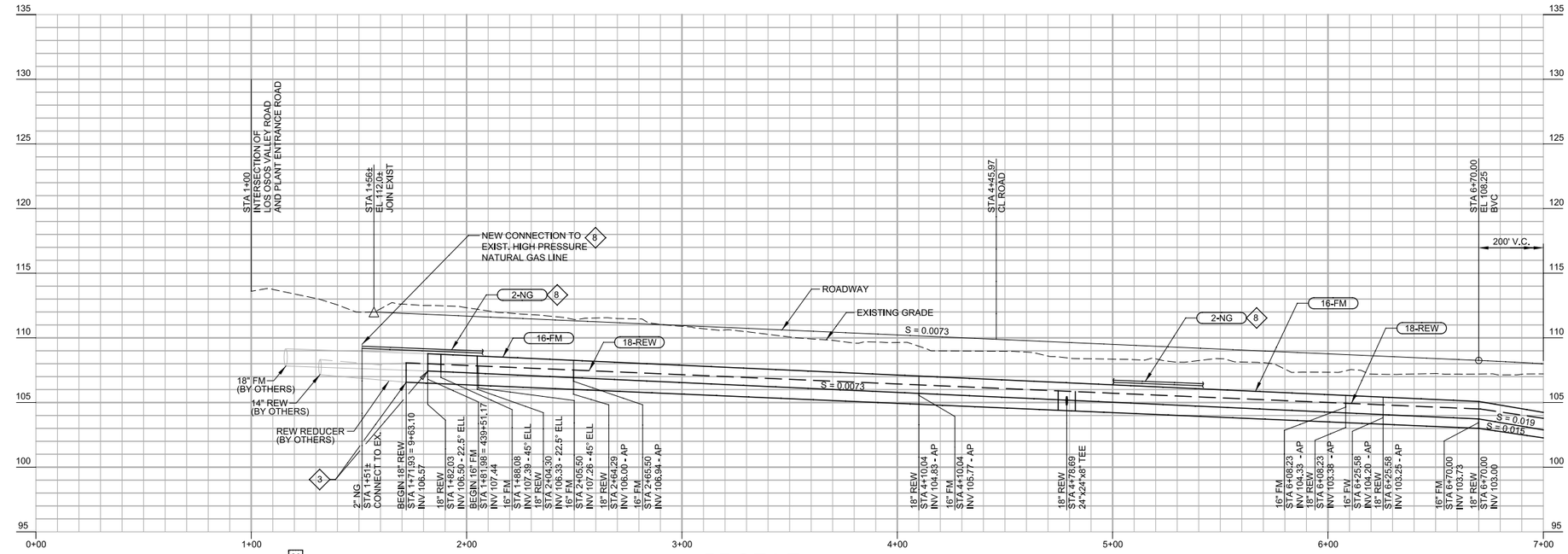

PROFILE

HORIZ SCALE: 1"=30'
VERT SCALE: 1"=5'
FILE: 8930A11-01-C-0110

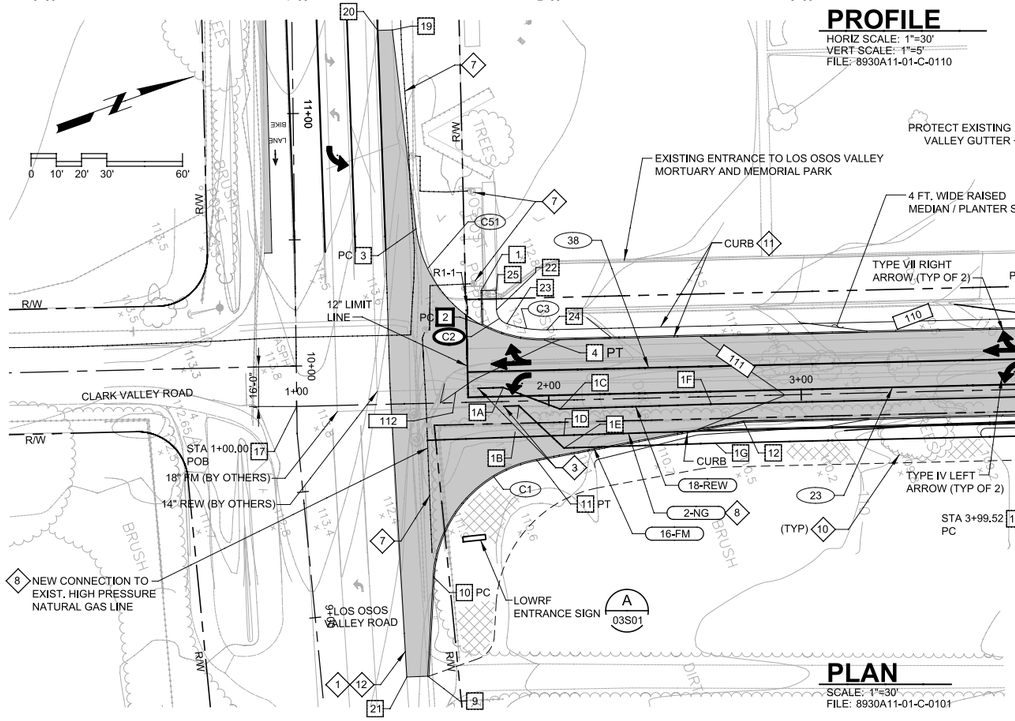

PLAN

SCALE: 1"=30'
FILE: 8930A11-01-C-0101

Yard Piping Coordinate Points				
Point	Station	Offset	Description	Service
1A	1+82.03	5.56 LT	22.50 ° BEND	REW
1B	1+88.08	1.81 RT	45 ° BEND	FM
1C	2+04.30	3.47 RT	22.50 ° BEND	REW
1D	2+05.57	13.95 RT	PI	NG
1E	2+05.50	18.97 RT	45 ° BEND	FM
1F	2+64.29	3.00 RT	22.50 ° BEND	REW
1G	2+65.50	18.50 RT	PI	FM

GENERAL NOTES

1. THE FOLLOWING GENERAL NOTES AND KEY NOTES APPLY TO DWGS 01C10 THRU 01C12.
2. FOR COORDINATE CONTROL DATA AND CURVE DATA, SEE DWG 01C20 AND 01C021. STATIONING SHOWN IS FOR CENTER LINE OF ENTRANCE ROAD. SEE YARD PIPING COORDINATE POINTS TABLE OF HORIZONTAL OFFSETS FOR PIPING, MEASURED FROM CENTER LINE OF THE ROAD.
3. REFER TO CONSTRUCTION SEQUENCE AND CONSTRAINTS FOR WORK IN THIS AREA, SEE DWG 01C01 FOR GENERAL YARD NOTES AND GENERAL YARD DRAWINGS LEGEND.
4. PROVIDE "NO PARKING - FIRE LANE" SIGNS AT 150 FEET O.C. ON BOTH SIDES OF PLANT ENTRANCE ROAD. LOCATE SIGNS AS DIRECTED BY OWNER.
5. PROVIDE A MINIMUM OF 10 FEET HORIZONTAL DISTANCE BETWEEN 18-REW AND 16-FM WITHIN PLANT ENTRANCE ROAD.
6. PROVIDE A 3-FOOT MINIMUM CLEARANCE FOR ELECTRICAL DUCTBANKS FOR ALL PIPELINES WITHIN THE PLANT ENTRANCE ROAD.
7. NOT ALL BURIED PIPING AND UTILITIES ARE SHOWN ON DWG 01C12. SEE DWG 01C09 FOR ADDITIONAL INFORMATION ON THIS AREA.
8. 3 FOOT MINIMUM PAVING WIDTH REQUIRED FOR NEW PAVEMENT. SAW CUT EXISTING AS REQUIRED TO ACHIEVE MINIMUM WIDTH.
9. WHERE NEW PAVEMENT IS SHOWN OVER EXISTING, REMOVE EXISTING PAVEMENT AND REPLACE WITH NEW PER KEY NOTE 6.
10. SEE SPECIFICATION SECTION 01571 FOR TRAFFIC CONTROL REQUIREMENTS.

KEY NOTES

1. MATCH EXISTING GRADE.
2. 10'-0" PAVEMENT AND 3'-0" UNPAVED SHOULDER ON EACH SIDE PER SLO COUNTY STANDARD DRAWING A-1b.
3. POINT OF CONNECTION TO PIPING INSTALLED BY OTHERS. FIELD VERIFY ACTUAL LOCATION. REMOVE EXISTING CAP OR PLUG.
4. EDGE OF PLANT ENTRANCE ROAD SHALL BE AT LEAST 20 FEET FROM THE BASE OF THE ELECTRICAL TOWERS. EDGE OF EXCAVATION FOR PIPE TRENCH SHALL BE A MINIMUM OF 10 FEET FROM THE BASE OF THE ELECTRICAL TOWER.
5. POINT OF FUTURE CONNECTION. COORDINATE LOCATION WITH OWNER.
6. CONSTRUCT 6" AC OVER 16" ABC OVER RECOMPACTED SUBGRADE PER SPEC. SEE SECTION 01140 FOR SEQUENCING REQUIREMENTS.
7. CAUTION: EXISTING HIGH PRESSURE GAS LINE.
8. SEE SECTION 01010 FOR WORK BY OTHERS RELATED TO GAS PIPING INSTALLATION.
9. PROTECT EXIST DRAINAGE CHANNEL AND ADJACENT VEGETATION TO MAXIMUM EXTENT FEASIBLE.
10. REMOVE EXIST TREES AS REQUIRED FOR NEW CONSTRUCTION.
11. CONCRETE CURB PER C101/TYP
12. SAW CUT EXISTING PAVEMENT MINIMUM 1 FOOT FROM EDGE FOR BUTTING WITH NEW PAVEMENT. REMOVE SAW CUT MATERIAL AS REQUIRED FOR NEW CONSTRUCTION.
13. CULVERT WITH FLARED END SECTION PER SLO COUNTY STANDARD DRAWING H-5.
14. MH PER C010/TYP

LEGEND

AC PAVEMENT 6
LANDSCAPING
PAVEMENT DELINEATION CALTRANS DETAIL NUMBER XX

REV	DATE	BY	DESCRIPTION

DESIGNED LJE
DRAWN GAT
CHECKED RLG
DATE SEPT 2013

REGISTERED PROFESSIONAL ENGINEER ANDREW D. WINTNER No. 75948 CIVIL STATE OF CALIFORNIA 9/16/2013

carollo

SAN LUIS OBISPO COUNTY

SAN LUIS OBISPO COUNTY
LOS OSOS WATER RECYCLING FACILITY PROJECT
CIVIL
PLANT ENTRANCE ROAD - PLAN & PROFILE
STA. 1+00.00 TO STA. 7+00.00

VERIFY SCALES
BAR IS ONE INCH ON ORIGINAL DRAWING
0 1"
IF NOT ONE INCH ON THIS SHEET, ADJUST SCALES ACCORDINGLY

JOB NO. 8930A.11
DRAWING NO. 01C10
SHEET NO. OF 549

PROJECT NO. 8930A.11 FILE NAME: 8930A1101C10.dgn

Plot Date: 17-SEP-2013 10:02:33 AM
User: DDonk
PlotScale: 2:1
DesignScript: Carollo_Std_Pen_v0905.pen
ColorTable: gshade.ctb
Model: Layout1
LAST SAVED BY: ddonk

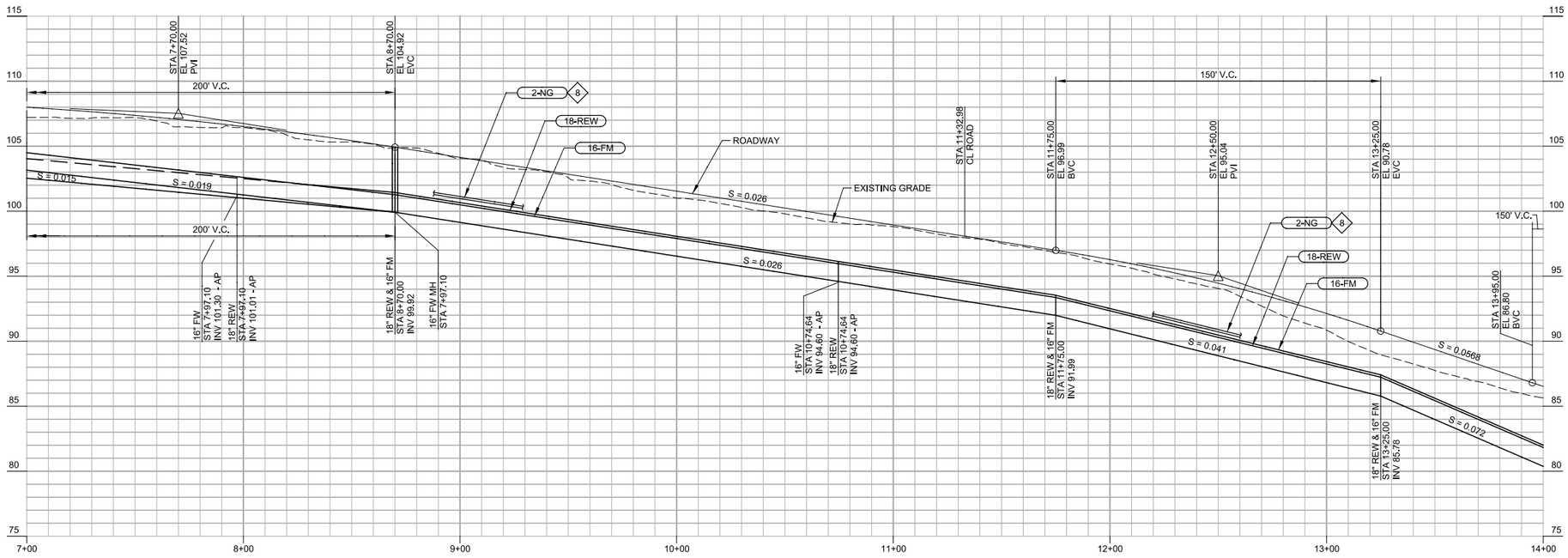

PROFILE

HORIZ SCALE: 1"=30'
VERT SCALE: 1"=5'
FILE: 8930A11-01-C-0110

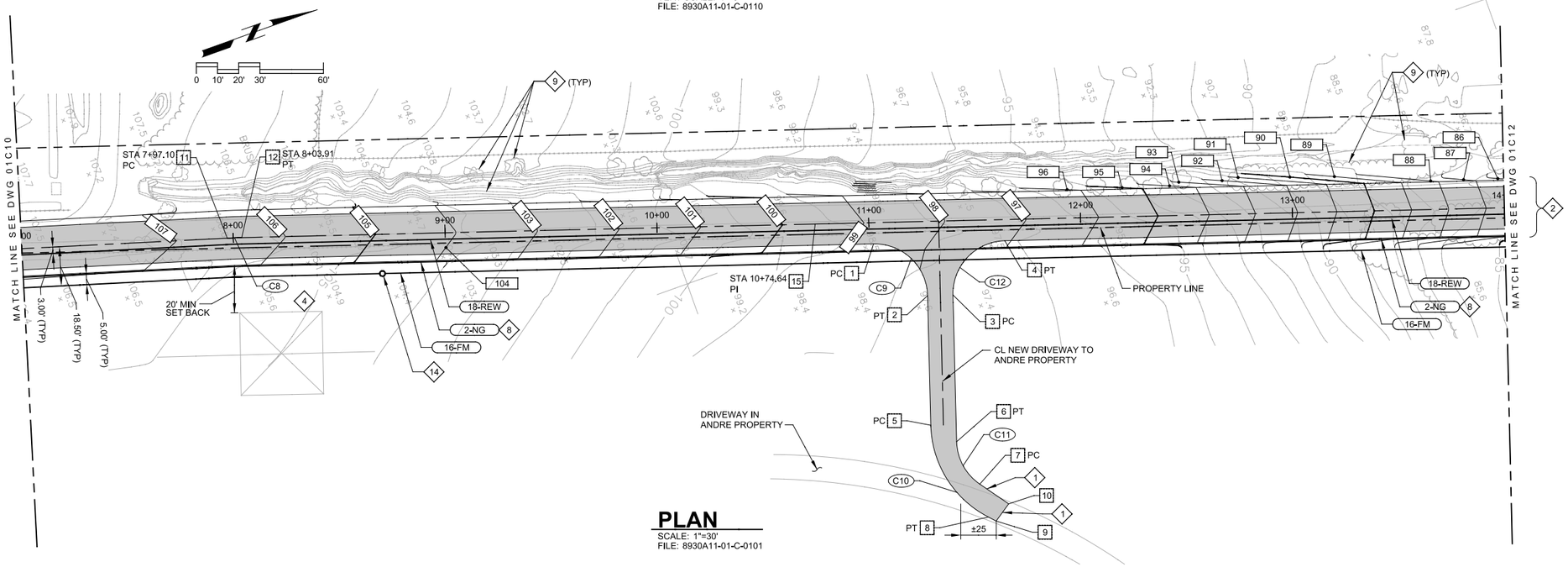

PLAN

SCALE: 1"=30'
FILE: 8930A11-01-C-0101

LEGEND

AC PAVEMENT 6
RIP RAP
LANDSCAPING

GENERAL NOTES

1. SEE DWG 01C10 FOR GENERAL NOTES.
2. SEE DWG 01C10 FOR KEY NOTES.

REV	DATE	BY	DESCRIPTION

DESIGNED LJE
DRAWN GAT
CHECKED RLG
DATE SEPT 2013

REGISTERED PROFESSIONAL ENGINEER ANDREW D. WITTNER No. 5948 CIVIL STATE OF CALIFORNIA 9/16/2013

carollo

SAN LUIS OBISPO COUNTY

SAN LUIS OBISPO COUNTY
LOS OSOS WATER RECYCLING FACILITY PROJECT
CIVIL
PLANT ENTRANCE ROAD - PLAN & PROFILE
STA. 7+00.00 TO STA. 14+00.00

VERIFY SCALES
BAR IS ONE INCH ON ORIGINAL DRAWING
0 1"
IF NOT ONE INCH ON THIS SHEET, ADJUST SCALES ACCORDINGLY

JOB NO. 8930A.11
DRAWING NO. 01C11
SHEET NO. OF 549

PROJECT NO. 8930A.11 FILE NAME: 8930A1101C11.dgn

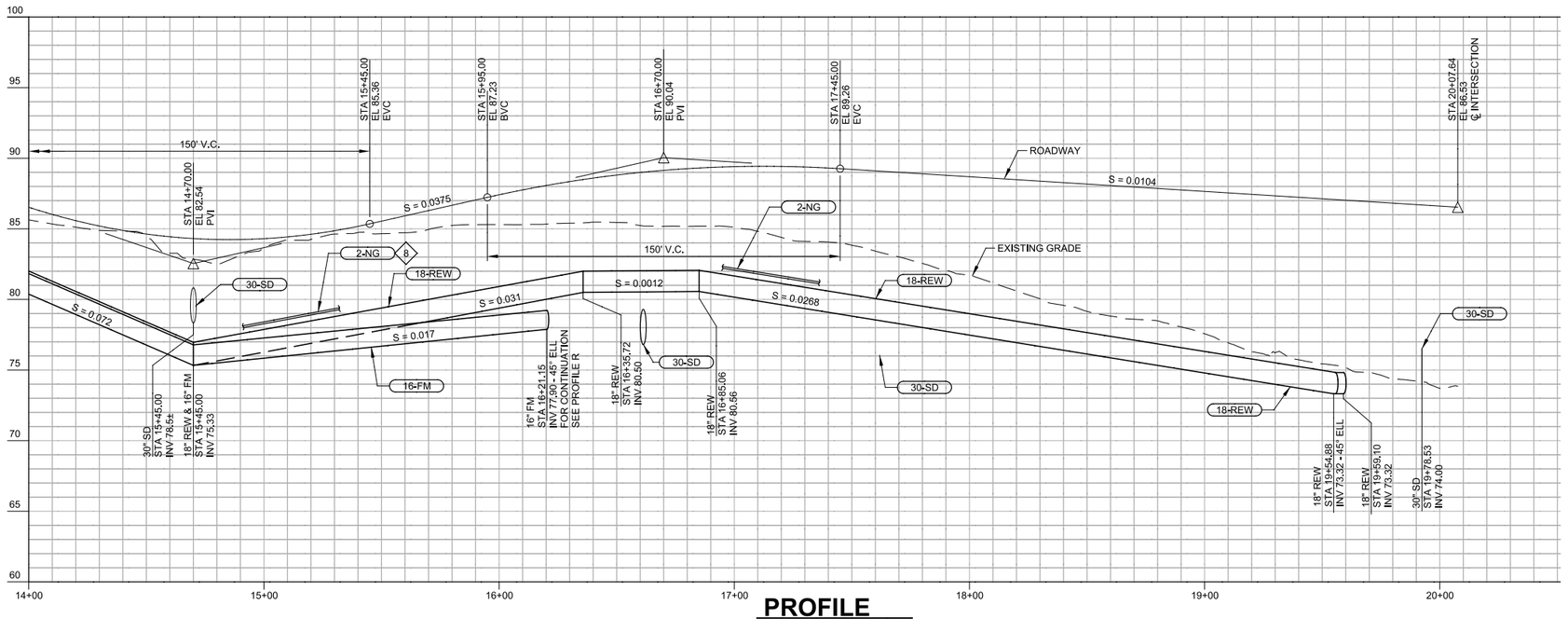

PROFILE

HORIZ SCALE: 1"=30'
VERT SCALE: 1"=5'
FILE: 8930A11-01-C-0110

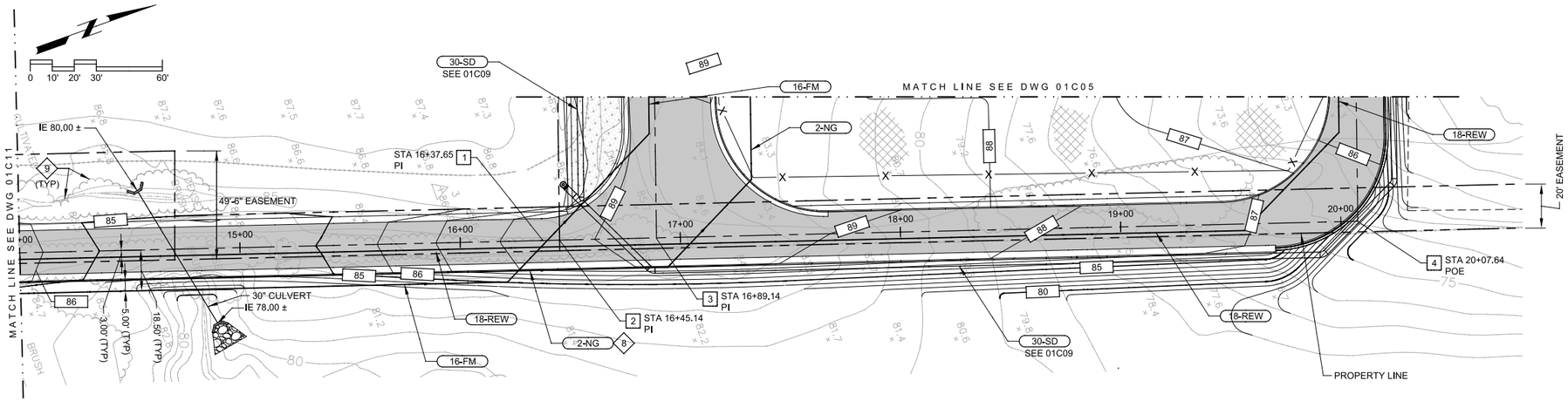

PLAN

SCALE: 1"=30'
FILE: 8930A11-01-C-0101

LEGEND

AC PAVEMENT 6

RIP RAP

LANDSCAPING

GENERAL NOTES

1. SEE DWG 01C10 FOR GENERAL NOTES.
2. SEE DWG 01C10 FOR KEY NOTES.

REV	DATE	BY	DESCRIPTION

DESIGNED LJE
DRAWN GAT
CHECKED RLG
DATE SEPT 2013

REGISTERED PROFESSIONAL ENGINEER ANDREW D. WIENER No. 75948 CIVIL STATE OF CALIFORNIA 9/16/2013

carollo

SAN LUIS OBISPO COUNTY

SAN LUIS OBISPO COUNTY
LOS OSOS WATER RECYCLING FACILITY PROJECT
CIVIL
PLANT ENTRANCE ROAD - PLAN & PROFILE
STA. 14+00.00 TO STA. 20+07.64

VERIFY SCALES
BAR IS ONE INCH ON ORIGINAL DRAWING
0 1"
IF NOT ONE INCH ON THIS SHEET, ADJUST SCALES ACCORDINGLY

JOB NO. 8930A.11
DRAWING NO. 01C12
SHEET NO. OF 549

PROJECT NO. 8930A.11 FILE NAME: 8930A1101C12.dgn

Plot Date: 17-SEP-2013 10:48:04 AM
User: DDonk
PlotScale: 2:1
DesignScript: Carollo_Std_Pen_v0905.pen
ColorTable: gshade.ctb
Model: Layout1
LAST SAVED BY: bhawes

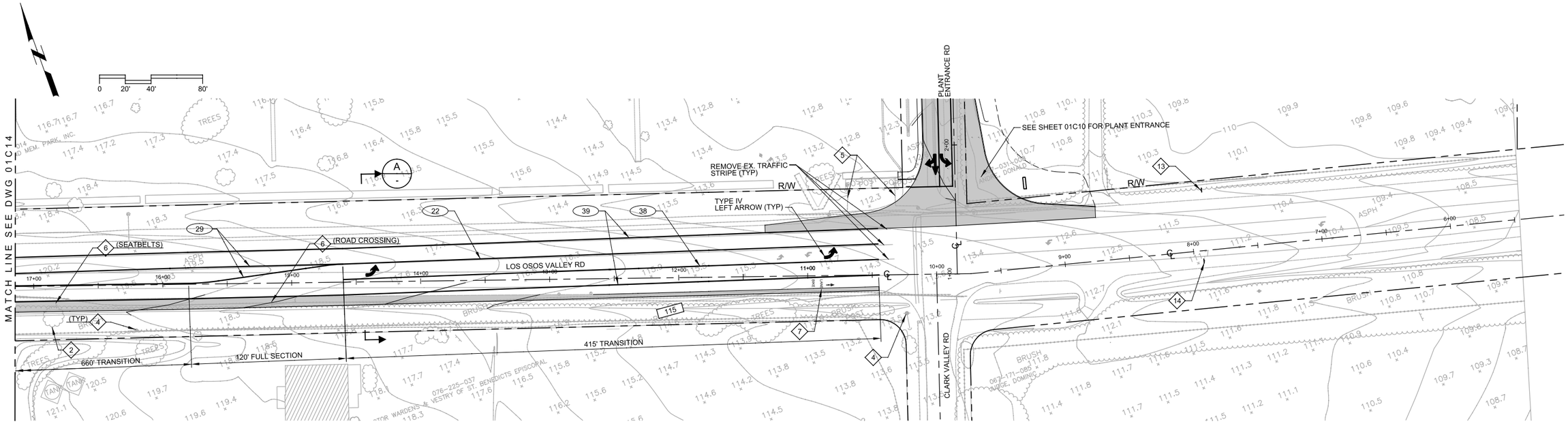

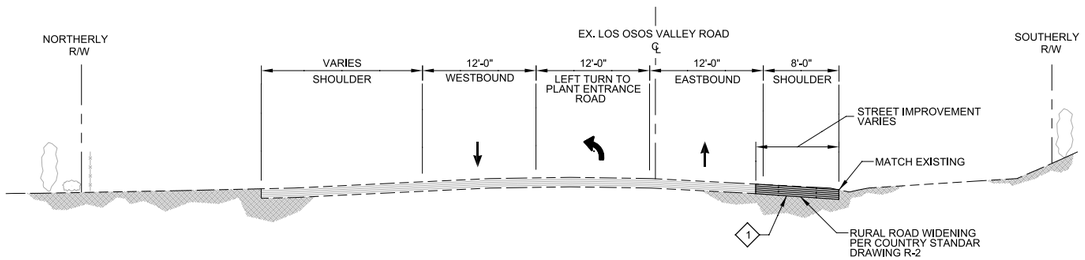

A CROSS SECTION

SCALE: 1/8"=1'-0"
FILE: 8930A-01-C-0306

GENERAL NOTES

1. THE FOLLOWING GENERAL NOTES AND KEY NOTES APPLY TO DWGS 01C013 THRU 01C14.
2. REPLACE OR REPAIR EXISTING ITEMS DAMAGED BY CONTRACTOR'S ACTIVITIES.
3. EXISTING PAVEMENT CONSISTS OF 8" AC OVER 15" ABC.
4. SAW CUT EXISTING PAVEMENT 1 FOOT FROM EDGE FOR BUTTING WITH NEW PAVEMENT.
5. REMOVE EXISTING ROAD STRIPING AS REQUIRED.
6. WHERE REQUIRED, TRIM TREES AND BUSHES PER SLO COUNTY STANDARD DRAWING NO. A-5a AND M-5a. PROVIDE CLEARING AND GRUBBING.
7. WORK BY OTHERS ON LOS OSOS VALLEY ROAD: BURIED PIPING, FIBER-OPTIC CONDUITS AND WIRING, AND ASSOCIATED MANHOLES TO BE CONSTRUCTED BY LOS OSOS COLLECTION SYSTEM PROJECT.
8. 3 FOOT MINIMUM PAVING WIDTH REQUIRED FOR NEW PAVEMENT. SAW CUT EXISTING AS REQUIRED TO ACHIEVE MINIMUM WIDTH.
9. EACH ADVANCE WARNING SIGN IN EACH DIRECTION OF TRAVEL SHALL BE EQUIPPED WITH AT LEAST TWO FLAGS FOR DAYTIME CLOSURE. EACH FLAG SHALL BE AT LEAST 16" X 16" IN SIZE AND SHALL BE ORANGE OR FLUORESCENT RED-ORANGE IN COLOR. FLASHING BEACONS SHALL BE PLACED AT EACH ADVANCE WARNING SIGN FOR LANE CLOSURE DURING OURS OF DARKNESS.
10. TRAFFIC CONES SHALL BE SPACED AT 25' MAX. ALL CONES USED FOR LANE CLOSURES DURING THE HOURS OF DARKNESS SHALL BE FITTED WITH RETROREFLECTIVE BANDS (OR SLEEVES),
11. PORTABLE DELINEATORS, SPACED AT 25' MAX, MAY BE USED INSTEAD OF CONES FOR DAYTIME CLOSURES ONLY.
12. SEE SPECIFICATION SECTION 01571 FOR TRAFFIC CONTROL REQUIREMENTS.

KEY NOTES

1. CONSTRUCT 4" AC OVER 18" ABC OVER RECOMPACTED SUBGRADE PER SPECIFICATIONS.
2. REMOVE EXISTING TREE AS REQUIRED FOR NEW CONSTRUCTION.
3. PROTECT EXISTING MANHOLES.
4. CAUTION: EXISTING OVERHEAD POWER LINES AND POWER POLES.
5. CAUTION: EXISTING HIGH PRESSURE GAS LINE.
6. RESET EXISTING TRAFFIC SIGN
7. STRIPE 'BIKE LANE' WITH DIRECTIONAL ARROW ON PAVEMENT.
8. TRANSITION TO EXISTING DRIVEWAY TO PRIVATE RESIDENCE.
9. CONSTRUCT AC DIKE PER COUNTY STANDARD DRAWINGS SERIES A-1 AND STANDARD DRAWING C-3. HMA CURBS SHALL USE PG 70-10 BINDER, AS SPECIFIED IN SECTION 92 OF THE STATE STANDARD SPECIFICATIONS.
10. RESET MAILBOX
11. HYDROSEED
12. PHONE/FIBER OPTIC MANHOLES. RAISE OR LOWER MANHOLES APPROPRIATELY TO MATCH NEW PAVEMENT SURFACE
13. MUTCD W20-1 "ROAD WORK AHEAD" SIGN. PLACE 600' TO 1000' FROM EDGE OF LOVR WIDENING WORK AREA.
14. CA C14 "END ROAD WORK" SIGN. PLACE 600' TO 1000' FROM EDGE OF LOVR WIDENING WORK AREA.

LEGEND

AC PAVEMENT

PAVEMENT DELINEATION CALTRANS DETAIL NUMBER (XX)

REV	DATE	BY	DESCRIPTION

DESIGNED HGK
DRAWN GAT
CHECKED RLG
DATE SEPT 2013

REGISTERED PROFESSIONAL ENGINEER ANDREW D. WIENER No. 15948 CIVIL STATE OF CALIFORNIA 9/16/2013

carollo

SAN LUIS OBISPO COUNTY

SAN LUIS OBISPO COUNTY
LOS OSOS WATER RECYCLING FACILITY PROJECT
CIVIL
LOS OSOS VALLEY ROAD IMPROVEMENTS - I

VERIFY SCALES
BAR IS ONE INCH ON ORIGINAL DRAWING
0 1"
IF NOT ONE INCH ON THIS SHEET, ADJUST SCALES ACCORDINGLY

JOB NO. 8930A.11
DRAWING NO. 01C13
SHEET NO. OF 549

PROJECT NO. 8930A.11 FILE NAME: 8930A1101C13.dgn

LAST SAVED BY: ddonk Model: Layout1 ColorTable: gshade.ctb DesignScript: Carollo_Std_Pen_v0905.pen PlotScale: 2:1 User: DDonk Plot Date: 17-SEP-2013 10:03:09 AM

Plot Date: 17-SEP-2013 10:03:24 AM
User: DDonk
PlotScale: 2:1
DesignScript: Carollo_Std_Pen_v0905.pen
ColorTable: gshade.ctb
Model: Layout1
LAST SAVED BY: ddonk

GENERAL NOTES

1. SEE DWG 01C13 FOR GENERAL NOTES.
2. SEE DWG 01C13 FOR KEY NOTES.

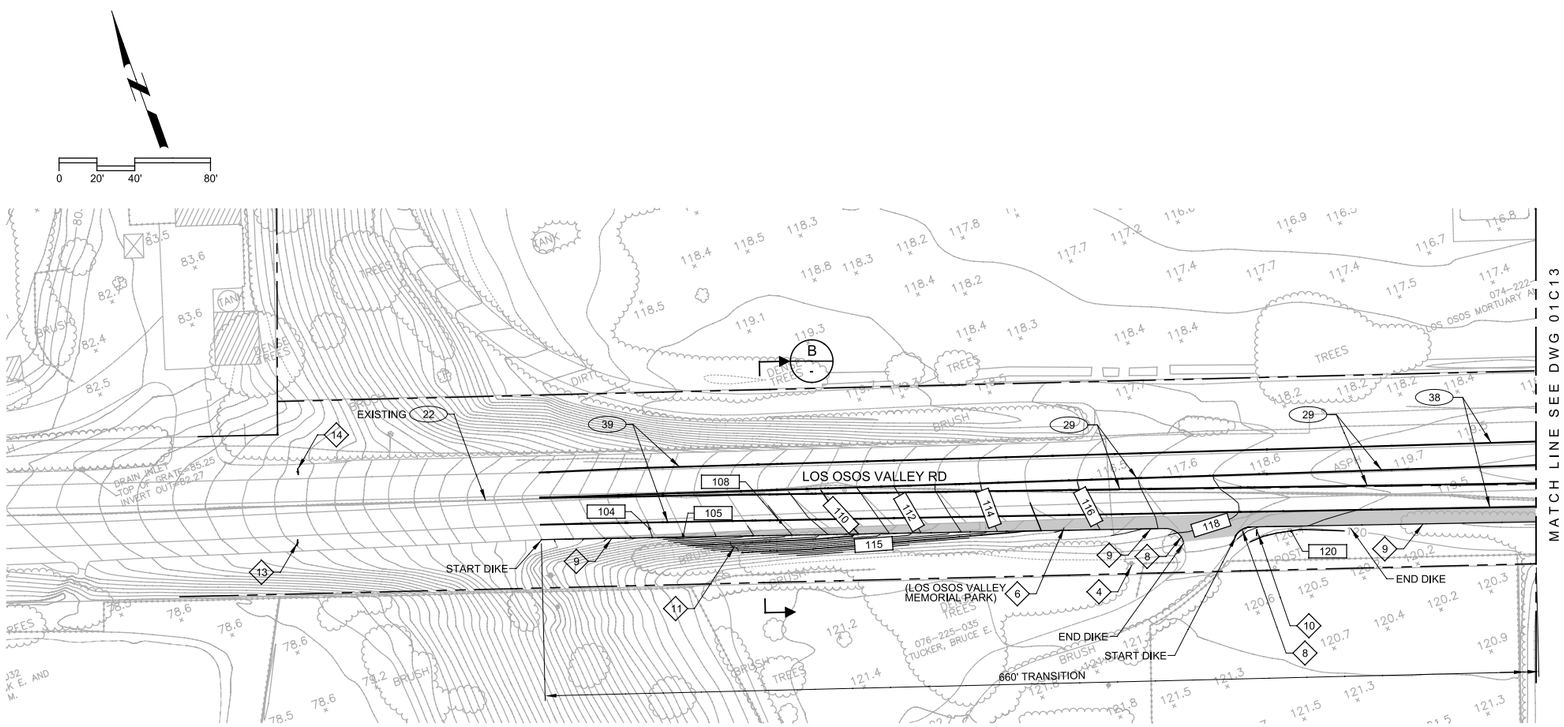

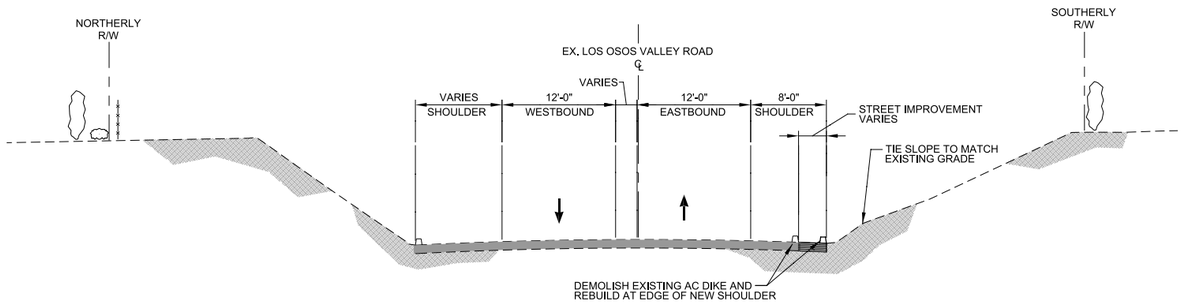

B CROSS SECTION

SCALE: 1/8"=1'-0"
FILE: 8930A-01-C-0306

LEGEND

AC PAVEMENT

PAVEMENT DELINEATION CALTRANS DETAIL NUMBER

REV	DATE	BY	DESCRIPTION

DESIGNED HGK
DRAWN GAT
CHECKED RLG
DATE SEPT 2013

REGISTERED PROFESSIONAL ENGINEER ANDREW D. WIENER No. 15948 CIVIL STATE OF CALIFORNIA 9/16/2013

carollo

SAN LUIS OBISPO COUNTY

SAN LUIS OBISPO COUNTY
LOS OSOS WATER RECYCLING FACILITY PROJECT
CIVIL
LOS OSOS VALLEY ROAD IMPROVEMENTS - II

VERIFY SCALES
BAR IS ONE INCH ON ORIGINAL DRAWING
0 1"
IF NOT ONE INCH ON THIS SHEET, ADJUST SCALES ACCORDINGLY

JOB NO. 8930A.11
DRAWING NO. 01C14
SHEET NO. OF 549

PROJECT NO. 8930A.11 FILE NAME: 8930A1101C14.dgn

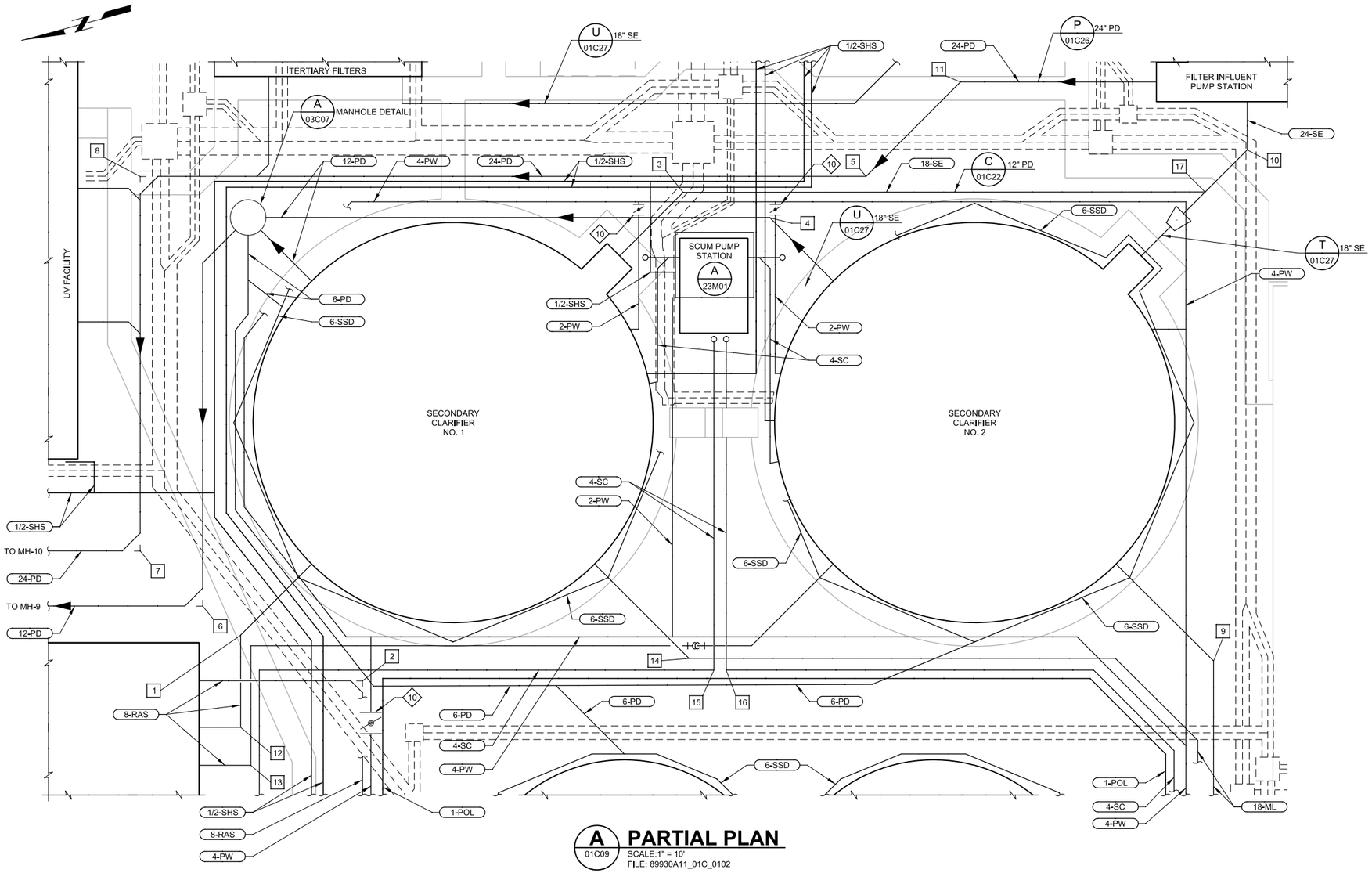

A PARTIAL PLAN

A / 01C09

SCALE:1" = 10'

FILE: 89930A11_01C_0102

GENERAL NOTES

1. SEE DWG 01C06 FOR GENERAL NOTES.
2. SEE DWG 01C06 FOR KEY NOTES.

COORDINATE CONTROL DATA

POINT	NORTH	EAST	ELEV	STATION
1	N:2310176.69	E:5726373.93	62.52	
2	N:2310159.73	E:5726360.00	71.50	
3	N:2310081.89	E:5726420.46	PROFILE S	1+15.17
4	N:2310069.47	E:5726411.72	PROFILE C	1+15.16
5	N:2310051.83	E:5726413.03	PROFILE P	1+55.59
6	N:2310181.17	E:5726380.64	PROFILE C	2+70.97
7	N:2310188.14	E:5726392.85	PROFILE P	3+38.58
8	N:2310167.73	E:5726452.62	PROFILE P	2+77.18
9	N:2310022.76	E:5726316.76	63.91	
10	N:2309989.52	E:5726396.48	PROFILE S	2+13.28
11	N:2310031.60	E:5726422.96	PROFILE P	1+33.05
12	N:2310181.72	E:5726359.22	61.82	
13	N:2310182.16	E:5726352.59	61.82	
14	N:2310106.39	E:5726345.79	63.91	
15	N:2310103.05	E:5726342.53	78.51	
16	N:2310101.08	E:5726341.86	78.51	
17	N:2309998.54	E:5726392.05	PROFILE S	2+03.23

REV	DATE	BY	DESCRIPTION

DESIGNED ADW
DRAWN NRG
CHECKED RLG
DATE SEPT 2013

REGISTERED PROFESSIONAL ENGINEER — BRIAN GIL KANOUSE — No. 52686 — CIVIL — STATE OF CALIFORNIA — 9/16/2013

carollo

SAN LUIS OBISPO COUNTY

SAN LUIS OBISPO COUNTY

LOS OSOS WATER RECYCLING FACILITY PROJECT

CIVIL

YARD PIPING PARTIAL PLANS

VERIFY SCALES
BAR IS ONE INCH ON ORIGINAL DRAWING
0 1"
IF NOT ONE INCH ON THIS SHEET, ADJUST SCALES ACCORDINGLY

JOB NO. 8930A.11
DRAWING NO. 01C15
SHEET NO. OF 549

PROJECT NO. 8930A.11 FILE NAME: 8930A1101C15.dgn

Plot Date: 17-SEP-2013 10:48:22 AM User: DDonk PlotScale: 2:1 DesignScript: Carollo_Std_Pen_v0905.pen ColorTable: gshade.ctb Model: Layout1 LAST SAVED BY: bhawes

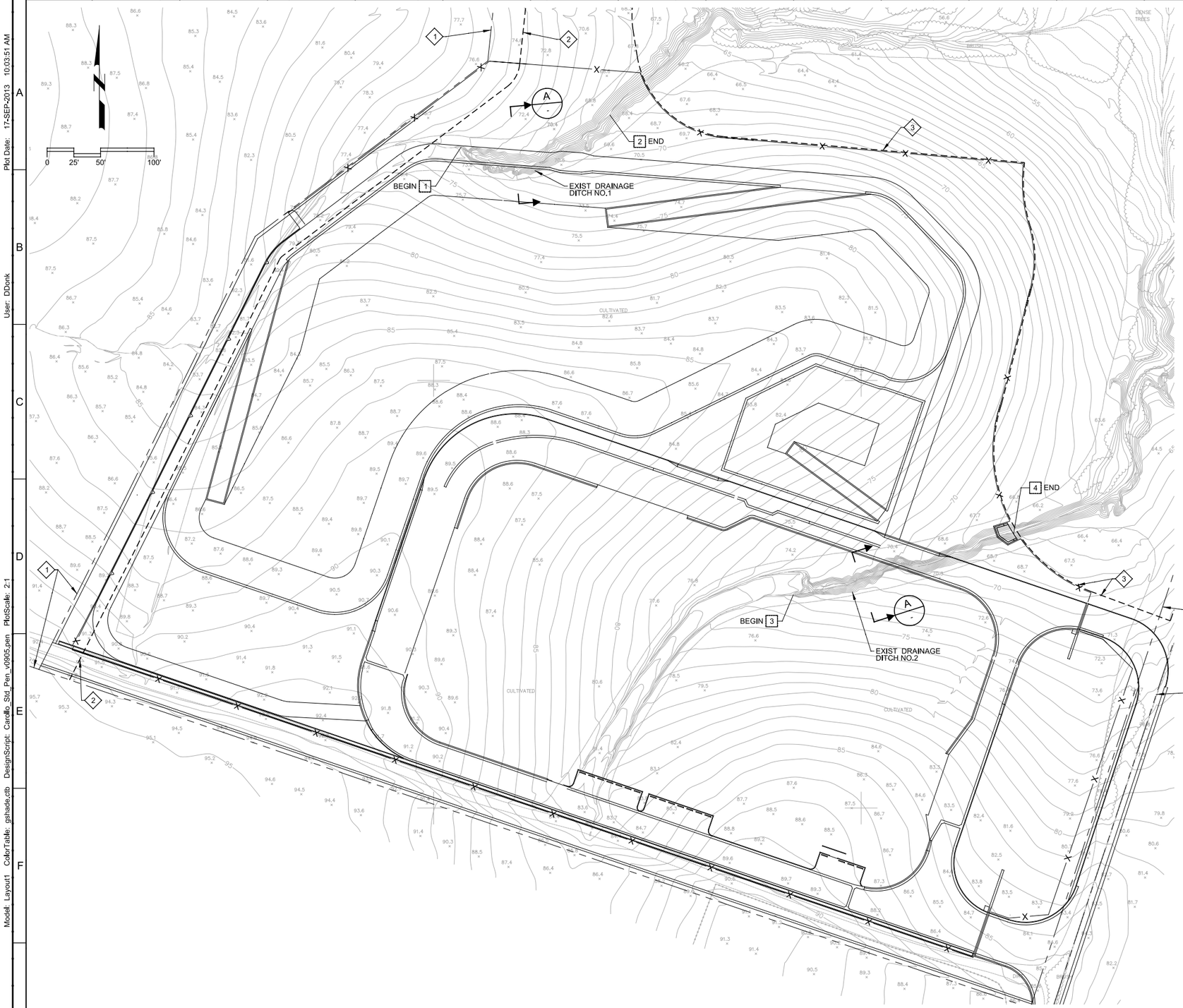

KEY NOTES

1. PROPERTY LINE
2. LIMIT OF SETBACK FROM PROPERTY LINE
3. LIMIT OF SETBACK FROM DESIGNATED ENVIRONMENTALLY SENSITIVE HABITAT AREA
4. EL VARIES.
5. EXCAVATE TO AT LEAST 1 FOOT BELOW BOTTOM OF DRAINAGE DITCH AND 1 FOOT BEYOND SIDEWALLS TO EXPOSE STIFF TO HARD ALLUVIUM. EXCAVATE BEYOND SIDEWALLS WITH BENCHES.
6. SUBGRADE IS CLAY AND SENSITIVE TO CHANGES IN MOISTURE. SCARIFY SOIL TO DEPTH OF 9 INCHES AND COMPACT TO 90% RELATIVE COMPACTION, UNO.
7. PLACE COMPACTED FILL TO AT LEAST 90 PERCENT RELATIVE COMPACTION, UNO.
8. DRAINAGE DITCH NO. 1: BOTTOM EL VARIES APPROX FROM 60 TO 72. BOTTOM WIDTH IS APPROX 3 FT.
9. DRAINAGE DITCH NO. 2: BOTTOM EL VARIES APPROX FROM 59 TO 73. BOTTOM WIDTH IS APPROX 5 FT.

GENERAL NOTES

1. SEE 01C01 FOR GENERAL CIVIL NOTES.
2. FOR GENERAL STRUCTURAL NOTES AND EARTHWORK DETAILS, SEE DWG 00G10 & 00G11.
3. STATIONING AND DIMENSINOS INDICATED ON THIS DRAWING ARE APPROXIMATE.
4. REMOVE EXISTING SOIL TO A DEPTH OF 3 FEET BELOW EXISTING SITE GRADES THROUGHOUT THE ENTIRE PLANT SITE. BOTTOM OF EXCAVATION SHALL BE FREE OF LOOSE OR UNSUITABLE MATERIAL. ONSITE SOILS (PREDOMINANTLY CLAY) MAY BE REUSED, PROVIDED THAT THEY MEET SPECIFICATIONS.
5. SEE YARD PIPING AND ELECTRICAL DRAWINGS FOR BURIED PIPING, DUCTBANKS, AND UTILITIES THAT ARE REQUIRED FOR NEW CONSTRUCTION.

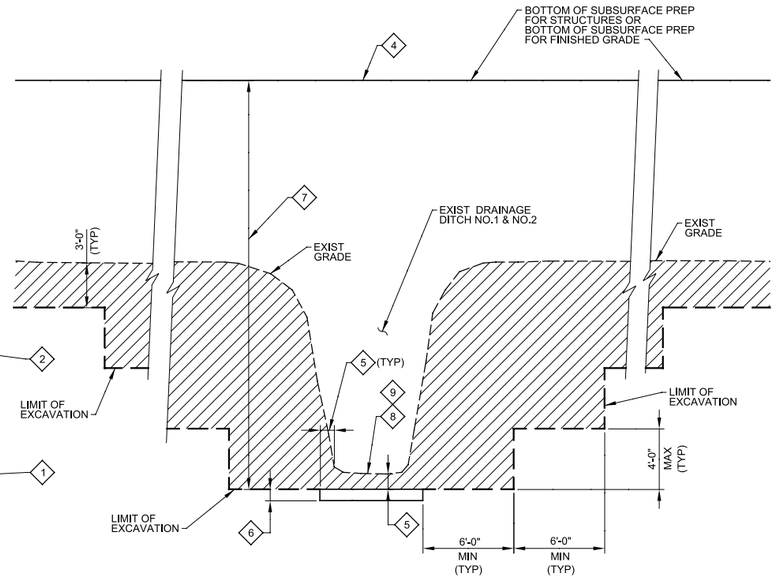

A TYPICAL SECTION

SCALE: NTS
FILE: 01-C-0314

COORDINATE CONTROL

	N	E
1	N 2310618.0	E 5726025.0
2	N 2310648.0	E 5726165.0
3	N 2310200.0	E 5726336.0
4	N 2310256.5	E 5726542.5

REV	DATE	BY	DESCRIPTION

DESIGNED HGK
DRAWN DJD
CHECKED RLG
DATE SEPT 2013

REGISTERED PROFESSIONAL ENGINEER — HAN GIL KANG — No. 62686 — CIVIL — STATE OF CALIFORNIA — 9/16/2013

carollo

SAN LUIS OBISPO COUNTY

SAN LUIS OBISPO COUNTY

LOS OSOS WATER RECYCLING FACILITY PROJECT

CIVIL

FILL PLACEMENT IN DRAINAGE DITCHES PLAN AND SECTION

VERIFY SCALES
BAR IS ONE INCH ON ORIGINAL DRAWING
0 1"
IF NOT ONE INCH ON THIS SHEET, ADJUST SCALES ACCORDINGLY

JOB NO. 8930A.11
DRAWING NO. 01C16
SHEET NO. OF 549

PROJECT NO. 8930A.11 FILE NAME: 8930A1101C16.dgn

Plot Date: 17-SEP-2013 10:03:51 AM
User: DDonk
Model: Layout1 ColorTable: gshade.ctb DesignScript: Carollo_Std_Pen_v0905.pen PlotScale: 2:1
LAST SAVED BY: ddonk

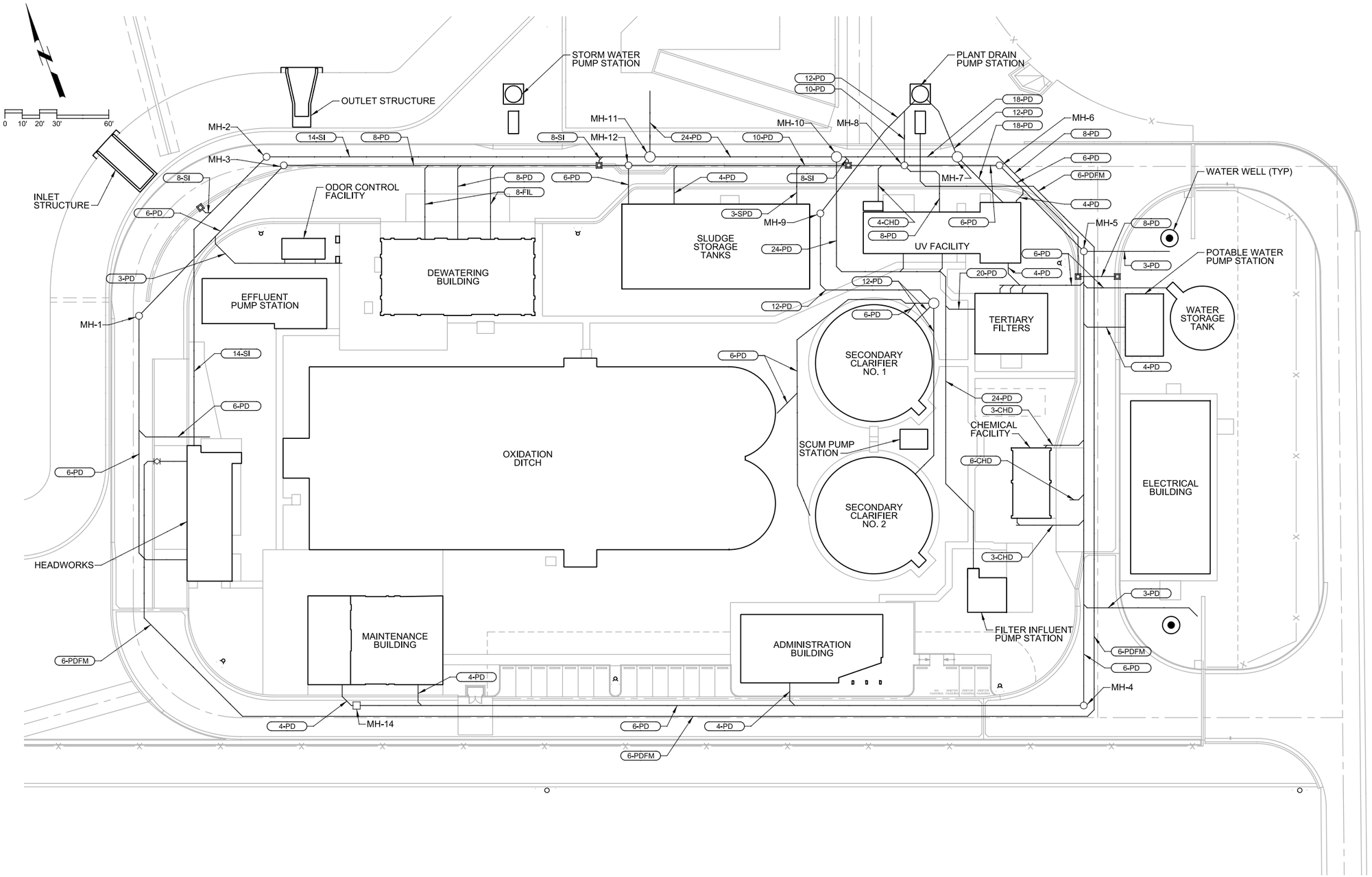

GENERAL NOTES

1. FOR MANHOLE PIPE ORIENTATION DETAILS SEE DRAWING 01C18.

REV	DATE	BY	DESCRIPTION

DESIGNED ADW
DRAWN NRG
CHECKED HGK
DATE SEPT 2013

REGISTERED PROFESSIONAL ENGINEER — BRIAN GIL KANOUSE — No. 52686 — CIVIL — STATE OF CALIFORNIA — 9/16/2013

SAN LUIS OBISPO COUNTY

LOS OSOS WATER RECYCLING FACILITY PROJECT

CIVIL

SANITARY SEWER & PLANT DRAIN SITE PIPING SCHEMATIC

VERIFY SCALES
BAR IS ONE INCH ON ORIGINAL DRAWING
0 1"
IF NOT ONE INCH ON THIS SHEET, ADJUST SCALES ACCORDINGLY

JOB NO. 8930A.11
DRAWING NO. 01C17
SHEET NO. OF 549

PROJECT NO. 8930A.11 FILE NAME: 8930A1101C17.dgn

Plot Date: 17-SEP-2013 10:04:04 AM
User: DDonk
PlotScale: 2:1
DesignScript: Carollo_Std_Pen_v0905.pen
ColorTable: gshade.ctb
Model: Layout1
LAST SAVED BY: ngriffith

Plot Date: 17-SEP-2013 10:04:15 AM
User: DDonk
PlotScale: 2:1
DesignScript: Carollo_Std_Pen_v0905.pen
ColorTable: gshade.ctb
Model: Layout1
LAST SAVED BY: rgriffith

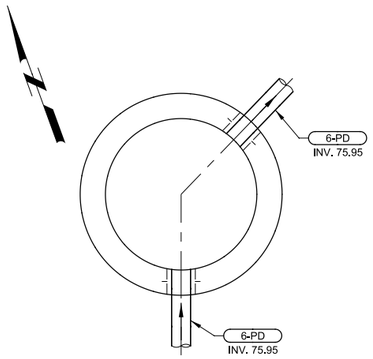

1 MH-1 DETAIL
01C08 SCALE: 1/2" = 1'-0"
FILE: 8930A11-01-C-0401

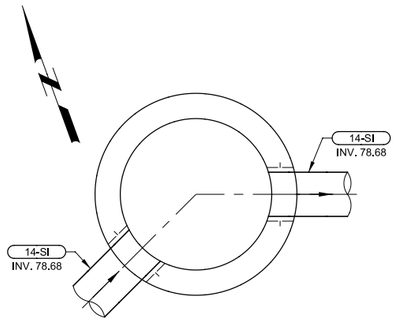

2 MH-2 DETAIL
01C08 SCALE: 1/2" = 1'-0"
FILE: 8930A11-01-C-0401

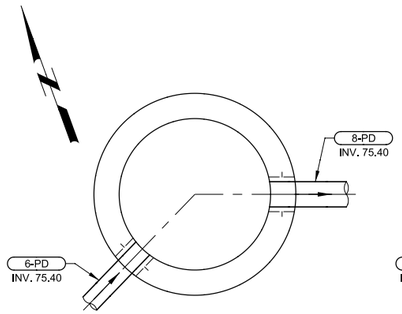

3 MH-3 DETAIL
01C08 SCALE: 1/2" = 1'-0"
FILE: 8930A11-01-C-0401

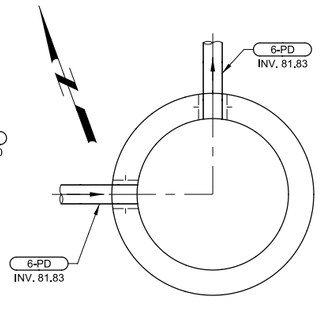

4 MH-4 DETAIL
01C09 SCALE: 1/2" = 1'-0"
FILE: 8930A11-01-C-0401

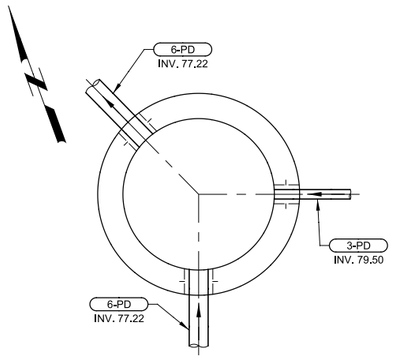

5 MH-5 DETAIL
01C09 SCALE: 1/2" = 1'-0"
FILE: 8930A11-01-C-0401

GENERAL NOTES

1. FOR GENERAL STRUCTURAL NOTES SEE DWG 00G10.
2. FOR EARTHWORK DETAILS SEE 00G11 TYPICAL SECTION A.
3. FOR GENERAL CIVIL NOTES SEE 01C01.
4. PIPE PENETRATIONS SIMILAR TO P342/TYP.

KEY NOTES

1 INLINE CHECK VALVE

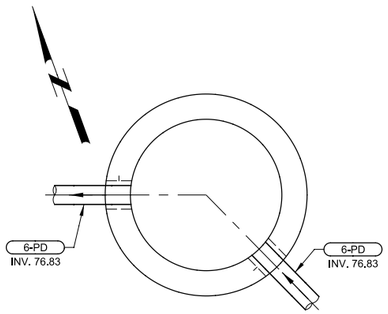

6 MH-6 DETAIL
01C09 SCALE: 1/2" = 1'-0"
FILE: 8930A11-01-C-0401

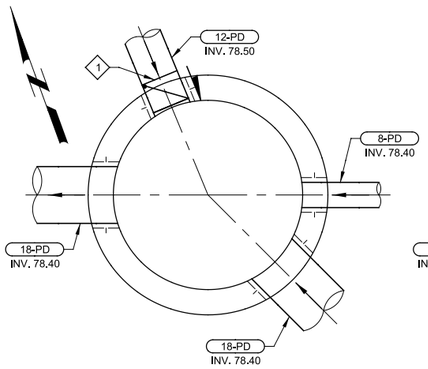

7 MH-7 DETAIL
01C09 SCALE: 1/2" = 1'-0"
FILE: 8930A11-01-C-0401

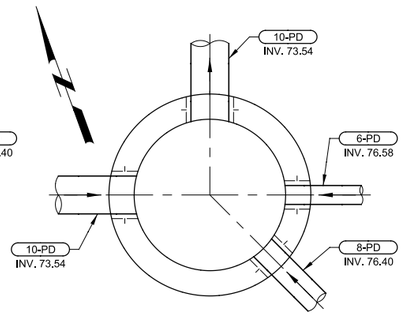

8 MH-8 DETAIL
01C09 SCALE: 1/2" = 1'-0"
FILE: 8930A11-01-C-0401

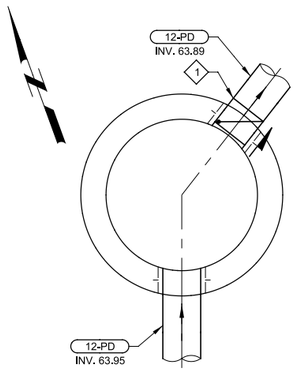

9 MH-9 DETAIL
01C09 SCALE: 1/2" = 1'-0"
FILE: 8930A11-01-C-0401

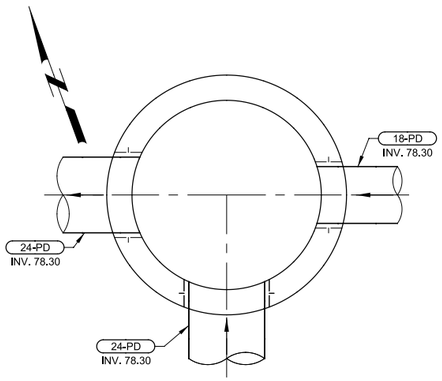

10 MH-10 DETAIL
01C09 SCALE: 1/2" = 1'-0"
FILE: 8930A11-01-C-0401

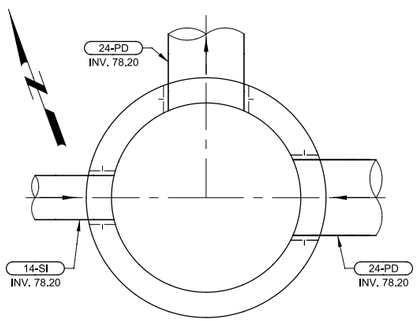

11 MH-11 DETAIL
01C09 SCALE: 1/2" = 1'-0"
FILE: 8930A11-01-C-0401

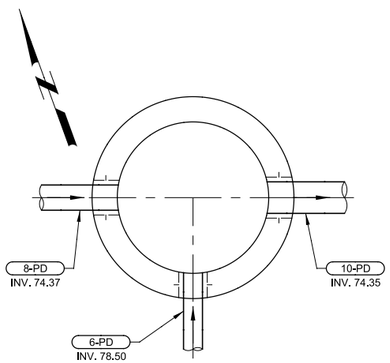

12 MH-12 DETAIL
01C09 SCALE: 1/2" = 1'-0"
FILE: 8930A11-01-C-0401

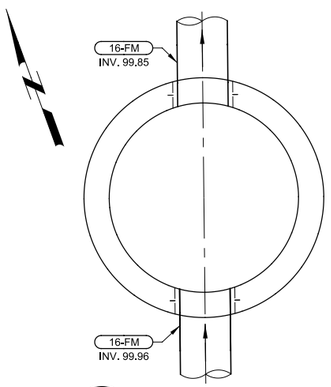

13 MH-13 DETAIL
01C11 SCALE: 1/2" = 1'-0"
FILE: 8930A11-01-C-0401

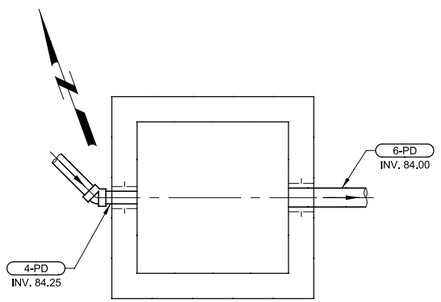

14 MH-14 DETAIL
01C08 SCALE: 1/2" = 1'-0"
FILE: 8930A11-01-C-0401

REV	DATE	BY	DESCRIPTION

DESIGNED DLM
DRAWN NRG
CHECKED HGK
DATE SEPT 2013

REGISTERED PROFESSIONAL ENGINEER — BRIAN GIL KAISER — No. 62686 — CIVIL — STATE OF CALIFORNIA — 9/16/2013

carollo®

SAN LUIS OBISPO COUNTY

SAN LUIS OBISPO COUNTY
LOS OSOS WATER RECYCLING FACILITY PROJECT
CIVIL
MANHOLE PIPE ORIENTATION DETAILS

VERIFY SCALES
BAR IS ONE INCH ON ORIGINAL DRAWING
0 1"
IF NOT ONE INCH ON THIS SHEET, ADJUST SCALES ACCORDINGLY

JOB NO. 8930A.11
DRAWING NO. 01C18
SHEET NO. OF 549

PROJECT NO. 8930A.11 FILE NAME: 8930A1101C18.dgn

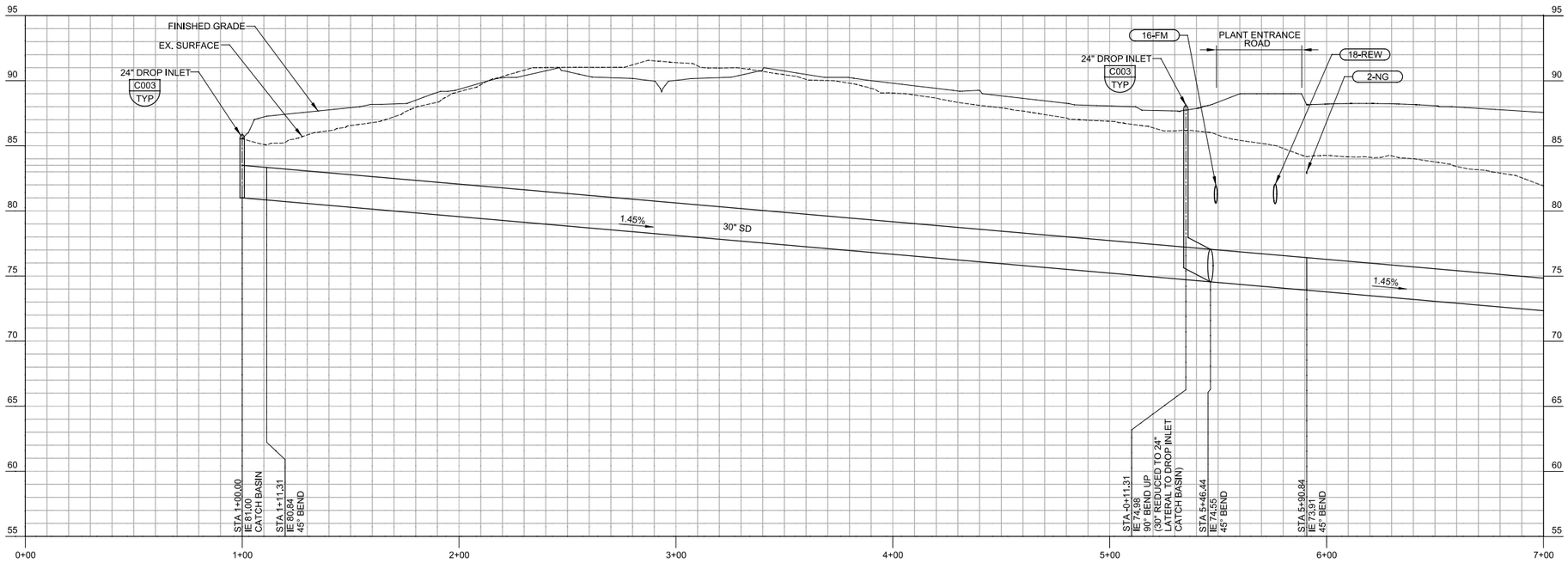

A 01C08 01C09 PROFILE 30" SD

HORIZ SCALE: 1"=30'
VERT SCALE: 1"=5'
FILE: 8930A11-01-C-0111

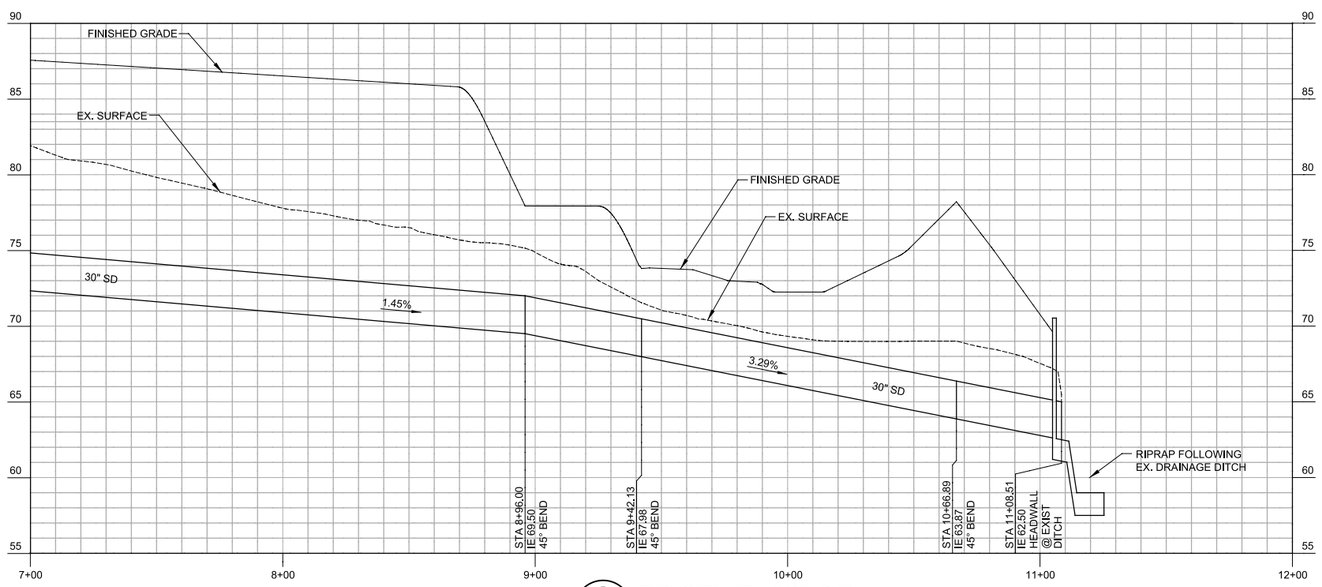

A 01C09 PROFILE -30" SD

HORIZ SCALE: 1"=30'
VERT SCALE: 1"=5'
FILE: 8930A11-01-C-0111

REV	DATE	BY	DESCRIPTION

DESIGNED LJE
DRAWN GAT
CHECKED RLG
DATE SEPT 2013

REGISTERED PROFESSIONAL ENGINEER ANDREW D. WIENER No. 75948 CIVIL STATE OF CALIFORNIA
9/16/2013

carollo

SAN LUIS OBISPO COUNTY

SAN LUIS OBISPO COUNTY
LOS OSOS WATER RECYCLING FACILITY PROJECT
CIVIL
30" STORM DRAIN PROFILE

VERIFY SCALES
BAR IS ONE INCH ON ORIGINAL DRAWING
0 1"
IF NOT ONE INCH ON THIS SHEET, ADJUST SCALES ACCORDINGLY

JOB NO. 8930A.11
DRAWING NO. 01C19
SHEET NO. OF 549

PROJECT NO. 8930A.11
FILE NAME: 8930A1101C19.dgn

Plot Date: 17-SEP-2013 10:04:27 AM
User: DDonk
PlotScale: 2:1
DesignScript: Carollo_Std_Pen_v0905.pen
ColorTable: gshade.ctb
Model: Layout1
LAST SAVED BY: bhawes

SHEET 01C02

POINT	NORTH	EAST	ELEV	DESC
1	N:2310604.01	E:5725969.92	86.14	FG
2	N:2310614.14	E:5726004.52	86.14	FG
3	N:2310620.60	E:5726014.04	86.00	FG
4	N:2310605.50	E:5726211.16	86.00	FG
5	N:2310561.07	E:5726160.54	70.00	FG
6	N:2310543.21	E:5726162.78	70.00	FG
7	N:2310581.00	E:5726319.30	86.00	FG
8	N:2310530.99	E:5726322.32	70.00	FG
9	N:2310541.76	E:5725875.44	86.00	FG
10	N:2310596.37	E:5726066.39	84.00	FG
11	N:2310605.35	E:5726119.22	85.00	FG
12	N:2310603.82	E:5726139.17	85.00	FG
13	N:2310609.73	E:5725965.60	86.00	FG
14	N:2310621.29	E:5726005.06	86.00	FG
15	N:2310687.80	E:5726193.38	65.57	FS

SHEET 01C03

POINT	NORTH	EAST	ELEV	DESC
1	N:2310583.10	E:5726409.72	86.14	FG
2	N:2310567.75	E:5726442.44	86.14	FG
3	N:2310518.44	E:5726490.24	86.14	FG
4	N:2310466.45	E:5726501.89	86.14	FG
5	N:2310428.91	E:5726479.55	86.00	FG
6	N:2310402.74	E:5726426.23	86.00	FG
7	N:2310424.25	E:5726363.28	86.00	FG
8	N:2310423.47	E:5726351.06	86.00	FG
9	N:2310454.03	E:5726452.20	69.00	FG (STR COOR)
10	N:2310381.97	E:5726293.74	86.00	FG
11	N:2310379.43	E:5726457.37	86.00	FG
12	N:2310413.43	E:5726357.83	86.00	FG
13	N:2310574.12	E:5726409.03	86.00	FG
14	N:2310463.96	E:5726455.60	69.00	FG (STR COOR)
15	N:2310566.56	E:5726453.57	86.00	FG
16	N:2310590.24	E:5726410.27	86.00	FG
17	N:2310572.73	E:5726447.59	86.00	FG
18	N:2310405.50	E:5726421.26	85.50	FG
19	N:2310392.25	E:5726416.74	85.50	FG
20	N:2310398.71	E:5726397.81	85.50	FG
21	N:2310411.96	E:5726402.34	85.50	FG

SHEET 01C04

POINT	NORTH	EAST	ELEV	DESC
1	N:2310524.20	E:5725864.05	86.14	FG
2	N:2310506.12	E:5725849.05	86.14	FG
3	N:2310288.62	E:5725786.85	70.00	FG
4	N:2310284.00	E:5725804.24	70.00	FG
5	N:2310443.26	E:5725827.89	86.00	FG
6	N:2310294.76	E:5725754.17	86.00	FG
7	N:2310427.31	E:5725875.39	70.00	FG
8	N:2310222.42	E:5725783.94	86.00	FG
9	N:2310185.88	E:5725890.93	86.00	FG
10	N:2310218.28	E:5725956.95	86.00	FG
11	N:2310190.93	E:5725691.83	89.90	FG
12	N:2310143.44	E:5725711.20	92.10	FG
13	N:2310154.94	E:5725643.50	92.50	FL
14	N:2310135.11	E:5725633.50	95.70	FS
15	N:2310138.21	E:5725933.83	87.78	FL
16	N:2310072.98	E:5725941.86	88.32	FL

SHEET 01C04 (CONT'D)

POINT	NORTH	EAST	ELEV	DESC
17	N:2310124.13	E:5725975.03	88.34	FL
18	N:2310060.83	E:5726005.67	88.77	FL
19	N:2310020.11	E:5726124.91	89.81	FS
20	N:2310023.22	E:5726131.26	89.90	FS
21	N:2310312.36	E:5725989.08	86.00	FG
22	N:2310372.17	E:5726110.95	86.00	FG
23	N:2310363.67	E:5726105.94	86.10	FS
24	N:2310289.42	E:5726030.95	85.95	FL
25	N:2310320.58	E:5726094.43	86.31	FL
26	N:2310350.49	E:5726174.44	86.00	FG
27	N:2310271.74	E:5726237.36	85.67	FL
28	N:2310300.63	E:5726152.83	85.67	FL
29	N:2310307.28	E:5725991.04	86.07	FS
30	N:2310261.69	E:5726021.48	86.57	FL
31	N:2309921.83	E:5726326.04	91.49	FS
32	N:2310055.62	E:5725983.81	88.75	FS
33	N:2310134.33	E:5725945.18	88.03	FL
34	N:2310303.24	E:5726002.87	85.92	FS
35	N:2310351.84	E:5726101.90	85.85	FS
36	N:2310302.89	E:5726044.76	86.30	FG (STR COOR)
37	N:2310279.62	E:5726112.89	86.35	FG (STR COOR)
38	N:2310196.19	E:5726026.59	87.50	FG (STR COOR)
39	N:2310131.84	E:5726004.61	88.10	FG (STR COOR)
40	N:2310234.61	E:5726086.87	87.00	FG (STR COOR)
41	N:2310109.62	E:5726043.31	88.25	FG (STR COOR)
42	N:2310084.41	E:5726117.12	88.95	FG (STR COOR)
43	N:2310026.38	E:5726106.55	89.37	FL
44	N:2310165.89	E:5725943.28	86.87	FL
45	N:2310262.75	E:5726234.29	86.20	FG (STR COOR)
46	N:2310377.20	E:5726049.60	84.00	FG
47	N:2310124.31	E:5725975.09	88.34	FL
48	N:2310081.93	E:5725937.31	88.07	FL
49	N:2310309.94	E:5726095.82	86.35	FG (STR COOR)
50	N:2310301.86	E:5726119.47	86.35	FG (STR COOR)
51	N:2310035.52	E:5726135.46	90.16	FS
52	N:2310291.64	E:5726149.75	86.20	FG (STR COOR)
53	N:2310240.88	E:5725836.65	69.00	FG (STR COOR)
54	N:2310234.90	E:5725854.16	69.00	FG (STR COOR)
55	N:2310391.50	E:5726010.61	69.00	FG (STR COOR)
56	N:2310398.45	E:5726023.34	69.00	FG (STR COOR)
57	N:2310402.23	E:5726129.70	69.00	FG (STR COOR)
58	N:2310396.25	E:5726147.20	69.00	FG (STR COOR)
59	N:2310092.41	E:5725864.67	92.02	FG
60	N:2310094.24	E:5725855.26	92.10	FG
61	N:2310153.31	E:5725648.28	92.50	FS
62	N:2310352.53	E:5726206.52	86.00	FG
63	N:2310511.69	E:5725863.64	86.00	FG
64	N:2310043.79	E:5725979.77	88.70	FL
65	N:2310175.51	E:5725946.04	86.80	FL
66	N:2310352.96	E:5726245.79	86.00	FG (STR COOR)
67	N:2310349.19	E:5726256.83	86.00	FG (STR COOR)
68	N:2310324.95	E:5726219.31	86.65	FS
69	N:2310321.24	E:5726228.61	86.23	FL
70	N:2310109.67	E:5726125.75	86.00	FS
71	N:2310256.02	E:5726061.85	86.80	FG
72	N:2310249.59	E:5726066.61	86.90	FG
73	N:2310170.75	E:5726029.64	87.60	FG
74	N:2310163.78	E:5726032.01	87.65	FG

SHEET 01C04 (CONT'D)

POINT	NORTH	EAST	ELEV	DESC
75	N:2310111.64	E:5726057.41	87.00	FG
76	N:2310106.75	E:5726059.95	87.00	FG
77	N:2310213.13	E:5726165.23	87.00	FG
78	N:2310210.18	E:5726194.15	87.00	FG
79	N:2310238.08	E:5726106.50	86.75	FS
80	N:2310217.95	E:5726165.43	86.75	FS
81	N:2310143.29	E:5726027.33	88.00	FS
82	N:2310307.32	E:5726130.15	86.31	FS
83	N:2310134.62	E:5726052.71	88.00	FG (STR COOR)
84	N:2310065.32	E:5726177.34	87.00	FG
85	N:2310300.54	E:5726010.77	85.67	FL
86	N:2310342.00	E:5726057.06	85.26	FL
87	N:2310340.90	E:5726135.75	85.77	FL
88	N:2310317.03	E:5726205.63	86.26	FL
89	N:2310297.82	E:5725987.81	86.12	FL
90	N:2310280.31	E:5725989.49	86.25	FS
91	N:2310275.28	E:5725991.42	86.30	FS
92	N:2310155.36	E:5725926.11	87.50	FG
93	N:2310152.06	E:5725921.82	87.50	FG
94	N:2310018.97	E:5726125.16	89.74	FL
95	N:2309996.73	E:5726117.56	89.84	FL
96	N:2310121.26	E:5725974.15	88.35	FL
97	N:2310113.00	E:5725972.11	88.40	FL
98	N:2310138.38	E:5725933.89	87.78	FL
99	N:2310088.67	E:5725933.36	88.56	FS
100	N:2310261.35	E:5726238.39	86.20	FS
101	N:2310218.77	E:5726223.83	86.80	FS
102	N:2310232.77	E:5726170.50	86.70	FS
103	N:2310246.00	E:5726109.20	86.70	FS
104	N:2310256.55	E:5726078.33	86.70	FS
105	N:2310167.77	E:5726048.01	87.60	FS
106	N:2310166.12	E:5726052.82	87.60	FS
107	N:2310139.52	E:5726038.36	88.08	FS
108	N:2310126.09	E:5726021.45	88.20	FS
109	N:2310046.71	E:5726104.24	89.90	FS

SHEET 01C05

POINT	NORTH	EAST	ELEV	DESC
1	N:2310279.61	E:5726423.28	86.00	FG
2	N:2310268.33	E:5726414.98	86.00	FG
3	N:2310253.77	E:5726429.24	86.10	FS
4	N:2309818.79	E:5726559.64	88.35	FS
5	N:2309864.18	E:5726507.20	89.13	FS
6	N:2310133.05	E:5726545.49	84.50	FL
7	N:2310237.64	E:5726473.40	85.77	FL
8	N:2310317.29	E:5726271.65	86.00	FG
9	N:2310271.56	E:5726299.83	85.91	FL
10	N:2310205.65	E:5726492.80	84.89	FL
11	N:2310142.18	E:5726523.95	84.50	FL
12	N:2310083.05	E:5726503.76	86.86	FL
13	N:2310050.81	E:5726480.02	87.07	FL
14	N:2310134.43	E:5726546.67	84.50	FL
15	N:2310165.93	E:5726609.08	85.06	FL
16	N:2310222.99	E:5726519.37	86.00	FS
17	N:2310160.12	E:5726626.11	85.15	FL
18	N:2310176.92	E:5726652.72	85.93	FS
19	N:2310113.30	E:5726684.35	86.32	FS
20	N:2309964.40	E:5726489.12	87.72	FL

SHEET 01C05 (CONT'D)

POINT	NORTH	EAST	ELEV	DESC
21	N:2309901.56	E:5726519.97	88.69	FL
22	N:2309895.51	E:5726537.68	88.92	FL
23	N:2309864.35	E:5726505.15	88.73	FS
24	N:2309854.47	E:5726535.63	88.91	FS
25	N:2309804.07	E:5726560.69	88.29	FS
26	N:2309927.15	E:5726601.32	89.32	FL
27	N:2310097.13	E:5726657.43	87.22	FS
28	N:2309925.46	E:5726402.97	88.25	FL
29	N:2309958.12	E:5726461.09	87.88	FL
30	N:2309969.79	E:5726465.07	87.82	FL
31	N:2309994.03	E:5726460.63	87.80	FS
32	N:2309931.96	E:5726399.32	88.58	FS
33	N:2309944.00	E:5726403.43	88.84	FS
34	N:2309973.89	E:5726260.24	89.11	FS
35	N:2309992.54	E:5726261.32	89.49	FS
36	N:2309999.18	E:5726197.02	89.52	FS
37	N:2310001.44	E:5726190.39	89.55	FS
38	N:2310012.90	E:5726201.70	89.81	FS
39	N:2310015.16	E:5726195.08	89.84	FS
40	N:2309926.99	E:5726400.35	88.58	FS
41	N:2310308.32	E:5726266.47	85.86	FL
42	N:2309945.92	E:5726357.59	88.70	FS
43	N:2309861.04	E:5726504.02	88.75	FL
44	N:2310342.78	E:5726337.33	71.00	FG
45	N:2310260.82	E:5726269.32	85.79	FL
46	N:2310265.17	E:5726288.13	86.25	FG (STR COOR)
47	N:2310230.10	E:5726390.80	85.95	FG (STR COOR)
48	N:2310047.92	E:5726367.82	87.75	FG (STR COOR)
49	N:2310131.19	E:5726396.26	87.00	FG (STR COOR)
50	N:2310158.45	E:5726495.25	84.80	FG (STR COOR)
51	N:2310191.57	E:5726506.56	85.10	FG (STR COOR)
52	N:2310150.45	E:5726464.52	85.00	FG (STR COOR)
53	N:2310136.88	E:5726504.26	84.70	FG (STR COOR)
54	N:2310084.95	E:5726413.32	87.30	FG (STR COOR)
55	N:2310074.07	E:5726409.60	87.30	FG (STR COOR)
56	N:2310045.64	E:5726495.16	87.40	FG (STR COOR)
57	N:2309988.86	E:5726475.77	87.80	FG (STR COOR)
58	N:2310001.40	E:5726409.13	88.05	FG (STR COOR)
59	N:2309977.43	E:5726400.94	88.15	FG (STR COOR)
60	N:2310018.62	E:5726276.48	89.00	FG (STR COOR)
61	N:2309992.08	E:5726354.20	89.00	FG (STR COOR)
62	N:2310122.08	E:5726546.68	85.25	FG (STR COOR)
63	N:2310114.97	E:5726567.50	86.10	FG (STR COOR)
64	N:2310062.64	E:5726529.59	86.10	FS (STR COOR)
65	N:2309968.00	E:5726497.27	88.30	FS (STR COOR)
66	N:2310094.45	E:5726584.26	86.50	FG (STR COOR)
67	N:2309960.32	E:5726461.84	87.87	FL
68	N:2309987.91	E:5726475.45	87.71	FL
69	N:2309981.27	E:5726494.89	87.50	FL
70	N:2310271.27	E:5726295.25	85.89	FL
71	N:2310261.16	E:5726274.67	85.81	FL
72	N:2310277.00	E:5726468.18	86.00	FL
73	N:2310273.23	E:5726479.22	86.00	FG (STR COOR)
74	N:2309895.57	E:5726452.41	88.90	FG (STR COOR)
75	N:2310196.98	E:5726555.35	85.70	FS
76	N:2310113.14	E:5726684.83	86.82	FS
77	N:2310193.07	E:5726410.91	86.25	FS
78	N:2309958.22	E:5726361.79	88.96	FG

SHEET 01C05 (CONT'D)

POINT	NORTH	EAST	ELEV	DESC
79	N:2310177.39	E:5726652.88	86.43	FS
80	N:2310072.88	E:5726316.24	87.75	FS
81	N:2310010.91	E:5726382.64	88.10	FG
82	N:2310094.19	E:5726411.08	87.25	FG (STR COOR)
83	N:2310087.25	E:5726531.08	86.28	FG (STR COOR)
84	N:2310096.88	E:5726533.84	85.90	FL
85	N:2310331.50	E:5726329.04	71.00	FG
86	N:2310350.90	E:5726281.01	86.00	FG
87	N:2310305.56	E:5726276.09	86.10	FS
88	N:2310258.80	E:5726413.00	86.10	FS
89	N:2310255.09	E:5726422.30	85.77	FL
90	N:2310234.88	E:5726483.02	86.10	FS
91	N:2310271.50	E:5726279.76	87.00	FG
92	N:2310275.85	E:5726287.50	87.00	FG
93	N:2310229.66	E:5726413.36	87.00	FG
94	N:2310224.90	E:5726415.95	87.00	FG
95	N:2310162.70	E:5726457.13	85.85	FG
96	N:2310155.08	E:5726461.16	85.30	FG
97	N:2310154.29	E:5726348.88	87.00	FG
98	N:2310077.60	E:5726427.88	87.50	FG
99	N:2310068.57	E:5726434.70	87.40	FG
100	N:2310038.43	E:5726516.00	87.00	FG
101	N:2310010.99	E:5726634.33	87.00	FG
102	N:2309959.78	E:5726240.80	89.25	FS
103	N:2310012.51	E:5726405.69	87.90	FG
104	N:2310006.56	E:5726408.68	87.95	FG
105	N:2310020.01	E:5726296.54	87.00	FG
106	N:2310025.64	E:5726293.70	87.00	FG
107	N:2310059.86	E:5726179.69	87.00	FG
108	N:2310290.63	E:5726282.91	85.65	FL
109	N:2310287.80	E:5726291.21	85.69	FL
110	N:2310282.81	E:5726293.66	85.71	FL
111	N:2310274.84	E:5726316.99	85.84	FL
112	N:2310277.29	E:5726321.97	85.86	FL
113	N:2310267.23	E:5726351.42	86.02	FL
114	N:2310244.07	E:5726419.24	85.67	FL
115	N:2310140.38	E:5726524.04	84.50	FL
116	N:2310292.69	E:5726438.56	86.00	FG
117	N:2309870.09	E:5726503.34	88.70	FS
118	N:2309982.07	E:5726462.38	87.68	FS
119	N:2310068.50	E:5726524.68	87.04	FL
120	N:2309942.80	E:5726351.24	88.62	FS
121	N:2309980.24	E:5726257.12	89.23	FS
122	N:2309905.05	E:5726386.00	88.42	FL
123	N:2309927.28	E:5726393.59	88.30	FL
124	N:2310252.56	E:5726545.15	65.00	FS
125	N:2310248.79	E:5726537.46	66.00	FS
126	N:2310254.73	E:5726529.39	66.00	FS
127	N:2310262.06	E:5726526.83	66.00	FS
128	N:2310265.23	E:5726537.44	66.00	FS
129	N:2310207.44	E:5726244.62	86.90	FS
130	N:2310193.07	E:5726239.71	86.92	FS
131	N:2310171.34	E:5726350.31	86.90	FS
132	N:2310178.05	E:5726427.03	86.30	FS
133	N:2310170.15	E:5726450.16	86.10	FS
134	N:2310159.23	E:5726446.43	86.10	FS
135	N:2310151.03	E:5726450.45	85.90	FS
136	N:2310120.90	E:5726432.58	88.10	FS

REV	DATE	BY	DESCRIPTION

DESIGNED HGK
DRAWN GAT
CHECKED RLG
DATE SEPT 2013

REGISTERED PROFESSIONAL ENGINEER — HAN GIL KANG — No. 62686 — CIVIL — STATE OF CALIFORNIA — 9/16/2013

carollo

SAN LUIS OBISPO COUNTY

SAN LUIS OBISPO COUNTY
LOS OSOS WATER RECYCLING FACILITY PROJECT
CIVIL
PAVING AND GRADING - COORDINATE CONTROL DATA - I

VERIFY SCALES
BAR IS ONE INCH ON ORIGINAL DRAWING
0 1"
IF NOT ONE INCH ON THIS SHEET, ADJUST SCALES ACCORDINGLY

JOB NO. 8930A.11
DRAWING NO. 01C20
SHEET NO. OF 549

PROJECT NO. 8930A.11 FILE NAME: 8930A1101C20.dgn

LAST SAVED BY: ddonk
Model: Layout1 ColorTable: gshade.ctb DesignScript: Carollo_Std_Pen_v0905.pen PlotScale: 2:1
Plot Date: 17-SEP-2013 10:04:39 AM User: DDonk

SHEET 01C05 (CONT'D)

POINT	NORTH	EAST	ELEV	DESC
137	N:2310115.51	E:5726448.36	85.55	FS
138	N:2310081.42	E:5726436.71	87.00	FS
139	N:2310074.75	E:5726439.98	87.25	FS
140	N:2310060.81	E:5726435.22	87.50	FS
141	N:2310057.53	E:5726428.55	87.60	FS
142	N:2310015.89	E:5726414.33	87.85	FS
143	N:2310011.25	E:5726427.95	87.75	FS
144	N:2310010.32	E:5726428.40	87.75	FS
145	N:2310008.00	E:5726435.20	87.65	FS
146	N:2309993.82	E:5726397.19	88.18	FS
147	N:2309988.86	E:5726387.09	88.85	FS
148	N:2310003.71	E:5726355.97	88.95	FS

SHEET 01C10

POINT	NORTH	EAST	ELEV	DESC
1	N:2308426.47	E:5726065.87	112.4±	FS
2	N:2308422.19	E:5726078.81	112.37	FS
3	N:2308410.50	E:5726034.15	112.88	FS
4	N:2308444.64	E:5726093.07	112.08	FS
5	N:2308634.21	E:5726155.65	109.94	FS
6	N:2308656.42	E:5726155.56	109.2±	FS
7	N:2308707.49	E:5726172.42	109.4±	FS
8	N:2308722.40	E:5726203.64	110.0±	FS
9	N:2308355.31	E:5726202.62	110.9±	FS
10	N:2308370.59	E:5726166.23	110.86	FS
11	N:2308424.63	E:5726136.22	110.74	FS
12	N:2308507.05	E:5726149.48	110.59	FS
13	N:2308822.02	E:5726251.93	108.71	FS
14	N:2308838.45	E:5726257.49	108.58	FS
15	N:2308626.67	E:5726178.43	110.23	FS
16	N:2308636.59	E:5726181.94	110.15	FS
17	N:2308342.36	E:5726084.58	113.61	FS
18	N:2308670.21	E:5726194.63	109.89	FS
19	N:2308428.09	E:5725956.81	113.7±	FS
20	N:2308422.52	E:5725955.05	114.0±	FS
21	N:2308347.42	E:5726200.16	111.3±	FS
22	N:2308429.75	E:5726075.05	112.98	FS
23	N:2308431.72	E:5726081.63	112.86	FS
24	N:2308445.89	E:5726089.27	112.66	FS
25	N:2308432.16	E:5726067.75	113.02	FS

SHEET 01C11

POINT	NORTH	EAST	ELEV	DESC
1	N:2309289.12	E:5726411.73	98.89	FS
2	N:2309305.03	E:5726443.28	97.61	FS
3	N:2309316.38	E:5726447.10	97.51	FS
4	N:2309347.97	E:5726431.16	97.27	FS
5	N:2309285.67	E:5726502.15	100.0±	FS
6	N:2309294.81	E:5726512.76	100.0±	FS
7	N:2309298.35	E:5726535.27	100.0±	FS
8	N:2309297.00	E:5726551.31	100.0±	FS
9	N:2309299.78	E:5726554.32	100.0±	FS
10	N:2309308.10	E:5726548.65	100.0±	FS
11	N:2309002.73	E:5726306.78	106.57	FS
12	N:2309009.22	E:5726308.83	106.44	FS
13	N:2308967.93	E:5726297.28	87.00	FG
14	N:2309328.03	E:5726418.73	87.00	FG
15	N:2309542.96	E:5726486.59	87.00	FG

SHEET 01C12

POINT	NORTH	EAST	ELEV	DESC
1	N:2309800.94	E:5726570.18	88.54	FS
2	N:2309808.05	E:5726572.53	89.71	FS
3	N:2309849.83	E:5726586.33	89.34	FS
4	N:2310152.29	E:5726686.16		FS

CURVE DATA				
NO.	RADIUS	DELTA	LENGTH	TANGENT
C1	50.00	76°22'20"	66.65	39.33
C2	6.00	69°50'49"	7.31	4.19
C3	46.00	20°09'11"	16.18	8.17
C4	35.00	37°00'00"	22.60	11.71
C5	25.00	87°35'20"	38.22	23.97
C6	250.00	2°24'40"	10.52	5.26
C7	250.00	3°58'34"	17.35	8.68
C8	250.00	1°33'38"	6.81	3.40
C9	25.00	89°56'05"	39.24	24.97
C10	50.00	61°29'20"	53.66	29.74
C11	25.00	54°16'42"	23.68	12.81
C12	25.00	90°04'57"	39.31	25.04
C13	51.00	41°23'38"	36.85	19.27
C14	51.00	41°30'35"	36.95	19.33
C15	51.00	62°58'02"	56.05	31.23
C16	42.00	90°00'00"	65.97	42.00
C17	16.00	45°00'00"	12.57	6.63
C18	42.00	45°00'00"	32.99	17.40
C19	34.00	97°54'38"	58.10	39.05
C20	52.00	97°32'38"	88.53	59.34
C21	52.00	90°00'00"	81.68	52.00
C22	74.00	90°00'00"	116.24	74.00
C23	50.00	90°00'00"	78.54	50.00
C24	50.00	90°00'03"	78.54	50.00
C25	90.50	90°00'03"	142.16	90.50
C26	96.00	90°00'03"	150.80	96.00
C27	51.00	89°17'40"	79.48	50.38
C28	5.00	90°00'00"	7.85	5.00
C29	3.50	180°00'04"	11.00	1.00
C30	50.00	89°59'57"	78.54	50.00
C31	50.00	83°37'14"	72.97	44.72
C32	50.00	88°42'59"	77.42	48.89
C33	50.00	89°24'36"	78.02	49.49
C34	50.00	87°42'27"	76.54	48.04
C35	50.00	90°35'21"	79.05	50.52
C36	40.00	89°24'52"	62.42	39.59
C37	50.50	89°24'36"	78.81	49.98
C38	5.00	61°04'16"	5.33	2.95
C39	62.00	90°00'00"	97.39	62.00
C40	78.00	90°00'03"	122.52	78.00
C41	5.00	90°00'00"	7.85	5.00
C42	58.17	41°23'38"	42.02	21.98
C43	58.17	41°30'35"	42.14	22.04
C44	7.00	45°00'00"	5.50	2.90
C45	6.00	45°00'00"	4.71	2.49
C46	51.08	26°35'09"	23.70	12.07
C47	72.69	49°17'45"	62.54	33.35
C48	127.01	35°20'42"	78.35	40.47
C49	5.00	90°00'00"	7.85	5.00
C50	35.00	15°44'38"	9.62	4.84
C51	50.00	84°32'59"	73.78	45.46

REV	DATE	BY	DESCRIPTION

DESIGNED HGK
DRAWN GAT
CHECKED RLG
DATE SEPT 2013

REGISTERED PROFESSIONAL ENGINEER — JUAN GIL KASTNER — No. 62686 — CIVIL — STATE OF CALIFORNIA — 9/16/2013

carollo

SAN LUIS OBISPO COUNTY

SAN LUIS OBISPO COUNTY
LOS OSOS WATER RECYCLING FACILITY PROJECT
CIVIL
PAVING AND GRADING - COORDINATE CONTROL DATA - II

VERIFY SCALES
BAR IS ONE INCH ON ORIGINAL DRAWING
0 1"
IF NOT ONE INCH ON THIS SHEET, ADJUST SCALES ACCORDINGLY

JOB NO. 8930A.11
DRAWING NO. 01C21
SHEET NO. OF 549

PROJECT NO. 8930A.11 FILE NAME: 8930A1101C21.dgn

LAST SAVED BY: ddonk PlotScale: 2:1 DesignScript: Carollo_Std_Pen_v0905.pen ColorTable: gshade.ctb Model: Layout1 Plot Date: 17-SEP-2013 10:04:52 AM User: DDonk

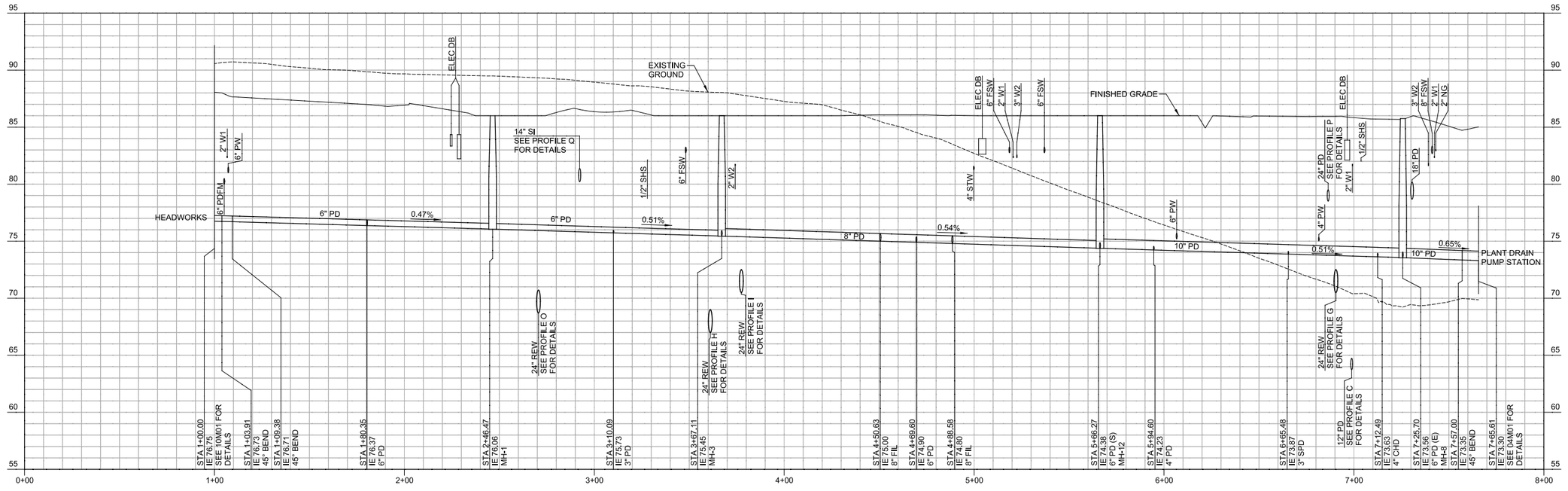

B PROFILE-6" TO 10" PD

01C08 01C09

HORIZ SCALE: 1"=30'
VERT SCALE: 1"=5'
FILE: 8930A11-01-C-0111

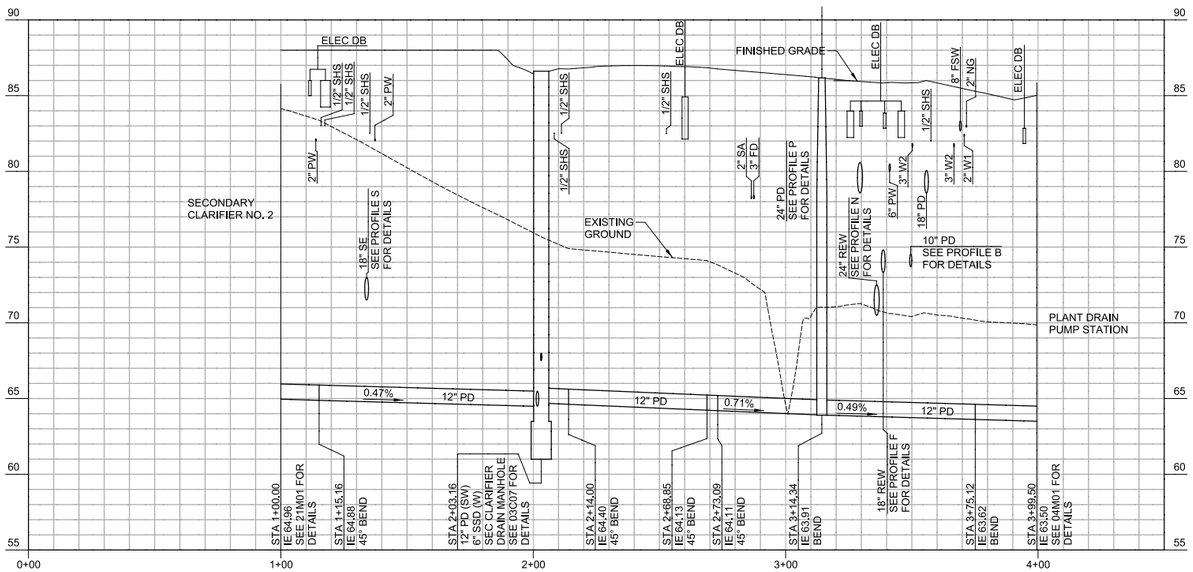

C PROFILE-12" PD

01C09

HORIZ SCALE: 1"=30'
VERT SCALE: 1"=5'
FILE: 8930A11-01-C-0111

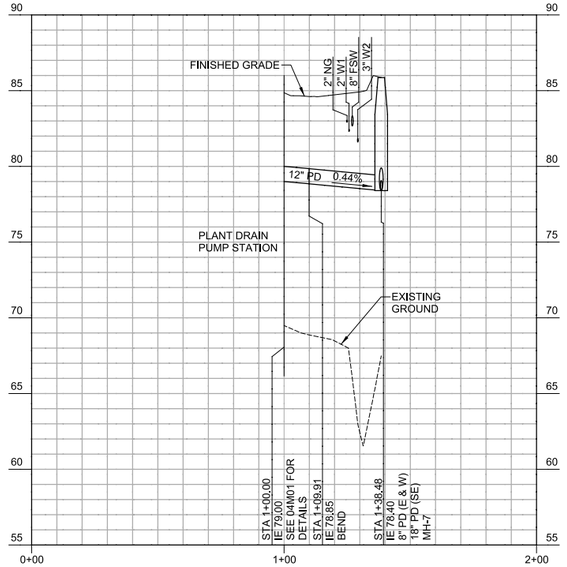

D PROFILE-12" PD

01C09

HORIZ SCALE: 1"=30'
VERT SCALE: 1"=5'
FILE: 8930A11-01-C-0111

REV	DATE	BY	DESCRIPTION

DESIGNED LJE
DRAWN GAT
CHECKED RLG
DATE SEPT 2013

REGISTERED PROFESSIONAL ENGINEER ANDREW D. WIESNER No. 75948 CIVIL STATE OF CALIFORNIA 9/16/2013

carollo

SAN LUIS OBISPO COUNTY

SAN LUIS OBISPO COUNTY
LOS OSOS WATER RECYCLING FACILITY PROJECT
CIVIL
PROFILES B, C, D

VERIFY SCALES
BAR IS ONE INCH ON ORIGINAL DRAWING
0 1"
IF NOT ONE INCH ON THIS SHEET, ADJUST SCALES ACCORDINGLY

JOB NO. 8930A.11
DRAWING NO. 01C22
SHEET NO. OF 549

PROJECT NO. 8930A.11 FILE NAME: 8930A1101C22.dgn

Plot Date: 17-SEP-2013 10:05:05 AM User: DDonk Model: Layout1 ColorTable: gshade.ctb DesignScript: Carollo_Std_Pen_v0905.pen PlotScale: 2:1 LAST SAVED BY: bhawes

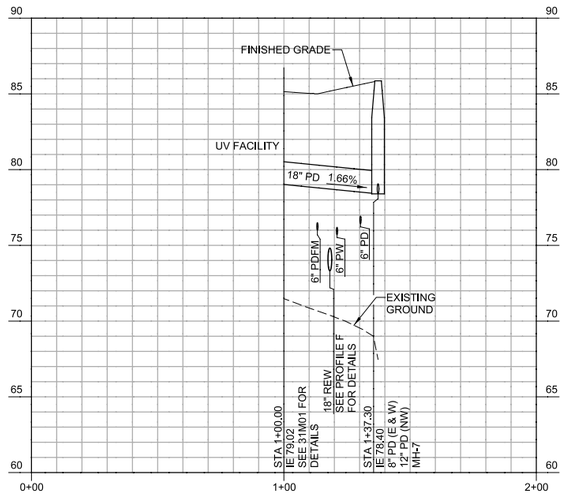

E PROFILE-18" PD

01C09

HORIZ SCALE: 1"=30'
VERT SCALE: 1"=5'
FILE: 8930A11-01-C-0111

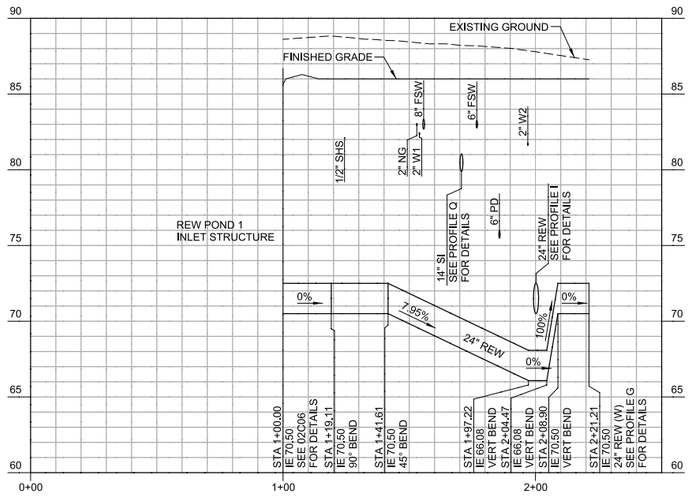

H PROFILE-24" REW

01C08

HORIZ SCALE: 1"=30'
VERT SCALE: 1"=5'
FILE: 8930A11-01-C-0111

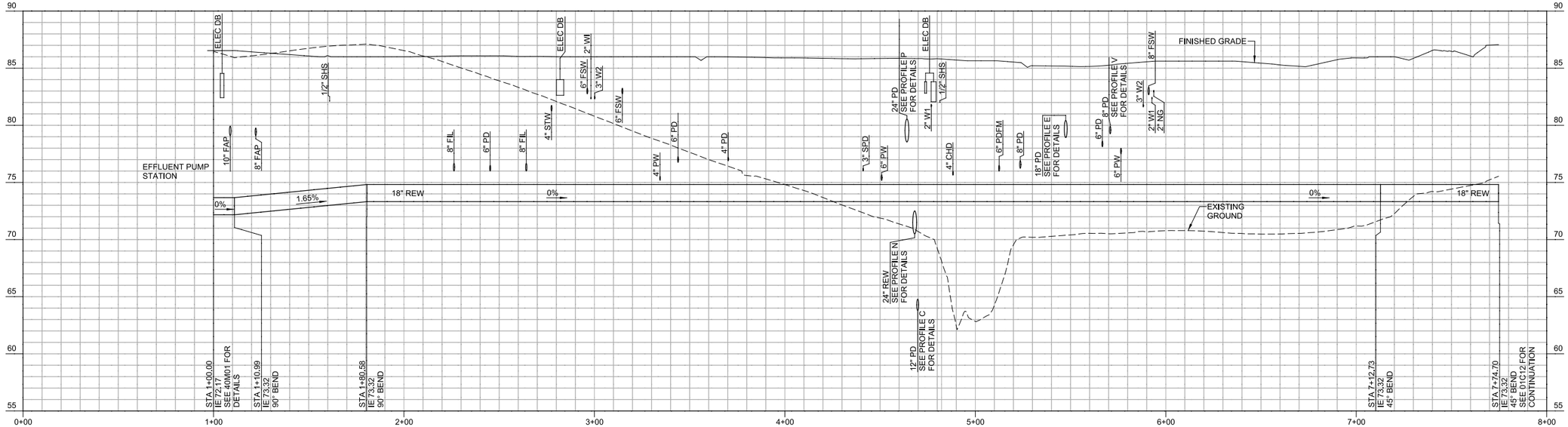

F PROFILE-18" REW

01C08
01C09

HORIZ SCALE: 1"=30'
VERT SCALE: 1"=5'
FILE: 8930A11-01-C-0111

REV	DATE	BY	DESCRIPTION

DESIGNED LJE
DRAWN GAT
CHECKED RLG
DATE SEPT 2013

REGISTERED PROFESSIONAL ENGINEER ANDREW D. WIESNER No. 75948 CIVIL STATE OF CALIFORNIA
9/16/2013

carollo

SAN LUIS OBISPO COUNTY

SAN LUIS OBISPO COUNTY
LOS OSOS WATER RECYCLING FACILITY PROJECT
CIVIL
PROFILES E, F, H

VERIFY SCALES
BAR IS ONE INCH ON ORIGINAL DRAWING
0 1"
IF NOT ONE INCH ON THIS SHEET, ADJUST SCALES ACCORDINGLY

JOB NO. 8930A.11
DRAWING NO. 01C23
SHEET NO. OF 549

PROJECT NO. 8930A.11 FILE NAME: 8930A1101C23.dgn

Plot Date: 17-SEP-2013 10:05:19 AM User: DDonk Model: Layout1 ColorTable: gshade.ctb DesignScript: Carollo_Std_Pen_v0905.pen PlotScale: 2:1 LAST SAVED BY: bhawes

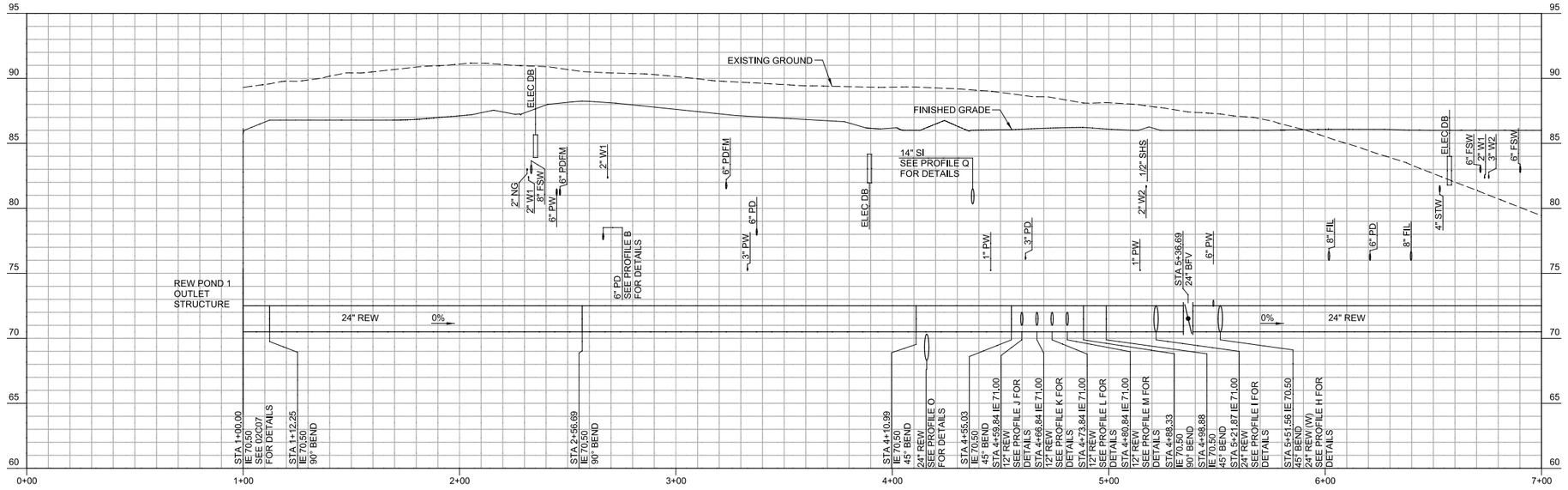

G PROFILE-24" REW

01C08
01C09

HORIZ SCALE: 1"=30'
VERT SCALE: 1"=5'
FILE: 8930A11-01-C-0111

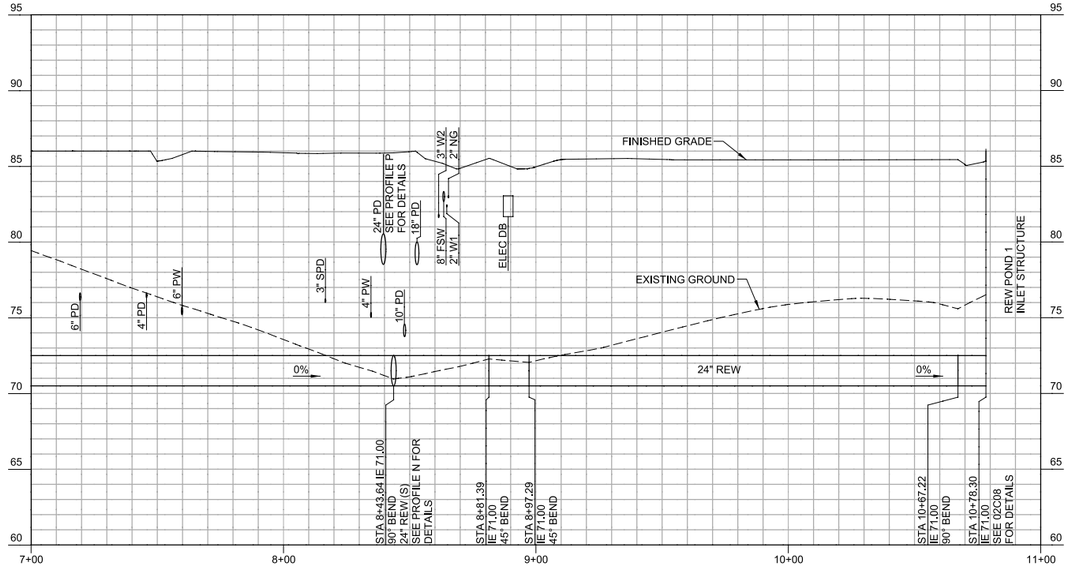

G PROFILE-24" REW

01C08
01C09

HORIZ SCALE: 1"=30'
VERT SCALE: 1"=5'
FILE: 8930A11-01-C-0111

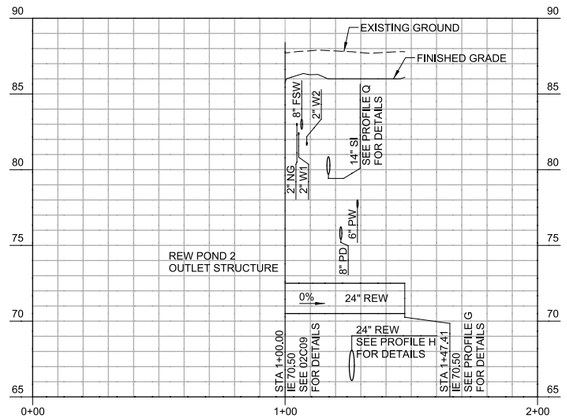

I PROFILE-24" REW

01C08

HORIZ SCALE: 1"=30'
VERT SCALE: 1"=5'
FILE: 8930A11-01-C-0111

REV	DATE	BY	DESCRIPTION

DESIGNED LJE
DRAWN GAT
CHECKED RLG
DATE SEPT 2013

REGISTERED PROFESSIONAL ENGINEER ANDREW D. WIESNER No. 75948 CIVIL STATE OF CALIFORNIA
9/16/2013

carollo

SAN LUIS OBISPO COUNTY

SAN LUIS OBISPO COUNTY
LOS OSOS WATER RECYCLING FACILITY PROJECT
CIVIL
PROFILES G, I

VERIFY SCALES
BAR IS ONE INCH ON ORIGINAL DRAWING
0 1"
IF NOT ONE INCH ON THIS SHEET, ADJUST SCALES ACCORDINGLY

JOB NO. 8930A.11
DRAWING NO. 01C24
SHEET NO. OF 549

PROJECT NO. 8930A.11 FILE NAME: 8930A1101C24.dgn

Plot Date: 17-SEP-2013 10:05:34 AM User: DDonk Model: Layout1 ColorTable: gshade.ctb DesignScript: Carollo_Std_Pen_v0905.pen PlotScale: 2:1 LAST SAVED BY: bhawes

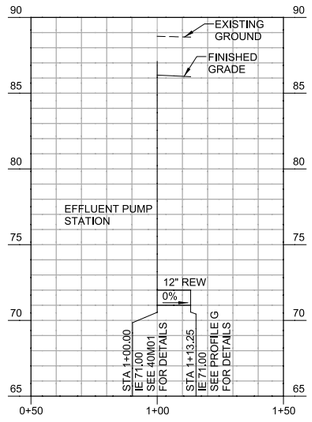

J 01C08 **PROFILE-12" REW**

HORIZ SCALE: 1"=30'
VERT SCALE: 1"=5'
FILE: 8930A11-01-C-0111

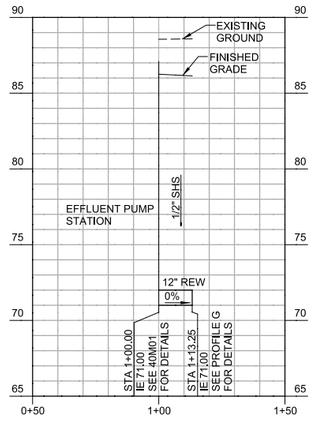

K 01C08 **PROFILE-12" REW**

HORIZ SCALE: 1"=30'
VERT SCALE: 1"=5'
FILE: 8930A11-01-C-0111

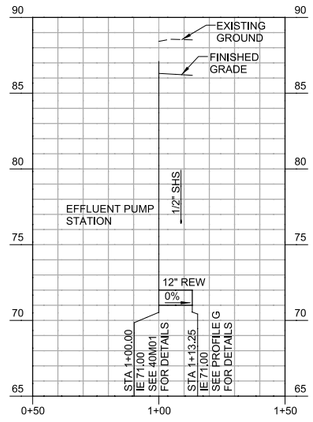

L 01C08 **PROFILE-12" REW**

HORIZ SCALE: 1"=30'
VERT SCALE: 1"=5'
FILE: 8930A11-01-C-0111

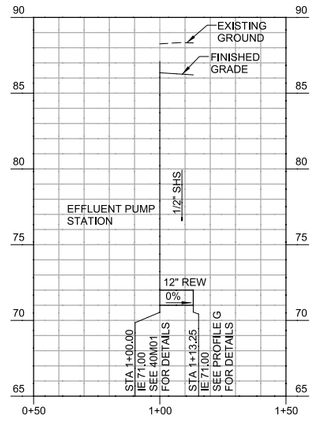

M 01C08 **PROFILE-12" REW**

HORIZ SCALE: 1"=30'
VERT SCALE: 1"=5'
FILE: 8930A11-01-C-0111

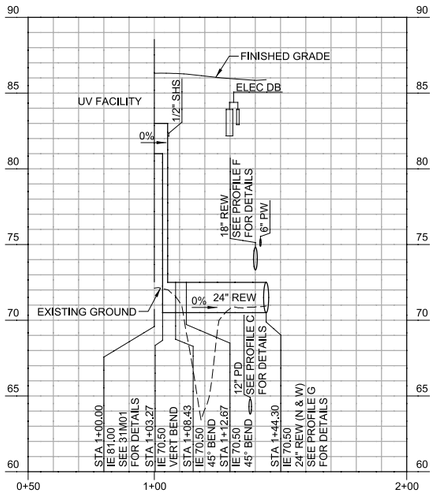

N 01C09 **PROFILE-24" REW**

HORIZ SCALE: 1"=30'
VERT SCALE: 1"=5'
FILE: 8930A11-01-C-0111

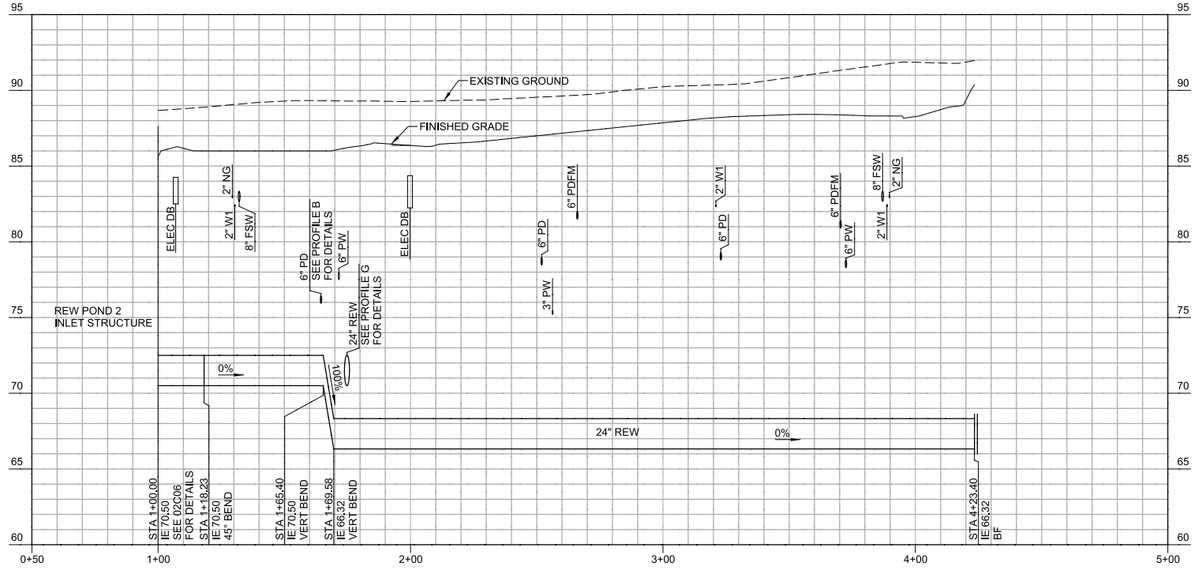

O 01C08 **PROFILE-24" REW**

HORIZ SCALE: 1"=30'
VERT SCALE: 1"=5'
FILE: 8930A11-01-C-0111

REV	DATE	BY	DESCRIPTION

DESIGNED LJE
DRAWN GAT
CHECKED RLG
DATE SEPT 2013

REGISTERED PROFESSIONAL ENGINEER — ANDREW D. WIENER — No. 75948 — CIVIL — STATE OF CALIFORNIA — 9/16/2013

carollo

SAN LUIS OBISPO COUNTY

SAN LUIS OBISPO COUNTY

LOS OSOS WATER RECYCLING FACILITY PROJECT

CIVIL

PROFILES J, K, L, M, N, O

VERIFY SCALES
BAR IS ONE INCH ON ORIGINAL DRAWING
0 1"
IF NOT ONE INCH ON THIS SHEET, ADJUST SCALES ACCORDINGLY

JOB NO. 8930A.11
DRAWING NO. 01C25
SHEET NO. OF 549

PROJECT NO. 8930A.11 FILE NAME: 8930A1101C25.dgn

Plot Date: 17-SEP-2013 10:05:47 AM User: DDonk Model: Layout1 ColorTable: gshade.ctb DesignScript: Carollo_Std_Pen_v0905.pen PlotScale: 2:1 LAST SAVED BY: bhawes

Plot Date: 17-SEP-2013 10:06:03 AM
User: DDonk
PlotScale: 2:1
DesignScript: Carollo_Std_Pen_v0905.pen
ColorTable: gshade.ctb
Model: Layout1
LAST SAVED BY: bhawes

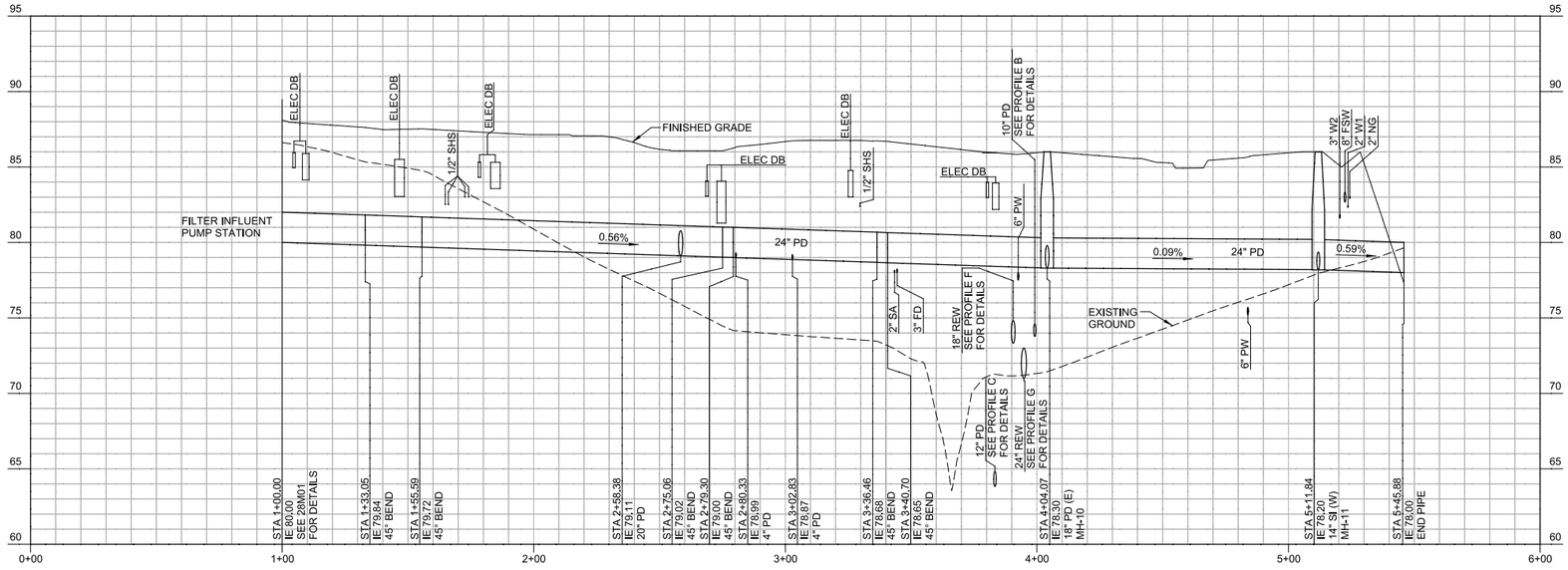

P PROFILE-24" PD

01C09

HORIZ SCALE: 1"=30'
VERT SCALE: 1"=5'
FILE: 8930A11-01-C-0111

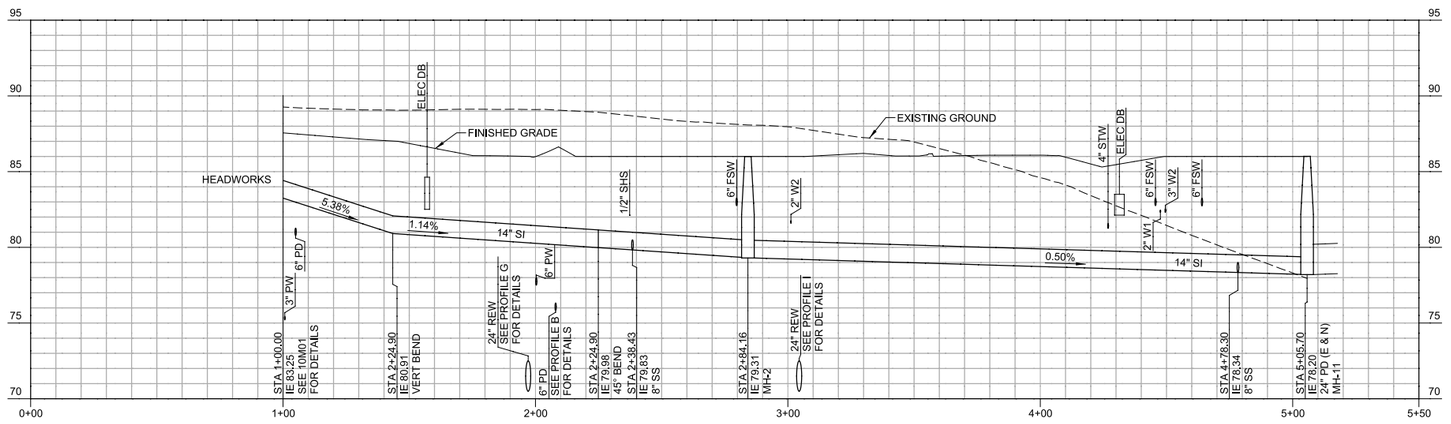

Q PROFILE-14" SI

01C08
01C09

HORIZ SCALE: 1"=30'
VERT SCALE: 1"=5'
FILE: 8930A11-01-C-0111

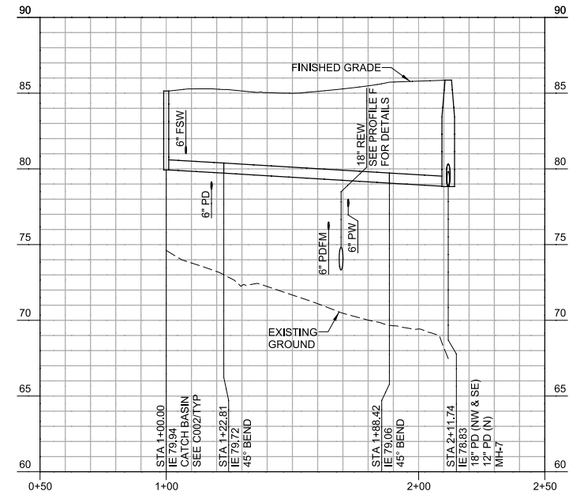

V PROFILE-8" PD

01C09

HORIZ SCALE: 1"=30'
VERT SCALE: 1"=5'
FILE: 8930A11-01-C-0111

REV	DATE	BY	DESCRIPTION

DESIGNED LJE
DRAWN GAT
CHECKED RLG
DATE SEPT 2013

REGISTERED PROFESSIONAL ENGINEER — ANDREW D. WIRTZFELD — No. 75948 — CIVIL — STATE OF CALIFORNIA — 9/16/2013

carollo

SAN LUIS OBISPO COUNTY

SAN LUIS OBISPO COUNTY
LOS OSOS WATER RECYCLING FACILITY PROJECT
CIVIL
PROFILES P, Q, V

VERIFY SCALES
BAR IS ONE INCH ON ORIGINAL DRAWING
0 1"
IF NOT ONE INCH ON THIS SHEET, ADJUST SCALES ACCORDINGLY

JOB NO. 8930A.11
DRAWING NO. 01C26
SHEET NO. OF 549

PROJECT NO. 8930A.11 FILE NAME: 8930A1101C26.dgn

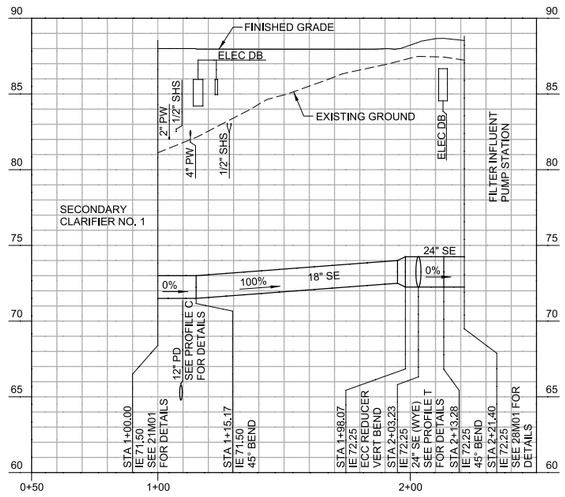

S 01C09 **PROFILE-18" TO 24" SE**
HORIZ SCALE: 1"=30'
VERT SCALE: 1"=5'
FILE: 8930A11-01-C-0111

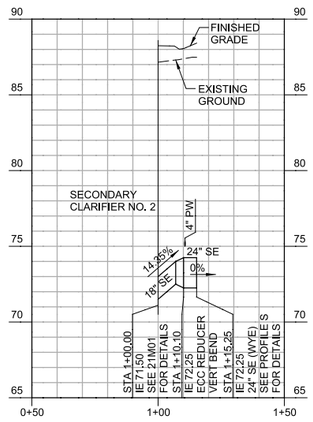

T 01C09 **PROFILE-18" TO 24" SE**
HORIZ SCALE: 1"=30'
VERT SCALE: 1"=5'
FILE: 8930A11-01-C-0111

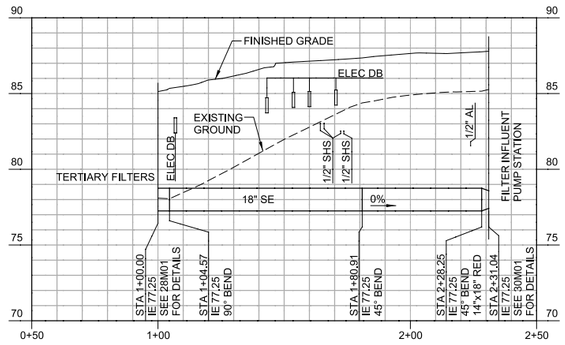

U 01C09 **PROFILE-18" SE**
HORIZ SCALE: 1"=30'
VERT SCALE: 1"=5'
FILE: 8930A11-01-C-0111

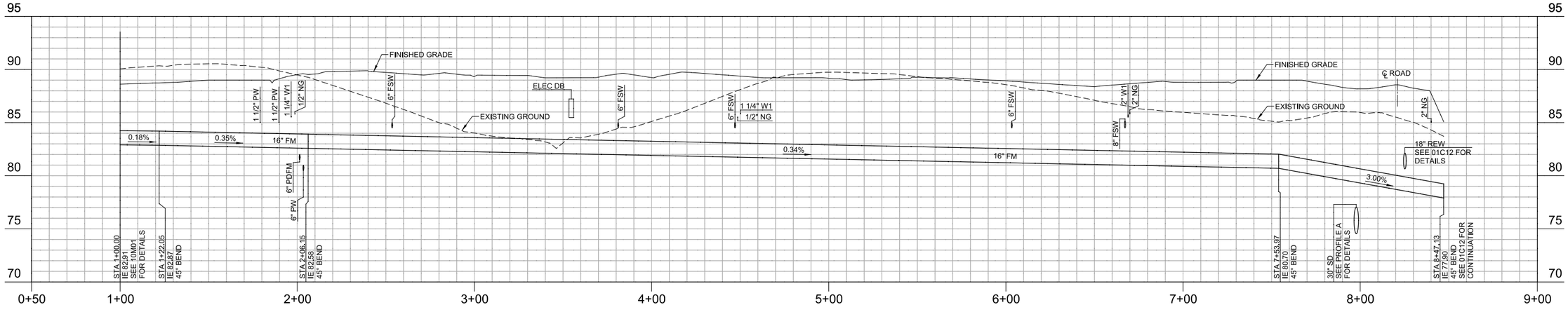

R 01C08 01C09 **PROFILE-16" FM**
HORIZ SCALE: 1"=30'
VERT SCALE: 1"=5'
FILE: 8930A11-01-C-0111

REV	DATE	BY	DESCRIPTION

DESIGNED LJE
DRAWN GAT
CHECKED RLG
DATE SEPT 2013

REGISTERED PROFESSIONAL ENGINEER ANDREW D. WIENER No. 75948 CIVIL STATE OF CALIFORNIA 9/16/2013

carollo

SAN LUIS OBISPO COUNTY

SAN LUIS OBISPO COUNTY
LOS OSOS WATER RECYCLING FACILITY PROJECT
CIVIL
PROFILES R, S, T, U

VERIFY SCALES
BAR IS ONE INCH ON ORIGINAL DRAWING
0 1"
IF NOT ONE INCH ON THIS SHEET, ADJUST SCALES ACCORDINGLY

JOB NO. 8930A.11
DRAWING NO. 01C27
SHEET NO. OF 549

PROJECT NO. 8930A.11 FILE NAME: 8930A1101C27.dgn

Plot Date: 17-SEP-2013 10:06:17 AM
User: DDonk
PlotScale: 2:1
DesignScript: Carollo_Std_Pen_v0905.pen
ColorTable: gshade.ctb
Model: Layout1
LAST SAVED BY: bhawes

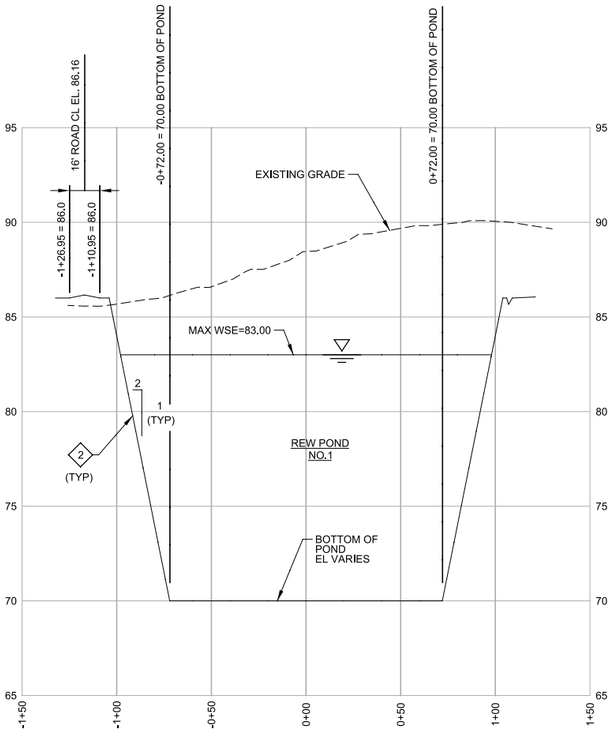

1 01C04 **SECTION**
SCALE: V: 1"=4', H: 1"=40'
FILE: 8930A11-01-C-0303

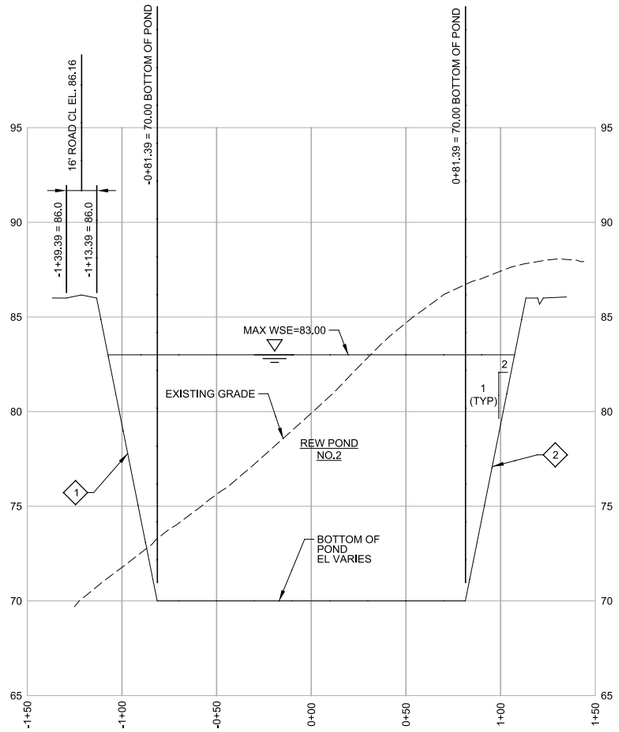

2 01C02 01C04 **SECTION**
SCALE: V: 1"=4', H: 1"=40'
FILE: 8930A11-01-C-0303

GENERAL NOTES

1. SEE 00C01 FOR GENERAL CIVIL NOTES
2. REMOVE EXISTING SOIL TO A DEPTH OF 3 FEET BELOW EXISTING SITE GRADES THROUGHOUT THE ENTIRE PLANT SITE

KEY NOTES

1. PREPARE POND SIDE SLOPE ON FILL PER DETAIL 13/02C04 AND 6/02C03.
2. PREPARE POND SIDE SLOPE ON CUT PER DETAIL 6/02C03.

REV	DATE	BY	DESCRIPTION

DESIGNED GAT
DRAWN BWH
CHECKED RLG
DATE SEPT 2013

REGISTERED PROFESSIONAL ENGINEER — BRIAN GIL KARIG — No. 62686 — CIVIL — STATE OF CALIFORNIA — 9/16/2013

carollo

SAN LUIS OBISPO COUNTY

SAN LUIS OBISPO COUNTY
LOS OSOS WATER RECYCLING FACILITY PROJECT
CIVIL
REW POND SECTIONS

VERIFY SCALES
BAR IS ONE INCH ON ORIGINAL DRAWING
0 1"
IF NOT ONE INCH ON THIS SHEET, ADJUST SCALES ACCORDINGLY

JOB NO. 8930A.11
DRAWING NO. 02C01
SHEET NO. OF 549

PROJECT NO. 8930A.11 FILE NAME: 8930A1102C01.dgn

Plot Date: 17-SEP-2013 10:06:33 AM
User: DDonk
PlotScale: 2:1
DesignScript: Carollo_Std_Pen_v0905.pen
ColorTable: gshade.ctb
Model: Layout1
LAST SAVED BY: ddonk

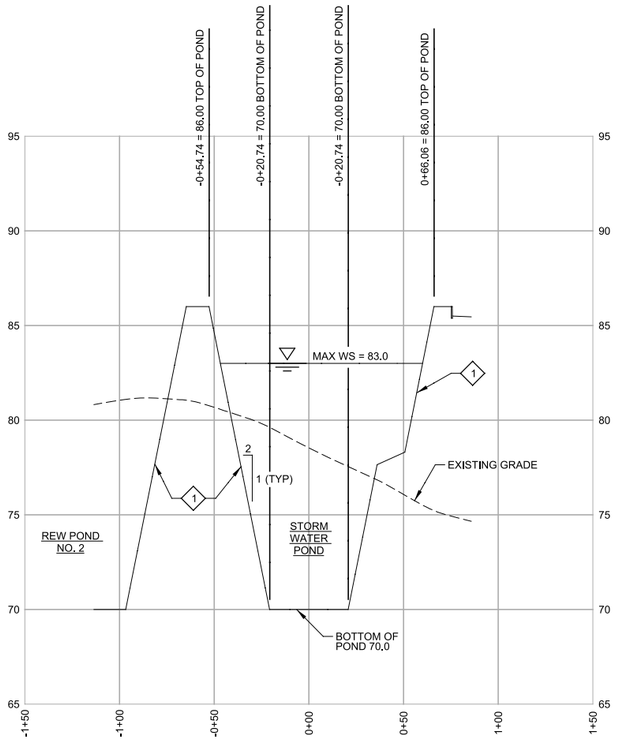

3 SECTION (01C03, 01C05)
SCALE: V: 1"=4', H: 1"=40'
FILE: 8930A11-01-C-0303

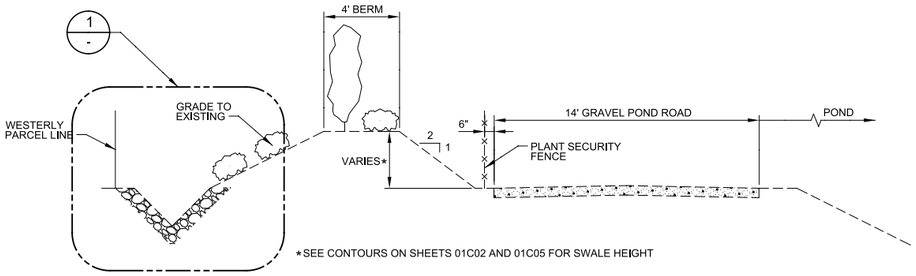

A SECTION (01C04)
SCALE: 1/4" = 1'-0"
FILE: 8930A11-01-C-0304

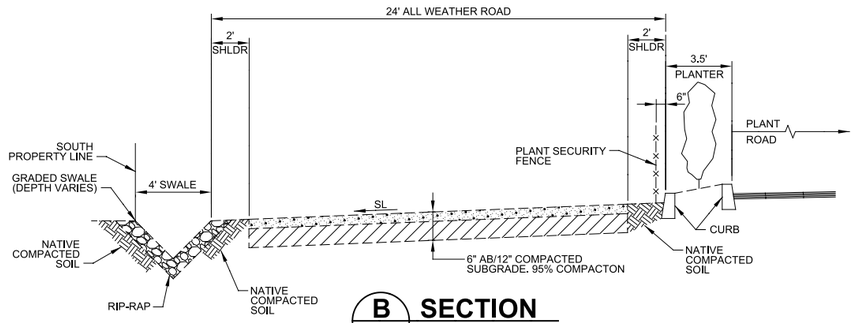

B SECTION (01C05)
SCALE: 1/4" = 1'-0"
FILE: 8930A11-01-C-0304

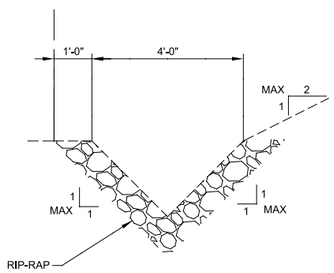

1 DETAIL (-)
SCALE: 1/2" = 1'-0"
FILE: 8930A11-01-C-0304

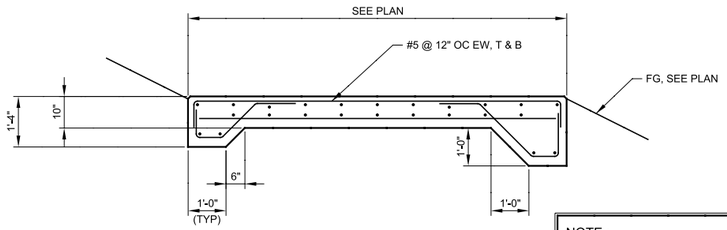

NOTE :
FOR SUBGRADE PREPARATION SEE D 00G11

C SECTION (01C01, 01C04, 01C05)
SCALE: 1/2" = 1'-0"
FILE: 8930A1102S350

GENERAL NOTES

1. SEE 00C01 FOR GENERAL CIVIL NOTES.

KEY NOTES

1 PREPARE POND SIDE SLOPE PER DETAIL 13/02C04 AND 6/02C03.

REV	DATE	BY	DESCRIPTION

DESIGNED GAT
DRAWN BWH
CHECKED RLG
DATE SEPT 2013

REGISTERED PROFESSIONAL ENGINEER BRIAN GIL KAMMER No. 62686 CIVIL STATE OF CALIFORNIA 9/16/2013

carollo

SAN LUIS OBISPO COUNTY

SAN LUIS OBISPO COUNTY
LOS OSOS WATER RECYCLING FACILITY PROJECT
CIVIL
STORM WATER POND AND MISCELLANEOUS SECTIONS

VERIFY SCALES
BAR IS ONE INCH ON ORIGINAL DRAWING
0 1"
IF NOT ONE INCH ON THIS SHEET, ADJUST SCALES ACCORDINGLY

JOB NO. 8930A.11
DRAWING NO. 02C02
SHEET NO. OF 549

PROJECT NO. 8930A.11 FILE NAME: 8930A1102C02.dgn

Plot Date: 17-SEP-2013 10:06:43 AM
User: DDonk
PlotScale: 2:1
DesignScript: Carollo_Std_Pen_v0905.pen
ColorTable: gshade.ctb
Model: Layout1
LAST SAVED BY: ddonk

Plot Date: 17-SEP-2013 10:06:57 AM
User: DDonk
PlotScale: 2:1
DesignScript: Carollo_Std_Pen_v0905.pen
ColorTable: gshade.ctb
Model: Layout1
LAST SAVED BY: rgriffith

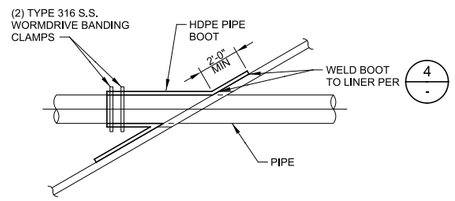

NOTES:
1. LEAVE SLACK IN BOOT LINER PER SPECIFICATIONS.

1 PIPE PENETRATION WITH BOOT DETAIL

01C09

SCALE: NONE
FILE: 8930A11-02-C-0301

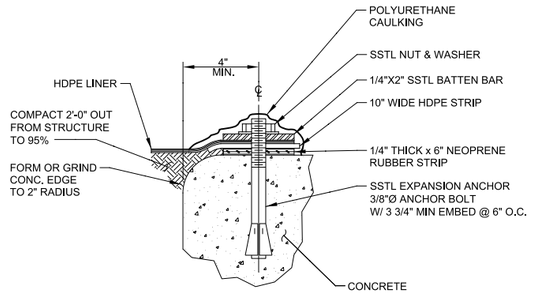

2 BATTEN ATTACHMENT DETAIL

02C04
02C06
02C07
02C08
02C09

SCALE: NONE
FILE: 8930A11-02-C-0302

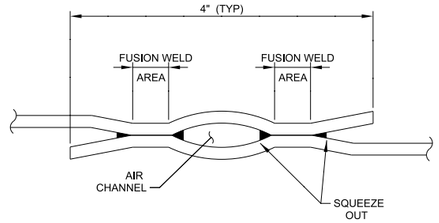

3 HDPE DOUBLE WEDGE SEAM TYPE-I DETAIL

-

SCALE: NONE
FILE: 8930A11-02-C-0303

GENERAL NOTES

1. FOR GENERAL STRUCTURAL NOTES AND EARTHWORK DETAILS SEE DRAWINGS 00G10 & 00G11.

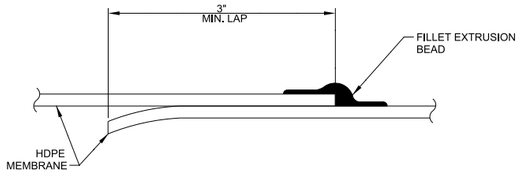

4 HDPE FILLET EXTRUSION SEAM TYPE-II DETAIL

-

SCALE: NONE
FILE: 8930A11-02-C-0304

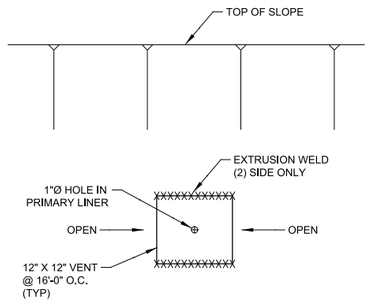

5 SLOPE VENT DETAIL

-

SCALE: NONE
FILE: 8930A11-02-C-0305

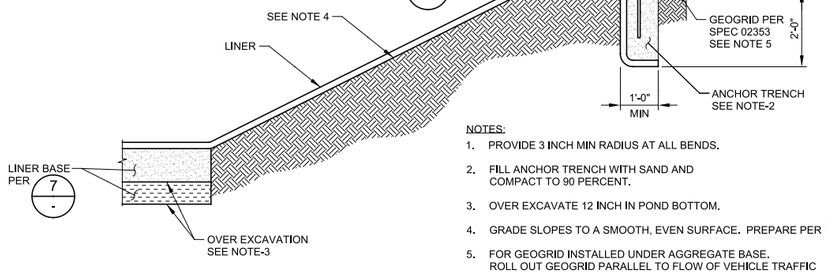

NOTES:
1. PROVIDE 3 INCH MIN RADIUS AT ALL BENDS.
2. FILL ANCHOR TRENCH WITH SAND AND COMPACT TO 90 PERCENT.
3. OVER EXCAVATE 12 INCH IN POND BOTTOM.
4. GRADE SLOPES TO A SMOOTH, EVEN SURFACE. PREPARE PER 13 / 02C04
5. FOR GEOGRID INSTALLED UNDER AGGREGATE BASE. ROLL OUT GEOGRID PARALLEL TO FLOW OF VEHICLE TRAFFIC

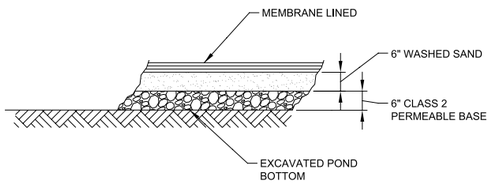

7 LINER BASE MATERIAL

01C02
01C03
01C04

SCALE: NONE
FILE: 8930A11-02-C-0307

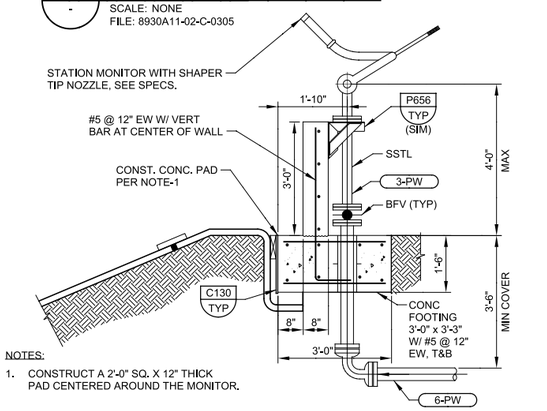

NOTES:
1. CONSTRUCT A 2'-0" SQ. X 12" THICK PAD CENTERED AROUND THE MONITOR.

8 WATER STATION MONITOR

01C06
01C07
01C08
01C09

SCALE: NONE
FILE: 8930A11-02-C-0308

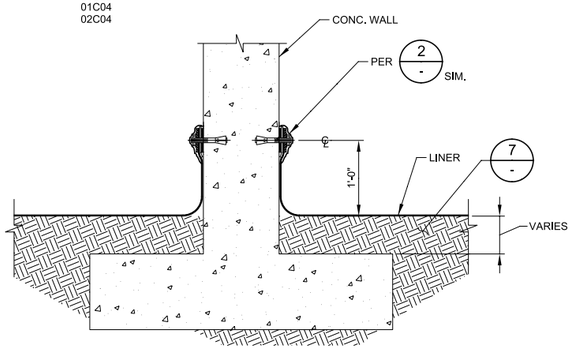

9 BATTEN ATTACHMENT DETAIL AT VERT. WALL

02C05

SCALE: NONE
FILE: 8930A11-02-C-0309

6 POND LINER SYSTEM AND ANCHOR TRENCH DETAIL

01C02
01C03
01C04
02C04

SCALE: NONE
FILE: 8930A11-02-C-0306

REV	DATE	BY	DESCRIPTION

DESIGNED DLM
DRAWN RR
CHECKED RLG
DATE SEPT 2013

REGISTERED PROFESSIONAL ENGINEER — MARK GIL KANCHANAPOOMI — No. 62686 — CIVIL — STATE OF CALIFORNIA — 9/16/2013

carollo

SAN LUIS OBISPO COUNTY

SAN LUIS OBISPO COUNTY
LOS OSOS WATER RECYCLING FACILITY PROJECT
CIVIL
REW AND STORM WATER POND DETAILS - I

VERIFY SCALES
BAR IS ONE INCH ON ORIGINAL DRAWING
0 1"
IF NOT ONE INCH ON THIS SHEET, ADJUST SCALES ACCORDINGLY

JOB NO. 8930A.11
DRAWING NO. 02C03
SHEET NO. 1 OF 549

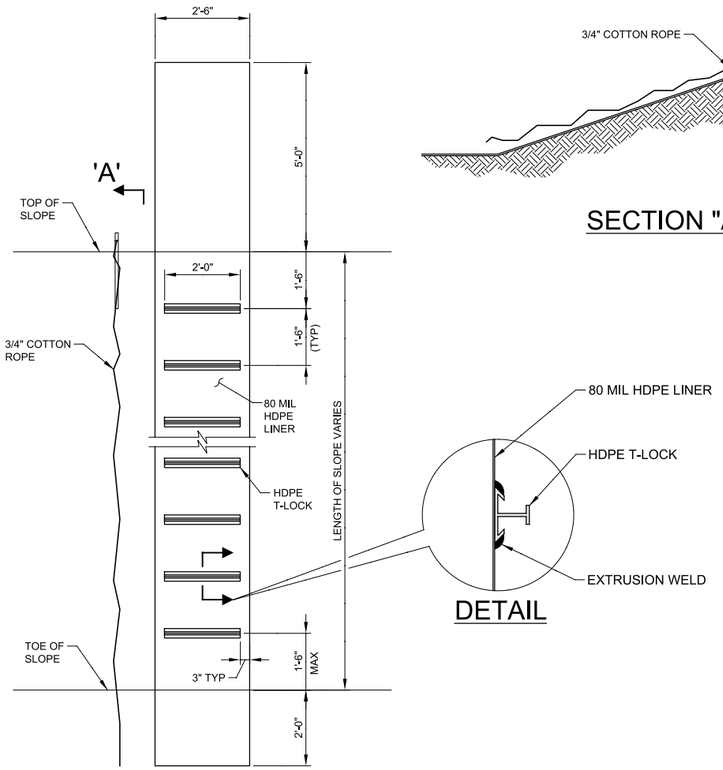

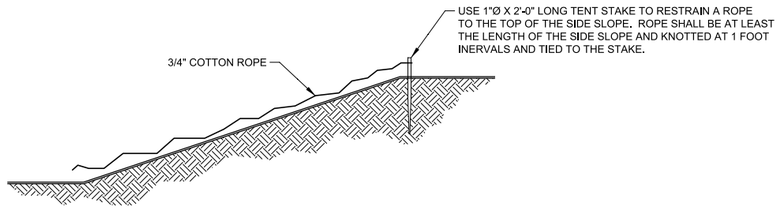

10 WALK-OUT PROVISION

01C02 / 01C03

SCALE: NONE
FILE: 8930A11-02-C-0410

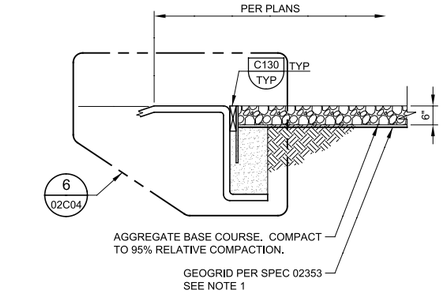

NOTES:

1. FOR GEOGRID INSTALLED UNDER AGGREGATE BASE, ROLL OUT GEOGRID PARALLEL TO FLOW OF VEHICLE TRAFFIC
2. FOR GEOGRID INSTALLED ON BERM SLOPES ANCHOR ONE END OF GEOGRID ROLL AS SHOWN
3. FILL ANCHOR TRENCH WITH SAND AND COMPACT TO 90%
4. EXTEND GEOGRID FROM ANCHOR TRENCH TO TOE OF SLOPE
5. PROVIDE 3 INCH MIN RADIUS AT ALL BENDS

11 TYPICAL EMBANKMENT SECTION

SCALE: NONE
FILE: 8930A11-02-C-0411

GENERAL NOTES

1. FOR GENERAL STRUCTURAL NOTES AND EARTHWORK DETAILS SEE DRAWINGS 00G10 & 00G11.

.

KEY NOTES

1. EL VARIES.
2. REMOVE AND OFF-HAUL EXISTING SOIL TO A MINIMUM DEPTH OF 3 FEET BELOW EXISTING SITE GRADE THROUGHOUT THE ENTIRE PLANT SITE.
3. SUBGRADE IS CLAY AND SENSITIVE TO CHANGES IN MOISTURE. SCARIFY SOIL TO DEPTH OF 9 INCHES AND COMPACT TO 90% RELATIVE COMPACTION.
4. PLACE FILL BEYOND THE FINISHED GRADE OF THE BERM AND THEN CUT BACK TO REVEAL COMPACTED SOIL AT THE SLOPE FACE.
5. PARTICULAR CARE SHOULD BE TAKEN DURING FILL PLACEMENT THAT THE LIMITS OF EXCAVATION AND COMPACTED FILL EXTEND BEYOND THE CATCH POINT.

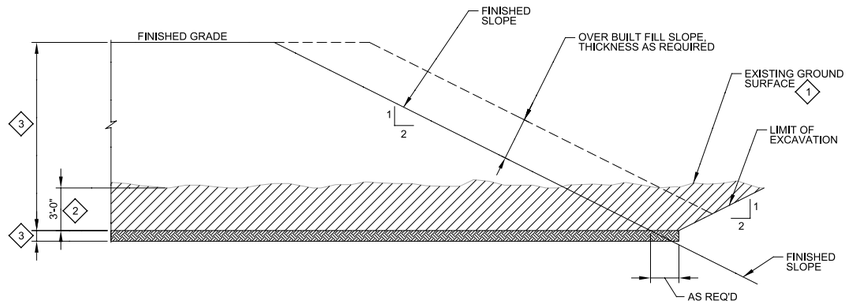

13 POND SIDE SLOPE GRADING

SCALE: NONE
FILE: 8930A11-02-C-0413

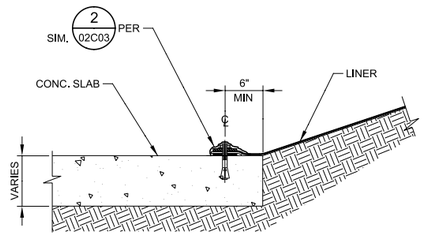

12 BATTEN ATTACHMENT DETAIL TO SLAB AT TOE OF SLOPE

SCALE: NONE
FILE: 8930A11-02-C-0412

REV	DATE	BY	DESCRIPTION

DESIGNED GAT
DRAWN RR
CHECKED RLG
DATE SEPT 2013

REGISTERED PROFESSIONAL ENGINEER — RYAN GIL KASTNER — No. 62686 — CIVIL — STATE OF CALIFORNIA — 9/16/2013

carollo

SAN LUIS OBISPO COUNTY

SAN LUIS OBISPO COUNTY
LOS OSOS WATER RECYCLING FACILITY PROJECT
CIVIL
REW AND STORM WATER POND DETAILS - II

VERIFY SCALES
BAR IS ONE INCH ON ORIGINAL DRAWING
0 1"
IF NOT ONE INCH ON THIS SHEET, ADJUST SCALES ACCORDINGLY

JOB NO. 8930A.11
DRAWING NO. 02C04
SHEET NO. 2 OF 549

PROJECT NO. 8930A.11 FILE NAME: 8930A1102C04.dgn

Plot Date: 17-SEP-2013 10:07:16 AM
User: DDonk
PlotScale: 2:1
DesignScript: Carollo_Std_Pen_v0905.pen
ColorTable: gshade.ctb
Model: Layout1
LAST SAVED BY: ddonk

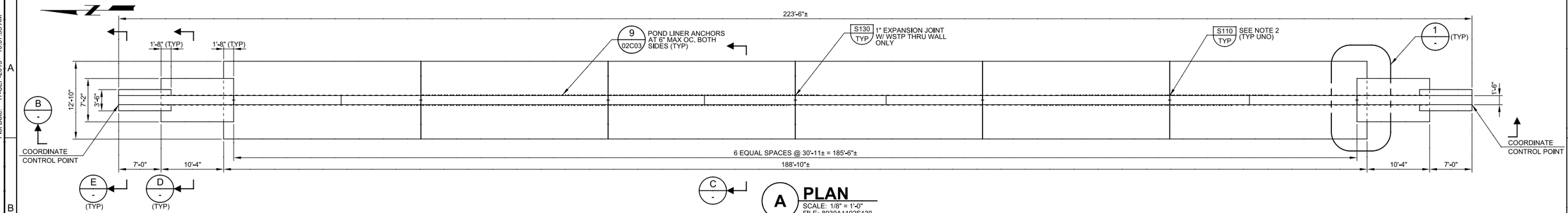

A PLAN
SCALE: 1/8" = 1'-0"
FILE: 8930A1102S130

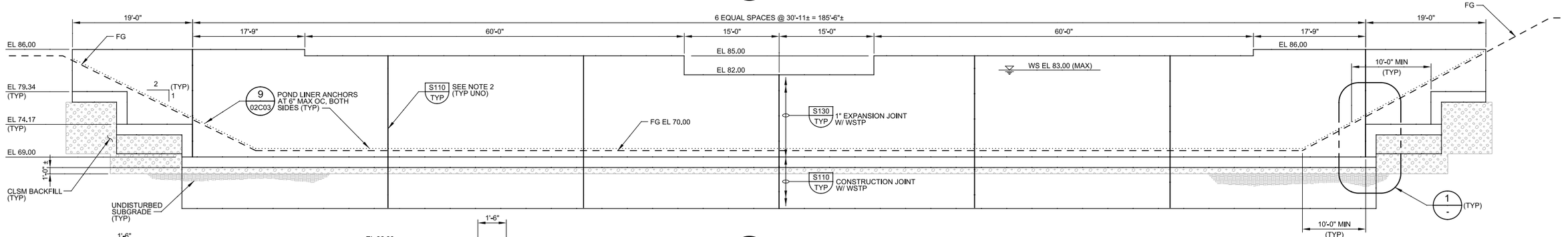

B SECTION
SCALE: 1/8" = 1'-0"
FILE: 8930A1102S330

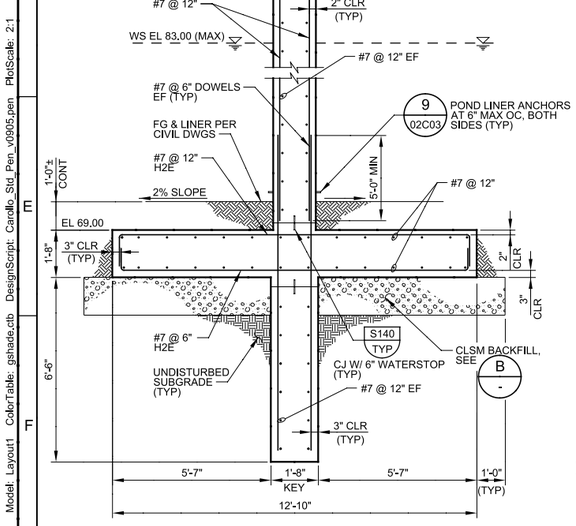

C SECTION
SCALE: 3/8" = 1'-0"
FILE: 8930A1102S333

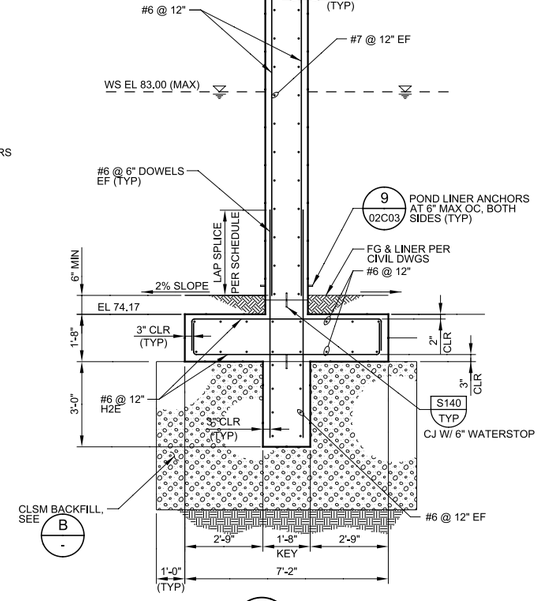

D SECTION
SCALE: 3/8" = 1'-0"
FILE: 8930A1102S331

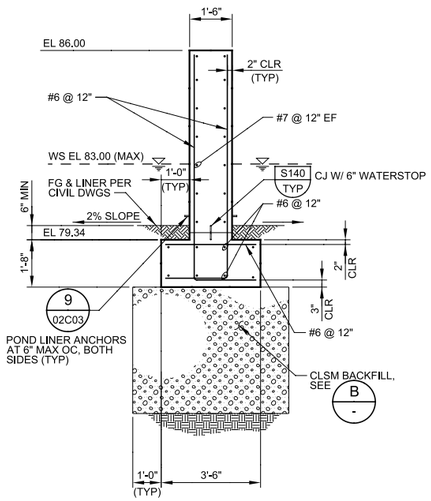

E SECTION
SCALE: 3/8" = 1'-0"
FILE: 8930A1102S332

GENERAL NOTES

1. FOR GENERAL STRUCTURAL NOTES SEE DRAWING 00G10.
2. WATERSTOP IS REQUIRED AT ALL CONSTRUCTION JOINTS WITHIN THE WALL AND KEY.

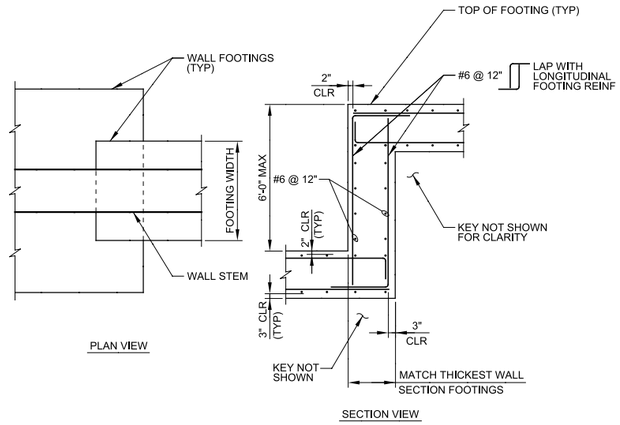

1 DETAIL
SCALE: NTS
FILE: 8930A1102S401

REV	DATE	BY	DESCRIPTION

DESIGNED LS
DRAWN PLN
CHECKED WWT
DATE SEPT 2013

REGISTERED PROFESSIONAL ENGINEER — JAMES A. LOPEZ — No. 4466 — STRUCTURAL — STATE OF CALIFORNIA — 9/16/2013

carollo

SAN LUIS OBISPO COUNTY

SAN LUIS OBISPO COUNTY
LOS OSOS WATER RECYCLING FACILITY PROJECT
CIVIL
REW POND STRUCTURES
DIVIDER WALL - PLAN, SECTIONS & DETAIL

VERIFY SCALES
BAR IS ONE INCH ON ORIGINAL DRAWING
0 1"
IF NOT ONE INCH ON THIS SHEET, ADJUST SCALES ACCORDINGLY

JOB NO. 8930A.11
DRAWING NO. 02C05
SHEET NO. OF 549

PROJECT NO. 8930A.11 FILE NAME: 8930A1102C05.dgn

Plot Date: 17-SEP-2013 10:07:35 AM
User: DDonk
PlotScale: 2:1
DesignScript: Carollo_Std_Pen_v0905.pen
ColorTable: gshade.ctb
Model: Layout1
LAST SAVED BY: ddonk

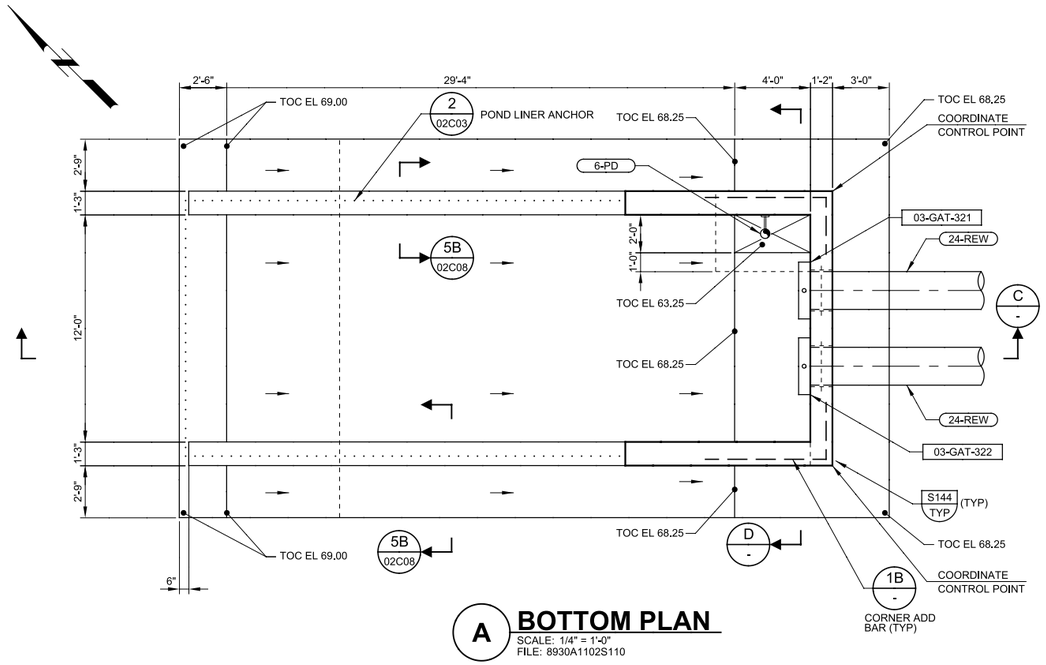

A BOTTOM PLAN

SCALE: 1/4" = 1'-0"
FILE: 8930A1102S110

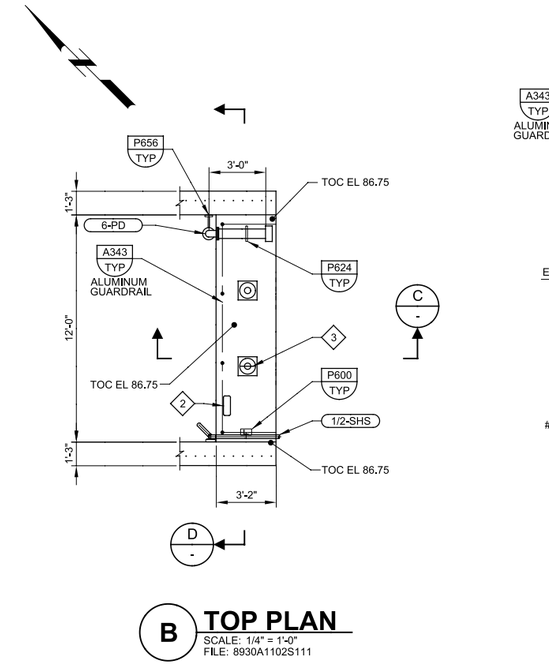

B TOP PLAN

SCALE: 1/4" = 1'-0"
FILE: 8930A1102S111

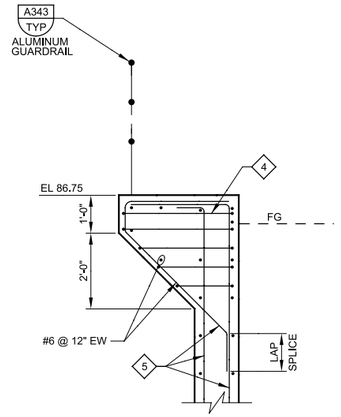

1 DETAIL

SCALE: 1/2" = 1'-0"
FILE: 8930A1102S310

02C07
02C08
02C09

GENERAL NOTES

1. FOR GENERAL NOTES AND EARTHWORK DETAILS SEE DRAWINGS 00G10 & 00G11.
2. FOR COORDINATE CONTROL DATA AND CURVE DATA, SEE DWG 01C20.

KEY NOTES

1. HORIZONTAL PAINT MARKINGS AND ELEVATION VALUES AT 1-FOOT INCREMENTS, BEGIN AT EL 70.0.
2. LOCATION OF LIFE PRESERVER KIT.
3. INSTALL MANUAL HAND CRANK OPERATION FOR [03-GAT-322] BUT PROVIDE CAPABILITY FOR FUTURE MOTORIZED UNIT.
4. #4 TIES AT 6" SPACING SIM TO S182/TYP.
5. ADD 3-#6 AT 3" SPACING EACH SIDE OF STEM OPENING SIM TO S182/TYP.

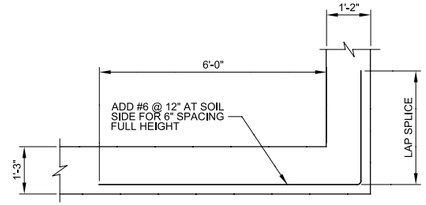

1B DETAIL

SCALE: 1/2" = 1'-0"
FILE: 8930A1102S402

02C07
02C08
02C09

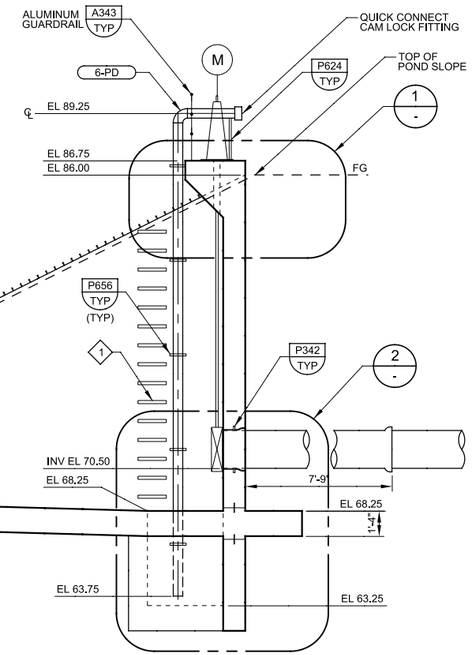

C SECTION

SCALE: 1/4" = 1'-0"
FILE: 8930A1102S310

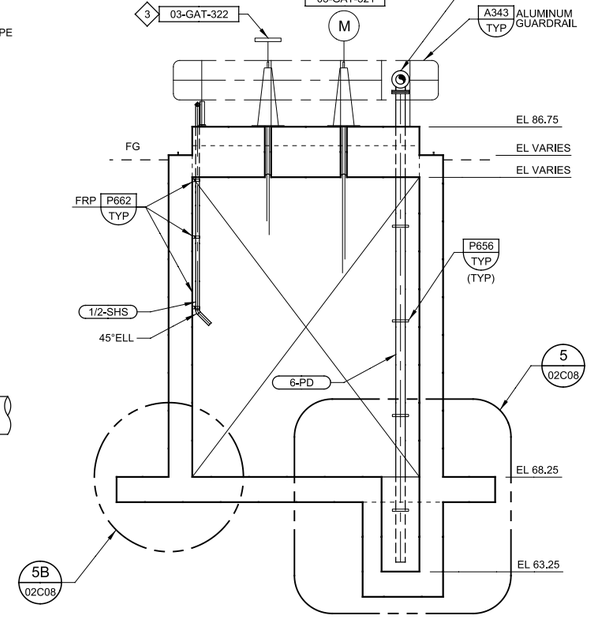

D SECTION

SCALE: 1/4" = 1'-0"
FILE: 8930A1102S311

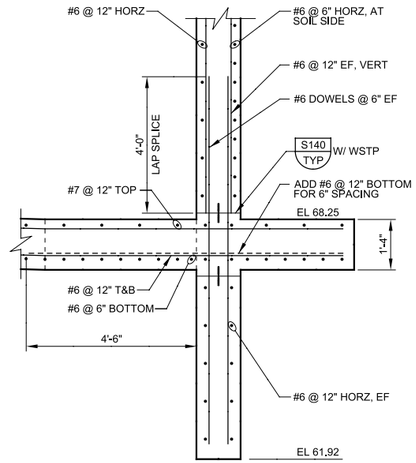

2 DETAIL

SCALE: 1/2" = 1'-0"
FILE: 8930A1102S310

02C08

REV	DATE	BY	DESCRIPTION

DESIGNED CC
DRAWN PLN
CHECKED WWT
DATE SEPT 2013

REGISTERED PROFESSIONAL ENGINEER HIPOM CHA No. 70357 CIVIL STATE OF CALIFORNIA 9/16/2013

carollo

SAN LUIS OBISPO COUNTY

SAN LUIS OBISPO COUNTY
LOS OSOS WATER RECYCLING FACILITY PROJECT
CIVIL
REW POND STRUCTURES
POND 1 INLET STRUCTURE - PLANS, SECTIONS & DETAILS

VERIFY SCALES
BAR IS ONE INCH ON ORIGINAL DRAWING
0 1"
IF NOT ONE INCH ON THIS SHEET, ADJUST SCALES ACCORDINGLY

JOB NO. 8930A.11
DRAWING NO. 02C06
SHEET NO. OF 549

PROJECT NO. 8930A.11 FILE NAME: 8930A1102C06.dgn

Plot Date: 17-SEP-2013 10:07:59 AM
User: DDonk
PlotScale: 2:1
DesignScript: Carollo_Std_Pen_v0905.pen
ColorTable: gshade.ctb
Model: Layout1
LAST SAVED BY: ddonk

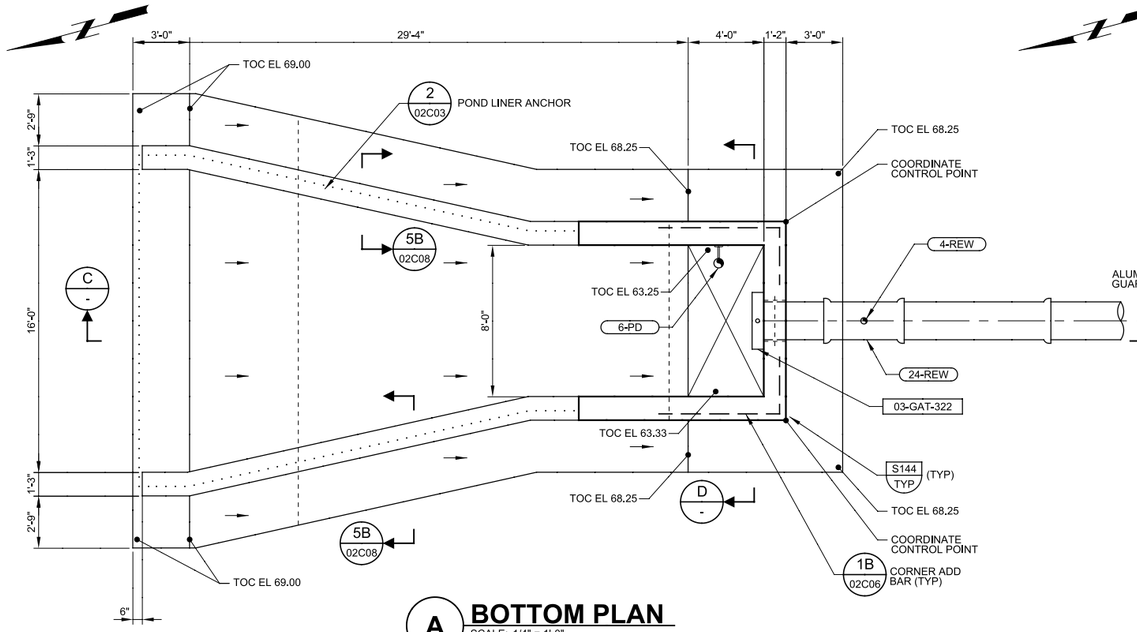

A BOTTOM PLAN

SCALE: 1/4" = 1'-0"
FILE: 8930A1102S120

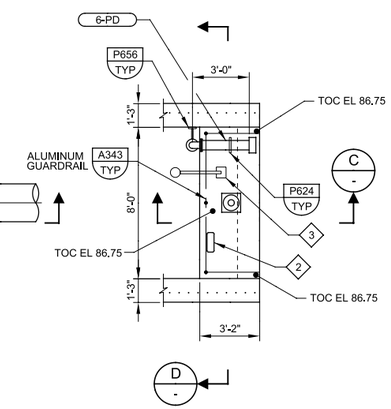

B TOP PLAN

SCALE: 1/4" = 1'-0"
FILE: 8930A1102S121

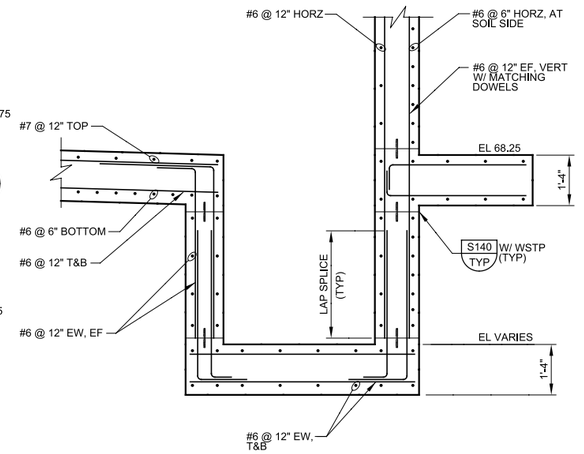

3 DETAIL

SCALE: 1/2" = 1'-0"
FILE: 8930A1102S320
02C09

GENERAL NOTES

1. FOR GENERAL NOTES AND EARTHWORK DETAILS SEE DRAWINGS 00G10 & 00G11.
2. FOR COORDINATE CONTROL DATA AND CURVE DATA, SEE DWG 01C20.

KEY NOTES

1. HORIZONTAL PAINT MARKINGS AND ELEVATION VALUES AT 1-FOOT INCREMENTS, BEGIN AT EL 70.0.
2. LOCATION OF LIFE PRESERVER KIT.
3. REW POND 1 LEVEL SENSOR 03-LE-326. MOUNT PER (NL180/TYP).

.

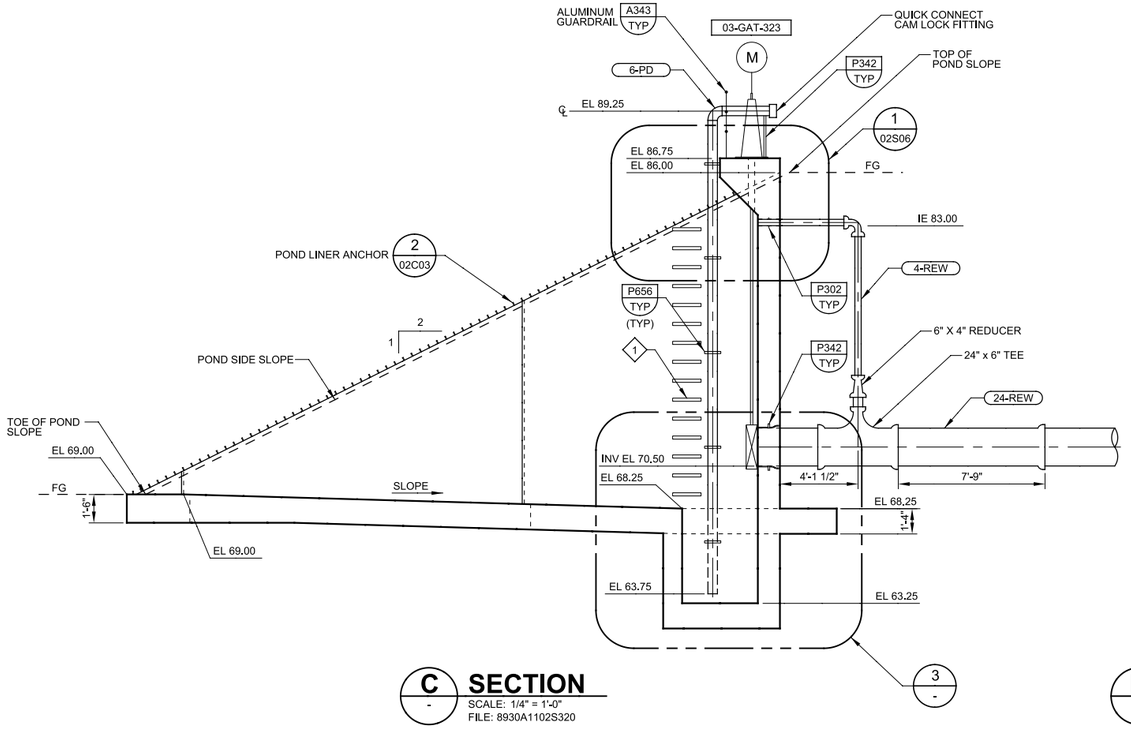

C SECTION

SCALE: 1/4" = 1'-0"
FILE: 8930A1102S320

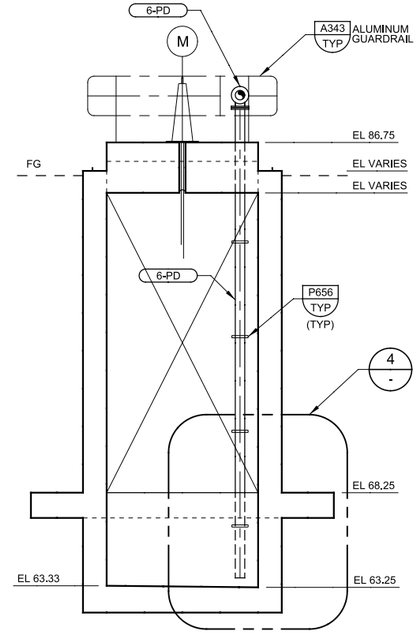

D SECTION

SCALE: 1/4" = 1'-0"
FILE: 8930A1102S321

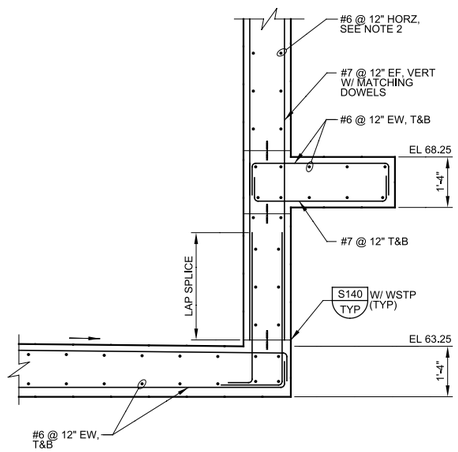

4 DETAIL

SCALE: 1/2" = 1'-0"
FILE: 8930A1102S321
02C09

REV	DATE	BY	DESCRIPTION

DESIGNED CC
DRAWN PLN
CHECKED WWT
DATE SEPT 2013

REGISTERED PROFESSIONAL ENGINEER — HIPOM CHO — No. 70357 — CIVIL — STATE OF CALIFORNIA
9/16/2013

carollo®

SAN LUIS OBISPO COUNTY

SAN LUIS OBISPO COUNTY
LOS OSOS WATER RECYCLING FACILITY PROJECT
CIVIL
REW POND STRUCTURES
POND 1 OUTLET STRUCTURE - PLANS, SECTIONS & DETAILS

VERIFY SCALES
BAR IS ONE INCH ON ORIGINAL DRAWING
0 1"
IF NOT ONE INCH ON THIS SHEET, ADJUST SCALES ACCORDINGLY

JOB NO. 8930A.11
DRAWING NO. 02C07
SHEET NO. OF 549

PROJECT NO. 8930A.11 FILE NAME: 8930A1102C07.dgn

Plot Date: 17-SEP-2013 10:08:17 AM
User: DDonk
PlotScale: 2:1
DesignScript: Carollo_Std_Pen_v0905.pen
ColorTable: gshade.ctb
Model: Layout1
LAST SAVED BY: ddonk

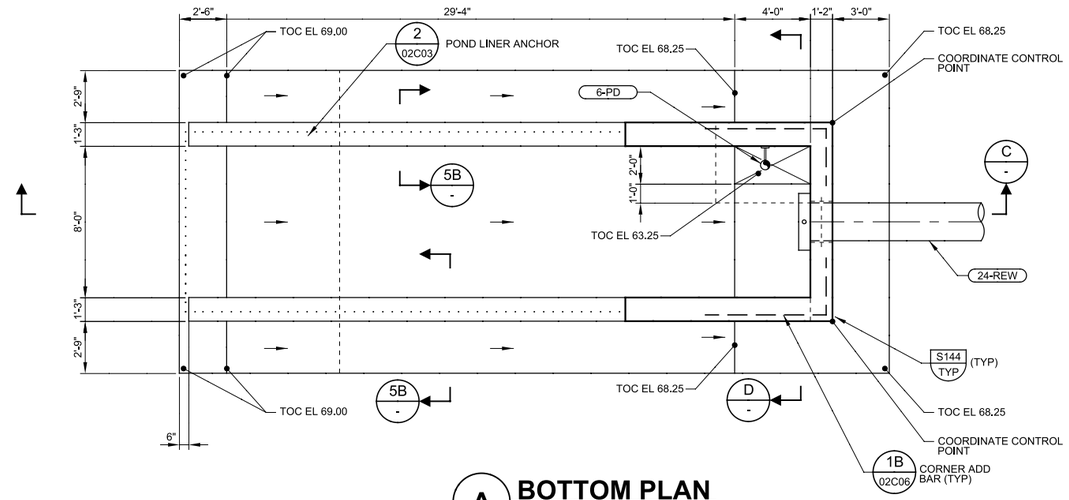

A BOTTOM PLAN

SCALE: 1/4" = 1'-0"
FILE: 8930A1102S110A

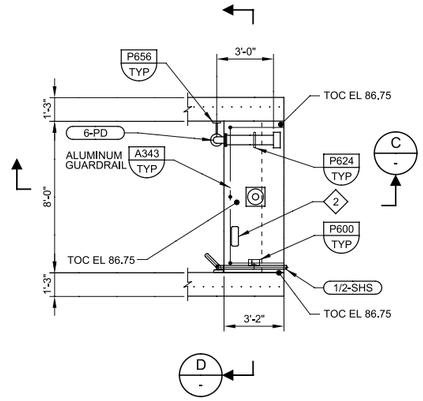

B TOP PLAN

SCALE: 1/4" = 1'-0"
FILE: 8930A1102S111A

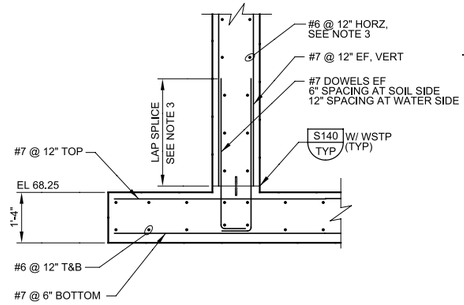

5B DETAIL

SCALE: 1/2" = 1'-0"
FILE: 8930A1102S311A

5B / - / 02C06
02C07
02C08

GENERAL NOTES

1. FOR GENERAL NOTES AND EARTHWORK DETAILS SEE DRAWINGS 00G10 & 00G11.
2. FOR COORDINATE CONTROL DATA AND CURVE DATA, SEE DWG 01C20.
3. HEIGHT OF ADD'L DOWELS ON SOIL SIDE SHALL BE 5'-6" ABOVE WALL JOINT.

KEY NOTES

1. HORIZONTAL PAINT MARKINGS AND ELEVATION VALUES AT 1-FOOT INCREMENTS, BEGIN AT EL 70.0.
2. LOCATION OF LIFE PRESERVER KIT.

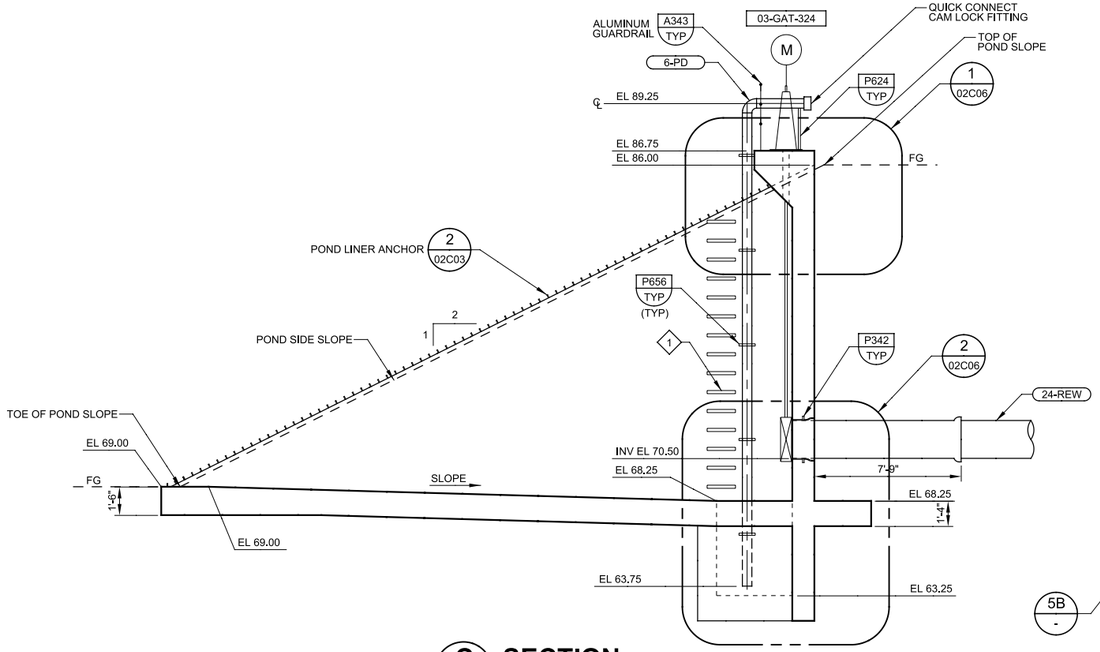

C SECTION

SCALE: 1/4" = 1'-0"
FILE: 8930A1102S310A

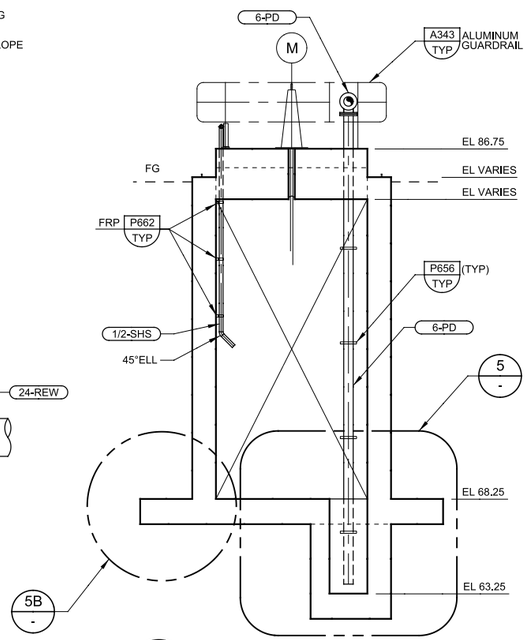

D SECTION

SCALE: 1/4" = 1'-0"
FILE: 8930A1102S311A

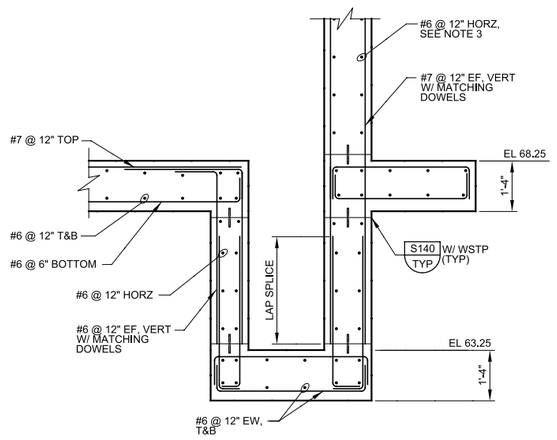

5 DETAIL

SCALE: 1/2" = 1'-0"
FILE: 8930A1102S311A

5 / - / 02C06

REV	DATE	BY	DESCRIPTION

DESIGNED CC
DRAWN PLN
CHECKED WWT
DATE SEPT 2013

REGISTERED PROFESSIONAL ENGINEER HIPOM CHA No. 70357 CIVIL STATE OF CALIFORNIA 9/16/2013

carollo

SAN LUIS OBISPO COUNTY

SAN LUIS OBISPO COUNTY
LOS OSOS WATER RECYCLING FACILITY PROJECT
CIVIL
REW POND STRUCTURES
POND 2 INLET STRUCTURE - PLANS, SECTIONS & DETAILS

VERIFY SCALES
BAR IS ONE INCH ON ORIGINAL DRAWING
0 1"
IF NOT ONE INCH ON THIS SHEET, ADJUST SCALES ACCORDINGLY

JOB NO. 8930A.11
DRAWING NO. 02C08
SHEET NO. OF 549

PROJECT NO. 8930A.11 FILE NAME: 8930A1102C08.dgn

Plot Date: 17-SEP-2013 10:08:33 AM
User: DDonk
PlotScale: 2:1
DesignScript: Carollo_Std_Pen_v0905.pen
ColorTable: gshade.ctb
Model: Layout1
LAST SAVED BY: ddonk

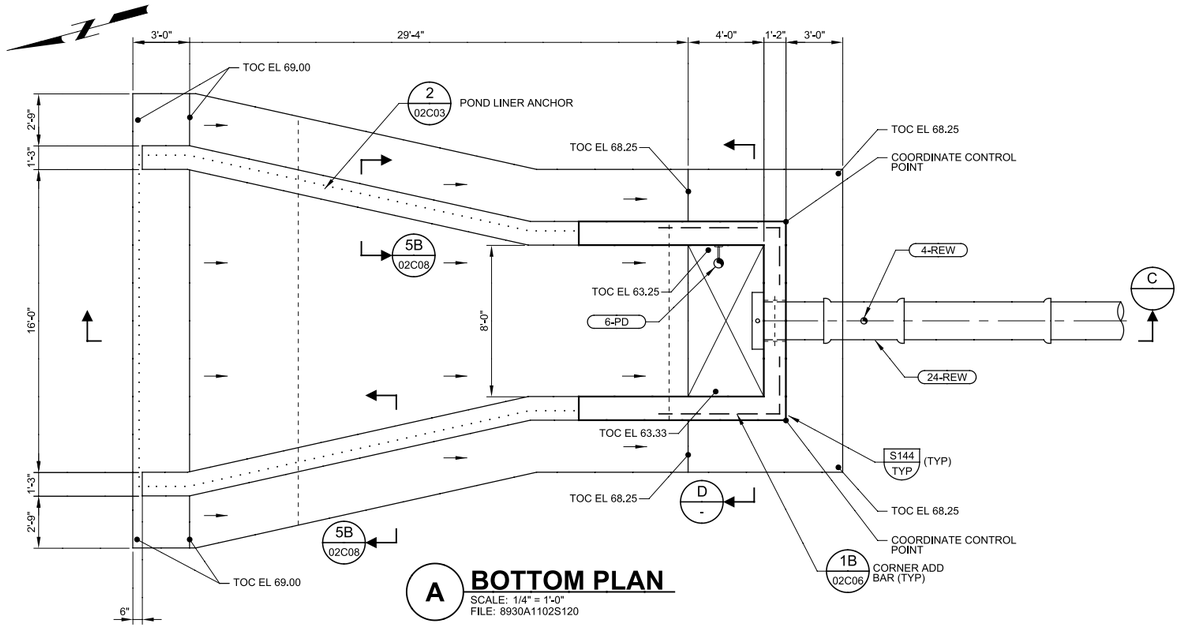

A BOTTOM PLAN

SCALE: 1/4" = 1'-0"
FILE: 8930A1102S120

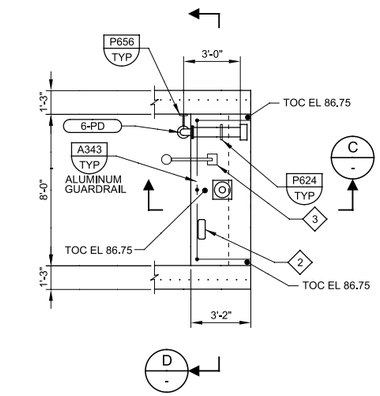

B TOP PLAN

SCALE: 1/4" = 1'-0"
FILE: 8930A1102S121

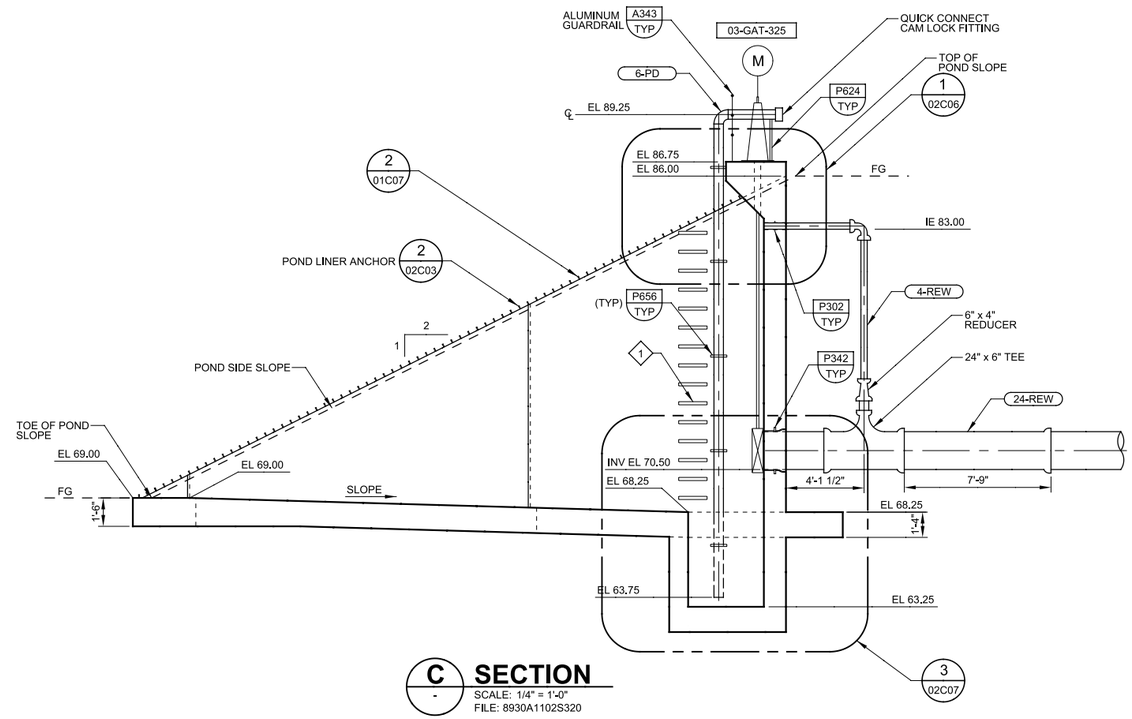

C SECTION

SCALE: 1/4" = 1'-0"
FILE: 8930A1102S320

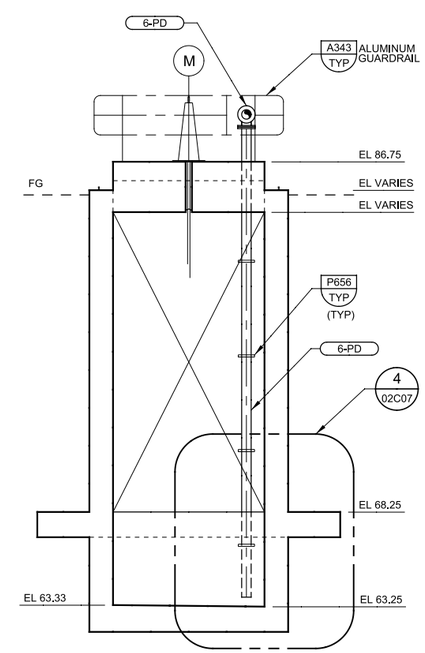

D SECTION

SCALE: 1/4" = 1'-0"
FILE: 8930A1102S321

GENERAL NOTES

1. FOR GENERAL NOTES AND EARTHWORK DETAILS SEE DRAWINGS 00G10 & 00G11.
2. FOR COORDINATE CONTROL DATA AND CURVE DATA, SEE DWG 01C20.

KEY NOTES

1. HORIZONTAL PAINT MARKINGS AND ELEVATION VALUES AT 1-FOOT INCREMENTS. BEGIN AT EL 70.0.
2. LOCATION OF LIFE PRESERVER KIT.
3. REW POND 1 LEVEL SENSOR 03-LE-326. MOUNT PER (NL180/TYP).

REV	DATE	BY	DESCRIPTION

DESIGNED CC
DRAWN PLN
CHECKED WWT
DATE SEPT 2013

REGISTERED PROFESSIONAL ENGINEER HIPOM CHE No. 70357 CIVIL STATE OF CALIFORNIA
9/16/2013

carollo

SAN LUIS OBISPO COUNTY

SAN LUIS OBISPO COUNTY
LOS OSOS WATER RECYCLING FACILITY PROJECT
CIVIL
REW POND STRUCTURES
POND 2 OUTLET STRUCTURE - PLANS & SECTIONS

VERIFY SCALES
BAR IS ONE INCH ON ORIGINAL DRAWING
0 1"
IF NOT ONE INCH ON THIS SHEET, ADJUST SCALES ACCORDINGLY

JOB NO. 8930A.11
DRAWING NO. 02C09
SHEET NO. OF 549

SPECIAL PROVISIONS - LOWRF WATER SUPPLY WELLS

1.0 Introduction

This technical specification applies to the construction and testing of two (2) construction water supply wells for the Los Osos Wastewater Recycling Facility (LOWRF). This specification does not, through omission, excuse the contractor from complying with any laws, rules and regulations, or standards governing the work being performed.

The wells are anticipated to tap sand and gravel aquifer zones of the Paso Robles Formation and marine sand aquifers of the Careaga Formation. Two test hole locations would be permitted and drilled. Final well designs or a decision to backfill the test hole will be determined within 24 hours following the completion of the geophysical logging. Well casing installation shall begin as soon as possible after the bore holes have been drilled to the total depth and to the final design diameter. The well designs are preliminary, for purposes of cost comparisons, and are subject to change.

2.0 Scope of Work

The work includes furnishing all labor, materials, transportation, tools, supplies, equipment, and appurtenances necessary for the complete and satisfactory construction, and testing, of the direct mud rotary drilled gravel envelope test wells herein specified. The locations for the two (2) wells are shown in Figure 1.

The preliminary design and testing parameters for the two construction water supply wells are shown below. Final pump design and well head details are not part of this specification. The preliminary design is shown in Figure 2.

Preliminary Well Design - LOWRF Supply Well

Drilling Location:	Township 30 South, Range 11 East, Section 16, Mount Diablo Base and Meridian, San Luis Obispo County.
Pilot hole depth:	220 feet
Geophysics:	Spontaneous potential (SP), long and short normal, single-point, gamma ray.
Well depth:	210 feet
Borehole size:	12-inch nominal diameter.
Completion:	Blank casing from wellhead to 100 feet depth. Slotted (high-density) casing from 100-200 feet depth. Blank casing from 200 to 210 feet depth with end cap.
Centralizers:	Every 40 feet in perforated interval and 60 feet in blank casing.
Blank casing:	6-inch nominal diameter, F480 SDR21 water well casing
Screen:	6-inch nominal diameter, F480 SDR21 water well casing with high-density 0.040-inch slots (perforations).
Gravel pack:	8 x 20 sand.
Sanitary Seal:	50 feet cement-based annular seal.
Wellhead:	Concrete well pad with a minimum thickness of 4 inches and two feet minimum lateral diameter from outside of well bore).
Air-lift Development:	8 hours.
Pump development:	16 hours.
Pumping Test:	4 hour step, 72 hour constant discharge test (assume 20 gpm).
Cuttings Pile:	Spread on-site in work area vicinity.
Drilling fluids:	Removed for disposal by contractor.
Produced water:	On-site discharge to land.
Water Quality Test:	General minerals, General physical, Inorganic (California Title 22 metals) suite.

3.0 Permits, Laws, and Standards

The contractor shall be responsible for obtaining a well application permit prior to drilling, and shall file a Well Completion Report at the conclusion of the project. The contractor shall comply with all federal, state, or local laws, ordinances, rules and regulations, and standards relating to the performance of work, including the California Water Well Standards (Dept. of Water Resources Bulletins 74-81 and 74-90), and San Luis Obispo County Code of Ordinances, Title 8, Chapter 8.4 (Construction, Repair, Modification and Destruction of Wells). Contractor shall also perform work in accordance with applicable methods in the American Water Works Association water well standards (ANSI/AWWA A100-90), unless waived by the project inspector or an alternate method is approved in writing by the project inspector.

4.0 Notify Underground Service Alert

The contractor shall notify Underground Service Alert at least two (2) working days prior to performing any excavation or drilling. No excavation or drilling shall begin unless the contractor has obtained a valid Underground Services Alert ticket.

5.0 Site Access/Make-up Water

Any improvements necessary for access shall be identified by the Contractor during the initial site inspection. The Contractor is responsible for ensuring that site access is satisfactory prior to mobilizing equipment on-site. Arranging for, obtaining, and transporting water for drilling shall be the Contractor's responsibility.

6.0 Borehole Drilling

The Contractor shall keep the following minimum records during drilling:

6.1 A descriptive log of the formation materials with depths at which each change in materials occurs.
6.2 The penetration rate of each drill pipe section, reported in minutes per joint.
6.3 Collect representative formation samples in labeled containers at regular 10-foot intervals.
6.4 Record the drill bits used (type and size) and any notable events, such as loss of circulation, hole instability, voids, etc.
6.5 A mud condition log (Section 7.0)

7.0 Mud Program

During direct rotary drilling, a mud program shall be required. Only high-grade products shall be used in the make-up of the drilling fluid. The purpose of the mud program is to prevent formation invasion by drilling fluid and to reduce the potential for other downhole problems. Solids control is very important to limiting water loss and the desanding equipment should be capable of handling close to 1-1/2 times the anticipated maximum pumping volume, with fines removal down to approximately 25 microns.

The Contractor shall either provide and follow a mud program designed by a qualified Mud Engineer or shall follow the mud program described below. The program involves maintaining mud values within specified limits and checking/conditioning mud at least once every 4 hours during drilling. The program may be modified if necessary during drilling, however, the reasons for any modification to the program should be noted. Sufficient time for proper monitoring and conditioning of the drilling mud every morning and as needed during drilling should be taken and will be expected. The basic monitoring components of the mud program are as follows:

7.1 Drilling fluid pH should be between 8.5-9 units. Adjust make-up water pH with soda ash before adding bentonite. pH strips are acceptable for testing.
7.2 Mud weight should be less than 9.0 pounds per gallon. A mud balance is required.
7.3 Mud viscosity should generally be between 35-50 seconds. Viscosity should only be as high as needed to clean out hole. A marsh funnel viscometer is required.
7.4 Sand content should be less than 2 percent. An Imhoff cone or equivalent is required.

A mud conditioning polymer for shielding formation clays from hydrating is recommended (i.e., Drispac, Hydro Drill, Uni-drill, or equivalent product). The polymer should be added after all other mud adjustments are made in the morning, very slowly, while circulating. Mud viscosity increases due to the polymer should be taken into consideration when adding bentonite. The basic procedure for daily mud monitoring/adjusting is as follows:

7.5 Circulate mud in the morning. If greater volume is needed, add clean water first. Pre-treat make-up water with about 6 ounces of soda ash per 300 gallons.
7.6 Check fluid pH. Adjust using soda ash (to increase) or clean water (to decrease).
7.7 Check mud viscosity. Add bentonite to increase. Allow for about 10 seconds of increased viscosity for polymer, if used.
7.8 Check sand content. If too high, circulate through desanding cones and recheck.
7.9 Check mud weight. If too high, add clean water and return to step 7.6.
7.10 Add polymer last. Polymer should be added very slowly and used sparingly. Check final viscosity.
7.11 Recheck mud values every 4 hours during drilling. All mud values and product quantities used should be recorded in a log.

8.0 Geophysical Logs

Downhole geophysical logs listed in the Scope of Work will be performed by a qualified geophysical logging company as soon as possible upon completion of the pilot hole and removal of the drill pipe. The drilling contractor will be responsible for coordinating the arrival time of the geophysical logging truck to minimize delay and for providing an open borehole for logging to the total pilot hole depth. The vertical scale for the log shall be 1 inch = 50 feet. Four hard copies and one electronic copy shall be provided to the project inspector. The logging company shall provide documentation that downhole tools have been calibrated within one month prior to use in testing.

9.0 Final Design

The contractor shall be entitled to a decision in writing from the project inspector as to final well design within twenty four (24) hours of the completion of the geophysical survey of the test hole. The preliminary design listed in the Scope of Work may be changed.

10.0 Casing Placement

Well casing installation shall begin as soon as possible after the bore hole has been drilled to the total depth and to the final design diameter. Prior to moving on-site, a material specification for the casing supplied to the project, including blank and screened sections, shall be submitted to the project inspector. All casing material delivered to the site shall be new. The well casing shall be suspended from the top and allowed to hang freely in the borehole at all times during well construction.

11.0 Filter Pack Placement

The filter pack shall consist of clean, mostly rounded to subrounded silica sand, graded to the specifications listed in the Scope of Work. Prior to installation, a recent sieve analysis of the product being used must be provided to the project inspector. The project inspector has the right to reject a filter pack if (1) the sieve analysis is unsatisfactory or not representative of the actual delivered load, if (2) the grains are mostly angular to highly angular, or if (3) the sand has more than a trace of impurities, especially of calcium carbonate (such as shell fragments). The filter pack shall be protected from contamination during storage. If stored on site, the filter pack shall be placed on new plastic sheeting (visqueen) and covered with new plastic sheeting.

Prior to placement of the filter pack into the annular space, the drilling fluid shall be thinned with clean water. The contractor should maintain circulation in the hole from the time the thinning of the mud begins to the time when the filter pack is completely in place. The rate of filter pack placement shall not exceed 1.5 feet per minute, and placement shall proceed without interruption until completion. The depth to the top of the filter pack shall be documented upon completion of placement.

12.0 Well Development

The well shall be initially developed by air-lifting opposite the screened sections beginning with the shallowest section. Each section shall be worked for a minimum of three passes before moving to the next section. The duration of air-lift development is identified in the scope of work. Well development shall be completed with a test pump.

Well development shall consist of cycles of pumping and surging until the discharged water is clear of sand, silt, and mud. Pumping intervals of approximately 15-20 minutes shall be alternated with 5-10 minute recovery periods to allow the water in the pump column to flow back into the screened sections and into the aquifers. This procedure, with increasing pumping rates, shall be repeated as development of the well continues and shall be done in a manner satisfactory to the Geologist. Static and pumping water levels shall be recorded at the beginning and ending of each pumping cycle. Pump development of the well shall continue until specific capacity is stable and the well produces not more than five parts per million of sand by volume 15 to 20 minutes after surging.

Contractor shall perform a sand production test at the conclusion of development. Accumulated sand shall be recorded every 5-minutes from the start of pumping through a 2-hour pumping cycle at a discharge rate determined by the Geologist. Average sand production shall not exceed 5 parts per million over the 2-hour pumping cycle.

Development water shall be discharged on-site as directed by the project inspector with adequate measures to protect against erosion. Water shall not be allowed to flow onto a roadway, into storm drains, natural drainage ways, or environmentally sensitive areas, or onto adjacent properties. If required by the project inspector, temporary development water containment (sump or settling tank) shall be provided.

13.0 Pumping Tests

The test pump capacity and depth setting shall conform to the Scope of Work. Pumping tests shall be conducted as directed by the project inspector for the duration listed in the Scope of Work. Flow shall be measured using a calibrated in-line flow meter installed in accordance with the manufacturers' specifications. Water shall be discharged on-site as directed by the project inspector with adequate measures to protect against erosion. Water shall not be allowed to flow onto a roadway, into storm drains, natural drainage ways, or environmentally sensitive areas, or onto adjacent properties. Up to 300 feet of irrigation pipe terminating with sprinkler heads shall be provided.

Groundwater samples shall be collected at the end of the constant discharge test and submitted to a State-certified analytical laboratory for analyses listed in the Scope of Work.

14.0 Drill Cuttings and Drilling Fluids

Drilling cuttings shall be spread out on-site in the vicinity of the work area as directed by the project inspector. Drilling fluids shall be contained during drilling and construction operations and removed from the site for proper disposal at contractors expense upon completion of well construction. On-site containment of drilling fluid shall be in tanks at contractors expense.

15.0 Well Disinfection

Prior to capping the well, Contractor shall disinfect well to remove any bacteriological contamination in accordance with the requirements of AWWA C654-03. The disinfectant shall be granular calcium hypochlorite, 65-70% free chlorine, added to the well at sufficient dosage to producing a minium 50 mg/l chlorine solution. A doubly-capped, perforated pipe or basket container filled with the granular chlorine compound shall be moved up and down the entire water filled casing and screened section until all the chlorine has dissolved. The chlorinated water shall remain in the well.

16.0 Site Security

The test hole/well shall be covered and secured against entry when contractor is not present on site. Any after-hours security services shall be at contractor's discretion and expense.

17.0 Final Inspection

The project inspector will inspect the site and wellhead prior to releasing the contractor from the job. All trash, extra materials, and drilling fluids generated by the contractor must be off the site, and any temporary sumps or berms returned to natural grade.

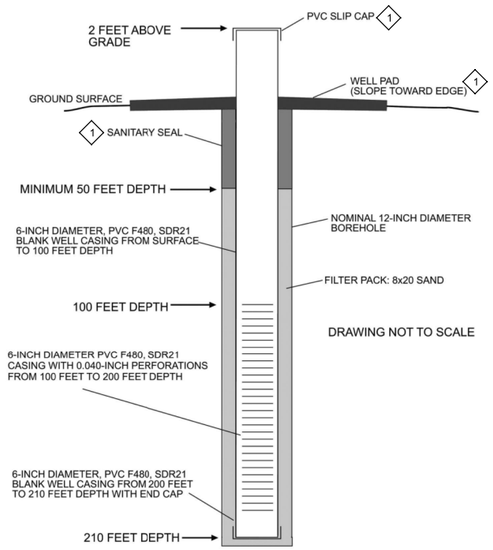

GENERAL NOTES

1. SEE 01C01 FOR GENERAL CIVIL NOTES.
2. SEE 03C02 AND SECTION 11313I FOR ADDITIONAL REQUIREMENTS.

KEY NOTES

(1) MODIFY PER DWG 03C02.

PROFESSIONAL GEOLOGIST — SPENCER J. HARRIS — No. HG 633 — CERTIFIED HYDROGEOLOGIST — STATE OF CALIFORNIA

CHG CLEATH-HARRIS GEOLOGISTS — SAN LUIS OBISPO, CA

REV	DATE	BY	DESCRIPTION

DESIGNED SJH
DRAWN GAT
CHECKED RLG
DATE SEPT 2013

REGISTERED PROFESSIONAL ENGINEER — BRIAN GIL KANTOR — No. 52686 — CIVIL — STATE OF CALIFORNIA — 9/16/2013

carollo®

SAN LUIS OBISPO COUNTY

SAN LUIS OBISPO COUNTY
LOS OSOS WATER RECYCLING FACILITY PROJECT
CIVIL
WATER SUPPLY WELLS

VERIFY SCALES
BAR IS ONE INCH ON ORIGINAL DRAWING
0 1"
IF NOT ONE INCH ON THIS SHEET, ADJUST SCALES ACCORDINGLY

JOB NO. 8930A.11
DRAWING NO. 03C01
SHEET NO. OF 549

PROJECT NO. 8930A.11 FILE NAME: 8930A1103C01.dgn

Plot Date: 17-SEP-2013 11:50:20 AM
User: DDonk
PlotScale: 2:1
DesignScript: Carollo_Std_Pen_v0905.pen
ColorTable: gshade.ctb
Model: Layout1
LAST SAVED BY: djacobs

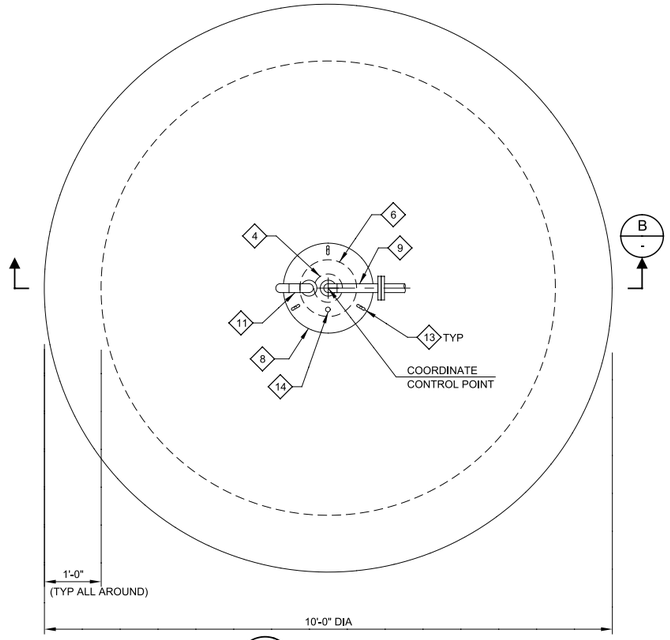

A **PLAN**
SCALE: 3/4" = 1'-0"
FILE: 8930A11-03-C-0201

TYPICAL FOR 1 & 2

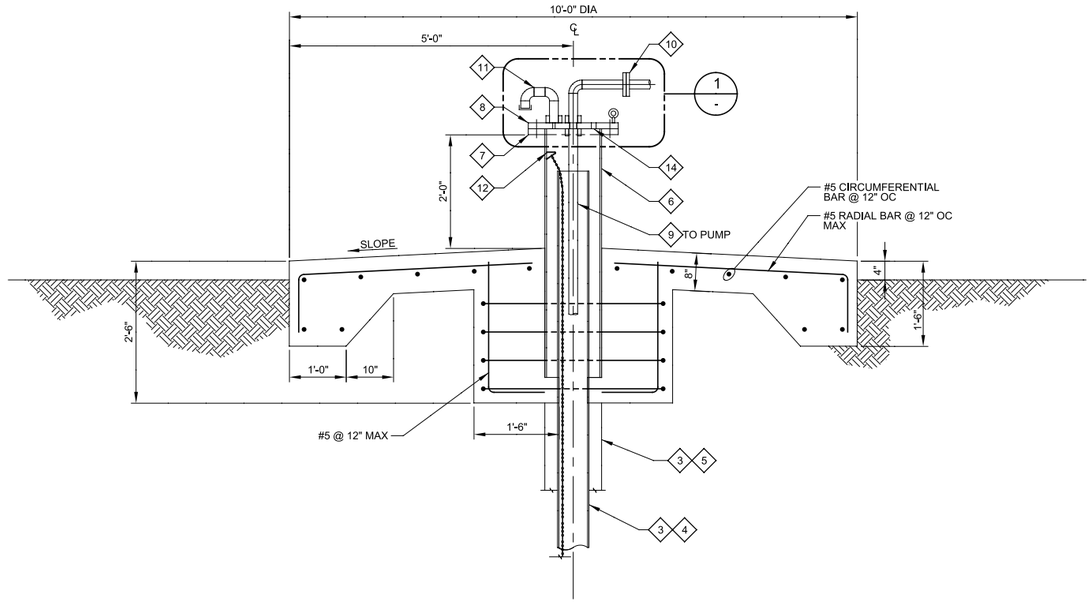

B **SECTION**
SCALE: 3/4"=1'-0"
FILE: 8930A11-03-C-0201

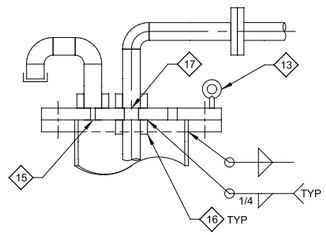

1 **ENLARGED DETAIL**
SCALE: 1 1/2"=1'-0"
FILE: 8930A11-03-C-0201

GENERAL NOTES

1. SEE 01C01 FOR GENERAL CIVIL NOTES.
2. SEE 03C01 AND SECTION 11313I FOR ADDITIONAL REQUIREMENTS.

KEY NOTES

1. GROUNDWATER WELL PUMP NO. 1, 60-PMP-711
2. GROUNDWATER WELL PUMP NO. 2, 60-PMP-713
3. PER 03C01
4. 6-INCH WELL CASING
5. SANITARY SEAL
6. 12-INCH TYPE 304 SST PIPE, 3/8-INCH WALL
7. 12-INCH 150# SST FLANGE
8. SST TAPPED BLIND FLANGE
9. 1-1/2 INCH SST COLUMN PIPE
10. 1-1/2 INCH SST FLANGE
11. 1-1/2 INCH SST VENT WITH SST INSECT SCREEN
12. SST HOOK FOR PUMP LIFTING CABLE
13. 1/2-INCH MIN DIAMETER SST LIFTING EYE (TYP OF 3 PER WELL)
14. DRILL HOLES FOR POWER AND CONTROL CABLES, AIR TUBE, AND LEVEL SENSOR. SEAL WITH RUBBER GROMMETS.
15. DRILL 1/2 INCH HOLE
16. 1-1/2 INCH SST HALF COUPLING (TYP-3)
17. DRILL 1-1/2" HOLE

REV	DATE	BY	DESCRIPTION

DESIGNED LJE
DRAWN PS
CHECKED RLG
DATE SEPT 2013

REGISTERED PROFESSIONAL ENGINEER
BRIAN GIL KANTOR
No. 62686
CIVIL
STATE OF CALIFORNIA
9/16/2013

carollo

SAN LUIS OBISPO COUNTY

SAN LUIS OBISPO COUNTY
LOS OSOS WATER RECYCLING FACILITY PROJECT
CIVIL
WATER SUPPLY WELL PUMPS

VERIFY SCALES
BAR IS ONE INCH ON ORIGINAL DRAWING
0 1"
IF NOT ONE INCH ON THIS SHEET, ADJUST SCALES ACCORDINGLY

JOB NO. 8930A.11
DRAWING NO. 03C02
SHEET NO. OF 549

PROJECT NO. 8930A.11 FILE NAME: 8930A1103C02.dgn

Plot Date: 17-SEP-2013 10:09:04 AM User: DDonk PlotScale: 2:1 DesignScript: Carollo_Std_Pen_v0905.pen ColorTable: gshade.ctb Model: Layout1 LAST SAVED BY: ddonk

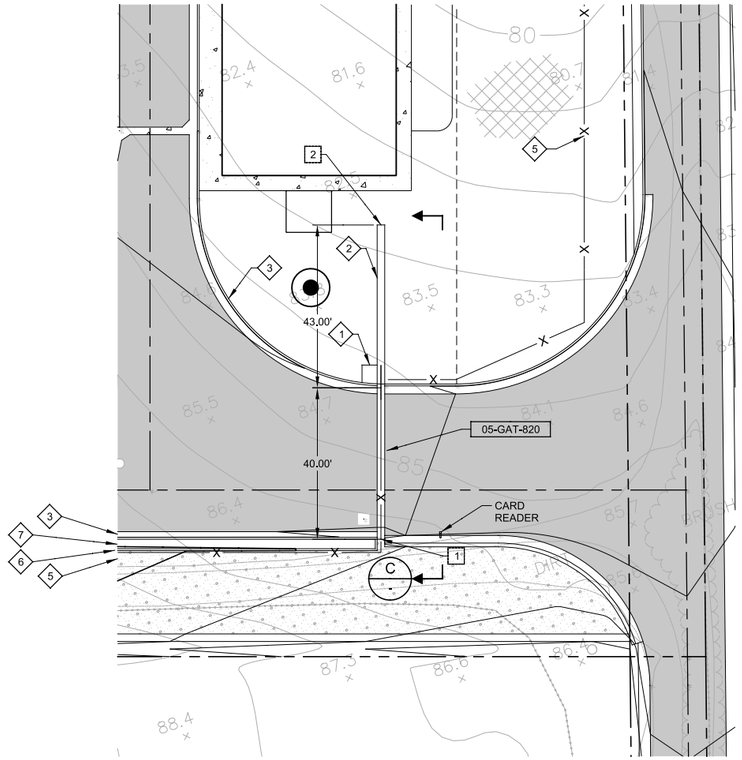

A PLAN - MAIN ENTRANCE

A / 01C05

SCALE: 1" = 20'
FILE: 8930A11-01-C-0101

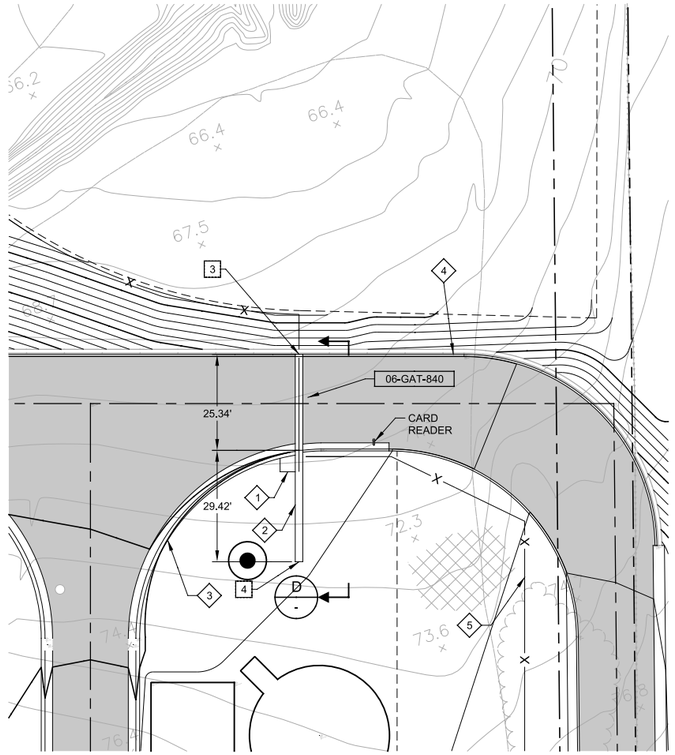

B PLAN - SERVICE ENTRANCE

B / 01C05

SCALE: 1" = 20'
FILE: 8930A11-01-C-0101

1. SEE 01C01 FOR GENERAL CIVIL NOTES.

KEY NOTES

1. GATE OPERATOR PAD PER DETAIL A ON SHEET 03C04.
2. INSTALL V-RAIL PER DETAIL C ON SHEET 03C04.
3. CONCRETE ROLLED CURB
4. EARTH RETAINING WALL
5. CHAIN LINK FENCE
6. CONCRETE CURB
7. PLANTER STRIP

COORDINATE CONTROL DATA

1	N 5726505.93	E 2309863.55
2	N 5726532.76	E 2309942.10
3	N 5726611.67	E 2310191.46
4	N 5726593.99	E 2310139.64

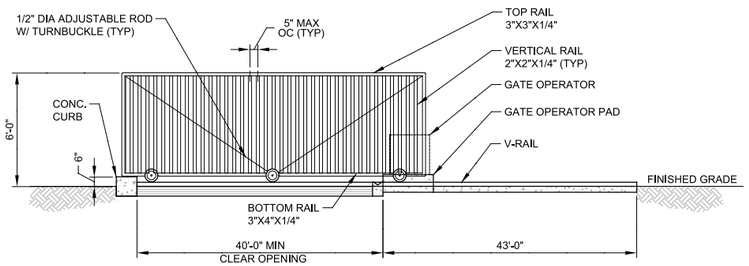

GATE CLOSED
POSITION

C SECURITY GATE ELEVATION

C / -

SCALE: NTS
FILE: 8930A11-01-C-0302

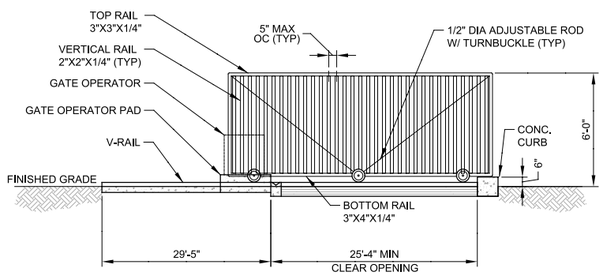

GATE CLOSED
POSITION

D SECURITY GATE ELEVATION

D / -

SCALE: NTS
FILE: 8930A11-01-C-0302

REV	DATE	BY	DESCRIPTION

DESIGNED HK
DRAWN PS
CHECKED RLG
DATE SEPT 2013

REGISTERED PROFESSIONAL ENGINEER
JUAN GIL KASTNER
No. 62686
CIVIL
STATE OF CALIFORNIA
9/16/2013

carollo

SAN LUIS OBISPO COUNTY

SAN LUIS OBISPO COUNTY

LOS OSOS WATER RECYCLING FACILITY PROJECT

CIVIL

ENTRANCE GATES
PLANS AND ELEVATIONS

VERIFY SCALES
BAR IS ONE INCH ON ORIGINAL DRAWING
0 1"
IF NOT ONE INCH ON THIS SHEET, ADJUST SCALES ACCORDINGLY

JOB NO. 8930A.11
DRAWING NO. 03C03
SHEET NO. OF 549

PROJECT NO. 8930A.11
FILE NAME: 8930A1103C03.dgn

Plot Date: 17-SEP-2013 10:09:16 AM
User: DDonk
PlotScale: 2:1
DesignScript: Carollo_Std_Pen_v0905.pen
ColorTable: gshade.ctb
Model: Layout1
LAST SAVED BY: ddonk

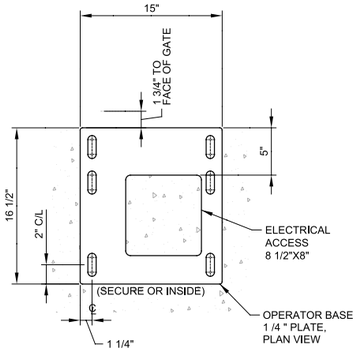

NOTE:
1. THIS TEMPLATE IS FOR BOTH RIGHT & LEFT OPERATOR

1 - DIMENSIONS OF OPERATOR AND BASE

SCALE: NTS (FENCE / GATE SIDE)
FILE: 8930A11-03-C-0300

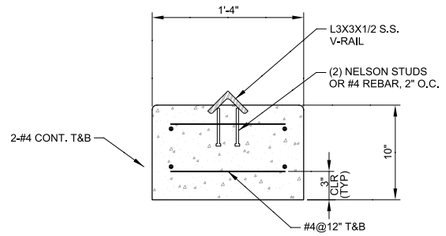

NOTE:
1. INSTALL CONSTRUCTION JOINTS AT 15'-0" O.C.
2. INSTALL ANGLE V-RAIL LEVEL, UNLESS OTHERWISE NOTED.

C 03C03 - V-RAIL

SCALE: NTS
FILE: 8930A11-01-C-0303

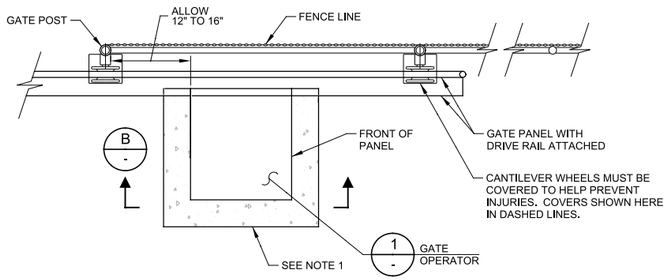

NOTE:
1. MINIMUM CONCRETE SLAB DIMENSIONS ARE:
   24" WIDE, 20" FROM FRONT TO BACK, AND 16" DEEP.

A 03C03 - GATE OPERATOR PAD DETAIL

SCALE: NTS
FILE: 8930A11-03-C-0300

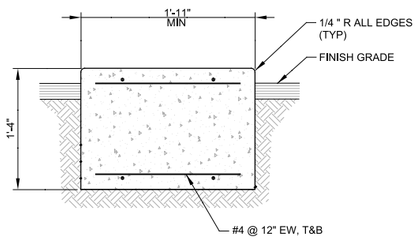

B 03C03 - GATE OPERATOR PAD SECTION

SCALE: 1/4" = 1'-0"
FILE: 8930A11-01-C-0301

REV	DATE	BY	DESCRIPTION

DESIGNED CC
DRAWN PS
CHECKED RLG
DATE SEPT 2013

REGISTERED PROFESSIONAL ENGINEER — BRIAN GIL KAISER — No. 62686 — CIVIL — STATE OF CALIFORNIA — 9/16/2013

carollo

SAN LUIS OBISPO COUNTY

SAN LUIS OBISPO COUNTY
LOS OSOS WATER RECYCLING FACILITY PROJECT
CIVIL
ENTRANCE GATES SECTIONS AND DETAILS

VERIFY SCALES
BAR IS ONE INCH ON ORIGINAL DRAWING
0 — 1"
IF NOT ONE INCH ON THIS SHEET, ADJUST SCALES ACCORDINGLY

JOB NO. 8930A.11
DRAWING NO. 03C04
SHEET NO. OF 549

PROJECT NO. 8930A.11 FILE NAME: 8930A1103C04.dgn

LAST SAVED BY: ddonk PlotScale: 2:1 Model: Layout1 ColorTable: gshade.ctb DesignScript: Carollo_Std_Pen_v0905.pen User: DDonk Plot Date: 17-SEP-2013 10:09:37 AM

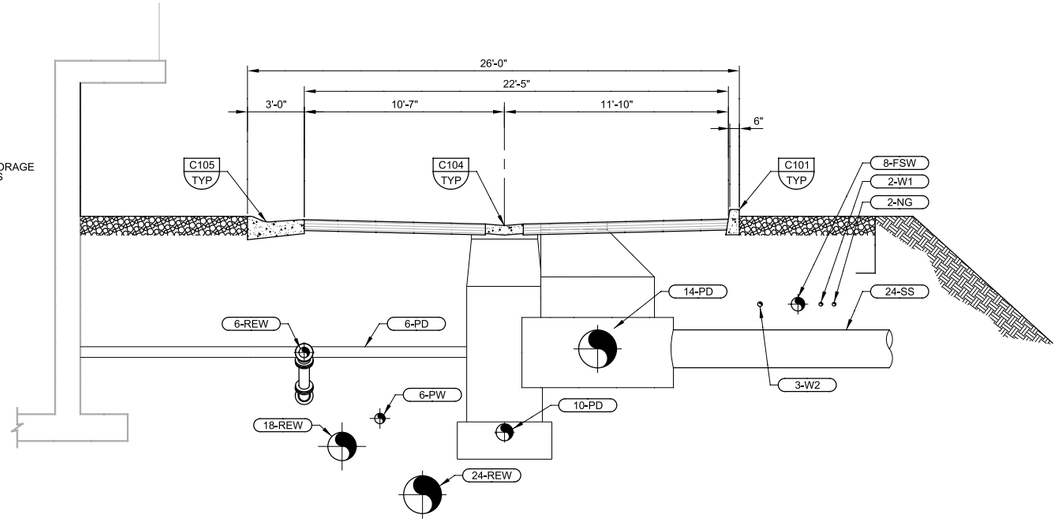

A SECTION
01C09
01C05
SCALE: 1/4" = 1'-0"
FILE: 8930A11-01-C-0305

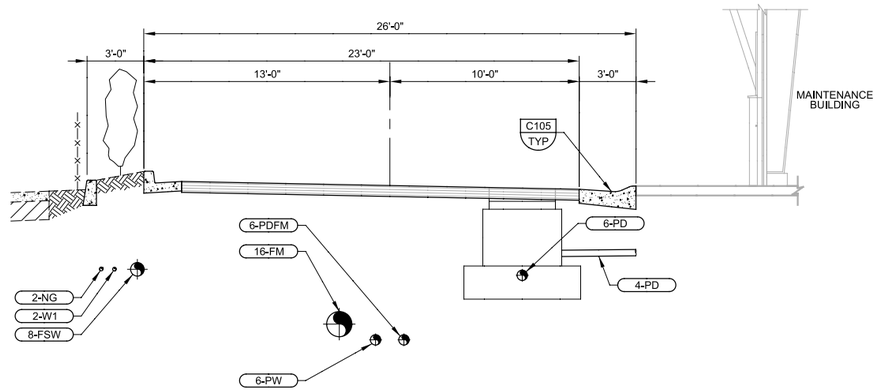

C SECTION
01C08
01C04
SCALE: 1/4" = 1'-0"
FILE: 8930A11-01-C-0305

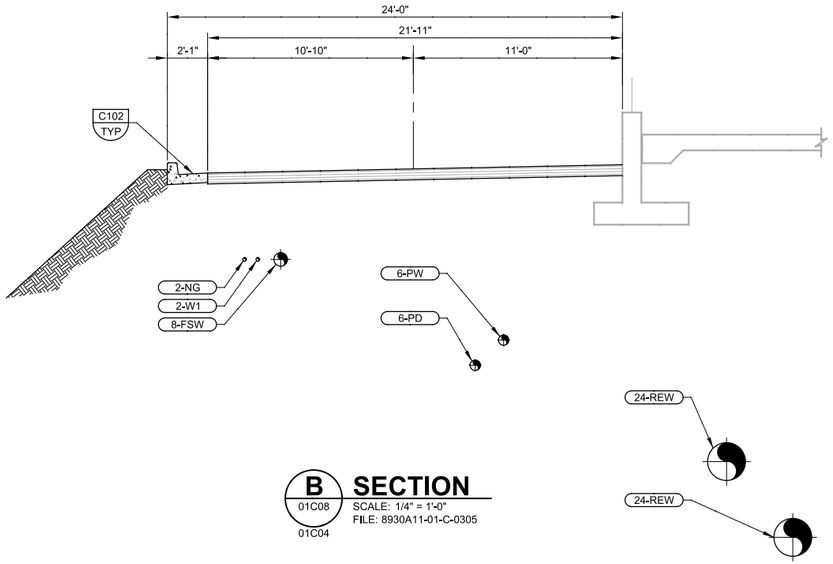

B SECTION
01C08
01C04
SCALE: 1/4" = 1'-0"
FILE: 8930A11-01-C-0305

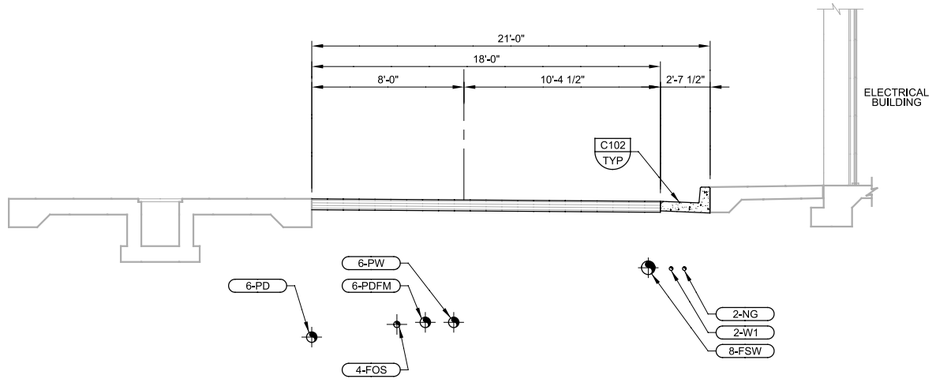

D SECTION
01C09
01C05
SCALE: 1/4" = 1'-0"
FILE: 8930A11-01-C-0305

REV	DATE	BY	DESCRIPTION

DESIGNED CC
DRAWN PS
CHECKED RLG
DATE SEPT 2013

REGISTERED PROFESSIONAL ENGINEER
JOHAN GIL KANG
No. 62686
CIVIL
STATE OF CALIFORNIA
9/16/2013

carollo®

SAN LUIS OBISPO COUNTY

SAN LUIS OBISPO COUNTY
LOS OSOS WATER RECYCLING FACILITY PROJECT
CIVIL
ROAD SECTION
YARD DETAILS

VERIFY SCALES
BAR IS ONE INCH ON ORIGINAL DRAWING
0 1"
IF NOT ONE INCH ON THIS SHEET, ADJUST SCALES ACCORDINGLY

JOB NO. 8930A.11
DRAWING NO. 03C05
SHEET NO. OF 549

PROJECT NO. 8930A.11 FILE NAME: 8930A1103C05.dgn

Plot Date: 17-SEP-2013 10:09:52 AM
User: DDonk
Model: Layout1 ColorTable: gshade.ctb DesignScript: Carollo_Std_Pen_v0905.pen PlotScale: 2:1
LAST SAVED BY: ngriffith

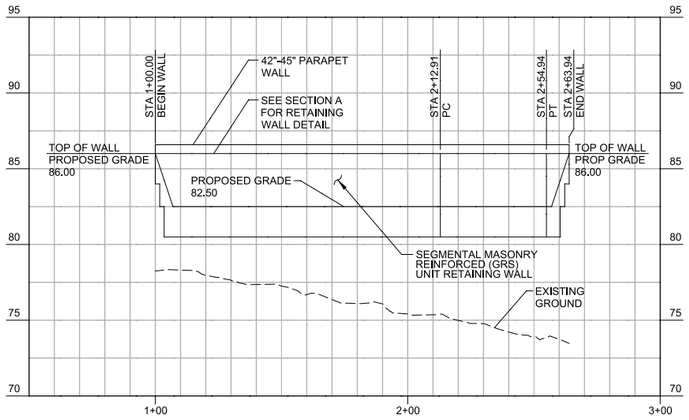

1 RETAINING WALL PROFILE

01C02

HORIZ SCALE: 1"=30'
VERT SCALE: 1"=5'
FILE: 8930A11-01-C-0200

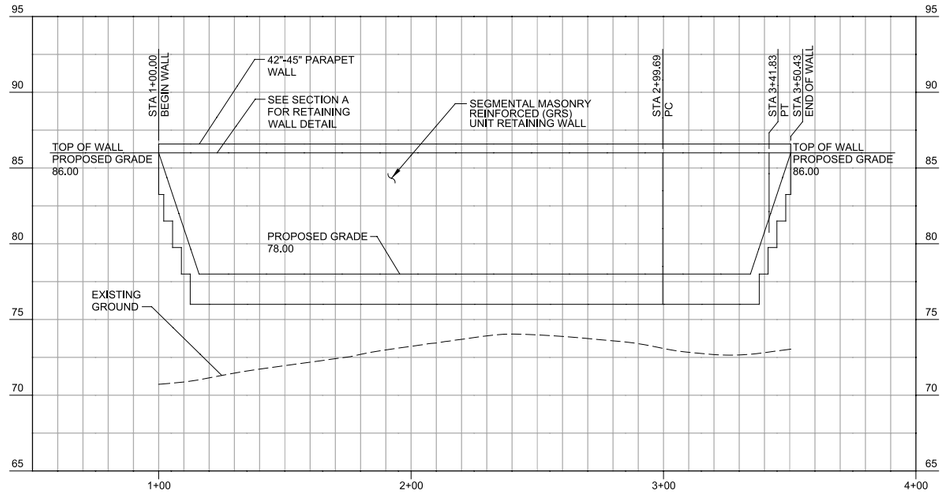

2 RETAINING WALL PROFILE

01C02
01C03

HORIZ SCALE: 1"=30'
VERT SCALE: 1"=5'
FILE: 8930A11-01-C-0200

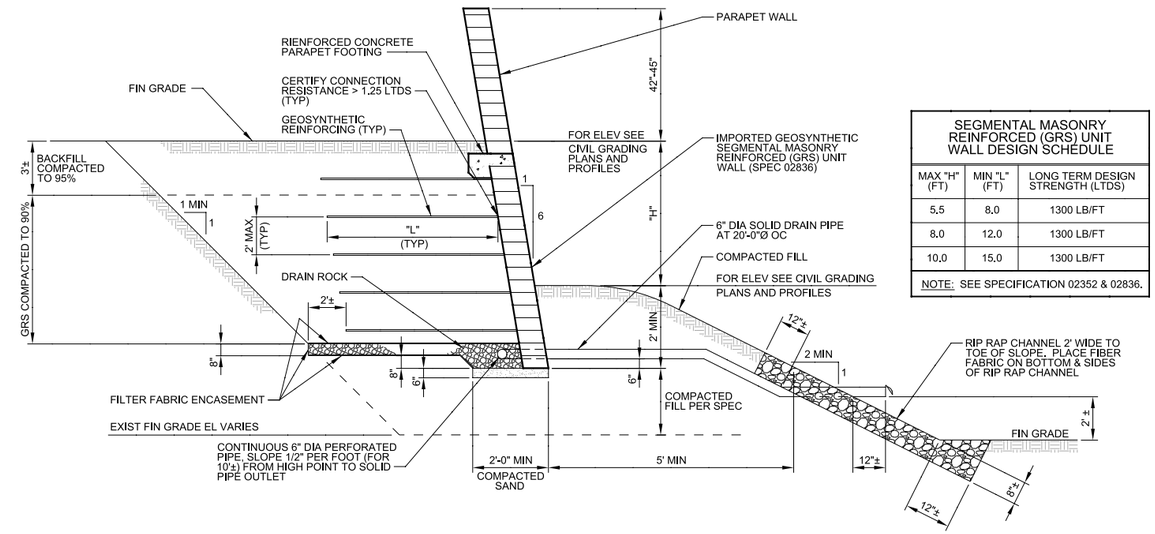

SEGMENTAL MASONRY REINFORCED (GRS) UNIT WALL DESIGN SCHEDULE		
MAX "H" (FT)	MIN "L" (FT)	LONG TERM DESIGN STRENGTH (LTDS)
5.5	8.0	1300 LB/FT
8.0	12.0	1300 LB/FT
10.0	15.0	1300 LB/FT

NOTE: SEE SPECIFICATION 02352 & 02836.

A GEOSYNTHETIC REINFORCED SEGMENTAL MASONRY UNIT RETAINING WALL - SECTION

SCALE: NTS
FILE: 8930A1103S302

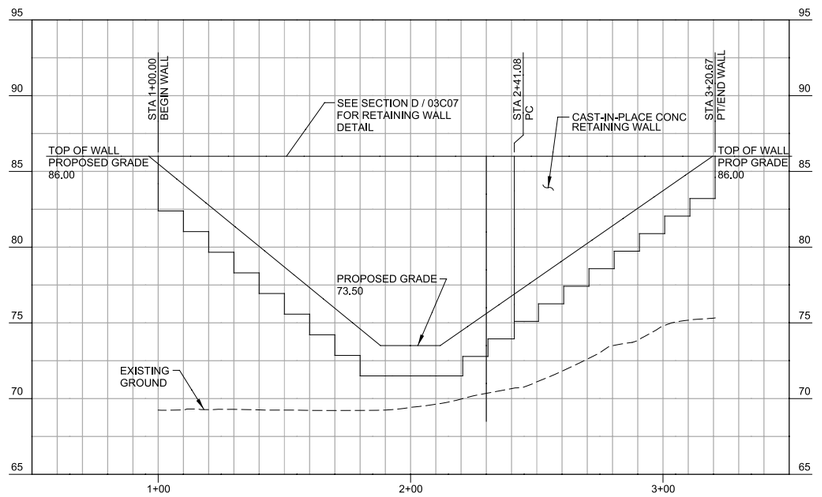

3 RETAINING WALL PROFILE

01C05

HORIZ SCALE: 1"=30'
VERT SCALE: 1"=5'
FILE: 8930A11-01-C-0200

REV	DATE	BY	DESCRIPTION

DESIGNED LS
DRAWN TVN
CHECKED RLG
DATE SEPT 2013

REGISTERED PROFESSIONAL ENGINEER — CHETAN GIL KANG — No. 62686 — CIVIL — STATE OF CALIFORNIA — 9/16/2013

carollo

SAN LUIS OBISPO COUNTY

SAN LUIS OBISPO COUNTY
LOS OSOS WATER RECYCLING FACILITY PROJECT
CIVIL
RETAINING WALL PROFILES & SECTION

VERIFY SCALES
BAR IS ONE INCH ON ORIGINAL DRAWING
0 1"
IF NOT ONE INCH ON THIS SHEET, ADJUST SCALES ACCORDINGLY

JOB NO. 8930A.11
DRAWING NO. 03C06
SHEET NO. OF 549

PROJECT NO. 8930A.11 FILE NAME: 8930A1103C06.dgn

Plot Date: 17-SEP-2013 10:10:11 AM
User: DDonk
PlotScale: 2:1
DesignScript: Carollo_Std_Pen_v0905.pen
ColorTable: gshade.ctb
Model: Layout1
LAST SAVED BY: ngriffith

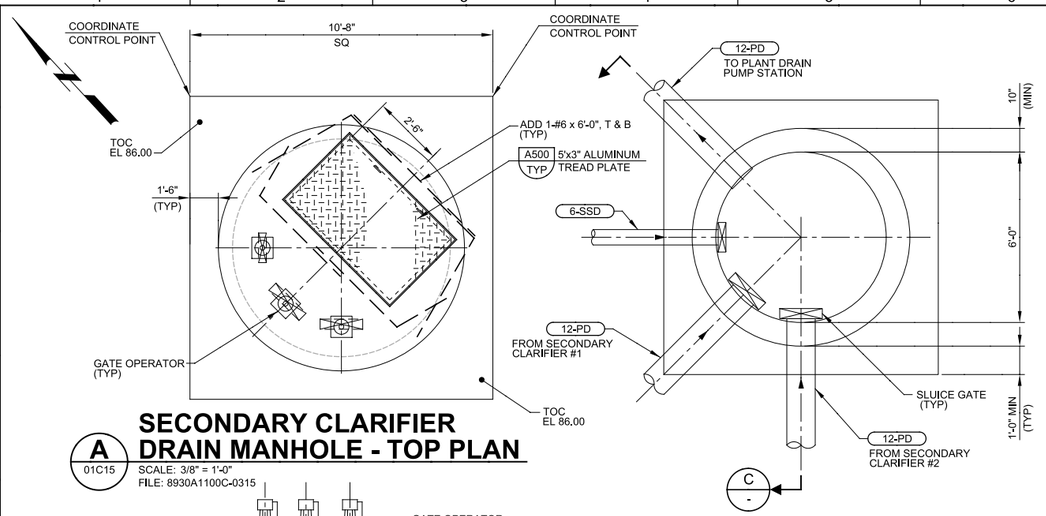

A 01C15 SECONDARY CLARIFIER DRAIN MANHOLE - TOP PLAN

SCALE: 3/8" = 1'-0"
FILE: 8930A1100C-0315

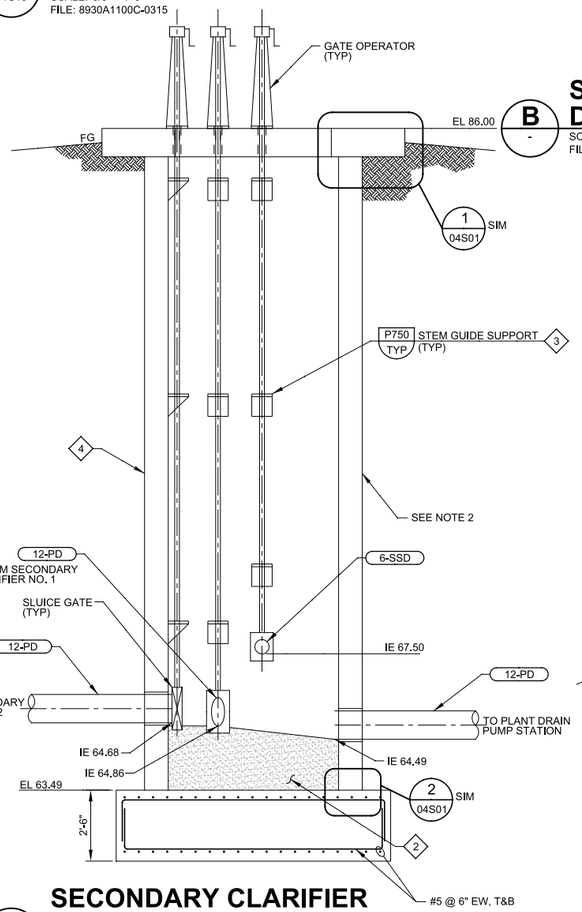

C - SECONDARY CLARIFIER DRAIN MANHOLE - SECTION

SCALE: 3/8" = 1'-0"
FILE: 8930A1100C-0315

B - SECONDARY CLARIFIER DRAIN MANHOLE - BOTTOM PLAN

SCALE: 3/8" = 1'-0"
FILE: 8930A1100C-0315

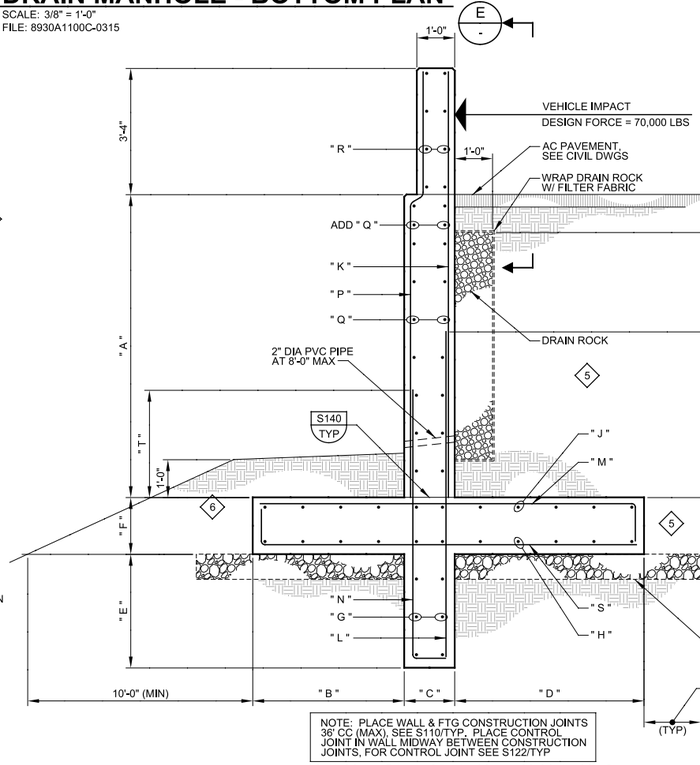

NOTE: PLACE WALL & FTG CONSTRUCTION JOINTS 36' CC (MAX), SEE S110/TYP. PLACE CONTROL JOINT IN WALL MIDWAY BETWEEN CONSTRUCTION JOINTS, FOR CONTROL JOINT SEE S122/TYP

D 03C06 CAST-IN-PLACE CONCRETE RETAINING WALL - SECTION

SCALE: 1/2" = 1'-0"
FILE: 8930A1103S303

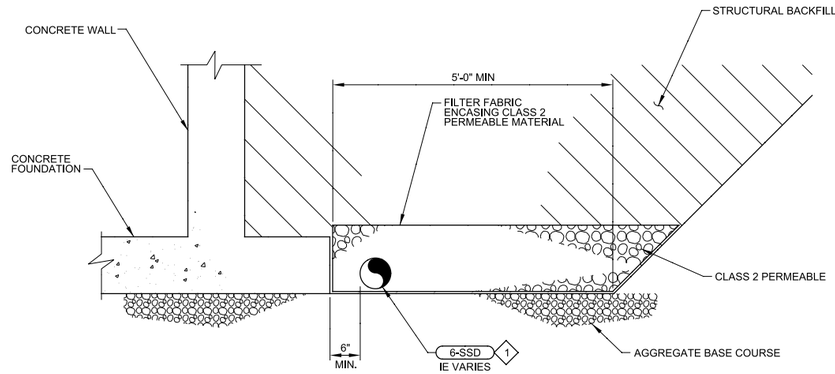

1 00G11 STRUCTURE SUBSURFACE DRAIN

SCALE: 3/4" = 1'-0"
FILE: 8930A11-01-C-0313

MARK	MAX "A" = 12'-0"	MAX "A" = 10'-0"	MAX "A" = 8'-0"	MAX "A" = 6'-0"
B	5'-0"	4'-6"	4'-3"	4'-2"
C	1'-4"	1'-3"	1'-2"	1'-0"
D	6'-0"	5'-6"	5'-3"	5'-2"
E	3'-3"	3'-0"	2'-9"	2'-6"
F	1'-6"	1'-5"	1'-4"	1'-2"
G	#6@12"	#6@12"	#6@12"	#5@12"
H	#6@12"	#6@12"	#6@12"	#5@12"
J	#6@12"	#6@12"	#6@12"	#5@12"
K	#7@12"	#7@12"	#6@12"	#6@12"
L	#7@6"	#7@6"	#6@6"	#6@6"
M	#7@12"	#7@12"	#6@12"	#6@12"
N	#6@12"	#6@12"	#6@12"	#5@12"
P	#6@12"	#6@12"	#5@12"	#5@12"
Q	#6@12"	#6@12"	#6@12"	#5@12"
R	#5@12"	#5@12"	#5@12"	#5@12"
S	#7@12"	#7@12"	#7@12"	#7@12"
T	3'-2"	3'-2"	3'-2"	2'-6"
U	6'-0"	6'-0"	5'-6"	4'-0"

GENERAL NOTES

1. SEE 01C01 FOR GENERAL CIVIL NOTES.
2. FOR GENERAL STRUCTURAL NOTES AND EARTHWORK DETAILS SEE DRAWINGS 00G10 AND 00G11.

KEY NOTES

1. PERFORATED PVC DRAIN PIPE AROUND STRUCTURE. SIZE AS INDICATED ON THE DRAWINGS.
2. NON-SHRINK GROUT. SLOPE TOWARD EFFLUENT PIPE.
3. STEM GUIDES TO BE MOUNTED ON CURVED WALL.
4. PRECAST MANHOLES:
   - A. SUBMIT (FOR APPROVAL) SHOP DWGS AND DESIGN CALCULATIONS CONFORMING TO ASTM C478, A615 (REINFORCING), ACI 550R (REINF CONC).
   - B. JOINT SEALANT MUST CONFORM TO ASHTO M-198.
   - C. USE DESIGN SOIL PRESSURE OF 90 PCF AND CONFORM TO THE SEISMIC RECOMMENDATIONS OF THE PROJECT GEOTECHNICAL REPORT.
   - D. CONTRACTOR MAY PRECAST FOUNDATION AND ROOF IF DESIGN CALCS ARE APPROVED.
   - E. AT CONTRACTOR'S OPTION, IN LIEU OF (2) TREAD PLATE HINGED DOORS, ALUMINUM HALLIDAY DOOR W/ SST HARDWARE MAY ALSO BE SUBMITTED FOR APPROVAL. (LL = 100 PSF)
5. RETAINING WALL BACKFILL SHALL BE EITHER IMPORTED MATERIAL CONFORMING TO CALTRANS STND SPEC 19-3.02.B, OR APPROVED ONSITE SANDY SOIL HAVING A SAND EQUIVALENT GREATER THAN 20, COMPACTED TO 90%.
6. ON SITE FILL COMPACTED TO 90% MINIMUM RELATIVE COMPACTION.

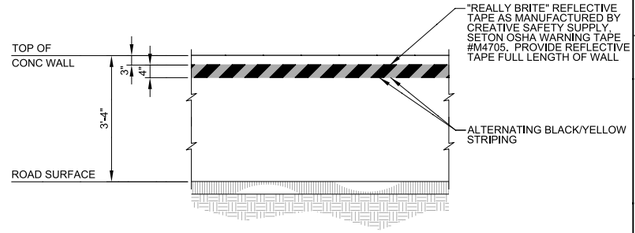

E - SECTION - WALL SAFETY STRIPE

SCALE: 1/2" = 1'-0"
FILE: 8930A1103S303

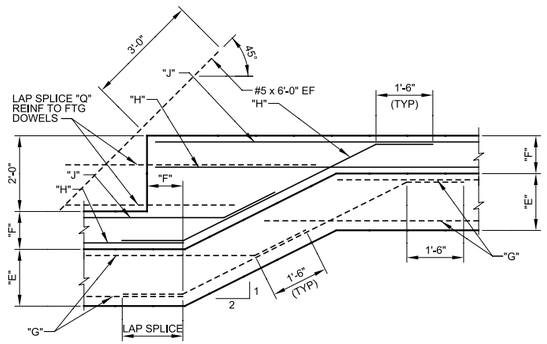

NOTE: VERT REINF NOT SHOWN FOR CLARITY

2 - TYPICAL STEPPED FOOTING

SCALE: NTS
FILE: 8930A1103S303

REV	DATE	BY	DESCRIPTION

DESIGNED LS
DRAWN PLN
CHECKED RLG
DATE SEPT 2013

REGISTERED PROFESSIONAL ENGINEER — RYAN GIL KASTEN — No. 62686 — CIVIL — STATE OF CALIFORNIA — 9/16/2013

carollo

SAN LUIS OBISPO COUNTY

SAN LUIS OBISPO COUNTY
LOS OSOS WATER RECYCLING FACILITY PROJECT
CIVIL
MISCELLANEOUS CIVIL DETAILS

VERIFY SCALES
BAR IS ONE INCH ON ORIGINAL DRAWING
0 1"
IF NOT ONE INCH ON THIS SHEET, ADJUST SCALES ACCORDINGLY

JOB NO. 8930A.11
DRAWING NO. 03C07
SHEET NO. OF 549

PROJECT NO. 8930A.11 FILE NAME: 8930A1103C07.dgn

Plot Date: 17-SEP-2013 10:10:26 AM
User: DDonk
LAST SAVED BY: ddonk
Model: Layout1 ColorTable: gshade.ctb DesignScript: Carollo_Std_Pen_v0905.pen PlotScale: 2:1

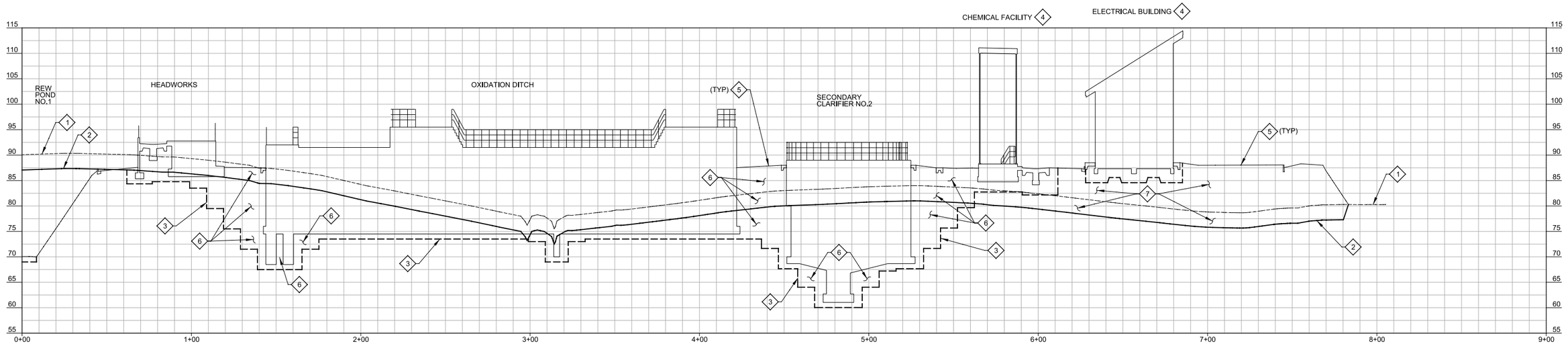

1 PLANT SECTION

01C04
01C05

HORIZ SCALE: 1"=30'
VERT SCALE: 1"=10'
FILE: 8930A11-01-C-0320

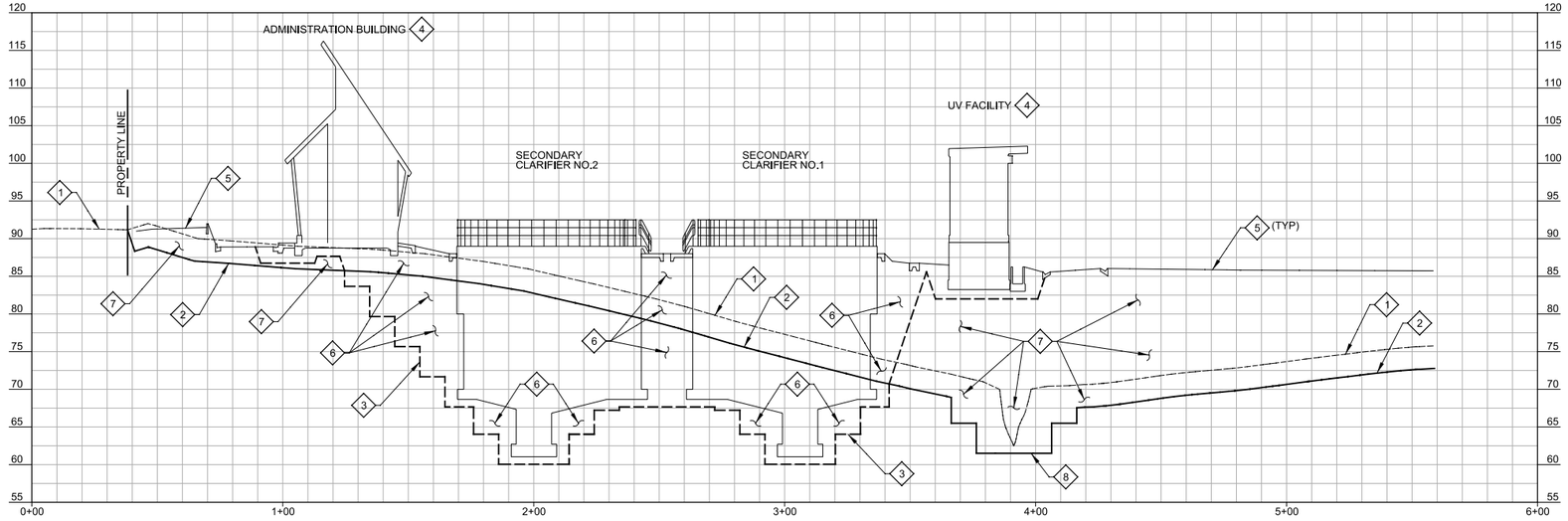

2 PLANT SECTION

01C05

HORIZ SCALE: 1"=30'
VERT SCALE: 1"=10'
FILE: 8930A11-01-C-0320

GENERAL NOTES

1. THIS DRAWING PROVIDES SIMPLIFIED OVERALL PLANT SECTIONS FOR INFORMATIONAL PURPOSES ONLY.
2. FOR PIPING, VALVING, MANHOLES, DUCTBANKS, HANDHOLES, AND OTHER BURIED COMPONENTS AND SYSTEMS, REFER TO OTHER DRAWINGS AND SPECIFICATIONS.
3. FOR PIPING, VALVING, CURVES, GUTTERS, LIGHT FIXTURES, LANDSCAPING, AND OTHER ABOVEGROUND COMPONENTS AND SYSTEMS, REFER TO OTHER DRAWINGS AND SPECIFICATIONS.
4. IF INFORMATION ON THIS DRAWING IS FOUND TO BE IN CONFLICT WITH OTHER DRAWINGS OR SPECIFICATIONS, OTHER DOCUMENTS SHALL GOVERN.
5. SEE SHEET 00G11 FOR STRUCTURAL SUBSURFACE PREPARATION REQUIRED FOR SPECIFIC STRUCTURES.
6. SEE SHEET 02C03 FOR POND LINER BASE PREPARATION REQUIRED FOR REW POND.
7. SHORING MAY BE REQUIRED BUT IS NOT SHOWN.
8. SUBSURFACE PREPARTION FOR ROAD WORK IS NOT SHOWN FOR CLARITY.

KEY NOTES

1. EXISTING GRADE
2. REMOVE EXISTING SOIL TO A DEPTH OF 3 FEET BELOW EXISTING SITE GRADES THROUGHOUT THE ENTIRE PLANT SITE
3. LIMIT OF STRUCTURAL OVEREXCAVATION
4. STRUCTURES TO BE CONSTRUCTED ON FILL (PARTIAL OR COMPLETE) PER SECTION CUT
5. FINISHED GRADE
6. STRUCTURAL BACKFILL
7. GENERAL FILL WITH SUITABLE NATIVE SOIL
8. CUT AND FILL DRAINAGE DITCH PER 01C16

REV	DATE	BY	DESCRIPTION

DESIGNED LS
DRAWN TVN
CHECKED HGK
DATE SEPT 2013

REGISTERED PROFESSIONAL ENGINEER
HAN GIL KANG
No. 62686
CIVIL
STATE OF CALIFORNIA
9/16/2013

carollo

SAN LUIS OBISPO COUNTY

SAN LUIS OBISPO COUNTY
LOS OSOS WATER RECYCLING FACILITY PROJECT
CIVIL
PLANT SECTIONS

VERIFY SCALES
BAR IS ONE INCH ON ORIGINAL DRAWING
0 1"
IF NOT ONE INCH ON THIS SHEET, ADJUST SCALES ACCORDINGLY

JOB NO. 8930A.11
DRAWING NO. 03C08
SHEET NO. OF 549

Plot Date: 17-SEP-2013 10:10:41 AM
User: DDonk
LAST SAVED BY: ddonk

PROJECT NO. 8930A.11 FILE NAME: 8930A1103C08.dgn