NOTE:
RENDERINGS ON THIS SHEET ARE AN ARTISTIC REPRESENTATION OF THE BUILDING, AND ARE PROVIDED FOR REFERENCE ONLY.

REV	DATE	BY	DESCRIPTION

DESIGNED KH
DRAWN IW
CHECKED FFG
DATE SEPTEMBER 2013

LICENSED ARCHITECT STEVEN D. PULTS NO. 8641 REN. 06-30-15 STATE OF CALIFORNIA

PULTS Steven D. Pults, AIA & Associates, LLP

carollo

SAN LUIS OBISPO COUNTY

SAN LUIS OBISPO COUNTY
LOS OSOS WATER RECYCLING FACILITY PROJECT
ARCHITECTURAL
ADMINISTRATION BUILDING
RENDERING

VERIFY SCALES
BAR IS ONE INCH ON ORIGINAL DRAWING
0 1"
IF NOT ONE INCH ON THIS SHEET, ADJUST SCALES ACCORDINGLY

JOB NO. 8930A.11
DRAWING NO. 05AA00
SHEET NO. XXX OF XXX

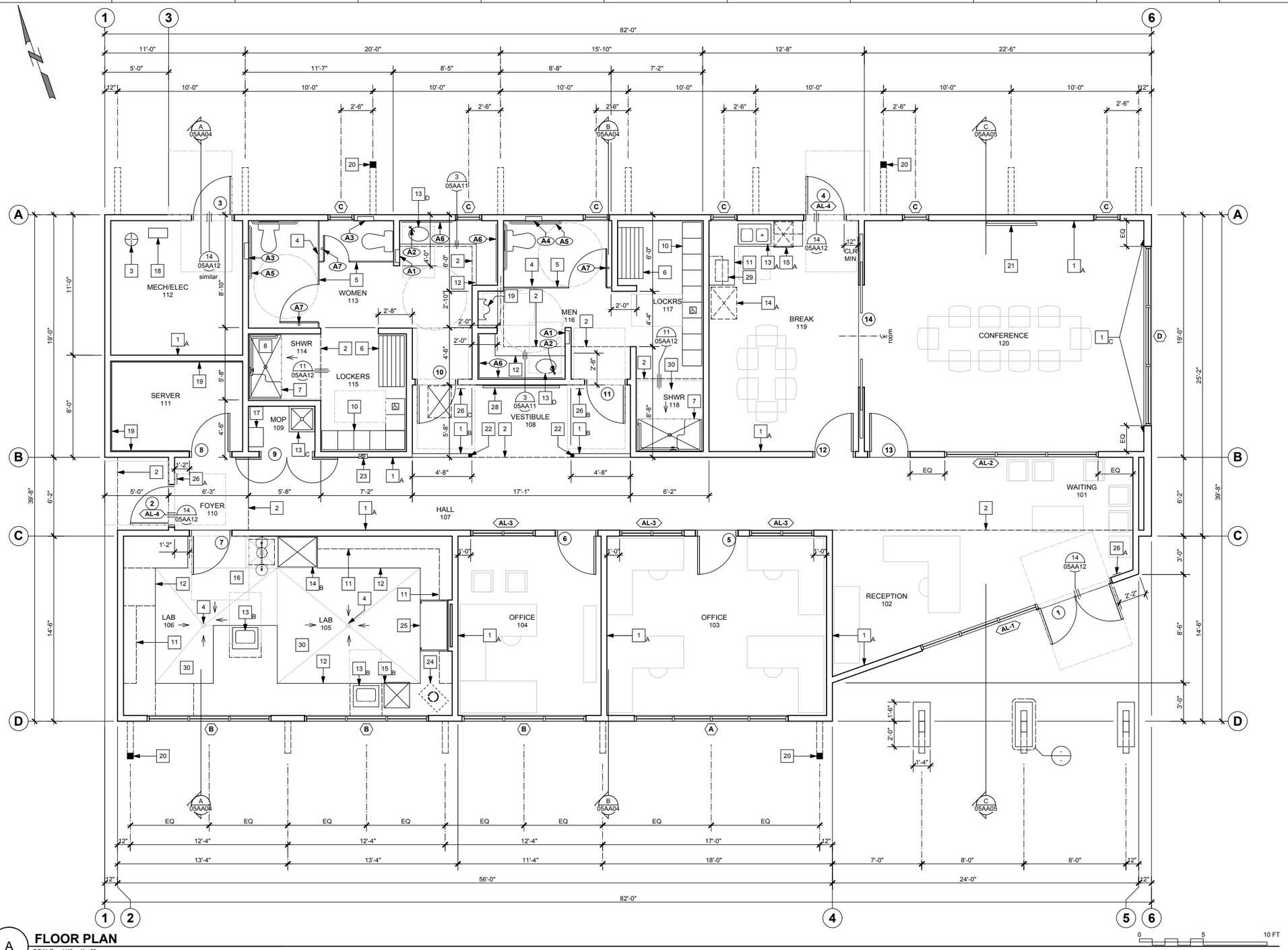

A **FLOOR PLAN**
SCALE: 1/4" = 1' - 0"

FLOOR PLAN GENERAL NOTES

1. It is the responsibility of the General Contractor to verify all existing conditions prior to constructio Any discrepancies shall be brought to the attention of the Architect.
2. Contractor shall provide a portable 2A10BC fire extinguisher on site during construction.
3. All plumbing walls & walls with recessed accessories shall be 2X6 wood stud with R-19 batt insulation, U.N.O.
4. All interior walls shall have R-19 batt insulation in walls.
5. Fire extinguishers shall be 2A10BC in cabinet (Larsen's: Vertical DuoStainless Steel w/ Lock or equal). Mount at +48" to centerline of valve handle. Refer to detail 3, sheet 05AA11

FLOOR PLAN REFERENCE NOTES

1. WOOD STUD WALL
   A: 2X6 STUD WALL REFER TO STRUCTURAL DRAWINGS FOR BUILDING 05
   FUR OUT WALLS ADJACENT TO INTERIOR SHEAR WALLS
   B: 2X4 STUD LOW WALL @ +72" AFF
   C: 2X8 STUD WALL REFER TO STRUCTURAL DRAWINGS FOR BUILDING 05
2. LINE OF SOFFIT ABOVE
3. FIRE RISER, REFER TO FIRE PLAN & SPRINKLER DRAWINGS FOR BUILDING 05
4. FLOOR DRAIN, REFER TO PLUMBING DRAWINGS FOR BUILDING 05
5. STAINLESS STEEL TOILET PARTITION, TYP
6. (2) 12"x48" STAINLESS STEEL LOCKER ROOM BENCH
7. ADA ACCESSIBLE SHOWER SEAT. REFER TO SHEET 05AA11FOR ACCESSIBILITY REQUIREMENTS AND SPECIFICATIONS.
8. ADA ACCESSIBLE SHOWER STALL, REFER TO 05AA11
9. ADA ACCESSIBLE URINAL, REFER TO MOUNTING HT SCHEDULE, REFER TO SHEET 05AA11
10. 3-WIDE, DOUBLE TIER STAINLESS STL STORAGE LOCKER (TYP OF 3) AMERICAN LOCKER, AMBASSADOR STAINLESS STEEL LOCKER 12" X 18" X 36" OR APPROVED EQUAL
11. CABINETRY, REFER TO CABINET ELEVATIONS SHT 05AA07
12. SOLID COUNTERTOP, REFER TO CABINET ELEVATIONS ON SHEET 05AA07
13. SINK
    A: STAINLESS, SELF-RIMMING, DOUBLE-BOWL SINK
    B: INTEGRAL EPOXY SINK, REFER TO 05AA07
    C: MOP SINK
    D BATHROOM SINK
14. REFRIGERATOR (N.I.C.)
    A: BREAK ROOM
    B: LAB
15. DISHWASHER
    A: BREAK ROOM KENMOORE ELITE MODEL: 14683 OR APPROVED EQUAL
    B: MIELE G 7804 STAINLESS STEEL PROFESSIONAL DISHWASHER OR APPROVED E(
16. EMERGENCY EYEWASH STATION, REFER TO PLUMBING DRAWINGS FOR BLDG 05
17. WATER HEATER ABOVE, MOUNT AS CLOSE TO CEILING AS POSSIBLE
18. VACUUM PUMP, REFER TO PLUMBING DRAWINGS FOR BUILDING 05
19. PROVIDE 3/4" FIRE TREATED PLYWOOD BACKERBOARD, FULL HEIGHT.
20. DOWNSPOUT. MOUNT TO AND FOLLOW OUTRIGGER TO DRAINBOX. SEE 05AA15 FOR MORE INFORMATION
21. TELEVISION MONITOR (N.I.C.), PROVIDE BACKING AS NECESSARY, VERIFY MOUNTING HEIGHT WITH CLIENT
22. WALL BRACE SEE 6/05AA10
23. FIRE EXTINGUISHER, REFER TO GENERAL NOTES & 6/05AA06
24. AUTOCLAVE (N.I.C.), REFER TO MECHANICAL DRAWINGS FOR VENTING
25. FUME HOOD REFER TO MECHANICAL DRAWINGS FOR BUILDING 05
26. TACTILE SIGNAGE, REFER TO 05AA04
    A: "EXIT"
    B: "MEN"
    C: "WOMEN"
27. ATTIC ACCESS. 22"X30" IN OPEN TRUSS BAY
28. BULLETIN BOARD (N.I.C.)
29. COUNTERTOP MICROWAVE: KENWWOD ELITE MODEL: 74229 OR APPROVED EQUAL
30. SLOPING MOTOAR BED OVER DEPRESED SLAB. SLOPE NOT TO EXCEED 1%
31. FUR OUT WALL PER FUME HOOD MFGR SPECIFICATIONS

BUILDING DATA

BUILDING AREA:	3,020 SF
CONSTRUCTION TYPE:	V-B SPRINKLERED
TRUE BLDG HEIGHT LIMIT:	+26'-6"
OCCUPANCY:	B

ACCESSORY SCHEDULE

MARK	DESCRIPTION	MODEL
A1	RECESSED PAPER TOWEL DISPENSER/WASTE BIN	B-3944
A1.1	SURFACE MOUNT PAPER TOWEL DISPENSER/WASTE BIN	B-3699
A2	COUNTER MOUNT SOAP DISPENSER	B-822
A3	COMBINATION RECESSED TOILET SEATCOVER DISPENSER, SANITARY NAPKIN DISPOSAL AND TOILET TISSUE DISPENSER	B-3574
A4	COMBINATION RECESSED TOILET SEATCOVER DISPENSER AND TOILET TISSUE DISPENSER	B-3474
A5	GRAB BAR	B-6806.99
A6	MIRROR, FULL HT FROM BOT OF SOFFIT TO TOP OF SPLASH X FULL WIDTH OF COUNTER	
A7	SURFACE MOUNT COAT HOOK	B-6827

NOTE: ALL ACCESSORIES ARE BOBRICK OR EQUAL

REV	DATE	BY	DESCRIPTION

DESIGNED KH
DRAWN IW
CHECKED FFG
DATE SEPTEMBER 2013

LICENSED ARCHITECT STEVEN D. PULTS NO. 8611 REN. 06-30-15 STATE OF CALIFORNIA

PULTS Steven D. Pults, AIA & Associates, LLP

carollo

SAN LUIS OBISPO COUNTY

SAN LUIS OBISPO COUNTY
LOS OSOS WATER RECYCLING FACILITY PROJECT
ARCHITECTURAL
ADMINSTRATION BUILDING
FLOOR PLAN

VERIFY SCALES
BAR IS ONE INCH ON ORIGINAL DRAWING
0 1"
IF NOT ONE INCH ON THIS SHEET, ADJUST SCALES ACCORDINGLY

JOB NO. 8930A.11
DRAWING NO. 05AA01
SHEET NO. XXX OF XXX

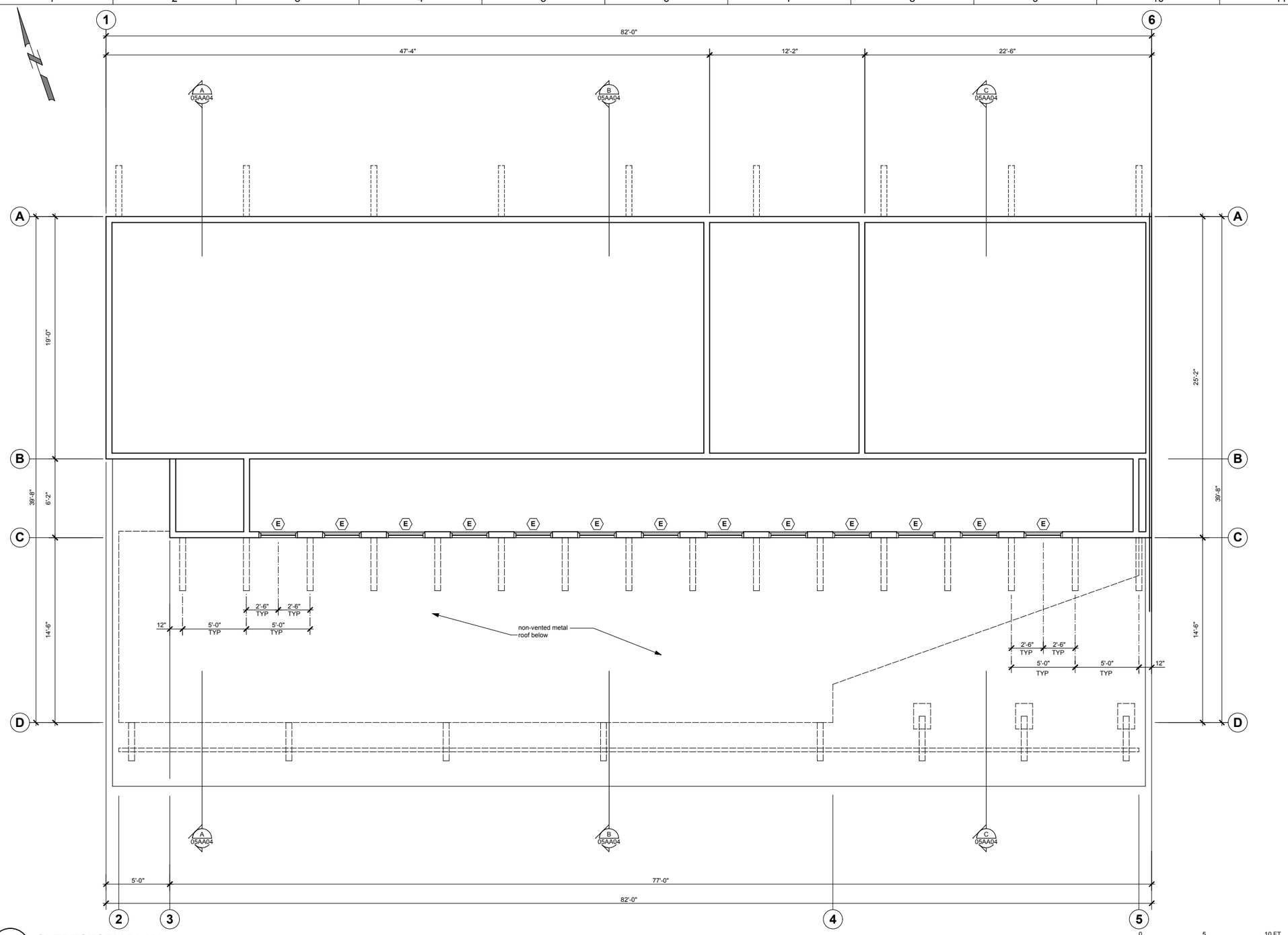

1 **CLERESTORY PLAN**
SCALE: 1/4" = 1' - 0"

REV	DATE	BY	DESCRIPTION

DESIGNED KH
DRAWN IW
CHECKED FFG
DATE SEPTEMBER 2013

LICENSED ARCHITECT STEVEN D. PULTS C-18025 REN. 06-30-15 STATE OF CALIFORNIA

PULTS Steven D. Pults, AIA & Associates, LLP

carollo

SAN LUIS OBISPO COUNTY

SAN LUIS OBISPO COUNTY
LOS OSOS WATER RECYCLING FACILITY PROJECT
ARCHITECTURAL
ADMINISTRATION BUILDING
CLERESTORY PLAN

VERIFY SCALES
BAR IS ONE INCH ON ORIGINAL DRAWING
0 1"
IF NOT ONE INCH ON THIS SHEET, ADJUST SCALES ACCORDINGLY

JOB NO. 8930A.11
DRAWING NO. 05AA02
SHEET NO. XXX OF XXX

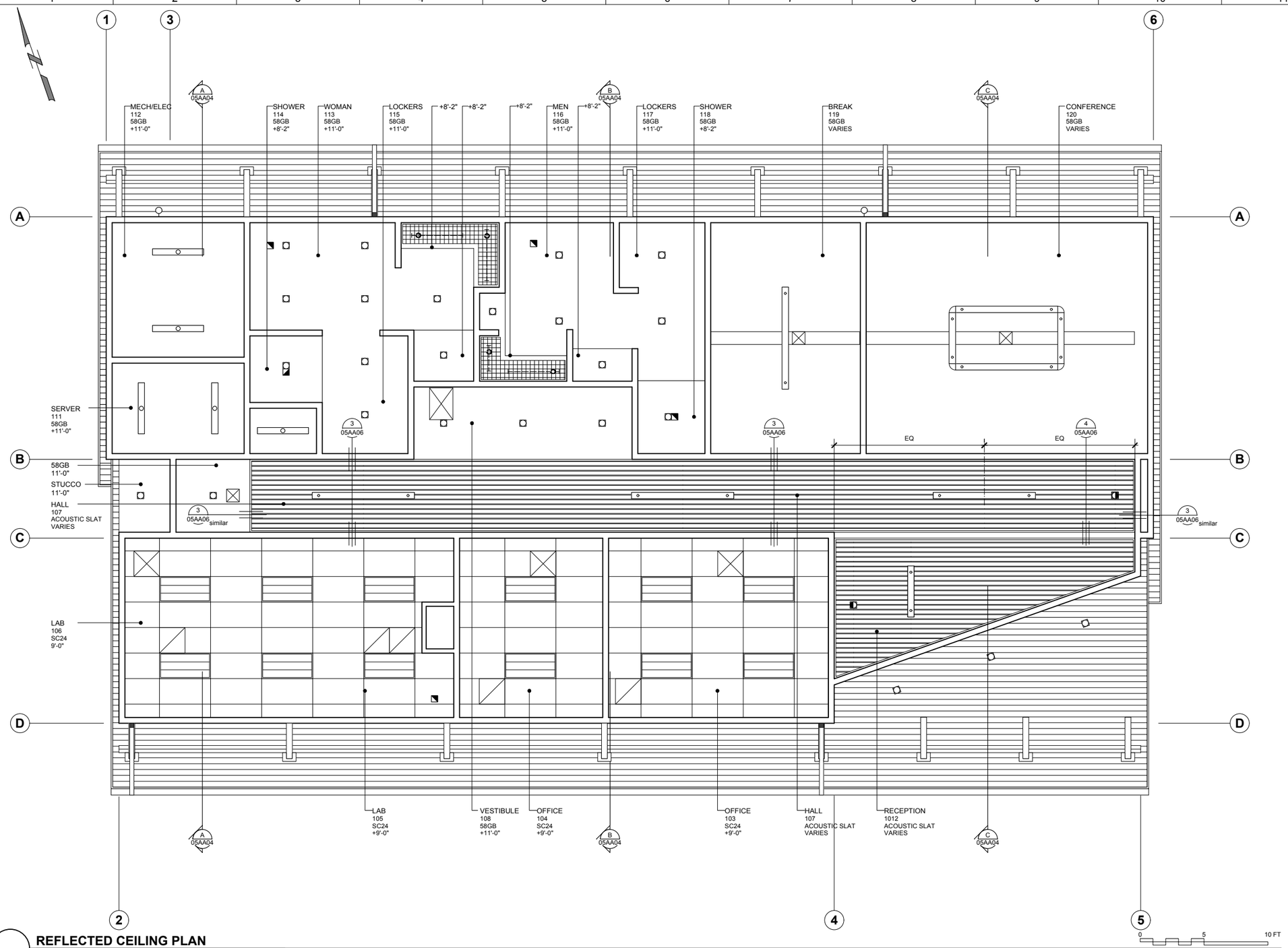

LEGEND

- 2 X 4 RECESSED DIRECT/INDIRECT FLUORESCENT
- 2 X 4 RECESSED FLUORESCENT
- SUSPENDED FLUORESCENT
- SURFACE FLUORESCENT
- OPEN STRIP FLUORESCENT
- RECESSED DOWNLIGHT
- WALL MOUNTED FIXTURE (REFER TO EXT ELEV FOR MOUNTING HT)
- EXHAUST FAN
- SUPPLY REGISTER
- RETURN REGISTER

REFLECTED CEILING PLAN

SCALE: 1/4" = 1' - 0"

REV	DATE	BY	DESCRIPTION

DESIGNED KH
DRAWN IW
CHECKED FFG
DATE SEPTEMBER 2013

LICENSED ARCHITECT STEVEN D. PULTS C-8611 REN. 06-30-15 STATE OF CALIFORNIA

PULTS Steven D. Pults, AIA & Associates, LLP

carollo

SAN LUIS OBISPO COUNTY

SAN LUIS OBISPO COUNTY

LOS OSOS WATER RECYCLING FACILITY PROJECT

ARCHITECTURAL
ADMINISTRATION BUILDING
REFLECTED CEILING PLAN

VERIFY SCALES
BAR IS ONE INCH ON ORIGINAL DRAWING
0 1"
IF NOT ONE INCH ON THIS SHEET, ADJUST SCALES ACCORDINGLY

JOB NO. 8930A.11
DRAWING NO. 05AA03
SHEET NO. XXX OF XXX

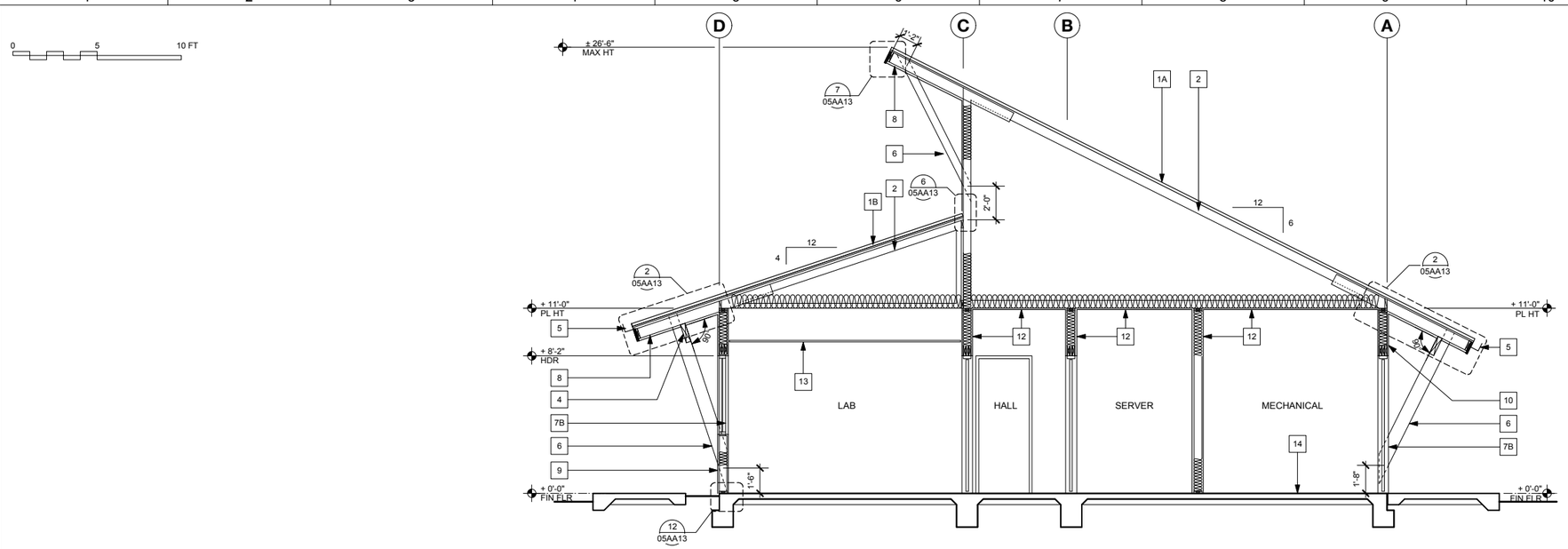

1 **SECTION A**

SCALE: 1/4" = 1' - 0"

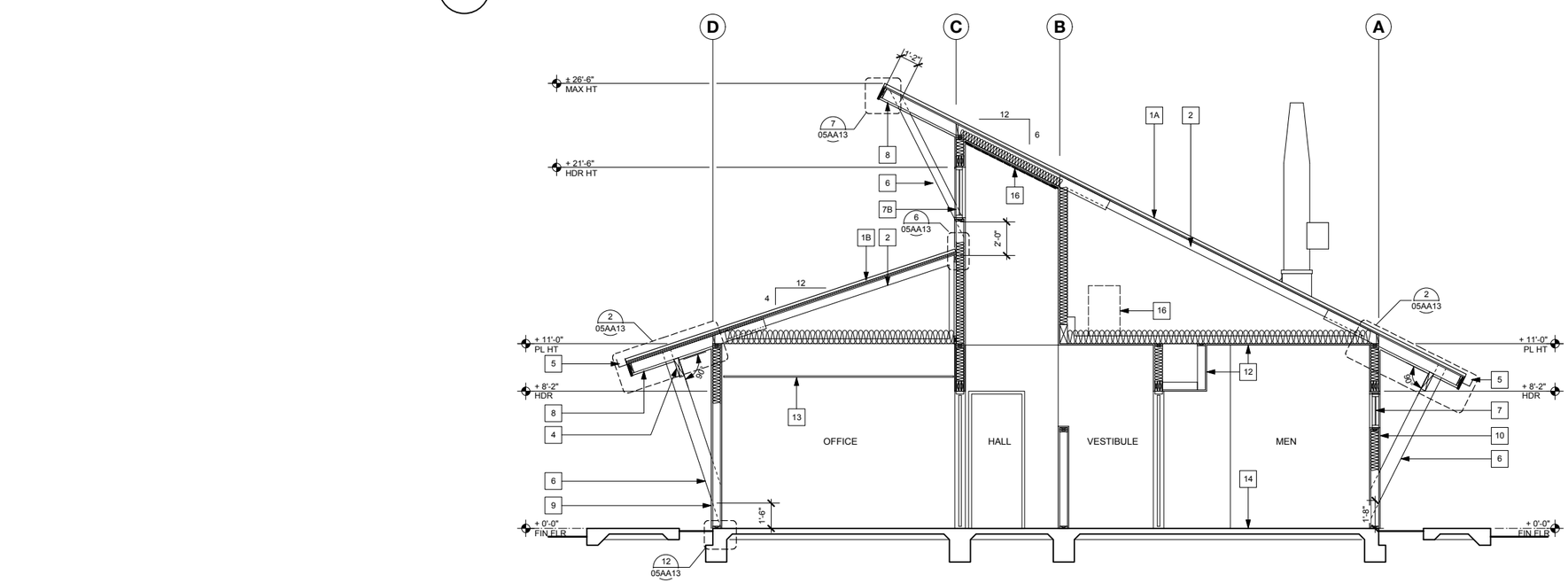

2 **SECTION B**

SCALE: 1/4" = 1' - 0"

BUILDING SECTION REFERENCE NOTES

1. METAL ROOFING
   A. VENTED ROOF
   B. NON-VENTED ROOF
2. WOOD ROOF TRUSSES. REFER TO STRUCTURAL
3. WOOD ROOF FRAMING. REFER TO STRUCTURAL
4. WOOD BEAM. REFER TO STRUCTURAL
5. GUTTER
6. WOOD OUTRIGGERS. REFER TO STRUCTURAL
7. WINDOW
   A: ALUMINUM STOREFRONT, REFER TO 05AA10
   B: WINDOW PER SCHEDULE, REFER TO 05AA09
8. 2X6 T & G
9. EXTERIOR STUCCO
10. FIBER CEMENT LAP SIDING
11. WOOD STUD WALLS. REFER TO STRUCTURAL
12. 5/8" GYPSUM BOARD
13. SUSPENDED T-BAR ACOUSTIC CEILING
14. CONCRETE SLAB. REFER TO STRUCTURAL
15. LINEAR OPEN STYLE, PANELIZED CEILING, BY RULON INT'L OR EQUAL
16. FAU
17. BRACKET. POWDERCOAT TO MATCH COLOR OF STOREFRONT & WINDOW TRIM

SECTION NOTES

1. **BUILDING WEATHERPROOF BARRIER**
   DuPont™ Tyvek® StuccoWrap® or approved equal
2. **SELF ADHESIVE FLASHING**
   DuPont™ StraightFlash™ or approved equal

REV	DATE	BY	DESCRIPTION

DESIGNED KH
DRAWN IW
CHECKED FFG
DATE SEPTEMBER 2013

LICENSED ARCHITECT STEVEN D. PULTS LICENSE NO. C-8611 EXP. 06-30-15 STATE OF CALIFORNIA

PULTS Steven D. Pults, AIA & Associates, LLP

carollo

SAN LUIS OBISPO COUNTY

SAN LUIS OBISPO COUNTY

LOS OSOS WATER RECYCLING FACILITY PROJECT

ARCHITECTURAL
ADMINISTRATION BUILDING
ROOF PLAN / BUILDING SECTIONS

VERIFY SCALES
BAR IS ONE INCH ON ORIGINAL DRAWING
0 1"
IF NOT ONE INCH ON THIS SHEET, ADJUST SCALES ACCORDINGLY

JOB NO. 8930A.11
DRAWING NO. 05AA04
SHEET NO. XXX OF XXX

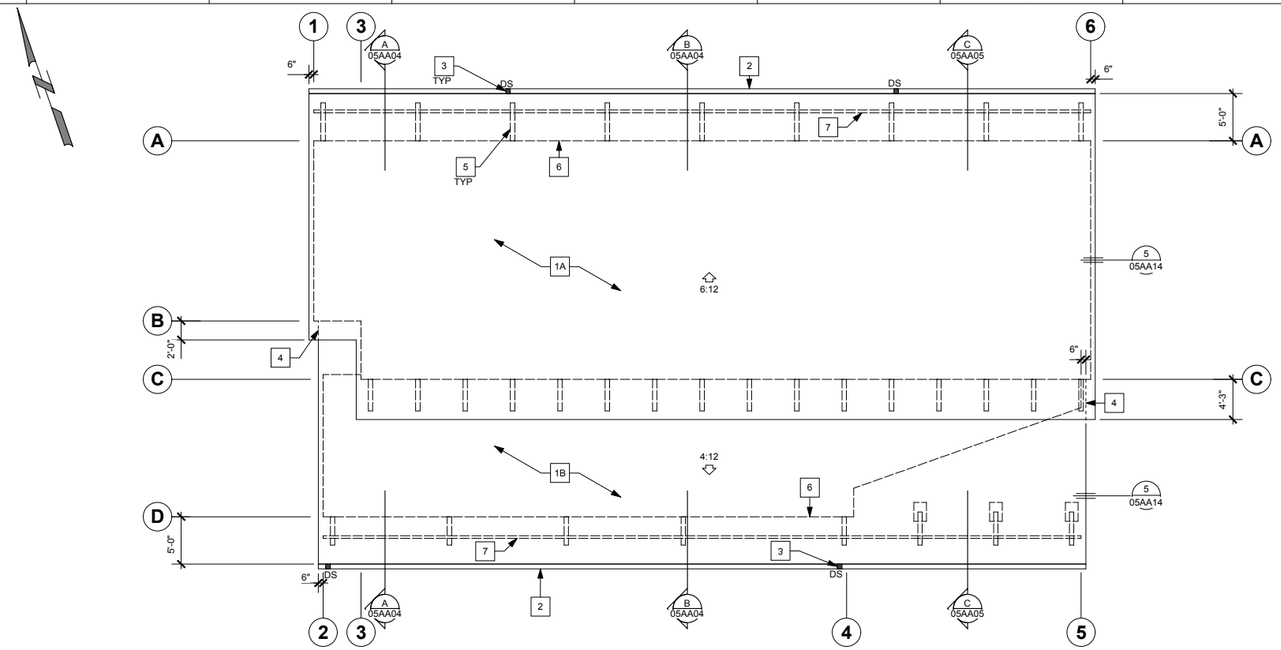

1 ROOF PLAN

SCALE: 1/8" = 1' - 0"

0 5 10 FT

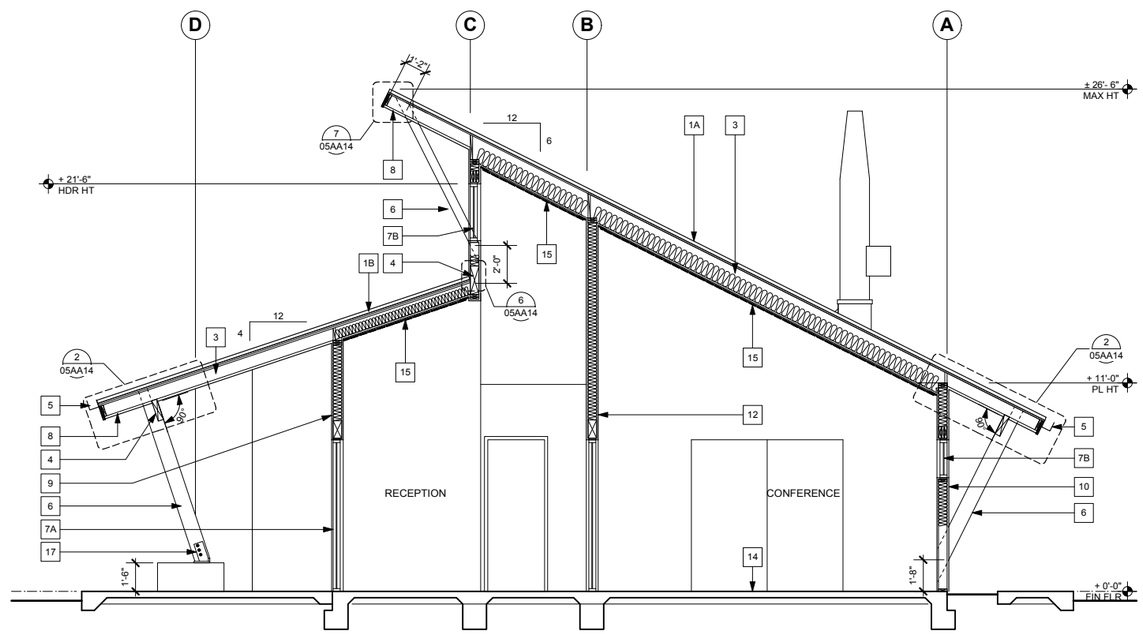

2 SECTION C

SCALE: 1/4" = 1' - 0"

0 5 10 FT

ROOF REFERENCE NOTES

1. METAL ROOFING
   A. VENTED ROOF
   B. NON-VENTED ROOF
2. 6" WIDE GUTTER
3. DOWNSPOUT
4. LINE OF ROOF BELOW
5. LINE OF OUTRIGGER BELOW
6. LINE OF BUILDING BELOW
7. LINE OF BEAM BELOW

ROOF NOTES

1. **METAL ROOFING**
   24ga 16" flat-pan, vertical standing seam, metal roof panel. Roof shall be installed with applied lap sealant per roof manuf requirements. Roof material shall be Metal Sales GalvAlum or equal
   Corrosion protection shall be AZ50 per ASTM A 792 All fasteners shall be galvanized.
   COLOR: Acrylic coated Galvalume or equivalent
   Non-vented roof shall follow the provisions of IRC Section R806.4 where batt insulation shall be installed directly below the structural sheathing and minimum R-5 rigid board insulation shall be installed directly above the structural sheathing.
2. **FLASHING**
   All flashing shall be galvanized sheet metal conforming to ASTM B370.
   min gauge: coping = 20 oz
   base = 16 oz
   counter = 16 oz
   valley = 16 oz
3. **GUTTERS & DOWNSPOUTS**
   galvanized, painted gutters, 6"ø, 20 oz, shape per SMACNA Fig 1-3A. COLOR:
   Aluminum downspouts, 3" Ø, 06 oz, shape per SMACNA Fig 1-32A.
   Provide wire mesh screens over gutters to prevent accumulation of debris in gutters.
4. **SOFFIT VENTS**
   aluminum, continuous Flush Edge Vent by Stockton Products or approved equal. 4" x 1 3/8", greater than or equal to 6.28" per linear foot vent area.

ATTIC VENTILATION REQUIREMENTS

LIVING:

ATTIC AREA:		=	2,037 SF
REQUIRED:	$\frac{2{,}033 \times 144}{300}$	=	976 SI
PROVIDED:	(160') 4" CONT. VENT @ 6.28 SI / FT	=	1,005 SI
	TOTAL PROVIDED:		1,005 SI

BUILDING SECTION REFERENCE NOTES

1. METAL ROOFING
   A. VENTED ROOF
   B. NON-VENTED ROOF
2. WOOD ROOF TRUSSES. REFER TO STRUCTURAL
3. WOOD ROOF FRAMING. REFER TO STRUCTURAL
4. WOOD BEAM. REFER TO STRUCTURAL
5. GUTTER
6. WOOD OUTRIGGERS. REFER TO STRUCTURAL
7. WINDOW
   A: ALUMINUM STOREFRONT, REFER TO 05AA10
   B: WINDOW PER SCHEDULE, REFER TO 05AA09
8. 2X6 T & G
9. EXTERIOR STUCCO
10. FIBER CEMENT LAP SIDING
11. WOOD STUD WALLS. REFER TO STRUCTURAL
12. 5/8" GYPSUM BOARD
13. SUSPENDED T-BAR ACOUSTIC CEILING
14. CONCRETE SLAB. REFER TO STRUCTURAL
15. LINEAR OPEN STYLE, PANELIZED CEILING, BY RULON INT'L OR EQUAL
16. FAU
17. BRACKET. POWDERCOAT TO MATCH COLOR OF STOREFRONT & WINDOW TRIM

SECTION NOTES

1. **BUILDING WEATHERPROOF BARRIER**
   DuPont™ Tyvek® StuccoWrap® or approved equal
2. **SELF ADHESIVE FLASHING**
   DuPont™ StraightFlash™ or approved equal

REV	DATE	BY	DESCRIPTION

DESIGNED KH
DRAWN IW
CHECKED FFG
DATE SEPTEMBER 2013

LICENSED ARCHITECT STEVEN D. PULTS NO. 8671 REN. 06-30-15 STATE OF CALIFORNIA

PULTS Steven D. Pults, AIA & Associates, LLP

carollo®

COUNTY OF SAN LUIS OBISPO CALIFORNIA

SAN LUIS OBISPO COUNTY

SAN LUIS OBISPO COUNTY

LOS OSOS WATER RECYCLING FACILITY PROJECT

ARCHITECTURAL
ADMINISTRATION BUILDING
ROOF PLAN / BUILDING SECTIONS

VERIFY SCALES
BAR IS ONE INCH ON ORIGINAL DRAWING
0 1"
IF NOT ONE INCH ON THIS SHEET, ADJUST SCALES ACCORDINGLY

JOB NO. 8930A.11
DRAWING NO. 05AA05
SHEET NO. XXX OF XXX

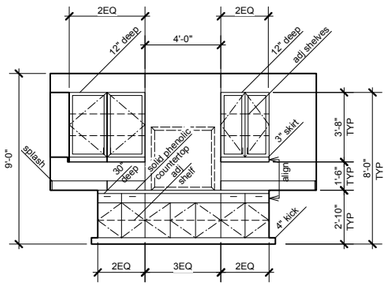

EAST

LAB 105

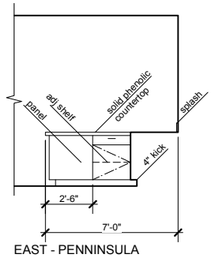

EAST - PENNINSULA

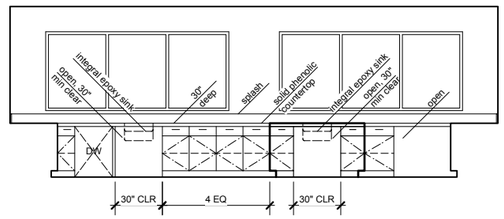

SOUTH

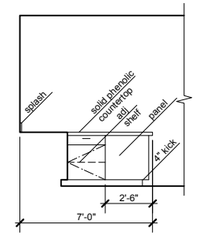

WEST - PENNINSULA

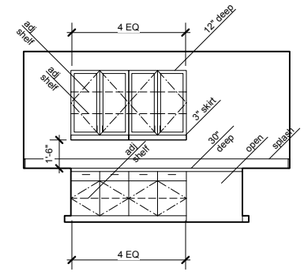

WEST

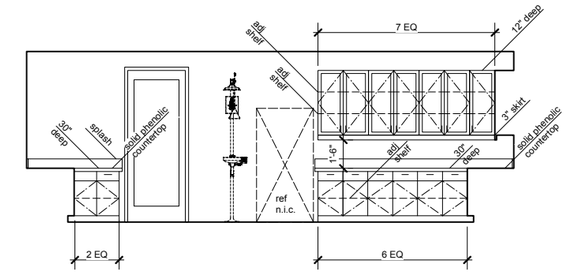

NORTH

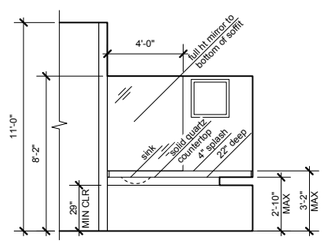

NORTH

WOMEN 113

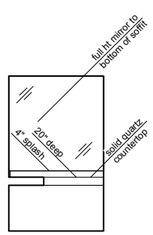

EAST

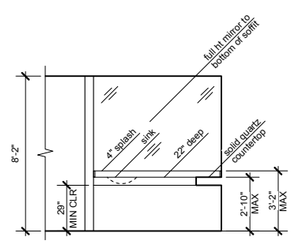

SOUTH

MEN 116

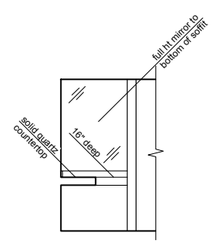

WEST

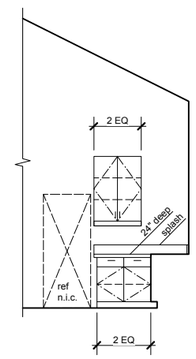

WEST

BREAK 119

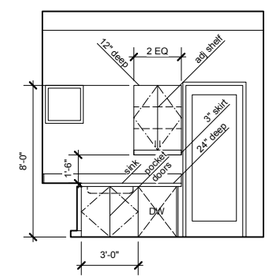

NORTH

CABINET NOTES

1. Field verify all necessary dimensions prior to fabrication.
2. All cabinet construction shall conform to W.I.C. Custom Grade.
3. Verify clearance and installation requirements for all appliances and under cabinet units, prior to fabrication.
2. All open shelves shall be laminated plastic.
3. Upper cabinets shall have two rows of adjustable shelves and hinged doors, U.N.O.
4. Base cabinets shall have one row of adjustable shelves and hinged doors, U.N.O.
5. Shelving units shall be a minimum of 3/4", white melamine. Cover exposed edges with plastic laminate.
6. All countertops shall have a back and side splash, U.N.O.
7. A 4" toe space shall be provided at all base cabinets.
8. All drawers shall have full-extension guides, Blum heavy duty.
9. All hinges shall be fully concealed.
10. Contractor shall submit shop drawings for all counters & cabinet work for approval prior to fabrication. Submit to Architect.
11. Provide 2" minimum countertop grommets at desk locations. Verify final location with tenant.
12. In the open position, fold-back pocket doors shown, shall provide 30" minimum clear width undercounter knee space for ADA access. Provide integral toe kick with the doors for clear floor access. Undercut toe kick to provide 1/4" minimum clear to finish floor material.
13. Se sheet 05AA11 for mounting heights and ADA clearances

1 CABINET ELEVATIONS • ADMINISTRATION BUILDING

SCALE: 1/4" = 1' - 0"

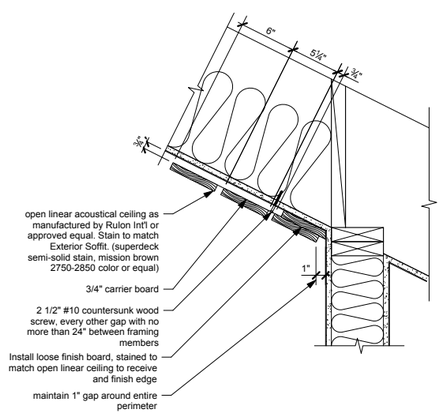

2 NOT USED

SCALE:

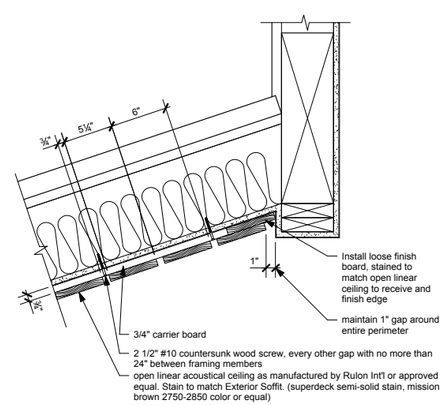

3 WOOD CEILING @ WALL

SCALE: 1 1/2" = 1' - 0"

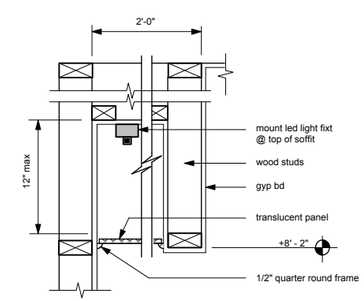

4 WOOD CEILING @ BEAM

SCALE: 1 1/2" = 1' - 0"

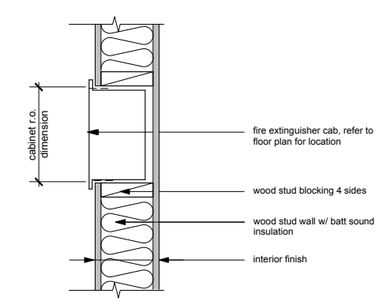

5 LIGHT SOFFIT

SCALE: 1 1/2" = 1' - 0"

6 FIRE EXTINGUISHER CABINET

SCALE:

REV	DATE	BY	DESCRIPTION

DESIGNED KH
DRAWN IW
CHECKED FFG
DATE SEPTEMBER 2013

LICENSED ARCHITECT STEVEN D. PULTS No. C-8611 REN. 06-30-15 STATE OF CALIFORNIA

PULTS Steven D. Pults, AIA & Associates, LLP

carollo

SAN LUIS OBISPO COUNTY

SAN LUIS OBISPO COUNTY

LOS OSOS WATER RECYCLING FACILITY PROJECT

ARCHITECTURAL

ADMINISTRATION BUILDING
CABINET ELEVATIONS

VERIFY SCALES
BAR IS ONE INCH ON ORIGINAL DRAWING
0 1"
IF NOT ONE INCH ON THIS SHEET, ADJUST SCALES ACCORDINGLY

JOB NO. 8930A.11
DRAWING NO. 05AA06
SHEET NO. XXX OF XXX

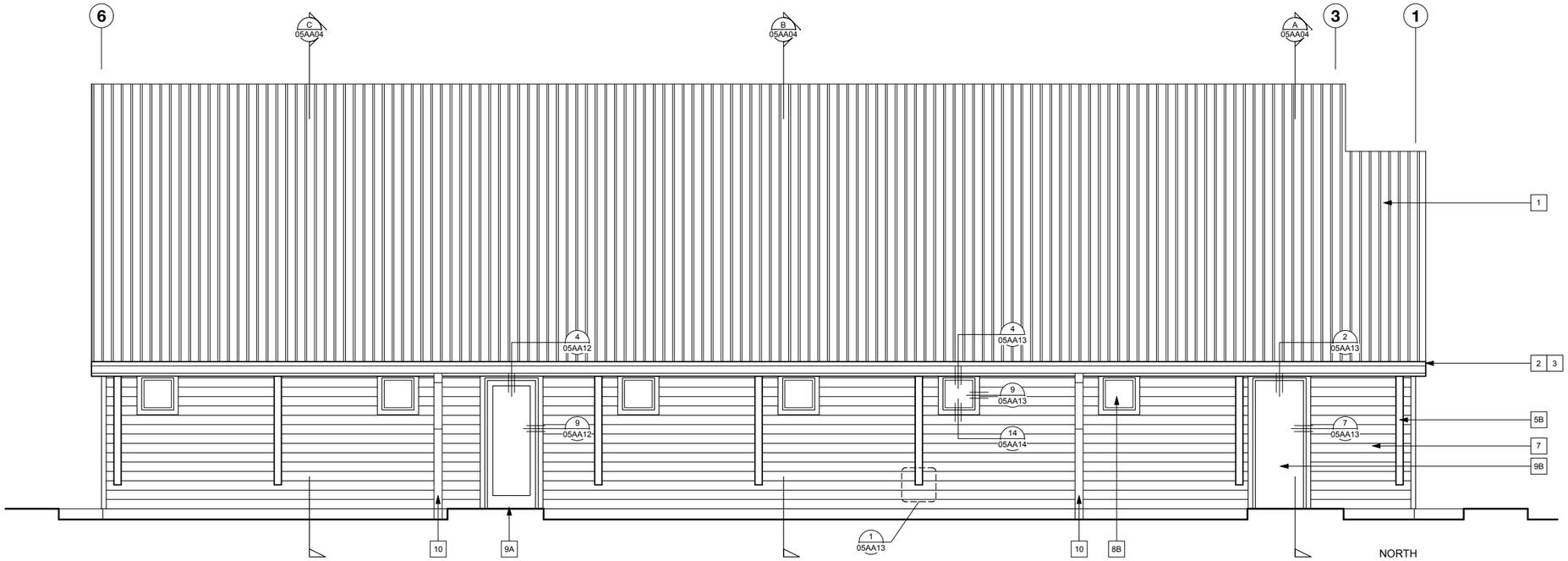

BUILDING ELEVATION REFERENCE NOTES

1. STANDING SEAM METAL ROOFING,
   (METAL SALES ACRYLIC COATED GALVALUME COLOR OR EQUAL)
2. 2 X WOOD FASCIA BOARD,
   (SUPERDECK SEMI-SOLID STAIN, MISSION BROWN 2750-2850 COLOR OR EQUAL)
3. GUTTER, (COLOR TO MATCH ROOFING)
4. EXPOSED WOOD T&G, UNDERSIDE OF EAVES, TYP
   (SUPERDECK SEMI-SOLID STAIN, MISSION BROWN 2750-2850 COLOR OR EQUAL)
5. WOOD OUTRIGGERS,
   (SUPERDECK SEMI-SOLID STAIN, MISSION BROWN 2750-2850 COLOR OR EQUAL)
   REFER TO STRUCTURAL SHEETS FOR ADDITIONAL INFORMATION
   A. 6 X 6
   B. 6 X 10
   C. 6 X 10 W/ CONCRETE PEDESTAL BASE
6. EXTERIOR PLASTER, SMOOTH FINISH
   (BEHR PEANUT BUTTER 270F-4 OR EQUAL COLOR)
7. FIBER CEMENT LAP SIDING
   (SUPERDECK SEMI-SOLID STAIN, MISSION BROWN 2750-2850 COLOR OR EQUAL)
8. WINDOW
   A: ALUMINUM STOREFRONT, REFER TO 005AA09
   (KAWNEER SMOKED GRAY COLOR OR EQUAL)
   B: WINDOW PER SCHEDULE, REFER TO 05AA10
   (SMOKED GRAY COLOR TO MATCH STOREFRONT)
9. WALK DOOR
   A. ALUMINUM STOREFRONT
   (KAWNEER SMOKED GRAY COLOR OR EQUAL)
   B. HOLLOW METAL
   (SMOKED GRAY COLOR TO MATCH STOREFRONT)
10. DOWNSPOUT, MOUNTED TO OUTRIGGER, PAINT TO MATCH ADJACENT SURFACE
11. BASE SCREED
12. VENT, REFER TO MECHANICAL SHEETS FOR INFORMATION NOT SHOWN
    (COLOR TO MATCH ROOFING)
13. EXPANSION JOINT
14. EXPANSION JOINT BEYOND, SHOWN DASHED

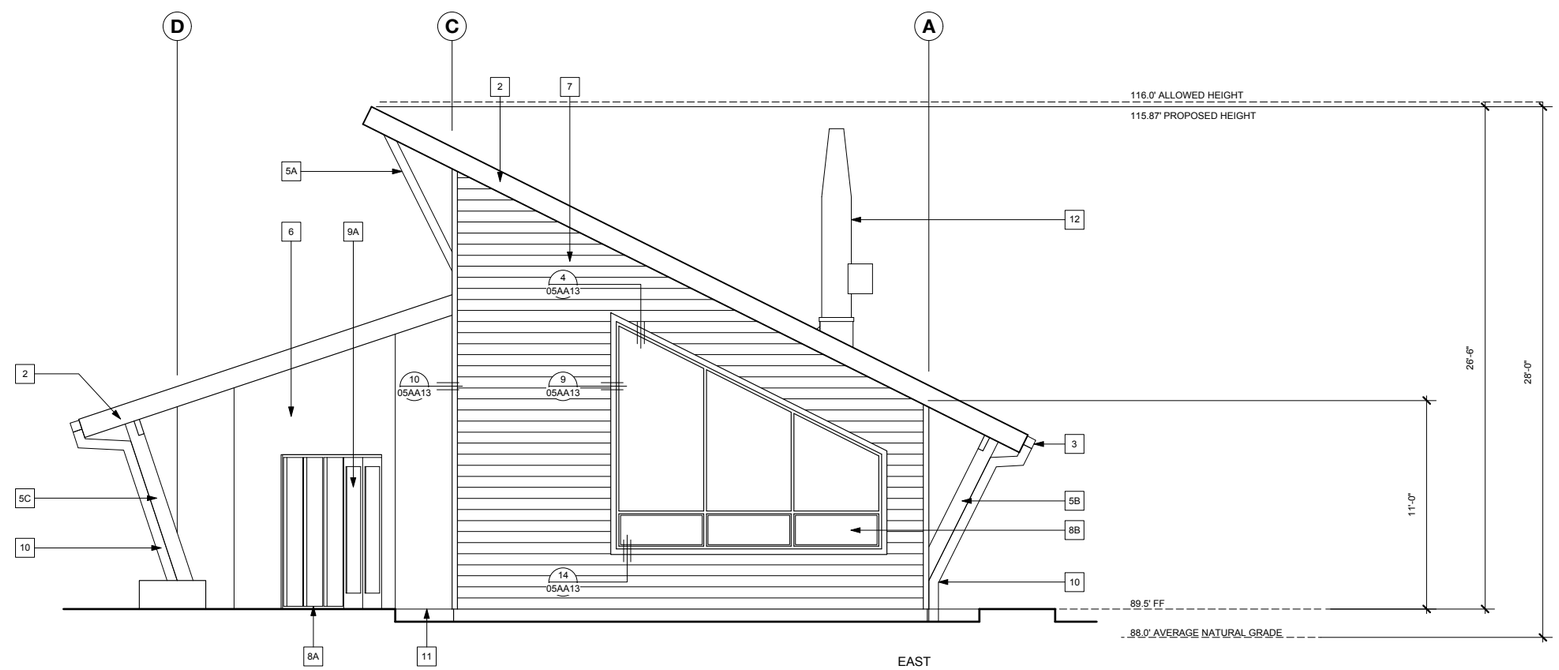

EXTERIOR ELEVATIONS

SCALE: 1/4" = 1' - 0"
0 4 8 FT

REV	DATE	BY	DESCRIPTION

DESIGNED KH
DRAWN IW
CHECKED FFG
DATE SEPTEMBER 2013

LICENSED ARCHITECT STEVEN D. PULTS No. 8611 EXP. 06-30-15 STATE OF CALIFORNIA

PULTS Steven D. Pults, AIA & Associates, LLP

carollo

SAN LUIS OBISPO COUNTY

SAN LUIS OBISPO COUNTY

LOS OSOS WATER RECYCLING FACILITY PROJECT

ARCHITECTURAL
ADMINISTRATION BUILDING
EXTERIOR ELEVATIONS

VERIFY SCALES
BAR IS ONE INCH ON ORIGINAL DRAWING
0 1"
IF NOT ONE INCH ON THIS SHEET, ADJUST SCALES ACCORDINGLY

JOB NO. 8930A.11
DRAWING NO. 05AA07
SHEET NO. XXX OF XXX

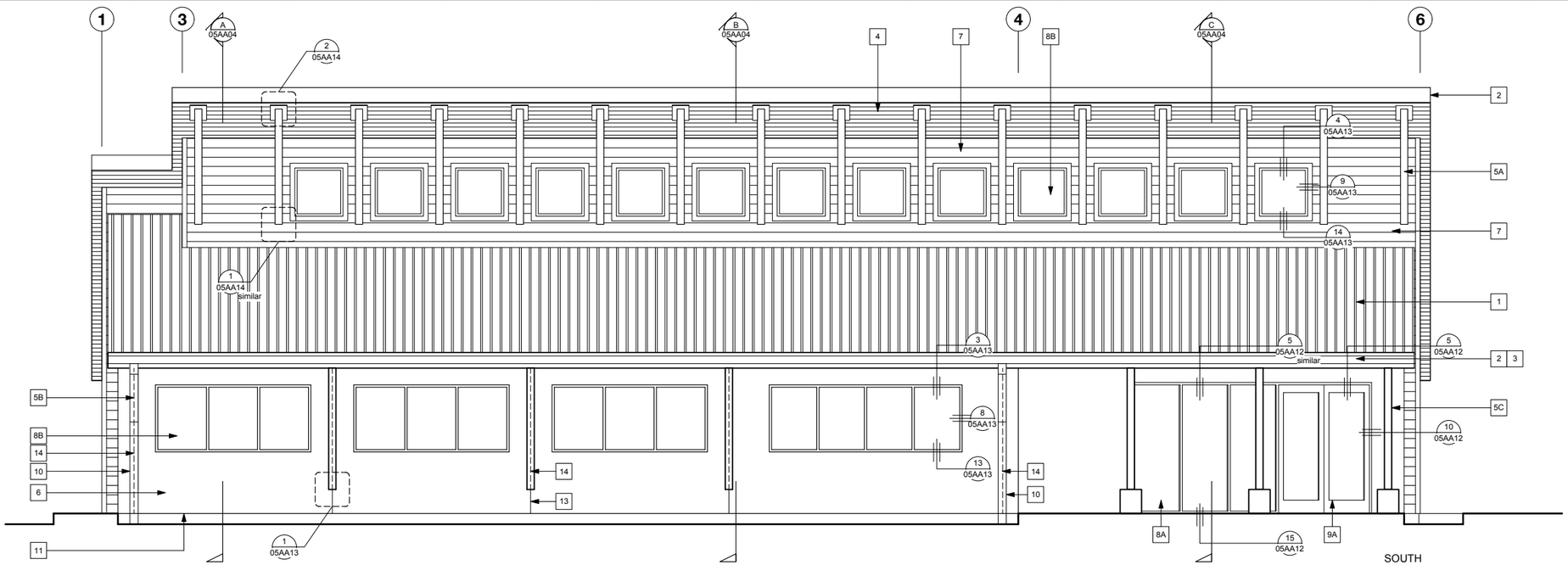

BUILDING ELEVATION REFERENCE NOTES

1. STANDING SEAM METAL ROOFING,
   (METAL SALES ACRYLIC COATED GALVALUME COLOR OR EQUAL)
2. 2 X WOOD FASCIA BOARD,
   (SUPERDECK SEMI-SOLID STAIN, MISSION BROWN 2750-2850 COLOR OR EQUAL)
3. GUTTER, (COLOR TO MATCH ROOFING)
4. EXPOSED WOOD T&G, UNDERSIDE OF EAVES, TYP
   (SUPERDECK SEMI-SOLID STAIN, MISSION BROWN 2750-2850 COLOR OR EQUAL)
5. WOOD OUTRIGGERS,
   (SUPERDECK SEMI-SOLID STAIN, MISSION BROWN 2750-2850 COLOR OR EQUAL)
   REFER TO STRUCTURAL SHEETS FOR ADDITIONAL INFORMATION
   A. 6 X 6
   B. 6 X 10
   C. 6 X 10 W/ CONCRETE PEDESTAL BASE
6. EXTERIOR PLASTER, SMOOTH FINISH
   (BEHR PEANUT BUTTER 270F-4 OR EQUAL COLOR)
7. FIBER CEMENT LAP SIDING
   (SUPERDECK SEMI-SOLID STAIN, MISSION BROWN 2750-2850 COLOR OR EQUAL)
8. WINDOW
   A: ALUMINUM STOREFRONT, REFER TO 005AA09
   (KAWNEER SMOKED GRAY COLOR OR EQUAL)
   B: WINDOW PER SCHEDULE, REFER TO 05AA10
   (SMOKED GRAY COLOR TO MATCH STOREFRONT)
9. WALK DOOR
   A. ALUMINUM STOREFRONT
   (KAWNEER SMOKED GRAY COLOR OR EQUAL)
   B. HOLLOW METAL
   (SMOKED GRAY COLOR TO MATCH STOREFRONT)
10. DOWNSPOUT, MOUNTED TO OUTRIGGER, PAINT TO MATCH ADJACENT SURFACE
11. BASE SCREED
12. VENT, REFER TO MECHANICAL SHEETS FOR INFORMATION NOT SHOWN
    (COLOR TO MATCH ROOFING)
13. EXPANSION JOINT
14. EXPANSION JOINT BEYOND, SHOWN DASHED

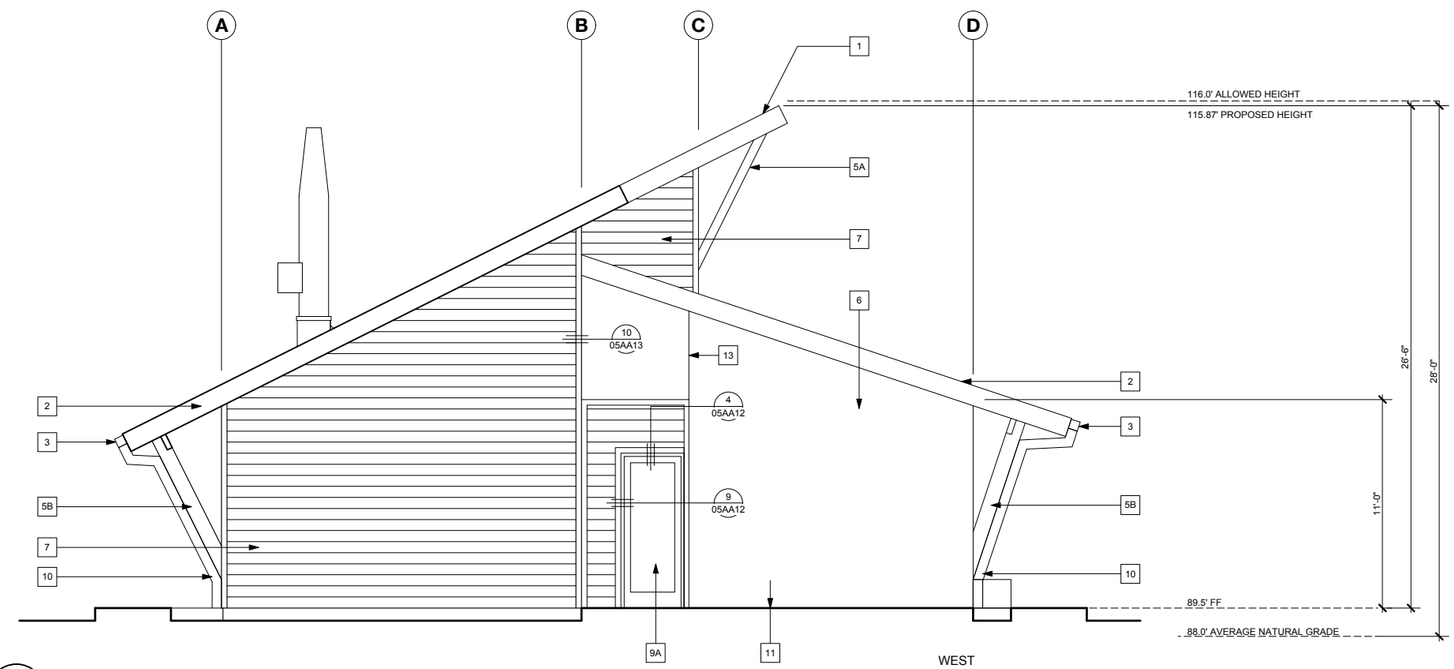

EXTERIOR ELEVATIONS

SCALE: 1/4" = 1' - 0"
0 4 8 FT

REV	DATE	BY	DESCRIPTION

DESIGNED KH
DRAWN IW
CHECKED FFG
DATE SEPTEMBER 2013

LICENSED ARCHITECT STEVEN D. PULTS NPWS 8611 REN. 06-30-15 STATE OF CALIFORNIA

PULTS Steven D. Pults, AIA & Associates, LLP

carollo

SAN LUIS OBISPO COUNTY

SAN LUIS OBISPO COUNTY

LOS OSOS WATER RECYCLING FACILITY PROJECT

ARCHITECTURAL
ADMINISTRATION BUILDING
EXTERIOR ELEVATIONS

VERIFY SCALES
BAR IS ONE INCH ON ORIGINAL DRAWING
0 1"
IF NOT ONE INCH ON THIS SHEET, ADJUST SCALES ACCORDINGLY

JOB NO. 8930A.11
DRAWING NO. 05AA08
SHEET NO. XXX OF XXX

DOOR TYPES

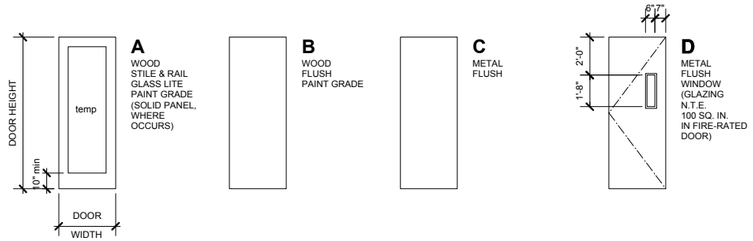

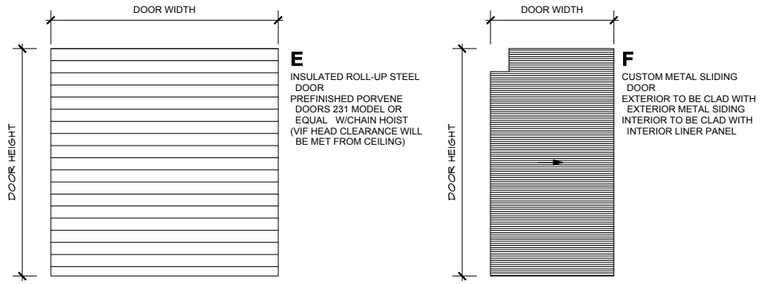

DOOR FRAME TYPES

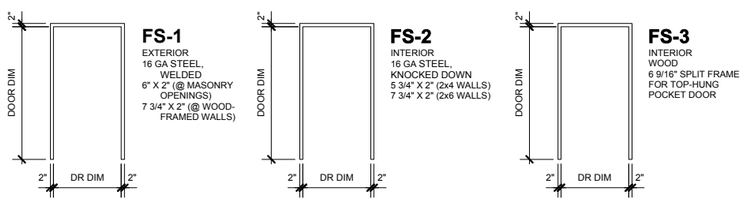

ALUMINUM FRAME TYPES

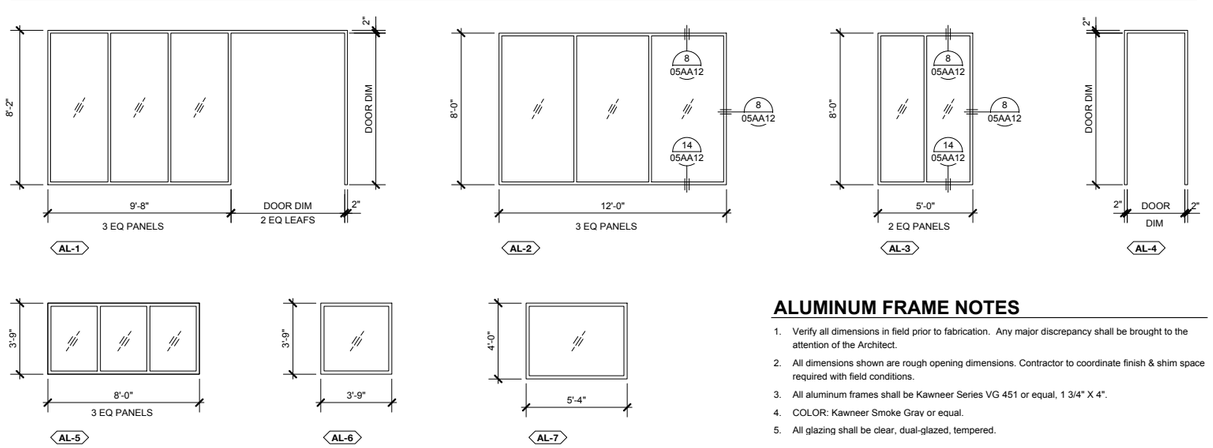

ALUMINUM FRAME NOTES

1. Verify all dimensions in field prior to fabrication. Any major discrepancy shall be brought to the attention of the Architect.
2. All dimensions shown are rough opening dimensions. Contractor to coordinate finish & shim space required with field conditions.
3. All aluminum frames shall be Kawneer Series VG 451 or equal, 1 3/4" X 4".
4. COLOR: Kawneer Smoke Gray or equal.
5. All glazing shall be clear, dual-glazed, tempered.

DOOR SCHEDULE

DOOR NO	DOOR TYPE	FRAME TYPE	DIMENSION WIDTH	DIMENSION HEIGHT	DIMENSION THK	LOCKSET	NAMEPLATE	KEY GROUP	REMARKS
ADMINISTRATION BUILDING									
1	A	AL-1	PR 3' - 0"	8' - 0"	1 3/4	L7.1		GENERAL ENTRY	W/CLOSER
2	A	AL-4	3' - 0"	8' - 0"	1 3/4	L5		GENERAL ENTRY	W/CLOSER
3	C	FS-1	3' - 0"	8' - 0"	1 3/4	L4.1		GENERAL ENTRY	
4	A	AL-4	3' - 0"	8' - 0"	1 3/4	L5		GENERAL ENTRY	W/CLOSER
5	A	FS-2	3' - 0"	8' - 0"	1 3/4	L3		GENERAL ENTRY	
6	A	FS-2	3' - 0"	8' - 0"	1 3/4	L3		GENERAL ENTRY	
7	A	FS-2	3' - 0"	8' - 0"	1 3/4	L3		GENERAL ENTRY	
8	B	FS-2	3' - 0"	8' - 0"	1 3/4	L4.1		SECURED AREAS	
9	B	FS-2	PR 2' - 0"	8' - 0"	1 3/4	L7.3		-	W/BALL CATCH LATCH
10	B	FS-2	3' - 0"	8' - 0"	1 3/4	L1	WOMEN	-	W/CLOSER, KICK,& PLATE
11	B	FS-2	3' - 0"	8' - 0"	1 3/4	L1	MEN	-	W/CLOSER, KICK,& PLATE
12	A	FS-2	3' - 0"	8' - 0"	1 3/4	L3		-	W/CLOSER
13	A	FS-2	3' - 0"	8' - 0"	1 3/4	L3		-	
14	B	FS-3	PR 4' - 0"	8' - 0"	1 3/4	L7		-	TOP-HUNG POCKET DOOR
MAINTENANCE BUILDING									
1	F		PR 7' - 0"	12' - 8"	2			-	SLIDING DOOR W/ D HANDLES AND HOOK&EYE LATCHES
2	E	-	12' - 8"	12' - 0"	PER MANUFACTURER SPECIFICATIONS				INSULATED, MOTORIZED
3	D	FS-1	3' - 0"	8' - 0"	1 3/4	L5		GENERAL ENTRY	
4	E	-	12' - 8"	12' - 0"	PER MANUFACTURER SPECIFICATIONS				INSULATED, MOTORIZED
5	D	FS-1	3' - 0"	8' - 0"	1 3/4	L5		GENERAL ENTRY	
6	D	FS-2	3' - 0"	8' - 0"	1 3/4	L1		GENERAL ENTRY	
7	C	FS-2	PR 1' - 8"	8' - 0"	1 3/4	L1		GENERAL ENTRY	W/BALL CATCH LATCH
8	C	FS-2	3' - 0"	8' - 0"	1 3/4	L1	UNISEX	GENERAL ENTRY	
DEWATERING BUILDING									
1	E	-	12' - 0"	12' - 0"	PER MANUFACTURER SPECIFICATIONS				INSULATED, MOTORIZED
2	D	FS-1	PR 3' - 0"	8' - 0"	1 3/4	L5		GENERAL ENTRY	
3	D	FS-1	PR 3' - 0"	8' - 0"	1 3/4	L4.1		SECURED AREAS	
4	D	FS-1	3' - 0"	7' - 0"	1 3/4	L4.1		SECURED AREAS	
5	D	FS-1	3' - 0"	7' - 0"	1 3/4	L4.1		SECURED AREAS	
6	E	-	12' - 0"	8' - 0"	PER MANUFACTURER SPECIFICATIONS				INSULATED, MOTORIZED
7	E	-	6' - 0"	8' - 0"	PER MANUFACTURER SPECIFICATIONS				INSULATED, MOTORIZED
8	D	FS-1	PR 3' - 0"	8' - 0"	1 3/4	L5		GENERAL ENTRY	
ELECTRICAL BUILDING									
1	E	-	10' - 0"	10' - 0"	PER MANUFACTURER SPECIFICATIONS				90 MIN RATED
2	D	FS-1	PR 4' - 0"	9' - 0"	1 3/4	L4.1		SECURED AREAS	90 MIN RATED W/CLOSER
3	D	FS-1	3' - 0"	7' - 0"	1 3/4	L5		GENERAL ENTRY	90 MIN RATED W/CLOSER
4	D	FS-1	3' - 0"	7' - 0"	1 3/4	L4.1		SECURED AREAS	90 MIN RATED W/CLOSER
5	D	FS-1	PR 4' - 0"	9' - 0"	1 3/4	L5		GENERAL ENTRY	90 MIN RATED W/CLOSER
6	D	FS-1	3' - 0"	7' - 0"	1 3/4	L5		GENERAL ENTRY	90 MIN RATED W/CLOSER
7	D	FS-1	PR 4' - 0"	9' - 0"	1 3/4	L5		GENERAL ENTRY	90 MIN RATED W/CLOSER
8	D	FS-1	PR 4' - 0"	9' - 0"	1 3/4	L4.1		SECURED AREAS	90 MIN RATED W/CLOSER
9	D	FS-1	3' - 0"	7' - 0"	1 3/4	L5		GENERAL ENTRY	90 MIN RATED W/CLOSER
10	D	FS-2	3' - 0"	7' - 0"	1 3/4	L5		GENERAL ENTRY	90 MIN RATED W/CLOSER
11	D	FS-2	3' - 0"	7' - 0"	1 3/4	L5		GENERAL ENTRY	90 MIN RATED W/CLOSER

DOOR NOTES

1. Locksets:
   L1..... Passage (ND10S)
   L2..... Privacy (ND40S)
   L3..... Office (ND50PD)
   L4..... Classroom (ND70PD)
   L4.1..... Storeroom (ND80PD)
   L5..... Interconnected Lockset
   L6..... Panic Bar
   L6.1..... Panic Bar w/ Separate Deadbolt
   L7..... Push Plate/Pull Handles
   L7.1..... Push Plate/Pull Handles w/ Separate Deadbolt
   L7.2..... Push Plate/Pull Plate & Handle
   L7.3..... Single Dummy Trim
   L8..... Automatic Flush Bolt

   All latchsets/locksets shall be lever type Schlage Sparta style, with 626 finish, function type per schedule. All hardware shall be centered between 30 and 44 inches high and operable from inside without the use of a key, special knowledge or effort, and shall be operable without tight grasping, tight pinching, or twisting of the wrist. Doors listed with existing hardware to remain shall be lever type and shall meet these conditions.
2. All doors shall be minimum 3'-0" wide by 6'-8" tall, uno. Hinged doors shall open to min 90º from its closed position, and shall have min 32" net clear width in that 90º position. At a pair of doors, at least one leaf shall have a min 32" net clear width when opened to an angle of 90º from its closed position.
3. Wood doors with new Push/Pull Handles shall be provided with stainless steel, brushed finish push/pull plates with rounded corners. Doors with kickplates shall be provided with 10" high x full door width stainless steel, brushed finish kickplates with rounded corners on both sides of doors.
4. Pocket door hardware shall be accessible for the disabled. Door shall have 'U' shaped handles, and door stops so that the handle will have 1 1/2" clearance when fully open. No hardware shall be used that requires tight grasping, tight pinching, or twisting of wrist to operate.
5. Panic Bars shall have concealed vertical rods that latch into door frame head and threshold. Activating device shall be centered between 30 and 44 inches high, with unlatching force not to exceed 15 pounds. Provide lever handleon opposite side of door, with operation similar to Lockset L4
6. Doors in pairs with automatic flush bolts (AFB) shall have no surface mounted hardware on the leaf having the AFB. Unlatching any leaf shall not require more than one operation.
7. Automatic closers: the maximum effort to operate doors cannot exceed 5 pounds for interior and exterior doors, and 15 pounds for required fire rated doors. Sweep period of the closer shall not be less than 3 seconds from an open position of 70 degrees to within 3" of the latch, measured to the leading edge of door. All existing closers shall be repaired or replaced to meet these requirements.
8. Floor or landing shall not be lower than 1/2" below top of door threshold. Changes from level shall not exceed 1/4" vertical. Changes in level between 1/4" and 1/2" shall be beveled with a max slope of 1 unit vertical to 2 units horizontal. Replace any existing thresholds that do not meet these requirements.
9. All new exterior doors shall have PEMKO 210APK shoes, 303 APK gasketing and aluminum thresholds. All exterior outswinging doors shall have Hager 810S rain cap.
10. All doors separating conditioned and non-conditioned spaces shall be weather-stripped or gasketed to effectively and reliably limit air infiltration. Adhesive foam type or felt weather-stripping is not acceptable.
11. All wood doors shall be of solid core construction, stain grade. Provide silencers in door frames.
12. All exterior sliding glass doors shall have safety glazing, locking latches, pull handles, weather stripping, and integral thresholds per manufacturer.
13. All rated doors shall be provided with automatic closers and smoke seals matching the rating of the door; PEMKO 303AS. Doors scheduled to be 'S' rated shall have smoke & draft control & shall have the letter 'S' on rating label.
14. Doors opening to Exit Enclosures shall be self closing. Doors shall be rated to show that the maximum transmitted temperature end point shall not exceed 450º F above ambient at the end of 30 minute of standard fire test exposure, per CBC 715.4.4
15. All doors shall have stops; HAGER 241F floor dome or HAGER 255S wall stop, per field condition. Door stops shall not be located in the path of travel or beyond 4" maximum from walls. Doors scheduled to have hold open shall be HAGER 270D with US26D finish.
16. Doors required by schedule shall have the following sign located adjacent to door in a readily visible location: the "International Symbol of Accessibility". Refer to Accessibility Signage Notes, Sht 05AA11 for additional requirements.
17. Doors required by schedule shall have the following sign in 1" high lettering on contrasting background over the door: "THIS DOOR TO REMAIN UNLOCKED WHEN BUILDING IS OCCUPIED"
18. Signage: Doors with name plates shall be provided with signs per detail 8/05AA11. Refer to Mounting Height Schedule on Sht 05AA11 for additional signage requirements at restrooms.

LOUVER SCHEDULE

SYM	SIZE WIDTH	SIZE HEIGHT	FRAME	TYPE	REMARKS
MAINTENANCE BUILDING					
L1	3' -9"	3' -9"	6"	STL	W/ MOUNTING FLANGE
DEWATERING BUILDING					
L1	1' -4"	1' -4"	6"	STL	W/ MOUNTING FLANGE
L2	2' -0"	2' -0"	6"	STL	W/ MOUNTING FLANGE
ELECTRICAL BUILDING					
L1	8' -0"	10' -0"	6"	STL	W/ MOUNTING FLANGE
L2	6' -8"	10' -0"	6"	STL	W/ MOUNTING FLANGE
L3	2' -0"	2' -0"	6"	STL	W/ MOUNTING FLANGE
L4	2' -0"	2' -8"	6"	STL	W/ MOUNTING FLANGE

REV	DATE	BY	DESCRIPTION

DESIGNED KH
DRAWN IW
CHECKED FFG
DATE SEPTEMBER 2013

LICENSED ARCHITECT STEVEN D. PULTS C-8611 REN. 06-30-15 STATE OF CALIFORNIA

PULTS Steven D. Pults, AIA & Associates, LLP

carollo

SAN LUIS OBISPO COUNTY

SAN LUIS OBISPO COUNTY
LOS OSOS WATER RECYCLING FACILITY PROJECT
ARCHITECTURAL
ADMINISTRATION BUILDING SCHEDULES

VERIFY SCALES
BAR IS ONE INCH ON ORIGINAL DRAWING
0 1"
IF NOT ONE INCH ON THIS SHEET, ADJUST SCALES ACCORDINGLY

JOB NO. 8930A.11
DRAWING NO. 05AA09
SHEET NO. XXX OF XXX

FINISH SCHEDULE

ROOM NAME	ROOM NO	FLR	BASE	WALLS NORTH	WALLS EAST	WALLS SOUTH	WALLS WEST	CLG	CLG HT	REMARKS
ADMINISTRATION BUILDING										
WAITING	101	STCONC	4RB	58GB	58GB	58GB	58GB	ACWD	VARIES	
RECEPTION	102	STCONC	4RB	58GB	58GB	58GB	58GB	ACWD	VARIES	
OFFICE	103	CAR	4RB	58GB	58GB	58GB	58GB	SC24	9' - 0"	
OFFICE	104	CAR	4RB	58GB	58GB	58GB	58GB	SC24	9' - 0"	
LAB-EAST	105	QT	CCT	58GB	58GB	58GB	58GB	SC24	9' - 0"	
LAB-WEST	106	QT	CCT	58GB	58GB	58GB	58GB	SC24	9' - 0"	
HALL	107	STCONC	4RB	58GB	58GB	58GB	58GB	ACWD	VARIES	
VESTIBULE	108	STCONC	4RB	58GB	58GB	58GB	58GB	58GB	11' - 0"	
MOP	109	STCONC	4RB	58GB	58GB	58GB	58GB	58GB	11' - 0"	
FOYER	110	STCONC	4RB	58GB	58GB	58GB	58GB	ACWD	11' - 0"	
SERVER	111	EPCONC	4RB	58GB	58GB	58GB	58GB	SC24	11' - 0"	
MECH/ELEC	112	CONC	4RB	58GB	58GB	58GB	58GB	58GB	11' - 0"	
WOMEN	113	CT	CCT	CTW	CTW	CTW	CTW	58MGB	11' - 0"	
WOMEN SHOWER	114	CT	CCT	CT	CT	CT	CT	58MGB	8' - 0"	
WOMEN LOCKER	115	CT	CCT	CTW	CTW	CTW	CTW	58MGB	11' - 0"	
MEN	116	CT	CCT	CTW	CTW	CTW	CTW	58MGB	11' - 0"	
MEN LOCKER	117	CT	CCT	CTW	CTW	CTW	CTW	58MGB	11' - 0"	
MEN SHOWER	118	CT	CCT	CT	CT	CT	CT	58MGB	8' - 0"	
BREAK	119	STCONC	4RB	58GB	58GB	58GB	58GB	58GB	VARIES	
CONFERENCE	120	CAR	4RB	58GB	58GB	58GB	58GB	58GB	VARIES	
MAINTENANCE BUILDING										
OFFICE	101	EPCONC	4RB	58GB	58GB	58GB	58GB	58GB	9' - 0"	
RESTROOM	102	EPCONC	4RB	58MGB	58MGB	58MGB	58MGB	58MGB	9' - 0"	
HALLWAY	103	EPCONC	4RB	58GB	58GB	58GB	58GB	58GB	9' - 0"	
CLOSET	104	EPCONC	4RB	58GB	58GB	58GB	58GB	58GB	9' - 0"	
MAINT. AREA	105	EPCONC	-	MLP	MLP	MLP	MLP	SSLNR	VARIES	
LOADING AREA	106	EPCONC	-	MLP	MLP	MLP	MLP	MLP	VARIES	
DEWATERING BUILDING										
DEWATERING	101	SCONC	-	CB	CB	CB	CB	EXFR	VARIES	
SIGNAL	102	EPCONC	-	CB	CB	CB	CB	FRCOAT	9' - 0"	
ELECTRICAL	103	SCONC	-	CB	CB	CB	CB	FRCOAT	9' - 0"	
ELECTRICAL BUILDING										
STORAGE-1	101	SCONC	-	CB	CB	CB	CB	FRCOAT	VARIES	
STORAGE-2	102	SCONC	-	CB	CB	CB	CB	FRCOAT	VARIES	
ELECTRICAL	13	SCONC	-	CB	CB	CB	CB	FRCOAT	VARIES	
SIGNAL	104	EPCONC	-	CB	CB	CB	CB	FRCOAT	VARIES	
FIRE PUMP	105	SCONC	-	CB	CB	CB	CB	FRCOAT	VARIES	
GENERATOR	106	SCONC	-	CB	CB	CB	CB	FRCOAT	VARIES	

MATERIAL KEY

FLOOR

CAR..... CARPET
CT..... CERAMIC TILE
QT..... QUARRY TILE
ST..... SLATE TILE
CONC..... CONCRETE
SCONC..... SEALED CONCRETE
STCONC..... STAINED CONCRETE
EPCONC..... EPOXY COATING OVER CONCRETE
PLYWD..... PLYWOOD
RSTR..... PRE-MANUFACTURED RUBBER STAIR TREAD & RISER
SR..... SHEET RUBBER
SV..... SHEET VINYL FLOORING
SVW..... WELDED SHEET VINYL
TRAFFIC..... WEATHERPROOF TRAFFIC SURFACE
VCT..... VINYL COMPOSITION TILE
SDVCT..... STATIC DISSIPATIVE VCT

BASE

4RB..... 4" RUBBER BASE
4RCB..... 4" RUBBER COVED BASE
4VB..... 4" VINYL BASE
4VCB..... 4" VINYL COVED BASE
6CT..... 6" CERAMIC TILE
CCT..... 6" COVED CERAMIC TILE
COVED..... 6" COVED SHEET VINYL
LP..... LAMINATED PLASTIC
MDF..... 3/4" X 6" MDF WITH 1/4 ROUND
MDO..... 3/4" X 6" MEDIUM DENSITY OVERLAY, EASE TOP EDGE
RTSS..... RUBBER TOPSET STAIR STRINGER
WD..... WOOD

CEILING

58GB..... 5/8" GYPSUM WALLBOARD
58GBX..... 5/8" TYPE 'X' GYPSUM WALLBOARD
58MGB..... 5/8" MOISTURE RESISTANT GYPSUM WALLBOARD
S8MGBX..... 5/8" TYPE 'X' MOISTURE RESISTANT GYPSUM WALLBOARD
PLAST..... EXTERIOR PLASTER
SC22..... 2 X 2 T-BAR SUSPENDED ACOUSTIC
SC24..... 2 X 4 T-BAR SUSPENDED ACOUSTIC
TG..... 1X6 T&G
ACWD..... ACOUSTIC WOOD SLAT SYSTEM
FRCOAT..... SPRAY-APPLIED FIRE-RESISTANT COATING
SSLNR..... DBL LAYER INSULATION SYSTEM W/ FABRIC LINER/ VAPOR BARRIER

WALLS

12GB..... 1/2" GYPSUM WALLBOARD
58GB..... 5/8" GYPSUM WALLBOARD
58GBX..... 5/8" TYPE 'X' GYPSUM WALLBOARD
58MGB..... 5/8" MOISTURE RESISTANT GYPSUM WALLBOARD
58MGBX..... 5/8" TYPE 'X' MOISTURE RESISTANT GYPSUM WALLBOARD
58GBRC..... 5/8" GYPSUM WALLBOARD OVER RESILIENT CHANNEL FURRING
58GBXRC..... 5/8" TYPE 'X' GYPSUM WALLBOARD OVER RESILIENT CHANNEL FURRING
58GBEC..... 5/8" GYPSUM WALLBOARD W/ EPOXY COATING
12PLY..... 1/2" PLYWOOD
58PLYW..... 5/8" PLYWOOD TO +8-0" W/ 5/8" GYPSUM WALLBOARD ABOVE
AWP..... ACOUSTICAL WALL PANEL OVER 5/8" GYPSUM WALLBOARD
CB..... CONCRETE BLOCK
CBGB..... CONC BLOCK TO +6'-8" WITH 5/8" GYPSUM WALLBOARD ABOVE
CL..... CHAIN LINK DIVIDER TO + 8' - 0"
CRWP..... CLEAN ROOM WALL PANEL
CT..... CERAMIC TILE
CTTS..... CERAMIC TILE, THICK SET
CTW..... CERAMIC TILE 4-0" HIGH WAINSCOT W/ 5/8" MOISTURE RESISTANT GYPSUM WALLBOARD ABOVE
CTWX..... CERAMIC TILE 4-0' HIGH WAINSCOT W/ 5/8" TYPE 'X' MOISTURE RESISTANT GYPSUM WALLBOARD ABV
FRP..... FIBERGLASS REINFORCED PLASTIC OVER 5/8" MOISTURE RESISTANT GYPSUM WALLBOARD
FRPW..... 4-0" HIGH FRP OVER AND WITH 5/8" MOISTURE RESISTANT GYPSUM WALLBOARD ABV
GLBK..... GLASS BLOCK
LGB..... LEAD LINED GYPSUM WALLBOARD, REFER TO LEAD SCHEDULE
PLAST..... EXTERIOR PLASTER
CBWP..... CONC BLOCK WAINSCOT TO +48" W/ INSULATED WALL PANEL ABOVE
WP..... INSULATED WALL PANEL
MLP..... METAL LINER PANEL

WINDOW SCHEDULE

SYM	SIZE WIDTH	SIZE HEIGHT	FRAME TYPE	OPERATION	REMARKS
ADMINISTRATION BUILDING					
A	4 @ 3' - 0"	3' - 11"	ALUM CLAD WOOD	XOOX CSMT	
B	3 @ 3' - 2 1/2"	3' - 11"	ALUM CLAD WOOD	XOX CSMT	
C	2' - 0"	1' - 11"	ALUM CLAD WOOD	AWNING	
D	3 @ 4' - 8"	1' - 11" *	ALUM CLAD WOOD	AWNING + FIXED	* SEE NOTE #1 FOR TRAPEZOID
E	3' - 0"	2' - 11"	ALUM CLAD WOOD	CSMT	* SEE NOTE #3
AL-1	9' - 8"	8' - 2"	1-3/4"x4". CENTER PANE	FIXED	* SEE NOTE #2
AL-2	12' - 0"	8' - 0"	1-3/4"x4". CENTER PANE	FIXED	
AL-3	5' - 0"	8' - 0"	1-3/4"x4". CENTER PANE	FIXED	
MAINTENANCE BUILDING					
AL-5	8' - 0"	3' - 9"	1-3/4"x4". CENTER PANE	FIXED	
AL-6	3' - 9"	3' - 9"	1-3/4"x4". CENTER PANE	FIXED	
ELECTRICAL BUILDING					
AL-7	5' - 4"	4' - 0"	1-3/4"x4". CENTER PANE	FIXED	90 MIN FIRE-RATED

WINDOW SCHEDULE NOTES

1. Match angle of top of trapezoid windows with angle of roof. Finalize window sizes after rough framing.
2. See Sheet 05AA09 for aluminum frame types.
3. Windows with head heights above 8'-0" shall have a wash mode, allowing exterior glazing to be cleaned from the interior of the building, as found on the Marvin Clad Ultimate Casement windows or approved equal

WINDOW TYPES

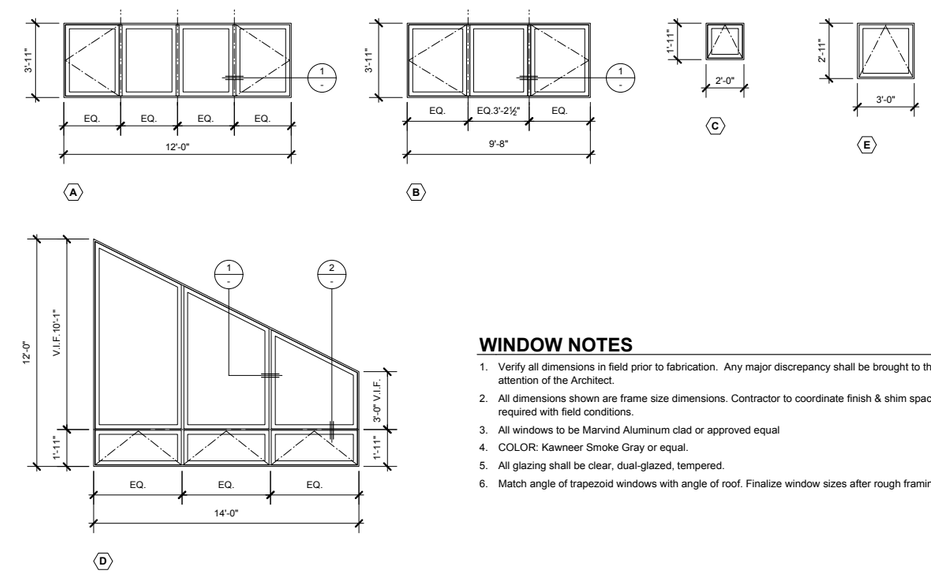

WINDOW NOTES

1. Verify all dimensions in field prior to fabrication. Any major discrepancy shall be brought to the attention of the Architect.
2. All dimensions shown are frame size dimensions. Contractor to coordinate finish & shim space required with field conditions.
3. All windows to be Marvind Aluminum clad or approved equal
4. COLOR: Kawneer Smoke Gray or equal.
5. All glazing shall be clear, dual-glazed, tempered.
6. Match angle of trapezoid windows with angle of roof. Finalize window sizes after rough framing.

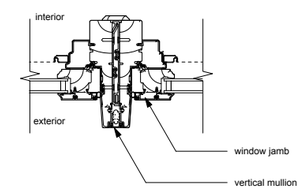

1 **TYP. VERTICAL MULLION**
SCALE: 3" = 1' - 0"

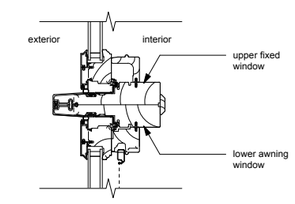

2 **TYP. HORIZONTAL MULLION**
SCALE: 3" = 1' - 0"

REV	DATE	BY	DESCRIPTION

DESIGNED KH
DRAWN IW
CHECKED FFG
DATE SEPTEMBER 2013

LICENSED ARCHITECT STEVEN D. PULTS C-8611 EXP. 06-30-15 STATE OF CALIFORNIA

PULTS Steven D. Pults, AIA & Associates, LLP

carollo

SAN LUIS OBISPO COUNTY

SAN LUIS OBISPO COUNTY
LOS OSOS WATER RECYCLING FACILITY PROJECT
ARCHITECTURAL
ADMINISTRATION BUILDING SCHEDULES

VERIFY SCALES
BAR IS ONE INCH ON ORIGINAL DRAWING
0 1"
IF NOT ONE INCH ON THIS SHEET, ADJUST SCALES ACCORDINGLY

JOB NO. 8930A.11
DRAWING NO. 05AA10
SHEET NO. XXX OF XXX

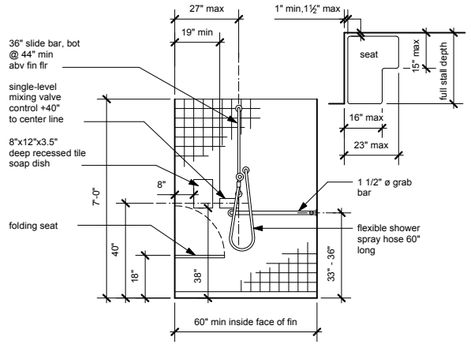

SHOWER NOTES

1. All dimensions are to finished materials.

2. Floor surface shall be of Carborundum or grit-faced tile material providing equivalent slip-resistance. The maximum allowable slope of the floor is 2% in any direction. Locate drain at center of shower.

3. Threshold shall be flush. Grate opening shall be 1/4" max & flush w/floor surface.

4. Provide a folding seat full depth of shower, to extend 23" max from mounting wall, with 1" min & 1 1/2" max space between seat edge and any wall. When folded, seat shall not extend more than 6" from mounting wall. Seat shall support a min of 250 lbs point load.

5. Locate a continuous grab bar on walls adjacent to and opposite the seat. L-shaped (Bobrick B-68616.99 or approved equal) shower grab bars are to be a minimum of 24 inches by 36 inches long, center of bar 33 to 36 inches abv the shower floor.

6. Water controls are to be a single lever design located on the side wall adjacent to the seat and operable with a maximum force of 5 lbs.

7. Provide a flexible hand held shower unit with a hose at least 60 inches long with the head mounted at 48 inches above the shower floor. Handset shall be removable from slide bar.

8. When shower curtain is provided, it shall be located so that 30" clear width inside shower is provided. Curtain shall be hung so that it can be easily moved with one hand.

1 SHOWER ELEVATION

SCALE: 3/8" = 1' - 0"

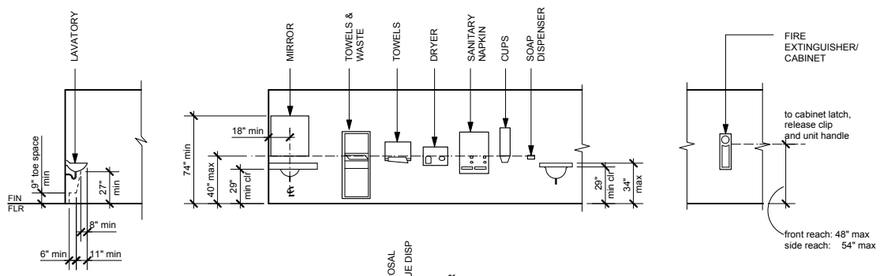

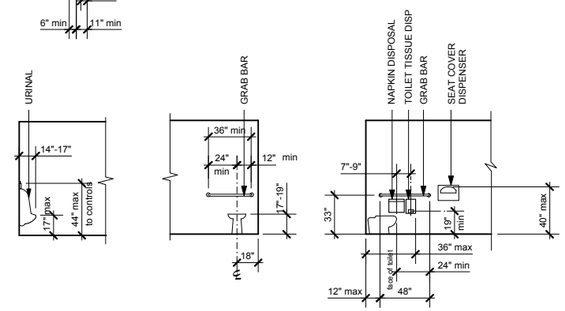

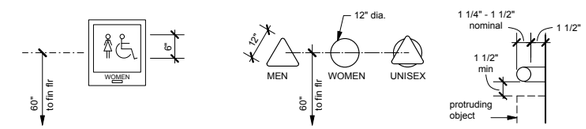

RESTROOM SIGNAGE

locate adjacent to doors at latch side, provide ISA, refer to Identification Signage requirements per Accessibility Signage Notes.

RESTROOM DOOR SIGNAGE

signs shall be 1/4" thick, & contrasting color to door

GRAB BAR

maintain min 1 1/2" clearance from grab bar on all sides, and 18" clear to protruding objects above bar

NOTES

Refer to plans and specifications for specified item size and location. All dimensions are to finished surfaces.

Lavatory rim and counter surface shall not be higher than 34" above finish floor.

Lever operated, push type and electronically controlled mechanisms are examples of acceptable designs for faucet controls. Self-closing valves are allowed if the faucet remains open for at least 10 seconds.

No sharp or abrasive surfaces are allowed under lavatories. Insulate all exposed hot water and waste lines.

Dimensions shown to mirror shall be to edge of the usable reflective surface.

Locate WC controls on wide side of fixture, no higher than 44" above finish floor.

Restroom accessories shall have dispensers and controls at 40" max from floor to highest operable part.

Controls shall be operable with one hand, and shall not require tight grasping, pinching or twisting of the wrist. The force required to activate controls shall be greater than 5 pound-force.

ACCESSIBILITY SIGNAGE

CBC (2010) 1117B.5 SIGNS with additional requirements per ADA Guidelines (1994 & 2008 proposed)

SIGNS

When signs identify permanent rooms and spaces of a building or site (IDENTIFICATION SIGNS), they shall comply with Sections A, B, & D below. When signs direct to or give information about the building or portions of a building, or site (DIRECTIONAL SIGNS), they shall comply with Sections B & C below.

INTERNATIONAL SYMBOL OF ACCESSIBILITY (ISA)

The International Symbol of Accessibility and background shall have a non-glare finish. ISA symbol shall have a white figure on a solid blue (Federal Standard 595B Color No 15090) background. At entries, we recommend a 5"w x 6"h sign.

A. MOUNTING LOCATION AND HEIGHT

Where permanent identification is provided for rooms and spaces, signs shall be installed on the wall adjacent to the latch side of the door. At double doors, the sign shall be located to the right of the right hand door. Where there is no wall space at those locations, signs shall be placed on the nearest adjacent wall, preferably on the right. Mounting location shall be so that a person may approach within 3" of signage without encountering protruding objects or standing within the swing of the door. Provide 18" min x 18" min clear floor area centered on the raised characters, and beyond the arc of the door swing. Mounting height shall be 60 inches from the finished floor to sign center.

B. FINISH AND CONTRAST

Characters, symbols, and their backgrounds shall be eggshell, matte, or other non-glare finish. Characters and symbols shall contrast with their background, either light on a dark background, or dark on a light background.

Characters shall be with a simple typeface, and not italic, oblique, script, highly decorative, or of other unusual forms. The font "TREBUCHET" is recommended.

C.VISUAL CHARACTERS

Characters on signs shall have a width-to-height ratio between 3:5 & 1:1, and a stroke width-to-height ratio between 1:5 & 1:10. Lowercase characters are permitted. Character spacing between individual characters, excluding word spaces, shall be 10% min & 35% max of the character height. Spacing between baselines of separate lines of characters within a message shall be 135% min and 170% max of the character height.

Characters shall be sized according to the sign height and viewing distance from which they can be read. Allowable character height is measured using an uppercase letter "X". Characters shall be 40" min above finished floor, measured to the baseline of the character. For viewing signs at 6' max horizontal distance, signs suspended or projected 70" max above the finished floor, character height shall be 5/8" min; for viewing signs at15' max horizontal distance and 70" min above the finished floor, character height shall be 2" min; and for viewing signs at 21' max horizontal distance and 80" min above the finished floor, character height shall be 3" min. For viewing signs at more than the maximum horizontal distance listed above, increase character height 1/8" for every foot of additional distance.

D. RAISED CHARACTERS, BRAILLE, AND PICTORAL SYMBOLS

Letters and numerals shall be raised not less than 1/32" above their background, and shall be sans serif, uppercase, with beveled or rounded edges, and shall be accompanied with contracted Grade 2 Braille. Allowable character height shall based on the uppercase letter "I", measured vertically from the baseline of the character, and shall be 5/8" min and 2" max high. Characters & Braille shall be in a horizontal format.

The width of the uppercase letter "O" of the font shall be 60% min and 100% max of height of the uppercase letter "I". Stroke width of the uppercase letter "I" shall be 10% min and 15% max of the character height.

Character spacing shall be measured between the two closest points of adjacent characters, excluding word spaces. Where characters have rectangular cross sections, spacing between individual characters shall be 1/8" min and 4 times the raised character stroke width max. Where characters have other cross sections, spacing between individual characters shall be 1/16" min and 4 times the raised character stroke width max at the base of the cross sections, and 1/8" min and 4 times the raised character stroke width max at the top of the cross sections. Characters shall be separated from raised borders and decorative elements 3/8" min. Spacing between baselines of separate lines of characters within a message shall be 135% min and 170% max of the character height.

Braille dots shall have a domed or rounded shape. Uppercase letters shall only be used before the first word of sentences, proper nouns and names, individual letters of the alphabet, initials, and acronyms. Braille shall be centered below the corresponding text. At multilined text, braille shall be located below the entire text. Braille shall be placed 3/8" min and 1/2" max below raised characters, and 3/8" min from raised borders and decorative elements. Refer to detail 34/A6.1 for dot size and spacing requirements.

Pictoral Symbols shall have a 6" min high field. Pictoral Symbols and their fields shall have a non-glare finish, and provide contrast as described in Section B above. Pictoral Symbols shall have raised text descriptors and raised braille located directly below the pictoral field. Characters or braille shall not be located in the pictoral field.

2 NOT USED

SCALE:

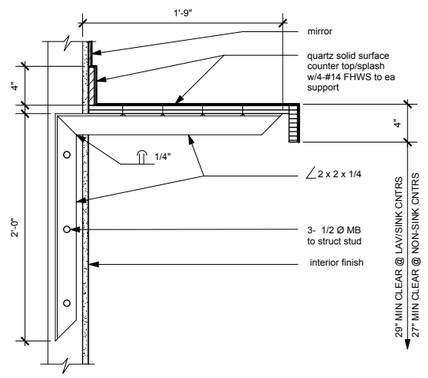

3 COUNTER SUPPORT

SCALE: 1 1/2" = 1' - 0"

note: lavatories are primarily used to wash hands & faces, typically found in restrooms. dimension shown are for the 30" wide min required clear area. cabinet/plumbing shall not extend beyond the shaded area.

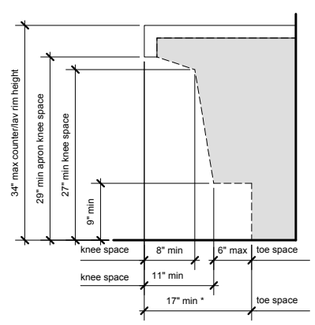

* 8" max encroachment allowed for required wheel chair turning radius & 19" max encroachment allowed for required 48" deep wheel chair clear area.

4 MOUNTING HEIGHT SCHEDULE • ACCESSIBILITY REQUIREMENTS

SCALE: NO SCALE

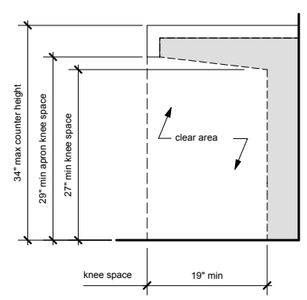

note: counter shall be 36" minimum long. dimensions shown below counter are for the 30" wide minimum required clear area. cabinet (or anything else) shall not extend beyond the shaded area into the required clear space. there shall be no sharp or abrasive surfaces under counter.

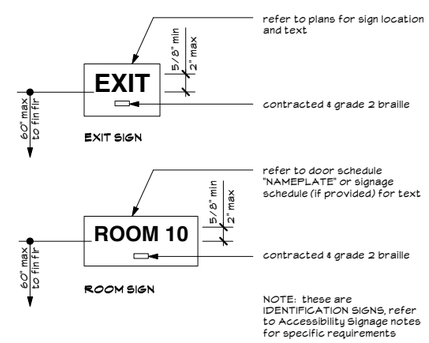

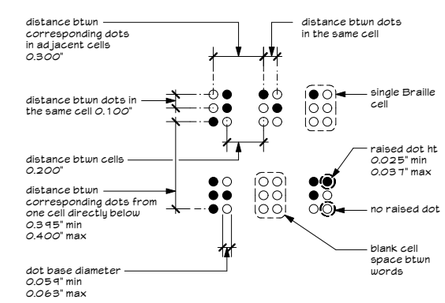

5 NOT USED

SCALE:

6 LAVATORY • CLEARANCES

SCALE: 1" = 1' - 0"

7 WORK SPACE • CLEARANCES

SCALE: 1" = 1' - 0"

8 SIGNS • IDENTIFICATION

SCALE: NOT TO SCALE

9 BRAILLE MEASUREMENT

SCALE: NOT TO SCALE

REV	DATE	BY	DESCRIPTION

DESIGNED KH
DRAWN IW
CHECKED FFG
DATE SEPTEMBER 2013

LICENSED ARCHITECT STEVEN D. PULTS No. 8611 REN. 06-30-15 STATE OF CALIFORNIA

PULTS Steven D. Pults, AIA & Associates, LLP

carollo

SAN LUIS OBISPO COUNTY

SAN LUIS OBISPO COUNTY

LOS OSOS WATER RECYCLING FACILITY PROJECT

ARCHITECTURAL
ADMINISTRATION BUILDING
ACCESSIBILITY NOTES & DETAILS

VERIFY SCALES
BAR IS ONE INCH ON ORIGINAL DRAWING
0 1"
IF NOT ONE INCH ON THIS SHEET, ADJUST SCALES ACCORDINGLY

JOB NO. 8930A.11
DRAWING NO. 05AA11
SHEET NO. XXX OF XXX

1 NOT USED
SCALE: NO SCALE

2 NOT USED
SCALE: NO SCALE

3 NOT USED
SCALE: NO SCALE

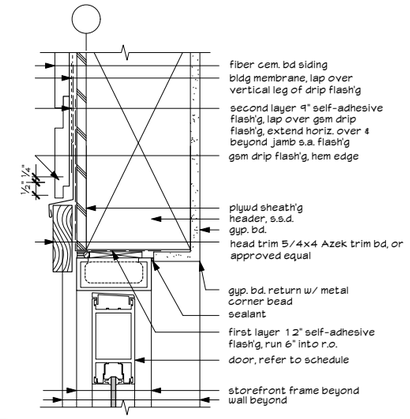

4 STOREFRONT HEAD @ LAP SIDING
SCALE: 3" = 1' - 0"

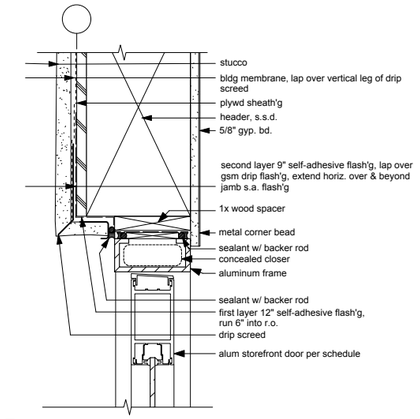

5 STOREFRONT HEAD @ STUCCO
SCALE: 3" = 1' - 0"

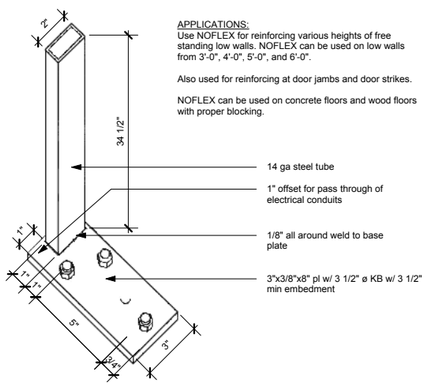

APPLICATIONS:
Use NOFLEX for reinforcing various heights of free standing low walls. NOFLEX can be used on low walls from 3'-0", 4'-0", 5'-0", and 6'-0".

Also used for reinforcing at door jambs and door strikes.

NOFLEX can be used on concrete floors and wood floors with proper blocking.

6 LOW WALL BRACE
SCALE: NO SCALE

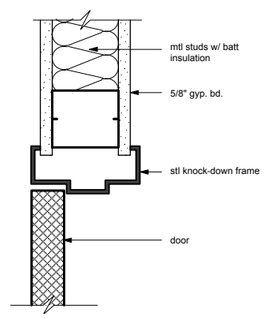

7 INT STEEL DOOR HEAD, JAMB SIM.
SCALE: 3" = 1' - 0"

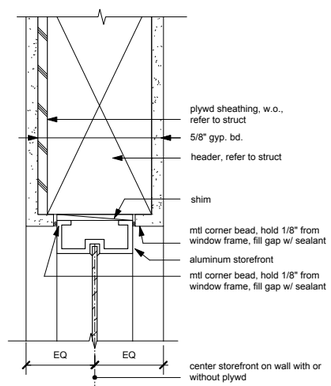

8 STOREFRONT HEAD/JAMB • INTERIOR
SCALE: 3" = 1' - 0"

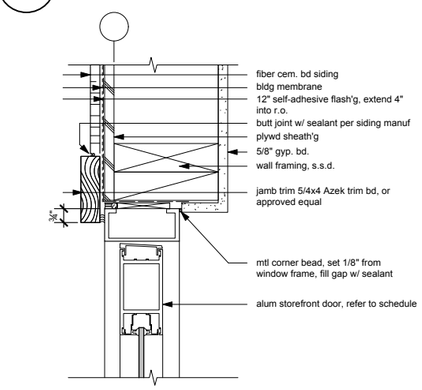

9 STOREFRONT JAMB @ LAP SIDING
SCALE: 3" = 1' - 0"

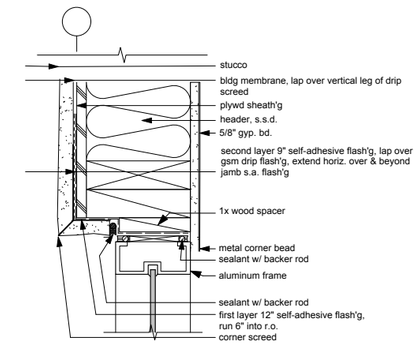

10 STOREFRONT JAMB @ STUCCO
SCALE: 3" = 1' - 0"

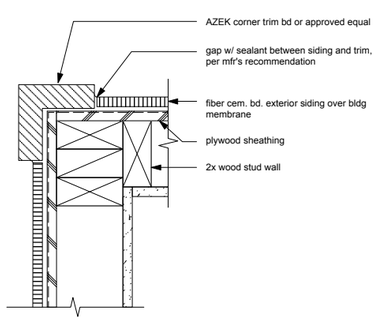

11 OUTSIDE CORNER @ LAP SIDING
SCALE: 3" = 1' - 0"

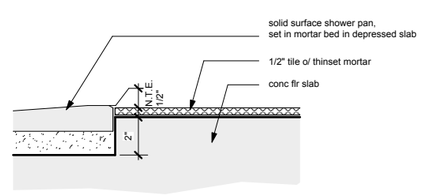

12 TILE @ SHOWER PAN
SCALE: 3" = 1' - 0"

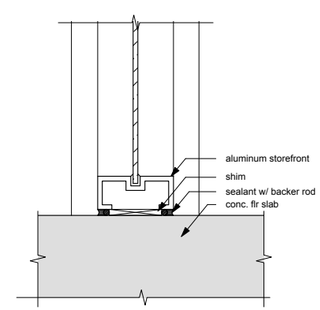

13 STOREFRONT DOOR SILL • INTERIOR
SCALE: 3" = 1' - 0"

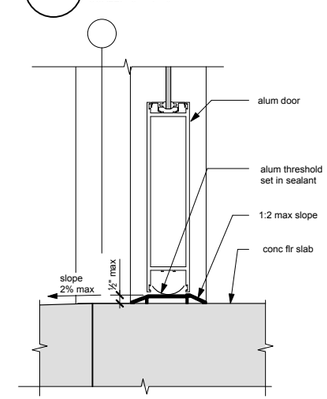

14 STOREFRONT DOOR SILL
SCALE: 3" = 1' - 0"

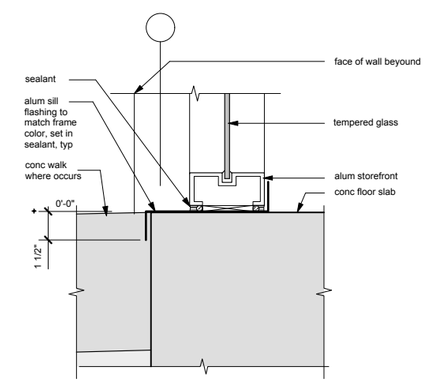

15 STOREFRONT WINDOW SILL
SCALE: 3" = 1' - 0"

REV	DATE	BY	DESCRIPTION

DESIGNED KH
DRAWN IW
CHECKED FFG
DATE SEPTEMBER 2013

LICENSED ARCHITECT STEVEN D. PULTS No. 8611 REN. 06-30-15 STATE OF CALIFORNIA

PULTS Steven D. Pults, AIA & Associates, LLP

carollo

SAN LUIS OBISPO COUNTY

SAN LUIS OBISPO COUNTY
LOS OSOS WATER RECYCLING FACILITY PROJECT
ARCHITECTURAL
ADMINISTRATION BUILDING
ALUMINIUM FRAME TYPES/DETAILS

VERIFY SCALES
BAR IS ONE INCH ON ORIGINAL DRAWING
0 1"
IF NOT ONE INCH ON THIS SHEET, ADJUST SCALES ACCORDINGLY

JOB NO. 8930A.11
DRAWING NO. 05AA12
SHEET NO. XXX OF XXX

ACOUSTIC CEILING NOTES

1. Suspended ceiling shall be exposed T-bar grid system as shown on the reflected ceiling plans. Wall angle shall be Donn "Shadowline", MS154. Grid to have low gloss finish, white & shall be rated for seismic zone 4. Refer to Finish Schedule on sheet A-3 for panel types. NCR .65 minimum light reflecting value .75.
2. Vertical Hangers
   a. Suspension wires shall be No. twelve gauge spaced at four feet on center along each main runner unless calculations justifying the increased spacing are provided. Each vertical wire shall be attached to the ceiling suspension member and to the support above with a min. of three turns.
   b. Any connection device at the supporting construction shall be capable of carrying not less than 100 pounds. Wires shall not hang more than one in six out-of-plumb unless countersloping wires are provided. Wires shall not attach to or bend around interfering material or equipment.
3. Perimeter Hangers
   a. Terminal ends of each cross runner and main runner shall be supported independently a max. of eight inches from each wall with No. twelve gauge wire or approved wall support.
4. Lateral Bracing
   a. Four twelve gauge wires shall be secured to the main runner within two inches of the cross runner intersection and splayed 90 degrees from each other at an angle not exceeding 45 degrees from the plane of the ceiling. A strut fastened to the main runner shall be extended to, and fastened to, the structural members supporting the roof. the strut shall be adequate to resist the vertical component induced by the bracing wires. These horizontal restraint points shall be placed twelve feet on center in both directions with the first point within six feet from each wall. Attachment of the restraint wiresto the structure above shall be adequate for the load imposed.
   b. Lateral force bracing members shall be spaced a min. of six inches from all horizontal piping or duct work that is not provided with bracing restraints for horizontal forces. Bracing wires shall be attached to the grid and to the structure in such a manner that they can support a design load of not less than 200 pounds or the actual design load whichever is greater, with a safety factor of two.
5. Thermal insulation required by Energy Calculations shall not be placed on top of suspended tile ceilings. Additional sound mitigating insulation (R19 batt) may be placed immediately above new suspended ceiling.
6. Suspended ceilings shall comply with CBC 2007 Section 803.9 and ASCE 7 Sec 13.5.6
7. Suspended ceilings shall be designed and installed in accordance with ASTM C635, ASTM C636, and the CISCA for Seismic Zones 3-4 as modified by the following:
   a. Sprinkler heads and other penetrations shall have a 2" oversize ring, sleeve, or adapter through the ceiling tile to allow for free movement of at least 1" in all horizontal directions.
   b. Changes in ceiling plan elevation shall be provided with positive bracing.

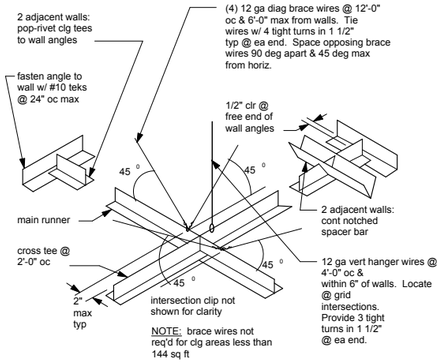

1 **SUSPENDED CEILING**
SCALE: NO SCALE

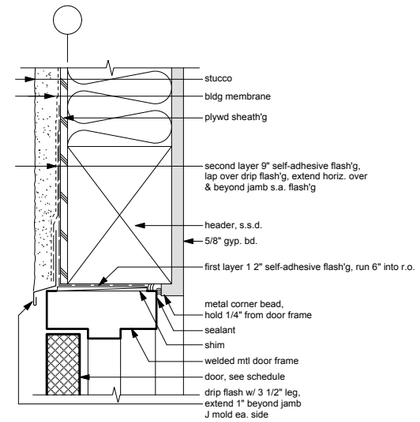

2 **DOOR HEAD @ STUCCO**
SCALE: 3" = 1' - 0"

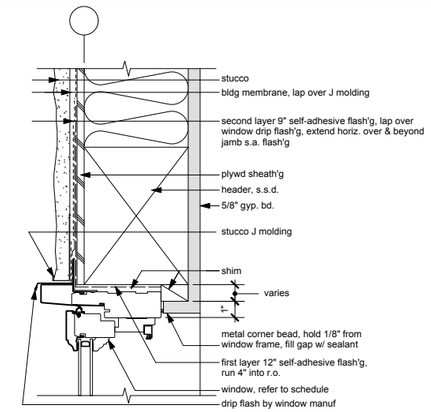

3 **WINDOW HEAD @ STUCCO**
SCALE: 3" = 1' - 0"

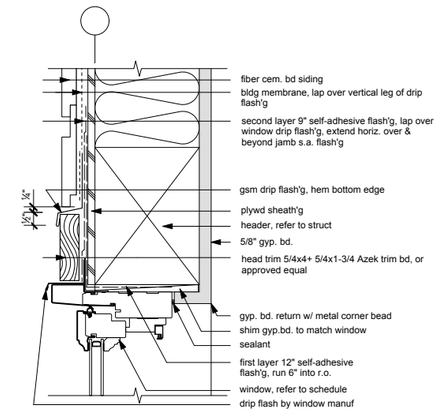

4 **WINDOW HEAD @ LAP SIDING**
SCALE: 3" = 1' - 0"

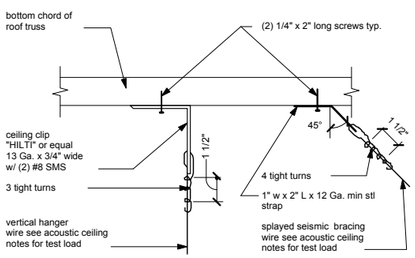

5 **SUSPENDED CEILING HANGER WIRES**
SCALE: NO SCALE

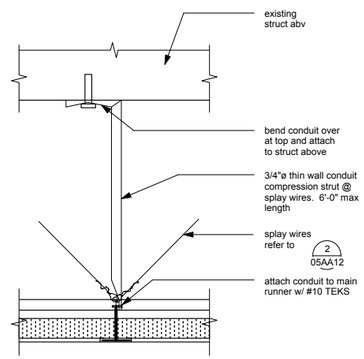

6 **SUSPENDED CEILING STRUTS**
SCALE: NO SCALE

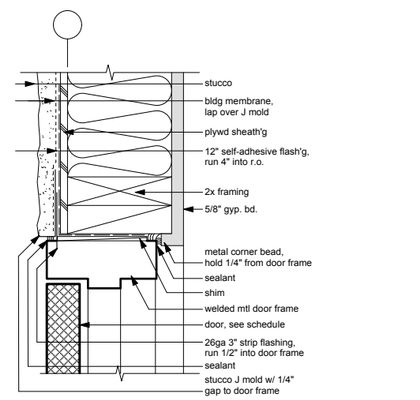

7 **DOOR JAMB @ STUCCO**
SCALE: 3" = 1' - 0"

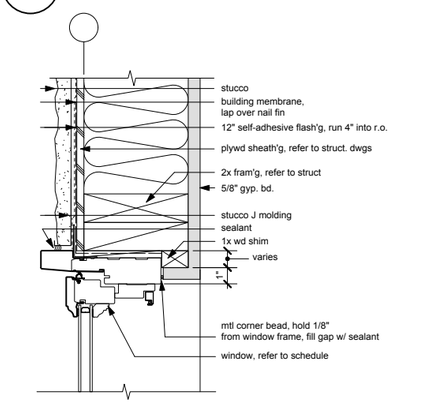

8 **WINDOW JAMB @ STUCCO**
SCALE: 3" = 1' - 0"

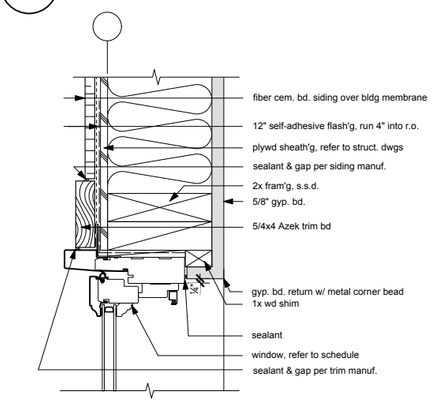

9 **WINDOW JAMB @ LAP SIDING**
SCALE: 3" = 1' - 0"

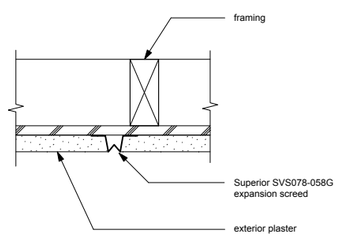

10 **NOT USED**
SCALE: -

11 **EXPANSION JOINT**
SCALE: 3" = 1' - 0"

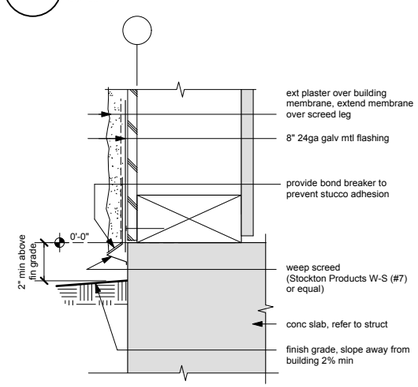

12 **BASE OF WALL**
SCALE: 3" = 1' - 0"

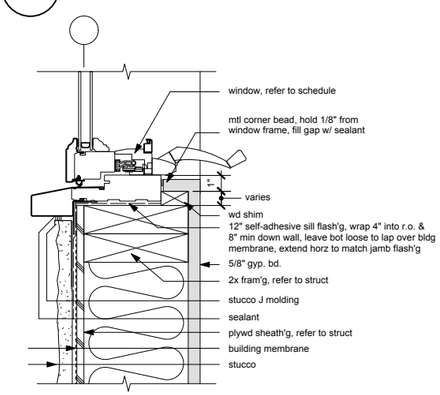

13 **WINDOW SILL @ STUCCO**
SCALE: 3" = 1' - 0"

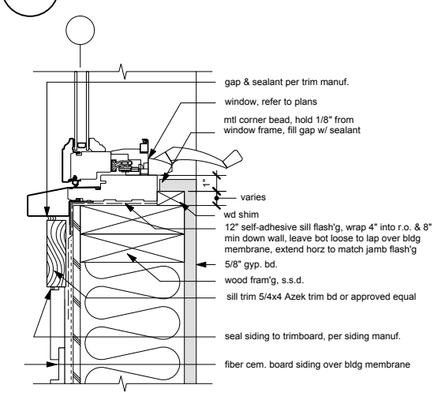

14 **WINDOW SILL@ LAP SIDING**
SCALE: 3" = 1' - 0"

REV	DATE	BY	DESCRIPTION

DESIGNED KH
DRAWN IW
CHECKED FFG
DATE SEPTEMBER 2013

LICENSED ARCHITECT STEVEN D. PULTS LICENSE NO. 8671 REN. 06-30-15 STATE OF CALIFORNIA

PULTS Steven D. Pults, AIA & Associates, LLP

carollo

SAN LUIS OBISPO COUNTY

SAN LUIS OBISPO COUNTY
LOS OSOS WATER RECYCLING FACILITY PROJECT
ARCHITECTURAL
ADMINISTRATION BUILDING
ARCHITECTURAL DETAILS

VERIFY SCALES
BAR IS ONE INCH ON ORIGINAL DRAWING
0 1"
IF NOT ONE INCH ON THIS SHEET, ADJUST SCALES ACCORDINGLY

JOB NO. 8930A.11
DRAWING NO. 05AA13
SHEET NO. XXX OF XXX

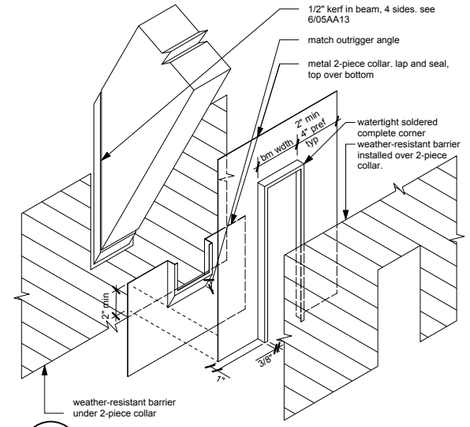

1 **FLASHING @ OUTRIGGER**
SCALE: 1 1/2" = 1' - 0"

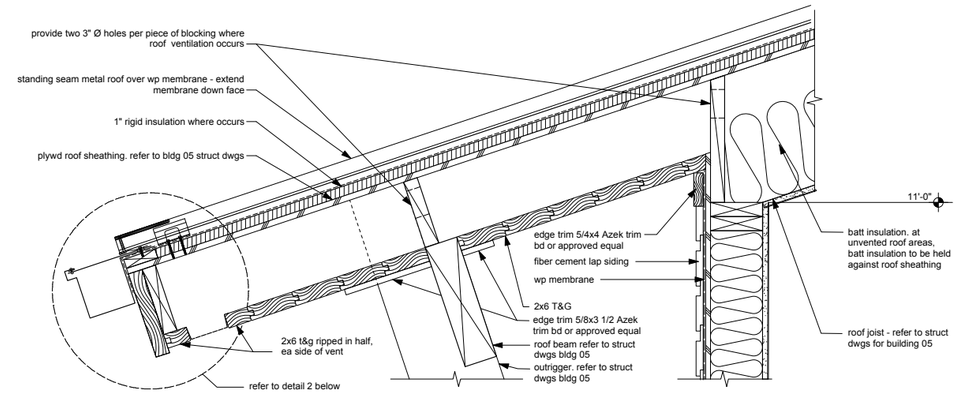

2 **EAVE**
SCALE: 1 1/2" = 1' - 0"

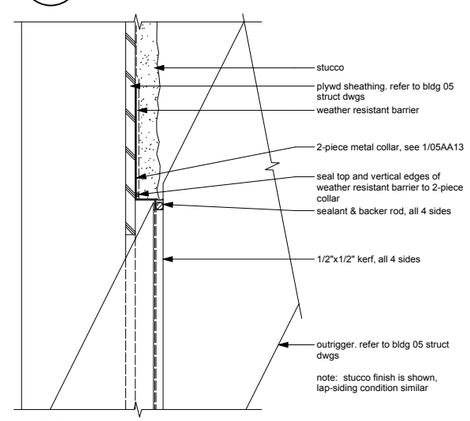

3 **FLASHING OUTRIGGER**
SCALE: 3" = 1' - 0"

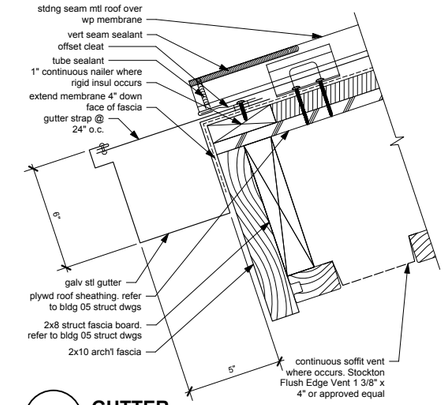

4 **GUTTER**
SCALE: 3" = 1' - 0"

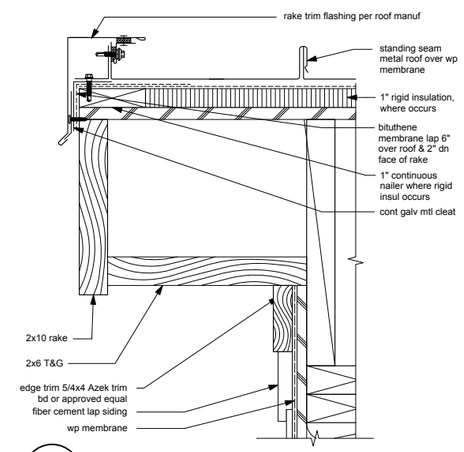

5 **RAKE**
SCALE: 3" = 1' - 0"

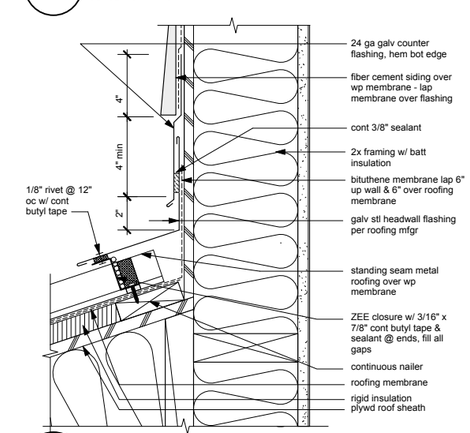

6 **HEADWALL**
SCALE: 3" = 1' - 0"

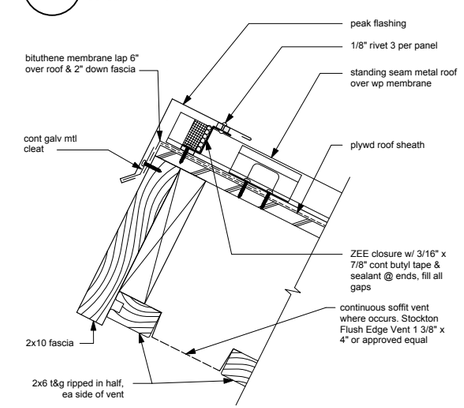

7 **PEAK**
SCALE: 3" = 1' - 0"

REV	DATE	BY	DESCRIPTION

DESIGNED KH
DRAWN IW
CHECKED FFG
DATE SEPTEMBER 2013

LICENSED ARCHITECT STEVEN D. PULTS NO. 8611 REN. 06-30-15 STATE OF CALIFORNIA

PULTS Steven D. Pults, AIA & Associates, LLP

carollo

SAN LUIS OBISPO COUNTY

SAN LUIS OBISPO COUNTY
LOS OSOS WATER RECYCLING FACILITY PROJECT
ARCHITECTURAL
ADMINISTRATION BUILDING
ROOF DETAILS

VERIFY SCALES
BAR IS ONE INCH ON ORIGINAL DRAWING
0 1"
IF NOT ONE INCH ON THIS SHEET, ADJUST SCALES ACCORDINGLY

JOB NO. 8930A.11
DRAWING NO. 05AA14
SHEET NO. XXX OF XXX

FLATWORK PLAN REFERENCE NOTES

1. NO POINT ON INDICATED PATH OF TRAVEL SHALL EXCEED 1% SLOPE
2. ELEVATION MARKERS ARE RELATIVE TO FF FLOOR OF BUILDING 5
3. DOWNSPOUT
4. PROVIDE SPLASH BLOCK TO DIRECT DOWN SPOUT FLOW TO ADJACENT SIDEWALK FOR SURFACE DRAIN
5. PROVIDE GROUND LEVEL SCUPPER TO SURFACE DRAIN PATIO
6. REFER TO DETAILS 6,7,&8 SHEET 80AA02 FOR SPECIFICATIONS AND DIMENSION SOF HANDICAP STALL
7. AREA OF SLAB DEPRESSION, SEE BLDG 05 STRUCTURAL DRAWINGS
8. CONCRETE SIDEWALK
9. SCORELINE
10. SEE CIVIL DRAWINGS FOR CURB ABND GUTTER DETAILS AND RADII
11. REQUIRED CLEAR AREA @ DOORS SHOWN DASHED
12. EQUIPMENT PAD

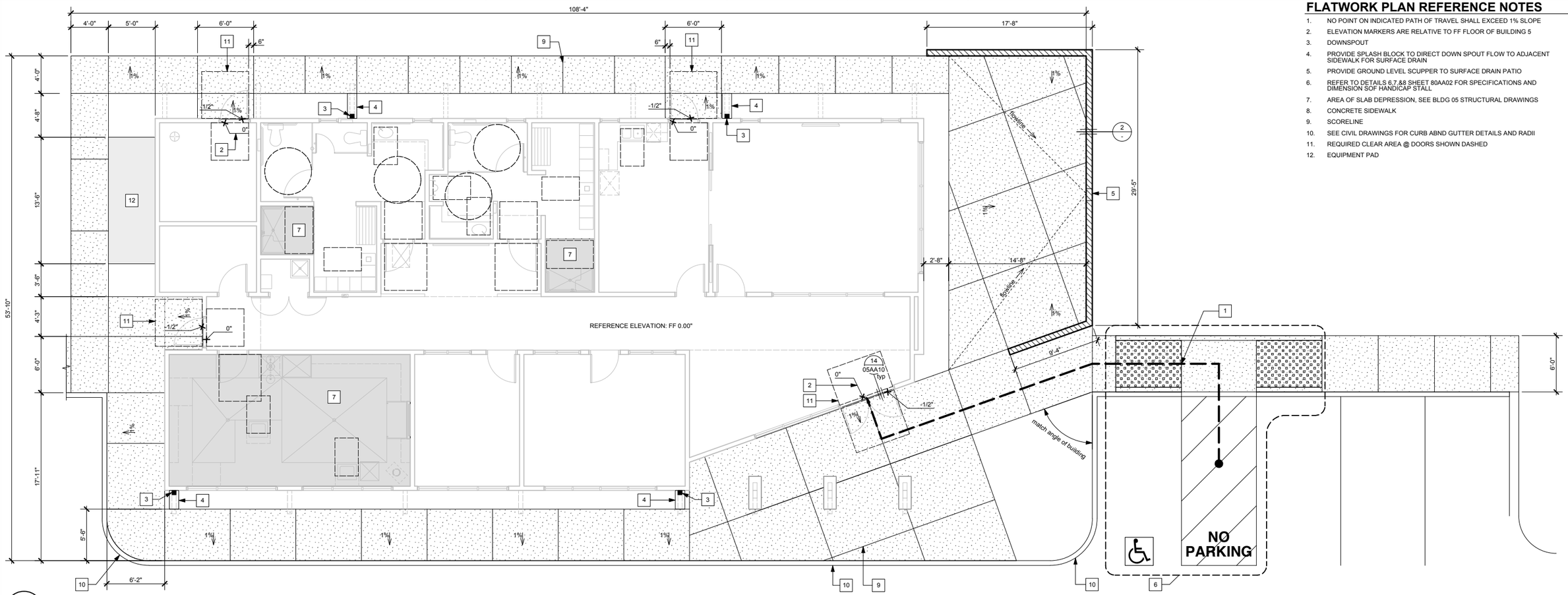

1 FLATWORK

SCALE: 3/16" = 1' - 0"

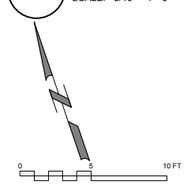

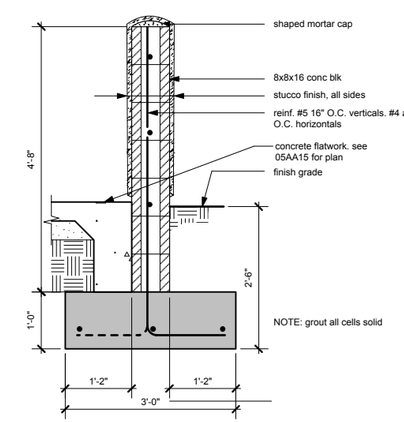

2 FREESTANDING WALL

SCALE: 3/4" = 1' - 0"

REV	DATE	BY	DESCRIPTION

DESIGNED KH
DRAWN IW
CHECKED FFG
DATE SEPTEMBER 2013

LICENSED ARCHITECT STEVEN D. PULTS NO. 8611 REN. 06-30-15 STATE OF CALIFORNIA

PULTS Steven D. Pults, AIA & Associates, LLP

carollo

SAN LUIS OBISPO COUNTY

SAN LUIS OBISPO COUNTY

LOS OSOS WATER RECYCLING FACILITY PROJECT

ARCHITECTURAL
ADMINSTRATION BUILDING
FLATWORK PLAN

VERIFY SCALES
BAR IS ONE INCH ON ORIGINAL DRAWING
0 1"
IF NOT ONE INCH ON THIS SHEET, ADJUST SCALES ACCORDINGLY

JOB NO. 8930A.11
DRAWING NO. 05AA15
SHEET NO. XXX OF XXX

GENERAL NOTES

1. THE FOLLOWING NOTES, TYPICAL DETAILS AND SCHEDULES SHALL APPLY TO ALL PHASES OF THIS PROJECT UNLESS OTHERWISE SHOWN OR NOTED.

2. SPECIFIC NOTES AND DETAILS SHALL TAKE PRECEDENCE OVER GENERAL NOTES AND TYPICAL DETAILS.

3. ALL MATERIALS AND WORKMANSHIP SHALL CONFORM TO THE MINIMUM STANDARDS OF THE 2010 EDITION OF THE CALIFORNIA BUILDING CODE (CBC) AND SUCH OTHER REGULATING AGENCIES EXERCISING AUTHORITY OVER ANY PORTION OF THE WORK. THE CONTRACTOR SHALL HAVE A COPY OF THE CBC ON THE JOB SITE.

4. THE "CONTRACT OR CONSTRUCTION DOCUMENTS" SHALL CONSIST OF THESE NOTES, DETAILS, SCHEDULES, PLANS, AND DRAWINGS, AS WELL AS ATTACHED SPECIFICATIONS.

5. ALL SPECIFICATIONS, INCLUDING BUT NOT LIMITED TO MATERIALS AND PRODUCTS, SHALL BE THOSE PUT FORTH IN THE "CONTRACT OR CONSTRUCTION DOCUMENTS". NO SUBSTITUTIONS SHALL BE PERMITTED TO BE USED OR ASSUMED TO BE USED IN THE BIDDING OR CONSTRUCTION PROCESS WITHOUT WRITTEN APPROVAL BY THE ENGINEER OF RECORD.

6. THE CONTRACTOR SHALL EXAMINE THE "CONTRACT OR CONSTRUCTION DOCUMENTS" AND SHALL NOTIFY THE ARCHITECT OR ENGINEER OF ANY DISCREPANCIES HE MAY FIND BEFORE PROCEEDING WITH THE WORK.

7. ALL INFORMATION ON EXISTING CONDITIONS SHOWN ON DRAWINGS ARE BASED ON BEST PRESENT KNOWLEDGE AVAILABLE, BUT WITHOUT GUARANTEE OF ACCURACY. THE CONTRACTOR SHALL VERIFY AND BE RESPONSIBLE FOR ALL DIMENSIONS AND CONDITIONS AT THE SITE AND SHALL NOTIFY THE ARCHITECT OR ENGINEER OF ANY DISCREPANCIES BETWEEN ACTUAL SITE CONDITIONS AND INFORMATION SHOWN ON OR IN THE "CONTRACT OR CONSTRUCTION DOCUMENTS" BEFORE PROCEEDING WITH WORK.

8. THE CONTRACTOR SHALL IMMEDIATELY NOTIFY THE ARCHITECT OR ENGINEER OF ANY CONDITION WHICH IN HIS OPINION MIGHT ENDANGER THE STABILITY OF THE STRUCTURE OR CAUSE DISTRESS OF THE STRUCTURE.

9. ALL WORK SHALL CONFORM TO THE BEST PRACTICE PREVAILING IN THE VARIOUS TRADES COMPRISING WORK. THE CONTRACTOR SHALL BE RESPONSIBLE FOR COORDINATING THE WORK OF ALL TRADES.

10. THESE "CONTRACT OR CONSTRUCTION DOCUMENTS" REPRESENT THE FINISHED STRUCTURE, AND DO NOT INDICATE THE METHOD OF CONSTRUCTION. THE CONTRACTOR SHALL SUPERVISE AND DIRECT THE WORK AND SHALL BE SOLELY RESPONSIBLE FOR CONSTRUCTION MEANS, METHODS, TECHNIQUES, SEQUENCES AND PROCEDURES.

11. INSPECTION AND APPROVAL FOR FABRICATOR'S SHOPS USED FOR FABRICATION OF STRUCTURAL LOAD BEARING MEMBERS, COMPONENTS, MATERIALS OR ASSEMBLIES SHALL CONFORM TO CBC SECTION 1704.2.

    A. LABELING (AS REQUIRED OR SPECIFIED) SHALL BE PROVIDED IN ACCORDANCE WITH CBC SECTION 1703.5.
    B. EVALUATION AND FOLLOW-UP INSPECTION SERVICES (AS REQUIRED OR SPECIFIED), SHALL CONFORM TO CBC SECTION 1703.6.

12. THE CONTRACTOR SHALL REFER TO THE SPECIFICATIONS FOR INFORMATION NOT COVERED BY THESE DRAWINGS AND GENERAL NOTES.

13. THE CONTRACTOR SHALL PROVIDE TEMPORARY BRACING AND SHORING FOR ALL STRUCTURAL MEMBERS AS REQUIRED FOR STRUCTURAL STABILITY OF THE STRUCTURE DURING ALL PHASES OF CONSTRUCTION.

14. THE CONTRACTOR SHALL TAKE ALL STEPS NECESSARY TO ENSURE PROPER ALIGNMENT OF THE STRUCTURE AFTER THE INSTALLATION OF ALL STRUCTURAL AND FINISH MATERIALS. THIS SHALL INCLUDE ANY NECESSARY PRELOADING OF THE STRUCTURE TO DETERMINE FINAL POSITION OF THE COMPLETED WORK.

15. OBSERVATION VISITS TO THE PROJECT SITE BY FIELD REPRESENTATIVES OF ARCHITECT AND/OR ENGINEER (SUPPORT SERVICES) SHALL NOT INCLUDE INSPECTIONS OF SAFETY OR PROTECTIVE MEASURES, NOR CONSTRUCTION PROCEDURES, TECHNIQUES OR METHODS. ANY SUPPORT SERVICES PERFORMED BY ARCHITECT OR ENGINEER DURING ANY PHASE OF CONSTRUCTION, SHALL BE DISTINGUISHED FROM CONTINUOUS AND DETAILED INSPECTION SERVICES (AS REQUIRED BY ANY REGULATING GOVERNMENTAL AGENCY, e.g. LOCAL BUILDING DEPARTMENT) PROVIDED BY OTHERS. THESE SUPPORT SERVICES, WHETHER OF MATERIAL OR WORK, ARE PERFORMED SOLELY FOR THE PURPOSE OF ASSISTING IN QUALITY CONTROL AND IN ACHIEVING CONFORMANCE WITH CONTRACT DOCUMENTS, BUT DO NOT GUARANTEE CONTRACTOR'S PERFORMANCE AND SHALL NOT BE CONSTRUED AS SUPERVISION OF CONSTRUCTION.

16. PROVIDE OPENINGS AND SUPPORTS AS REQUIRED PER TYPICAL DETAILS AND NOTES FOR MECHANICAL, PLUMBING, AND ELECTRICAL EQUIPMENT, VENTS, DUCTS, PIPING, ETC. ALL MECHANICAL, PLUMBING AND ELECTRICAL EQUIPMENT SHALL BE PROPERLY "SWAY BRACED" AGAINST LATERAL FORCES.

17. THESE NOTES, DETAILS, DRAWINGS AND SPECIFICATIONS (CONTRACT OR CONSTRUCTION DOCUMENTS) DO NOT CARRY NECESSARY PROVISIONS FOR CONSTRUCTION SAFETY. THESE DOCUMENTS AND ALL PHASES OF CONSTRUCTION HEREBY CONTEMPLATED ARE TO BE GOVERNED, AT ALL TIMES, BY APPLICABLE PROVISIONS OF THE CURRENT CALIFORNIA OCCUPATIONAL SAFETY AND HEALTH ACT.

18. WHERE ANY CONFLICT OCCURS BETWEEN THE REQUIREMENTS OF FEDERAL, STATE AND LOCAL LAWS, CODES, ORDINANCES, RULES AND REGULATIONS, THE MOST STRINGENT SHALL GOVERN.

19. REFER TO ARCHITECTURAL DRAWINGS TO COORDINATE WITH STRUCTURAL DRAWINGS. ANY DISCREPANCY BETWEEN THESE DRAWINGS SHALL BE REFERRED TO THE ARCHITECT OR ENGINEER FOR CLARIFICATION BEFORE START OF CONSTRUCTION.

20. WRITTEN DIMENSIONS SHALL HAVE PRECEDENCE OVER SCALED DIMENSIONS.

21. DRAWINGS (NOTES, SCHEDULES, DETAILS AND PLANS) SHALL HAVE PRECEDENCE OVER STRUCTURAL CALCULATIONS.

22. IN THE EVENT THAT CERTAIN FEATURES OF THE CONSTRUCTION ARE NOT FULLY SHOWN ON THE DRAWINGS OR CALLED FOR IN THE GENERAL NOTES OR SPECIFICATIONS, THEN THEIR CONSTRUCTION SHALL BE OF THE SAME CHARACTER AS FOR SIMILAR CONDITIONS THAT ARE SHOWN OR CALLED FOR.

23. CONTRACTOR SHALL HAVE A COPY OF PROJECT SOILS/GEOTECHNICAL/FOUNDATION INVESTIGATION ON THE JOB SITE.

24. ASTM DESIGNATION AND ALL STANDARDS REFER TO THE LATEST AMENDMENTS.

25. THESE STRUCTURAL "CONTRACT OR CONSTRUCTION DOCUMENTS" SHALL NOT BE MODIFIED WITHOUT PRIOR WRITTEN APPROVAL OF THE ENGINEER.

26. ONLY "APPROVED" STRUCTURAL WORKING DRAWINGS AND "CONTRACT OR CONSTRUCTION DOCUMENTS" ARE PERMITTED TO BE USED FOR CONSTRUCTION ON THIS PROJECT. ALL OTHER DRAWINGS OR DOCUMENTS ARE OBSOLETE AND ARE NOT PERMITTED ON THE JOB SITE, NOR SHALL THEY BE USED FOR ANY CONSTRUCTION PURPOSES. CONTRACTORS USING UNAPPROVED DRAWINGS OR DOCUMENTS ARE SOLELY RESPONSIBLE FOR ALL WORK NOT PERFORMED IN ACCORDANCE WITH THE "APPROVED" DRAWINGS.

27. SEE ARCHITECTURAL DRAWINGS FOR ALL FIRE PROTECTION REQUIREMENTS.

SHOP DRAWING AND CONTRACTOR SUBMITTAL REVIEW

1. SHOP DRAWINGS OR CONTRACTOR SUBMITTALS SHOULD BE PROVIDED FOR THE FABRICATION (OR MIXING) OF THE FOLLOWING (BUT NOT LIMITED TO) COMPONENTS OR ELEMENTS.

    A. CONCRETE (AND/OR GROUT) MIX DESIGNS.
    B. STRUCTURAL STEEL.
    C. FIRE SPRINKLERS.
    D. SUBSTITUTE OR ALTERNATE MATERIALS.

2. PROJECT CONTRACTOR SHALL BE RESPONSIBLE FOR PRODUCTION AND APPROVAL OF ALL SHOP DRAWINGS.

3. WHEN PROJECT CONTRACTOR SUBMITS SHOP DRAWINGS OR OTHER SUBMITTALS TO ARCHITECT/ENGINEER FOR REVIEW, SUBMITTAL PACKAGE SHALL CONTAIN SUFFICIENT COPIES THAT ARCHITECT/ENGINEER MAY RETAIN A COMPLETE COPY OF SUBMITTAL PACKAGE. IN ADDITION, PROJECT CONTRACTOR SHALL ALLOW SUFFICIENT TIME TO THOROUGHLY REVIEW SUBMITTAL PACKAGE (10 WORKING DAYS, MINIMUM).

4. REVIEW OF SHOP DRAWINGS OR CONTRACTOR SUBMITTAL BY ARCHITECT/ENGINEER DOES NOT IN ANY WAY CONSTITUTE APPROVAL OF SUBMITTAL PACKAGE. ARCHITECT/ENGINEER'S REVIEW IS FOR GENERAL CONFORMANCE WITH THE DESIGN CONCEPT AND CONTRACT DOCUMENTS. REVIEW SHALL NOT BE CONSTRUED AS RELIEVING PROJECT CONTRACTOR FROM COMPLIANCE WITH THE CONTRACT DOCUMENTS.

FOUNDATION NOTES

1. BASIS: GEOTECHNICAL REPORT PREPARED BY FUGRO CONSULTANTS, INC. DATED MAY 6, 2013.

2. ALLOWABLE SOIL BEARING PRESSURE:
    DEAD LOAD PLUS LIVE LOAD: 2,500 P.S.F.

3. UNEXPECTED SOIL CONDITIONS: ALLOWABLE VALUES AND FOUNDATION DESIGN ARE BASED UPON SOIL CONDITIONS SHOWN BY TEST BORINGS. ACTUAL SOIL CONDITIONS WHICH DEVIATE APPRECIABLY FROM THAT SHOWN IN THE TEST BORINGS SHALL BE REPORTED TO THE PROJECT SOILS ENGINEER IMMEDIATELY.

4. SEE SOILS OR FOUNDATION INVESTIGATION FOR COMPACTION, FILL, BACKFILLING, AND SITE PREPARATION REQUIREMENTS AND PROCEDURES.

5. EXCAVATE TO REQUIRED DEPTHS AND DIMENSIONS (AS INDICATED IN DRAWINGS AND PROJECT SOILS REPORT), CUT SQUARE AND SMOOTH WITH FIRM LEVEL BOTTOMS. CARE SHALL BE TAKEN NOT TO OVER-EXCAVATE FOUNDATION AT LOWER ELEVATION AND PREVENT DISTURBING OF SOILS AROUND HIGHER ELEVATION.

6. FOOTINGS SHALL BE POURED IN NEAT EXCAVATIONS, WITHOUT SIDE FORMS WHENEVER POSSIBLE.

7. CARRY ALL FOUNDATIONS TO REQUIRED DEPTHS INTO COMPACTED FILL OR NATURAL SOIL (AS PER STRUCTURAL PLANS AND DETAILS, AND PROJECT SOILS REPORT).

8. FOUNDATIONS SHALL NOT BE POURED UNTIL ALL REQUIRED REINFORCING STEEL, SLEEVES, INSERTS, CONDUITS, PIPES, ETC. AND FORMWORK IS PROPERLY PLACED AND INSPECTED BY THE LOCAL AUTHORITY HAVING JURISDICTION/INSPECTOR.

9. THE SIDES AND BOTTOMS OF EXCAVATIONS WHICH ARE TO HAVE CONCRETE CONTACT MUST BE MOISTENED SEVERAL TIMES JUST PRIOR TO POURING UPON THEM.

10. DE-WATER FOOTINGS, AS REQUIRED, TO MAINTAIN DRY WORKING CONDITIONS.

11. ALL FOUNDATION EXCAVATIONS SHALL BE INSPECTED AND APPROVED BY PROJECT SOILS ENGINEER, PRIOR TO FORMING AND PLACEMENT OF REINFORCING OR CONCRETE.

FOR ALL BUILDING MATERIALS AND HARDWARE SPECIFICATIONS, REFER TO PROJECT SPECIFICATIONS

CONCRETE REINFORCING SPLICES

BAR SIZE	LENGTH	fy	SPLICE CLASS
#3 & #4	24"	40 ksi (MIN.)	A
#5	36"	60 ksi (MIN.)	A
#6	48"	60 ksi (MIN.)	A

ADMINISTRATION BUILDING SCHEDULES

SHEARWALL SCHEDULE (13)

SYMBOL	SHEATHING (6)(7)(8)	NAILING (1)	SILL PLATE CONNECTION	SOLE PLATE CONNECTION	DETAIL	REMARKS
1	½" PLYWOOD (2)	10d @ 6"-12"o.c.	3x P.T.D.F. SILL (4) w/ ⅝" A.B. @ 48"o.c.	2x Plate w/ 16d (1) @ 6" o.c.	7/05AS06	(5)
2	½" PLYWOOD (2)	10d @ 4"-12"o.c.	3x P.T.D.F. SILL (4) w/ ⅝" A.B. @ 32"o.c.	N/A	7/05AS06	(5)(9)
3	½" PLYWOOD (2) DOUBLE SIDED (12)	10d @ 3"-12"o.c.	3x P.T.D.F. SILL (4) w/ ⅝" A.B. @ 16"o.c.	N/A	7/05AS06	(5)(9)

SHEARWALL SCHEDULE NOTES:

1. "Common" type nails.
    A. Fasteners in preservative-treated lumber shall be stainless steel, silicon bronze, copper or hot dip zinc coated galvanized steel fasteners.
    B. Zinc-coated fasteners shall conform to A.S.T.M. A153

2. Structural I, Douglas Fir-Larch plywood, with all edges blocked.

3. 2x P.T.D.F. foundation sill plate, minimum two anchor bolts per plate with one anchor bolt 6" to 12" from each end of plate. Provide 3"x3"x¼" plate washer at all anchor bolts.

4. 3x P.T.D.F. foundation sill plate, minimum two anchor bolts per plate with one anchor bolt 6" to 12" from each end of plate. Provide 3"x3"x¼" plate washer at all anchor bolts.

5. Refer to Foundation and Floor Framing plans for wall holdowns.

6. All edges blocked

7. Sheathing shall be continuous entire height of wall (foundation to ceiling, foundation to roof, or ceiling to roof).

8. Continue sheathing (and nailing) over side of post at end of shearwall.

9. 3x (minimum) studs and blocking at all abutting panel edges. Stagger nailing at all adjoining panel edges.

10. Stagger nailing at sill/bottom plate.

11. Simpson SDS ¼" x 6" wood screws.

12. Plywood both sides: Panel joints shall be offset to fall on different framing members or framing shall be 3x (minimum). Nails shall be staggered on each side.

13. Project Engineer to review and approve all shearwall penetrations prior to installation.

'STRONG-WALL' SCHEDULE

SYMBOL	MODEL NUMBER (1)	TOP PLATE CONNECTION (2)	SHEAR REINFORCEMENT (6)	HOLDOWN ANCHOR	DETAIL	REMARKS
SW1	SSW 18x11	9 - SDS ¼x3½" SCREWS	(1) #3 HAIRPIN (L_h = 14")	'SSWAB1 HS' w/ 20" MIN. EMBED.	6/05AS07 12/05AS08	(3)(4)(5)

'STRONG-WALL' SCHEDULE NOTES:

1. Simpson 'Steel Strong-Wall', ICC-ES ESR-1679. Install per manufacturer's specifications.

2. Simpson 'SDS' screws, ICC-ES ESR-2236.
    A. Use Simpson 'SDS' screws with double barrier coating, (yellow zinc dichromate and hot-dip galvanized) when installing into pressure treated wood.

3. Verify curb height or finish surface for proper 'Strong-Wall' nominal height.

4. All Simpson Strong Wall embeds shall be secured to formwork using corresponding Simpson Strong Wall Anchor Bolt Templates.

5. Simpson Strong Wall shall bear directly on concrete.

6. Hairpin within slab/curb at embedded holdown anchor

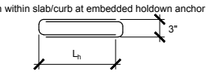

REQUIRED PRE-CONSTRUCTION MEETING:

A pre-construction meeting is required, minimum of 14 days prior to the installation of the anchor bolts for the SImpson Strong-Wall. Contractor shall contact Simpson Strong-Tie at 1-800-999-5099, or local Territory Manager Chad Scuncio at 1-805-432-8338 to schedule the meeting. The minimum attendees shall be the project general contractor, concrete contractor, and the framing contractor.

REV	DATE	BY	DESCRIPTION

DESIGNED JMM
DRAWN NWK
CHECKED MFS
DATE SEPTEMBER 2013

REGISTERED PROFESSIONAL ENGINEER MICHAEL F. SMITH NO. 35410 CIVIL STATE OF CALIFORNIA

SMITH STRUCTURAL GROUP, LLP
811 El Capitan Way, Suite 240 | 805.439.2110
San Luis Obispo, CA 93401 | smithstructural.com

carollo

SAN LUIS OBISPO COUNTY

SAN LUIS OBISPO COUNTY
LOS OSOS WATER RECYCLING FACILITY PROJECT
STRUCTURAL
ADMINISTRATION BUILDING
GENERAL STRUCTURAL NOTES

VERIFY SCALES
BAR IS ONE INCH ON ORIGINAL DRAWING
0 1"
IF NOT ONE INCH ON THIS SHEET, ADJUST SCALES ACCORDINGLY

JOB NO. 8930A.11
DRAWING NO. 05AS01
SHEET NO. XXX OF XXX

SPECIAL INSPECTION

STRUCTURAL DESIGN VALUES

WIND DESIGN DATA	VALUE
BASIC WIND SPEED (3-SEC GUST)	90 MPH
WIND IMPORTANCE FACTOR	I= 1.0
WIND EXPOSURE(S)	C
APPLICABLE INTERNAL PRESSURE COEFFICIENT	+/- 0.18
DESIGN WIND PRESSURE(S) COEFFICIENT FOR COMPONENTS & CLADDING (NOT SPECIFICALLY DESIGNED BY THE REGISTERED DESIGN PROFESSIONAL)	q_z = 17.27 psf

EARTHQUAKE DESIGN DATA	VALUE
SEISMIC IMPORTANCE FACTOR	I= 1.0
OCCUPANCY CATEGORY	II
MAPPED SPECTRAL RESPONSE ACCELERATIONS	S_S= 1.450g S_1= 0.543g
SITE CLASS	C
SPECTRAL RESPONSE COEFFICIENTS	S_{DS}=0.970g S_{D1}=0.480g
SEISMIC DESIGN CATEGORY	D
BASIC SEISMIC-FORCE RESISTING SYSTEM	BEARING WALL SYSTEMS: LIGHT FRAMED WALLS WITH STRUCTURAL PANELS
DESIGN BASE SHEAR	$V=0.136w_D$
SEISMIC RESPONSE COEFFICIENT(S)	C_S= 0.136
RESPONSE MODIFICATIONS FACTOR(S)	R= 6.5
ANALYSIS PROCEDURE USED	EQUIVALENT LATERAL FORCE PROCEDURE (ASCE 7 12.8)

LIVE LOAD DATA	VALUE
ROOF LIVE LOAD (REDUCIBLE)	20 psf
ROOF DEAD LOAD	13 psf

SPECIAL INSPECTION GENERAL NOTES

1. ALL SPECIAL INSPECTION SHALL BE PROVIDED IN ACCORDANCE WITH CBC SECTION 1704 AND 1705.
2. WHERE SPECIAL INSPECTION IS REQUIRED, ALL INSPECTION OR TESTING SHALL BE PROVIDED BY AN "APPROVED AGENCY" IN ACCORDANCE WITH CBC SECTION 1702.1, 1703.1 AND 1704.1
3. SPECIAL INSPECTORS SHALL KEEP RECORDS OF INSPECTIONS. THE SPECIAL INSPECTOR SHALL FURNISH INSPECTION REPORTS TO THE AUTHORITY HAVING JURISDICTION, AND TO THE ARCHITECT OR ENGINEER. REPORTS SHALL INDICATE THAT WORK INSPECTED WAS DONE IN CONFORMANCE TO APPROVED CONSTRUCTION DOCUMENTS. DISCREPANCIES SHALL BE BROUGHT TO THE IMMEDIATE ATTENTION OF THE CONTRACTOR FOR CORRECTION. IF THE DISCREPANCIES ARE NOT CORRECTED, THE DISCREPANCIES SHALL BE BROUGHT TO THE ATTENTION OF THE AUTHORITY HAVING JURISDICTION AND TO THE ARCHITECT OR ENGINEER PRIOR TO THE COMPLETION OF THAT PHASE OF WORK. A FINAL REPORT DOCUMENTING REQUIRED SPECIAL INSPECTIONS AND CORRECTION OF ANY DISCREPANCIES NOTED IN THE INSPECTIONS SHALL BE SUBMITTED AT A POINT IN TIME AGREED UPON BY THE PERMIT APPLICANT AND THE AUTHORITY HAVING JURISDICTION PRIOR TO THE START OF WORK.
4. SPECIAL INSPECTORS SHALL BE APPROVED BY LOCAL AUTHORITY HAVING JURISDICTION IN ACCORDANCE WITH CBC SECTION 1704.1
5. SEE ARCHITECTURAL DRAWINGS FOR SPRAYED FIRE-RESISTANT REQUIREMENTS.
   A. SPECIAL INSPECTION MAY BE REQUIRED IN ACCORDANCE WITH CBC SECTION 1704.12 AND 1704.13
   B. SPECIAL INSPECTION MAY BE REQUIRED FOR SMOKE CONTROL SYSTEMS IN ACCORDANCE WITH CBC 1704.16
6. SEE MECHANICAL, PLUMBING AND ELECTRICAL DRAWINGS FOR SPECIAL INSPECTION REQUIREMENTS.
   A. SPECIAL INSPECTION MAY BE REQUIRED IN ACCORDANCE WITH CBC SECTION 1707.7 AND 1708.4
   B. SPECIAL INSPECTION MAY BE REQUIRED FOR SMOKE CONTROL SYSTEMS IN ACCORDANCE WITH CBC 1704.16
7. SEE PROJECT SOILS REPORT FOR ALL SPECIAL INSPECTION REQUIREMENTS FOR EXISTING SOILS CONDITIONS, FILL PLACEMENT AND LOAD-BEARING REQUIREMENTS.
   A. SPECIAL INSPECTION MAY BE REQUIRED IN ACCORDANCE WITH CBC SECTION 1704.7, 1704.8, 1704.9, 1704.10 AND 1704.11
8. SEE ARCHITECTURAL DRAWINGS FOR SPECIAL INSPECTION FOR EXTERIOR INSULATION AND FINISH SYSTEMS (EIFS), STORAGE RACKS AND ACCESS FLOORS, AND ARCHITECTURAL COMPONENTS.
   A. SPECIAL INSPECTION MAY BE REQUIRED IN ACCORDANCE WITH CBC SECTION 1704.14, 1707.5 AND 1707.6
9. LOCAL AUTHORITY HAVING JURISDICTIONS MAY REQUIRE SPECIAL INSPECTION FOR "SPECIAL CASES" IN ACCORDANCE WITH CBC SECTION 1704.15
10. CONTRACTOR'S RESPONSIBILITY: EACH CONTRACTOR RESPONSIBLE FOR THE CONSTRUCTION OF A MAIN SEISMIC-FORCE-RESISTING SYSTEM, DESIGNATED SEISMIC SYSTEM OR A SEISMIC-RESISTING COMPONENT LISTED IN THE STATEMENT OF SPECIAL INSPECTION SHALL SUBMIT A WRITTEN STATEMENT OF RESPONSIBILITY TO THE AUTHORITY HAVING JURISDICTION AND THE OWNER PRIOR TO THE COMMENCEMENT OF WORK ON THE SYSTEM OR COMPONENT. THE CONTRACTOR'S STATEMENT OF RESPONSIBILITY SHALL CONTAIN THE FOLLOWING:
    A. ACKNOWLEDGEMENT OF AWARENESS OF THE SPECIAL REQUIREMENTS CONTAINED IN THE STATEMENT OF SPECIAL INSPECTIONS;
    B. ACKNOWLEDGEMENT THAT CONTROL WILL BE EXERCISED TO OBTAIN CONFORMANCE WITH THE CONSTRUCTION DOCUMENTS APPROVED BY THE AUTHORITY HAVING JURISDICTION;
    C. PROCEDURES FOR EXERCISED CONTROL WITHIN THE CONTRACTOR'S ORGANIZATION, THE METHOD AND FREQUENCY OF REPORTING AND THE DISTRIBUTION OF THE REPORTS; AND
    D. IDENTIFICATION AND QUALIFICATIONS OF THE PERSON(S) EXERCISING SUCH CONTROL AND THEIR POSITION(S) IN THE ORGANIZATION.
11. SPECIAL INSPECTION MAY BE REQUIRED FOR INSTALLATION OF ANCHORS INTO HARDENED CONCRETE, AS PER APPROVED I.C.C. REPORT.

CONCRETE CONSTRUCTION (1)(2)

VERIFICATION AND INSPECTION	CONTINUOUS	PERIODIC	REFERENCE
1. INSPECTION OF REINFORCING STEEL AND PLACEMENT.		✓	ACI 318: 3.5, 7.1-7, (2)
2. INSPECT BOLTS TO BE INSTALLED IN CONCRETE PRIOR TO AND DURING PLACEMENT OF CONCRETE WHERE ALLOWABLE LOADS HAVE BEEN INCREASED OR WHERE STRENGTH DESIGN HAS BEEN USED.	✓		ACI 318: 8.1.3, 21.2.8, CBC 1911.5, 1912.1
3. VERIFYING USE OF REQUIRED DESIGN MIX.		✓	ACI 318: Ch. 4, 5.2-5.4, CBC 1904.2.2, 1913.2-3
4. AT THE TIME FRESH CONCRETE IS SAMPLED TO FABRICATE SPECIMENS FOR STRENGTH TESTS, PERFORM SLUMP AND AIR CONTROL TESTS, AND DETERMINE THE TEMPERATURE OF THE CONCRETE.	✓		ASTM C 172, ASTM C 31, ACI 318:5.6,5.8 CBC 1913.10 (4)
5. INSPECTION OF CONCRETE PLACEMENT FOR PROPER APPLICATION TECHNIQUES.	✓		ACI 318:5.9-10, CBC 1913.6-8
6. INSPECTION FOR MAINTENANCE OF SPECIFIED CURING, TEMPERATURE AND TECHNIQUES.		✓	ACI 318:5.11-13 CBC 1913.9
7. VERIFICATION OF IN-SITU CONCRETE STRENGTH, PRIOR TO REMOVAL OF SHORES AND FORMS FROM BEAMS AND STRUCTURAL SLABS.		✓	ACI 318: 6.2
8. INSPECT FORMWORK FOR SHAPE, LOCATION AND DIMENSIONS OF THE CONCRETE MEMBER BEING FORMED.		✓	ACI 318: 6.1.1

NOTES:
1. SEE CBC SECTION 1704.4 AND TABLE 1704.4
2. SEE CBC SECTION 1913.4
3. SPECIAL INSPECTION NOT REQUIRED FOR 3 STORY OR LESS BLDG. SUPPORTED BY ROCK OR EARTH FOR THE FOLLOWING:
   A. ISOLATED SPREAD FOOTINGS.
   B. CONTINUOUS CONCRETE FOOTINGS.
   C. NONSTRUCTURAL CONCRETE SLAB ON GRADE.
4. TEST CYLINDERS/SPECIMENS
   A. CONCRETE STRENGTH SHALL BE VERIFIED BY STANDARD CYLINDER TESTS (IN ACCORDANCE WITH CBC SECTION 1905) MADE BY AN APPROVED TESTING LABORATORY. CONTRACTOR SHALL MAINTAIN COPIES OF TEST REPORTS AT JOB SITE AND AVAILABLE FOR REVEW AND INSPECTION BY BUILDING OFFICIALS. MAKE 3, MINIMUM TEST CYLINDERS FOR EACH DAY'S POUR. TEST EACH BATCH OF CYLINDERS AS FOLLOWS: 1 AT 7 DAYS, AND 2 AT 28 DAYS.
   B. SEE ALSO REQUIREMENTS A.C.I. SECTION 5.6.

WOOD CONSTRUCTION (1)(2)

VERIFICATION AND INSPECTION	CONTINUOUS	PERIODIC	REFERENCE
1. PLYWD. SHEAR WALLS.		✓	(2)(3)
2. ROOF AND FLOOR DIAPHRAGMS		✓	(2)(3)
3. DRAG STRUTS		✓	(2)(3)
4. HIGH LOAD SHEARWALLS OR DIAPHRAGMS		✓	(4)

NOTES:
1. SEE CBC SECTION 1704.6 AND 1707.3
2. NAILING, BOLTING, ANCHORING AND OTHER FASTENING OF COMPONENTS.
3. SPECIAL INSPECTION NOT REQUIRED WHERE FASTENERS SPACING OF THE SHEATHING IS MORE THAN 4"
4. THE SPECIAL INSPECTOR SHALL INSPECT THE WOOD STRUCTURAL PANEL SHEATHING TO ASCERTAIN WHETHER IT IS OF THE GRADE AND THICKNESS SHOWN ON THE APPROVED BUILDING PLANS. ADDITIONALLY, THE SPECIAL INSPECTOR MUST VERIFY THE NOMINAL SIZE OF FRAMING MEMBERS AT ADJOINING PANEL EDGES, THE NAIL OR STAPLE DIAMETER AND LENGTH, THE NUMBER OF FASTENER LINES AND THAT THE SPACING BETWEEN FASTENERS IN EACH LINE AND AT EDGE MARGINS AGREES WITH THE APPROVED BUILDING PLANS.

SOILS

VERIFICATION AND INSPECTION	CONTINUOUS	PERIODIC	REFERENCE
1. VERIFY MATERIALS BELOW SHALLOW FOUNDATIONS ARE ADEQUATE TO ACHIEVE THE DESIGN BEARING CAPACITY.		✓	
2. VERIFY EXCAVATIONS ARE EXTENDED TO PROPER DEPTH AND HAVE REACHED PROPER MATERIAL.		✓	
3. PERFORM CLASSIFICATION AND TESTING OF COMPACTED FILL MATERIALS.		✓	
4. VERIFY USE OF PROPER MATERIALS, DENSITIES AND LIFT THICKNESSES DURING PLACEMENT AND COMPACTION OF COMPACTED FILL.	✓		
5. PRIOR TO PLACEMENT OF COMPACTED FILL, OBSERVE SUBGRADE AND VERIFY THAT SITE HAS BEEN PREPARED PROPERLY.		✓	

NOTES:
1. SEE CBC SECTION 1704.7 AND TABLE 1704.7

STEEL CONSTRUCTION (1)(2)

VERIFICATION AND INSPECTION	CONTINUOUS	PERIODIC	REFERENCE
HIGH STRENGTH BOLTING			
1. IDENTIFICATION MARKINGS TO CONFORM TO ASTM STANDARDS SPECIFIED IN APPROVED CONSTRUCTION DOCUMENTS.		✓	AISC 360 A3.3
2. MANUFACTURER'S CERTIFICATE OF COMPLIANCE REQUIRED.		✓	
3. SNUG-TIGHT JOINTS.		✓	AISC 360 M2.5 CBC 1704.3.3 (5)
4. PRE-TENSIONED AND SLIP-CRITICAL JOINTS USING TURN-OF-NUT WITH MATCHMARKING, TWIST-OFF BOLT OR DIRECT TENSION INDICATOR METHODS OF INSTALLATION.		✓	AISC 360 M2.5 CBC 1704.3.3 (5)
5. PRETENSIONED AND SLIP CRITICAL JOINTS USING TURN-OF-NUT WITHOUT MATCHMARKING OR CALIBRATED WRENCH METHODS OF INSTALLATION.	✓		AISC 360 M2.5 CBC 1704.3.3 (5)
MATERIAL VERIFICATION OF STRUCTURAL STEEL AND COLD-FORMED STEEL DECK			
6. FOR STRUCTURAL STEEL, IDENTIFICATION MARKINGS TO CONFORM TO AISC 360.		✓	AISC 360 M5.5
7. FOR OTHER STEEL, IDENTIFICATION MARKINGS TO CONFORM TO ASTM STANDARDS SPECIFIED IN THE APPROVED CONSTRUCTION DOCUMENTS.		✓	
8. MANUFACTURER'S CERTIFICATION TEST REPORTS.		✓	
MATERIAL VERIFICATION OF WELD FILLER MATERIALS			
9. IDENTIFICATION MARKINGS CONFORM TO AWS SPECIFICATION IN THE APPROVED CONSTRUCTION DOCUMENTS.		✓	AISC 360 A3.5
10. MANUFACTURER'S CERTIFICATE OF COMPLIANCE REQUIRED.		✓	
WELDING - STRUCTURAL STEEL (3)			
11. COMPLETE AND PARTIAL PENETRATED GROOVE WELDS.	✓		AWS D1.1 CBC 1704.3.1
12. MULTIPASS FILLET WELDS.	✓		AWS D1.1 CBC 1704.3.1
13. SINGLE-PASS FILLET > 5/16"	✓		AWS D1.1 CBC 1704.3.1
14. PLUG AND SLOT WELDS	✓		AWS D1.1 CBC 1704.3.1
15. SINGLE-PASS FILLET < 5/16"		✓	AWS D1.1 CBC 1704.3.1
16. FLOOR AND ROOF DECKS.		✓	AWS D1.3

NOTES:
1. SEE CBC SECTION 1704.3 AND 1707.2
2. SEE CBC TABLE 1707.3
3. EXCEPTION FOR WELDING : THE SPECIAL INSPECTOR NEED NOT BE CONTINUOUSLY PRESENT DURING WELDING OF THE FOLLOWING ITEMS, PROVIDED THE MATERIALS, WELDING PROCEDURES AND QUALIFICATIONS OF WELDERS ARE VERIFIED PRIOR TO THE START OF THE WORK; PERIODIC INSPECTIONS ARE MADE OF THE WORK IN PROGRESS; AND A VISUAL INSPECTION OF ALL WELDS IS MADE PRIOR TO COMPLETION OR PRIOR TO SHIPMENT OF SHOP WELDING.
   A. SINGLE-PASS FILLET WELDS NOT EXCEEDING 5/16" IN SIZE.
   B. FLOOR AND ROOF DECK WELDING.
   C. WELDED STUDS WHEN USED FOR STRUCTURAL DIAPHRAGM.
   D. WELDED SHEET STEEL FOR COLD-FORMED STEEL FRAMING MEMBERS SUCH AS STUDS AND JOISTS.
   E. WELDING OF STAIRS AND RAILING SYSTEMS.
4. ALL METHODS OF INSTALLATION FOR HIGH STRENGTH BOLTS SHALL REQUIRE VERIFICATION OF PRE-TENSION BY A SKIDMORE-WILHELM CALIBRATOR FOR EACH BATCH OR SOURCE OF BOLTS USED. (SEE MINIMUM BOLT PRETENSION CHART).

MINIMUM BOLT PRETENSION (KIPS)

BOLT SIZE , INCHES	A325 BOLTS	A490 BOLTS
1/2" DIAMETER	12	15
5/8" DIAMETER	19	24
3/4" DIAMETER	28	35
7/8" DIAMETER	39	49
1" DIAMETER	51	64
1 1/8" DIAMETER	56	80
1 1/4" DIAMETER	71	102
1 3/8" DIAMETER	85	121
1 1/2" DIAMETER	103	148

REV	DATE	BY	DESCRIPTION

DESIGNED JMM
DRAWN NWK
CHECKED MFS
DATE SEPTEMBER 2013

REGISTERED PROFESSIONAL ENGINEER MICHAEL F SMITH NO. 35470 CIVIL STATE OF CALIFORNIA

SMITH STRUCTURAL GROUP, LLP
811 El Capitan Way, Suite 240 | 805.439.2110
San Luis Obispo, CA 93401 | smithstructural.com

carollo®

SAN LUIS OBISPO COUNTY

SAN LUIS OBISPO COUNTY
LOS OSOS WATER RECYCLING FACILITY PROJECT
STRUCTURAL
ADMINISTRATION BUILDING
GENERAL STRUCTURAL NOTES

VERIFY SCALES
BAR IS ONE INCH ON ORIGINAL DRAWING
0 1"
IF NOT ONE INCH ON THIS SHEET, ADJUST SCALES ACCORDINGLY

JOB NO. 8930A.11
DRAWING NO. 05AS02
SHEET NO. XXX OF XXX

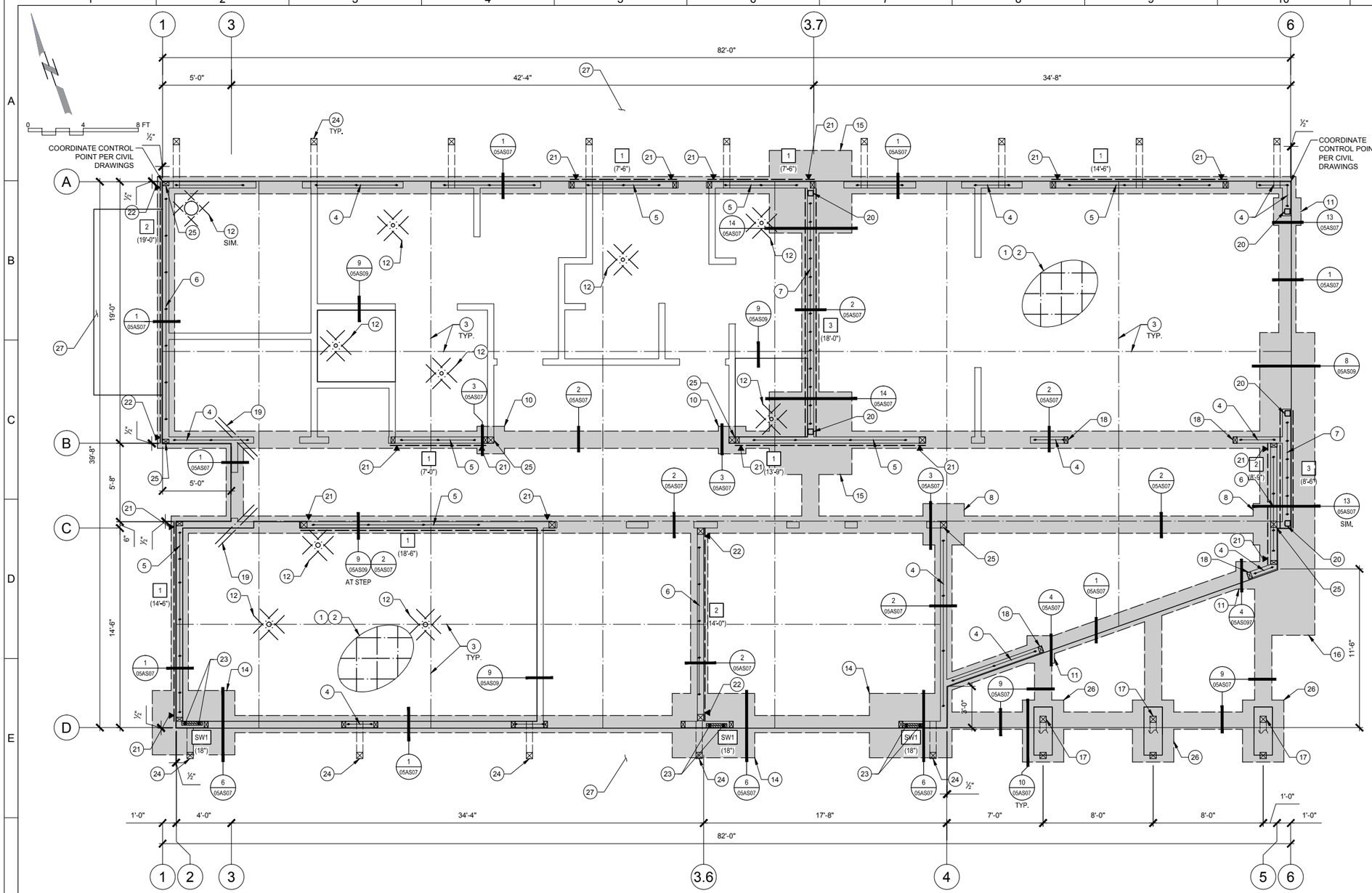

1 FOUNDATION PLAN
SCALE: 1/4" = 1'-0"

(VERIFY ALL DIMENSIONS WITH ARCHITECTURAL PLANS AND EXISTING CONDITIONS)

GENERAL FOUNDATION NOTES:

I. The foundation design shall be based on the minimum requirements as set forth in Chapter 18 of the 2010 edition of the California Building Code, Project Soils Report by Fugro Consultants, Inc. Project no. 04.6212.0178. If any unusual conditions exist, the Contractor shall notify the Architect prior to commencing with any additional work.

II. Prior to the Owner requesting a Foundation Inspection, the Contractor shall notify the Owner of the construction stage. The owner may then have the Soils Engineer advise the Building Official in writing that:

i. The building pad was prepared in accordance with C.B.C. and Soils Engineer's recommendations.
ii. The utility trenches have been properly backfilled and compacted.
iii. The foundation excavations comply with the Soils Engineer's recommendations.

III. Holdowns, anchor bolts, tiedown anchors, foundation straps, etc. shall be in place held by templates or wire ties, prior to concrete inspection.

IV. See General Structural Notes for Special Inspection requirements for foundation construction.

V. All fasteners & anchor bolts into preservative- treated & fire retardant treated wood that are highly corrosive, shall be hot dipped zinc coated galvanized, stainless steel, silicon bronze or copper. Standard galvanized connectors (G60) may be used for low corrosive sill plate material.

FOUNDATION REFERENCE NOTES: (#)

1. General Typical Notes: See Structural Notes, Sheet 05AS01 and 05AS02
   A. Refer to project specifications for concrete strength requirements.
   B. See Architectural for all embedded items and non-structural components associated with concrete work.
   C. Holdowns, anchor bolts, tiedown anchors, foundation straps, etc. shall be in place held by templates or wire ties, prior to concrete inspection.
   D. See typical details 1/05AS06, 2/05AS06, 3/05AS06 and 6/05AS06.
   E. See detail 4/05AS06 for building pad preparation.

2. 4" Concrete slab with #3 @ 18" o.c. at mid-depth of slab .
   A. See detail 5/05AS07

3. Concrete Control Joints @ 12'-0" o.c. maximum, verify with Architectural for complete layout.
   A. Provide tooled edge at joint.
   B. Option: Saw cut - See detail 3/05AS06

4. 2x P.T.D.F. sill plate, typical at all bearing walls (U.N.O.) with ⅝" diameter anchor bolts at 48" o.c.
   A. Provide 3"x3"x¼" plate washers at all sill plate anchors.

5. 3x P.T.D.F sill plate along length of shearwall with ⅝" diameter anchor bolts @ 48" o.c.
   A. Provide 3"x3"x¼" plate washers at all sill plate anchors.
   B. 3 bolts minimum.

6. 3x P.T.D.F. sill plate along length of shearwall with ⅝" diameter anchor bolts @ 32" o.c.
   A. Provide 3"x3"x¼" plate washers at all sill plate anchors.
   B. 3 bolts minimum.

7. 3x P.T.D.F. sill plate along length of shearwall with ⅝" diameter anchor bolts @ 16" o.c.
   A. Provide 3"x3"x¼" plate washers at all sill plate anchors.
   B. 3 bolts minimum.

8. 3'-0" square x 18" deep concrete pad footing.
   A. Provide 5-#5 bar each way, top and bottom.
   B. See detail 3/05AS07

9. 3'-0" square x 30" deep concrete pad footing.
   A. Provide 5-#5 bars each way, top and bottom
   B. See detail 4/05AS07

10. 2'-0" square x 18" deep concrete pad footing.
    A. Provide 3-#5 bar each way, top and bottom.
    B. See detail 3/05AS07

11. 2'-0" square x 30" deep concrete pad footing.
    A. Provide 3-#5 bars each way, top and bottom
    B. See detail 4/05AS07

12. Penetration in slab for floor drain, refer to Architectural plans
    A. See detail 15/05AS09

13. Not used.

14. 4'-8" x 6'-0" x 30" deep concrete pad footing centered below Strong Wall Panel.
    A. Provide #5 bars @ 9" o.c. each way, top and bottom
    B. See detail 6/05AS07

15. 6'-0" square x 30" deep concrete pad footing.
    A. Provide 8-#5 bars each way, top and bottom
    B. See detail 4/05AS07

16. 4'-0" x 22'-0" x 30" deep concrete pad footing.
    A. Provide #5 bars @ 9" o.c. each way, top and bottom
    B. See detail 4/05AS07

17. 6x10 DF Select Structural (S-Dry) post w/ fabricated base
    A. See detail 10/05AS07

18. 4x6 DF #1 post or trimmer framed into wall
    A. Provide A35 dip from post to sill plate and locate an anchor bolt within 6" of the face of the post

19. 2 - #3 x 4'-0" diagonal slab bars at re-entratnt corners

20. HSS5x5x¼" steel column
    A. ASTM A500, Grade B, F_y = 46 ksi
    B. See detail 12/05AS07 for base plate configuration
    C. See detail 13/05AS07 for anchorage requirements

21. Simpson HDU5 holdown to 4x post (min.) at end of shearwall
    A. See detail 11/05AS07 for installation requirements

22. Simpson HDU8 holdown to 6x post (min.) at end of shearwall
    A. See detail 11/05AS07 for installation requirements

23. Simpson SSWAB1HS anchor bolt at each end of Steel Strong Wall panel
    A. 20" minimum embedment into pad footing below, as measured from top of footing
    B. See detail 6/05AS07 for installation requirements

24. 6x10 DF FOHC Select Structural S-Dry outrigger
    A. See detail 6/05AS08 for attachment at the wall.

25. 6x6 DF #1 post or trimmer framed into wall
    A. Provide A35 dip from post to sill plate and locate an anchor bolt within 6" of the face of the post

26. 3'-0" x 4'-6" x 30" deep concrete pad footing

27. Mechanical concrete slab, refer to Architectural drawings

REV	DATE	BY	DESCRIPTION

DESIGNED JMM
DRAWN NWK
CHECKED MFS
DATE SEPTEMBER 2013

REGISTERED PROFESSIONAL ENGINEER MICHAEL F. SMITH NO. 35410 CIVIL STATE OF CALIFORNIA

SMITH STRUCTURAL GROUP, LLP
811 El Capitan Way, Suite 240 | 805.439.2110
San Luis Obispo, CA 93401 | smithstructural.com

carollo

SAN LUIS OBISPO COUNTY

SAN LUIS OBISPO COUNTY
LOS OSOS WATER RECYCLING FACILITY PROJECT
STRUCTURAL
ADMINISTRATION BUILDING
FOUNDATION PLAN

VERIFY SCALES
BAR IS ONE INCH ON ORIGINAL DRAWING
0 1"
IF NOT ONE INCH ON THIS SHEET, ADJUST SCALES ACCORDINGLY

JOB NO. 8930A.11
DRAWING NO. 05AS03
SHEET NO. XXX OF XXX

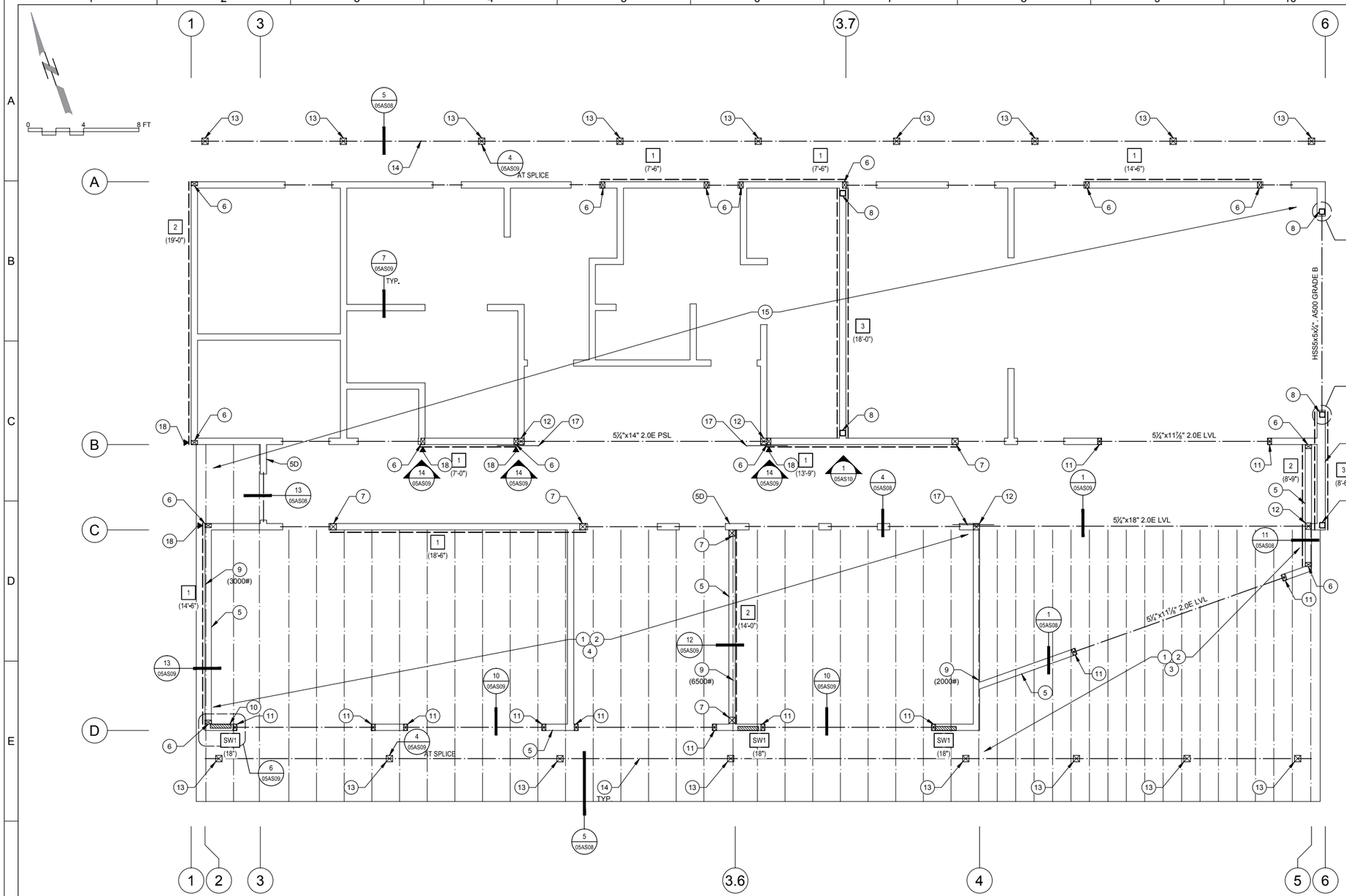

LOWER ROOF FRAMING REFERENCE NOTES:

1. General Typical Notes: See General Structural Notes
   A. Refer to Architectural Floor Plans for interior non-bearing walls, soffits, and eave details, and miscellaneous non-structural details and requirements.
   B. Double 2x framing members shall be stitch nailed with 16d @ 6" o.c. (typical, U.N.O.).

2. Typical Roof Sheathing: ⅝" Structural I Plywood
   A. Panel Index: 32/16.
   B. Use exterior grade where plywood is exposed to weather.
   C. Nail with 10d @ 6"-6"-12" o.c.
   D. Lay with face grain perpendicular to framing.
   E. Stagger sheets.
   F. See detail 9/05AS08
   G. Provide blocking and strapping per detail 5/05AS10 at all mechanical penetrations

3. 1¾"x7¼" 2.0 Redlam LVL Rafters @ 16" o.c.
   A. Provide Simpson LSSUI25 hangers at suspended conditions

4. Pre-manufactured roof trusses @ 24" o.c.
   A. Refer to Truss Notes on Sheet 05AS02
   B. See detail 7/05AS09 for typical non-bearing wall connection.

5. 1¾"x5½" (minimum) Stud Bearing Wall.
   A. 1¾"x5½" 2.0E Redlam studs @ 16" o.c. (U.N.O.).
   B. Use triple 1¾"x7¼" 2.0E Redlam LVL header over all doors and windows (U.N.O.).
   C. See detail 05/05AS06 for typical top plate splice.
   D. Balloon framed in this location.

6. 3½"x5½" 2.0.E Redlam LVL full height post at end of shearwall.
   A. See typical shearwall elevation, detail 7/05AS06
   B. Member to receive shearwall plywood edge nailing and holdown at foundation level.

7. 5½"x5½" 2.0E Redlam LVL full height post at end of shearwall.
   A. See typical shearwall elevation, detail 7/05AS06
   B. Member to receive shearwall plywood edge nailing and holdown at foundation level.

8. HSS5x5x¼" Steel Column
   A. ASTM A500, Grade B, F_y = 46 ksi
   B. See details 2/05AS09 & 3/05AS09 for nailer attachments
   C. See detail 2 /05AS10 for column cap

9. Gable end truss located over exterior wall.
   A. Truss profile to match adjacent roof trusses.
   B. Trusses shall be designed to transfer lateral load as noted on the plans.
   C. Continue shearwall sheathing along the face of the truss

10. Set Simpson Strongwall at inside face of wall

11. 3½"x5½" 2.0E Redlam LVL trimmer post
    A. Provide Simpson EPC64 post cap

12. 5½"x5½" 2.0E Redlam LVL post
    A. Provide Simpson EPC66 post cap

13. 6 x10 (min.) DF FOHC Select Structural S-Dry outrigger
    See details 6/05AS08 and 7/05AS08

14. 4x14 DF FOHC Select Structural Roof Beam

15. See Sheet 05AS05 for upper roof framing plan.

16. 1¾"x7¼" Stud Bearing Wall.
    A. 1¾"x7¼" 2.0E Redlam studs @ 12" o.c. (U.N.O.). for wall heights greater than 20'-0", 16" o.c. for heights less than 20'-0".
    B. Use triple 1¾"x7¼" 2.0E Redlam LVL header over all doors and windows (U.N.O.).
    C. See detail 05/05AS06 for typical top plate splice.

17. Simpson ST6236 strap centered across beam and top plates
    A. See detail 4/05AS10

18. Simpson MST48 strap centered across sheathed truss, and post below

FOR ADMINISTRATION BUILDING SHEARWALL AND STRONGWALL SCHEDULES, REFER TO SHEET 05AS01

1 LOWER ROOF FRAMING PLAN

SCALE: 1/4" = 1'-0"

REV	DATE	BY	DESCRIPTION

DESIGNED JMM
DRAWN NWK
CHECKED MFS
DATE SEPTEMBER 2013

REGISTERED PROFESSIONAL ENGINEER MICHAEL F SMITH NO. 35410 CIVIL STATE OF CALIFORNIA

SMITH STRUCTURAL GROUP, LLP
811 El Capitan Way, Suite 240 | 805.439.2110
San Luis Obispo, CA 93401 | smithstructural.com

carollo®

SAN LUIS OBISPO COUNTY

SAN LUIS OBISPO COUNTY
LOS OSOS WATER RECYCLING FACILITY PROJECT
STRUCTURAL
ADMINISTRATION BUILDING
ROOF FRAMING PLAN

VERIFY SCALES
BAR IS ONE INCH ON ORIGINAL DRAWING
0 1"
IF NOT ONE INCH ON THIS SHEET, ADJUST SCALES ACCORDINGLY

JOB NO. 8930A.11
DRAWING NO. 05AS04
SHEET NO. XXX OF XXX

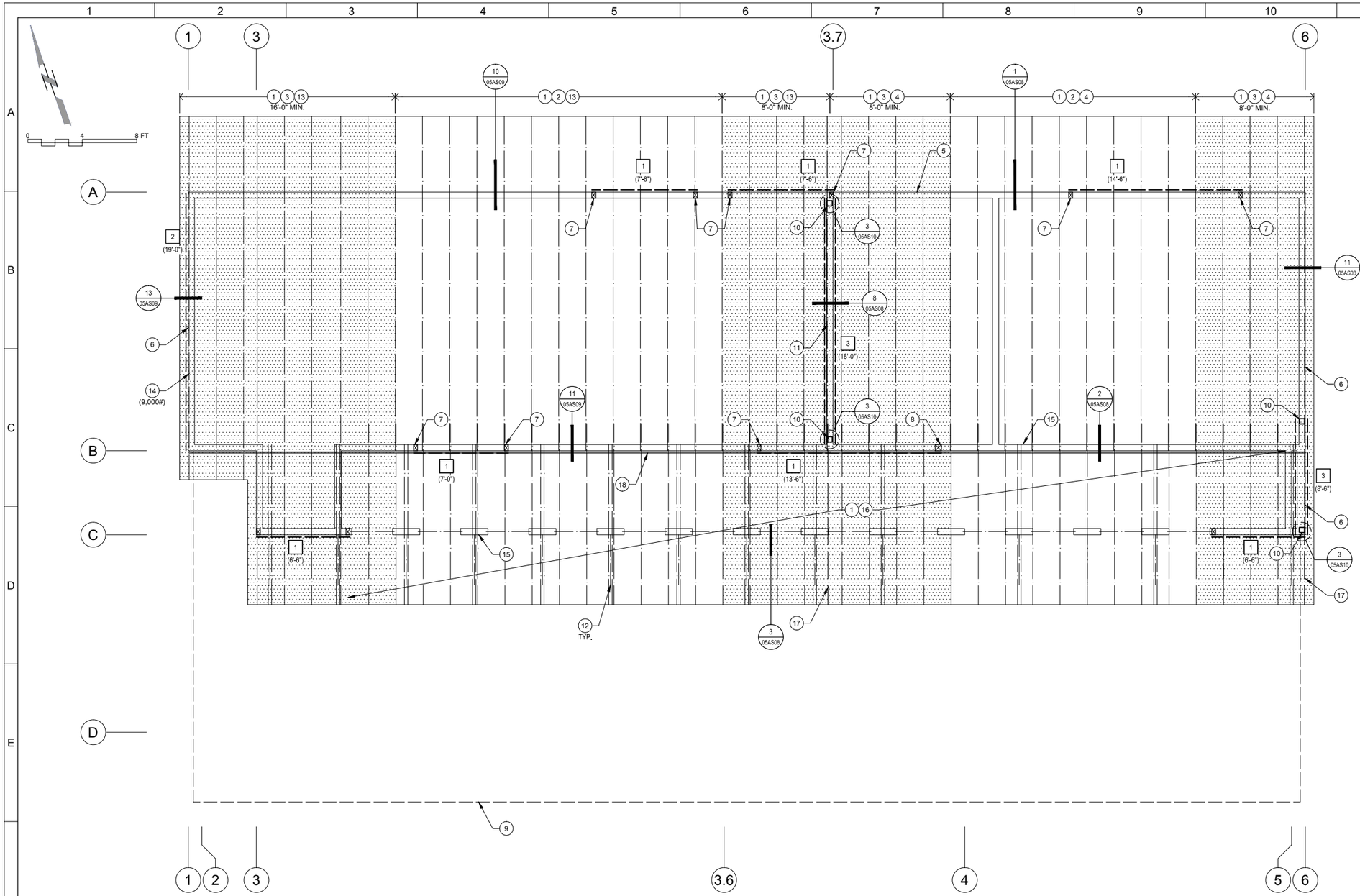

UPPER ROOF FRAMING REFERENCE NOTES:

1. General Typical Notes: See General Structural Notes
   A. Refer to Architectural Floor Plans for interior non-bearing walls, soffits, and eave details, and miscellaneous non-structural details and requirements.
   B. Double 2x framing members shall be stitch nailed with 16d @ 6" o.c. (typical, U.N.O.).

2. Typical Roof Sheathing: ⅝" Structural I Plywood
   A. Panel Index: 32/16.
   B. Use exterior grade where plywood is exposed to weather.
   C. Nail with 10d @ 6"-6"-12" o.c.
   D. Lay with face grain perpendicular to framing.
   E. Stagger sheets.
   F. See detail 9/05AS08
   G. Provide blocking and strapping per detail 5/05AS10 at all mechanical penetrations.

3. Typical Roof Sheathing: ⅝" Structural I Plywood
   A. Panel Index: 32/16.
   B. Use exterior grade where plywood is exposed to weather.
   C. Block all panel edges with 3x flat blocking
   D. Nail with 10d @ 4"-6"-12" o.c.
   E. Lay with face grain perpendicular to framing.
   F. Stagger sheets.
   G. See detail 10/05AS08
   H. Provide blocking and strapping per detail 5/05AS10 at all mechanical penetrations.

4. 1¾"x14" 2.0 Redlam LVL Rafters @ 24" o.c.

5. 1½"x5½" Stud Bearing Wall.
   A. 1½"x5½" 2.0E Redlam studs (minimum) @ 16" o.c. (U.N.O.).
   B. Use triple 1¾"x7¼" 2.0E Redlam LVL header over all doors and windows (U.N.O.).
   C. See detail 05/05AS06 for typical top plate splice.

6. 1¾"x 7¼" (minimum) Stud Bearing Wall.
   A. For stud heights greater than 20'-0", use 1 ¾"x 7¼" 2.0E Redlam LVL studs @ 12" o.c. (U.N.O.).
   B. For all other stud heights, use 1 ¾"x 7¼" 2.0E Redlam LVL studs @ 16" o.c. (U.N.O.).
   C. Use triple 1¾"x7¼" 2.0E Redlam LVL header over all doors and windows (U.N.O.).
   D. See detail 05/05AS06 for typical top plate splice.

7. 3½"x5½" 2.0.E Redlam LVL full height post at end of shearwall.
   A. See typical shearwall elevation, detail 7/05AS06
   B. Member to receive shearwall plywood edge nailing and holdown at floor level.

8. 5½"x5½" 2.0E Redlam LVL full height post at end of shearwall.
   A. See typical shearwall elevation, detail 7/05AS06
   B. Member to receive shearwall plywood edge nailing and holdown at floor level.

9. See Sheet 05AS04 for lower roof framing plan.

10. HSS5x5x¼" Steel Column
    A. ASTM A500, Grade B, Fy=46 ksi
    B. See details 2/05AS09 and 3/05AS09 for nailer attachment.
    C. See detail 2/05AS10 for column cap.

11. 3½"x14" 2.0E Redlam LVL over shearwall
    A. Member to receive plywood edge nailing, full length

12. 6x6 DF #1 kicker post
    A. See detail 14/05AS08 for connection at roof diaphragm
    B. See detail 15/05AS08 for connection at wall

13. Pre-manufactured roof trusses @ 24" o.c.
    A. Truss Manufacturer to provide attic space within the trusses for mechanical units per Architectural drawings.

14. Gable end truss located over exterior wall.
    A. Truss profile to match adjacent roof trusses.
    B. Trusses shall be designed to transfer the lateral load as noted on the plans.
    C. Continue shearwall sheathing along the face of the truss

15. 1½"x5½" (minimum) Balloon Framed Stud Bearing Wall.
    A. 1½"x5½" 2.0E Redlam studs @ 16" o.c. (U.N.O.).
    B. Use triple 1¾"x7¼" 2.0E Redlam LVL header over all doors and windows (U.N.O.).
    C. See detail 05/05AS06 for typical top plate splice.
    D. Sheath all portions of the wall above the lower roof diaphragm and provide continuous strapping above and below window penetrations per detail 8/05AS06.

16. 1¾"x7¼" 2.0E Redlam LVL rafters @ 24" o.c.

17. Edge nail rafter, full length

18. Continuous CS16 strap, over flat 2x blocking
    A. Nail every other hole

FOR ADMINISTRATION BUILDING SHEARWALL AND STRONGWALL SCHEDULES, REFER TO SHEET 05AS01

1 UPPER ROOF FRAMING PLAN

SCALE: 1/4" = 1'-0"

REV	DATE	BY	DESCRIPTION

DESIGNED JMM
DRAWN NWK
CHECKED MFS
DATE SEPTEMBER 2013

REGISTERED PROFESSIONAL ENGINEER MICHAEL F SMITH NO. 35410 CIVIL STATE OF CALIFORNIA

SMITH STRUCTURAL GROUP, LLP
811 El Capitan Way, Suite 240 | 805.439.2110
San Luis Obispo, CA 93401 | smithstructural.com

carollo®

SAN LUIS OBISPO COUNTY

SAN LUIS OBISPO COUNTY
LOS OSOS WATER RECYCLING FACILITY PROJECT
STRUCTURAL
ADMINISTRATION BUILDING
UPPER ROOF FRAMING PLAN

VERIFY SCALES
BAR IS ONE INCH ON ORIGINAL DRAWING
0 1"
IF NOT ONE INCH ON THIS SHEET, ADJUST SCALES ACCORDINGLY

JOB NO. 8930A.11
DRAWING NO. 05AS05
SHEET NO. XXX OF XXX

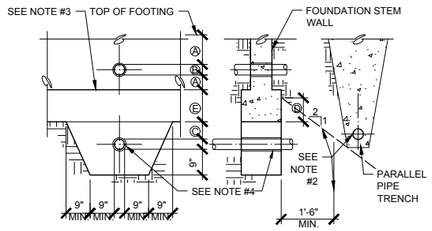

NOTES:
1. DIMENSION - (A) ½ OVERALL FTG. DEPTH - MIN.
(B) MAX.½ OVERALL FTG. DEPTH
(C) 4"-MIN.
(D) 9"-MIN.
(E) NO PIPE TO BE PLACED IN THIS AREA.
2. PIPE TRENCHES PARALLEL TO FOOTING NOT PERMITTED BETWEEN LINES, ON EA. SIDE OF FTG
3. STEP FOOTING AS REQ'D.
4. G.I.S.M. OR EQUIVALENT PIPE SLEEVE, W/ ½" CLEAR ALL AROUND PIPE.

PIPE THROUGH FOOTING (1)

N.T.S.

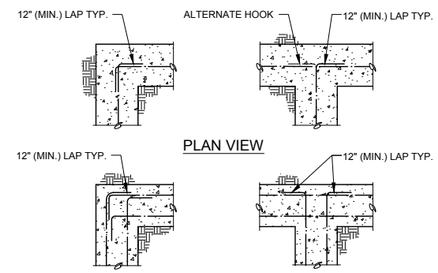

NOTES:
1. TYPICAL HORIZ. FOOTING STEEL SHOWN
2. VERTICAL STEEL NOT SHOWN FOR CLARITY
3. SEE SPECIFIC DETAILS FOR STL. SIZE, NUMBER AND SPACING

TYPICAL FOOTING CORNER (2)

N.T.S.

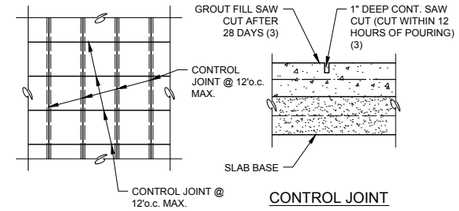

NOTES:
1. SEE TYPICAL SLAB SECTION FOR SLAB CONSTRUCTION AND REINF.
2. PROVIDE JOINTS @ 12' o.c. (MAX.) UNLESS OTHERWISE NOTED ON PLANS
3. CONTRACTOR OPTION: A PLASTIC 'ZIP STRIP' OR 'QUICK-JOINT' MAY BE USED IN LIEU OF SAW CUT

SLAB CONTROL JOINT (3)

N.T.S.

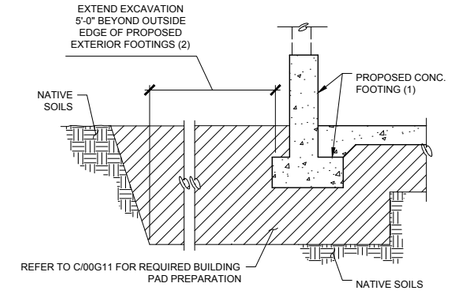

NOTES:
1. SEE FOUNDATION PLAN AND NOTES
2. SEE PROJECT SOILS REPORT

BLDG. PAD PREPARATION (4)

N.T.S.

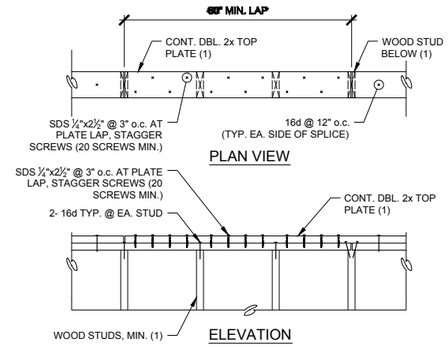

NOTES:
1. SEE FRAMING PLAN AND NOTES

TOP PLATE SPLICE (5)

N.T.S.

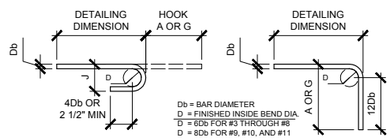

180-DEG

BAR SIZE	DIMENSION OF STANDARD 180-DEG HOOKS, ALL GRADES		
	A OR G	J	D
#3	5"	3"	2 1/4"
#4	6"	4"	3"
#5	7"	5"	3 3/4"
#6	8"	6"	4 1/2"
#7	10"	7"	5 1/4"
#8	11"	8"	6"
#9	1'-3"	11 3/4"	9 1/2"
#10	1'-5"	1'-1 1/4"	10 3/4"
#11	1'-7"	1'-2 3/4"	12"
#14	2'-3"	1'-9 3/4"	18 1/4"
#18	3'-0"	2'-4 1/2"	24"

90-DEG

DIMENSION OF STANDARD 90-DEG HOOKS, ALL GRADES	
A OR G	D
6"	2 1/4"
8"	3"
10"	3 3/4"
1'-0"	4 1/2"
1'-2"	5 1/4"
1'-4"	6"
1'-7"	9 1/2"
1'-10"	10 3/4"
2'-0"	12"
2'-7"	18 1/4"
3'-5"	24"

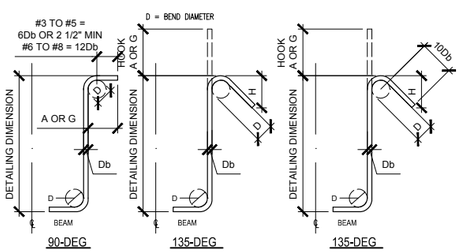

STIRRUP HOOKS
(TIE BENDS SIMILAR)

SEISMIC STIRRUP/TIE

BAR SIZE	90°		135°	
	D	A OR G	A OR G	APPROX H
#3	1 1/2"	4"	4"	2 1/4"
#4	2"	4 1/2"	4 1/2"	3"
#5	2 1/2"	6"	5 1/2"	3 3/4"
#6	4 1/2"	1'-0"	8"	4 1/2"
#7	5 1/4"	1'-2"	9"	5 1/4"
#8	6"	1'-4"	10 1/2"	6"

135° SEISMIC HOOK			
SIZE	D	A OR G	APPROX H
#3	1 1/2"	5"	3 1/2"
#4	2"	6 1/2"	4 1/2"
#5	2 1/2"	8"	5 1/2"
#6	4 1/2"	11"	6 1/2"
#7	5 1/4"	1'-0 1/2"	7 3/4"
#8	6"	1'-2 1/2"	9"

TYP. REBAR BENDS/HOOKS (6)

N.T.S.

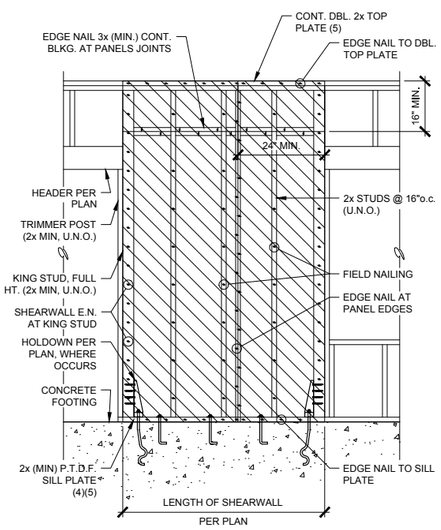

NOTES:
1. PANELS TO BE APPLIED HORIZONTALLY OR VERTICALLY OVER STUDS @ 16" o.c. (MAX. SPACING) WITH ALL EDGES BLOCKED
2. PANELS MAY BE PLYWOOD (GROUP 1 OR 2) OR APA PERFORMANCE RATED PANELS
3. WHERE SHEATHING IS APPLIED TO BOTH SIDES OF A WALL, OFFSET VERTICAL JOINTS BY ONE STUD BAY MIN.
4. SEE SHEARWALL SCHEDULE FOR LOCATION AND ATTACHMENT
5. SEE FRAMING PLAN FOR ADDITIONAL INFORMATION

WOOD STUD SHEARWALL (7)

N.T.S.

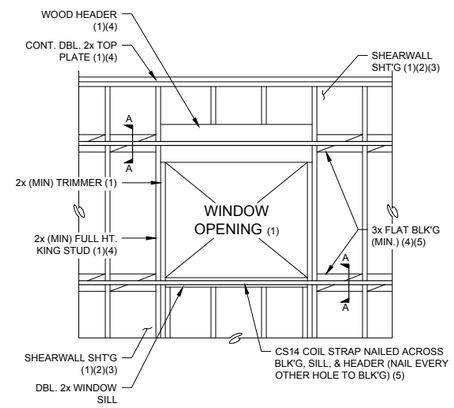

FRAMING ELEVATION

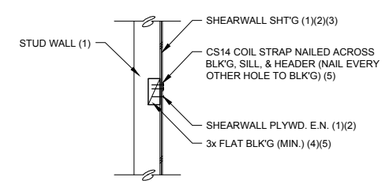

SECTION A-A

NOTES:
1. SEE FRAMING PLAN AND NOTES
2. SEE SHEARWALL SCHEDULE AND NOTES
3. CONTINUE SHT'G ABOVE AND BELOW WINDOW OPENING
4. MEMBER TO RECEIVE SHEARWALL PLYWOOD E.N. FULL HEIGHT
5. CONTINUE COIL STRAP AND BLOCKING ENTIRE LENGTH OF SHEARWALL

WINDOW w/in SHEARWALL (8)

N.T.S.

REV	DATE	BY	DESCRIPTION

DESIGNED JMM
DRAWN NWK
CHECKED MFS
DATE SEPTEMBER 2013

REGISTERED PROFESSIONAL ENGINEER MICHAEL F. SMITH NO. 35470 CIVIL STATE OF CALIFORNIA

SMITH STRUCTURAL GROUP, LLP
811 El Capitan Way, Suite 240 | 805.439.2110
San Luis Obispo, CA 93401 | smithstructural.com

carollo

SAN LUIS OBISPO COUNTY

SAN LUIS OBISPO COUNTY
LOS OSOS WATER RECYCLING FACILITY PROJECT
STRUCTURAL
ADMINISTRATION BUILDING
STRUCTURAL DETAILS

VERIFY SCALES
BAR IS ONE INCH ON ORIGINAL DRAWING
0 1"
IF NOT ONE INCH ON THIS SHEET, ADJUST SCALES ACCORDINGLY

JOB NO. 8930A.11
DRAWING NO. 05AS06
SHEET NO. XXX OF XXX

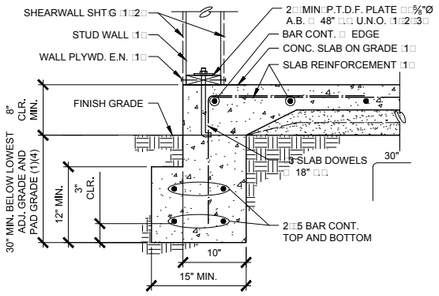

NOTES
1. SEE FRAMING/FOUNDATION PLAN AND NOTES
2. SEE SHEARWALL SCHEDULE AND NOTES
3. 3" S, ¼" PLATE WASHER EA. ANCHOR BOLT
4. REFER TO PROJECT SOILS REPORT

CONTINUOUS EXT. FOOTING (1)

N.T.S.

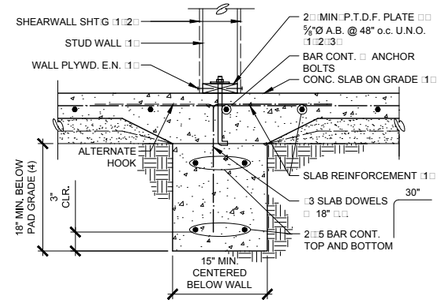

NOTES
1. SEE FRAMING/FOUNDATION PLAN AND NOTES
2. SEE SHEARWALL SCHEDULE AND NOTES
3. 3" S, ¼" PLATE WASHER EA. ANCHOR BOLT
4. REFER TO PROJECT SOILS REPORT

CONTINUOUS INT. FOOTING (2)

N.T.S.

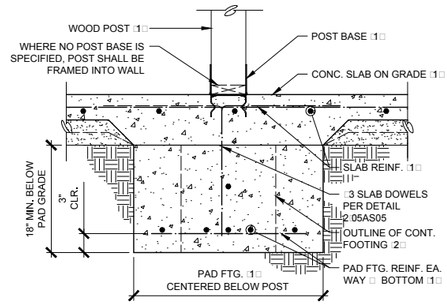

NOTES
1. SEE FRAMING/FOUNDATION PLAN AND NOTES
2. CONTINUE TYPICAL FOOTING REINF. THROUGH PAD FOOTING

INTERIOR PAD FOOTING (3)

N.T.S.

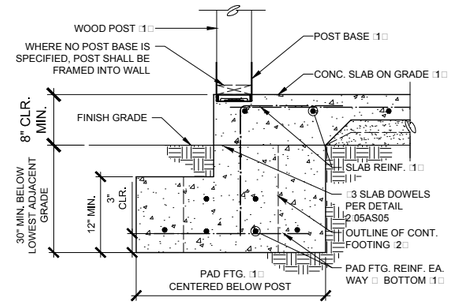

NOTES
1. SEE FRAMING/FOUNDATION PLAN AND NOTES
2. CONTINUE TYPICAL FOOTING REINF. THROUGH PAD FOOTING

EXTERIOR PAD FOOTING (4)

N.T.S.

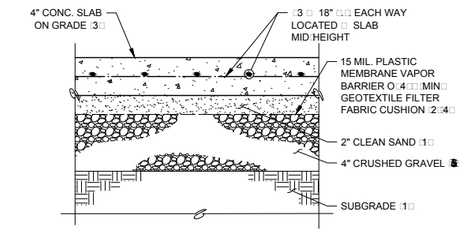

NOTES
1. SUBGRADE SHALL BE PREPARED AS PER MINIMUM REQUIREMENTS OF THE PROJECT SOILS REPORT
2. SEE PROJECT SOILS REPORT
3. SEE DETAIL 03/05AS06 FOR SLAB CONTROL JOINT
4. CARE SHALL BE TAKEN TO PROPERLY SEAL AND LAP THE VAPOR BARRIER, AND TO AVOID PUNCTURING
5. ASTM C33, GRADE 67 CRUSHED, ANGULAR GRAVEL PER PROJECT SOILS REPORT

SLAB ON GRADE (5)

N.T.S.

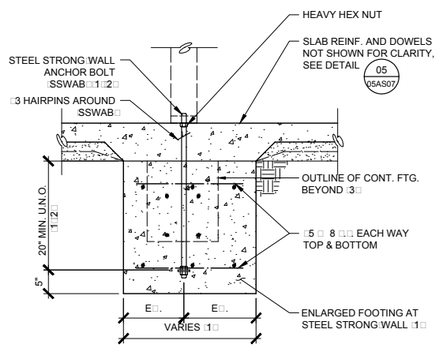

SECTION

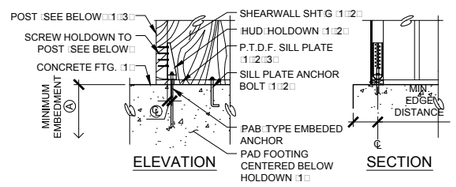

ELEVATION SECTION

HOLDOWN 4	POST SCREWS 6	MIN. POST WIDTH 5	ANCHOR BOLT 4			EDGE DIS.
			DIAM.	Ⓐ	MODEL	
HDU14	36	6 6	1"Ø	12"	PAB8	18"

NOTES
1. SEE FRAMING/FOUNDATION PLAN AND NOTES
2. SEE SHEARWALL SCHEDULE AND NOTES
3. MEMBER TO RECEIVE SHEARWALL PLYWOOD EDGE NAILING, FULL LENGTH
4. SEE CURRENT EDITION OF THE SIMPSON STRONG TIE CATALOG
5. MINIMUM POST SIZE, UNLESS NOTED OTHERWISE ON THE FOUNDAITON, FRMG PLAN OR SHEARWALL SCHEDULE
6. USE SIMPSON SDS ¼" 2½" WOOD SCREWS

PAB A.B. AT HOLDOWN (7)

N.T.S.

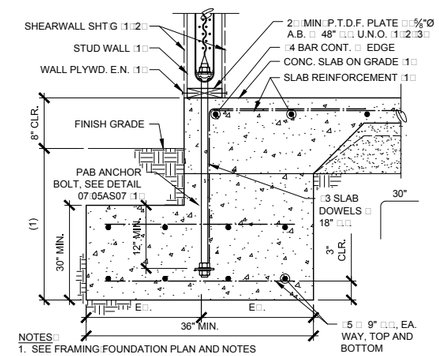

NOTES
1. SEE FRAMING/FOUNDATION PLAN AND NOTES
2. SEE SHEARWALL SCHEDULE AND NOTES
3. REFER TO PROJECT SOILS REPORT

CONTINUOUS EXT. FOOTING (8)

N.T.S.

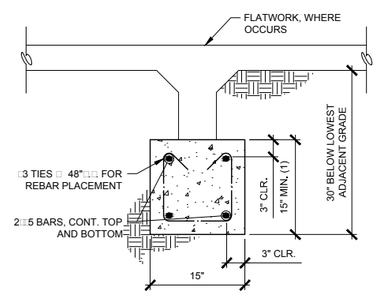

NOTES
1. SEE FOUNDATION PLAN AND NOTES

CONCRETE TIE BEAM (9)

N.T.S.

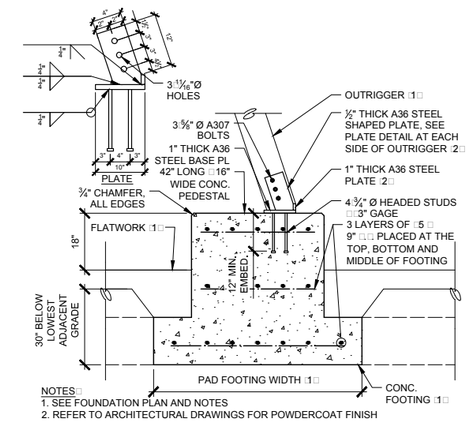

NOTES
1. SEE FOUNDATION PLAN AND NOTES
2. REFER TO ARCHITECTURAL DRAWINGS FOR POWDERCOAT FINISH

FOOTING AT TAPERED COL. (10)

N.T.S.

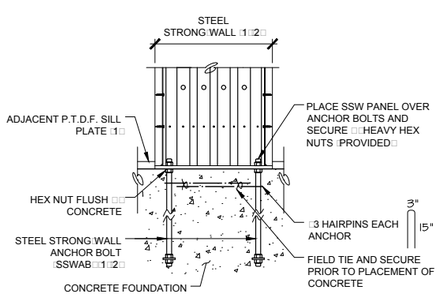

ELEVATION

NOTES
1. SEE FRAMING/FOUNDATION PLAN AND NOTES
2. SEE STRONG WALL SCHEDULE AND NOTES
3. CONTINUE TYPICAL HORI FOOTING REINF. THROUGH ENLARGED FOOTING

STL. STRONG WALL BASE (6)

N.T.S.

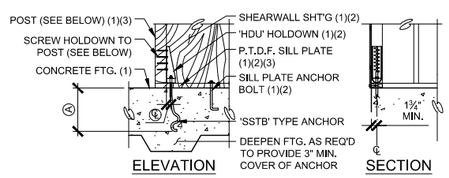

ELEVATION SECTION

HOLDOWN (4)	POST SCREWS(7)	MIN. POST WIDTH (5)	ANCHOR BOLT (6)			Ⓔ
			DIAM.	Ⓐ	MODEL (6)	
HDU2	6	DBL. 2x	⅝"Ø	21"	SSTB24	1 5/16"
HDU5	14	4x	⅝"Ø	21"	SSTB24	1 5/16"
HDU8	20	4x	⅞"Ø	25"	SSTB34	1⅜"

NOTES:
1. SEE FRAMING/FOUNDATION PLAN AND NOTES
2. SEE SHEARWALL SCHEDULE AND NOTES
3. MEMBER TO RECEIVE SHEARWALL PLYWOOD EDGE NAILING, FULL LENGTH
4. SEE CURRENT EDITION OF THE SIMPSON 'STRONG-TIE' CATALOG
5. MINIMUM POST SIZE, UNLESS NOTED OTHERWISE ON THE FOUNDATION, FRM'G PLAN OR SHEARWALL SCHEDULE
6. WHERE 3x SILL PLATE IS USED, PROVIDE 'SSTBL' MODEL
7. USE SIMPSON SDS ¼" x 2½" WOOD SCREWS

'HDU' TYPE HOLDOWN (11)

N.T.S.

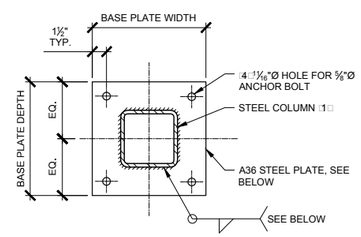

COLUMN SIZE	BASE PLATE THICKNESS	BASE PLATE WIDTH	BASE PLATE DEPTH	WELD SIZE
HSS5 5 ¼"	¾"	10"	10"	3/16"

NOTES
1. SEE FRAMING/FOUNDATION PLAN AND NOTES

STEEL COLUMN BASE PLATE (12)

N.T.S.

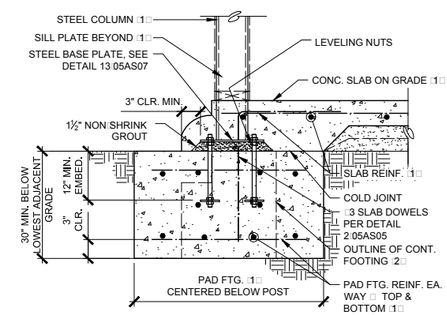

NOTES
1. SEE FRAMING/FOUNDATION PLAN AND NOTES
2. CONTINUE TYPICAL FOOTING REINF. THROUGH PAD FOOTING

EXTERIOR PAD FOOTING (13)

N.T.S.

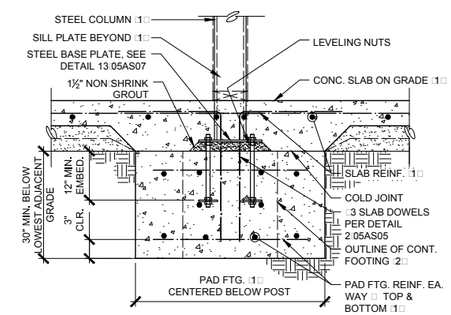

NOTES
1. SEE FRAMING/FOUNDATION PLAN AND NOTES
2. CONTINUE TYPICAL FOOTING REINF. THROUGH PAD FOOTING

INTERIOR PAD FOOTING (14)

N.T.S.

REV	DATE	BY	DESCRIPTION

DESIGNED JMM
DRAWN NWK
CHECKED MFS
DATE SEPTEMBER 2013

REGISTERED PROFESSIONAL ENGINEER MICHAEL F SMITH NO. 35470 CIVIL STATE OF CALIFORNIA

SMITH STRUCTURAL GROUP, LLP
811 El Capitan Way, Suite 240 | 805.439.2110
San Luis Obispo, CA 93401 | smithstructural.com

carollo

SAN LUIS OBISPO COUNTY

SAN LUIS OBISPO COUNTY
LOS OSOS WATER RECYCLING FACILITY PROJECT
STRUCTURAL
ADMINISTRATION BUILDING
STRUCTURAL DETAILS

VERIFY SCALES
BAR IS ONE INCH ON ORIGINAL DRAWING
0 1"
IF NOT ONE INCH ON THIS SHEET, ADJUST SCALES ACCORDINGLY

JOB NO. 8930A.11
DRAWING NO. 05AS07
SHEET NO. XXX OF XXX

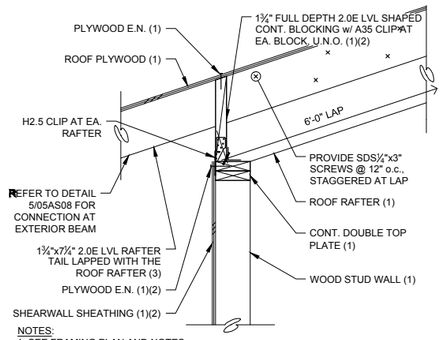

NOTES:
1. SEE FRAMING PLAN AND NOTES
2. SEE SHEARWALL SCHEDULE AND NOTES
3. WHERE RAFTER DEPTH IS 7¼", RAFTER MAY RUN CONTINUOUS

RAFTER AT BEARING WALL (1)

N.T.S.

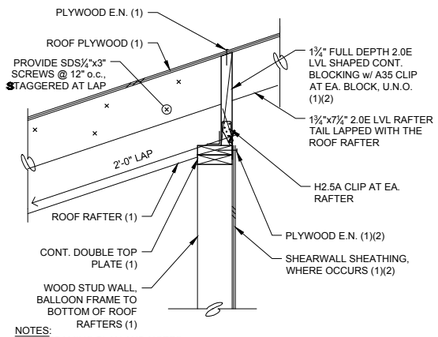

NOTES:
1. SEE FRAMING PLAN AND NOTES
2. SEE SHEARWALL SCHEDULE AND NOTES

RAFTER AT BEARING WALL (2)

N.T.S.

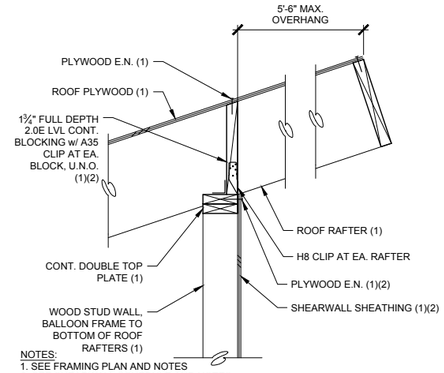

NOTES:
1. SEE FRAMING PLAN AND NOTES
2. SEE SHEARWALL SCHEDULE AND NOTES

RAFTER AT BEARING WALL (3)

N.T.S.

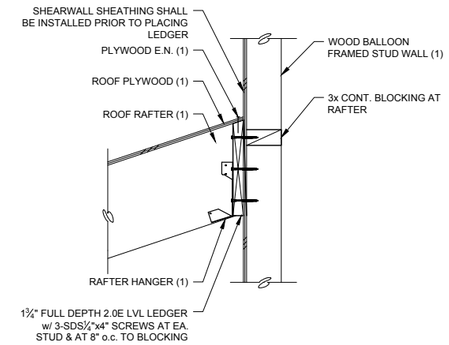

NOTES:
1. SEE FRAMING PLAN AND NOTES

RAFTER AT BEARING WALL (4)

N.T.S.

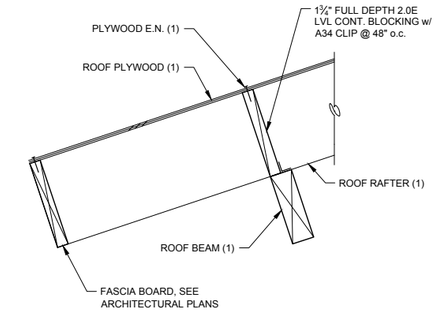

NOTES:
1. SEE FRAMING PLAN AND NOTES

RAFTER AT BEAM (5)

N.T.S.

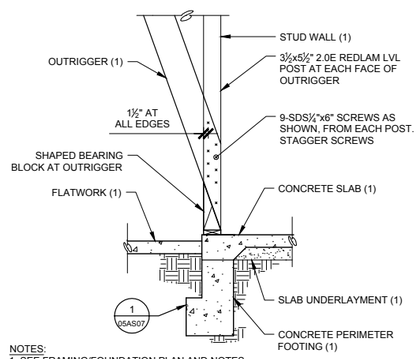

NOTES:
1. SEE FRAMING/FOUNDATION PLAN AND NOTES

OUTRIGGER AT BUILDING (6)

N.T.S.

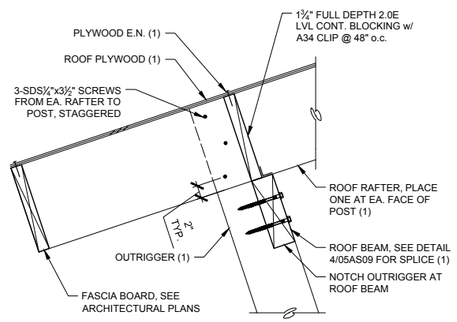

NOTES:
1. SEE FRAMING PLAN AND NOTES

EXT. OUTRIGGER AT BEAM (7)

N.T.S.

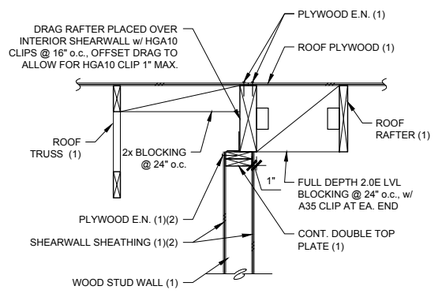

NOTES:
1. SEE FRAMING PLAN AND NOTES
2. SEE SHEARWALL SCHEDULE AND NOTES

RAFTER OVER SHEARWALL (8)

N.T.S.

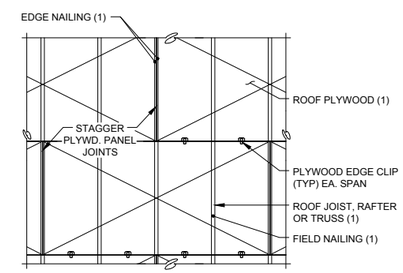

NOTES:
1. SEE FRAMING PLAN AND NOTES

PLYWOOD SHEATHING (9)

N.T.S.

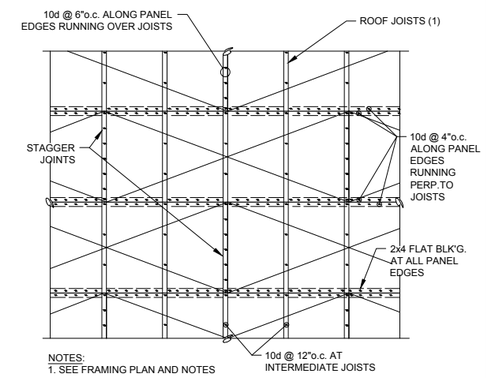

NOTES:
1. SEE FRAMING PLAN AND NOTES

PLYWD SHEATHING-BLK'D (10)

N.T.S.

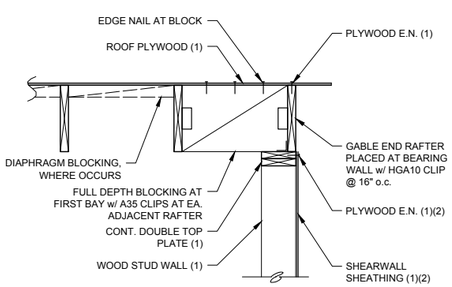

NOTES:
1. SEE FRAMING PLAN AND NOTES
2. SEE SHEARWALL SCHEDULE AND NOTES

RAFTER AT BEARING WALL (11)

N.T.S.

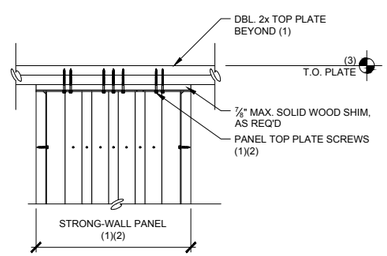

NOTES:
1. SEE FRAMING PLAN AND NOTES
2. SEE STRONGWALL SCHEDULE AND NOTES
3. VERIFY WITH ARCHITECTURAL DRAWINGS

TYP. STL. STRONG-WALL (12)

N.T.S.

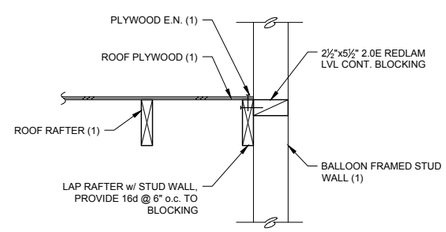

NOTES:
1. SEE FRAMING PLAN AND NOTES

WALL FRAMING (13)

N.T.S.

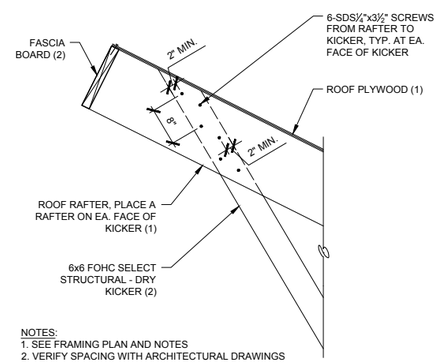

NOTES:
1. SEE FRAMING PLAN AND NOTES
2. VERIFY SPACING WITH ARCHITECTURAL DRAWINGS

KICKER FRAMING (14)

N.T.S.

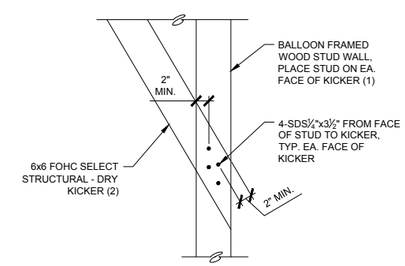

NOTES:
1. SEE FRAMING PLAN AND NOTES
2. VERIFY SPACING WITH ARCHITECTURAL DRAWINGS

KICKER FRAMING (15)

N.T.S.

REV	DATE	BY	DESCRIPTION

DESIGNED JMM
DRAWN NWK
CHECKED MFS
DATE SEPTEMBER 2013

REGISTERED PROFESSIONAL ENGINEER MICHAEL F. SMITH No. 35410 CIVIL STATE OF CALIFORNIA

SMITH STRUCTURAL GROUP, LLP
811 El Capitan Way, Suite 240 | 805.439.2110
San Luis Obispo, CA 93401 | smithstructural.com

carollo®

SAN LUIS OBISPO COUNTY

SAN LUIS OBISPO COUNTY
LOS OSOS WATER RECYCLING FACILITY PROJECT
STRUCTURAL
ADMINISTRATION BUILDING
STRUCTURAL DETAILS

VERIFY SCALES
BAR IS ONE INCH ON ORIGINAL DRAWING
0 1"
IF NOT ONE INCH ON THIS SHEET, ADJUST SCALES ACCORDINGLY

JOB NO. 8930A.11
DRAWING NO. 05AS08
SHEET NO. XXX OF XXX

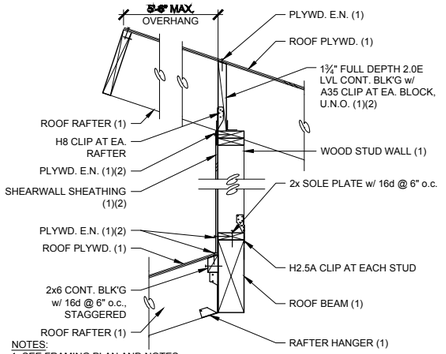

NOTES:
1. SEE FRAMING PLAN AND NOTES
2. SEE SHEARWALL SCHEDULE AND NOTES

CLEAR STORY FRAMING (1)

N.T.S.

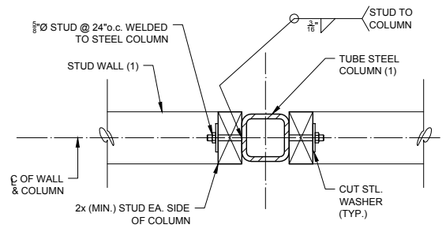

NOTES:
1. SEE FRAMING PLAN AND NOTES

TYP. COLUMN IN WALL (2)

N.T.S.

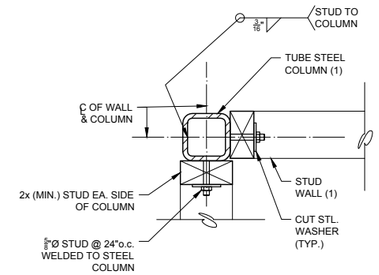

NOTES:
1. SEE FRAMING PLAN AND NOTES

TYP. COLUMN IN WALL (3)

N.T.S.

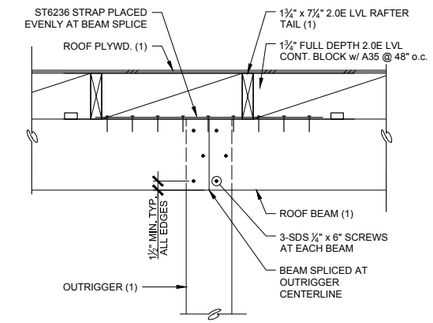

NOTES:
1. SEE FRAMING PLAN AND NOTES

BEAM SPLICE (4)

N.T.S.

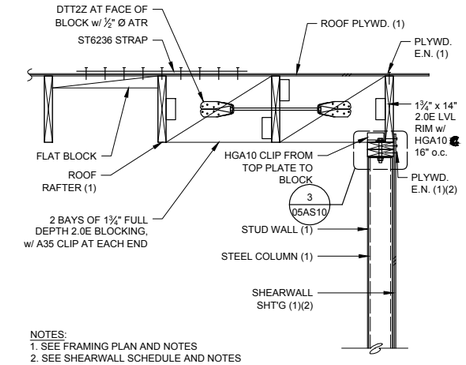

NOTES:
1. SEE FRAMING PLAN AND NOTES
2. SEE SHEARWALL SCHEDULE AND NOTES

WALL FRAMING (5)

N.T.S.

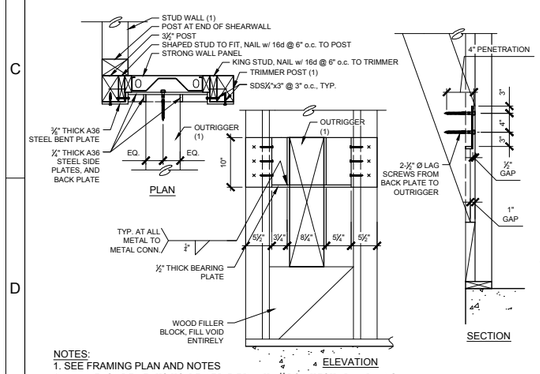

NOTES:
1. SEE FRAMING PLAN AND NOTES
2. ALL MEASUREMENTS TO BE VERIFIED WITH ARCHITECTURAL PLANS

OUTRIGGER AT STRONGWALL (6)

N.T.S.

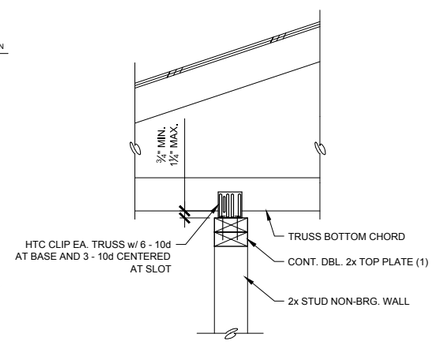

NOTES:
1. SEE FRAMING PLAN AND NOTES

NON BEARING WALL (7)

N.T.S.

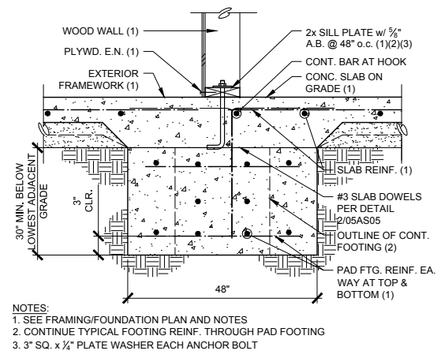

NOTES:
1. SEE FRAMING/FOUNDATION PLAN AND NOTES
2. CONTINUE TYPICAL FOOTING REINF. THROUGH PAD FOOTING
3. 3" SQ. x ¼" PLATE WASHER EACH ANCHOR BOLT

EXTERIOR CONT. FOOTING (8)

N.T.S.

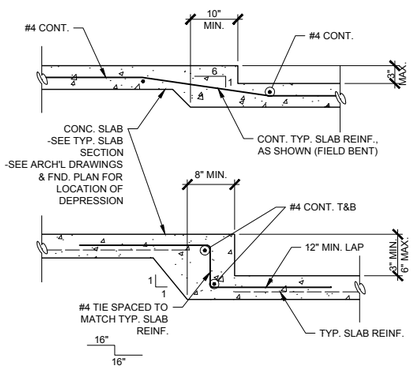

TYP. DEPRESSED SLAB (9)

N.T.S.

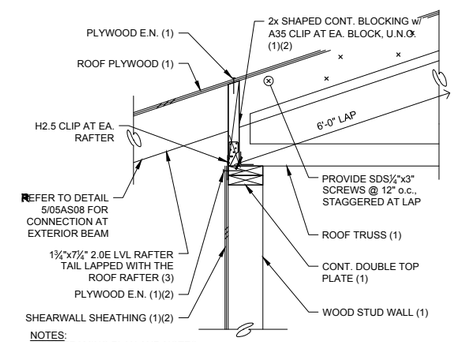

NOTES:
1. SEE FRAMING PLAN AND NOTES
2. SEE SHEARWALL SCHEDULE AND NOTES
3. WHERE RAFTER DEPTH IS 7¼", RAFTER MAY RUN CONTINUOUS

RAFTER AT BEARING WALL (10)

N.T.S.

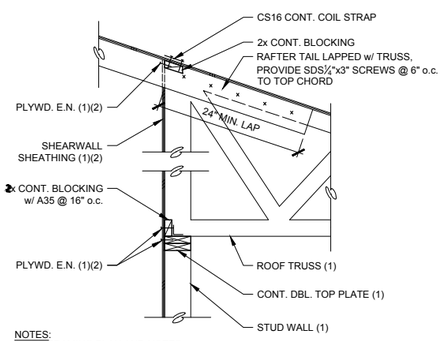

NOTES:
1. SEE FRAMING PLAN AND NOTES
2. SEE SHEARWALL SCHEDULE AND NOTES

INTERIOR BEARING WALL (11)

N.T.S.

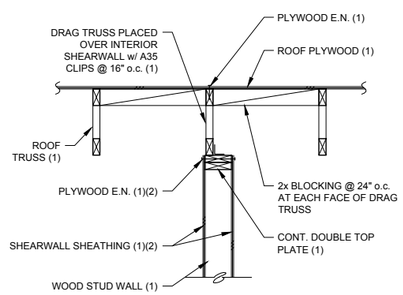

NOTES:
1. SEE FRAMING PLAN AND NOTES
2. SEE SHEARWALL SCHEDULE AND NOTES

TRUSSES OVER SHEARWALL (12)

N.T.S.

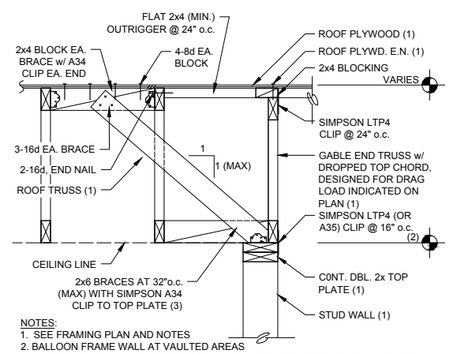

NOTES:
1. SEE FRAMING PLAN AND NOTES
2. BALLOON FRAME WALL AT VAULTED AREAS
3. WHERE KICKER LENGTH EXCEEDS 8'-0", PROVIDE SPACED DOUBLE 2x6 KICKER, WITH 3x6 MID-SUPPORT SPACER

GABLE END TRUSS (13)

N.T.S.

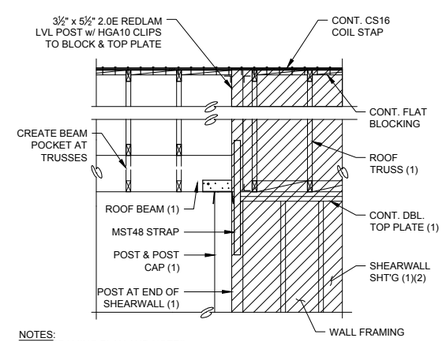

NOTES:
1. SEE FRAMING PLAN AND NOTES
2. SEE SHEARWALL SCHEDULE AND NOTES

WALL FRAMING (14)

N.T.S.

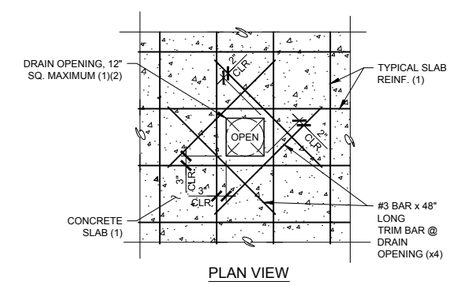

PLAN VIEW

NOTES:
1. SEE FOUNDATION PLAN AND NOTES
2. SEE ARCHITECTURAL PLANS

OPENING IN S.O.G. (15)

N.T.S.

REV	DATE	BY	DESCRIPTION

DESIGNED JMM
DRAWN NWK
CHECKED MFS
DATE SEPTEMBER 2013

REGISTERED PROFESSIONAL ENGINEER MICHAEL F. SMITH NO. 35410 CIVIL STATE OF CALIFORNIA

SMITH STRUCTURAL GROUP, LLP
811 El Capitan Way, Suite 240 | 805.439.2110
San Luis Obispo, CA 93401 | smithstructural.com

carollo

SAN LUIS OBISPO COUNTY

SAN LUIS OBISPO COUNTY
LOS OSOS WATER RECYCLING FACILITY PROJECT
STRUCTURAL
ADMINISTRATION BUILDING
STRUCTURAL DETAILS

VERIFY SCALES
BAR IS ONE INCH ON ORIGINAL DRAWING
0 1"
IF NOT ONE INCH ON THIS SHEET, ADJUST SCALES ACCORDINGLY

JOB NO. 8930A.11
DRAWING NO. 05AS09
SHEET NO. XXX OF XXX

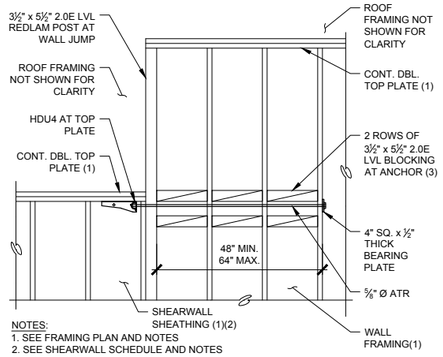

NOTES:
1. SEE FRAMING PLAN AND NOTES
2. SEE SHEARWALL SCHEDULE AND NOTES
3. TO BE EDGE NAIL, CONTINUOUSLY

WALL TIE (1)

N.T.S.

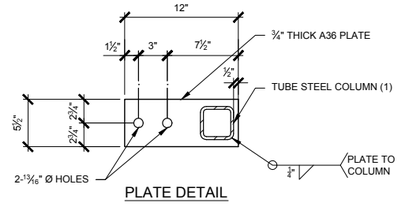

PLATE DETAIL

NOTES:
1. SEE FRAMING PLAN AND NOTES

COLUMN CAP (2)

N.T.S.

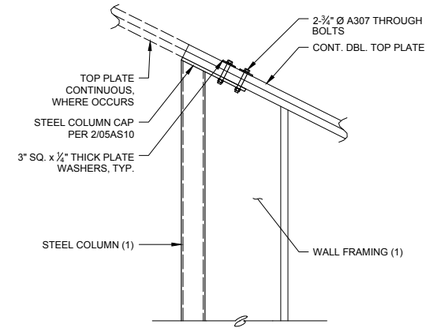

NOTES:
1. SEE FRAMING/FOUNDATION PLAN AND NOTES

STEEL COL. CONNECTION (3)

N.T.S.

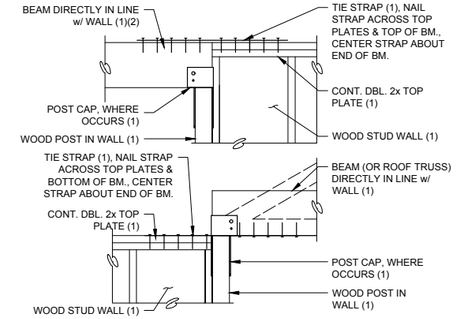

NOTES:
1. SEE FRAMING PLAN AND NOTES
2. ADJACENT FRAMING NOT SHOWN FOR CLARITY

TYPICAL STRAP/TIE (4)

N.T.S.

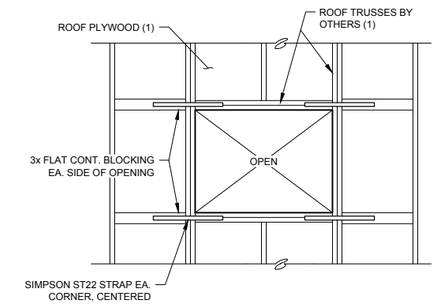

NOTES:
1. SEE FRAMING PLAN AND NOTES

ROOF PENETRATION (5)

N.T.S.

REV	DATE	BY	DESCRIPTION

DESIGNED JMM
DRAWN NWK
CHECKED MFS
DATE SEPTEMBER 2013

REGISTERED PROFESSIONAL ENGINEER MICHAEL F. SMITH NO. 35410 CIVIL STATE OF CALIFORNIA

SMITH STRUCTURAL GROUP, LLP
811 El Capitan Way, Suite 240 | 805.439.2110
San Luis Obispo, CA 93401 | smithstructural.com

carollo®

SAN LUIS OBISPO COUNTY

SAN LUIS OBISPO COUNTY
LOS OSOS WATER RECYCLING FACILITY PROJECT
STRUCTURAL
ADMINISTRATION BUILDING
STRUCTURAL DETAILS

VERIFY SCALES
BAR IS ONE INCH ON ORIGINAL DRAWING
0 1"
IF NOT ONE INCH ON THIS SHEET, ADJUST SCALES ACCORDINGLY

JOB NO. 8930A.11
DRAWING NO. 05AS10
SHEET NO. XXX OF XXX

PLUMBING GENERAL NOTES

1. All work shown herein shall comply with the requirements of the following codes:
   - 2010 California Administrative Code (CAC): Part 1, Title 24, California Code of Regulations (CCR)
   - 2010 California Building Code (CBC): Part 2, Title 24 CCR
   - 2010 California Electrical Code (CEC): Part 3, Title 24 CCR
   - 2010 California Mechanical Code (CMC): Part 4, Title 24 CCR
   - 2010 California Plumbing Code (CPC): Part 5, Title 24 CCR
2. Contractors are referred to the specifications of the project for more detailed and additional requirements.
3. Furnish all labor, materials, transportation, and perform all required operations to provide a complete and operable system, in accordance with the full intent and meaning of the Drawings, Specifications, and per standard trade practices.
4. The installation of piping and equipment shall be made in such a manner to clear beams and obstructions. Do not cut into or reduce the size of plates or any load carrying members without approval of the Architect. Check drawings and work of others to prevent interference.
5. All plumbing fixtures, fittings and piping shall be "lead–free" per California AB1953 and meet the requirements of ANSI/NSF 61, Section 9.
6. Plumbing fixtures and faucets shall comply with 20% water reduction and material standards per 2010 California Green Standards Code (CGBSC)
7. All locations of piping and equipment are shown diagrammatically. Adhere to locations as closely as possible. Vary runs or arrangement of piping as required to meet structural and other interferences or as required by Architect.
8. Pipe sizes shown on drawings shall be installed as shown. Branch line sizes to fixtures when not indicated shall be per minimum branch line size as indicated on fixture schedule. Equipment and appliance supply piping shall be as indicated on drawings. Contractor shall verify size of equipment or appliance connection and provide reducing fittings to suit.
9. No product will be accepted on the job site without prior approval by the Architect. The Contractor shall submit catalog sheets of all plumbing equipment.
10. Rough–in and/or install plumbing fixtures at heights indicated on plans, or as directed by Architect. If a conflict in fixture location is noted on the drawings, the architectural drawings shall take precedence.
11. Contractor shall set shower valve mechanical stops to deliver a maximum mixed water temperature of 120°F.
12. This Contract is funded in whole or in part using funds from the American Recovery and Reinvestment Act (ARRA). Section 1605 of the ARRA prohibits the use of these funds unless all iron, steel, and manufactured goods are produced in the United States. All iron and steel manufacturing processes must take place in the United States, except for metallurgical processes involving refinement of steel additives. There is no requirement for the origin of components and subcomponents of manufactured goods. Products listed at 48 CFR 25.104(a) have been determined to be unavailable in the United States and if required for the Project may be purchased from foreign sources. No unauthorized use of foreign iron, steel, and/or manufactured goods will be allowed on this Project.

MANDATORY TITLE 24 MEASURES

Service Water Heating Systems

1. Service water heating systems and equipment may be installed only if the manufacturer has certified that the system or equipment complies with all the requirements of section 113 of the Energy Efficiency Standards.
2. Service water–heating systems shall be equipped with automatic temperature controls capable of adjustment from the lowest to the highest acceptable temperature settings for the intended use as listed in Table 3, Chapter 50 of the 2011 ASHRAE Handbook, HVAC Applications Volume.
3. If a circulating hot water system is installed, it shall have a control capable of automatically turning off the circulating pump(s) when hot water is not required.
4. Lavatories in restrooms of public facilities shall be equipped with controls to limit the outlet temperature to 110°F.

UTILITY SIZING

DOMESTIC WATER SERVICE

TOTAL WSFU	FT/FV	GPM	PIPE SIZE	METER SIZE	STREET PSI	REGULATED PSI	PSI/100' FRICTION
35	FT	22	1–1/4"	1"	65	NA	8.0

MAXIMUM FIXTURE UNITS ALLOWED	PIPE	1/2"	3/4"	1"	1 1/4"	1 1/2"	2"	2 1/2"	3"
	HOT WATER (5 FPS MAX.)	2	7	17	–	–	–	–	–
	COLD WATER (8 FPS MAX.)	3	11	25	55	–	–	–	–
	FLUSH VALVES (8 FPS MAX.)	–	–	–	14	–	–	–	–

Piping sized per 2010 California Plumbing Code

SEWER LINE

TOTAL DFU	PIPE SIZE	BUILDING DRAIN SLOPE	BUILDING SEWER SLOPE
33	4"	2%	SEE CIVIL PLANS

Piping sized per 2010 California Plumbing Code

GAS SERVICE

MBTUHS				DISTANCE: METER TO FARTHEST APPLIANCE	PIPE SIZE
SPACE HEAT	WATER HEAT	OTHER	TOTAL		
200	180	16	396	62	1–1/4"

Piping sized per 2010 California Plumbing Code

WATER HEATER SCHEDULE

MARK	MAKE	MODEL	STORAGE CAPACITY (GALLONS)	DIMENSIONS	FULL WEIGHT (POUNDS)	INLET/ OUTLET (INCHES)	POWER VOLTS	POWER PH	POWER CY	KW	KBTUH	BRANCH SIZE (INCHES)	FLUE SIZE (INCHES)	REMARKS
WH–1	NAVIEN	NR–210A	0	17"x28"x15"	86	3/4"	120	1	60	SEE 1	180	1"	3"	–
WH–2	BRADFORD WHITE	LD–20U3–1	19	25"x18"ø	217	3/4"	120	1	60	3.0	–	–	–	

1. 2 AMP MAX.

PLUMBING FIXTURE SCHEDULE

MARK	DESCRIPTION	MIN. BRANCH SIZE (") W	V	CW	HW	MAKE AND MODEL	FITTINGS	REMARKS
ESH–1	ADA EMERGENCY SHOWER & EYE/FACE WASH	2	1–1/2	1–1/4	–	HAWS #8309WC SHOWER, 90"x37", GALVANIZED PIPE & ABS BOWL	STOP AND SUPPLY	INSTALL PER ADA REQUIREMENTS
FD–1	FLOOR DRAIN W/ ROUND STRAINER & TRAP PRIMER	2	1–1/2	1/2	–	ZURN #Z415B–2NH–VP–P 5"ø, CAST IRON W/ BRONZE STRAINER	PRECISION PLUMBING PRODUCTS "PRIME–RITE" TRAP PRIMER	
FD–2	FLOOR DRAIN ACID RESISTANT W/TRAP PRIMER	2	1–1/2	1/2	–	ZURN #Z9A–FD2–P, 6"ø, POLYPROPYLENE WITH STAINLESS STEEL STRAINER	PRECISION PLUMBING PRODUCTS "PRIME–RITE" TRAP PRIMER	PROVIDE PEXTUBING FROM TRAP PRIMER TO FLOOR DRAIN
FD–3	FLOOR DRAIN MEDIUM DUTY	3	2	–	–	ZURN #Z507–3NH. 7"ø, CAST IRON		
FS–1	FLOOR SINK W/HALF GRATE	2	1–1/2	–	–	ZURN #Z1900–2NH–2, 12"x12"x6" ENAMELED CAST IRON		
GT–1	GAS TURRET WALL MOUNTED	–	–	–	–		(2) CHICAGO BALL VALVE W/FLANGE GAS: #986–909AGVCP W/GAS INDEX VACUUM: #986–909AGVCP W/VACUUM INDEX	
GT–2	DOUBLE GAS TURRET COUNTER MOUNTED	–	–	–	–		CHICAGO DOUBLE BALL VALVE TURRET GAS: #981–909–957–3KAGV W/GAS INDEX VACUUM: #981–909–957–3KAGV W/VACUUM INDEX	
HB–1	HOSE BIBB WALL MOUNT W/ VACUUM BREAKER	–	–	3/4	–	WOODFORD #24–CH, CHROME PLATED BRASS	PROVIDE W/LOOSE TEE KEY	
HB–2	HOSE BIBB WALL MOUNT W/ VACUUM BREAKER	–	–	3/4	–	WOODFORD #24–3/4–PC, POLISHED CHROME PLATED BRASS	PROVIDE W/LOOSE TEE KEY	
IMS–1	ICE MAKER SUPPLY RECESSED IN WALL	–	–	1/2	–	SPECIALTY PRODUCTS #OB–803, 6–3/4"X 6–3/4"x2–1/2" PLASTIC BOX W/BRASS VALVE		
L–1	ADA LAVATORY UNDER COUNTER MOUNT 0.35 GPM	2	1–1/2	1/2	1/2	ZURN #Z5220, 19" x 16" VITREOUS CHINA, WHITE	CHICAGO FAUCET 2200–4E39VPABCP W/GRID STRAINER, STOPS, SUPPLIES & C.P. BRASS "P" TRAP,	INSTALL PER ADA REQUIREMENTS
L–2	ADA LAVATORY WALL MOUNT 0.35 GPM	2	1–1/2	1/2	1/2	ZURN #Z5344, 20"x 18" VITREOUS CHINA, WHITE	CHICAGO FAUCET 2200–4E39VPABCP W/GRID STRAINER, STOPS, SUPPLIES, C.P. BRASS "P" TRAP, & ZURN WALL SUPPORT Z1231	INSTALL PER ADA REQUIREMENTS
MS–1	MOP SINK FLOOR MOUNTED W/ VACUUM BREAKER	3	2	3/4	3/4	ZURN #Z1996–24–SD–BS–HH–MH–WG, 24"x24"x10" MOLDED STONE	T&S BRASS FAUCET #B–0665–BSTP, PROVIDE WITH DRAIN, RIM GUARD, HOSE, MOP HANGER AND WALL GUARDS	
S–1	ADA DOUBLE BOWL SINK COUNTER TOP W/DISPOSER 1.5 GPM	2	1–1/2	3/4	3/4	ELKAY #LRADQ3321, 33"X21"x6–1/2" 18 GA. STAINLESS	CHICAGO FAUCET #2300–8E34ABCP, STRAINER #LK35, STOPS, SUPPLIES, CP BRASS "P" TRAP & ISE "EVOLUTION COMPACT" DISPOSER	INSTALL PER ADA REQUIREMENTS ELEC. 120V, 3/4 HP, 8.1 AMP
S–2	SINGLE BOWL SINK FAUCET W/VACUUM BREAKER & DI FAUCET	2	1–1/2	1/2	1/2	INTEGRAL SINK, REFER TO ARCHITECTURAL PLANS	CHICAGO FAUCET #930–369CP, CHICAGO DI FAUCET 828–ACP, STOPS, SUPPLIES, POLY P–TRAP	POLY DRAIN OUTLET PROVIDED WITH SINKS
S–3	DOUBLE BOWL SINK FAUCET W/VACUUM BREAKER & DI FAUCET	2	1–1/2	1/2	1/2	INTEGRAL SINK, REFER TO ARCHITECTURAL PLANS	CHICAGO FAUCET #930–369CP, CHICAGO DI FAUCET 828–ACP, STOPS, SUPPLIES, POLY P–TRAP	POLY DRAIN OUTLET(S) PROVIDED WITH SINKS
S–4	DOUBLE BOWL SINK FREESTANDING	2	1–1/2	3/4	3/4	ADVANCE TABCO #6–2–48, 48"x24.5"x33"H, 304 16 GA STAINLESS STEEL	CHICAGO FAUCET #540–LDL8E35ABCP, (2) STAINLESS STEEL BASKET STRAINERS, CP BRASS P–TRAP	
SH–1	ADA SHOWER FIBERGLASS PRESSURE BALANCING	2	1–1/2	3/4	3/4	FLORSTONE #35–62H, 30"x60" INSIDE, 33–1/2"X62" ROUGH–IN, GEL COATED FIBERGLASS	PACKAGE INCLUDES: SYMMONS VALVE, HOSE, HAND SHOWER,SLIDE BAR, GRAB BARS, SEAT, CURTAIN ROD & DRAIN	INSTALL PER ADA REQUIREMENTS, RECESS UNIT FLUSH WITH FLOOR, PROVIDE WITH PHENOLIC SEAT, SEE DETAIL 10/05AP02 FOR CONTROL AND HEAD LOCATIONS
U–1	ADA URINAL WALL MOUNTED SENSOR OPER, 1/8 GPF	2	1–1/2	3/4	–	ZURN #Z5798.205.00, 18–1/2"x14–1/4"x25–5/8", VITREOUS CHINA, WHITE	INCLUDES ZURN SENSOR FLUSH VALVE #ZEG6003EV	INSTALL PER ADA REQUIREMENTS
WC–1	ADA WATER CLOSET FLOOR MOUNTED ELONGATED, 1.28 GPF	3	2	3/4	–	ZURN #Z5555, 29–1/2"x19"x16–1/2" RIM, VITREOUS CHINA, WHITE	STOP, SUPPLY, & ZURN SEAT #Z5955SS–EL,	INSTALL PER ADA REQUIREMENTS (LEFT HAND FLUSH)
WC–2	ADA WATER CLOSET FLOOR MOUNTED ELONGATED, 1.28 GPF	3	2	3/4	–	ZURN #Z5555–RH, 29–1/2"x19"x16–1/2" RIM, VITREOUS CHINA, WHITE	STOP, SUPPLY, & ZURN SEAT #Z5955SS–EL,	INSTALL PER ADA REQUIREMENTS (RIGHT HAND FLUSH)
WC–3	WATER CLOSET FLOOR MOUNTED ELONGATED, 1.28 GPF	3	2	3/4	–	ZURN #Z5535, 29–1/2"x19"x14–1/2" RIM, VITREOUS CHINA, WHITE	STOP, SUPPLY, & ZURN SEAT #Z5955SS–EL,	

PLUMBING LEGEND

SYMBOL	ABBREV.	DESCRIPTION
	BV	BALL VALVE
	CV	CHECK VALVE
	TPV	TRAP PRIMER VALVE
	T&P	TEMPERATURE PRESSURE RELIEF VALVE
	PV	PLUG VALVE (PLAN VIEW)
	CP	CIRCULATOR PUMP
		VALVE IN RISER
	HB	HOSE BIBB
	RHB	RECESSED HOSE BIBB
GM	GM	GAS METER
	FCO	FLOOR CLEANOUT
	COTG	CLEANOUT TO GRADE
WCO	WCO	WALL CLEANOUT
		UNION
		PIPE UP
		PIPE DOWN
		PIPE CONNECTION
		CAPPED/PLUGGED PIPE
		FLOOR DRAIN
	WHA	WATER HAMMER ARRESTOR
	SS	SANITARY SOIL BELOW GRADE
	SS	SANITARY SOIL ABOVE GRADE
AW	AW	ACID WASTE (POLYPROPYLENE)
RWL	RWL	RAIN WATER LEADER
RWO	RWO	RAIN WATER OVERFLOW
CD	CD	CONDENSATE DRAIN
G	NG	NATURAL GAS
F	F	FIRE WATER
	V	SANITARY VENT
AV	AV	ACID VENT (POLYPROPYLENE)
	CW OR W1	COLD WATER
NP	NP OR W2	NON–POTABLE WATER (CLEARLY IDENTIFY ALL PIPING)
	HW	HOT WATER
	HWR	HOT WATER RETURN
TP	TP	TRAP PRIMER LINE
	PW	PLANT WATER
	W1	POTABLE WATER FOR HUMAN CONSUMPTION
	W2	NON–POTABLE WATER FOR PROCESS

EQUIPMENT

VP–1 VACUUM PUMP– Welch DuoSeal 1380B–01, ½ hp, 120v, directional exhaust filter 1417A and inlet water trap w/float ball.

REV	DATE	BY	DESCRIPTION

DESIGNED LM
DRAWN DM
CHECKED LM
DATE SEPT 2013

Brummel, Myrick & Associates
mechanical engineering
100 Cross Street, Suite 204
San Luis Obispo, CA 93401
OFF: (805) 544–4269
FAX:(805) 544–4335
BMA JOB #12198.00

carollo

SAN LUIS OBISPO COUNTY

SAN LUIS OBISPO COUNTY
LOS OSOS WATER RECYCLING FACILITY PROJECT
PLUMBING
ADMINISTRATION & MAINTENANCE BUILDING
SCHEDULES, LEGEND & NOTES

VERIFY SCALES
BAR IS ONE INCH ON ORIGINAL DRAWING
0 1"
IF NOT ONE INCH ON THIS SHEET, ADJUST SCALES ACCORDINGLY

JOB NO. 8930A.11
DRAWING NO. 05AP01
SHEET NO. XXX OF XXX

\\server1\data\Drawings\12\12198.00\plumb\12198.00_05AP01.dwg chriss Sep 09,2013–5:04pm

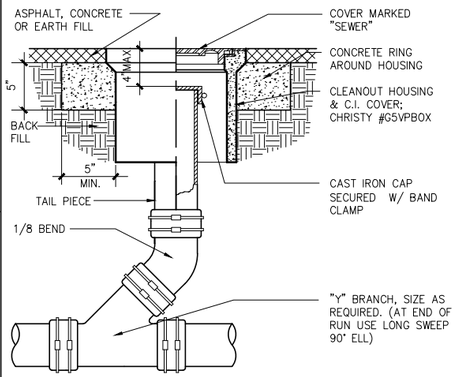

1 CLEANOUT TO GRADE

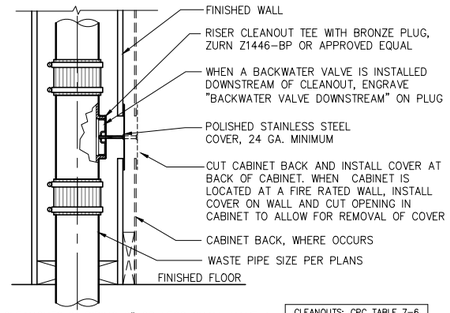

CLEANOUTS IN PIPING 2" OR LESS SHALL HAVE A CLEARANCE OF NOT LESS THAN 12" IN FRONT OF THE CLEANOUT, CLEANOUTS IN PIPING LARGER THAN 2" INCHES SHALL HAVE A CLEARANCE OF NOT LESS THAN 18".

CLEANOUTS: CPC TABLE 7-6	
PIPE SIZE	CLEANOUT SIZE
1½"-2"	1½"
2½"-3"	2½"
4"& LARGER	3½"

2 WALL CLEANOUT

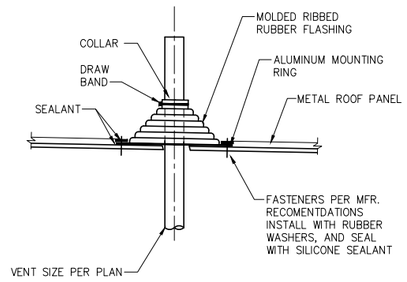

3 VENT THROUGH ROOF

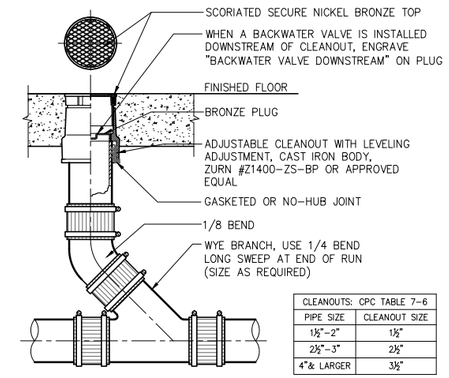

CLEANOUTS: CPC TABLE 7-6	
PIPE SIZE	CLEANOUT SIZE
1½"-2"	1½"
2½"-3"	2½"
4"& LARGER	3½"

4 FLOOR CLEANOUT

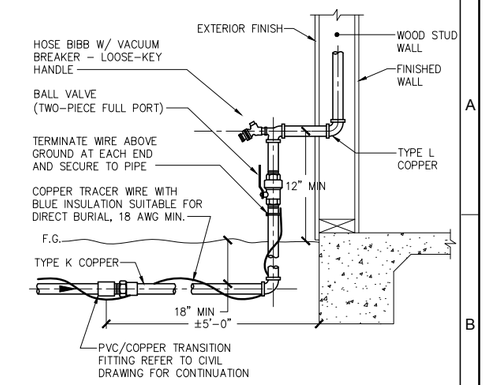

5 BUILDING WATER SUPPLY

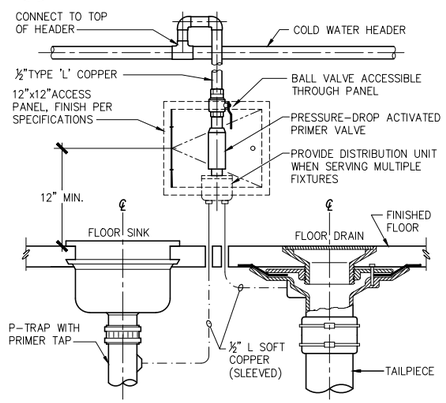

6 TRAP PRIMER

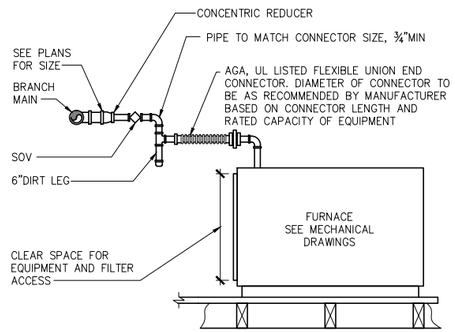

7 GAS CONNECTION

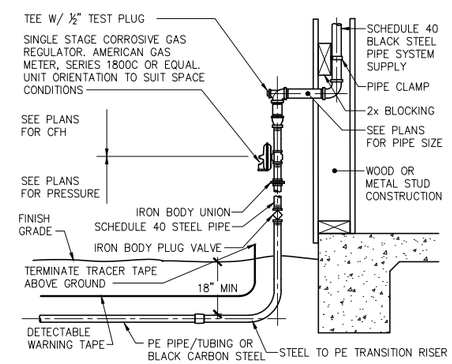

8 GAS SERVICE TO BUILDING

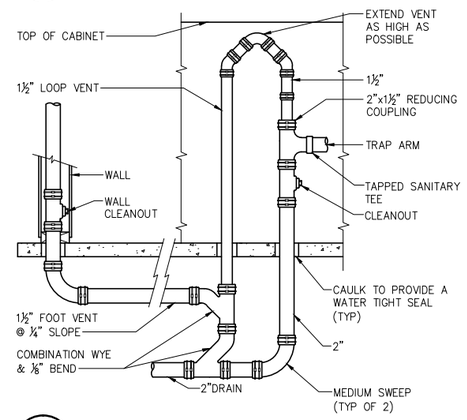

9 ISLAND VENT

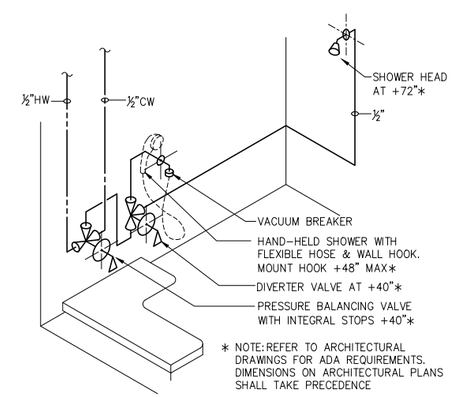

10 ACCESSIBLE SHOWER

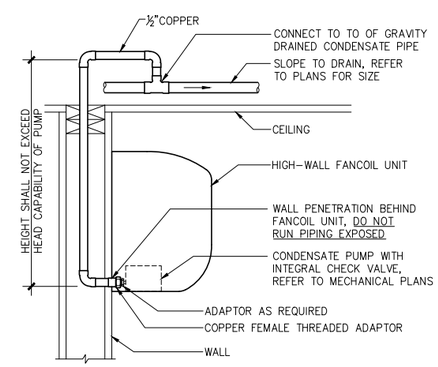

11 FANCOIL CONDENSATE DRAIN

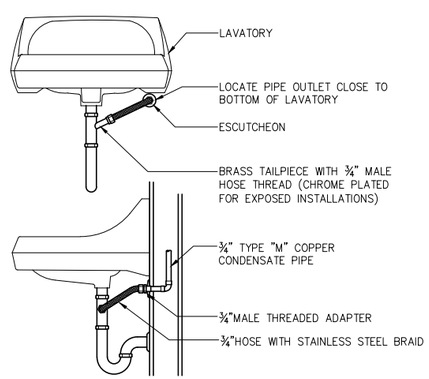

12 CONDENSATE TO TAILPIECE

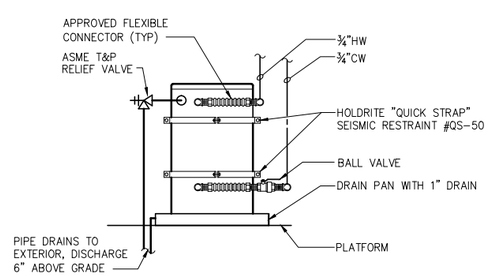

13 WATER HEATER WH-2

REV	DATE	BY	DESCRIPTION

DESIGNED LM
DRAWN DM
CHECKED LM
DATE SEPT 2013

REGISTERED PROFESSIONAL ENGINEER MICHAEL RANDOLPH MYRICK EXP. 6/30/15 MECHANICAL STATE OF CALIFORNIA

Brummel, Myrick & Associates
mechanical engineering
100 Cross Street, Suite 204
San Luis Obispo, CA 93401
OFF: (805) 544-4269
FAX: (805) 544-4335
BMA JOB #12198.00

carollo®

SAN LUIS OBISPO COUNTY

SAN LUIS OBISPO COUNTY

LOS OSOS WATER RECYCLING FACILITY PROJECT

PLUMBING

ADMINISTRATION & MAINTENANCE BUILDING DETAILS

VERIFY SCALES
BAR IS ONE INCH ON ORIGINAL DRAWING
0 1"
IF NOT ONE INCH ON THIS SHEET, ADJUST SCALES ACCORDINGLY

JOB NO. 8930A.11
DRAWING NO. 05AP02
SHEET NO. XXX OF XXX

\\server1\data\Drawings\12\12198.00\plumb\12198.00_05AP02.dwg chriss Sep 09,2013-5:05pm

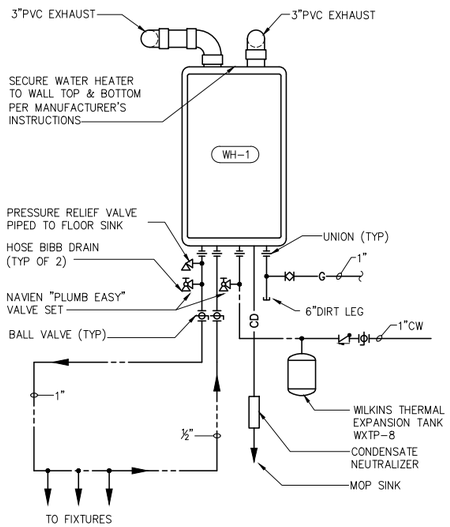

3 WATER HEATER WH-1

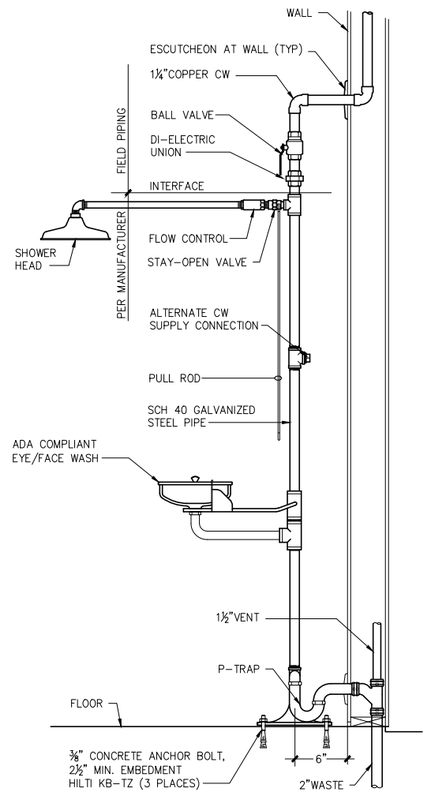

4 EMERGENCY SHOWER/EYEWASH

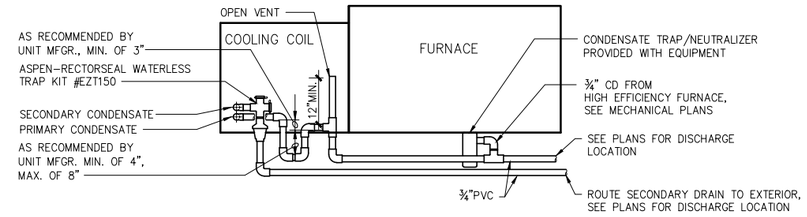

NOTE:
- INSTALL ALL CONDENSATE PIPING, TRAPS, AND OTHER ACCESSORIES PER MANUFACTURER'S INSTALLATION INSTRUCTIONS & AS SPECIFIED ON MECHANICAL DRAWINGS
- ALL PIPING TO BE ¾"PVC SCH 40 PIPE WITH SOLVENT WELD FITTINGS

1 CONDENSATE DRAIN CONNECTIONS

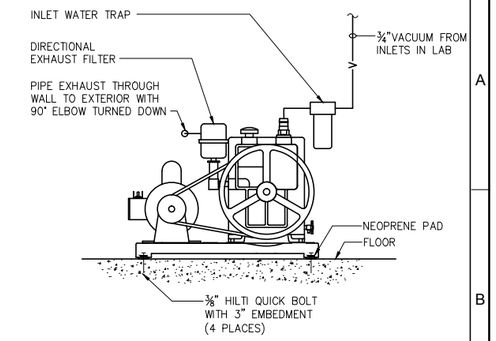

2 VACUUM PUMP

DEIONIZED WATER SYSTEM

DE-1 Deionized water system consisting of a tri-bed tank system of cation, anion and mixed bed resin tanks. Tanks to be rented from Culligan or equal water service company. Provide the following items:

M-1 Signet Pro Point #9900, 0-20 Meg. ohm conductivity monitor; NEMA plastic enclosure 120 to 24v DC/AC, 10w max, sensors, well and accessories.

F-1 Ametek hi-purity 10 inch #150095 filter housing of polypropylene with a Nuclepore .2 sub-micron filter element #QMC-P-10-.2.

Deionized water piping and fittings to be LXT PVC or approved equal. Metallic piping, fittings or accessories are prohibited

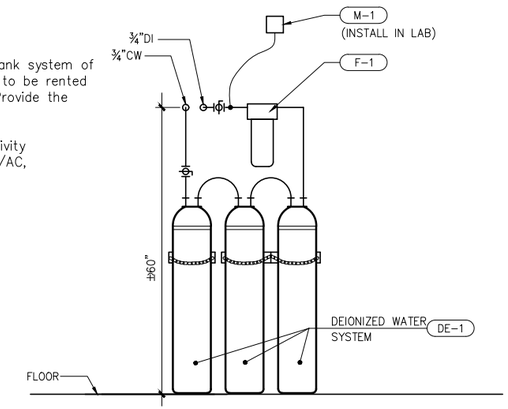

5 DEIONIZED WATER SYSTEM

6 NOT USED

REV	DATE	BY	DESCRIPTION

DESIGNED LM
DRAWN DM
CHECKED LM
DATE SEPT 2013

REGISTERED PROFESSIONAL ENGINEER LINDON ROGERS EXP. 6/30/15 MECHANICAL STATE OF CALIFORNIA

Brummel, Myrick & Associates
mechanical engineering
100 Cross Street, Suite 204
San Luis Obispo, CA 93401
OFF: (805) 544-4269
FAX:(805) 544-4335
BMA JOB #12198.00

carollo®

SAN LUIS OBISPO COUNTY

SAN LUIS OBISPO COUNTY
LOS OSOS WATER RECYCLING FACILITY PROJECT
PLUMBING
ADMINISTRATION & MAINTENANCE BUILDING
DETAILS

VERIFY SCALES
BAR IS ONE INCH ON ORIGINAL DRAWING
0 1"
IF NOT ONE INCH ON THIS SHEET, ADJUST SCALES ACCORDINGLY

JOB NO. 8930A.11
DRAWING NO. 05AP03
SHEET NO. XXX OF XXX

\\server1\data\Drawings\12\12198.00\plumb\12198.00_05AP03.dwg chriss Sep 09,2013-5:05pm

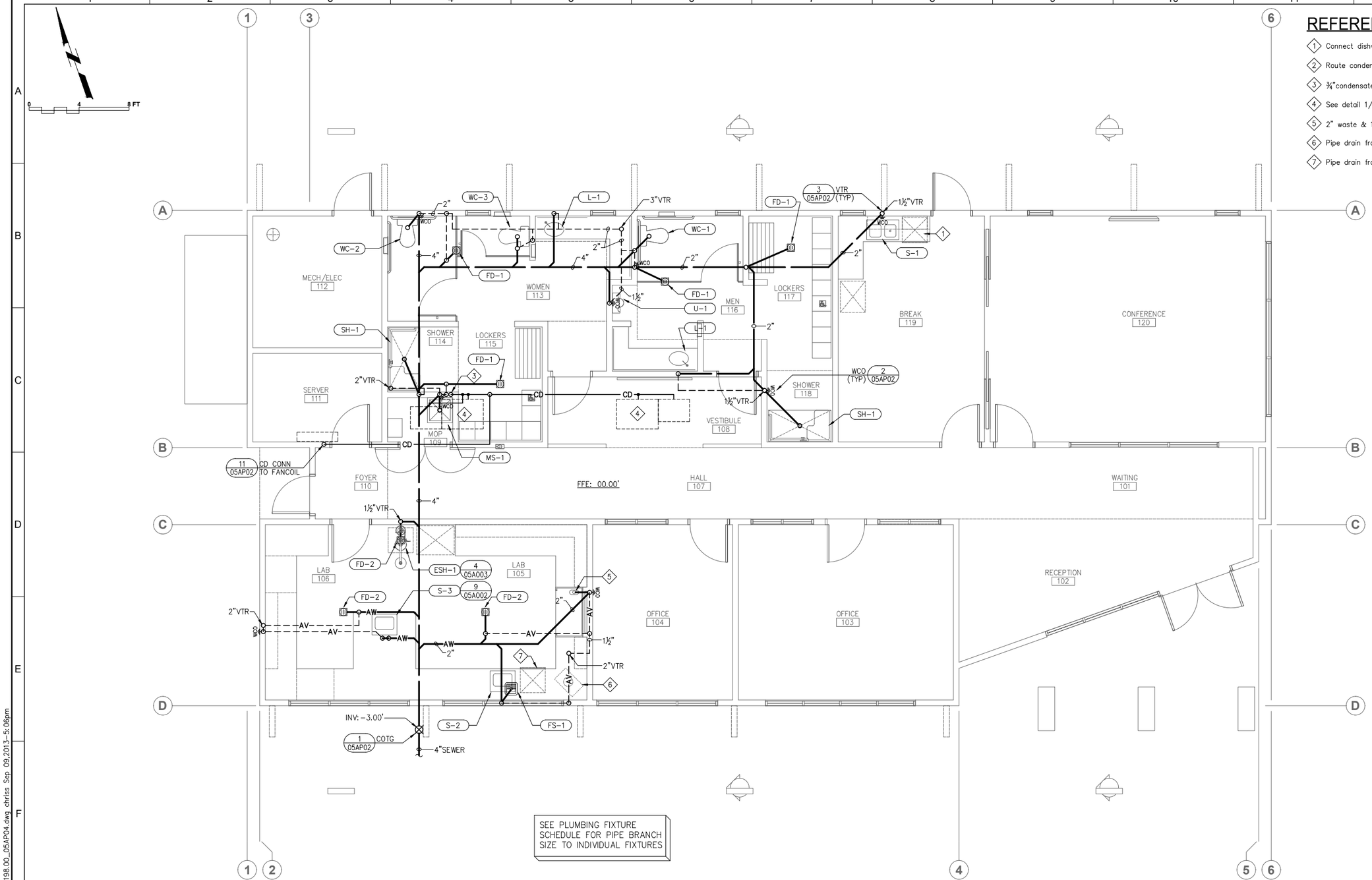

SEE PLUMBING FIXTURE SCHEDULE FOR PIPE BRANCH SIZE TO INDIVIDUAL FIXTURES

REFERENCE NOTES

1. Connect dishwasher to disposer with deck mounted airgap fitting.
2. Route condensate down in wall to drywell.
3. ¾"condensate down in wall to mop sink.
4. See detail 1/05AP03 for condensate connection.
5. 2" waste & 1½" vent to fume hood cup sink.
6. Pipe drain from autoclave through counter and route to floor sink.
7. Pipe drain from glass washer to floor sink.

1 PLUMBING FLOOR PLAN -WASTE & VENT- ADMINISTRATION BUILDING

SCALE:1/4"=1'-0"

REV	DATE	BY	DESCRIPTION

DESIGNED LM
DRAWN DM
CHECKED LM
DATE SEPT 2013

ERIC PROFESSIONAL ENGINEER MECHANICAL STATE OF CALIFORNIA EXP. 6/30/15

Brummel, Myrick & Associates
mechanical engineering
100 Cross Street, Suite 204
San Luis Obispo, CA 93401
OFF: (805) 544-4269
FAX:(805) 544-4335
BMA JOB #12198.00

carollo

SAN LUIS OBISPO COUNTY

SAN LUIS OBISPO COUNTY
LOS OSOS WATER RECYCLING FACILITY PROJECT
PLUMBING
ADMINISTRATION BUILDING
FLOOR PLAN-WASTE & VENT

VERIFY SCALES
BAR IS ONE INCH ON ORIGINAL DRAWING
0 1"
IF NOT ONE INCH ON THIS SHEET, ADJUST SCALES ACCORDINGLY

JOB NO. 8930A.11
DRAWING NO. 05AP04
SHEET NO. XXX OF XXX

\\server1\data\Drawings\12\12198.00\plumb\12198.00_05AP04.dwg chriss Sep 09,2013-5:06pm

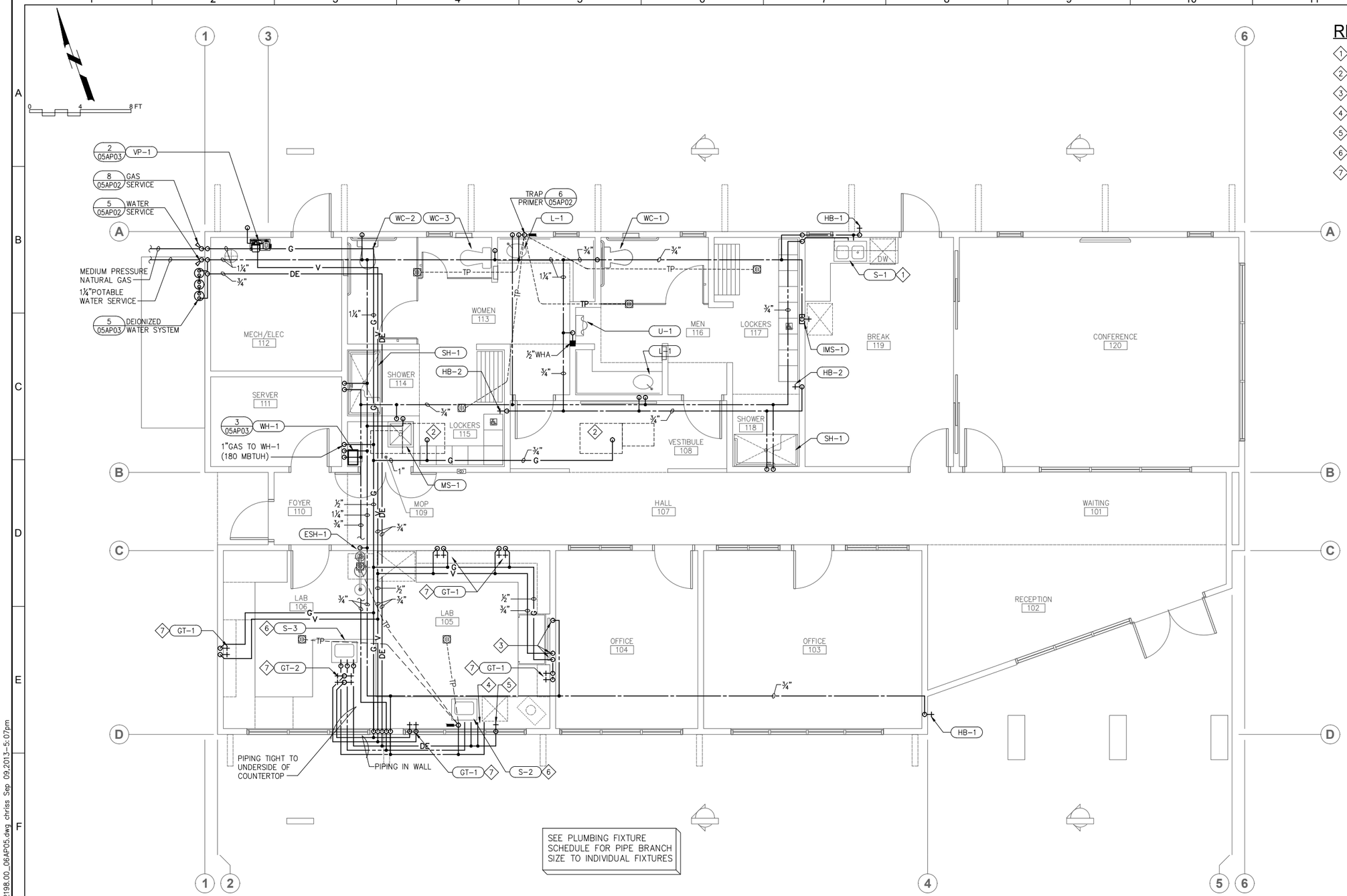

REFERENCE NOTES

1. Provide additional hw stop below sink and connect to dishwasher.
2. ¾"gas to furnace per detail 7/05AP02 (100 mbtuh)
3. ½"cw, ½" gas & ½"vacuum to fume hood. Make connection as required.
4. ½"CW & ½"DI water with stop. Connect to dishwasher.
5. ½"DI water to stop on wall above counter to Type 2 water purifier (DDI Unit).
6. ½"CW, ½"HW & ½"DI water to sink.
7. ½"gas & ½" vacuum to gas turrets.

1 PLUMBING FLOOR PLAN -WATER & GAS - ADMINISTRATION BUILDING

SCALE:1/4"=1'-0"

REV	DATE	BY	DESCRIPTION

DESIGNED LM
DRAWN DM
CHECKED LM
DATE SEPT 2013

REGISTERED PROFESSIONAL ENGINEER RUDOLPH RUDOLPH EXP. 6/30/15 MECHANICAL STATE OF CALIFORNIA

Brummel, Myrick & Associates
mechanical engineering
100 Cross Street, Suite 204
San Luis Obispo, CA 93401
OFF: (805) 544-4269
FAX:(805) 544-4335
BMA JOB #12198.00

carollo

SAN LUIS OBISPO COUNTY

SAN LUIS OBISPO COUNTY

LOS OSOS WATER RECYCLING FACILITY PROJECT

PLUMBING

ADMINISTRATION BUILDING FLOOR PLAN-WATER & GAS

VERIFY SCALES
BAR IS ONE INCH ON ORIGINAL DRAWING
0 1"
IF NOT ONE INCH ON THIS SHEET, ADJUST SCALES ACCORDINGLY

JOB NO. 8930A.11
DRAWING NO. 05AP05
SHEET NO. XXX OF XXX

\server1\data\Drawings\12\12198.00\plumb\12198.00_06AP05.dwg chriss Sep 09,2013-5:07pm

HVAC LEGEND

SYMBOL	ABBREVIATION	DESCRIPTION
		CEILING SUPPLY
		CEILING RETURN
		CEILING EXHAUST
		SIDEWALL DIFFUSER, REGISTER, GRILLE OR LOUVER
		DUCT (RECTANGULAR)
		DUCT (ROUND)
	24x12L	LINED DUCTWORK
		TURNING VANE
		FLEXIBLE DUCT
	FC	FLEXIBLE CONNECTION
	VD	MANUAL AIR VOLUME DAMPER
OAI / 500		OUTSIDE AIR INTAKE / MIN. CFM
T AC-1		ROOM THERMOSTAT – SUBSCRIPT INDICATES UNIT CONTROLLED
S	S	ON/OFF SWITCH OR TEMPERATURE SENSOR
FSC	FSC	FAN SPEED CONTROL
Ø	DIA	DIAMETER
	CEF	CEILING EXHAUST FAN
DL / 1FT²	DL	DOOR LOUVER – SUBSCRIPT INDICATES REQUIRED FREE AREA
		ACCESS CLEARANCE AREA – 30" OR AS REQUIRED BY THE EQUIPMENT MANUFACTURER, WHICH EVER IS GREATER
		REFRIGERATION LINES

HVAC ABBREVIATIONS

AC	AIR CONDITION(-ING,-ED)	GYP	GYPSUM
ABV	ABOVE	HD	HEAD
AFF	ABOVE FINISHED FLOOR	HP	HORSEPOWER
AFUE	ANNUAL FUEL UTILIZATION EFFICIENCY	HZ	HERTZ
AHJ	AUTHORITY HAVING JURISDICTION	IMP	IMPELLER
ALUM	ALUMINUM	IWC	INCHES OF WATER COLUMN
AMB	AMBIENT	KWi	KILOWATT INPUT
ARCH	ARCHITECTURAL	LBS	POUNDS
ARI	AMERICAN REFRIGERATION INSTITUTE	LWT	LEAVING WATER TEMPERATURE
BD	BOARD	MBH	BTU PER HOUR (THOUSAND)
BDD	BACKDRAFT DAMPER	MCA	MINIMUM CIRCUIT AMPS
BEL	BELOW	MFGR	MANUFACTURE OR MANUFACTURER
BHP	BRAKE HORSE POWER	MU/MUA	MAKE UP AIR
BLDG	BUILDING	(N)	NEW
BTUH	BRITISH THERMAL UNIT / HOUR	NOM	NOMINAL
CA	COMBUSTION AIR	NTS	NOT TO SCALE
CAP	CAPACITY	OA	OUTSIDE AIR
CD	CONDENSATE DRAIN	OAI	OUTSIDE AIR INTAKE
CFD	CEILING FIRE DAMPER	OBD	OPPOSED BLADE DAMPER
CFM	CUBIC FEET PER MINUTE	OPT	OPERATING
CONN	CONNECTION	OSHPD	OFFICE OF STATEWIDE HEALTH PLANNING AND DEVELOPMENT
CONT	CONTINUATION	PD	PRESSURE DROP
CSE	CALIFORNIA SEASONAL EFFICIENCY	PSI	POUNDS PER SQUARE INCH
DB	DRY BULB TEMPERATURE	RA	RETURN AIR
DET	DETAIL	REFRIG	REFRIGERANT
DN	DOWN	RM	ROOM
DSA	DEPARTMENT OF THE STATE ARCHITECT	RND	ROUND
(E)	EXISTING	SA	SUPPLY AIR
EA	EXHAUST AIR	SEER	SEASONAL ENERGY EFFICIENCY
EDB	ENTERING DRY BULB TEMPERATURE	SFD	SMOKE FIRE DAMPER
EER	ENERGY EFFICIENCY RATIO	SHT	SHEET
EFF	EFFICIENCY	SM	SHEET METAL
ELEC	ELECTRICAL	SOV	SHUT OFF VALVE
ESP	EXTERNAL STATIC PRESSURE	SP	STATIC PRESSURE
EWB	ENTERING WET BULB	SQ	SQUARE
EWT	ENTERING WATER TEMPERATURE	SS	STAINLESS STEEL
EVAP	EVAPORATOR	SSE	STEADY STATE EFFICIENCY
FA	FACE AREA	SST	SATURATED SUCTION TEMPERATURE
FC	FLEXIBLE CONNECTION	TYP	TYPICAL
FD	FIRE DAMPER	TXV	THERMAL EXPANSION VALVE
FLA	FULL LOAD AMP	UON	UNLESS OTHERWISE NOTED
FPM	FEET PER MINUTE	VD	VOLUME DAMPER
FSC	FAN SPEED CONTROL	WB	WET BULB TEMPERATURE
GA	GAGE OR GAUGE	WC	WATER COLUMN
GALV	GALVANIZED	WG	WATER GAUGE
GPM	GALLONS PER MINUTE	WT	WEIGHT

GAS FURNACE WITH COOLING COIL SCHEDULE

MARK	MAKE	MODEL	TYPE	BTUH CAPACITY INPUT	BTUH CAPACITY OUTPUT	CSE (SSE)	CFM	ESP	FAN SPEED RPM	HP	POWER	FLA	COOLING COIL MODEL	COOLING COIL NOM TONS	COOLING COIL MATCHING COND. UNIT	WEIGHT (LBS.)	REMARKS (SEE BELOW)	MOUNTING DETAIL
F-1	TRANE	TDC1C100	HORZ RT	100,000	94,000	92	1,400	0.80	HIGH	1/2	120-1-60	12.5	–	3-1/2	CU-1	200	SEE NOTE 1	14/05AM02
F-2	TRANE	TUC1D100	HORZ LFT	100,000	93,000	92	1,600	0.90	MED/HIGH	3/4	120-1-60	12.9	–	4	CU-2	200	SEE NOTE 1	14/05AM02

Notes: 1. Provide with 7-day/24-hour programmable thermostat.

AIR-COOLED CONDENSING UNIT SCHEDULE

MARK	MAKE	MODEL	NOM TONS	ELECTRICAL DATA POWER	TOTAL UNIT FLA	MIN CIRC AMPS	MAX FUSE SIZE	ARI PERFORMANCE COOLING BTUH	EER	SEER	REFRIG.	CONNECTIONS LIQUID	SUCTION	OPT. WT.	MATCHING SYSTEM	REMARKS	MOUNTING DETAIL
CU-1	TRANE	4TTB4042	3-1/2	208-1-60	18.83	23	40	43,000	–	14	410	SEE NOTE 1	SEE NOTE 1	250	F-1	–	10/05AM02
CU-2	TRANE	4TTB4048	4	208-1-60	20.83	26	45	48,000	–	14	410	SEE NOTE 1	SEE NOTE 1	250	F-2	–	10/05AM02

Notes: 1. Size refrigeration piping for total developed pipe length.

EXHAUST FAN SCHEDULE

MARK	MAKE	MODEL	TYPE	FAN CFM	FAN SP	FAN RPM	FAN SONES	FAN DRIVE	MOTOR WATT (HP)	MOTOR POWER	ACCESSORIES BIRD GUARD	BACKDRAFT DAMPER	ROOF CURB	ROOF JACK	WALL CAP	WEIGHT (LBS.)	REMARKS (SEE BELOW)	MOUNTING DETAIL
EF-1	GREENHECK	GB103VG	DOWN BLAST	850	0.25	1,184	6.2	DIRECT	(1/4)	120-1-60	YES	YES	YES	NO	NO	75	NOTE 1	9/05AM02
EF-2	GREENHECK	CUE-090-D	DOWN BLAST	500	0.25	1,184	6.2	DIRECT	(1/4)	120-1-60	YES	YES	YES	NO	NO	75	NOTE 2	9/05AM02
EF-3	GREENHECK	CUE-090-D	UPBLAST	500	0.5	1,500	7.0	DIRECT	0.08	120-1-60	YES	YES	YES	NO	NO	26	NOTE 2	7/05AM03
EF-4	GREENHECK	SP-A90	CEILING	88	0.10	900	1.4	DIRECT	29	120-1-60	YES	YES	NO	YES	NO	10	NOTE 3	8/05AM03
EF-5	GREENHECK	SB-1L24-5	SIDE WALL	6367	0.125	863	17.4	DIRECT	(1/2)	120-1-60	YES	YES	NO	NO	NO	50	NOTE 4	–
EF-6	GREENHECK	VEKTOR-H-12-7	UPBLAST	1200	0.75	2467	–	BELT	(1-1/2)	208-3-60	YES	YES	YES	NO	NO	351	NOTE 5 & 6	11/05AM03

Notes:
1. Provide with speed controller mounted in fan.
2. Provide with switch on wall. When EF-3 is energized, EF-2 is to go off. EF-2 is to be interlocked with F-1, but over ridden by EF-3 switch.
3. Interlock with light switch.
4. Provide with motor side guard, wall collar, damper and damper guard.
5. Fan to be arrangement 9, nozzle size 7. Controls to be located on Fume Hood #2.
6. Provide motor with Class B insulation, coat with "LabCoat"-Dark Gray; mounted and wired NEMA-3R Toggle switch, UL/cUL-705 "Power Ventilators"; Provide with EMV-11 galvanized and coated Isolation Damper with parallel blades, mounted in roof curb; Provide with GPFHLP 21x21 galvanized Roof Curb, 12" height, 1" insulation, mill finish, slope to match roof slope.

GRILLE, REGISTER & DIFFUSER SCHEDULE

FD = FIRE DAMPER
FSD = FIRE/SMOKE DAMPER
OAI = OUTSIDE AIR INTAKE
X"ø = INLET SIZE (IF APPLICABLE)

FD S1 400/12x12 — CFM / NECK SIZE (length x width or length x height)
MARK: S = SUPPLY; R = RETURN, E = EXHAUST; T = TRANSFER; L = LOUVER

CEILING MOUNTED SUPPLY AIR DIFFUSER DEFLECTION LEGEND: 1-WAY; 2-WAY CORNER; 2-WAY OPPOSITE; 3-WAY; 4-WAY

MARK	MAKE	MODEL	CONSTRUCTION	FINISH	BORDER	OBD	REMARKS (SEE BELOW)	MOUNTING DETAIL
S1	TITUS	TDC	STEEL	WHITE	1	NO		12/05AM02
S2	TITUS	TDC	STEEL	WHITE	3	NO		12/05AM02
S3	TITUS	301	STEEL	WHITE	1	NO		12/05AM02
S4	TITUS	S300FS	STEEL	WHITE	1	NO		12/05AM02
S5	TITUS	301RS	STEEL	WHITE	1	NO		
R1	TITUS	50F	ALUMINUM	WHITE	3	NO		
R2	TITUS	350FL	STEEL	WHITE	1	NO		12/05AM02
R3	TITUS	50F	ALUMINUM	WHITE	1	NO		12/05AM02
T1	TITUS	50F	ALUMINUM	WHITE	3	NO		
E1	TITUS	50F	ALUMINUM	WHITE	3	NO		12/05AM02
E2	TITUS	350FL	STEEL	WHITE	1	NO		12/05AM02

INTAKE HOOD SCHEDULE

MARK	MAKE	MODEL	TYPE	THROAT SIZE IN." DIA.	THROAT AREA	CFM	SP	VELOCITY	ACCESSORIES BIRD GUARD	BACKDRAFT DAMPER	ROOF CURB	WEIGHT (LBS)	REMARKS	MOUNTING DETAIL
IH-1	GREENHECK	GRS1-12	INTAKE	12"ø	2.52	500	0.06	–	YES	YES	YES	10	SEE NOTE 1	4/05AM02
IH-2	GREENHECK	GRS1-12	INTAKE	12"ø	2.52	400	0.04	–	YES	YES	YES	10	SEE NOTE 1	4/05AM02
IH-3	GREENHECK	GRS1-16	INTAKE	16"ø	3.02	1200	0.10	–	YES	YES	YES	16	SEE NOTE 1	4/05AM02

Notes: 1. Provide slope curb to match roof slope so Intake Hood is level.

MECHANICAL GENERAL NOTES

1. All work shown herein shall comply with the requirements of the following codes:
   - 2010 California Administrative Code (CAC): Part 1, Title 24, California Code of Regulations (CCR)
   - 2010 California Building Code (CBC): Part 2, Title 24 CCR
   - 2010 California Electrical Code (CEC): Part 3, Title 24 CCR
   - 2010 California Mechanical Code (CMC): Part 4, Title 24 CCR
   - 2010 California Plumbing Code (CPC): Part 5, Title 24 CCR
2. Furnish all labor, materials, transportation, and perform all required operations to provide complete and operable mechanical system, in accordance with the full intent and meaning of the drawings and specifications.
3. All locations of ductwork and equipment are shown diagrammatically. Adhere to locations as closely as possible, vary runs or shape of ductwork as required to meet structural and other interferences as required by the Architect.
4. Duct dimensions shown are internal. Increase outer duct dimension as required to account for the thickness of internal lining where applicable.
   All duct shall be fabricated and installed per Chapter 6, 2010 CMC.
5. All equipment shall be installed with sufficient access to controls, filters, electric motors, etc. Access clearance shall be 30" or as required by the equipment manufacturer, which ever is greater. Contractors shall provide access panels where required.
6. The Mechanical Contractor shall coordinate all air terminals with reflected ceiling plan and all ductwork locations with work of other trades before proceeding with fabrication.
7. The Mechanical Contractor shall coordinate with general contractor for access to all dampers, equipment, as well as platform and curb locations, and shall make all platforms and curbs level.
8. Controls or switches intended to be used by the occupant of a room or area to control heating, cooling or ventilation equipment shall be mounted at the heights given by section 1142A.2 of the 2010 CBC. Notify the architect immediately if the mounting heights required by the 2010 CBC cannot be obtained at the location where the control device is shown on the mechanical floor plans.

MATERIALS

FLUE VENT PIPE AND FITTINGS

A. Flues or vents shall terminate above the roof with flashing and a listed vent cap installed in accordance with its listing and the manufacturer's instructions. Flues or vents shall terminate as required per 2010 CMC.
B. Vent cap shall be of the same manufacturer as the flue pipe.
C. For condensing furnaces: DuraVent PolyPro venting system: Inner pipe a minimum of 2.2 thick polypropylene pipe. Exterior pipe made of galvalume. ULC-S636 gas vent -BH. Class II venting system, installed per manufacturer's recommendations.

REFRIGERANT PIPING

A. Refrigerant piping shall be flushed clean with nitrogen and the ends capped prior to installation. Refrigerant piping shall be Type L copper with wrought copper fittings. Use 45% minimum silver brazing alloy with melting point higher than 1100 F. for making the joints.
B. Insulate refrigerant suction line with 3/4" thick Owens-Corning Fiberglass or Armstrong Armaflex foamed plastic flexible tubing insulation applied with No. 500 adhesive. Slip insulation over open end of pipe as Work progresses. Do not slit insulation. Use multiple layers and miter insulation to cover joints and all other items as required to prevent condensation. Finish with 2 coats of Armstrong Armaflex finish, white in color.

REFRIGERANT PIPING ACCESSORIES

A. Stop valves shall be Henry Type 622, 500 psi pressure rating brass, soldered, packless diaphragm, globe shut-off pattern.
B. Solenoid valves shall be Sporlan Type MA14, 450 psi rating, brass body.
C. Filter dryer shall be Sporlan "Catch-All" with soldered connections

REV	DATE	BY	DESCRIPTION

DESIGNED LM
DRAWN DM
CHECKED LM
DATE SEPT 2013

Brummel, Myrick & Associates
mechanical engineering
100 Cross Street, Suite 204
San Luis Obispo, CA 93401
OFF: (805) 544-4269
FAX:(805) 544-4335
BMA JOB #12198.00

carollo

SAN LUIS OBISPO COUNTY

SAN LUIS OBISPO COUNTY
LOS OSOS WATER RECYCLING FACILITY PROJECT
MECHANICAL
SCHEDULES, LEGEND & NOTES

VERIFY SCALES
BAR IS ONE INCH ON ORIGINAL DRAWING
0 1"
IF NOT ONE INCH ON THIS SHEET, ADJUST SCALES ACCORDINGLY

JOB NO. 8930A.11
DRAWING NO. 05AM01
SHEET NO. OF XXX

\\server1\data\Drawings\12\12198.00\mech\12198.00_05AM01.dwg davidm Sep 11,2013-2:06pm

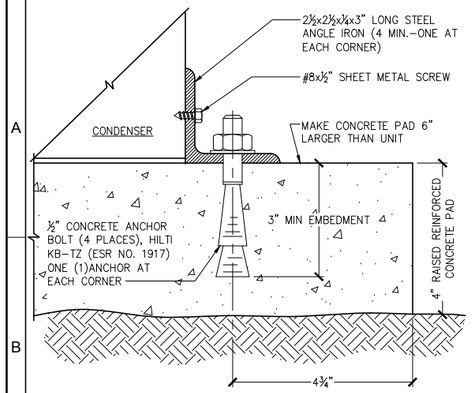

1 CONDENSING UNIT ANCHOR

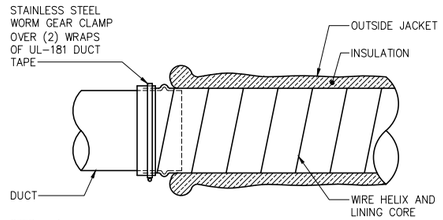

STEP – 1:
FOLD BACK JACKET AND INSULATION. SLIDE AT LEAST 1" OF CORE OVER DUCT AND PAST THE BEAD. SEAL CORE TO DUCT WITH AT LEAST (2) WRAPS OF UL–181 LISTED DUCT TAPE. SECURE CONNECTION WITH A CLAMP PLACED OVER THE CORE AND TAPE PAST THE BEAD.

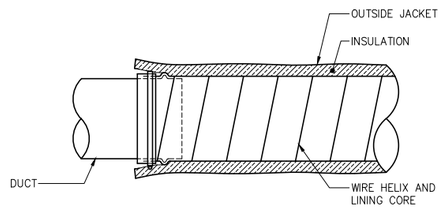

STEP – 2:
PULL THE INSULATION AND JACKET OVER THE TOP OF THE CORE AND THE CLAMP. TUCK THE OUTSIDE JACKET UNDER THE INSULATION.

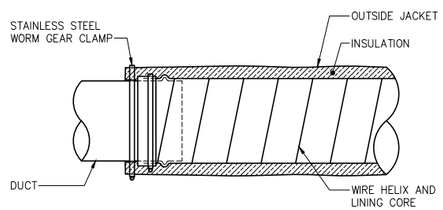

STEP – 3:
INSTALL A CLAMP AROUND THE ENTIRE FLEXIBLE DUCT ASSEMBLY

6 FLEXIBLE DUCT CONNECTION

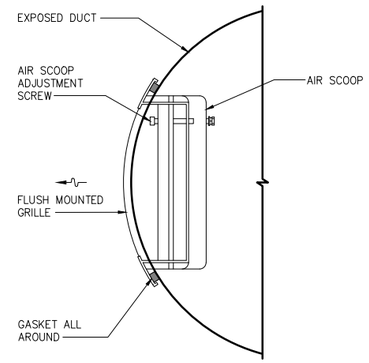

2 FLUSH MOUNTED EXPOSED GRILLE

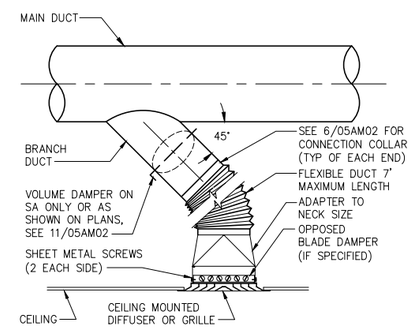

7 TYPICAL DROP

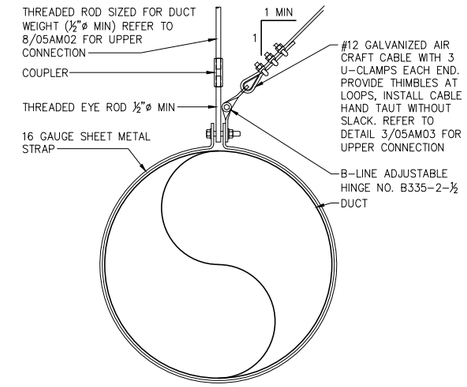

3 EXPOSED DUCT HANGER

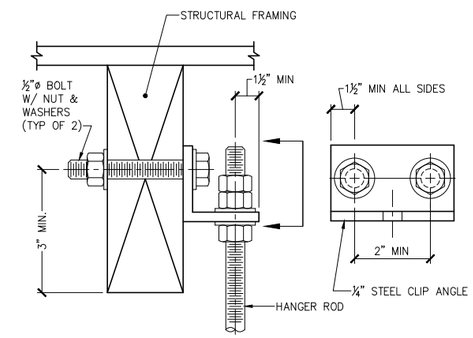

8 SUPPORT CONNECTION

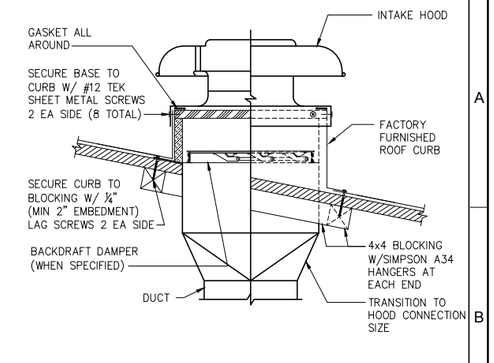

4 INTAKE HOOD MOUNTING

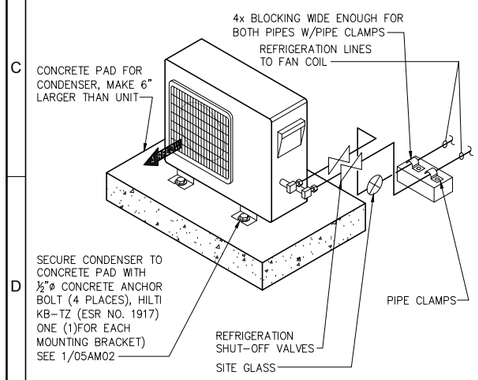

5 CONDENSER MOUNTING

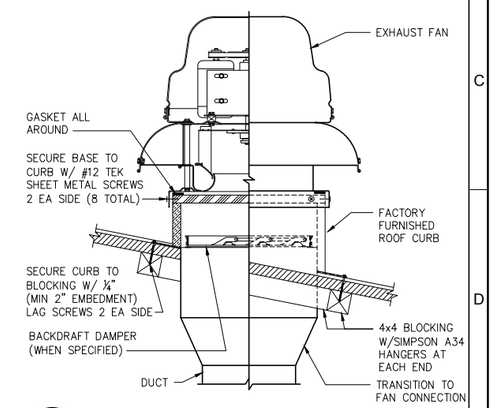

9 EXHAUST FAN MOUNTING

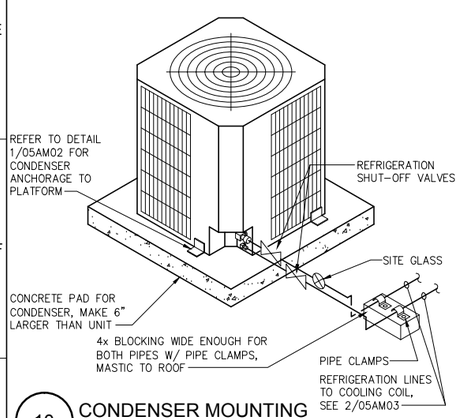

10 CONDENSER MOUNTING

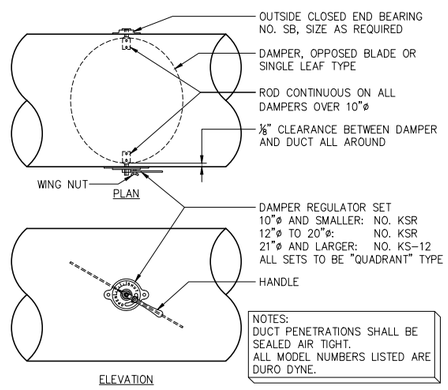

11 ROUND VOLUME DAMPER

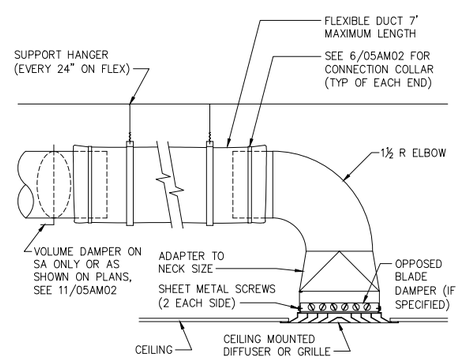

12 DIFFUSER CONNECTION

NOT USED

13

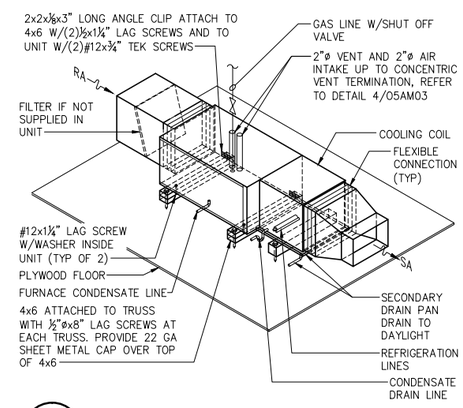

14 CONDENSING HORIZONTAL FURNACE WITH COOLING COIL

REV	DATE	BY	DESCRIPTION

DESIGNED LM
DRAWN DM
CHECKED LM
DATE SEPT 2013

Brummel, Myrick & Associates
mechanical engineering
100 Cross Street, Suite 204
San Luis Obispo, CA 93401
OFF: (805) 544-4269
FAX:(805) 544-4335
BMA JOB #12198.00

carollo

SAN LUIS OBISPO COUNTY

SAN LUIS OBISPO COUNTY
LOS OSOS WATER RECYCLING FACILITY PROJECT
MECHANICAL
DETAILS

VERIFY SCALES
BAR IS ONE INCH ON ORIGINAL DRAWING
0 1"
IF NOT ONE INCH ON THIS SHEET, ADJUST SCALES ACCORDINGLY

JOB NO. 8930A.11
DRAWING NO. 05AM02
SHEET NO. OF XXX

\\server1\data\Drawings\12\12198.00\mech\12198.00_05AM02_05AM03.dwg davidm Sep 11,2013-2:09pm

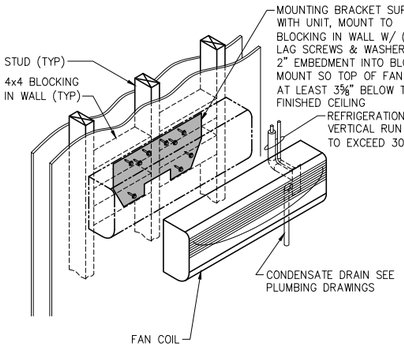

1 HIGH WALL FAN COIL MOUNTING

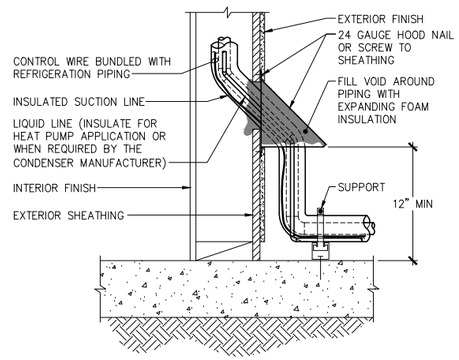

2 REFRIGERATION PIPES THRU EXTERIOR WALL

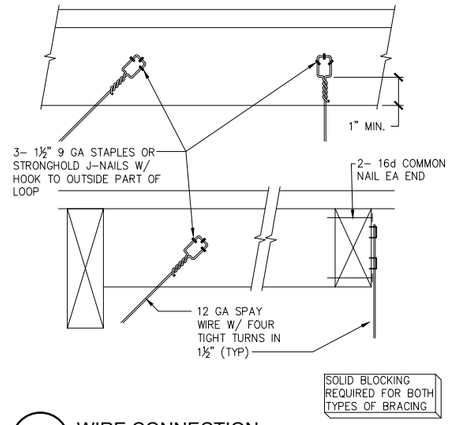

3 WIRE CONNECTION

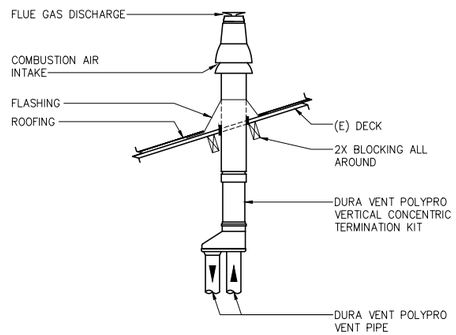

4 CONCETRIC TERMINATION

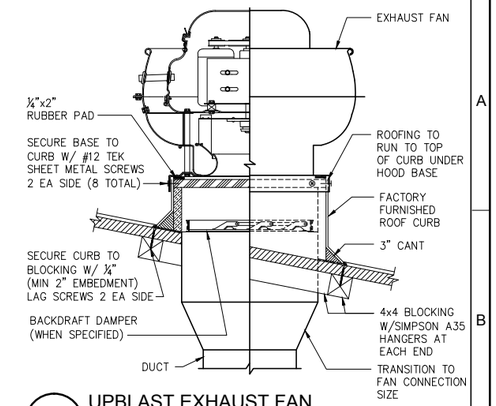

5 UPBLAST EXHAUST FAN

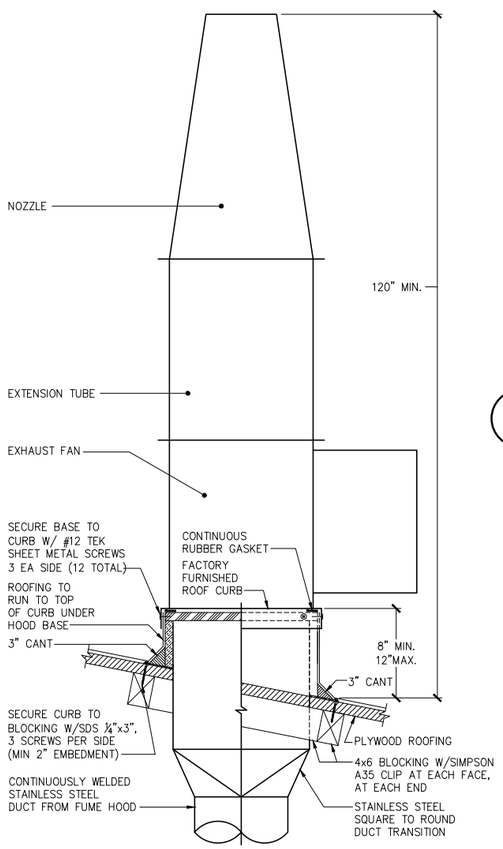

11 FUME HOOD EXHAUST FAN

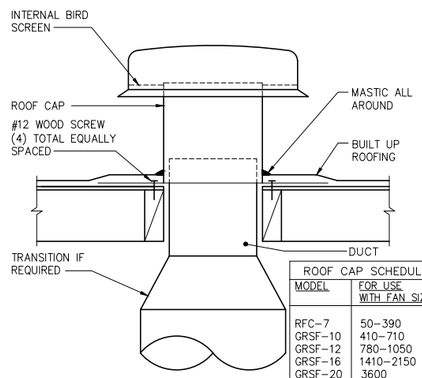

ROOF CAP SCHEDULE	
MODEL	FOR USE WITH FAN SIZES
RFC–7	50–390
GRSF–10	410–710
GRSF–12	780–1050
GRSF–16	1410–2150
GRSF–20	3600
MODEL NUMBERS LISTED ARE GREENHECK	

7 ROOF CAP

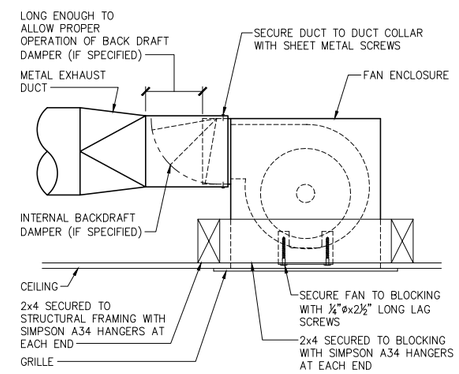

8 CEILING EXHAUST FAN

DUCTLESS SPLIT SYSTEM HEAT PUMP SCHEDULE

MARK	MAKE	MOUNTING TYPE	SERIES	OVERALL MODEL NUMBER	CAPACITY(BTUH)		SEER	HSPF	INDOOR UNIT						OUTDOOR UNIT						REMARKS	MOUNTING DETAIL
					COOLING	HEATING @47			MODEL	POWER	MIN. AMPS	ELEC (KW)	FUSE SIZE	CFM	MODEL	POWER	MCA AMPS	FUSE SIZE	WEIGHT			
DS–2	FUJITSU	HIGHWALL	–	ASU18RLF	18,000	21,600	19.2	10.0	ASU18RLF	208–230 1/60	0.3	N/A	N/A	300–541	ASU18RLF	208–230 1/60	14.5	30	135	–	1/05AM03	

DUCTLESS SPLIT SYSTEM COOLING ONLY SCHEDULE

MARK	MAKE	MOUNTING TYPE	SERIES	OVERALL MODEL NUMBER	CAPACITY	SEER	INDOOR UNIT					OUTDOOR UNIT					REMARKS	MOUNTING DETAIL
					COOLING BTUH		MODEL	POWER	MIN. AMPS	FUSE SIZE	CFM	MODEL	POWER	MCA AMPS	FUSE SIZE	WEIGHT		
DS–1	FUJITSU	HIGH WALL	–	ASU18CL	18,000	19.2	ASU18CL	230–1–60	0.3	N/A	300–541	AOU18CL	30–1–60	16	20	150	–	1/05AM03

REV	DATE	BY	DESCRIPTION

DESIGNED LM
DRAWN DM
CHECKED LM
DATE SEPT 2013

STEVEN PROFESSIONAL ENGINEER LINDON ROGERS EXP. 6/30/15 MECHANICAL STATE OF CALIFORNIA

Brummel, Myrick & Associates
mechanical engineering
100 Cross Street, Suite 204
San Luis Obispo, CA 93401
OFF: (805) 544-4269
FAX:(805) 544-4335
BMA JOB #12198.00

carollo®

SAN LUIS OBISPO COUNTY

SAN LUIS OBISPO COUNTY
LOS OSOS WATER RECYCLING FACILITY PROJECT
MECHANICAL
DETAILS

VERIFY SCALES
BAR IS ONE INCH ON ORIGINAL DRAWING
0 1"
IF NOT ONE INCH ON THIS SHEET, ADJUST SCALES ACCORDINGLY

JOB NO. 8930A.11
DRAWING NO. 05AM03
SHEET NO. OF XXX

\\server1\data\Drawings\12\12198.00\mech\12198.00_05AM02_05AM03.dwg davidm Sep 11,2013-2:08pm

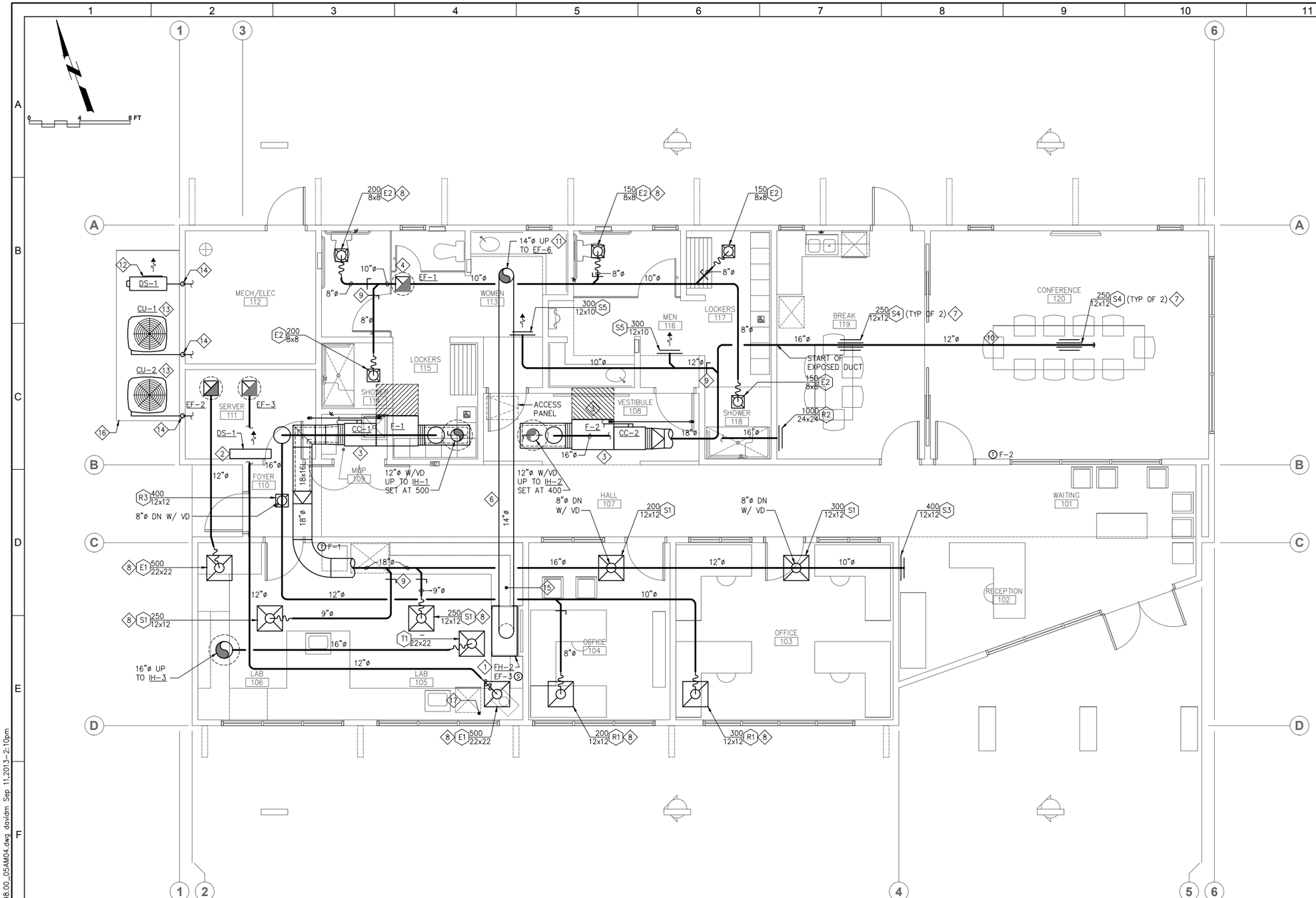

REFERENCE NOTES

1. Fume hood, see spec section 11620.
2. Highwall ductless split heat pump, see detail 1/05AM03.
3. FAU & CC mounting, see 14/05AM02.
4. Exhaust fan, refer to detail 5/AM0503 for mounting.
6. Spiral steel duct, exactly like exposed duct, 16" round 24 GA.
7. Flush mount diffuser, refer to detail 2/05AM02.
8. Typical ceiling mounted diffuser, refer to detail 7 & 12/05AM02.
9. Typical volume damper, refer to detail 11/05AM02.
10. Exposed duct mounting, see 3/AM0502, typical.
11. EF-6 on roof, see detail 11/05AM03.
12. Condensor, see detail 11/05AM02.
13. Condensor, see detail 10/05AM02.
14. Refrigeration pipe thru wall, see detail 2/05AM03.
15. See specifications for fume duct materials.
16. Mechanical equipment concrete pad.
17. Extend vent from autoclave thru roof per manufacturers requirements. Verify location.

MECHANICAL FLOOR PLAN -ADMINISTRATION BUILDING

SCALE:1/4"=1'-0"

REV	DATE	BY	DESCRIPTION

DESIGNED LM
DRAWN DM
CHECKED LM
DATE SEPT 2013

Brummel, Myrick & Associates
mechanical engineering
100 Cross Street, Suite 204
San Luis Obispo, CA 93401
OFF: (805) 544-4269
FAX: (805) 544-4335
BMA JOB #12198.00

carollo

SAN LUIS OBISPO COUNTY

SAN LUIS OBISPO COUNTY
LOS OSOS WATER RECYCLING FACILITY PROJECT
MECHANICAL
ADMINISTRATION BUILDING
FLOOR PLAN

VERIFY SCALES
BAR IS ONE INCH ON ORIGINAL DRAWING
0 1"
IF NOT ONE INCH ON THIS SHEET, ADJUST SCALES ACCORDINGLY

JOB NO. 8930A.11
DRAWING NO. 05AM04
SHEET NO. OF XXX

\\server1\data\Drawings\12\12198.00\mech\12198.00_05AM04.dwg davidm Sep 11,2013-2:10pm

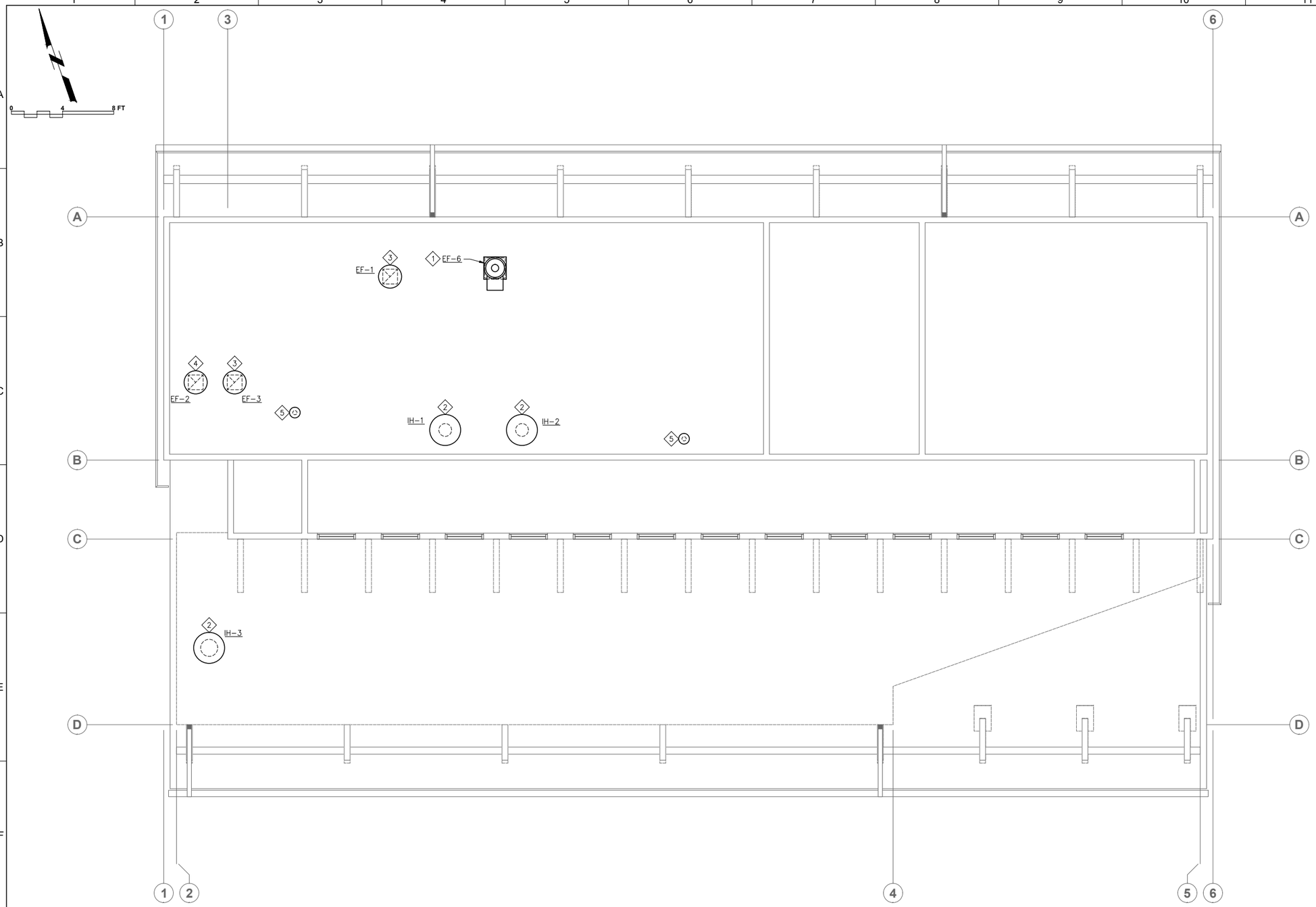

REFERENCE NOTES

1. Fume exhaust fan, see detail 11/05AM03.
2. Intake hood, see detail 4/05AM02.
3. Exhaust fan, see detail 9/AM0502.
4. Exhaust fan, see detail 5/05AM03
5. Flues from F-1 & F-2, see detail 4/AM0503.

MECHANICAL ROOF PLAN -ADMINISTRATION BUILDING

SCALE:1/4"=1'-0"

REV	DATE	BY	DESCRIPTION

DESIGNED LM
DRAWN DM
CHECKED LM
DATE SEPT 2013

LICENSED PROFESSIONAL ENGINEER LINDON MYRICK M.E. EXP. 6/30/15 MECHANICAL STATE OF CALIFORNIA

Brummel, Myrick & Associates
mechanical engineering
100 Cross Street, Suite 204
San Luis Obispo, CA 93401
OFF: (805) 544-4269
FAX:(805) 544-4335
BMA JOB #12198.00

carollo®

SAN LUIS OBISPO COUNTY

SAN LUIS OBISPO COUNTY
LOS OSOS WATER RECYCLING FACILITY PROJECT
MECHANICAL
ADMINISTRATION BUILDING
ROOF PLAN

VERIFY SCALES
BAR IS ONE INCH ON ORIGINAL DRAWING
0 1"
IF NOT ONE INCH ON THIS SHEET, ADJUST SCALES ACCORDINGLY

JOB NO. 8930A.11
DRAWING NO. 05AM05
SHEET NO. OF XXX

\\server1\data\Drawings\12\12198.00\mech\12198.00_05AM05.dwg davidm Sep 11,2013-2:13pm

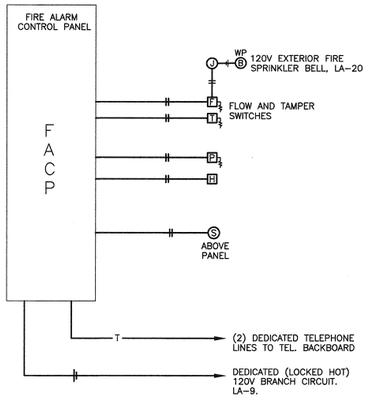

DEFERRED FIRE ALARM SYSTEM PERFORMANCE SPECIFICATION NOTES

1. PROVIDE ALL WORK AND MATERIAL REQUIRED FOR A COMPLETE AND OPERATING FIRE ALARM SYSTEM. WORK SHALL INCLUDE (BUT NOT BE LIMITED TO):

   A. SYSTEM DESIGN.

   B. SUBMITTAL FOR APPROVAL.

   C. COMPLETE INSTALLATION AND TESTING.

   D. SYSTEM TRAINING FOR OWNER'S REPRESENTATIVE.

   E. WARRANTY.

2. FIRE ALARM CONTROL PANEL SHALL BE ADDRESSABLE, APPROVED MANUFACTURERS ARE FCI/GAMEWELL, AND SILENT KNIGHT . PROVIDE WITH DIALER (DACT) AND CONNECT TO COMMUNICATIONS SYSTEM AS REQUIRED TO SEND THREE SEPARATE AND DISTINCT SIGNALS BEING WATERFLOW, TAMPER AND TROUBLE TO AN APPROVED CENTRAL STATION. FIRE SPRINKLER RISER WATERFLOW AND/OR VALVE TAMPER SWITCHES SHALL BE PROVIDED AND INSTALLED BY THE SPRINKLER SYSTEM CONTRACTOR, AND WIRED BACK TO THE FACP BY THE FIRE ALARM CONTRACTOR. COORDINATE FOR PROPER VOLTAGE. ALL FIRE ALARM COMPONENTS SHALL BE CALIFORNIA STATE FIRE MARSHAL LISTED.

3. SUBMIT DETAILED FIRE ALARM PLANS, SPECIFICATIONS AND ENGINEERING CALCULATIONS INCLUDING, BUT NOT NECESSARILY LIMITED TO:

   A. CSFM LISTING NUMBERS AND MANUFACTURER MODEL NUMBERS FOR EVERY SYSTEM COMPONENT, WHICH IS TO BE INTERCONNECTED AS PART OF THIS PROJECT.

   B. SINGLE LINE, RISER AND POINT TO POINT WIRING DIAGRAMS INCLUDING BATTERY AND VOLTAGE DROP CALCULATIONS FOR THE ENTIRE SYSTEM.

   C. INDICATION OF CONDUCTOR TYPE(S) AND SIZES, POWER LIMITED OR NON-POWER LIMITED SYSTEM.

   D. SCALED ELEVATION OF REMOTE GRAPHIC ANNUNCIATOR PANEL AT ENTRY.

   E. LIST OF PROPOSED ZONES FOR ALL INITIATING DEVICES.

   F. MATRIX OF SYSTEM OPERATION.

   G. INFORMATION AS REQUIRED TO DEMONSTRATE COMPLIANCE WITH APPLICABLE CODE(S) AND GAIN APPROVAL OF AUTHORITY(IES) HAVING JURISDICTION.

4. FIRE ALARM SYSTEM INSTALLATION SHALL NOT BEGIN UNTIL SEPARATE PERMIT HAS BEEN OBTAINED AND ALL OF THE ABOVE HAS BEEN ACCEPTED AND SIGNED BY THE AUTHORITY(IES) HAVING JURISDICTION. AFTER CONSTRUCTION, PROVIDE ACCURATE FIELD RECORD DRAWINGS TO OWNER.

1 FIRE ALARM RISER DIAGRAM
NTS

GENERAL NOTES

1. CODE COMPLIANCE: ALL WORK SHALL CONFORM TO AND BE PERFORMED IN ACCORDANCE WITH CODES, STANDARDS, AND ORDINANCES AS SET FORTH BY THE AUTHORITIES HAVING JURISDICTION AND THEIR LATEST ADOPTED EDITIONS (IN EFFECT AT TIME OF BUILDING PERMIT APPLICATION) OF THE FOLLOWING PUBLICATIONS:

   A. CALIFORNIA CODE OF REGULATIONS TITLE 24; INCLUDES 2010 NATIONAL ELECTRICAL CODE, 2010 INTERNATIONAL FIRE CODE, 2010 INTERNATIONAL BUILDING CODE, ETC. WITH CALIFORNIA AND OTHER LOCAL AMENDMENTS AS APPLICABLE.

   B. AMERICANS WITH DISABILITIES ACT (ADA).

2. SAFETY: THE ELECTRICAL CONTRACTOR IS RESPONSIBLE TO MAINTAIN ALL EQUIPMENT IN A SAFE AND RESPONSIBLE MANNER. KEEP DEAD FRONT EQUIPMENT IN PLACE WHILE EQUIPMENT IS ENERGIZED. CONDUCT ALL CONSTRUCTION OPERATIONS IN A SAFE MANNER FOR EMPLOYEES AS WELL AS OTHER WORKPERSONS OR ANYONE VISITING THE JOB SITE. PROVIDE BARRIERS, FLAGS, TAPE, ETC. AS REQUIRED FOR SAFETY. THE CONTRACTOR SHALL HOLD ALL PARTIES HARMLESS OF NEGLIGENT SAFETY PRACTICES, WHICH MAY CAUSE INJURY TO OTHERS ON OR NEAR THE JOB SITE.

3. FIRE RATED ASSEMBLIES SHALL MAINTAIN RATINGS AS SPECIFIED IN THE CALIFORNIA BUILDING CODE CHAPTER 7. CONTRACTOR SHALL PROVIDE AND INSTALL PHYSICAL ENCLOSURE AROUND FIXTURES, PANELS, ETC. AS REQUIRED. ALL ASSEMBLIES TO BE PENETRATED SHALL BE INSTALLED WITH APPLICABLE THROUGH-PENETRATION FIRESTOP SYSTEM AS DETERMINED BY UL CLASSIFICATION. BEFORE CONSTRUCTION, VERIFY AND COMPLY WITH REQUIREMENTS OF LOCAL AUTHORITY HAVING JURISDICTION.

4. MOUNTING HEIGHTS SHALL BE AS FOLLOWS UNLESS OTHERWISE NOTED:

   +15" AFF: RECEPTACLES, TELEPHONE, TV & DATA OUTLETS. (MEASURED BOTTOM OF OUTLET BOX)
   +48" AFF: LIGHT SWITCHES. (MEASURED TOP OF OUTLET BOX)
   +48" AFF: FIRE ALARM MANUAL PULL STATIONS, T-STATS. (MEASURED TOP OF OUTLET BOX)
   THE LOWER OF +80" AFF TO BOTTOM OF LENS, OR 6" BELOW CEILING: FIRE ALARM VISUALS.

   ELECTRICAL SWITCHES: CONTROLS AND SWITCHES INTENDED TO BE USED BY THE OCCUPANT OF THE ROOM OR AREA TO CONTROL LIGHT AND RECEPTACLE OUTLETS, APPLIANCES OR COOLING, HEATING AND VENTILATING EQUIPMENT, SHALL BE LOCATED NO MORE THAN 48 INCHES MEASURED FROM THE TOP OF THE OUTLET BOX NOR LESS THAN 15 INCHES MEASURED FROM THE BOTTOM OF THE OUTLET BOX TO THE LEVEL OF THE FINISH FLOOR OR WORKING PLATFORM. [CBC 1117B.6, ITEM 5.1]

   ELECTRICAL RECEPTACLE OUTLETS: ELECTRICAL RECEPTACLE OUTLETS ON BRANCH CIRCUITS OF 30 AMPERES OR LESS AND COMMUNICATION SYSTEM RECEPTACLES SHALL BE LOCATED NO MORE THAN 48 INCHES MEASURED FROM THE TOP OF THE RECEPTACLE OUTLET BOX OR RECEPTACLE HOUSING NOR LESS THAN 15 INCHES MEASURED FROM THE BOTTOM OF THE RECEPTACLE OUTLET BOX OR RECEPTACLE HOUSING TO THE LEVEL OF THE FINISH FLOOR OR WORKING PLATFORM [CBC 1117B.6, ITEM 5.2]

   BEFORE ROUGH-IN, VERIFY ALL MOUNTING HEIGHTS AND EXACT LOCATIONS FOR ALL EQUIPMENT ELECTRICAL CONNECTIONS, STUB-UPS, RECEPTACLES, OUTLETS, ETC. WITH ARCHITECT OR OWNER. PLACE DEVICES LOCATED ABOVE COUNTERS, SHELVING, ETC. AND IN BATHROOMS SO AS NOT TO CONFLICT WITH EDGES OF WAINSCOTING, COUNTER SPLASH, SHELVING, ETC. ARCHITECTURAL SHEETS SHALL GOVERN.

5. LABEL PANELS, CABINETS, BACKBOARDS, MAIN DEVICES, SAFETY SWITCHES, CONTACTORS AND OTHER SPECIFICALLY DESIGNATED EQUIPMENT SHOWN ON PLANS. USE ENGRAVED LAMINATED PLASTIC NAMEPLATES ATTACHED BY SCREWS OR RIVETS. FOR FEEDERS, NEATLY AND INDELIBLY LABEL CONDUIT DESTINATIONS ON BOTH VISIBLE ENDS OF CONDUIT RUNS WHERE CONDUITS TERMINATE AT DESIGNATED ENCLOSURES, STRUCTURES OR EQUIPMENT (INCLUDING PULL AND SPLICE BOXES).

6. EQUIPMENT ANCHORAGE NOTE
   ALL MECHANICAL AND ELECTRICAL EQUIPMENT SHALL BE ANCHORED OR BRACED TO MEET THE HORIZONTAL AND VERTICAL FORCES PRESCRIBED IN THE 2010 CBC, SECTION 1615A.1.20 AND ASCE 7-05 SECTIONS 13.3, 13.4 & 13.6.

   THE ATTACHMENT OF THE FOLLOWING ITEMS SHALL BE DESIGNED TO RESIST THE FORCES PRESCRIBED ABOVE, BUT NEED NOT BE DETAILED ON THE PLANS:

   A. EQUIPMENT WEIGHING LESS THAN 400 POUNDS SUPPORTED DIRECTLY ON THE FLOOR OR ROOF.
   B. FURNITURE REQUIRED TO BE ATTACHED IN ACCORDANCE WITH PART 2, TITLE 24, C.C.R..
   C. TEMPORARY OR MOVABLE EQUIPMENT.
   D. EQUIPMENT WEIGHING LESS THAN 20 POUNDS SUPPORTED BY VIBRATION ISOLATORS.
   E. EQUIPMENT WEIGHING LESS THAN 20 POUNDS SUSPENDED FROM A ROOF OR FLOOR OR HUNG FROM A WALL.

   FOR THOSE ELEMENTS THAT DO NOT REQUIRE DETAILS ON THE APPROVED DRAWINGS, THE INSTALLATION SHALL BE SUBJECT TO THE APPROVAL OF THE MECHANICAL/ELECTRICAL ENGINEER AND THE FIELD REPRESENTATIVE OF THE DIVISION OF THE STATE ARCHITECT.

   PIPING, DUCTWORK, AND ELECTRICAL DISTRIBUTION SYSTEMS SHALL BE BRACED TO RESIST THE FORCES PRESCRIBED IN ASCE 7-05 SECTION 13.3 AS DEFINED IN ASCE 7-05 SECTION 13.6.8, 13.6.7, AND 13.6.5.5, ITEM 6, RESPECTIVELY.

   THE BRACING AND ATTACHMENTS TO THE STRUCTURE SHALL COMPLY WITH ONE OF THE OSHPD PRE-APPROVALS WITH AN OPA#, SUCH AS MASON INDUSTRIES (OPA 349), OR ISAT (OPA 485) AS MODIFIED TO SATISFY ANCHORAGE REQUIREMENTS OF ACI 318, APPENDIX D.

   COPIES OF THE MANUAL SHALL BE ON THE JOBSITE PRIOR TO STARTING HANGING AND BRACING OF THE PIPE, DUCTWORK, AND ELECTRICAL DISTRIBUTION SYSTEMS.

   THE STRUCTURAL ENGINEER OF RECORD SHALL VERIFY THE ADEQUACY OF THE STRUCTURE TO SUPPORT THE HANGER AND BRACE LOADS.

MECHANICAL SYSTEMS

1. MECHANICAL UNIT CONDUITS: TO PREVENT DAMAGE DUE TO VIBRATION, BOTH POWER AND CONTROL WIRING CONDUITS FEEDING EXTERIOR MECHANICAL UNITS SHALL BE PROVIDED AND INSTALLED BY ELECTRICAL CONTRACTOR WITH LIQUID TIGHT FLEXIBLE TYPE AT FINAL CONNECTION TO UNIT AND BETWEEN ROOF JACK AND DISCONNECT SWITCH WHERE DISCONNECT IS MOUNTED ON UNIT.

2. MECHANICAL CONTROLS ROUGH-IN: PROVIDE AND INSTALL J-BOX, RING AND CONDUIT (SIZE ALL AS REQUIRED) FROM EACH MECHANICAL CONTROLS LOCATION TO CONTROLLED MECHANICAL UNITS.

3. T-STAT J-BOXES: PROVIDE AND INSTALL 4" SQUARE JUNCTION BOX WITH 1-GANG RING AND 1/2" CONDUIT TO ACCESSIBLE CEILING SPACE ABOVE AT EACH THERMOSTAT LOCATION. REFER TO MECH PLANS FOR T'STAT LOCATIONS.

4. EXHAUST FANS SHALL BE PROVIDED & INSTALLED BY MECHANICAL CONTRACTOR WITH WIRING CONNECTIONS MADE BY ELECTRICAL CONTRACTOR.

5. MECHANICAL EQUIPMENT CONTROLS: MECHANICAL CONTRACTOR SHALL BE RESPONSIBLE FOR ALL LOW VOLTAGE WIRE AND CONNECTIONS (BELOW 120 VOLT) TO AND FROM ALL MECHANICAL CONTROL DEVICES. ALL LOW VOLTAGE CONTROL WIRE SHALL BE IN CONDUIT, UNLESS OTHERWISE NOTED.

6. PULLROPES: ANY RACEWAY WITHOUT CABLE OR WIRE SHALL BE INSTALLED WITH MINIMUM 200 POUND TEST PULL LINE AND LARGER IF REQUIRED BY SERVING UTILITY COMPANY. ANY NEW OR EXISTING COMMUNICATION OR SIGNAL RACEWAY ROUTED BETWEEN BUILDINGS, SIGNAL CABINETS, AND/OR SIGNAL CLOSETS WITH FUTURE CAPACITY SHALL BE INSTALLED WITH MINIMUM 200 POUND TEST PULL LINE AS WELL AS THE CALLED FOR CABLE.

AMERICAN RECOVERY AND REINVESTMENT ACT (ARRA)

1. ALL EQUIPMENT PROVIDED FOR THIS PROJECT SHALL COMPLY WITH THE REQUIREMENTS OF (ARRA)

LEGEND

NOTE: INTERPRET IN CONTEXT

LIGHT FIXTURES

- CEILING SURFACEMOUNT
- WALL SURFACEMOUNT
- PENDANT MOUNT
- RECESSED DOWNLIGHT
- RECESSED WALLWASH
- RECESSED FLUOR.
- SURFACE FLUOR.
- FLUOR. STRIP UON
- TRACK LIGHT
- DIRECTIONAL FLOOD
- EMERGENCY FIXTURE
- POLE LIGHT
- POLE LIGHT- DECORATIVE
- UPLIGHT- FLUSH IN GRADE
- BOLLARD
- TANDEM-WIRED LAMPS
- UNDERCABINET LIGHT
- WALL SURFACEMOUNT LINEAR TYPE
- PENDANT LINEAR FLUOR.
- RECESSED WALLMOUNT
- WALLPACK
- EXIT LIGHT- WALL
- EXIT LIGHT- CEILING (ARROW INDICATES DIRECTION)
- LETTER ADJACENT INDICATES FIXTURE TYPE

SWITCHES

- $ SPST
- $2 DPST
- $3 3-WAY
- $4 4-WAY
- $D DIMMER
- $T TIMER SWITCH
- $t W/THERMAL OVERLOAD
- $p W/PILOT LIGHT
- $K KEY OPERATED
- $3 DUAL LEVEL SWITCHING
- (a) SWITCHLEG DESIGNATION
- OS OCCUPANCY SENSOR

POWER/COMM.

- SINGLE RECEPT.
- DUPLEX RECEPT.
- DUPLEX- HALF SWITCHED
- DOUBLE DUPLEX
- SPECIAL CONFIGURATION
- FLOORMOUNT 208V, 1ø RECEPT
- DUPLEX- FLOOR OUTLET
- GROUND FAULT CIRCUIT INTERRUPT
- MOUNTED ABOVE COUNTER
- JUNCTION BOX
- TELEPHONE OUTLET
- DATA OUTLET
- PHONE/DATA COMBO OUTLET
- MOUNTED ABOVE COUNTER
- TV TELEVISION OUTLET
- SAFETY DISCONNECT
- DROP CORD RECEPT
- ABOVE-CLGMOUNT J-BOX
- TV OUTLET-FLOORMOUNT
- TELEPHONE FLOOR OUTLET
- DATA FLOOR OUTLET
- PHONE/DATA COMBO FLOOR OUTLET

MISCELLANEOUS

- MOTOR
- THERMOSTAT
- CIRCUIT BREAKER
- FUSIBLE SWITCH
- GROUND
- PHASE
- CLOCK
- CS CLOCK/SPEAKER COMBINATION
- WALL MOUNTED CLOCK
- PUSHBUTTON
- FLUSHMOUNT PANEL
- SURFACEMOUNT PANEL
- FLUSHMOUNT CABINET
- SURFACEMOUNT CABINET
- K KEYPAD
- CR CARD READER
- SPD SURGE PROTECTION DEVICE
- FSC FAN SPEED CONTROLLER

CONDUIT/WIRE

- NEW
- UNDERGROUND
- NEW POWER HOMERUN (3 HOTS & NEUT SHOWN)
- ISOLATED GROUND
- EXISTING TO REMAIN
- (E) POWER HOMERUN
- WIRE LINE- CONTINUES
- CONDUIT STUB (W/MARKER)
- VERTICAL CONDUIT RUN
- CONDUIT SEAL
- FLEXIBLE CONNECTION
- LOW VOLTAGE
- SURFACEMOUNT RACEWAY
- INDICATES LINE CONTINUES
- CORD W/PLUG

FIRE ALARM

- FIRE ALARM CONTROL PANEL
- RPS REMOTE POWER SUPPLY
- H HORN- AUDIBLE DEVICE
- V VISUAL- VISUAL DEVICE
- AV AUDIBLE/VISUAL
- F FLOW SWITCH
- T TAMPER SWITCH
- P MANUAL PULL STATION
- SD SMOKE DETECTOR
- SD D DUCT SMOKE DETECTOR
- H HEAT DETECTOR
- B BELL
- END OF LINE RESISTOR
- C CHIME

CONVENTIONS

- X — NUMBERED SHEET NOTES: REFERS TO NOTES ON SAME SHEET AS REFERENCE
- 1 / – — DETAIL REFERENCE: –DETAIL DESIGNATION –SHEET NUMBER REFERENCE
- X — EQUIPMENT DESIGNATION

ABBREVIATIONS

A	AMPERE
AB	AMP BREAKER
ABAND	ABANDONED
ABV	ABOVE
AC	ALTERNATING CURRENT
AC-#	AIR CONDITIONER
ADJ	ADJACENT
AF	AMP FUSE, AMP FRAME
AFF	ABOVE FINISH FLOOR
AFG	ABOVE FINISH GRADE
AIC	AMPERES INTERRUPTING CAPACITY
AI	ALUMINUM
AS	AMP SWITCH RATING
ATS	AUTOMATIC TIME SWITCH
ATS	AUTOMATIC TRANSFER SWITCH
AV	AUDIBLE/AUDIO VISUAL
AWG	AMERICAN WIRE GAGE
BFG	BELOW FINISH GRADE
BIL	BASIC IMPULSE LEVEL
BLDG	BUILDING
C	CONDUIT
-C-	CATV CONDUIT
CAB'T	CABINET
CATV	CABLE TELEVISION
CB	CIRCUIT BREAKER, CODE BLUE
CBC	CA. BUILDING CODE
CEC	CA. ELECTRICAL CODE
	CA. ENERGY COMMISSION
CF	COMPACT FLUORESCENT
CFC	CALIFORNIA FIRE CODE
CLG	CEILING
CL	CENTER LINE
CKT	CIRCUIT
CNT'R	CONTRACTOR
C.O.	CONDUIT ONLY (W/PULLROPE)
COND	CONDUIT, CONDUCTOR
CR	CRITICAL BRANCH
CSFM	CALIFORNIA SFM
CT	CURRENT TRANSFORMER
Cu	COPPER
CU-#	CONDENSING UNIT
D	DEPTH
DC	DIRECT CURRENT
DF	DRINKING FOUNTAIN
DIA	DIAMETER
DISC	DISCONNECT
DIST	DISTRIBUTION
DPST	DOUBLE POLE SINGLE THROW
DW	DISHWASHER
EM	EMERGENCY
(E)	EXISTING
EA	EACH
EB	ELECTRONIC BALLAST
EC	ELECTRICAL CONTRACTOR
EC-#	EVAPORATIVE COOLER
EF-#	EXHAUST FAN
EL	EVENING LIGHT
ELEC	ELECTRICAL
EM	EMERG BATTERY BACKUP
EMB	EMERGENCY BALLAST
EMERG	EMERGENCY
EOL	END OF LINE
EQUIP'T	EQUIPMENT
ES	ENERGY SAVING
(EXN)	(E) IN (N) LOCATION
(EXR)	(E) TO BE (R)
EXT	EXTERIOR
F	FLUORESCENT
(F)	FUTURE
F-#	FURNACE
FA	FIRE ALARM

FACP	FIRE ALARM CONTROL PANEL
FAT	FIRE ALARM TERMINAL
FAU	FORCED AIR UNIT
FBO	FURNISHED BY OTHERS
FC-#	FAN COIL
FLA	FULL LOAD AMPS
FLR	FLOOR
FLUOR	FLUORESCENT
FS	FUSIBLE SWITCH
FVNR	FULL VOLTAGE NON-REVERSING
G	GROUNDING CONDUCTOR
GC	GENERAL CONTRACTOR
GD	GARBAGE DISPOSAL
GFCI	GROUND FAULT CIRCUIT INTERRUPTER
GFI	GROUND FAULT CIRCUIT INTERRUPTER
GND	GROUND
GRS	GALVANIZED RIGID STEEL
GWS	GANG WITH SWITCH
H	HEIGHT, HIGH
HACR	HEATING, AC & REFRIG
HID	HIGH INTENSITY DISCHARGE
HO	HIGH OUTPUT
HOA	HAND-OFF-AUTO
hp	HORSEPOWER
HPF	HIGH POWER FACTOR
HPS	HIGH PRESSURE SODIUM
IC	INTERCOM
ID	IDENTIFICATION
IF	INSIDE FROST
IG	ISOLATED GROUND
J-BOX	JUNCTION BOX
K	QUANTITY 1000
kVA	KILOVOLTAMPS
kW	KILOWATT
LC	LIGHTING CONTACTOR
LPS	LOW PRESSURE SODIUM
LRA	LOCKED ROTOR AMPS
LS	LIFE SAFETY BRANCH
LT	LIGHT
LTG	LIGHTING
LV	LOW VOLTAGE
MC	MECHANICAL CONTRACTOR
MCA	MINIMUM CKT AMPS
MCB	MAIN CIRCUIT BREAKER
MCTB	MAIN CATV TERMINAL BOARD
MCTC	MAIN CATV TERMINAL CABINET
MECH	MECHANICAL
MFR	MANUFACTURER
MFS	MAIN FUSIBLE SWITCH
MH	METAL HALIDE
MLO	MAIN LUGS ONLY
MOCP	MAXIMUM OCP
MSB	MAIN SWITCHBOARD
MT	MOUNT
MT HT	MOUNTING HEIGHT
MTS	MANUAL TRANSFER SWITCH
MTTB	MAIN TELEPHONE TERMINAL BOARD
MTTC	MAIN TELEPHONE TERMINAL CABINET
MW	MICROWAVE
N	NEUTRAL (GROUNDED CONDUCTOR)
(N)	NEW
N3R	NEMA 3R
NC	NORMALLY CLOSED
NEC	NATIONAL ELECTRICAL CODE
NEMA	NAT'L ELEC MANUFACTURER'S ASSOC
NIC	NOT IN CONTRACT
NL	NIGHT LIGHT
NO	NORMALLY OPEN
NPF	NORMAL POWER FACTOR
NTS	NOT TO SCALE
OC	ON CENTER

OCP	OVERCURRENT PROTECTION
OD	OUTSIDE DIAMETER
OH	OVERHEAD
OSA	OFFICE of the STATE ARCHITECT
OSHPD	OFFICE of STATEWIDE HEALTH PLANNING & DEVELOPMENT
OVLD	OVERLOAD
P	POLE
PA	PUBLIC ADDRESS
PB	PULLBOX
PC	PULL CHAIN
PC	PHOTOCELL
PC	PLUMBING CONTRACTOR
ph	PHASE
PNL	PANEL
POC	POINT OF CONNECTION
-PP-	POWER PRIMARY
-PS-	POWER SECONDARY
(R)	RELOCATE(D)
RECEPT	RECEPTACLE
REF	REFRIGERATOR
REQ'D	REQUIRED
RLA	RATED LOAD AMPS
RM	ROOM
RMC	RIGID METAL CONDUIT
RMV	REMOVE
RPLC	REPLACE
RS	RAPID START
SC	SIGNAL CABINET
SCC	SHORT CKT CURRENT
SFM	STATE FIRE MARSHAL
SHT	SHEET
SL	SLIMLINE, SWITCH LEG
SPEC	SPECIFICATION
SPST	SINGLE POLE SINGLE THROW
SQ	SQUARE
STR'G	STORAGE
SURF	SURFACE
SVC	SERVICE
SW	SWITCH
T	TRANSFORMER, TERMINAL
-T-	TELEPHONE CONDUIT
TBR	TO BE REMOVED
TC	TIME CLOCK
TEL	TELEPHONE
TELCO	TELEPHONE COMPANY
TS	TIME SWITCH
TSO	TIME SWITCH OVERRIDE
TSP	TWISTED SHIELDED PAIR
TTB	TELEPHONE TERMINAL BOARD
TTC	TELEPHONE TERMINAL CABINET
TX	TRANSFORMER
TYP	TYPICAL
TYP SIM	TYPICAL SIMILAR
UC	UNDERCABINET, UNDERCOUNTER
UG	UNDERGROUND
UGPS	UNDERGROUND PULL SECTION
UL	UNDERWRITERS LABORATORIES
UON	UNLESS OTHERWISE NOTED
USA	UG SVC ALERT 800-642-2444
V	VOLT
VA	VOLT AMPERES
VAC	VOLT ALTERNATING CURRENT
VHO	VERY HIGH OUTPUT
VOLT	VOLTAGE
VR	VANDAL-RESISTANT
W	WIDTH, WATT, WIRE
WH-#	WATER HEATER
WP	WEATHERPROOF (NEMA 3R)
XFMR	TRANSFORMER
+48	INDICATES MOUNTING HEIGHT AFF

REV	DATE	BY	DESCRIPTION

DESIGNED RP
DRAWN DM
CHECKED JD
DATE SEPTEMBER 2013

REGISTERED PROFESSIONAL ENGINEER WILLIAM A. THOMA No. 10757 ELECTRICAL STATE OF CALIFORNIA
EXP. 06/30/15 REF. #13-8007

thoma ENGINEERING
THOMA ELECTRIC, INC.
P.O. Box 1167 – 3562 Empleo St.
San Luis Obispo, CA 93406
Phone: (805) 543-3850
Fax: (805) 543-3829
cad@thomaelec.com

carollo

SAN LUIS OBISPO COUNTY

SAN LUIS OBISPO COUNTY
LOS OSOS WATER RECYCLING FACILITY PROJECT
ELECTRICAL
ADMINISTRATION BUILDING
GENERAL NOTES, LEGEND AND ABBREVIATIONS

VERIFY SCALES
BAR IS ONE INCH ON ORIGINAL DRAWING
0 1"
IF NOT ONE INCH ON THIS SHEET, ADJUST SCALES ACCORDINGLY

JOB NO. 8930A.11
DRAWING NO. 05AE01
SHEET NO. OF XX

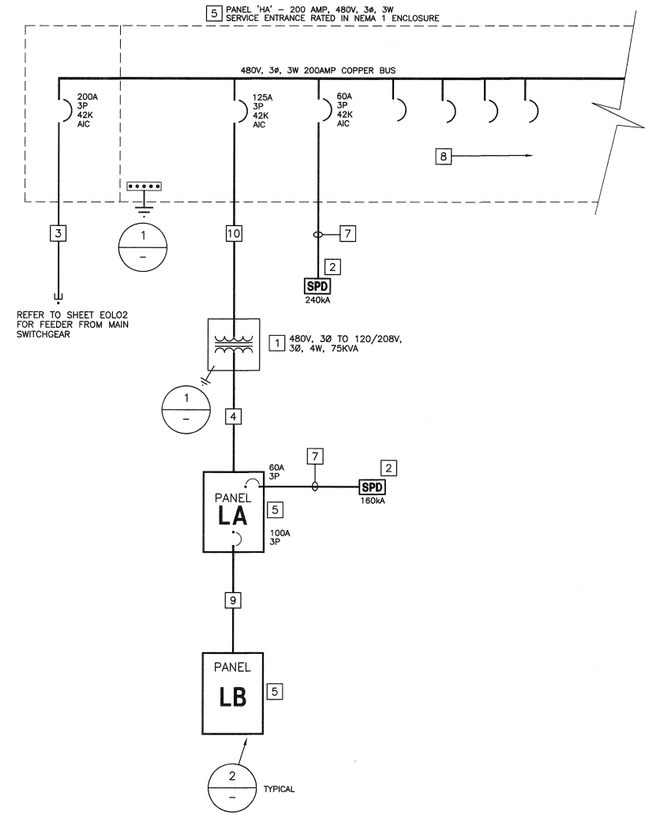

SINGLE LINE DIAGRAM

REFERENCE NOTES

1. TRANSFORMER "TA1", 75 KVA, 480V 3Ø, TO 120/208V, 3ø, 4W, NEMA 1 ENCLOSURE. SEE MOUNTING DETAIL ON SHEET 05AE05.
2. SURGE PROTECTION DEVICE. CUTLER HAMMER SPD SERIES, RATING SHOWN IS PER PHASE. INSTALL AS CLOSE TO SERVING PANEL AS PRACTICAL PER MANUFACTURER'S INSTALLATION INSTRUCTIONS TO MINIMIZE LEAD LENGTH. REFER TO SPECIFICATIONS.
3. (1) 2" C.O. STUB 5'–0" AWAY FROM BLDG.
4. (1) 2–1/2"C – (4) #4/0, & (1) #2 GND.
5. ELECTRICAL PANEL, SEE PANEL SCHEDULES.
6. NOT USED.
7. (1) 1"C – (4) #6 & (1) #10 GND.
8. REFER TO PANEL SCHEDULE FOR COMPLETE CIRCUIT BREAKER INFORMATION.
9. (1) 1–1/4"C – (4) #2 & (1) #8 GND.
10. (1) 1–1/4"C – (3) #1/0, & (1) #6 GND.

GENERAL NOTES

– FOR SERIES RATED EQUIPMENT; IN ADDITION TO ALL FACTORY APPLIED, CODE REQUIRED MARKING AND SPECIFIED LABELING OF THE ELECTRICAL PANELBOARD AND THEIR COMPONENTS, ADDITIONAL MARKING AND LABELING IDENTIFYING THE SERIES RATED SYSTEM SHALL BE PROVIDED AS FOLLOWS:

A. THE SERIES COMBINATION INTERRUPTING RATING, AS INDICATED ABOVE, SHALL BE MARKED ON THE EQUIPMENT BY THE MANUFACTURER AS REQUIRED BY NEC 240–83(C).

B. WHEN USED, THE CONTRACTOR SHALL USE A "SERIES RATED SYSTEM" LABEL INDICATING SERIES RATING WARNINGS, COMPLYING WITH NEC 110–22 AND SHALL BE FURNISHED BY MANUFACTURER. THE LABEL SHALL BE PERMANENTLY AFFIXED TO THE INTERIOR OF PANELBOARD'S TRIM WHERE IT CAN BE READILY SEEN BY SERVICE PERSONNEL. THE COMPLETED LABEL SHALL READ:

CAUTION!
SERIES COMBINATION SYSTEM RATED SYSTEM [XX,XXX]A.
IDENTIFIED REPLACEMENT COMPONENT REQUIRED.
ANY ADDITIONS OR REPLACEMENTS SHALL BE WITH IDENTICAL COMPONENTS.
FAILURE TO DO SO COULD RESULT IN ELECTRICAL EXPLOSION AND FIRE.

SERIES RATINGS SHALL NOT BE USED WHERE MOTORS ARE CONNECTED ON THE LOAD SIDE OF THE HIGHER–RATED OVERCURRENT DEVICE AND ON THE LINE SIDE OF THE LOWER–RATED OVERCURRENT DEVICE, WHEN THE SUM OF THE MOTOR FULL–LOAD CURRENTS EXCEEDS 1 PERCENT OF THE INTERRUPTING RATING OF THE LOWER–RATED CIRCUIT BREAKER PER NEC 240–86(B).

– ALL CONDUCTORS SHALL BE COPPER WITH TYPE [THHN/THWN] INSULATION UNLESS OTHERWISE NOTED.

– ALL SWITCHES, CIRCUIT BREAKERS AND OTHER EQUIPMENT, AS SPECIFIED, SHALL HAVE TERMINATION PROVISIONS LISTED AND IDENTIFIED FOR USE WITH 75 DEG. CONDUCTORS, AND ALL FEEDER CONDUCTORS, AND CONDUITS, ARE SIZE BASED ON USE OF 75 DEG. C COPPER WIRES TYPE THWN/THHN.

– DESIGN SHOWN IS BASED ON CUTLER HAMMER PRODUCTS. ENGINEER–APPROVED EQUAL ALTERNATE PRODUCT WILL BE ACCEPTABLE.

– ALL EQUIPMENT SHALL HAVE AN APPROVED TESTING LABORATORY LABEL ATTACHED [UL, CSA, ETC.] (CEC 110–2).

– ALL EQUIPMENT PROVIDED FOR THIS PROJECT SHALL COMPLY WITH THE REQUIREMENTS OF (ARRA).

WARNING

POTENTIAL ARC FLASH HAZARD
Appropriate PPE and Tools Required when working on this equipment

"PPE" REFERS TO "PERSONAL PROTECTIVE EQUIPMENT".

NOTE:
IN ACCORDANCE WITH CEC 110.16. PROVIDE ARC FLASH PROTECTION WARNING LABELS ON EACH SWITCHBOARD, PANELBOARD, AND TRANSFORMER. LABELS SHALL BE PER ANSI Z535.4 GUIDELINES.

2 ARC FLASH SIGNAGE

NTS

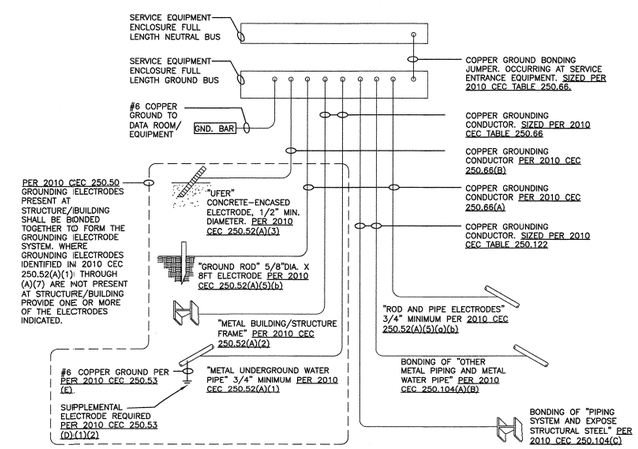

1 GROUND / BONDING DETAIL

NTS

REV	DATE	BY	DESCRIPTION

DESIGNED RP
DRAWN DM
CHECKED JD
DATE SEPTEMBER 2013

REGISTERED PROFESSIONAL ENGINEER WILLIAM A. THOMA NO. 10757 ELECTRICAL STATE OF CALIFORNIA
EXP. 06/30/15 REF. #13–8007

thoma ENGINEERING
THOMA ELECTRIC, INC.
P.O. Box 1167 – 3562 Empleo St.
San Luis Obispo, CA 93406
Phone: (805) 543–3850
Fax: (805) 543–3829
cad@thomaelec.com

carollo

SAN LUIS OBISPO COUNTY

SAN LUIS OBISPO COUNTY
LOS OSOS WATER RECYCLING FACILITY PROJECT
ELECTRICAL
ADMINISTRATION BUILDING
SINGLE LINE DIAGRAM

VERIFY SCALES
BAR IS ONE INCH ON ORIGINAL DRAWING
0 1"
IF NOT ONE INCH ON THIS SHEET, ADJUST SCALES ACCORDINGLY

JOB NO. 8930A.11
DRAWING NO. 05AE02
SHEET NO. OF XX

K:\DWGS\13–8007\13–8007_05AE02.dwg – lynda – Sep 10, 2013 – 3:48pm

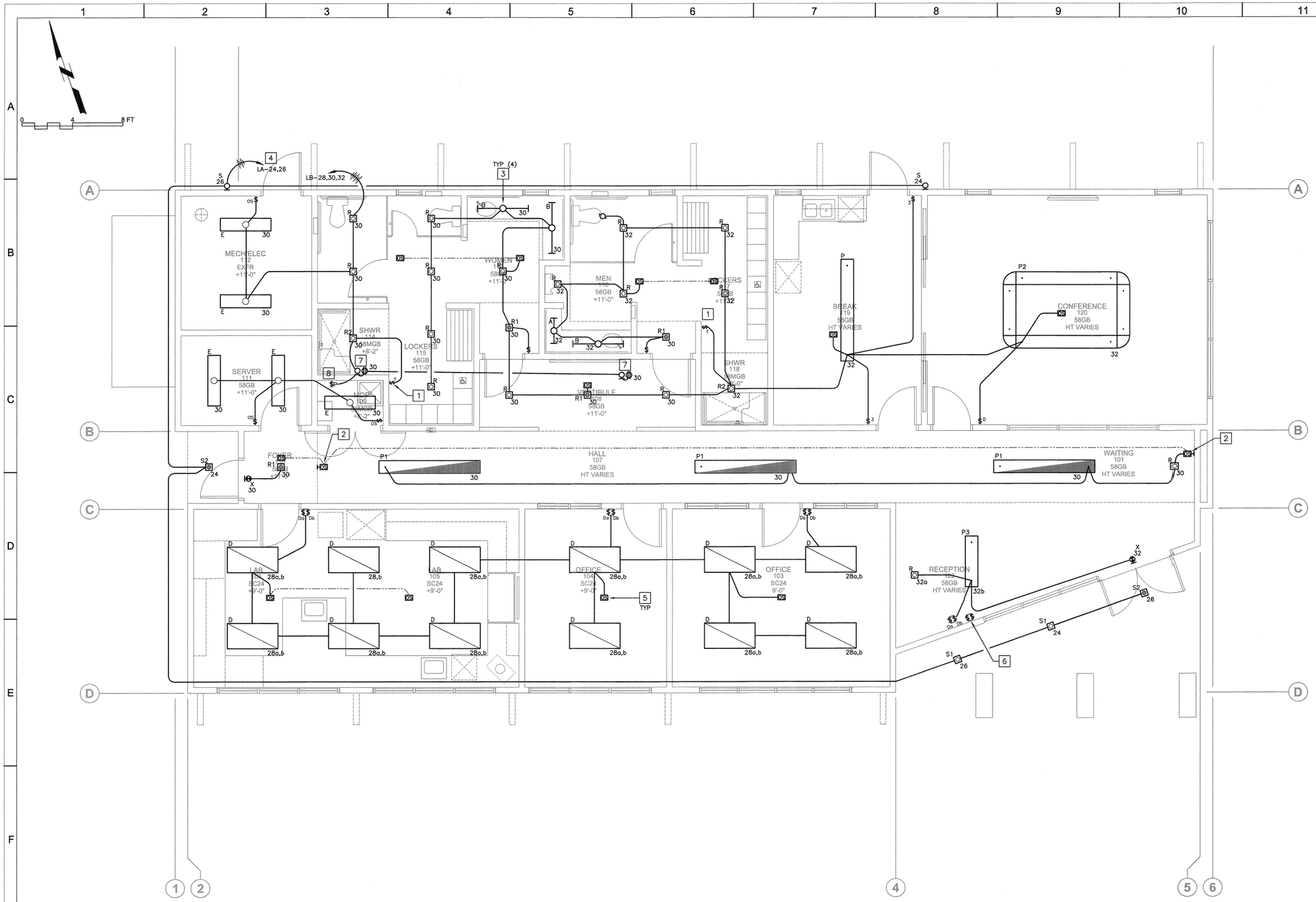

REFERENCE NOTES

1. 0–30 MINUTE ELECTRONIC TIME SWITCH.
2. WALL MOUNTED COMBINATION DAYLIGHTING/OCCUPANCY SENSOR.
3. MOUNT FIXTURE ABOVE LENSE, SEE ARCHITECTURAL PLANS FOR LENSE INFORMATION.
4. ROUTE CIRCUITS THROUGH LIGHTING CONTROLS, SEE LIGHTING CONTROL DIAGRAM ON SHEET 05AE05.
5. OCCUPANCY SENSOR, SEE TYPICAL OCCUPANCY SENSOR WIRING DIAGRAM ON SHEET 05AE05.
6. CONTROL SWITCHES FOR POLE MOUNTED SITE LIGHTING FIXTURES, SEE LIGHTING CONTROL DIAGRAM ON SHEET 05AE05.
7. KEYLESS LAMP HOLDER WITH FLUORESCENT LAMP AND RECEPTACLE, MOUNT IN ATTIC SPACE NEAR HVAC UNITS.
8. MOUNT PILOT LIGHT SWITCH ADJACENT TO ATTIC ACCESS HATCH.

GENERAL LIGHTING PLAN NOTES

- DUAL LEVEL SWITCHING: IN ROOMS 100 SQ. FT. OR LARGER, OR WHERE INDICATED ON PLANS, CONTROL INBOARD LAMPS BY ONE SWITCH AND OUTBOARD LAMPS BY OTHER SWITCH.
- LIGHTING FIXTURE LOCATIONS SHOWN ARE SCHEMATIC. REFER TO ARCHITECTURAL PLANS (REFLECTED CEILING, ELEVATIONS, ETC.) FOR EXACT LOCATIONS AND MOUNTING HEIGHTS PRIOR TO ROUGH–IN.
- REFER TO ARCHITECT'S REFLECTED CEILING PLAN(S) FOR CEILING HEIGHTS, TYPES, FINISHES, ETC. IN EACH AREA. VERIFY FLANGE TYPES, TRIM KITS, STEM LENGTHS, ETC. FOR ALL FIXTURES PRIOR TO SUBMITTALS.
- CONFIRM LOCATION OF ALL DOORS SWINGS WITH ARCHITECTURAL PLANS PRIOR TO ROUGH–IN OF SWITCHES.
- PROVIDE UNSWITCHED HOT LEG OF ROOM LIGHTING BRANCH CIRCUIT TO EACH BATTERY POWERED EMERGENCY LIGHT AND EXIT SIGN FOR CONTINUOUS CHARGING.

LIGHTING FLOOR PLAN

SCALE: 1/4"=1'–0"

NORTH

REV	DATE	BY	DESCRIPTION

DESIGNED RP
DRAWN DM
CHECKED JD
DATE SEPTEMBER 2013

REGISTERED PROFESSIONAL ENGINEER WILLIAM A. THOMA NO. 10757 ELECTRICAL STATE OF CALIFORNIA
EXP. 06/30/15 REF. #13–8007

thoma ENGINEERING
THOMA ELECTRIC, INC.
P.O. Box 1167 – 3562 Empleo St.
San Luis Obispo, CA 93406
Phone: (805) 543–3850
Fax: (805) 543–3829
cad@thomaelec.com

carollo®

SAN LUIS OBISPO COUNTY

SAN LUIS OBISPO COUNTY
LOS OSOS WATER RECYCLING FACILITY PROJECT
ELECTRICAL
ADMINISTRATION BUILDING
LIGHTING FLOOR PLAN

VERIFY SCALES
BAR IS ONE INCH ON ORIGINAL DRAWING
0 1"
IF NOT ONE INCH ON THIS SHEET, ADJUST SCALES ACCORDINGLY

JOB NO. 8930A.11
DRAWING NO. 05AE03
SHEET NO. OF XX

K:\DWGS\13–8007\13–8007_05AE03.dwg – lynda – Sep 10, 2013 – 3:48pm

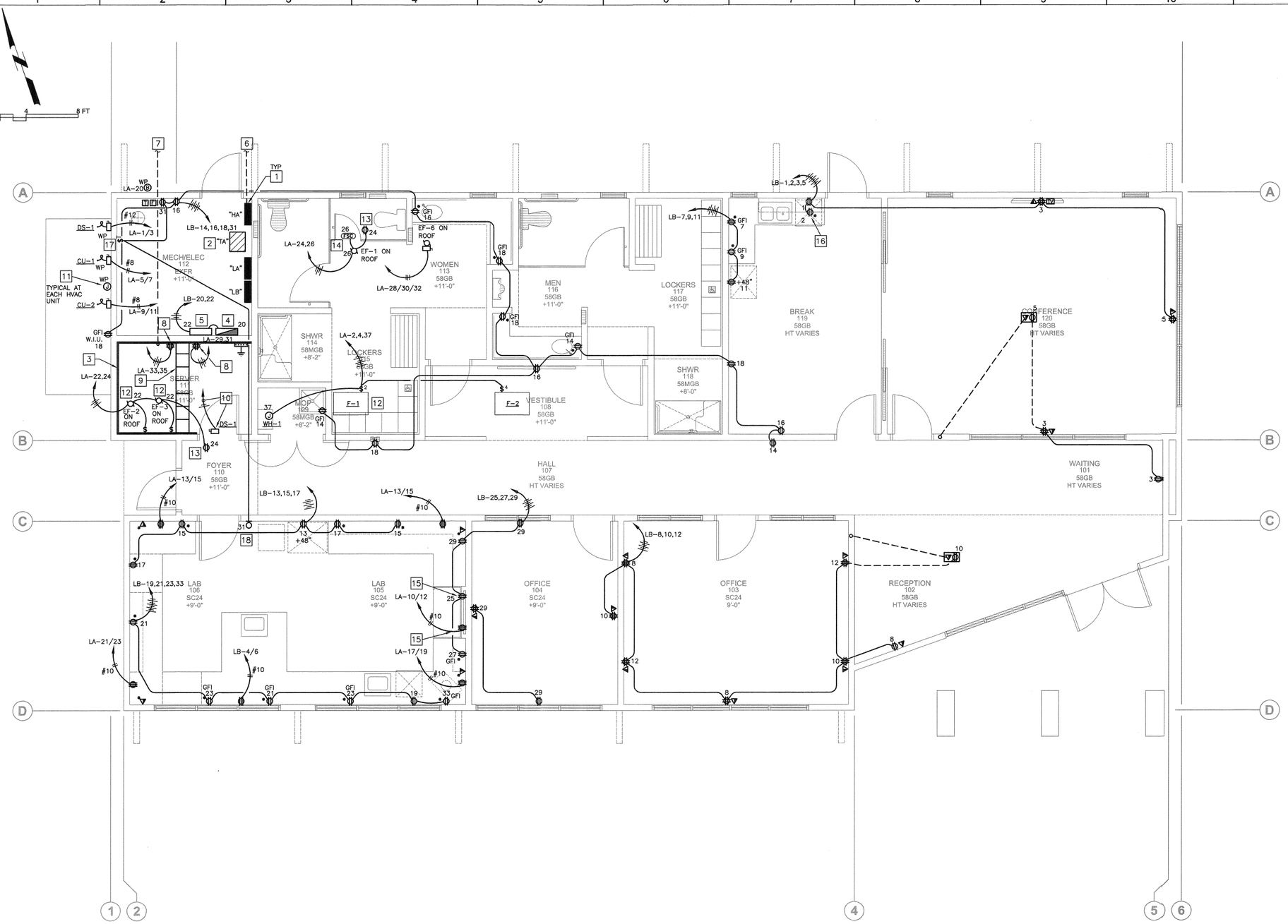

REFERENCE NOTES

1. ELECTRICAL PANEL, SEE SINGLE LINE DIAGRAM AND PANEL SCHEDULES.
2. TRANSFORMER "TA", SEE SINGLE LINE DIAGRAM.
3. PROVIDE 3/4" PLYWOOD BACKBOARD ON WALL AS SHOWN WITH (1)#6 GROUND TO PANEL "HA" GROUND AS PER DETAIL 5/05AE05
4. FIRE ALARM CONTROL PANEL, SEE FIRE ALARM RISER DIAGRAM.
5. LIGHTING CONTROL CABINET, SEE LIGHTING CONTROL DIAGRAM.
6. LOW VOLTAGE SYSTEMS CONDUIT(S), STUB 5'-0" AWAY FROM BUILDING LIMIT. REFER TO SHEET ESC10 FOR INFORMATION.
7. POWER DISTRIBUTION SYSTEM FEEDER, STUB 5'-0" AWAY FROM BUILDING LIMIT. REFER TO SHEET EOL02 FOR INFORMATION.
8. MOUNT RECEPTACLE ADJACENT TO CABLE RUNWAY WALL AT CABLE RUNWAY HEIGHT.
9. 12" WIDE CABLE RUNWAY WITH RUNGS 12" ON CENTER.
10. PROVIDE 3/4" C WITH LINE VOLTAGE CONDUCTORS TO DS-1 OUTDOOR UNIT AS PER MECHANICAL PLANS.
11. PROVIDE J-BOX WITH 1/2" C.O. TO HVAC UNIT CONTROL LOCATION FOR LV WIRING BY OTHERS. REFER TO MECHANICAL PLANS FOR HVAC UNIT CONTROL LOCATIONS.
12. INTERLOCK EF-2, AND EF-3 WITH F-1 AS PER MECHANICAL PLANS. PROVIDE INTERLOCKING CONTROLS AS REQUIRED.
13. GFI RECEPTACLE ON ROOF WITH WIU TYPE COVER.
14. PROVIDE CONNECTION TO FAN SPEED CONTROLLER AS PER MECHANICAL PLANS.
15. INSTALL RECEPTACLES IN FUME HOOD, REFER TO MECHANICAL PLANS FOR COMPLETE INFORMATION.
16. OUTLET FOR MICROWAVE OVEN, VERIFY HEIGHT WITH ARCH PLANS PRIOR TO INSTALLATION.
17. VACUUM PUMP 0 TO 2HR TIME SWITCH.
18. VACUUM PUMP ON/OFF INDICATOR LIGHT.

GENERAL POWER/ COMMUNICATIONS PLAN NOTES

- SIGNAL AND COMMUNICATIONS SYSTEMS RACEWAYS AND BOXES: PROVIDE AND INSTALL 4" SQUARE RECESSED JUNCTION BOX WITH 1-GANG RING AND (1) 1" CONDUIT STUB TO ACCESSIBLE CEILING SPACE ABOVE AT EACH WALL TELEPHONE (VOICE), TELEVISION AND DATA OUTLET LOCATION SHOWN ON THE PLANS UNLESS OTHERWISE NOTED.

  BEFORE CONSTRUCTION, COORDINATE AND VERIFY ALL DATA AND TELEPHONE LOCATIONS WITH OWNER OR ARCHITECT.
- DEVICE LOCATIONS SHOWN ARE SCHEMATIC AND APPROXIMATE. EXACT LOCATIONS SHALL BE FIELD VERIFIED DURING ROUGH-IN WITH ARCHITECTURAL ELEVATIONS, CASEWORK SHOP DRAWINGS, FURNITURE, ETC. AND SHALL BE COORDINATED WITH OTHER TRADES TO AVOID CONFLICT WITH OTHER EQUIPMENT.
- FUSING: ALL FUSIBLE SAFETY DISCONNECT SWITCHES SHALL BE PROVIDED WITH DUAL-ELEMENT TIME DELAY TYPE FUSES SIZED AND RATED PER EQUIPMENT MANUFACTURERS' RECOMMENDATIONS. VERIFY WITH EQUIPMENT NAMEPLATE BEFORE INSTALLATION.
- INSTALL SEPARATE NEUTRALS FOR EACH BRANCH CIRCUIT.
- MOTOR OVERLOAD PROTECTION: WHERE REQUIRED BY NEC ARTICLE 430 PART C AND NOT SHOWN ON PLAN OR PROVIDED INTEGRAL WITH EQUIPMENT, PROVIDE AND INSTALL THERMAL OVERLOAD PROTECTION FOR ALL MOTORS.
- DEVICE LOCATIONS SHOWN ARE SCHEMATIC AND APPROXIMATE. EXACT LOCATIONS SHALL BE FIELD VERIFIED DURING ROUGH-IN WITH ARCHITECTURAL ELEVATIONS, CASEWORK SHOP DRAWINGS, FURNITURE, ETC. AND SHALL BE COORDINATED WITH OTHER TRADES TO AVOID CONFLICT WITH OTHER EQUIPMENT.
- ELECTRICAL AND COMMUNICATIONS OUTLETS SHOWN IN THE SAME LOCATION, SHALL BE MOUNTED ON OPPOSITE SIDES OF THE SAME STUD. COORDINATE BETWEEN ELECTRICAL AND COMMUNICATIONS PLANS.

POWER/COMMUNICATIONS FLOOR PLAN

SCALE: 1/4"=1'-0"

REV	DATE	BY	DESCRIPTION

DESIGNED RP
DRAWN DM
CHECKED JD
DATE SEPTEMBER 2013

REGISTERED PROFESSIONAL ENGINEER WILLIAM A. THOMA NO. 10757 ELECTRICAL STATE OF CALIFORNIA
EXP. 06/30/15 REF. #13-8007

thoma ENGINEERING
THOMA ELECTRIC, INC.
P.O. Box 1167 – 3562 Empleo St.
San Luis Obispo, CA 93406
Phone: (805) 543-3850
Fax: (805) 543-3829
cad@thomaelec.com

carollo

SAN LUIS OBISPO COUNTY

SAN LUIS OBISPO COUNTY
LOS OSOS WATER RECYCLING FACILITY PROJECT
ELECTRICAL
ADMINISTRATION BUILDING
POWER/COMMUNICATIONS FLOOR PLAN

VERIFY SCALES
BAR IS ONE INCH ON ORIGINAL DRAWING
0 1"
IF NOT ONE INCH ON THIS SHEET, ADJUST SCALES ACCORDINGLY

JOB NO. 8930A.11
DRAWING NO. 05AE04
SHEET NO. OF XX

K:\DWGS\13-8007\13-8007_05AE04.dwg – lynda – Sep 10, 2013 – 3:48pm

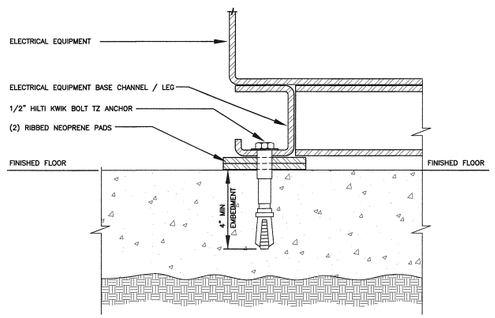

NOTES:
1. INSTALL ANCHORS AT 24" O.C. AROUND ENTIRE PERIMETER OF EQUIPMENT, WHERE APPLICABLE.

7 TYPICAL TRANSFORMER MOUNTING DETAIL
NTS

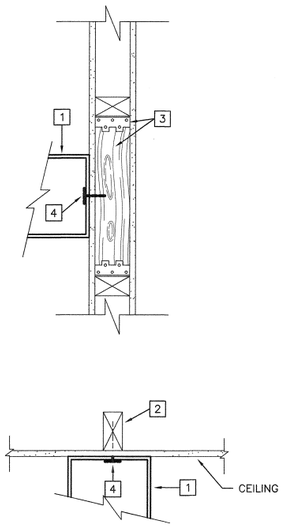

REFERENCE NOTES

1. SMALL SURFACE MOUNTED LIGHT FIXTURE (20 LBS OR LESS).
2. FRAMING ABOVE OR BLOCKING WITH A35 CLIP AT EACH END.
3. PROVIDE 3x6 BLOCKING WITH A35 CLIP AT EACH END WHERE VERTICAL STUD IS NOT AVAILABLE FOR ATTACHMENT.
4. ATTACH WITH #8x1-1/2" WOOD SCREW AND 1/2" DIAMETER WASHER. (2) REQUIRED PER FIXTURE.

1 TYPICAL WALL / CEILING MOUNTED LIGHT FIXTURE MOUNTING DETAIL
NTS

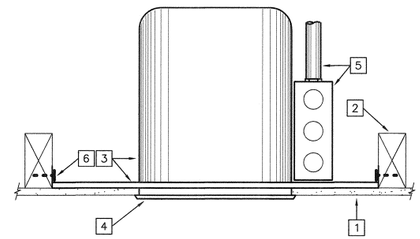

REFERENCE NOTES

1. CEILING MATERIAL
2. FRAMING ABOVE OR BLOCKING BETWEEN AS REQUIRED.
3. RECESSED HOUSING WITH EXPANDABLE MOUNTING BARS.
4. FIXTURE TRIM
5. OUTLET BOX/BRANCH CIRCUIT
6. ATTACH TO FRAMING WITH #8x1-1/2" WOOD SCREWS. TOTAL (4) PER FIXTURE.

2 TYPICAL RECESSED DOWNLIGHT MOUNTING DETAIL
NTS

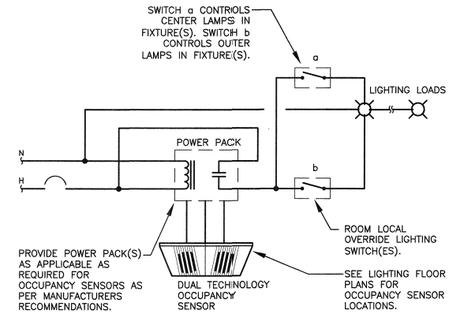

3 TYPICAL OCCUPANCY SENSOR WIRING DIAGRAM

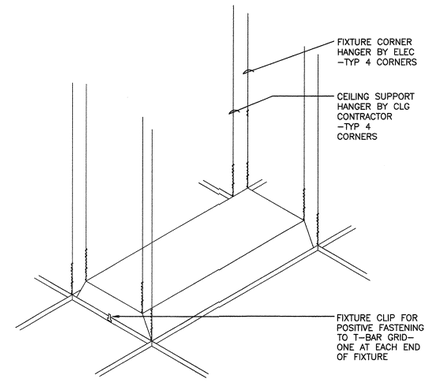

4 TYPICAL TROFFER SUPPORT DETAIL
NTS

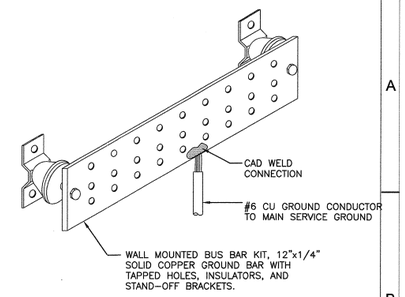

5 TYPICAL GROUND BUS BAR DETAIL
NTS

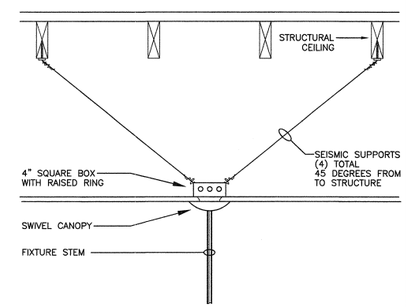

6 TYPICAL PENDANT FIXTURE MOUNTING DETAIL
NTS

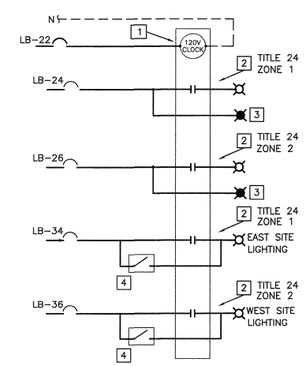

REFERENCE NOTES

1. INTERMATIC #ET SEIRES 4 POLE PROGRAMMABLE TIME SWITCH PER CALIFORNIA ENERGY CODE (CEC) 119(c). MOUNT IN ELECTRIC ROOM ABOVE PANEL LB.
2. PROGRAM CHANNEL "ON" AT DUSK, "OFF" LATE EVENING AS SPECIFIED BY THE OWNER FOR BUILDING MOUNTED EXTERIOR LIGHTING CIRCUIT AS SHOWN.
3. PROVIDE HOT LEG OF BRANCH CIRCUIT TO EMERGENCY BATTERY PACKS, (AS APPLICABLE).
4. SITE LIGHTING MANUAL CONTROL SWITCH, SEE LIGHTING FLOOR PLAN FOR LOCATION.

8 BUILDING EXTERIOR LIGHTING CONTROLS
NTS

REV	DATE	BY	DESCRIPTION

DESIGNED RP
DRAWN DM
CHECKED JD
DATE SEPTEMBER 2013

REGISTERED PROFESSIONAL ENGINEER WILLIAM A. THOMA NO. 10757 ELECTRICAL STATE OF CALIFORNIA
EXP. 06/30/15 REF. #13-8007

thoma ENGINEERING
THOMA ELECTRIC, INC.
P.O. Box 1167 - 3562 Empleo St.
San Luis Obispo, CA 93406
Phone: (805) 543-3850
Fax: (805) 543-3829
cad@thomaelec.com

carollo®

SAN LUIS OBISPO COUNTY

SAN LUIS OBISPO COUNTY
LOS OSOS WATER RECYCLING FACILITY PROJECT
ELECTRICAL
ADMINISTRATION BUILDING
ELECTRICAL DETAILS

VERIFY SCALES
BAR IS ONE INCH ON ORIGINAL DRAWING
0 1"
IF NOT ONE INCH ON THIS SHEET, ADJUST SCALES ACCORDINGLY

JOB NO. 8930A.11
DRAWING NO. 05AE05
SHEET NO. OF XX

K:\DWGS\13-8007\13-8007_05AE05.dwg - lynda - Sep 10, 2013 - 3:48pm

SEE NOTE: 100A,120/208 V, 3Ø, 4W, MLO
42 FULL SIZE BOLT-ON CB SPACES
42K AIC PANEL & BRANCH CB'S
WITH 100A MCB

(N) PANEL
LB

SURFACE MOUNT, NEMA 1
LOCATION: ELEC. ROOM
WITH EQUIP'T GND BUS

SEE NOTE

	CKT #	DESCRIPTION	AMP CB / # POLE	WIRE SIZE	PHASE A VA	PHASE B VA	PHASE C VA	WIRE SIZE	AMP CB / # POLE	DESCRIPTION	CKT #	
3	1	BREAK ROOM DISHWASHER	20 / 1	12	1000 / 1000			12	20 / 1	MICROWAVE OVEN	2	3
3	3	CONF./WAITING RECEPTACLES	20 / 1	12		900 / 1500		10	30 / 2	LAB 208V RECEPTACLE	4	
3	5	CONF./WAITING RECEPTACLES	20 / 1	12			540 / 1500	10		"	6	
3	7	BREAK ROOM RECEPTACLES	20 / 1	12	1000 / 900			12	20 / 1	OFFICE/RECEPTION RECEPTACLE	8	3
3	9	BREAK ROOM RECEPTACLES	20 / 1	12		1000 / 900		12	20 / 1	OFFICE/RECEPTION RECEPTACLE	10	3
3	11	BREAK ROOM REFRIGERATOR	20 / 1	12			1000 / 720	12	20 / 1	OFFICE/RECEPTION RECEPTACLE	12	3
3	13	LAB REFRIGERATOR	20 / 1	12	1000 / 900			12	20 / 1	BREAK/TOILET RECEPTACLE	14	3
3	15	LAB RECEPTACLES	20 / 1	12		1500 / 720		12	20 / 1	BREAK/TOILET RECEPTACLE	16	3
3	17	LAB RECEPTACLES	20 / 1	12			1500 / 720	12	20 / 1	BREAK/TOILET RECEPTACLE	18	3
3	19	LAB DISHWASHER	20 / 1	12	1000 / 100			12	20 / 1	FIRE ALARM CONTROL PANEL	20	3,4
3	21	LAB RECEPTACLES	20 / 1	12		500 / 100		12	20 / 1	LIGHTING CONTROLS	22	3
3	23	LAB RECEPTACLES	20 / 1	12			500 / 150	12	20 / 1	EXTERIOR LIGHTING	24	1,2,3
3	25	LAB FUME HOOD	20 / 1	12	500 / 150			12	20 / 1	EXTERIOR LIGHTING	26	1,2,3
3	27	LAB RECEPTACLES	20 / 1	12		500 / 800		12	20 / 1	INTERIOR LIGHTING	28	1,3
3	29	OFFICE RECEPTACLES	20 / 1	12			720 / 950	12	20 / 1	INTERIOR LIGHTING	30	1,3
3	31	VACUUM PUMP	20 / 1	12	500 / 1200			12	20 / 1	INTERIOR LIGHTING	32	1,3
3	33	LAB AUTOCLAVE	20 / 1	12		500 / 1000		12	20 / 1	SITE LIGHTING	34	1,2,5
	35	SPARE	20 / 1				1000	12	20 / 1	SITE LIGHTING	36	1,2,5
	37	SPARE	20 / 1							SPACE	38	
	39	SPARE	20 / 1							SPACE	40	
	41	SPARE	20 / 1							SPACE	42	
		CONNECTED LOAD (VA) =			9250	9920	9300					
		25% OF CONTINUOUS LOAD =			338	450	525					
		TOTAL (VA) =			9588	10370	9825					
		TOTAL ÷ 120 VOLT =			80 A	86 A	82 A					

SEE NOTE: 225A, 120/208V, 3Ø, 4W, MCB
42 FULL SIZE BOLT-ON CB SPACES
42K AIC PANEL & BRANCH CB'S
WITH 225A MCB

(N) PANEL
LA

SURFACE MOUNT, NEMA 1
LOCATION: ELEC. ROOM
WITH EQUIP'T GND BUS

SEE NOTE

	CKT #	DESCRIPTION	AMP CB / # POLE	WIRE SIZE	PHASE A VA	PHASE B VA	PHASE C VA	WIRE SIZE	AMP CB / # POLE	DESCRIPTION	CKT #	
	1	DS-1	20 / 2	12	1500 / 1176			12	20 / 1	F-1	2	3
	3	"		12		1500 / 1656		12	20 / 1	F-2	4	3
	5	CU-1	40 / 2	8			2280 / 240	12	20 / 1	WH-1	6	3
	7	"		8	2280				20 / 1	SPARE	8	
	9	CU-2	50 / 2	8		2520 / 1500		10	30 / 2	FUME HOOD 208V RECEPTACLE	10	
	11	"		8			2520 / 1500	10		"	12	
	13	LAB 208V RECEPTACLE	30 / 2	10	1500			6	60 / 3	SURGE PROTECTION DEVICE	14	
	15	"		10		1500		6		"	16	
	17	LAB 208V RECEPTACLE	30 / 2	10			1500	6		"	18	
	19	"		10	1500 / 100			12	20 / 1	FIRE SPKLR BELL	20	3
	21	LAB 208V RECEPTACLE	30 / 2	10		1500 / 800		12	20 / 1	EF-2, EF-3	22	3
	23	"		10			1500 / 360	12	20 / 1	GFI RECEPT ON ROOF	24	3
	25	LAB 208V RECEPTACLE	30 / 2	10	1500 / 800			12	20 / 1	EF-1, FSC	26	3
	27	"		10		1500 / 840		12	20 / 3	EF-6	28	
3	29	SERVER ROOM RECEPTACLE	20 / 1	12			1500 / 840	12		EF-6	30	
3	31	SERVER ROOM RECEPTACLE	20 / 1	12	1000 / 840			12			32	
3	33	SERVER ROOM RECEPTACLE	20 / 1	12		1000				SPACE	34	
3	35	SERVER ROOM RECEPTACLE	20 / 1	12			1000			SPACE	36	
3	37	WH-1	20 / 1	12	240 / 8088			2	100 / 3	PANEL "LB"	38	
	39	SPARE	20 / 1			9870		2		PANEL "LB"	40	
	41	SPARE	20 / 1				9825	2		PANEL "LB"	42	
		CONNECTED LOAD (VA) =			20524	24186	23065					
		25% OF CONTINUOUS LOAD =			0	0	0					
		TOTAL (VA) =			20524	24186	23065					
		TOTAL ÷ 120 VOLT =			171 A	202 A	192 A					

SEE NOTE: 200A, 480Ø8V, 3Ø, 4W, MCB
24 FULL SIZE BOLT-ON CB SPACES
42K AIC PANEL & BRANCH CB'S
WITH 200A MCB

(N) PANEL
HA
SERVICE ENTRANCE RATED

SURFACE MOUNT, NEMA 1
LOCATION: ELEC. ROOM
WITH EQUIP'T GND BUS

SEE NOTE

CKT #	DESCRIPTION	AMP CB / # POLE	WIRE SIZE	PHASE A VA	PHASE B VA	PHASE C VA	WIRE SIZE	AMP CB / # POLE	DESCRIPTION	CKT #
1	SPACE						6	60 / 3	SURGE PROTECTION DEVICE	2
3	SPACE						6		"	4
5	SPACE						6		"	6
7	SPACE								SPACE	8
9	SPACE								SPACE	10
11	SPACE								SPACE	12
13	SPACE								SPACE	14
15	SPACE								SPACE	16
17	SPACE								SPACE	18
19	TRANSFORMER "TA"	100 / 3	2	20524					SPACE	20
21	"		2		24186					22
23	"		2			23065				24
	CONNECTED LOAD (VA) =			20524	24186	23065				
	25% OF CONTINUOUS LOAD =			0	0	0				
	TOTAL (VA) =			20524	24186	23065				
	TOTAL ÷ 277 VOLT =			74 A	86 A	83 A				

PANEL SCHEDULE NOTES

1. LONG CONTINUOUS LOAD (LCL). ADDITIONAL 25% ADDED AT BOTTOM OF PANEL. FEEDER CALCULATED AT 125% OF TOTAL CONNECTED LOAD.
2. ROUTE BRANCH CIRCUIT THROUGH LIGHTING CONTROLS. SEE DIAGRAM ON SHEET 05AE05.
3. PROVIDE SEPARATE NEUTRAL WITH THIS CIRCUIT.
4. PROVIDE LOCKING DEVICE ON THIS CIRCUIT BREAKER.
5. SITE LIGHTING AND SITE LIGHTING BRANCH CIRCUIT IS PROVIDED AND INSTALLED BY OTHERS, COORDINATE WORK WITH INSTALLING CONTRACTOR.

LUMINAIRE SCHEDULE

TYPE	ILLUSTRATION	MANUFACTURER	CATALOG NO.	VOLTAGE	MAX. VA.	LAMPING	MOUNTING	DESCRIPTION
A	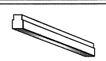	LITHONIA	ZL2-L24-2300L-MVOLT	120	20	LED	SURFACE	2' LED STRIP LIGHT MOUNTED ABOVE LENSE
B	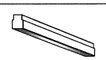	LITHONIA	ZL2-L48-2300L-MVOLT	120	32	LED	SURFACE	4' LED STRIP LIGHT MOUNTED ABOVE LENSE
C	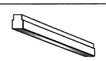	LITHONIA	PTNSL4-WD-MVOLT	120	47	LED	CABLE	4' CABLE MOUNTED LED STRIP LIGHT
D	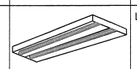	LITHONIA	2VTL4-40L-ADP-D40-LP835	120	40	LED	RECESSED GRID	2'x4' RECESSED LED TROFFER WITH SYMMETRICAL DISTRIBUTION AND DIMMING DRIVER
E	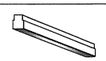	LITHONIA	ZL2-L48-2300L-MVOLT	120	32	LED	SURFACE	1'x4' SURFACE LED FIXTURE
P		METALUMEN	CALEDONIA SERIES	120	60	LED	PENDANT	8' LONG PENDANT, DIRECT LED FIXTURE
P1		METALUMEN	CALEDONIA SERIES	120	60	LED	PENDANT	8' LONG PENDANT, DIRECT LED FIXTURE WITH 90 MIN. BATTERY BACK-UP
P2		METALUMEN	CALEDONIA SERIES	120	192	LED	PENDANT	PENDANT MOUNTED DIRECT LED DIMMABLE FIXTURE, PROVIDE IN CONFIGURATION AS SHOWN.
P3		METALUMEN	CALEDONIA SERIES	120	60	LED	PENDANT	4' LONG PENDANT, DIRECT LED DIMMABLE FIXTURE

TYPE	ILLUSTRATION	MANUFACTURER	CATALOG NO.	VOLTAGE	MAX. VA.	LAMPING	MOUNTING	DESCRIPTION
R		GOTHAM	EVO-35/14-6AR-120	120	31	LED	RECESSED	6" RECESSED DIMMABLE LED DOWNLIGHT
R1		GOTHAM	EVO-35/14-6AR-120-LEL	120	31	LED	RECESSED	6" RECESSED LED DOWNLIGHT WITH EMERGENCY BATTERY PACK
R2		GOTHAM	EVO-35/14-6DFR-120	120	22	LED	RECESSED	6" RECESSED LED DOWNLIGHT WITH SHOWER LENS
S	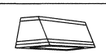	LITHONIA	CSXW-LED-30B350-SR3-MVOLT	120	38	LED	WALL	WALL MOUNTED LED FLOOD LIGHT FIXTURE WITH ASYMMETRICAL DISTRIBUTION
S1		GOTHAM	EVO-35/10-6DFR-120	120	31	LED	RECESSED	6" RECESSED LED DOWNLIGHT
S2		GOTHAM	EVO-35/10-6DFR-120-LEL	120	31	LED	RECESSED	6" RECESSED LED DOWNLIGHT WITH EMERGENCY BATTERY PACK
X		LITHONIA	LES-1-R-120/277-ELN	120		LED	SURFACE	DIE CAST EXIT SIGN WITH EMERGENCY BATTERY PACK.

LIGHTING FIXTURE SCHEDULE NOTES

- ILLUSTRATIONS AND/OR DIMENSIONS ARE APPROXIMATIONS ONLY INTENDED TO REPRESENT BASIC FIXTURE TYPE; DO NOT USE AS EXACT INFORMATION SOURCE. REFER TO MANUFACTURER CUT SHEETS.
- EXACT LOCATIONS: BEFORE CONSTRUCTION, VERIFY WITH ARCHITECT EXACT LOCATIONS AND MOUNTING HEIGHTS OF ALL LIGHT FIXTURES. SEE ARCHITECTURAL REFLECTED CEILING PLANS AND ELEVATIONS AS APPLICABLE.
- FIXTURE BRANCH CIRCUIT THROUGH-WIRING: VERIFY AND COMPLY WITH FIXTURE MANUFACTURER RESTRICTIONS AS DETERMINED BY UL. & NEC.
- VERIFY CEILING TYPES/FINISHES FOR ALL RECESSED FIXTURES PRIOR TO FORWARDING SUBMITTALS.
- ALL FLAT PRISMATIC LENSES IN FLUORESCENT FIXTURES SHALL BE MINIMUM .125" THICK.
- ALL EQUIPMENT PROVIDED FOR THIS PROJECT SHALL COMPLY WITH THE REQUIREMENTS OF (ARRA).
- ALL LIGHTING FIXTURES SHALL MEET COUNTY DESIGN STANDARDS. THIS SHALL INCLUDE PROPER SHIELDING, PROPER ORIENTATION, AND APPLICABLE HEIGHT STANDARDS. ALL LIGHTING FIXTURES SHALL BE SHIELDED SO THAT NEITHER THE LAMP NOR THE RELATED REFLECTOR INTERIOR SURFACE IS VISIBLE FROM ADJACENT PROPERTIES OF PUBLIC AREAS. LIGHT HOODS SHALL BE DARK COLORED. LIGHTING ASSOCIATED WITH ALL PROJECT COMPONENTS SHALL BE THE MINIMUM NEEDED FOR PUMP STATION OPERATIONS WHICH REQUIRE LIGHTING FOR OPERATIONS AND/OR DURING EMERGENCY SITUATIONS. LIGHTING FIXTURE SUBMITTALS SHALL PROVIDE CONFIRMATION OF COMPLIANCE WITH THESE REQUIREMANTS.

REV	DATE	BY	DESCRIPTION

DESIGNED RP
DRAWN DM
CHECKED JD
DATE SEPTEMBER 2013

REGISTERED PROFESSIONAL ENGINEER WILLIAM A. THOMA NO. E10757 ELECTRICAL STATE OF CALIFORNIA
EXP. 06/30/15 REF. #13-8007

thoma ENGINEERING
THOMA ELECTRIC, INC.
P.O. Box 1167 – 3562 Empleo St.
San Luis Obispo, CA 93406
Phone: (805) 543-3850
Fax: (805) 543-3829
cad@thomaelec.com

carollo

SAN LUIS OBISPO COUNTY

SAN LUIS OBISPO COUNTY
LOS OSOS WATER RECYCLING FACILITY PROJECT
ELECTRICAL
ADMINISTRATION BUILDING
ELECTRICAL SCHEDULES

VERIFY SCALES
BAR IS ONE INCH ON ORIGINAL DRAWING
0 1"
IF NOT ONE INCH ON THIS SHEET, ADJUST SCALES ACCORDINGLY

JOB NO. 8930A.11
DRAWING NO. 05AE06
SHEET NO. OF XX

K:\DWGS\13-8007\13-8007_05AE06.dwg – lynda – Sep 10, 2013 – 3:48pm

INDOOR LIGHTING POWER ALLOWANCE — LTG-3C

Project Name: LOS OSOS WATER RECYCLING FACILITY - ADMIN. BLDG.
Date: 5/9/2013

ALLOWED LIGHTING POWER (Chose One Method)

A Separate LTG-3C must be filled out for Conditioned and Unconditioned Spaces. Indoor Lighting Power Allowances listed on this page are only for:
☑ CONDITIONED SPACES ☐ UNCONDITIONED SPACES

COMPLETE BUILDING METHOD

BUILDING CATEGORY (From §146 Table 146-E)	WATTS PER (ft²)	X	COMPLETE BLDG. AREA	=	ALLOWED WATTS
			TOTALS		
			AREA		WATTS

AREA CATEGORY METHOD

BUILDING CATEGORY (From §146 Table 146-F)	WATTS PER (ft²)	X	Area ft²	=	ALLOWED WATTS
Lounge, Recreation	1.10		227		250
Office > 250 sqft	0.90		262		236
Office <= 250 sqft	1.10		170		187
Corridor/Restrooms/Support	0.60		1,179		707
Convention/Conference/Meeting	1.40		428		598
Electrical, Mechanical Room	0.70		206		144
Laboratory, Scientific	1.40		390		548
Lobby, Main Entry	1.50		182		273
			TOTALS		3,042		2,940
			AREA		WATTS

TAILORED METHOD

Total Allowed Watts using the Tailored Method taken from LTG-4C (Page 1 of 4) Row 3: 0

The indoor lighting power allowance using the Tailored Method of compliance shall be determined using the LTG-4C set of forms. A separate set of LTG-4C forms shall be filled out for CONDITIONED and UNCONDITIONED spaces

CERTIFICATE OF COMPLIANCE (Part 3 of 4) — LTG-1C

Project Name: LOS OSOS WATER RECYCLING FACILITY - ADMIN. BLDG.
Date: 5/9/2013

INDOOR LIGHTING SCHEDULE and FIELD INSPECTION ENERGY CHECKLIST

Fill in controls for all spaces: a) area controls, b) multi-level controls, c) manual daylighting controls for daylit areas > 250 ft², automatic daylighting controls for daylit areas > 2,500 ft², d) shut-off controls, e) display lighting controls, f) tailored lighting controls – general lighting controlled separately from display, ornamental and display case lighting and g) demand responsive automatic controls for retail stores > 50,000 ft², in accordance with Section 131.

MANDATORY LIGHTING CONTROLS – FIELD INSPECTION ENERGY CHECKLIST

Type/ Description	Number of Units	Location in Building	Special Features	Field Inspector Pass	Fail
OCCUPANCY SENSORS	-	-	☐	☐	☐
			☐	☐	☐
			☐	☐	☐
			☐	☐	☐
			☐	☐	☐
			☐	☐	☐
			☐	☐	☐
			☐	☐	☐
			☐	☐	☐
			☐	☐	☐
			☐	☐	☐
			☐	☐	☐
			☐	☐	☐
			☐	☐	☐
			☐	☐	☐
			☐	☐	☐
			☐	☐	☐
			☐	☐	☐
			☐	☐	☐
			☐	☐	☐
			☐	☐	☐
			☐	☐	☐
			☐	☐	☐
			☐	☐	☐
			☐	☐	☐
			☐	☐	☐
			☐	☐	☐

SPECIAL FEATURES INSPECTION CHECKLIST (See Page 2 of 4 of LTG-1C)

The local enforcement agency should pay special attention to the items specified in this checklist. These items require special written justification and documentation, and special verification. The local enforcement agency determines the adequacy of the justification, and may reject a building or design that otherwise complies based on the adequacy of the special justification and documentation submitted.

Field Inspector's Notes or Discrepancies:

CERTIFICATE OF COMPLIANCE (Part 1 of 4) — LTG-1C

Project Name: LOS OSOS WATER RECYCLING FACILITY - ADMIN. BLDG.
Date: 5/9/2013

Project Address	Climate Zone	Total Cond. Floor Area	Unconditioned Floor Area
LOS OSOS	5	3,042	0

GENERAL INFORMATION

Building Type: ☑ Nonresidential ☐ High-Rise Residential ☐ Hotel/Motel Guest Room ☐ School ☐ Relocatable Public School ☑ Conditioned Spaces ☐ Unconditioned Spaces

Phase of Construction: ☑ New Construction ☐ Addition ☐ Alteration

Method of Compliance: ☐ Complete Building ☑ Area Category ☐ Tailored

Documentation Author's Declaration Statement

I certify that this Certificate of Compliance documentation is accurate and complete.

Name	William Thoma	Signature	
Company	Thoma Electric, Inc	Date	5/9/2013
Address	3562 Empleo St.	CEA # CEPE #	
City/State/Zip	San Luis Obispo, CA 93401	Phone	805-543-3850

The Principal Lighting Designer's Declaration Statement

- I am eligible under Division 3 of the California Business and Professional Code to accept responsibility for the lighting design.
- This Certificate of Compliance identifies the lighting features and performance specifications required for compliance with Title 24, Pages 1 and 6 of the California Code of Regulations.
- The design features represented on this Certificate of Compliance are consistent with the information provided to document this design on the other applicable compliance forms, worksheets, calculations, plans and specifications submitted to the enforcement agency for approval with this building permit application.

Name	William Thoma	Signature	
Company	Thoma Electric Inc.	Phone	805-543-3850
Address	3562 Empleo St.	License #	10757
City/State/Zip	San Luis Obispo, CA 93401	Date	5/9/2013

Lighting Mandatory Measures
Indicate location on building plans of Mandatory Measures Note Block: 05AE07

LIGHTING COMPLIANCE FORMS & WORKSHEETS (check box if worksheets is included)

For detailed instructions on the use of this and all Energy Efficiency Standards compliance forms, please refer to the Nonresidential Manual published by the California Energy Commission.

☑	LTG-1C Pages 1 through 4	Certificate of Compliance. All Pages required on plans for all submittals.
☐	LTG-3C	Lighting Controls Credit Worksheet
☑	LTG-3C	Indoor Lighting Power Allowance
☐	LTG-4C Pages 1 through 4	Tailored Method Worksheet
☐	LTG-5C Pages 1 and 2	Line Voltage Track Lighting Worksheet

LIGHTING MANDATORY MEASURES: NONRESIDENTIAL — LTG-MM

Project Name: LOS OSOS WATER RECYCLING FACILITY - ADMIN. BLDG.
Date: 5/9/2013

Indoor Lighting Measures:

§131(d):	**Shut-off Controls**	
	1.	For every floor, all interior lighting systems shall be equipped with a separate automatic control to shut off the lighting. This automatic control shall meet the requirements of Section 119 and may be an occupancy sensor, automatic time switch, or other device capable of automatically shutting off the lighting.
	2.	Override for Building Lighting Shut-off: The automatic building shut-off system is provided with a manual, accessible override switch in sight of the lights. The area of override is not to exceed 5,000 square feet.
§119(h):		Automatic Control Devices Certified: All automatic control devices specified are certified, all alternate equipment shall be certified and installed as directed by the manufacturer.
§111:		Fluorescent Ballast and Luminaires Certified: All fluorescent fixtures specified for the project are certified and listed in the Directory. All installed fixtures shall be certified.
§131(a):		Individual Room/Area Controls: Each room and area in this building is equipped with a separate switch or occupancy sensor device for each area with floor-to-ceiling walls.
§131(b):		Uniform Reduction for Individual Rooms: All rooms and areas greater than 100 square feet and more than 0.8 watts per square foot of lighting load shall be controlled with bi-level switching for uniform reduction of lighting within the room.
§131(c):		Daylight Area Control: All rooms with windows and skylights that are greater than 250 square feet and that allow for the effective use of daylight in the area shall have 50% of the lamps in each daylit area controlled by a separate switch; or the effective use of daylight cannot be accomplished because the windows are continuously shaded by a building on the adjacent lot. Diagram of shading during different times of the year is included on plans.
§131(c):		Display Lighting. Display lighting shall be separately switched on circuits that are 20 amps or less.6.

Outdoor Lighting Measures:

§130(c)1:	Mandatory lighting power determination for medium base sockets without permanently installed ballasts
§132(a):	All permanently installed luminaires with lamps rated over 100 Watts either have a lamp efficacy of at least 60 lumens per Watt or are controlled by a motion sensor.
§132(b):	All Luminaires with lamps rated greater than 175 Watts in hardscape area, including parking lots, building entrances, canopies, and all outdoor sales areas meet the Cutoff Requirements.
§132(c)1:	All permanently installed outdoor lighting meets the control requirements listed.
§132(c):	Building facades, parking lots, garages, canopies, and outdoor sales areas meet the Multi-Level Lighting Requirements listed

CERTIFICATE OF COMPLIANCE (Part 4 of 4) — LTG-1C

Project Name: LOS OSOS WATER RECYCLING FACILITY - ADMIN. BLDG.
Date: 5/9/2013

CONDITIONED AND UNCONDITIONED SPACE LIGHTING MUST NOT BE COMBINED FOR COMPLIANCE

Indoor Lighting Power for Conditioned Spaces		Watts	Indoor Lighting Power for Unconditioned Spaces		Watts
Installed Lighting (from Conditioned LTG-1C, Page 2)		2,005	**Installed** Lighting (from Unconditioned LTG-1C, Page 2)		0
Lighting Control Credit Conditioned Spaces (from LTG-2C)	-	0	Lighting Control Credit Unconditioned Spaces (from LTG-2C)	-	0
Adjusted **Installed** Lighting Power	=	2,005	Adjusted **Installed** Lighting Power	=	0
Complies if **Installed ≤ Allowed**		↕	Complies if **Installed ≤ Allowed**		↕
Allowed Lighting Power Conditioned Spaces (from LTG-3C or PERF-1)		2,940	**Allowed** Lighting Power Unconditioned Spaces (from LTG-3C)		0

Required Acceptance Tests

Designer:
This form is to be used by the designer and attached to the plans. Listed below is the acceptance test for the Lighting system, **LTG-2A and LTG-3A**. The designer is required to check the acceptance tests and list all control devices serving the building or space shall be certified as meeting the Acceptance Requirements for Code Compliance. If all the lighting system or control off a certain type requires a test, list the different lighting and the number of systems. The NA7 Section in the Appendix of the Nonresidential Reference Appendices Manual describes the test. Since this form will be part of the plans, completion of this section will allow the responsible party to budget for the scope of work appropriately. **Forms can be grouped by type of Luminaire controlled.**

Enforcement Agency:
Systems Acceptance. Before Occupancy Permit is granted for a newly constructed building or space or when ever new lighting system with controls is installed in the building or space shall be certified as meeting the Acceptance Requirements.
The **LTG-2A and LTG-3A** forms are not considered complete forms and are not to be accepted by the enforcement agency unless the boxes are checked and/or filled and signed. In addition, a Certificate of Acceptance forms shall be submitted to the enforcement agency that certifies plans, specifications, installation certificates, and operating and maintenance information meet the requirements of §10-103(b) of Title 24 Part 6. The field inspector must receive the properly filled out and signed forms before the building can receive final occupancy. A copy of the **LTG-2A and LTG-3A** for each different lighting luminaire control(s) must be provided to the owner of the building for their records.

Luminaires Controlled

Equipment Requiring Testing	Description	Number of Luminaires controlled	Location	LTG-2A and LTG-3A Controls and Sensors and Automatic Daylighting Controls Acceptance
				☐
				☐
				☐
				☐
				☐
				☐
				☐
				☐
				☐
				☐
				☐
				☐
				☐
				☐
				☐
				☐
				☐
				☐
				☐
				☐
				☐
				☐

CERTIFICATE OF COMPLIANCE (Part 2 of 4) — LTG-1C

Project Name: LOS OSOS WATER RECYCLING FACILITY - ADMIN. BLDG.
Date: 5/9/2013

INDOOR LIGHTING SCHEDULE and FIELD INSPECTION ENERGY CHECKLIST

Installation Certificate, LTG-1- INST (Retain a copy and verify form is completed and signed.) **Field Inspector** ☐

Certificate of Acceptance, LTG-2A and LTG-3A (Retain a copy and verify form is completed and signed.) **Field Inspector** ☐

A separate Lighting Schedule Must Be Filled Out for Conditioned and Unconditioned Spaces Installed Lighting Power listed on this Lighting Schedule is only for:

☑ **CONDITIONED SPACE** ☐ **UNCONDITIONED SPACE**

☑ The actual indoor lighting power listed below includes all installed permanent and portable lighting systems in accordance with §146(a).

☑ Only for offices: Up to the first 0.2 watts per square foot of portable lighting shall not be required to be included in the calculation of actual indoor lighting power density in accordance with the Exception to §146(a). All portable lighting in excess of 0.2 watts per square foot is totaled below.

A	Luminaire (Type, Lamps, Ballasts) B	C	Installed Watts D	E How wattage Was determined: CEC Default From NA8	E According To §130 (d or e)	F	G	H Field Inspector[2] Pass	Fail
None or Item Tag	Complete Luminaire Description[1] (i.e. 3 lamp fluorescent traffer. Prefix, are dimmable electronic ballasts)		Watts per Luminaire[1]			Number of Luminaires	Installed Watts (D X F)		
A	20W LED LED STRIP LIGHT		20.0	☐	☑	1	20	☐	☐
B	40W LED TROFFER		40.0	☐	☑	1	40	☐	☐
B	32W LED STRIP LIGHT		32.0	☐	☑	2	64	☐	☐
C	47W LED STRIP LIGHT		47.0	☐	☑	2	94	☐	☐
D	40W LED TROFFER		40.0	☐	☑	12	480	☐	☐
E	32W LED STRIP LIGHT		32.0	☐	☑	3	96	☐	☐
P	60W LED LINEAR PENDANT		60.0	☐	☑	1	60	☐	☐
P1	60W LED LINEAR PENDANT		60.0	☐	☑	3	180	☐	☐
P2	192W LED		92.0	☐	☑	1	92	☐	☐
P3	60W LED LINEAR PENDANT		60.0	☐	☑	1	60	☐	☐
R	31W LED DOWNLIGHT		31.0	☐	☑	25	775	☐	☐
R2	22W LED DOWNLIGHT		22.0	☐	☑	2	44	☐	☐
				☐	☐			☐	☐
				☐	☐			☐	☐
				☐	☐			☐	☐
				☐	☐			☐	☐
				☐	☐			☐	☐
				☐	☐			☐	☐
				☐	☐			☐	☐
				☐	☐			☐	☐
			Installed Watts Page Total:				2,005		
Building total number of pages:			Installed Watts Building Total (Sum of all pages)				2,005		
			Enter into LTG-1C Page 4 of 4						

1. Wattage shall be determined according to Section 130 (d and e). Wattage shall be rating of light fixture, not rating of bulb.
2. If Fail then describe on Page 2 of the Inspection Checklist Form and take appropriate action to correct. Verify building plans if necessary.

REV	DATE	BY	DESCRIPTION

DESIGNED RP
DRAWN DM
CHECKED JD
DATE SEPTEMBER 2013

REGISTERED PROFESSIONAL ENGINEER WILLIAM A. THOMA No. 10757 ELECTRICAL STATE OF CALIFORNIA
EXP. 06/30/15 REF. #13-8007

thoma ENGINEERING
THOMA ELECTRIC, INC.
P.O. Box 1167 – 3562 Empleo St.
San Luis Obispo, CA 93406
Phone: (805) 543-3850
Fax: (805) 543-3829
cad@thomaelec.com

carollo®

SAN LUIS OBISPO COUNTY

SAN LUIS OBISPO COUNTY
LOS OSOS WATER RECYCLING FACILITY PROJECT
ELECTRICAL
ADMINISTRATION BUILDING
INTERIOR TITLE 24 COMPLIANCE FORMS

VERIFY SCALES
BAR IS ONE INCH ON ORIGINAL DRAWING
0 1"
IF NOT ONE INCH ON THIS SHEET, ADJUST SCALES ACCORDINGLY

JOB NO. 8930A.11
DRAWING NO. 05AE07
SHEET NO. OF XX

K:\DWGS\13-8007\13-8007_05AE07.dwg – lynda – Sep 10, 2013 – 3:49pm

OUTDOOR LIGHTING WORKSHEET (Part 1 of 3) OLTG-2C

Project Name: LOS OSOS WATER RECYCLING FACILITY - ADMIN. BLDG.
Date: 5/9/2013

A. LIGHTING POWER ALLOWANCE FOR GENERAL HARDSCAPE

AREA WATTAGE ALLOWANCE (AWA)			LINEAR WATTAGE ALLOWANCE (LWA)			INITIAL WATTAGE ALLOWANCE	TOTAL GENERAL HARDSCAPE LIGHTING ALLOWANCE
A	B	C	D	E	F	G	H
Illuminated Hardscape Area	AWA Per Square Foot	AWA (A X B)	Perimeter Length of General Hardscape	LWA Per Linear Foot	LWA (D X E)	IWA (Watts)	C + F + G
322	0.092	30	131	0.920	121	770	920
Enter total into OLTG-1C; Page 4 of 4; Row A; Lighting Power Allowance for General Hardscape							920

☒ Yes AWA, LWA, and IWA from Table 147-A was used as appropriate for the Outdoor Lighting Zone

B. SPECIFIC APPLICATION LIGHTING WATTAGE ALLOWANCE PER UNIT LENGTH (Available only for sales frontage)

DETERMINE WATTAGE ALLOWANCE				LUMINAIRE TYPE		DESIGN WATTS			
A	B	C	D	E	F	G	H	I	J
Specific Lighting Application	Linear Foot of Frontage	Sales Frontage Allowance for OLZ (Watts per LF)	Wattage Allowance (B X C)	Name or Symbol	Luminaire Type	Lumin QTY	Watts Per Luminaire	Design Watts (G X H)	Allowed Watts Minimum of D or I
Enter total into OLTG-1C; Page 4 of 4; Row B; Specific Application Lighting Wattage Allowance Per Unit Length									0

C. SPECIFIC APPLICATION WATTAGE ALLOWANCE FOR ORNAMENTAL LIGHTING

DETERMINE WATTAGE ALLOWANCE				LUMINAIRE TYPE		DESIGN WATTS			
A	B	C	D	E	F	G	H	I	J
Specific Lighting Application	Square feet of Hardscape	Ornamental Lighting Allowance for OLZ (Watts per ft²)	Wattage Allowance (B X C)	Name or Symbol	Luminaire Type	Lumin QTY	Watts Per Luminaire	Design Watts (G X H)	Allowed Watts Minimum of D or I
Enter total into OLTG-1C; Page 4 of 4; Row C; Specific Application Wattage for Ornamental Lighting									0

CERTIFICATE OF COMPLIANCE (Part 3 of 4) OLTG-1C

Project Name: LOS OSOS WATER RECYCLING FACILITY - ADMIN. BLDG.
Date: 5/9/2013

A. OUTDOOR LIGHTING ZONE

OUTDOOR LIGHTING ZONE: ☐ OLZ 1 ☐ OLZ 2 ☒ OLZ 3 ☐ OLZ 4

Is the Outdoor Lighting Zone: ☒ Default in accordance with §10-114, or ☐ Amended by JHA

Complete the information below if the default Outdoor Lighting Zone has been amended by the local jurisdiction having authority (JHA):

- ☐ The site is a government designated park, recreational area, wildlife preserve, or portion thereof, and has been designated as LZ2 or LZ3, in accordance with Table 10-114-A, because the site is contained within such a zone.
- ☐ The local jurisdiction having authority has officially adopted a change to the State Default Lighting Zone and has notified the Energy Commission by providing the materials required in § 10-114(d) to the Executive Director.
- ☐ The adopted change is posted on the Energy Commission website.

B. ADDITIONAL LIGHTING POWER ALLOWANCE FOR ORDINANCE REQUIREMENTS

Are additional lighting power allowances for ordinance in Table 147-C used? ☐ Yes ☒ No

Complete the information below if additional lighting power allowances for ordinance requirements are used:

- ☐ The local jurisdiction having authority has officially adopted specific outdoor light levels, which are expressed as average or minimum footcandle levels, by following a public process that allowed for formal public notification, review, and comment about the proposed change.
- ☐ The local jurisdiction having authority which adopted specific outdoor light levels and has notified the Commission by providing the following materials required §10-114(f) to the Executive Director.

C. ACCEPTANCE FORMS

Required Acceptance Tests

Designer:
This form is to be used by the designer and attached to the plans. Listed below is the acceptance test for the Lighting system, **OLTG-2A**. The designer is required to check the acceptance tests and list all control devices serving the building or space shall be certified as meeting the Acceptance Requirements for Code Compliance. If all the lighting system or control of a certain type requires a test, list the different lighting and the number of systems. The NA7 Section in the Appendix of the Nonresidential Reference Appendices Manual describes the test. Since this form will be part of the plans, completion of this section will allow the responsible party to budget for the scope of work appropriately. **Forms can be grouped by type of Luminaire controlled.**

Enforcement Agency:
Systems Acceptance: Before Occupancy Permit is granted for a newly constructed building or space or when ever new lighting system with controls is installed in the building or space shall be certified as meeting the Acceptance Requirements.
The **OLTG-2A** form is not considered a complete form and is not to be accepted by the enforcement agency unless the boxes are checked and/or filled and signed. In addition, a Certificate of Acceptance forms shall be submitted to the enforcement agency that certifies plans, specifications, installation certificates, and operating and maintenance information meet the requirements of §10-103(b) of Title 24 Part 6. The field inspector must receive the properly filled out and signed forms before the building can receive final occupancy. A copy of the **OLTG-2A** for each different lighting luminaire control(s) must be provided to the owner of the building for their records.

Certificate of Acceptance

	Luminaires Controlled			OLTG-2A[1]
Equipment Requiring Testing	Description	Qty. of Like Controls	Location	Outdoor Lighting Acceptance Tests
TIMECLOCK	-	-	-	

1. Insert: **OMS** for Outdoor Motion Sensor; **OLSC** for Outdoor Lighting Shutoff Controls; **OP** for Outdoor Photocontrol; **ATS** for Astronomical Time Switch; and, **STS** for Standard (non-astronomical) Time Switch acceptance.

CERTIFICATE OF COMPLIANCE (Part 1 of 4) OLTG-1C

Project Name: LOS OSOS WATER RECYCLING FACILITY - ADMIN. BLDG.
Date: 5/9/2013
Project Address: LOS OSOS, CA
Total Illuminated Area: 322

GENERAL INFORMATION

Phase of Construction: ☒ New Construction ☐ Addition ☐ Alteration

Documentation Author's Declaration Statement

I certify that this Certificate of Compliance documentation is accurate and complete.

Name	William Thoma	Signature	
Company	Thoma Electric, Inc	Date	5/9/2013
Address	3562 Empleo St.	CEA # / CEPE #	
City/State/Zip	San Luis Obispo, CA 93401	Phone	805-543-3850

Principal Lighting Designer's Declaration Statement

- I am eligible under Division 3 of the California Business and Professional Code to accept responsibility for the lighting design.
- This Certificate of Compliance identifies the lighting features and performance specifications required for compliance with Title 24, Pages 1 and 6 of the California Code of Regulations.
- The design features represented on this Certificate of Compliance are consistent with the information provided to document this design on the other applicable compliance forms, worksheets, calculations, plans and specifications submitted to the enforcement agency for approval with this building permit application.

Name	William Thoma	Signature	
Company	Thoma Electric Inc.	Phone	805-543-3850
Address	3562 Empleo St.	License #	10757
City/State/Zip	San Luis Obispo, CA 93401	Date	5/8/2013

Principal Lighting Designer's Declaration

☒ I certify that this Certificate of Compliance documentation is accurate and complete, and accounts for all outdoor lighting power, including building mounted, pole mounted, as well as all other lighting designed for the site, and that Additional Lighting Power Allowances for Specific Applications or Additional Lighting Power Allowances for Ordinance Requirements have not been counted more than one time for the same area, in accordance with Section 147 of the Standards.

Outdoor Lighting Mandatory Measures
Indicate location on building plans of Mandatory Measures Note Block: 05AE07

LIGHTING COMPLIANCE FORMS & WORKSHEETS (check box if worksheets is included)

For detailed instructions on the use of this and all Energy Efficiency Standards compliance forms, please refer to the Nonresidential Manual published by the California Energy Commission.

☒	OLTG-1C	Certificate of Compliance. All 4 pages required on plans for all submittals.
☒	OLTG-2C	(Pages 1 of 3) Lighting Wattage Allowances for General Hardscape, Sales Frontage, or Ornamental Lighting. Optional on plans.
☒	OLTG-2C	(Pages 2 of 3) Lighting Wattage Allowance for Per Application or Per Area. Optional on plans.
☐	OLTG-2C	(Pages 3 of 3) Additional Lighting Power Allowance for Ordinance Requirements. Optional on plans.

OUTDOOR LIGHTING WORKSHEET (Part 2 of 3) OLTG-2C

Project Name: LOS OSOS WATER RECYCLING FACILITY - ADMIN. BLDG.
Date: 5/9/2013

D. SPECIFIC APPLICATION LIGHTING WATTAGE ALLOWANCE PER APPLICATION

DETERMINE WATTAGE ALLOWANCE				DESIGN WATTS					ALLOWANCE
A	B	C	D	E	F	G	H	I	J
Specific Lighting Application	Number of Applications	Specific Application Allowance (watts)	Wattage Allowance (B X C)	Luminaire Symbol	Luminaire Type	Lumin QTY	Watts Per Luminaire	Design Watts (G X H)	Allowed Watts Minimum of D or I
BLDG. ENTRANCE	4	100	400	S2	31W LED DOWNLIGHT	2	31.0	62	124
				S	31W LED DOWNLIGHT	2	31.0	62	
Enter total into OLTG-1C; Page 4 of 4; Row D; Specific Application Wattage Allowance Per Application									124

E. SPECIFIC APPLICATION LIGHTING WATTAGE ALLOWANCE PER AREA

DETERMINE WATTAGE ALLOWANCE				LUMINAIRE TYPE		DESIGN WATTS			
A	B	C	D	E	F	G	H	I	J
Specific Lighting Application	Illuminated Area of Application	Specific Application Allowance (watts per ft²)	Wattage Allowance (B X C)	Code for Luminaire Type	Luminaire Type	Lumin QTY	Watts Per Luminaire	Design Watts (G X H)	Allowed Watts Minimum of D or I
Enter total into OLTG-1C; Page 4 of 4; Row E; Specific Application Lighting Wattage Allowance Per Area									0

CERTIFICATE OF COMPLIANCE (Part 4 of 4) OLTG-1C

Project Name: LOS OSOS WATER RECYCLING FACILITY - ADMIN. BLDG.
Date: 5/9/2013

ALLOWED AND INSTALLED OUTDOOR LIGHTING POWER

		Lighting Wattage Power Allowance	
A	Lighting power allowance for general hardscape (from OLTG-2C Page 1 of 3)	920	
B	Specific application lighting wattage allowance per unit length (from OLTG-2C Page 1 of 3)	0	
C	Specific application lighting wattage allowance for ornamental lighting (from OLTG-2C Page 1 of 3)	0	
D	Specific application lighting wattage allowance per application (from OLTG-2C Page 2 of 3)	124	
E	Specific application lighting wattage allowance per area (from OLTG-2C Page 2 of 3)	0	
F	Specific application lighting wattage allowance for ordinance requirements (from OLTG-2C Page 3 of 3)	0	
G	Total Allowed Wattage = Sum of rows A through F:	1,044	
H	Total installed watts (from Compliance Fixture Schedule, (from OLTG-2C Page 1 of 3)	186	
Complies if wattage in row H is less than or equal to the wattages in row G		☒ Yes	☐ No

CERTIFICATE OF COMPLIANCE (Part 2 of 4) OLTG-1C

Project Name: LOS OSOS WATER RECYCLING FACILITY - ADMIN. BLDG.
Date: 5/9/2013

COMPLIANCE FIXTURE / LIGHTING CONTROL SCHEDULE and FIELD INSPECTION CHECKLIST

INSTALLATION CERTIFICATE, OLTG-1INST (Retain a copy and verify form is completed and signed.) **Field Inspection** ☐

CERTIFICATE OF ACCEPTANCE, OLTG-2A (Retain a copy and verify form is completed and signed.) **Field Inspection** ☐

Luminaire Schedule						Installed Watts				
A	B	C	D	E	F	G	H	I		
Name or Item Tag	Luminaire Description[1] See footnote below (i.e.: 1 lamp pole-top shoe-box 400 watt metal halide)	Cutoff Designation	Watts per Luminaire	Special Features	How wattage was determined: Default from NA-8	How wattage was determined: According to Spec (D X E)	Number of Luminaires	Installed Watts (D X G)	Field Inspector[2] Pass	Field Inspector[2] Fail
S2	31W LED DOWNLIGHT		31.0	☐	☐	☒	2	62	☐	☐
S	31W LED DOWNLIGHT		31.0	☐	☐	☒	2	62	☐	☐
S1	31W LED DOWNLIGHT		31.0	☐	☐	☒	2	62	☐	☐
				☐	☐	☐			☐	☐
				☐	☐	☐			☐	☐
				☐	☐	☐			☐	☐
				☐	☐	☐			☐	☐
				☐	☐	☐			☐	☐
				☐	☐	☐			☐	☐
				☐	☐	☐			☐	☐
Enter total into OLTG-1C; Page 4 of 4: Row H; Total Installed Watts:								186		

1. Type of luminaire (i.e.: post top, wall pack, surface, shoe box); for non-incandescent luminaires, indicate nominal lamp wattage and lamp type (i.e.: fluorescent, incandescent, HID); ballast type (i.e.: electronic or magnetic); number of lamps; and number of ballasts per luminaire. For incandescent luminaires, the luminaire wattage listed in column D shall be the maximum relamping rated wattage on a permanent factory-installed label on the luminaire, NOT the wattage of the lamp (bulb) used, in accordance with Section 130(d) or e).
2. If Fail then describe on Page 2 of the Inspection Checklist Form and take appropriate action to correct. Verify building plans if necessary.

EXEMPT LUMINAIRES **Field Inspection** ☐

Name or Symbol	Description of exempt luminaires in accordance with §147

MANDATORY CONTROLS **Field Inspection** ☐

#	Description	Location	#	Description	Location

SPECIAL FEATURES INSPECTION CHECKLIST (See Page 2 of 4 of OLTG-1C)

The local enforcement agency should pay special attention to the items specified in this checklist. These items require special written justification and documentation, and special verification. The local enforcement agency determines the adequacy of the justification, and may reject a building or design that otherwise complies based on the adequacy of the special justification and documentation submitted.

Filed Inspector Notes or Discrepancies:

REV	DATE	BY	DESCRIPTION

DESIGNED RP
DRAWN DM
CHECKED JD
DATE SEPTEMBER 2013

REGISTERED PROFESSIONAL ENGINEER WILLIAM A. THOMA No. 10757 ELECTRICAL STATE OF CALIFORNIA
EXP. 06/30/15 REF. #13-8007

thoma ENGINEERING
THOMA ELECTRIC, INC.
P.O. Box 1167 – 3562 Empleo St.
San Luis Obispo, CA 93406
Phone: (805) 543-3850
Fax: (805) 543-3829
cad@thomaelec.com

carollo

SAN LUIS OBISPO COUNTY

SAN LUIS OBISPO COUNTY
LOS OSOS WATER RECYCLING FACILITY PROJECT
ELECTRICAL
ADMINISTRATION BUILDING
EXTERIOR TITLE 24 COMPLIANCE FORMS

VERIFY SCALES
BAR IS ONE INCH ON ORIGINAL DRAWING
0 1"
IF NOT ONE INCH ON THIS SHEET, ADJUST SCALES ACCORDINGLY

JOB NO. 8930A.11
DRAWING NO. 05AE08
SHEET NO. OF XX

K:\DWGS\13-8007\13-8007_05AE08.dwg – lynda – Sep 10, 2013 – 3:49pm

NOTE:
RENDERINGS ON THIS SHEET ARE AN ARTISTIC REPRESENTATION OF THE BUILDING, AND ARE PROVIDED FOR REFERENCE ONLY.

REV	DATE	BY	DESCRIPTION

DESIGNED KH
DRAWN IW
CHECKED FFG
DATE SEPTEMBER 2013

LICENSED ARCHITECT STEVEN D. PULTS NO. 8611 EXP. 06-30-15 STATE OF CALIFORNIA

PULTS Steven D. Pults, AIA & Associates, LLP

carollo

SAN LUIS OBISPO COUNTY

SAN LUIS OBISPO COUNTY

LOS OSOS WATER RECYCLING FACILITY PROJECT

ARCHITECTURAL
MAINTENANCE BUILDING
RENDERING

VERIFY SCALES
BAR IS ONE INCH ON ORIGINAL DRAWING
0 1"
IF NOT ONE INCH ON THIS SHEET, ADJUST SCALES ACCORDINGLY

JOB NO. 8930A.11
DRAWING NO. 06AA00
SHEET NO. XXX OF XXX

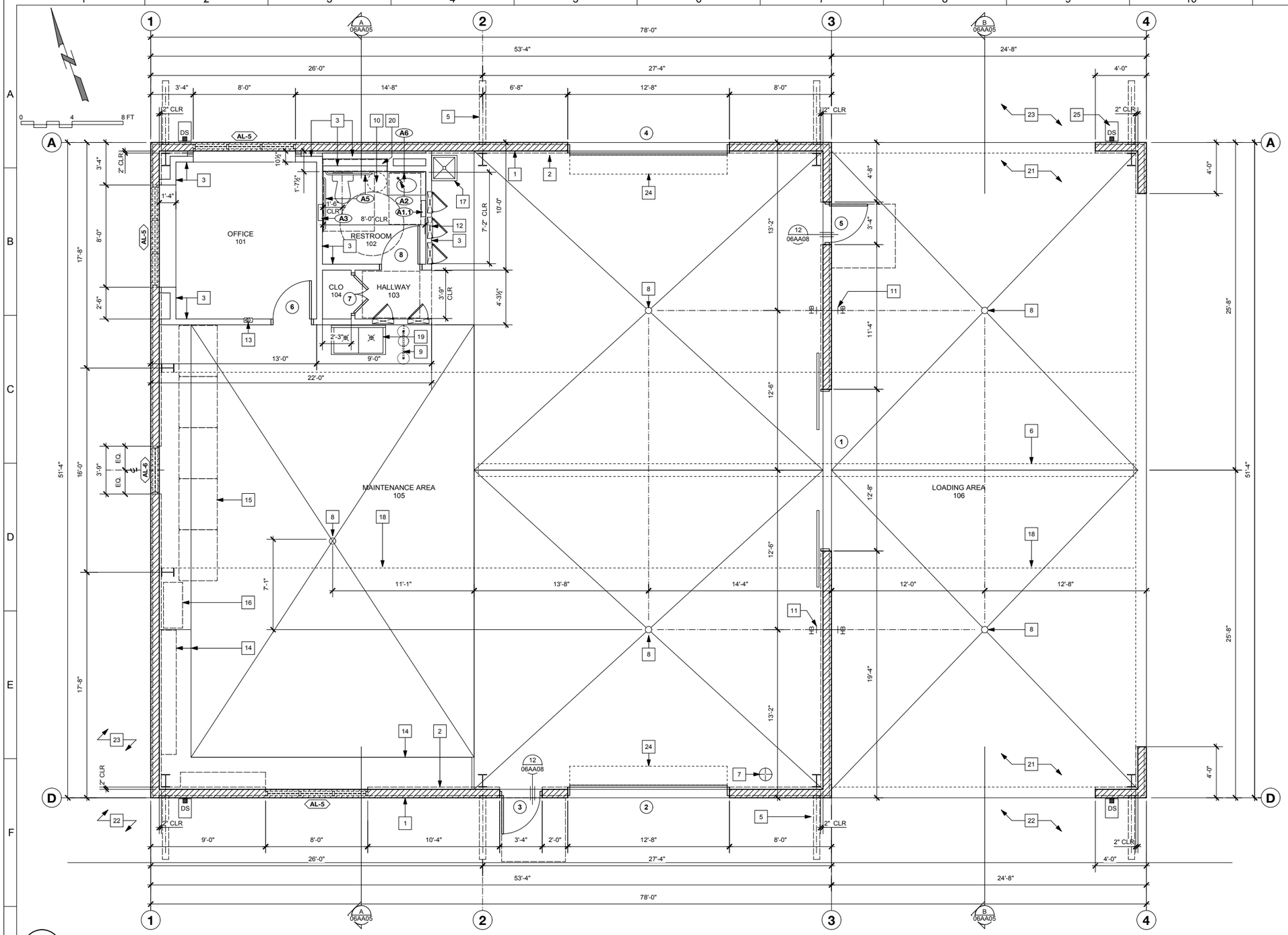

FLOOR PLAN GENERAL NOTES

1. It is the responsibility of the General Contractor to verify all existing conditions prior to constructi Any discrepancies shall be brought to the attention of the Architect.
2. Contractor shall provide a portable 2A10BC fire extinguisher on site during construction.
3. All plumbing walls & walls with recessed accessories shall be 2X6 wood stud with R-19 batt insulation, U.N.O.
4. All interior walls shall have R-19 batt insulation in walls.
5. Fire extinguishers shall be 2A10BC in cabinet (Larsen's; Vertical DuoStainless Steel w/ Lock or equal). Mount at +48" to centerline of valve handle. Refer to detail 3, sheet 05AA11
6. See Sheet 05AA09 for Door Schedule.
7. See Sheet 05AA09 for Window Schedule.

FLOOR PLAN REFERENCE NOTES

1. 8" CMU WALL @ +48" AFF
2. 8" METAL BUILDING WALL ABOVE CMU WALL, SHOWN DASHED
3. 2X6 WOOD STUD WALL
4. 2X4 WOOD STUD WALL
5. LINE OF ROOF KICKER ABOVE
6. HOIST BEAM, BOTTOM @ +11' - 0" AFF. REFER TO MTL BLDG DRAWINGS
7. FIRE SPRINKLER RISER, REFER TO PLUMBING DRAWINGS
8. FLOOR DRAIN, REFER TO PLUMBING DRAWINGS
9. EMERGENCY EYEWASH STATION, REFER TO PLUMBING DRAWINGS
10. WATER HEATER ABOVE
11. NON-POTABLE WATER HOSE BIB. REFER TO PLUMBING DRAWINGS
12. ELECTRICAL PANEL, REFER TO ELECTRICAL DRAWINGS
13. FIRE EXTINGUISHER, REFER TO GENERAL NOTES
14. CABINETRY, REFER TO CABINET ELEVATIONS SHT 06AA05
15. METAL SHELVING (N.I.C.)
16. METAL CABINET (N.I.C.)
17. MOP SINK, REFER TO PLUMBING DRAWINGS
18. LINE OF CEILING ABOVE
19. SINK, REFER TO PLUMBING DRAWINGS
20. 5'-0"w x 42"h x 12"d CABINET, SET IN WALL, SHOWN DASHED
21. CONCRETE PAD, SEE STRUCTURAL DRAWINGS
22. CONCRETE WALKWAY, SEE CIVIL DRAWINGS
23. ASPHALT PAVING, SEE CIVIL DRAWINGS
24. OVERHEAD COILING DOOR
25. PRECAST CONCRETE SPLASH BLOCK

BUILDING DATA

BUILDING AREA:	2,737 SF (INTERIOR) 1,266 SF (COVERED EXTERIOR) 4,003 (TOTAL)
CONSTRUCTION TYPE:	V-B SPRINKLERED
TRUE BLDG HEIGHT LIMIT:	+35'-0"
OCCUPANCY:	F-1

ACCESSORY SCHEDULE

MARK	DESCRIPTION	MODEL
A1	RECESSED PAPER TOWEL DISPENSER/WASTE BIN	B-3944
A1.1	SURFACE MOUNT PAPER TOWEL DISPENSER/WASTE BIN	B-3699
A2	COUNTER MOUNT SOAP DISPENSER	B-822
A3	COMBINATION RECESSED TOILET SEATCOVER DISPENSER, SANITARY NAPKIN DISPOSAL AND TOILET TISSUE DISPENSER	B-3574
A4	COMBINATION RECESSED TOILET SEATCOVER DISPENSER AND TOILET TISSUE DISPENSER	B-3474
A5	GRAB BAR	B-6806.99
A6	MIRROR, FULL HT FROM BOT OF SOFFIT TO TOP OF SPLASH X FULL WIDTH OF COUNTER	
A7	SURFACE MOUNT COAT HOOK	B-6827

NOTE: ALL ACCESSORIES ARE BOBRICK OR EQUAL
FOR MOUNTING HEIGHTS SEE SHEET 05AA11

1 **FLOOR PLAN**
SCALE: 1/4" = 1' - 0"

REV	DATE	BY	DESCRIPTION

DESIGNED KH
DRAWN IW
CHECKED FFG
DATE SEPTEMBER 2013

LICENSED ARCHITECT STEVEN D. PULTS No. 8611 REN. 06-30-15 STATE OF CALIFORNIA

PULTS Steven D. Pults, AIA & Associates, LLP

carollo

SAN LUIS OBISPO COUNTY

SAN LUIS OBISPO COUNTY
LOS OSOS WATER RECYCLING FACILITY PROJECT
ARCHITECTURAL
MAINTENANCE BUILDING
FLOOR PLAN

VERIFY SCALES
BAR IS ONE INCH ON ORIGINAL DRAWING
0 1"
IF NOT ONE INCH ON THIS SHEET, ADJUST SCALES ACCORDINGLY

JOB NO. 8930A.11
DRAWING NO. 06AA01
SHEET NO. XXX OF XXX

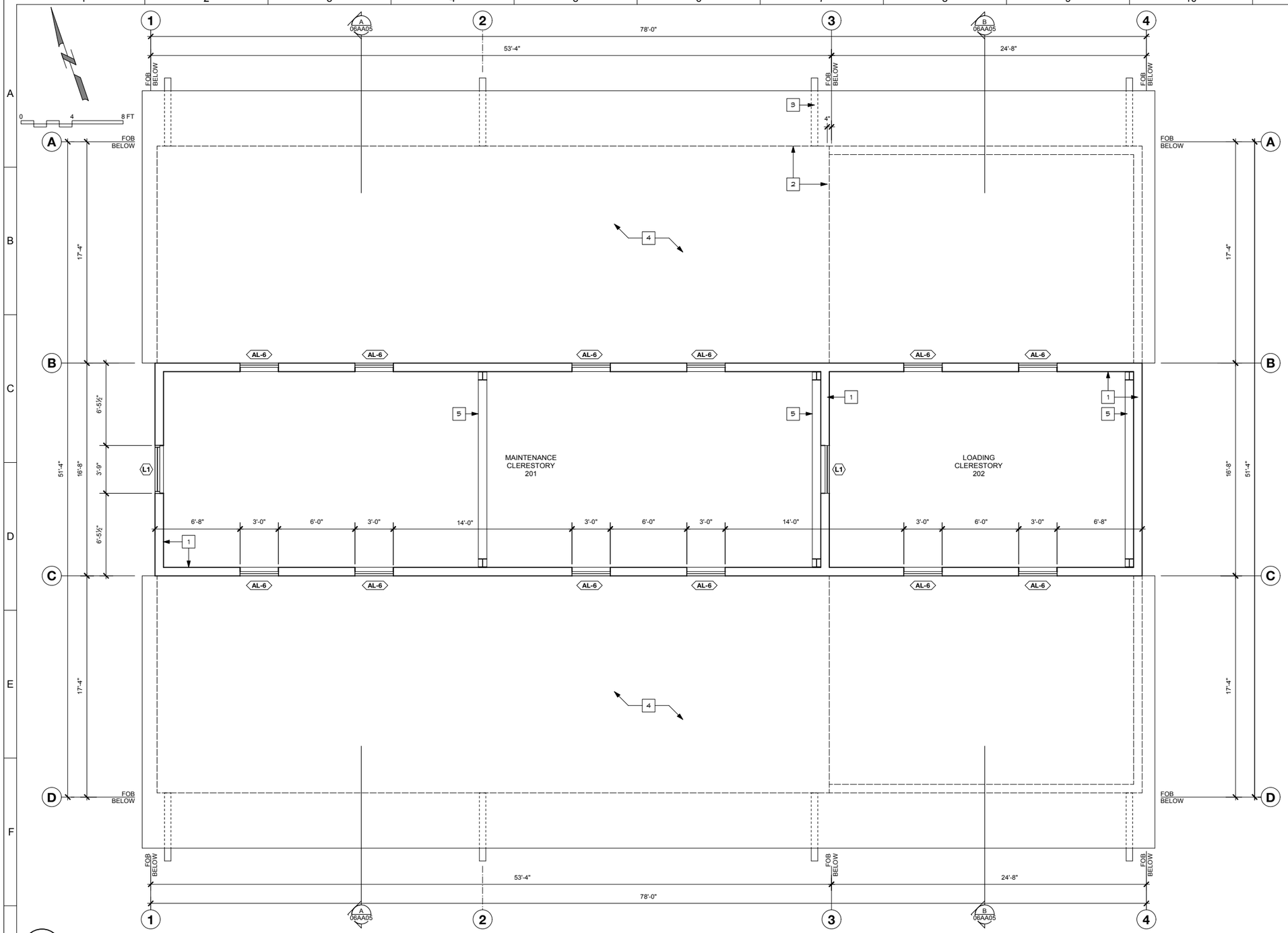

CLERESTORY PLAN

SCALE: 1/4" = 1' - 0"

FLOOR PLAN GENERAL NOTES

1. See Sheet 05AA09 for Window & Louver Schedule.

CLERESTORY REFERENCE NOTES

1. 8" STEEL FRAMED BUILDING WALL
2. BUILDING WALL BELOW, SHOWN DASHED
3. METAL OUTRIGGER BELOW, SHOWN DASHED
4. METAL ROOF BELOW
5. METAL BUILDING MAIN FRAME

REV	DATE	BY	DESCRIPTION

DESIGNED KH
DRAWN IW
CHECKED FFG
DATE SEPTEMBER 2013

LICENSED ARCHITECT STEVEN D. PULTS NO. 8611 REN. 06-30-15 STATE OF CALIFORNIA

PULTS Steven D. Pults, AIA & Associates, LLP

carollo

SAN LUIS OBISPO COUNTY

SAN LUIS OBISPO COUNTY

LOS OSOS WATER RECYCLING FACILITY PROJECT

ARCHITECTURAL
MAINTENANCE BUILDING
CLERESTORY PLAN

VERIFY SCALES
BAR IS ONE INCH ON ORIGINAL DRAWING
0 1"
IF NOT ONE INCH ON THIS SHEET, ADJUST SCALES ACCORDINGLY

JOB NO. 8930A.11
DRAWING NO. 06AA02
SHEET NO. XXX OF XXX

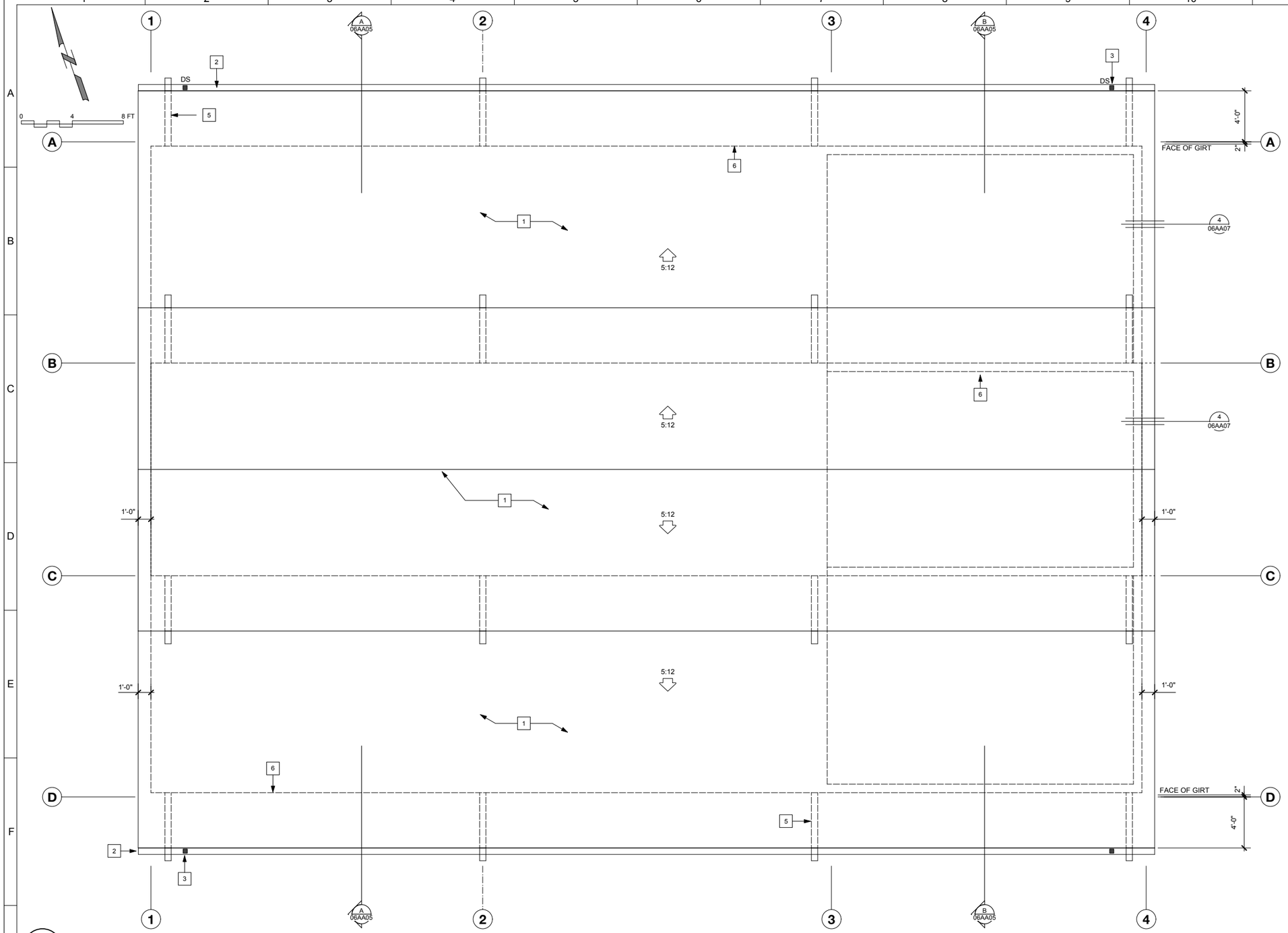

ROOF NOTES

1. **METAL ROOFING**
   24ga 16" flat-pan, vertical standing seam, metal roof panel. Roof shall be installed with applied lap sealant per roof manuf requirements. Roof material shall be Metal Sales or equal
   Corrosion protection shall be G90 per ASTM A 653 All fasteners shall be galvanized.
   COLOR: Weathered Copper or equivalent

2. **FLASHING**
   All flashing shall be galvanized sheet metal conforming to ASTM B370.
   min gauge: coping = 20 oz
   base = 16 oz
   counter = 16 oz
   valley = 16 oz

3. **GUTTERS & DOWNSPOUTS**
   galvanized, painted gutters, 6"ø, 20 oz, shape per SMACNA Fig 1-3A.
   COLOR: Weathed Copper or equivalent
   Aluminum downspouts, 3" Ø, 06 oz, shape per SMACNA Fig 1-32A.
   Provide wire mesh screens over gutters to prevent accumulation of debris in gutters.

ROOF REFERENCE NOTES

1. METAL ROOFING
2. 6" WIDE GUTTER
3. DOWNSPOUT
4. NOT USED
5. LINE OF OUTRIGGER BELOW
6. LINE OF BUILDING BELOW

1 ROOF PLAN

SCALE: 1/4" = 1' - 0"

REV	DATE	BY	DESCRIPTION

DESIGNED KH
DRAWN IW
CHECKED FFG
DATE SEPTEMBER 2013

LICENSED ARCHITECT STEVEN D. PULTS No. 8617 REN. 06-30-15 STATE OF CALIFORNIA

PULTS Steven D. Pults, AIA & Associates, LLP

carollo

SAN LUIS OBISPO COUNTY

SAN LUIS OBISPO COUNTY
LOS OSOS WATER RECYCLING FACILITY PROJECT
ARCHITECTURAL
MAINTENANCE BUILDING
ROOF PLAN

VERIFY SCALES
BAR IS ONE INCH ON ORIGINAL DRAWING
0 1"
IF NOT ONE INCH ON THIS SHEET, ADJUST SCALES ACCORDINGLY

JOB NO. 8930A.11
DRAWING NO. 06AA03
SHEET NO. XXX OF XXX

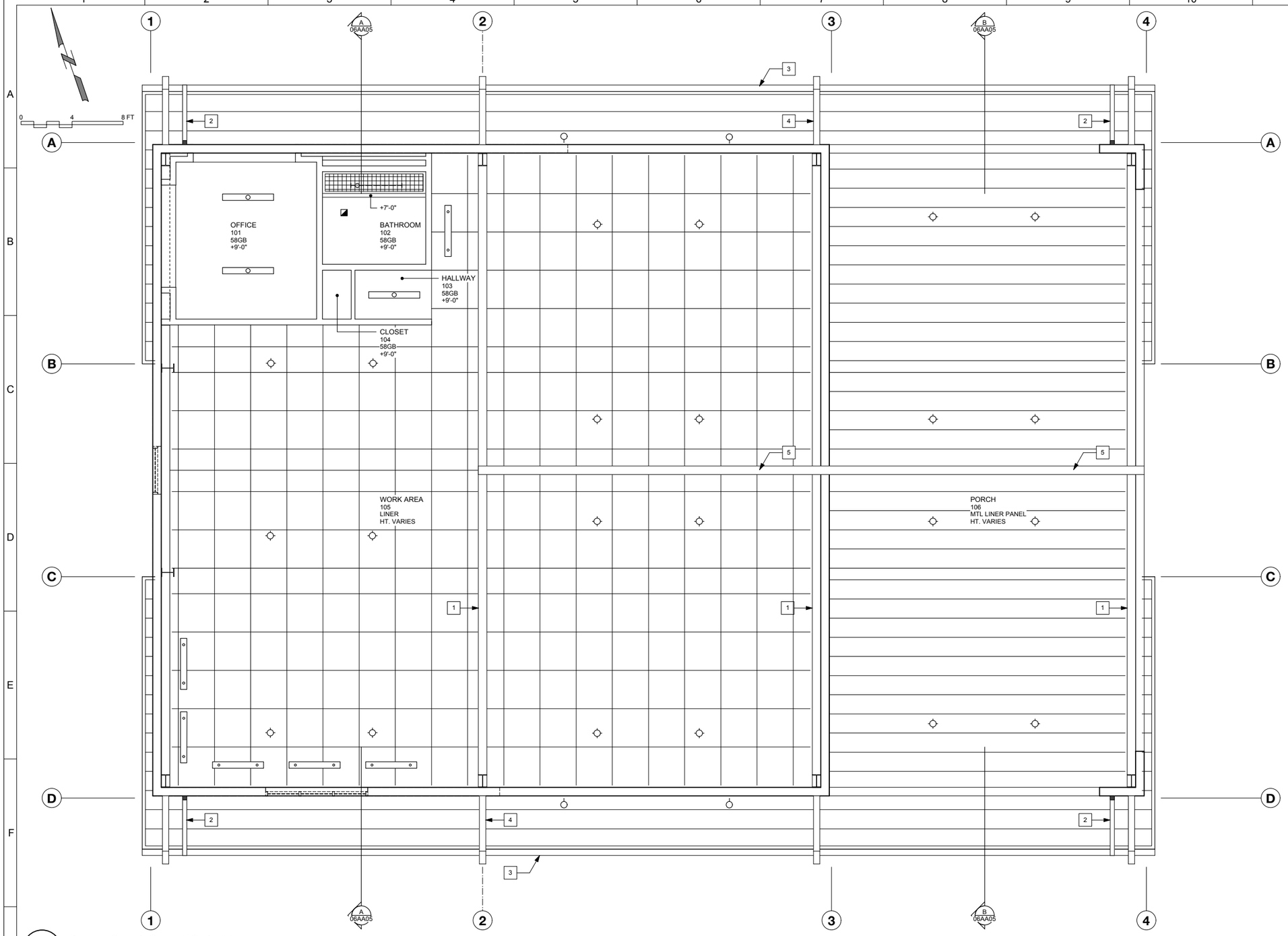

LEGEND

- SURFACE-MOUNTED STRIP LED FIXTURE
- SUSPENDED LED STRIP FIXTURE
- SUSPENDED LED FIXTURE
- WALL MOUNTED LED FIXTURE (REFER TO EXT ELEV FOR MOUNTING HT)
- EXHAUST FAN

CEILING PLAN REFERENCE NOTES

1. METAL BUILDING MAIN FRAME
2. DOWNSPOUT
3. GUTTER
4. OUTRIGGER
5. HOIST BEAM

1 REFLECTED CEILING PLAN

SCALE: 1/4" = 1' - 0"

REV	DATE	BY	DESCRIPTION

DESIGNED KH
DRAWN IW
CHECKED FFG
DATE SEPTEMBER 2013

LICENSED ARCHITECT STEVEN D. PULTS No. 8611 REN. 06-30-15 STATE OF CALIFORNIA

PULTS Steven D. Pults, AIA & Associates, LLP

carollo

SAN LUIS OBISPO COUNTY

SAN LUIS OBISPO COUNTY

LOS OSOS WATER RECYCLING FACILITY PROJECT

ARCHITECTURAL
MAINTENANCE BUILDING
REFLECTED CEILING PLAN

VERIFY SCALES
BAR IS ONE INCH ON ORIGINAL DRAWING
0 1"
IF NOT ONE INCH ON THIS SHEET, ADJUST SCALES ACCORDINGLY

JOB NO. 8930A.11
DRAWING NO. 06AA04
SHEET NO. XXX OF XXX

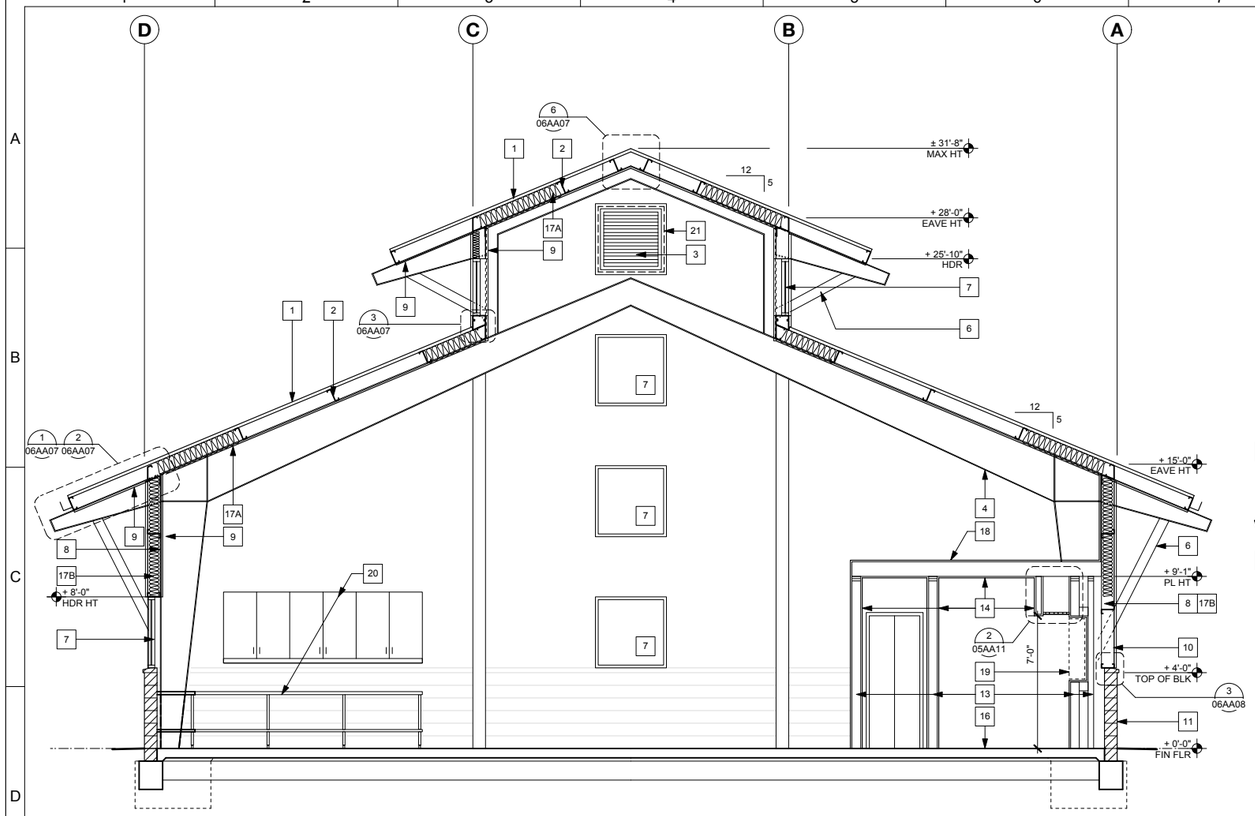

1 SECTION A

SCALE: 1/4" = 1' - 0"
FILE:

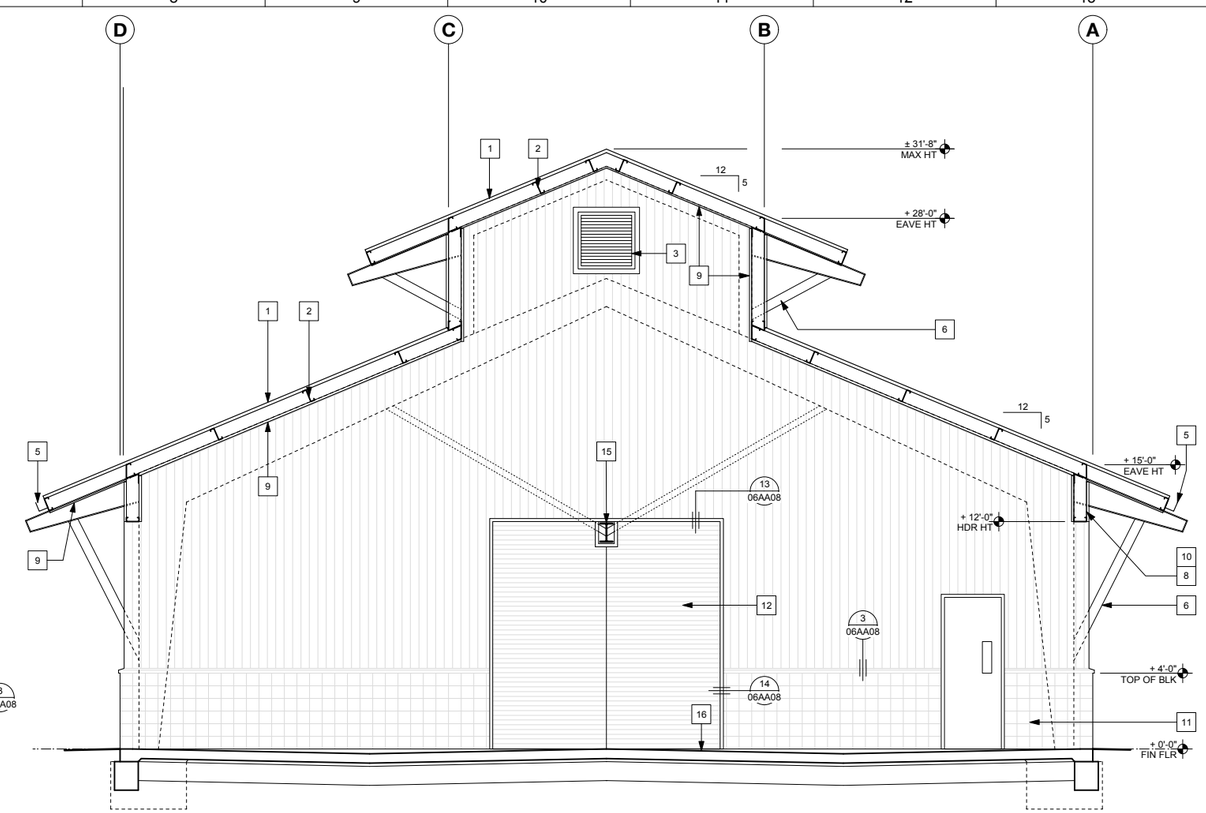

2 SECTION B

SCALE: 1/4" = 1' - 0"
FILE:

CABINET NOTES

1. Field verify all necessary dimensions prior to fabrication.
2. All cabinet construction shall conform to W.I.C. Custom Grade.
3. All countertops shall have a back, U.N.O.
4. All open shelves shall be galvanized steel.
5. Upper cabinets shall have two rows of adjustable shelves and hinged doors, U.N.O.
6. All hinges shall be fully concealed.
7. Contractor shall submit shop drawings for all counters & cabinet work for approval prior to fabrication. Submit to Architect.

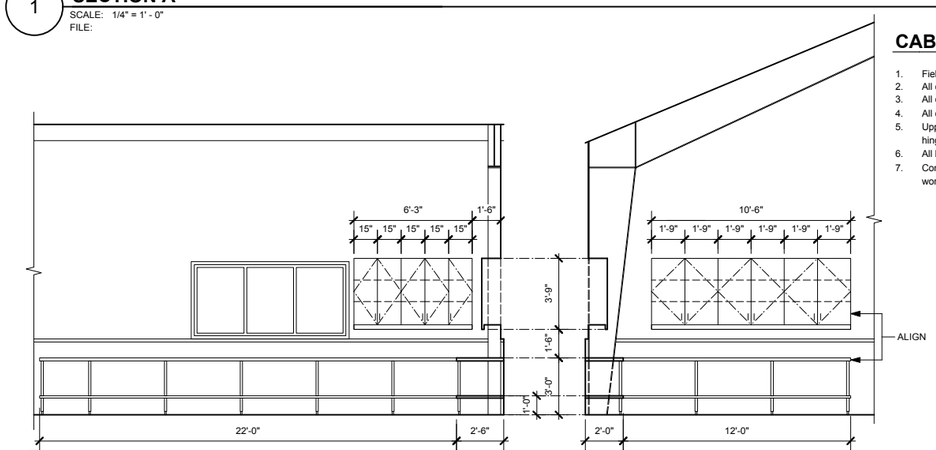

3 CABINET ELEVATIONS • MAINTENANCE BUILDING

SCALE: 1/4" = 1' - 0"
FILE:

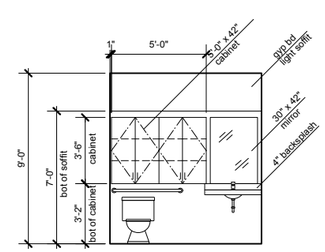

4 INTERIOR ELEVATION @ BATHROOM

SCALE: 1/4" = 1' - 0"
FILE:

BUILDING SECTION REFERENCE NOTES

1. METAL ROOFING
2. METAL PURLIN
3. METAL LOUVER
4. METAL BUILDING FRAME
5. GUTTER
6. METAL OUTRIGGER
7. ALUMINUM STOREFRONT WINDOW
8. METAL GIRT WALL
9. STEEL LINER PANEL. METALSALES T1 WALL PANEL OR EQUAL. COLOR: LINEN WHITE
10. METAL SIDING. METALSALES T12 WALL OR EQUAL. COLOR: KHAKI
11. GROUND FACE SCORED CONCRETE BLOCK WALL TO 48" A.F.F.
12. SLIDING DOOR
13. WOOD STUD FRAMING
14. 5/8" GYPSUM BOARD
15. HOIST BEAM
16. CONCRETE SLAB
17. INSULATION
    A: THERMAL DESIGN "SIIMPLE SAVER" INSULATION SYSTEM FOR PRE-ENGINEERED METAL BUILDINGS W/ R-30 DOUBLE LAYER INSULATION AND VAPOR BARRIER/LINER
    B: R-19 TYP. @ WALLS
18. 3/4" PLYWOOD, SEE STRUCTURAL DRAWINGS
19. 12" DEEP CABINET RECESSED IN WALL, SEE BATHROOM INTERIOR ELEVATION
20. METAL CABINETS, SEE CABINET ELEVATIONS
21. EXHAUST FAN, SEE BLDG 06 MECHANICAL DRAWINGS

REV	DATE	BY	DESCRIPTION

DESIGNED KH
DRAWN IW
CHECKED FFG
DATE SEPTEMBER 2013

LICENSED ARCHITECT STEVEN D. PULTS No. 8611 REN. 06-30-15 STATE OF CALIFORNIA

PULTS Steven D. Pults, AIA & Associates, LLP

carollo

COUNTY OF SAN LUIS OBISPO CALIFORNIA

SAN LUIS OBISPO COUNTY

SAN LUIS OBISPO COUNTY

LOS OSOS WATER RECYCLING FACILITY PROJECT

ARCHITECTURAL
MAINTENANCE BUILDING
BUILDING SECTIONS

VERIFY SCALES
BAR IS ONE INCH ON ORIGINAL DRAWING
0 1"
IF NOT ONE INCH ON THIS SHEET, ADJUST SCALES ACCORDINGLY

JOB NO. 8930A.11
DRAWING NO. 06AA05
SHEET NO. XXX OF XXX

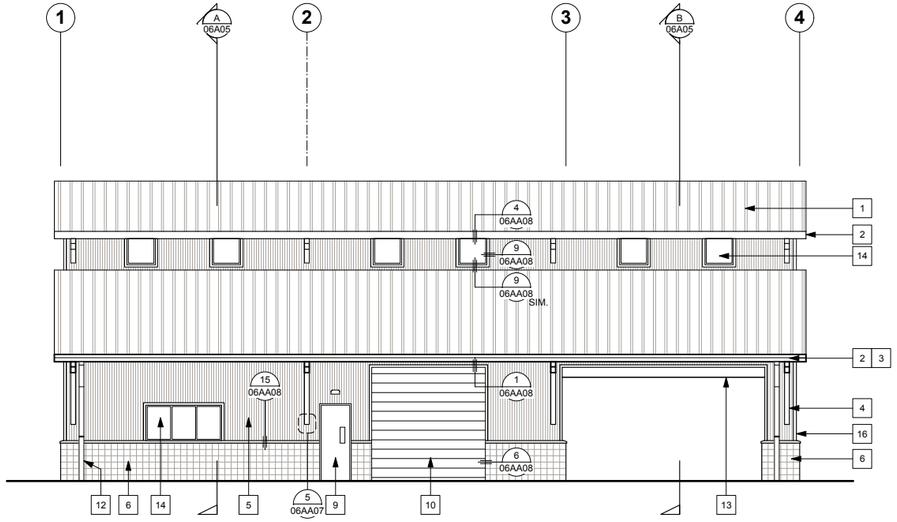

1 EXTERIOR ELEVATION - SOUTH

SCALE: 1/8" = 1' - 0"
FILE:

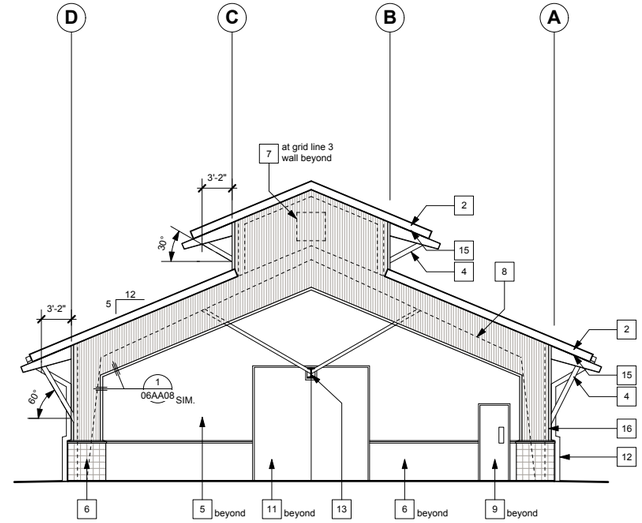

2 EXTERIOR ELEVATION - EAST

SCALE: 1/8" = 1' - 0"
FILE:

BUILDING ELEVATION REFERENCE NOTES

1. STANDING SEAM METAL ROOFING, (METAL SALES VERTICAL SEAM, COLOR: WEATHERED COPPER OR EQUAL)
2. METAL TRIM, (COLOR TO MATCH ROOFING)
3. GUTTER, (COLOR TO MATCH ROOFING)
4. METAL OUTRIGGER, (METAL SALES LINEN WHITE COLOR OR EQUAL)
5. METAL SIDING, (METAL SALES T12 PROFILE, KHAKI COLOR OR EQUAL)
6. SCORED GROUND FACE CONCRETE BLOCK WAINSCOT, (COLOR: CHARCOAL) WATER-REPELANT COATING ON EXPOSED SIDES PER SPECIFICATION
7. METAL LOUVERED VENT, (LINEN WHITE COLOR) REFER TO MECHANICAL SHEETS FOR ADDITIONAL INFORMATION
8. PEMB STEEL FRAME BEYOND, SHOWN DASHED, (METAL SALES LINEN WHITE COLOR OR EQUAL)
9. HOLLOW METAL WALK DOOR, (LINEN WHITE COLOR)
10. METAL ROLL-UP DOOR, (LINEN WHITE COLOR)
11. METAL BARN DOOR, HORIZONTAL SIDING, (LINEN WHITE COLOR)
12. DOWNSPOUT, COLOR TO MATCH METAL SIDING
13. STEEL HOIST BEAM, REFER TO STRUCTURAL FOR ADDITIONAL INFORMATION, (LINEN WHITE)
14. ALUMINUM STOREFRONT WINDOW. (LINEN WHITE COLOR)
15. METAL SOFFIT PANEL, (METAL SALES T1 PROFILE OR EQUAL, (LINEN WHITE COLOR)
16. CORNER TRIM, (COLOR TO MATCH SIDING)
17. LIGHT FIXTURE, REFER TO ELECTRICAL SHEETS

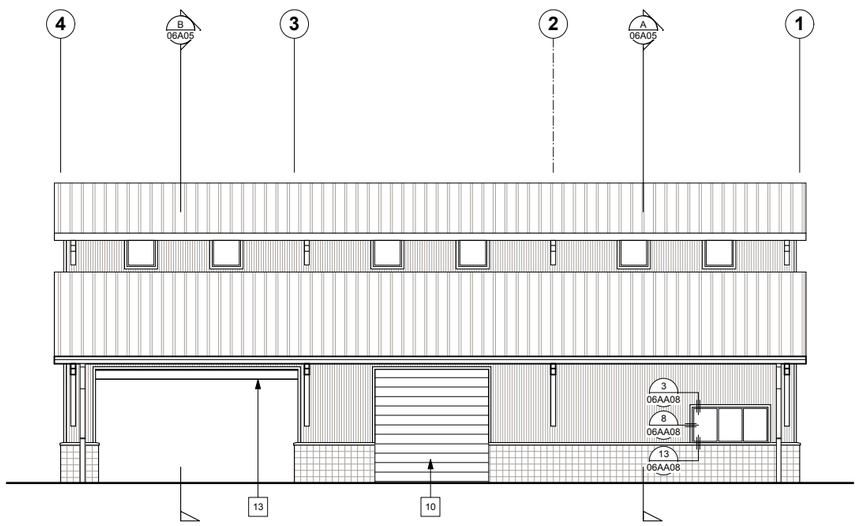

3 EXTERIOR ELEVATION - NORTH

SCALE: 1/8" = 1' - 0"
FILE:

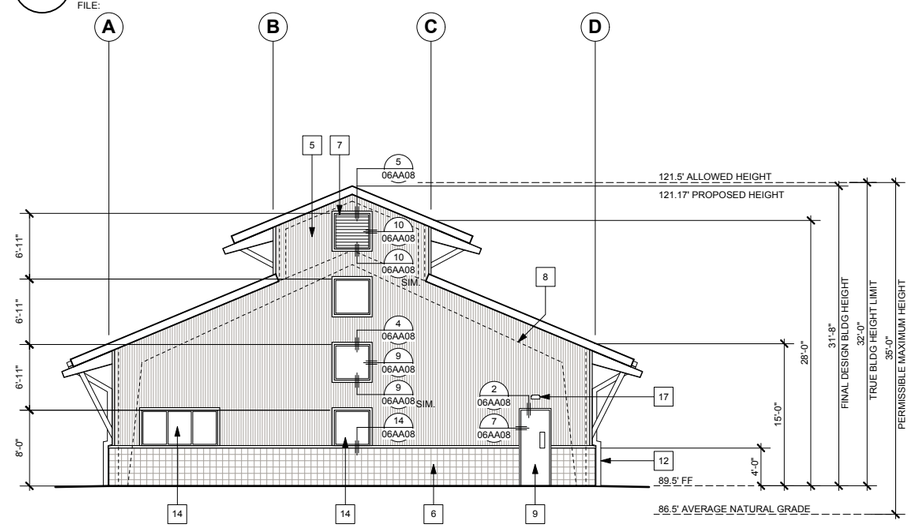

4 EXTERIOR ELEVATION - WEST

SCALE: 1/8" = 1' - 0"
FILE:

REV	DATE	BY	DESCRIPTION

DESIGNED KH
DRAWN IW
CHECKED FFG
DATE SEPTEMBER 2013

LICENSED ARCHITECT STEVEN D. PULTS No. 8611 REN. 06-30-15 STATE OF CALIFORNIA

PULTS Steven D. Pults, AIA & Associates, LLP

carollo

SAN LUIS OBISPO COUNTY

SAN LUIS OBISPO COUNTY
LOS OSOS WATER RECYCLING FACILITY PROJECT
ARCHITECTURAL
MAINTENANCE BUILDING
EXTERIOR ELEVATIONS

VERIFY SCALES
BAR IS ONE INCH ON ORIGINAL DRAWING
0 1"
IF NOT ONE INCH ON THIS SHEET, ADJUST SCALES ACCORDINGLY

JOB NO. 8930A.11
DRAWING NO. 06AA06
SHEET NO. XXX OF XXX

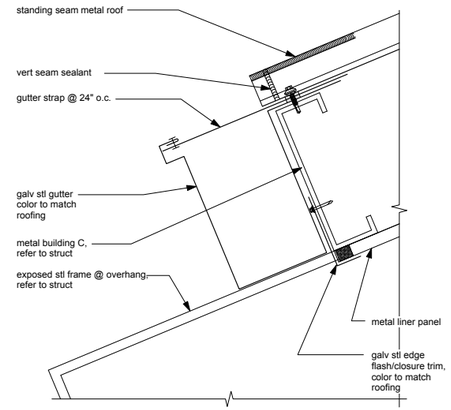

1 **EAVE**
SCALE: 3" = 1' - 0"

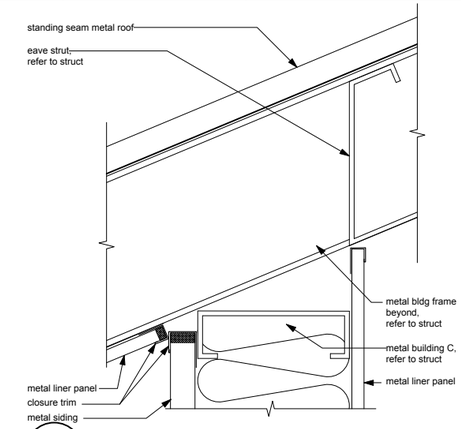

2 **EAVE @ WALL**
SCALE: 3" = 1' - 0"

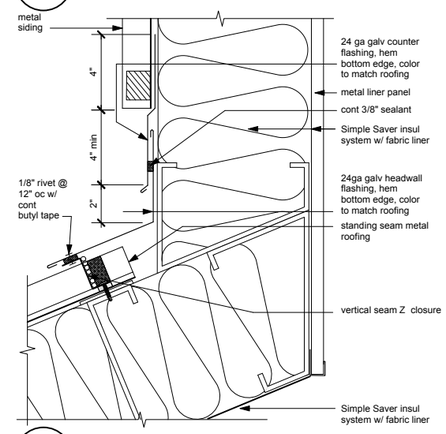

3 **HEADWALL**
SCALE: 3" = 1' - 0"

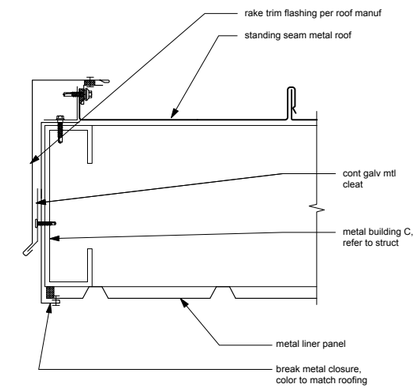

4 **RAKE**
SCALE: 3" = 1' - 0"

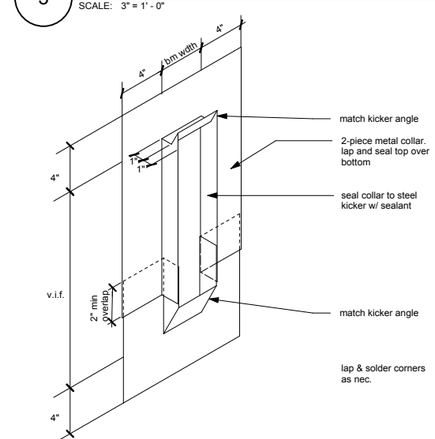

5 **KICKER FLASHING COLLAR**
SCALE: N.T.S.

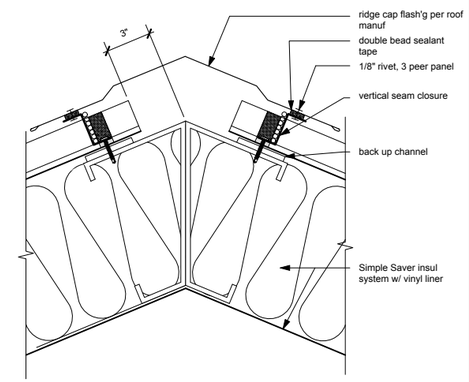

6 **RIDGE**
SCALE: 3" = 1' - 0"

REV	DATE	BY	DESCRIPTION

DESIGNED KH
DRAWN IW
CHECKED FFG
DATE SEPTEMBER 2013

LICENSED ARCHITECT STEVEN D. PULTS No. 8611 REN. 06-30-15 STATE OF CALIFORNIA

PULTS Steven D. Pults, AIA & Associates, LLP

carollo

SAN LUIS OBISPO COUNTY

SAN LUIS OBISPO COUNTY
LOS OSOS WATER RECYCLING FACILITY PROJECT
ARCHITECTURAL
MAINTENANCE BUILDING
ROOF DETAILS

VERIFY SCALES
BAR IS ONE INCH ON ORIGINAL DRAWING
0 1"
IF NOT ONE INCH ON THIS SHEET, ADJUST SCALES ACCORDINGLY

JOB NO. 8930A.11
DRAWING NO. 06AA07
SHEET NO. XXX OF XXX

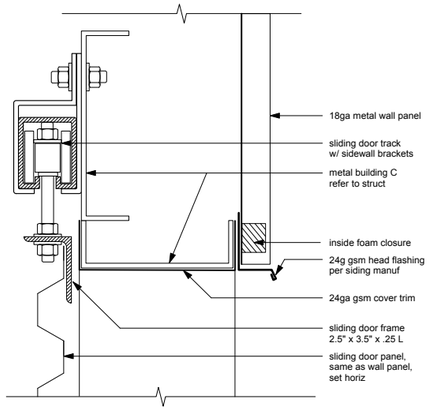

1 **BARN DOOR HEAD (COIL. DOOR, SIM.)**
SCALE: 3" = 1' - 0"

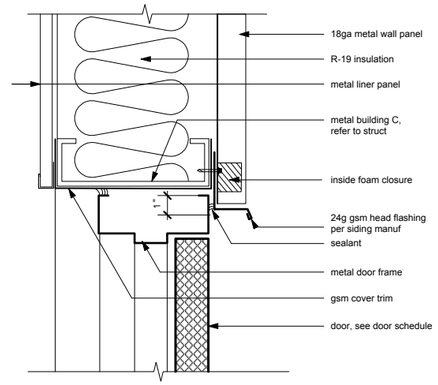

2 **EXT DOOR HEAD**
SCALE: 3" = 1' - 0"

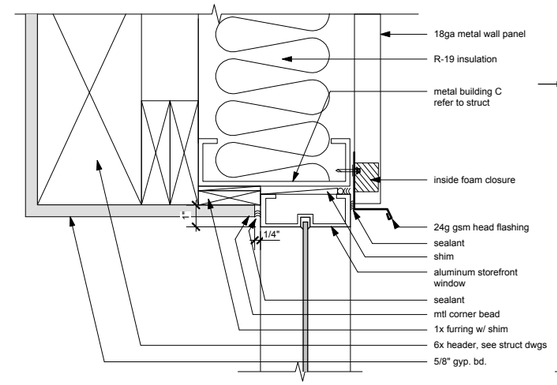

3 **WINDOW HEAD @ INT WALL**
SCALE: 3" = 1' - 0"

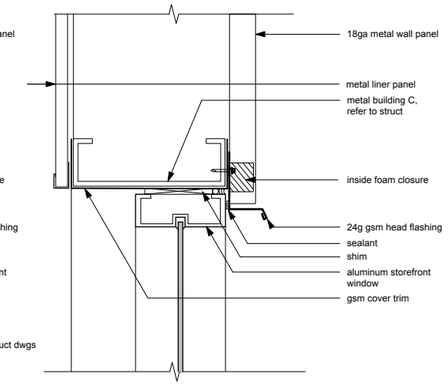

4 **WINDOW HEAD**
SCALE: 3" = 1' - 0"

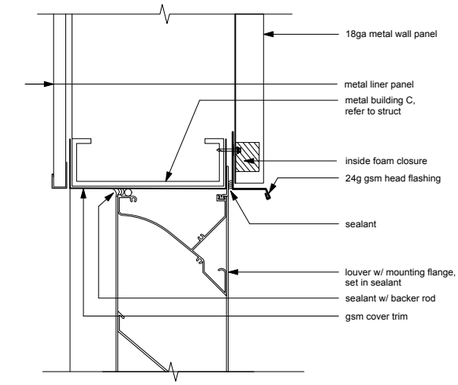

5 **LOUVER HEAD**
SCALE: 3" = 1' - 0"

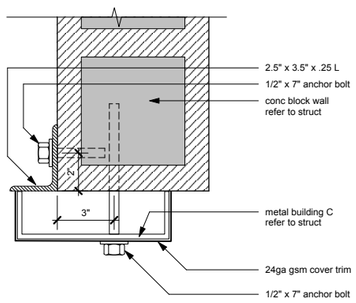

6 **BARN DOOR JAMB (COIL. DOOR, SIM.)**
SCALE: 3" = 1' - 0"

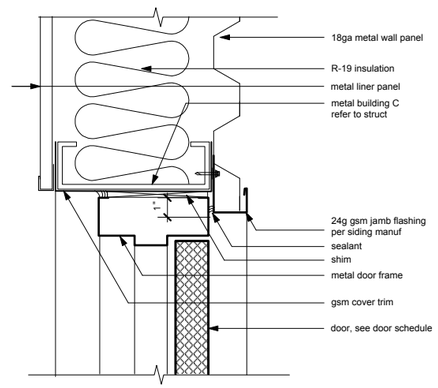

7 **EXT DOOR JAMB**
SCALE: 3" = 1' - 0"

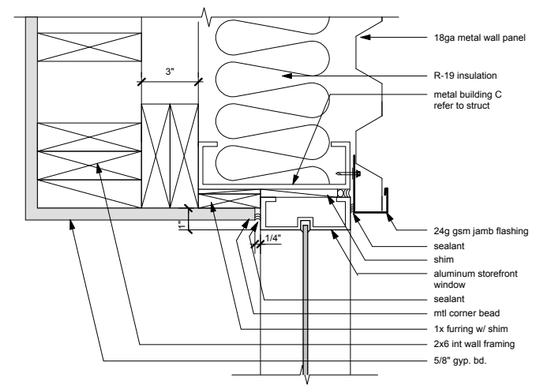

8 **WINDOW JAMB @ INT WALL**
SCALE: 3" = 1' - 0"

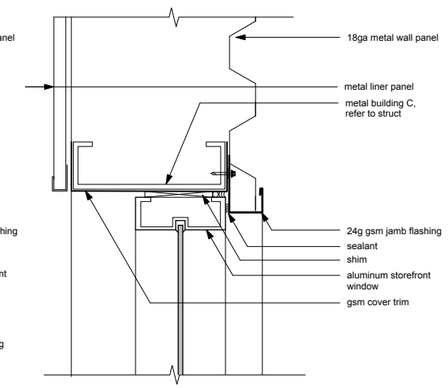

9 **WINDOW JAMB**
SCALE: 3" = 1' - 0"

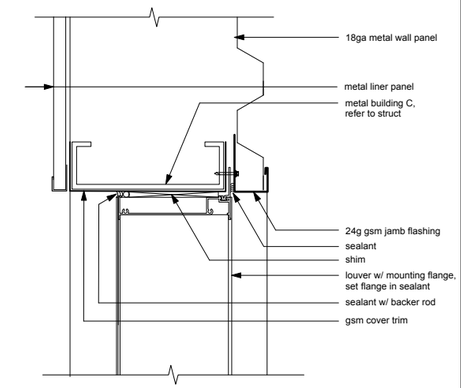

10 **LOUVER JAMB (SILL SIM.)**
SCALE: 3" = 1' - 0"

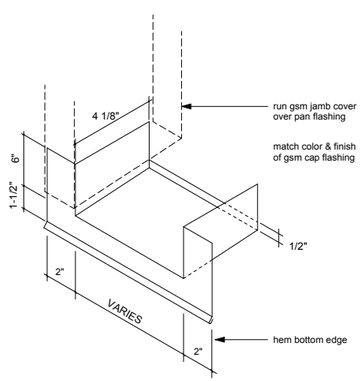

11 **GSM PAN FLASHING**
SCALE: 3" = 1' - 0"

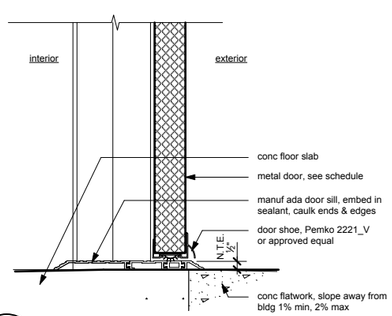

12 **EXT DOOR SILL**
SCALE: 3" = 1' - 0"

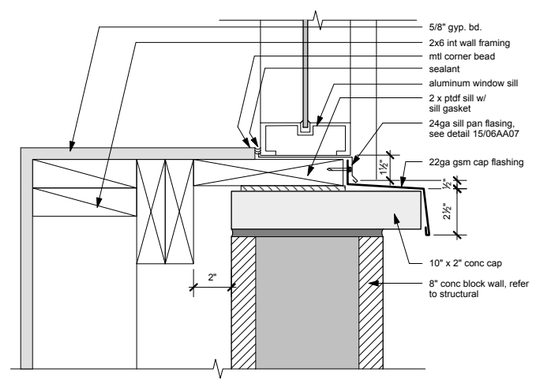

13 **WINDOW SILL @ INT WALL**
SCALE: 3" = 1' - 0"

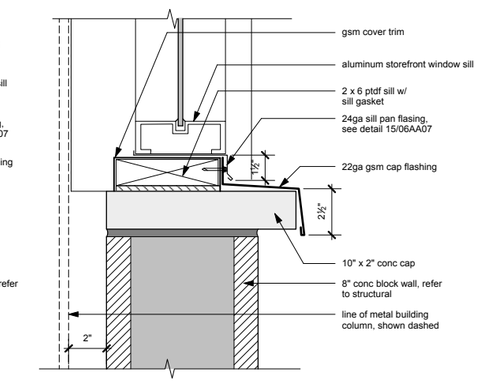

14 **WINDOW SILL @ WAINSCOT**
SCALE: 3" = 1' - 0"

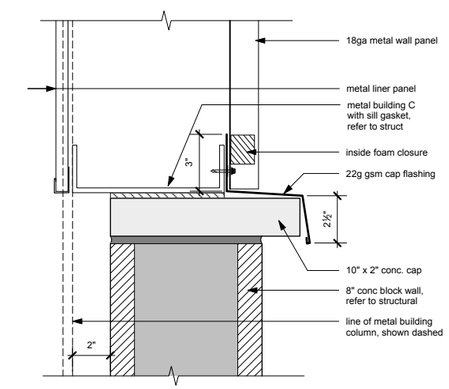

15 **TYP. FRAME WALL @ CMU WAINSCOT**
SCALE: 3" = 1' - 0"

REV	DATE	BY	DESCRIPTION

DESIGNED KH
DRAWN IW
CHECKED FFG
DATE SEPTEMBER 2013

LICENSED ARCHITECT STEVEN D. PULTS NO. 8611 REN. 06-30-15 STATE OF CALIFORNIA

PULTS Steven D. Pults, AIA & Associates, LLP

carollo

COUNTY OF SAN LUIS OBISPO 1850 CALIFORNIA

SAN LUIS OBISPO COUNTY

SAN LUIS OBISPO COUNTY
LOS OSOS WATER RECYCLING FACILITY PROJECT
ARCHITECTURAL
MAINTENANCE BUILDING
ARCHITECTURAL DETALS

VERIFY SCALES
BAR IS ONE INCH ON ORIGINAL DRAWING
0 1"
IF NOT ONE INCH ON THIS SHEET, ADJUST SCALES ACCORDINGLY

JOB NO. 8930A.11
DRAWING NO. 06AA08
SHEET NO. XXX OF XXX

GENERAL NOTES

1. THE FOLLOWING NOTES, TYPICAL DETAILS AND SCHEDULES SHALL APPLY TO ALL PHASES OF THIS PROJECT UNLESS OTHERWISE SHOWN OR NOTED.

2. SPECIFIC NOTES AND DETAILS SHALL TAKE PRECEDENCE OVER GENERAL NOTES AND TYPICAL DETAILS.

3. ALL MATERIALS AND WORKMANSHIP SHALL CONFORM TO THE MINIMUM STANDARDS OF THE 2010 EDITION OF THE CALIFORNIA BUILDING CODE (CBC) AND SUCH OTHER REGULATING AGENCIES EXERCISING AUTHORITY OVER ANY PORTION OF THE WORK. THE CONTRACTOR SHALL HAVE A COPY OF THE CBC ON THE JOB SITE.

4. THE "CONTRACT OR CONSTRUCTION DOCUMENTS" SHALL CONSIST OF THESE NOTES, DETAILS, SCHEDULES, PLANS, AND DRAWINGS, AS WELL AS ATTACHED SPECIFICATIONS.

5. ALL SPECIFICATIONS, INCLUDING BUT NOT LIMITED TO MATERIALS AND PRODUCTS, SHALL BE THOSE PUT FORTH IN THE "CONTRACT OR CONSTRUCTION DOCUMENTS". NO SUBSTITUTIONS SHALL BE PERMITTED TO BE USED OR ASSUMED TO BE USED IN THE BIDDING OR CONSTRUCTION PROCESS WITHOUT WRITTEN APPROVAL BY THE ENGINEER OF RECORD.

6. THE CONTRACTOR SHALL EXAMINE THE "CONTRACT OR CONSTRUCTION DOCUMENTS" AND SHALL NOTIFY THE ARCHITECT OR ENGINEER OF ANY DISCREPANCIES HE MAY FIND BEFORE PROCEEDING WITH THE WORK.

7. ALL INFORMATION ON EXISTING CONDITIONS SHOWN ON DRAWINGS ARE BASED ON BEST PRESENT KNOWLEDGE AVAILABLE, BUT WITHOUT GUARANTEE OF ACCURACY. THE CONTRACTOR SHALL VERIFY AND BE RESPONSIBLE FOR ALL DIMENSIONS AND CONDITIONS AT THE SITE AND SHALL NOTIFY THE ARCHITECT OR ENGINEER OF ANY DISCREPANCIES BETWEEN ACTUAL SITE CONDITIONS AND INFORMATION SHOWN ON OR IN THE "CONTRACT OR CONSTRUCTION DOCUMENTS" BEFORE PROCEEDING WITH WORK.

8. THE CONTRACTOR SHALL IMMEDIATELY NOTIFY THE ARCHITECT OR ENGINEER OF ANY CONDITION WHICH IN HIS OPINION MIGHT ENDANGER THE STABILITY OF THE STRUCTURE OR CAUSE DISTRESS OF THE STRUCTURE.

9. ALL WORK SHALL CONFORM TO THE BEST PRACTICE PREVAILING IN THE VARIOUS TRADES COMPRISING WORK. THE CONTRACTOR SHALL BE RESPONSIBLE FOR COORDINATING THE WORK OF ALL TRADES.

10. THESE "CONTRACT OR CONSTRUCTION DOCUMENTS" REPRESENT THE FINISHED STRUCTURE, AND DO NOT INDICATE THE METHOD OF CONSTRUCTION. THE CONTRACTOR SHALL SUPERVISE AND DIRECT THE WORK AND SHALL BE SOLELY RESPONSIBLE FOR CONSTRUCTION MEANS, METHODS, TECHNIQUES, SEQUENCES AND PROCEDURES.

11. INSPECTION AND APPROVAL FOR FABRICATOR'S SHOPS USED FOR FABRICATION OF STRUCTURAL LOAD BEARING MEMBERS, COMPONENTS, MATERIALS OR ASSEMBLIES SHALL CONFORM TO CBC SECTION 1704.2.

    A. LABELING (AS REQUIRED OR SPECIFIED) SHALL BE PROVIDED IN ACCORDANCE WITH CBC SECTION 1703.5.
    B. EVALUATION AND FOLLOW-UP INSPECTION SERVICES (AS REQUIRED OR SPECIFIED), SHALL CONFORM TO CBC SECTION 1703.6.

12. THE CONTRACTOR SHALL REFER TO THE SPECIFICATIONS FOR INFORMATION NOT COVERED BY THESE DRAWINGS AND GENERAL NOTES.

13. THE CONTRACTOR SHALL PROVIDE TEMPORARY BRACING AND SHORING FOR ALL STRUCTURAL MEMBERS AS REQUIRED FOR STRUCTURAL STABILITY OF THE STRUCTURE DURING ALL PHASES OF CONSTRUCTION.

14. THE CONTRACTOR SHALL TAKE ALL STEPS NECESSARY TO ENSURE PROPER ALIGNMENT OF THE STRUCTURE AFTER THE INSTALLATION OF ALL STRUCTURAL AND FINISH MATERIALS. THIS SHALL INCLUDE ANY NECESSARY PRELOADING OF THE STRUCTURE TO DETERMINE FINAL POSITION OF THE COMPLETED WORK.

15. OBSERVATION VISITS TO THE PROJECT SITE BY FIELD REPRESENTATIVES OF ARCHITECT AND/OR ENGINEER (SUPPORT SERVICES) SHALL NOT INCLUDE INSPECTIONS OF SAFETY OR PROTECTIVE MEASURES, NOR CONSTRUCTION PROCEDURES, TECHNIQUES OR METHODS. ANY SUPPORT SERVICES PERFORMED BY ARCHITECT OR ENGINEER DURING ANY PHASE OF CONSTRUCTION, SHALL BE DISTINGUISHED FROM CONTINUOUS AND DETAILED INSPECTION SERVICES (AS REQUIRED BY ANY REGULATING GOVERNMENTAL AGENCY, e.g. LOCAL BUILDING DEPARTMENT) PROVIDED BY OTHERS. THESE SUPPORT SERVICES, WHETHER OF MATERIAL OR WORK, ARE PERFORMED SOLELY FOR THE PURPOSE OF ASSISTING IN QUALITY CONTROL AND IN ACHIEVING CONFORMANCE WITH CONTRACT DOCUMENTS, BUT DO NOT GUARANTEE CONTRACTOR'S PERFORMANCE AND SHALL NOT BE CONSTRUED AS SUPERVISION OF CONSTRUCTION.

16. PROVIDE OPENINGS AND SUPPORTS AS REQUIRED PER TYPICAL DETAILS AND NOTES FOR MECHANICAL, PLUMBING, AND ELECTRICAL EQUIPMENT, VENTS, DUCTS, PIPING, ETC. ALL MECHANICAL, PLUMBING AND ELECTRICAL EQUIPMENT SHALL BE PROPERLY "SWAY BRACED" AGAINST LATERAL FORCES.

17. THESE NOTES, DETAILS, DRAWINGS AND SPECIFICATIONS (CONTRACT OR CONSTRUCTION DOCUMENTS) DO NOT CARRY NECESSARY PROVISIONS FOR CONSTRUCTION SAFETY. THESE DOCUMENTS AND ALL PHASES OF CONSTRUCTION HEREBY CONTEMPLATED ARE TO BE GOVERNED, AT ALL TIMES, BY APPLICABLE PROVISIONS OF THE CURRENT CALIFORNIA OCCUPATIONAL SAFETY AND HEALTH ACT.

18. WHERE ANY CONFLICT OCCURS BETWEEN THE REQUIREMENTS OF FEDERAL, STATE AND LOCAL LAWS, CODES, ORDINANCES, RULES AND REGULATIONS, THE MOST STRINGENT SHALL GOVERN.

19. REFER TO ARCHITECTURAL DRAWINGS TO COORDINATE WITH STRUCTURAL DRAWINGS. ANY DISCREPANCY BETWEEN THESE DRAWINGS SHALL BE REFERRED TO THE ARCHITECT OR ENGINEER FOR CLARIFICATION BEFORE START OF CONSTRUCTION.

20. WRITTEN DIMENSIONS SHALL HAVE PRECEDENCE OVER SCALED DIMENSIONS.

21. DRAWINGS (NOTES, SCHEDULES, DETAILS AND PLANS) SHALL HAVE PRECEDENCE OVER STRUCTURAL CALCULATIONS.

22. IN THE EVENT THAT CERTAIN FEATURES OF THE CONSTRUCTION ARE NOT FULLY SHOWN ON THE DRAWINGS OR CALLED FOR IN THE GENERAL NOTES OR SPECIFICATIONS, THEN THEIR CONSTRUCTION SHALL BE OF THE SAME CHARACTER AS FOR SIMILAR CONDITIONS THAT ARE SHOWN OR CALLED FOR.

23. CONTRACTOR SHALL HAVE A COPY OF PROJECT SOILS/GEOTECHNICAL/FOUNDATION INVESTIGATION ON THE JOB SITE.

24. ASTM DESIGNATION AND ALL STANDARDS REFER TO THE LATEST AMENDMENTS.

25. THESE STRUCTURAL "CONTRACT OR CONSTRUCTION DOCUMENTS" SHALL NOT BE MODIFIED WITHOUT PRIOR WRITTEN APPROVAL OF THE ENGINEER.

26. ONLY "APPROVED" STRUCTURAL WORKING DRAWINGS AND "CONTRACT OR CONSTRUCTION DOCUMENTS" ARE PERMITTED TO BE USED FOR CONSTRUCTION ON THIS PROJECT. ALL OTHER DRAWINGS OR DOCUMENTS ARE OBSOLETE AND ARE NOT PERMITTED ON THE JOB SITE, NOR SHALL THEY BE USED FOR ANY CONSTRUCTION PURPOSES. CONTRACTORS USING UNAPPROVED DRAWINGS OR DOCUMENTS ARE SOLELY RESPONSIBLE FOR ALL WORK NOT PERFORMED IN ACCORDANCE WITH THE "APPROVED" DRAWINGS.

27. SEE ARCHITECTURAL DRAWINGS FOR ALL FIRE PROTECTION REQUIREMENTS.

SHOP DRAWING AND CONTRACTOR SUBMITTAL REVIEW

1. SHOP DRAWINGS OR CONTRACTOR SUBMITTALS SHOULD BE PROVIDED FOR THE FABRICATION (OR MIXING) OF THE FOLLOWING (BUT NOT LIMITED TO) COMPONENTS OR ELEMENTS.

    A. CONCRETE (AND/OR GROUT) MIX DESIGNS.
    B. METAL BUILDING DRAWINGS AND CALCULATIONS.
    C. SUBSTITUTE OR ALTERNATE MATERIALS.

2. PROJECT CONTRACTOR SHALL BE RESPONSIBLE FOR PRODUCTION AND APPROVAL OF ALL SHOP DRAWINGS.

3. WHEN PROJECT CONTRACTOR SUBMITS SHOP DRAWINGS OR OTHER SUBMITTALS TO ARCHITECT/ENGINEER FOR REVIEW, SUBMITTAL PACKAGE SHALL CONTAIN SUFFICIENT COPIES THAT ARCHITECT/ENGINEER MAY RETAIN A COMPLETE COPY OF SUBMITTAL PACKAGE. IN ADDITION, PROJECT CONTRACTOR SHALL ALLOW SUFFICIENT TIME TO THOROUGHLY REVIEW SUBMITTAL PACKAGE (10 WORKING DAYS, MINIMUM).

4. REVIEW OF SHOP DRAWINGS OR CONTRACTOR SUBMITTAL BY ARCHITECT/ENGINEER DOES NOT IN ANY WAY CONSTITUTE APPROVAL OF SUBMITTAL PACKAGE. ARCHITECT/ENGINEER'S REVIEW IS FOR GENERAL CONFORMANCE WITH THE DESIGN CONCEPT AND CONTRACT DOCUMENTS. REVIEW SHALL NOT BE CONSTRUED AS RELIEVING PROJECT CONTRACTOR FROM COMPLIANCE WITH THE CONTRACT DOCUMENTS.

FOUNDATION NOTES

1. BASIS: GEOTECHNICAL REPORT PREPARED BY FUGRO CONSULTANTS, INC. DATED MAY 6, 2013.

2. ALLOWABLE SOIL BEARING PRESSURE:
    DEAD LOAD PLUS LIVE LOAD: 2,500 P.S.F.

3. UNEXPECTED SOIL CONDITIONS: ALLOWABLE VALUES AND FOUNDATION DESIGN ARE BASED UPON SOIL CONDITIONS SHOWN BY TEST BORINGS. ACTUAL SOIL CONDITIONS WHICH DEVIATE APPRECIABLY FROM THAT SHOWN IN THE TEST BORINGS SHALL BE REPORTED TO THE PROJECT SOILS ENGINEER IMMEDIATELY.

4. SEE SOILS OR FOUNDATION INVESTIGATION FOR COMPACTION, FILL, BACKFILLING, AND SITE PREPARATION REQUIREMENTS AND PROCEDURES.

5. EXCAVATE TO REQUIRED DEPTHS AND DIMENSIONS (AS INDICATED IN DRAWINGS AND PROJECT SOILS REPORT), CUT SQUARE AND SMOOTH WITH FIRM LEVEL BOTTOMS. CARE SHALL BE TAKEN NOT TO OVER-EXCAVATE FOUNDATION AT LOWER ELEVATION AND PREVENT DISTURBING OF SOILS AROUND HIGHER ELEVATION.

6. FOOTINGS SHALL BE POURED IN NEAT EXCAVATIONS, WITHOUT SIDE FORMS WHENEVER POSSIBLE.

7. CARRY ALL FOUNDATIONS TO REQUIRED DEPTHS INTO COMPACTED FILL OR NATURAL SOIL (AS PER STRUCTURAL PLANS AND DETAILS, AND PROJECT SOILS REPORT).

8. FOUNDATIONS SHALL NOT BE POURED UNTIL ALL REQUIRED REINFORCING STEEL, SLEEVES, INSERTS, CONDUITS, PIPES, ETC. AND FORMWORK IS PROPERLY PLACED AND INSPECTED BY THE LOCAL AUTHORITY HAVING JURISDICTION/INSPECTOR.

9. THE SIDES AND BOTTOMS OF EXCAVATIONS WHICH ARE TO HAVE CONCRETE CONTACT MUST BE MOISTENED SEVERAL TIMES JUST PRIOR TO POURING UPON THEM.

10. DE-WATER FOOTINGS, AS REQUIRED, TO MAINTAIN DRY WORKING CONDITIONS.

11. ALL FOUNDATION EXCAVATIONS SHALL BE INSPECTED AND APPROVED BY PROJECT SOILS ENGINEER, PRIOR TO FORMING AND PLACEMENT OF REINFORCING OR CONCRETE.

FOR ALL BUILDING MATERIALS AND HARDWARE SPECIFICATIONS, REFER TO PROJECT SPECIFICATIONS

CONCRETE REINFORCING SPLICES

BAR SIZE	LENGTH	fy	SPLICE CLASS
#3 & #4	24"	40 ksi (MIN.)	A
#5	36"	60 ksi (MIN.)	A
#6	48"	60 ksi (MIN.)	A

MASONRY REINFORCING SPLICES

BAR SIZE	LENGTH	fy	SPLICE CLASS
#3	16"	40 ksi (MIN.)	A
#4	20"	40 ksi (MIN.)	A
#5	25"	60 ksi (MIN.)	A
#6	30"	60 ksi (MIN.)	A

REV	DATE	BY	DESCRIPTION

DESIGNED JMM
DRAWN NWK
CHECKED MFS
DATE SEPTEMBER 2013

REGISTERED PROFESSIONAL ENGINEER MICHAEL F. SMITH NO. 35410 CIVIL STATE OF CALIFORNIA

SMITH STRUCTURAL GROUP, LLP
811 El Capitan Way, Suite 240 | 805.439.2110
San Luis Obispo, CA 93401 | smithstructural.com

carollo

SAN LUIS OBISPO COUNTY

SAN LUIS OBISPO COUNTY
LOS OSOS WATER RECYCLING FACILITY PROJECT
STRUCTURAL
MAINTENANCE BUILDING
GENERAL STRUCTURAL NOTES

VERIFY SCALES
BAR IS ONE INCH ON ORIGINAL DRAWING
0 1"
IF NOT ONE INCH ON THIS SHEET, ADJUST SCALES ACCORDINGLY

JOB NO. 8930A.11
DRAWING NO. 06AS01
SHEET NO. XXX OF XXX

SPECIAL INSPECTION

STRUCTURAL DESIGN VALUES

WIND DESIGN DATA	VALUE
BASIC WIND SPEED (3-SEC GUST)	90 MPH
WIND IMPORTANCE FACTOR	I= 1.0
WIND EXPOSURE(S)	C
APPLICABLE INTERNAL PRESSURE COEFFICIENT	+/- 0.18
DESIGN WIND PRESSURE(S) COEFFICIENT FOR COMPONENTS & CLADDING (NOT SPECIFICALLY DESIGNED BY THE REGISTERED DESIGN PROFESSIONAL)	q_z = 17.27 psf
EARTHQUAKE DESIGN DATA	**VALUE**
SEISMIC IMPORTANCE FACTOR	I= 1.0
OCCUPANCY CATEGORY	II
MAPPED SPECTRAL RESPONSE ACCELERATIONS	S_S= 1.450g S_1= 0.543g
SITE CLASS	C
SPECTRAL RESPONSE COEFFICIENTS	S_{DS}=0.970g S_{D1}=0.480g
SEISMIC DESIGN CATEGORY	D
BASIC SEISMIC-FORCE RESISTING SYSTEM	SEE METAL BUILDING CALCULATIONS
DESIGN BASE SHEAR	$V=C_sW_D$
SEISMIC RESPONSE COEFFICIENT(S)	C_s= SEE MBM
RESPONSE MODIFICATIONS FACTOR(S)	R= SEE MBM
ANALYSIS PROCEDURE USED	EQUIVALENT LATERAL FORCE PROCEDURE (ASCE 7 12.8)
LIVE LOAD DATA	**VALUE**
ROOF LIVE LOAD (REDUCIBLE)	20 psf

SPECIAL INSPECTION GENERAL NOTES

1. ALL SPECIAL INSPECTION SHALL BE PROVIDED IN ACCORDANCE WITH CBC SECTION 1704 AND 1705.
2. WHERE SPECIAL INSPECTION IS REQUIRED, ALL INSPECTION OR TESTING SHALL BE PROVIDED BY AN "APPROVED AGENCY" IN ACCORDANCE WITH CBC SECTION 1702.1, 1703.1 AND 1704.1
3. SPECIAL INSPECTORS SHALL KEEP RECORDS OF INSPECTIONS. THE SPECIAL INSPECTOR SHALL FURNISH INSPECTION REPORTS TO THE AUTHORITY HAVING JURISDICTION, AND TO THE ARCHITECT OR ENGINEER. REPORTS SHALL INDICATE THAT WORK INSPECTED WAS DONE IN CONFORMANCE TO APPROVED CONSTRUCTION DOCUMENTS. DISCREPANCIES SHALL BE BROUGHT TO THE IMMEDIATE ATTENTION OF THE CONTRACTOR FOR CORRECTION. IF THE DISCREPANCIES ARE NOT CORRECTED, THE DISCREPANCIES SHALL BE BROUGHT TO THE ATTENTION OF THE AUTHORITY HAVING JURISDICTION AND TO THE ARCHITECT OR ENGINEER PRIOR TO THE COMPLETION OF THAT PHASE OF WORK. A FINAL REPORT DOCUMENTING REQUIRED SPECIAL INSPECTIONS AND CORRECTION OF ANY DISCREPANCIES NOTED IN THE INSPECTIONS SHALL BE SUBMITTED AT A POINT IN TIME AGREED UPON BY THE PERMIT APPLICANT AND THE AUTHORITY HAVING JURISDICTION PRIOR TO THE START OF WORK.
4. SPECIAL INSPECTORS SHALL BE APPROVED BY LOCAL AUTHORITY HAVING JURISDICTION IN ACCORDANCE WITH CBC SECTION 1704.1
5. SEE ARCHITECTURAL DRAWINGS FOR SPRAYED FIRE-RESISTANT REQUIREMENTS.
   A. SPECIAL INSPECTION MAY BE REQUIRED IN ACCORDANCE WITH CBC SECTION 1704.12 AND 1704.13
   B. SPECIAL INSPECTION MAY BE REQUIRED FOR SMOKE CONTROL SYSTEMS IN ACCORDANCE WITH CBC 1704.16
6. SEE MECHANICAL, PLUMBING AND ELECTRICAL DRAWINGS FOR SPECIAL INSPECTION REQUIREMENTS.
   A. SPECIAL INSPECTION MAY BE REQUIRED IN ACCORDANCE WITH CBC SECTION 1707.7 AND 1708.4
   B. SPECIAL INSPECTION MAY BE REQUIRED FOR SMOKE CONTROL SYSTEMS IN ACCORDANCE WITH CBC 1704.16
7. SEE PROJECT SOILS REPORT FOR ALL SPECIAL INSPECTION REQUIREMENTS FOR EXISTING SOILS CONDITIONS, FILL PLACEMENT AND LOAD-BEARING REQUIREMENTS.
   A. SPECIAL INSPECTION MAY BE REQUIRED IN ACCORDANCE WITH CBC SECTION 1704.7, 1704.8, 1704.9, 1704.10 AND 1704.11
8. SEE ARCHITECTURAL DRAWINGS FOR SPECIAL INSPECTION FOR EXTERIOR INSULATION AND FINISH SYSTEMS (EIFS), STORAGE RACKS AND ACCESS FLOORS, AND ARCHITECTURAL COMPONENTS.
   A. SPECIAL INSPECTION MAY BE REQUIRED IN ACCORDANCE WITH CBC SECTION 1704.14, 1707.5 AND 1707.6
9. LOCAL AUTHORITY HAVING JURISDICTIONS MAY REQUIRE SPECIAL INSPECTION FOR "SPECIAL CASES" IN ACCORDANCE WITH CBC SECTION 1704.15
10. CONTRACTOR'S RESPONSIBILITY: EACH CONTRACTOR RESPONSIBLE FOR THE CONSTRUCTION OF A MAIN SEISMIC-FORCE-RESISTING SYSTEM, DESIGNATED SEISMIC SYSTEM OR A SEISMIC-RESISTING COMPONENT LISTED IN THE STATEMENT OF SPECIAL INSPECTION SHALL SUBMIT A WRITTEN STATEMENT OF RESPONSIBILITY TO THE AUTHORITY HAVING JURISDICTION AND THE OWNER PRIOR TO THE COMMENCEMENT OF WORK ON THE SYSTEM OR COMPONENT. THE CONTRACTOR'S STATEMENT OF RESPONSIBILITY SHALL CONTAIN THE FOLLOWING:
    A. ACKNOWLEDGEMENT OF AWARENESS OF THE SPECIAL REQUIREMENTS CONTAINED IN THE STATEMENT OF SPECIAL INSPECTIONS;
    B. ACKNOWLEDGEMENT THAT CONTROL WILL BE EXERCISED TO OBTAIN CONFORMANCE WITH THE CONSTRUCTION DOCUMENTS APPROVED BY THE AUTHORITY HAVING JURISDICTION;
    C. PROCEDURES FOR EXERCISED CONTROL WITHIN THE CONTRACTOR'S ORGANIZATION, THE METHOD AND FREQUENCY OF REPORTING AND THE DISTRIBUTION OF THE REPORTS; AND
    D. IDENTIFICATION AND QUALIFICATIONS OF THE PERSON(S) EXERCISING SUCH CONTROL AND THEIR POSITION(S) IN THE ORGANIZATION.
11. SPECIAL INSPECTION MAY BE REQUIRED FOR INSTALLATION OF ANCHORS INTO HARDENED CONCRETE, AS PER APPROVED I.C.C. REPORT.

CONCRETE CONSTRUCTION (1)(2)

VERIFICATION AND INSPECTION	CONTINUOUS	PERIODIC	REFERENCE
1. INSPECTION OF REINFORCING STEEL AND PLACEMENT.		✓	ACI 318: 3.5, 7.1-7, (2)
2. INSPECT BOLTS TO BE INSTALLED IN CONCRETE PRIOR TO AND DURING PLACEMENT OF CONCRETE WHERE ALLOWABLE LOADS HAVE BEEN INCREASED OR WHERE STRENGTH DESIGN HAS BEEN USED.	✓		ACI 318: 8.1.3, 21.2.8, CBC 1911.5, 1912.1
3. VERIFYING USE OF REQUIRED DESIGN MIX.		✓	ACI 318: Ch. 4, 5.2-5.4, CBC 1904.2.2, 1913.2-3
4. AT THE TIME FRESH CONCRETE IS SAMPLED TO FABRICATE SPECIMENS FOR STRENGTH TESTS, PERFORM SLUMP AND AIR CONTROL TESTS, AND DETERMINE THE TEMPERATURE OF THE CONCRETE.	✓		ASTM C 172, ASTM C 31, ACI 318:5.6,5.8 CBC 1913.10 (4)
5. INSPECTION OF CONCRETE PLACEMENT FOR PROPER APPLICATION TECHNIQUES.	✓		ACI 318:5.9-10, CBC 1913.6-8
6. INSPECTION FOR MAINTENANCE OF SPECIFIED CURING, TEMPERATURE AND TECHNIQUES.		✓	ACI 318:5.11-13 CBC 1913.9
7. VERIFICATION OF IN-SITU CONCRETE STRENGTH, PRIOR TO REMOVAL OF SHORES AND FORMS FROM BEAMS AND STRUCTURAL SLABS.		✓	ACI 318: 6.2
8. INSPECT FORMWORK FOR SHAPE, LOCATION AND DIMENSIONS OF THE CONCRETE MEMBER BEING FORMED.		✓	ACI 318: 6.1.1

NOTES:
1. SEE CBC SECTION 1704.4 AND TABLE 1704.4
2. SEE CBC SECTION 1913.4
3. SPECIAL INSPECTION NOT REQUIRED FOR 3 STORY OR LESS BLDG. SUPPORTED BY ROCK OR EARTH FOR THE FOLLOWING:
   A. ISOLATED SPREAD FOOTINGS.
   B. CONTINUOUS CONCRETE FOOTINGS.
   C. NONSTRUCTURAL CONCRETE SLAB ON GRADE.
4. TEST CYLINDERS/SPECIMENS
   A. CONCRETE STRENGTH SHALL BE VERIFIED BY STANDARD CYLINDER TESTS (IN ACCORDANCE WITH CBC SECTION 1905) MADE BY AN APPROVED TESTING LABORATORY. CONTRACTOR SHALL MAINTAIN COPIES OF TEST REPORTS AT JOB SITE AND AVAILABLE FOR REVEW AND INSPECTION BY BUILDING OFFICIALS. MAKE 3, MINIMUM TEST CYLINDERS FOR EACH DAY'S POUR. TEST EACH BATCH OF CYLINDERS AS FOLLOWS: 1 AT 7 DAYS, AND 2 AT 28 DAYS.
   B. SEE ALSO REQUIREMENTS A.C.I. SECTION 5.6.

MASONRY CONSTRUCTION (1)(2)

VERIFICATION AND INSPECTION	CONTINUOUS	PERIODIC	REFERENCE
1. COMPLIANCE WITH REQUIRED INSPECTION PROVISIONS OF THE CONSTRUCTION DOCUMENTS AND THE APPROVED SUBMITTALS SHALL BE VERIFIED.		✓	
2. AS MASONRY CONSTRUCTION BEGINS, THE FOLLOWING SHALL BE VERIFIED TO ENSURE COMPLIANCE:			
A. PROPORTIONS OF SITE-PREPARED MORTAR.		✓	
B. CONSTRUCTION OF MORTAR JOINTS.		✓	
C. LOCATION OF REINFORCEMENT, CONNECTORS AND ANCHORAGES.		✓	
3. DURNG CONSTRUCTION THE INSPECTION PROGRAM SHALL VERIFY:			
A. SIZE AND LOCATION OF STRUCTURAL ELEMENTS.		✓	
B. TYPE, SIZE AND LOCATION OF ANCHORS, INCLUDING OTHER DETAILS OF ANCHORAGE OF MASONRY TO STRUCTURAL MEMBERS, FRAMES OR OTHER CONSTRUCTION.		✓	
C. SPECIFIED SIZE, GRADE AND TYPE OF REINFORCEMENT.		✓	
D. WELDING OF REINFORCING BARS.	✓		
E. PROTECTION OF MASONRY DURING COLD WEATHER (TEMPERATURES BELOW 40°F) OR HOT WEATHER (TEMPERATURE ABOVE 90°F)		✓	CBC 2104.3, 2104.4
4. PRIOR TO GROUTING, THE FOLLOWING SHALL BE VERIFIED TO ENSURE COMPLIANCE:			
A. GROUT SPACE IS CLEAN.		✓	
B. PLACEMENT OF REINFORCEMENT AND CONNECTORS.		✓	
C. PROPORTIONS OF SITE-PREPARED GROUT.		✓	
D. CONSTRUCTION OF MORTAR JOINTS.		✓	
5. GROUT PLACEMENT SHALL BE VERIFIED TO ENSURE COMPLIANCE WITH CODE AND CONSTRUCTION DOCUMENT PROVISIONS.	✓		
6. PREPARATION OF ANY REQUIRED GROUT SPECIMENS, MORTAR SPECIMENS AND/OR PRISMS SHALL BE OBSERVED.		✓	CBC 2105.2.2, 2105.3

NOTES:
1. SEE CBC SECTION 1704.5 AND 1708.1
2. SEE CBC TABLE 1704.5.1

STEEL CONSTRUCTION (1)(2)

VERIFICATION AND INSPECTION	CONTINUOUS	PERIODIC	REFERENCE
HIGH STRENGTH BOLTING			
1. IDENTIFICATION MARKINGS TO CONFORM TO ASTM STANDARDS SPECIFIED IN APPROVED CONSTRUCTION DOCUMENTS.		✓	AISC 360 A3.3
2. MANUFACTURER'S CERTIFICATE OF COMPLIANCE REQUIRED.		✓	
3. SNUG-TIGHT JOINTS.		✓	AISC 360 M2.5 CBC 1704.3.3 (5)
4. PRE-TENSIONED AND SLIP-CRITICAL JOINTS USING TURN-OF-NUT WITH MATCHMARKING, TWIST-OFF BOLT OR DIRECT TENSION INDICATOR METHODS OF INSTALLATION.		✓	AISC 360 M2.5 CBC 1704.3.3 (5)
5. PRETENSIONED AND SLIP CRITICAL JOINTS USING TURN-OF-NUT WITHOUT MATCHMARKING OR CALIBRATED WRENCH METHODS OF INSTALLATION.	✓		AISC 360 M2.5 CBC 1704.3.3 (5)
MATERIAL VERIFICATION OF STRUCTURAL STEEL AND COLD-FORMED STEEL DECK			
6. FOR STRUCTURAL STEEL, IDENTIFICATION MARKINGS TO CONFORM TO AISC 360.		✓	AISC 360 M5.5
7. FOR OTHER STEEL, IDENTIFICATION MARKINGS TO CONFORM TO ASTM STANDARDS SPECIFIED IN THE APPROVED CONSTRUCTION DOCUMENTS.		✓	
8. MANUFACTURER'S CERTIFICATION TEST REPORTS.		✓	
MATERIAL VERIFICATION OF WELD FILLER MATERIALS			
9. IDENTIFICATION MARKINGS CONFORM TO AWS SPECIFICATION IN THE APPROVED CONSTRUCTION DOCUMENTS.		✓	AISC 360 A3.5
10. MANUFACTURER'S CERTIFICATE OF COMPLIANCE REQUIRED.		✓	
WELDING - STRUCTURAL STEEL (3)			
11. COMPLETE AND PARTIAL PENETRATED GROOVE WELDS.	✓		AWS D1.1 CBC 1704.3.1
12. MULTIPASS FILLET WELDS.	✓		AWS D1.1 CBC 1704.3.1
13. SINGLE-PASS FILLET > 5/16"	✓		AWS D1.1 CBC 1704.3.1
14. PLUG AND SLOT WELDS	✓		AWS D1.1 CBC 1704.3.1
15. SINGLE-PASS FILLET ≤ 5/16"		✓	AWS D1.1 CBC 1704.3.1
16. FLOOR AND ROOF DECKS.		✓	AWS D1.3

NOTES:
1. SEE CBC SECTION 1704.3 AND 1707.2
2. SEE CBC TABLE 1707.3
3. EXCEPTION FOR WELDING : THE SPECIAL INSPECTOR NEED NOT BE CONTINUOUSLY PRESENT DURING WELDING OF THE FOLLOWING ITEMS, PROVIDED THE MATERIALS, WELDING PROCEDURES AND QUALIFICATIONS OF WELDERS ARE VERIFIED PRIOR TO THE START OF THE WORK; PERIODIC INSPECTIONS ARE MADE OF THE WORK IN PROGRESS; AND A VISUAL INSPECTION OF ALL WELDS IS MADE PRIOR TO COMPLETION OR PRIOR TO SHIPMENT OF SHOP WELDING.
   A. SINGLE-PASS FILLET WELDS NOT EXCEEDING 5/16" IN SIZE.
   B. FLOOR AND ROOF DECK WELDING.
   C. WELDED STUDS WHEN USED FOR STRUCTURAL DIAPHRAGM.
   D. WELDED SHEET STEEL FOR COLD-FORMED STEEL FRAMING MEMBERS SUCH AS STUDS AND JOISTS.
   E. WELDING OF STAIRS AND RAILING SYSTEMS.
4. ALL METHODS OF INSTALLATION FOR HIGH STRENGTH BOLTS SHALL REQUIRE VERIFICATION OF PRE-TENSION BY A SKIDMORE-WILHELM CALIBRATOR FOR EACH BATCH OR SOURCE OF BOLTS USED. (SEE MINIMUM BOLT PRETENSION CHART).

MINIMUM BOLT PRETENSION (KIPS)

BOLT SIZE , INCHES	A325 BOLTS	A490 BOLTS
1/2" DIAMETER	12	15
5/8" DIAMETER	19	24
3/4" DIAMETER	28	35
7/8" DIAMETER	39	49
1" DIAMETER	51	64
1 1/8" DIAMETER	56	80
1 1/4" DIAMETER	71	102
1 3/8" DIAMETER	85	121
1 1/2" DIAMETER	103	148

SOILS

VERIFICATION AND INSPECTION	CONTINUOUS	PERIODIC	REFERENCE
1. VERIFY MATERIALS BELOW SHALLOW FOUNDATIONS ARE ADEQUATE TO ACHIEVE THE DESIGN BEARING CAPACITY.		✓	
2. VERIFY EXCAVATIONS ARE EXTENDED TO PROPER DEPTH AND HAVE REACHED PROPER MATERIAL.		✓	
3. PERFORM CLASSIFICATION AND TESTING OF COMPACTED FILL MATERIALS.		✓	
4. VERIFY USE OF PROPER MATERIALS, DENSITIES AND LIFT THICKNESSES DURING PLACEMENT AND COMPACTION OF COMPACTED FILL.	✓		
5. PRIOR TO PLACEMENT OF COMPACTED FILL, OBSERVE SUBGRADE AND VERIFY THAT SITE HAS BEEN PREPARED PROPERLY.		✓	

NOTES:
1. SEE CBC SECTION 1704.7 AND TABLE 1704.7

REV	DATE	BY	DESCRIPTION

DESIGNED JMM
DRAWN NWK
CHECKED MFS
DATE SEPTEMBER 2013

REGISTERED PROFESSIONAL ENGINEER MICHAEL F SMITH NO. 35470 CIVIL STATE OF CALIFORNIA

SMITH STRUCTURAL GROUP, LLP
811 El Capitan Way, Suite 240 | 805.439.2110
San Luis Obispo, CA 93401 | smithstructural.com

carollo®

SAN LUIS OBISPO COUNTY

SAN LUIS OBISPO COUNTY
LOS OSOS WATER RECYCLING FACILITY PROJECT
STRUCTURAL
MAINTENANCE BUILDING
GENERAL STRUCTURAL NOTES

VERIFY SCALES
BAR IS ONE INCH ON ORIGINAL DRAWING
0 1"
IF NOT ONE INCH ON THIS SHEET, ADJUST SCALES ACCORDINGLY

JOB NO. 8930A.11
DRAWING NO. 06AS02
SHEET NO. XXX OF XXX

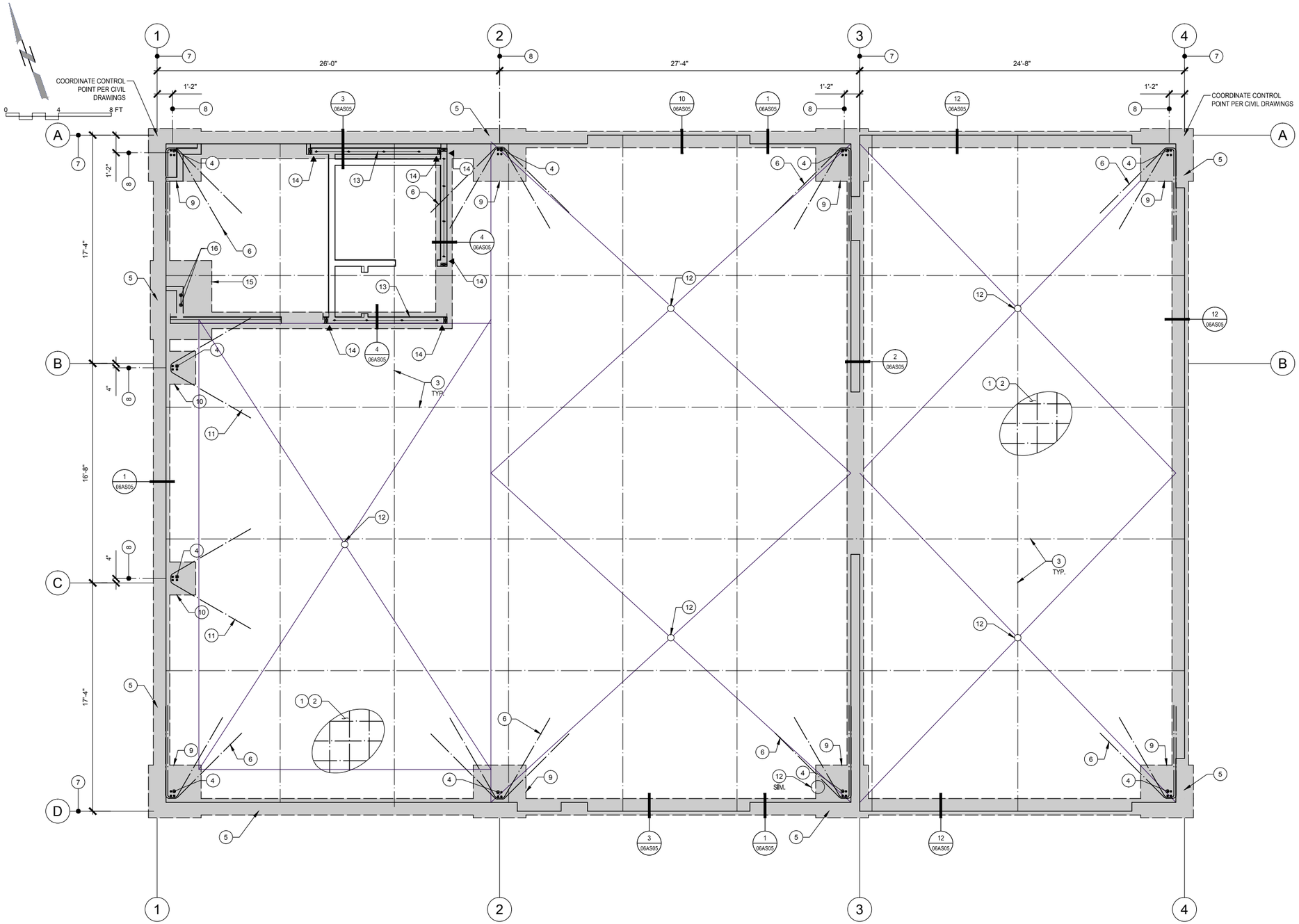

1 FOUNDATION PLAN

SCALE: 1/4" = 1'-0"

(VERIFY ALL DIMENSIONS WITH ARCHITECTURAL PLANS AND EXISTING CONDITIONS)

GENERAL FOUNDATION NOTES:

I. The foundation design shall be based on the minimum requirements as set forth in Chapter 18 of the 2010 edition of the California Building Code, Project Soils Report by Fugro consultants, Inc. Project no. 04.6212.0178. If any unusual conditions exist, the Contractor shall notify the Architect prior to commencing with any additional work.

II. Prior to the Contractor requesting a Foundation Inspection, the Soils Engineer shall advise the Building Official in writing that:

i. The building pad was prepared in accordance with C.B.C. and Soils Engineer's recommendations.

ii. The utility trenches have been properly backfilled and compacted.

iii. The foundation excavations comply with the Soils Engineer's recommendations.

III. Holdowns, anchor bolts, tiedown anchors, foundation straps, etc. shall be in place held by templates or wire ties, prior to concrete inspection.

IV. See General Structural Notes for Special Inspection requirements for foundation construction.

V. All fasteners & anchor bolts into preservative- treated & fire retardant treated wood that are highly corrosive, shall be hot dipped zinc coated galvanized, stainless steel, silicon bronze or copper. Standard galvanized connectors (G60) may be used for low corrosive sill plate material.

FOUNDATION REFERENCE NOTES: (#)

(1) General Typical Notes: See Structural Notes, sheet S-1 and S-2
- A. Refer to project specifications for concrete strength requirements.
- B. See Architectural and Metal Building Drawings for all embedded items and non-structural components associated with concrete work.
- C. Holdowns, anchor bolts, tiedown anchors, foundation straps, etc. shall be in place held by templates or wire ties, prior to concrete inspection.
- D. See typical details 1/05AS06, 2/05AS06 and 6/05AS06.
- E. See detail 4/05AS06 for building pad preparation.

2. 6" Concrete slab with #5 @ 12" o.c. at mid-depth of slab.
- A. See detail 6/05AS05.
- B. See Project Soils Report.
- C. Slab thickness to remain constant at sloping conditions, see Architectural drawings for slopes.

3. Concrete Control Joints @ 10'-0" o.c. maximum, verify with Architectural for complete layout.
- A. Provide tooled edge at joint.
- B. Option: Saw cut - See detail 3/05AS06.

4. Column bolt group per Metal Building manufacturer.
- A. See anchor bolt plan by others for placement.
- B. Embed Anchor Bolts 18" min. into first pour footing, see detail 5/06AS05.
- C. Anchor Bolts to be F1554 grade 36 all thread rod w/ 3x3x5/16" plate washer and double nut at embedded end. Bolt diameters shall be as indicated on Metal Building Plans.
- D. Special inspection required, see sheet 06AS02.

5. 8" fully grouted CMU wainscot wall.
- A. 48" max height above finish slab
- B. See detail 1/06AS05, 2/06AS05, and 3/06AS05.
- C. See detail 11/06AS05 for wall corner construction.

6. 2-#4 hairpin at footing w/ 10'-0" legs.
- A. See details 8/06AS05 and 9/06AS05.
- B. Splay legs 60°, and 120°, and 30° at corners

7. Edge of slab

8. Centerline of column/footing

9. 4'-0" square x 30" deep concrete pad footing.
- A. Provide #5 @ 9" o.c. each way, top and bottom.
- B. See detail 05/06AS05.
- C. Center on primary column bolt group.
- D. Footing is to be verified once Metal Building Calculations are made available.

10. 2'-6" square x 30" deep concrete pad footing.
- A. Provide #5 @ 9" o.c. each way, top and bottom.
- B. See detail 05/06AS05.
- C. Center on column bolt group.
- D. Footing is to be verified once Metal Building Calculations are made available.

11. 1-#4 hairpin at footing w/ 10'-0" legs.
- A. See detail 8/06AS05.
- B. Splay legs 120°.

12. Drain at slab on grade
- A. See detail 13/06AS05.
- B. Verify location with Architectural Plans.

13. 2x P.T.D.F. sill plate along length of shearwall with 5/8" diameter anchor bolts @ 32" o.c.
- A. Provide 3"x3"x1/4" plate washer at all sill plate anchors.
- B. 3 bolts minimum.

14. Simpson HDU2 holdown to double 2x at end of shearwall
- A. See detail 15/05AS06 for installation requirements.

15. 4'-8" x 5'-6" x 30" pad footing centered below Strong Wall Panel
- A. Provide #5 bars @ 9" o.c., ea. way, top and bottom
- B. See detail 06/06AS06.

16. Simpson SSWAB1HS anchor bolt at each end of Strong Wall panel
- A. 20" minimum embedment into pad footing below, as measured from top of footing
- B. See detail 1/06AS06 for installation requirements

REV	DATE	BY	DESCRIPTION

DESIGNED JMM
DRAWN NWK
CHECKED MFS
DATE SEPTEMBER 2013

REGISTERED PROFESSIONAL ENGINEER MICHAEL F. SMITH NO. 35410 CIVIL STATE OF CALIFORNIA

SMITH STRUCTURAL GROUP, LLP
811 El Capitan Way, Suite 240 | 805.439.2110
San Luis Obispo, CA 93401 | smithstructural.com

carollo®

SAN LUIS OBISPO COUNTY

SAN LUIS OBISPO COUNTY
LOS OSOS WATER RECYCLING FACILITY PROJECT
STRUCTURAL
MAINTENANCE BUILDING
FOUNDATION PLAN

VERIFY SCALES
BAR IS ONE INCH ON ORIGINAL DRAWING
0 1"
IF NOT ONE INCH ON THIS SHEET, ADJUST SCALES ACCORDINGLY

JOB NO. 8930A.11
DRAWING NO. 06AS03
SHEET NO. XXX OF XXX

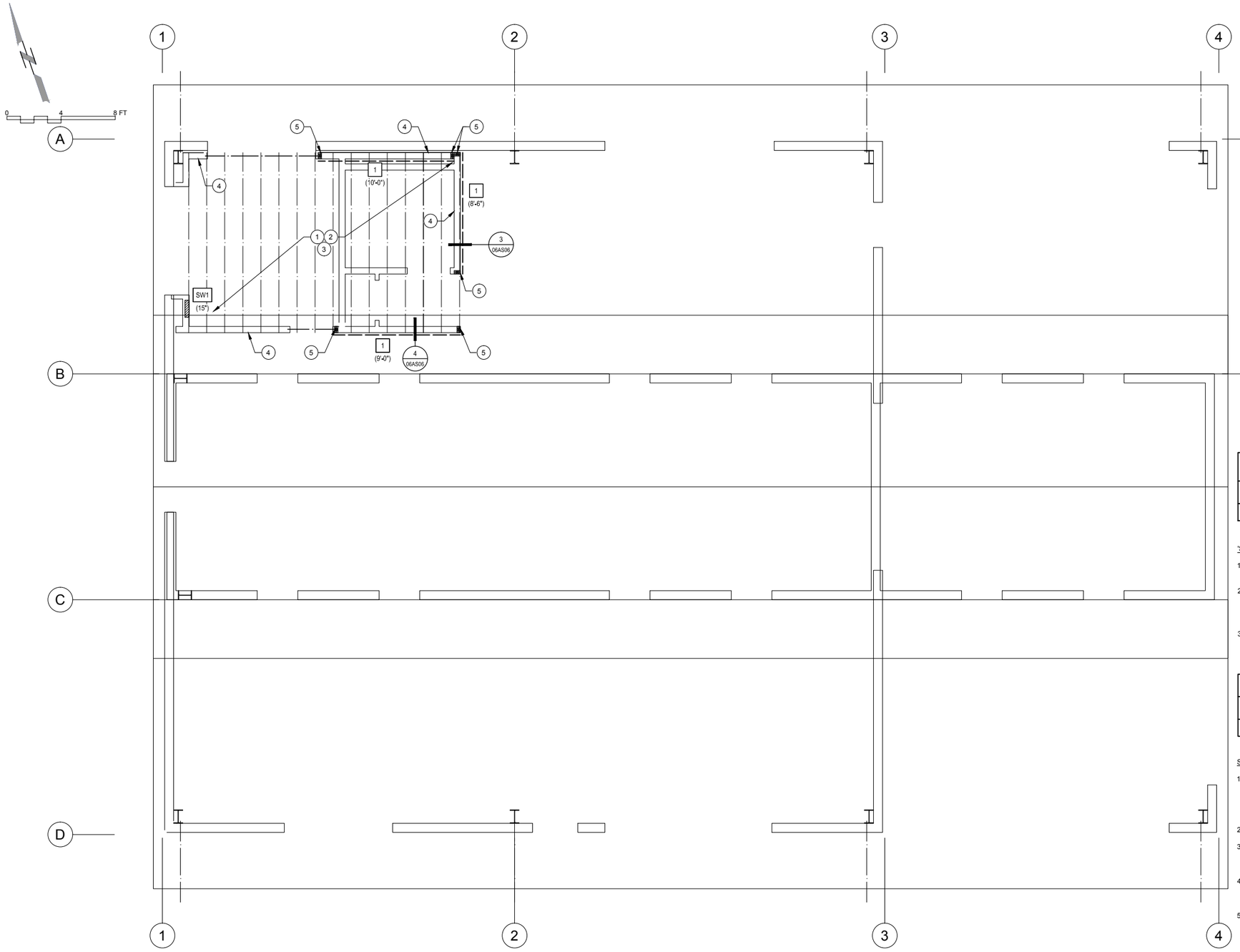

CEILING FRAMING REFERENCE NOTES:

1. General Typical Notes: See General Structural Notes
   A. Refer to Architectural Floor Plans for interior non-bearing walls, soffits, and eave details, and miscellaneous non-structural details and requirements.
   B. Double 2x framing members shall be stitch nailed with 16d @ 6" o.c. (typical, U.N.O.).

2. Typical Ceiling Sheathing: ¾" Structural I Plywood
   A. Panel Index: 32/16.
   B. Use exterior grade where plywood is exposed to weather.
   C. Nail with 10d @ 6"-6"-12" o.c.
   D. Lay with face grain perpendicular to framing.
   E. Stagger sheets.
   F. See detail 14/06AS05.

3. 1¾"x11⅞"" 2.0 Redlam LVL Ceiling Joists @ 16" o.c.

4. 2x6 (minimum) Stud Bearing Wall.
   A. 2x6 DF #2 studs (minimum) @ 16" o.c. (U.N.O.).
   B. Use 6x10 DF #1 header over all doors and windows (U.N.O.).
   C. See detail 05/05AS06 for typical top plate splice.

5. Double 2x6 DF #2 post at end of shearwall.
   A. See typical shearwall elevation, detail 12/05AS06
   B. Member to receive shearwall plywood edge nailing and holdown at floor level.

'STRONG-WALL' SCHEDULE

SYMBOL	MODEL NUMBER (1)	TOP PLATE CONNECTION (2)	SHEAR REINFORCEMENT (6)	HOLDOWN ANCHOR	DETAIL	REMARKS
SW1	SSW 15x9	6 - SDS ¼x3½" SCREWS	(1) #3 HAIRPIN (L_h = 12")	'SSWAB1 HS' w/ 20" MIN. EMBED.	1/06AS06 2/06AS06	(3)(4)(5)

'STRONG-WALL' SCHEDULE NOTES:

1. Simpson 'Steel Strong-Wall', ICC-ES ESR-1679. Install per manufacturer's specifications.
2. Simpson 'SDS' screws, ICC-ES ESR-2236.
   A. Use Simpson 'SDS' screws with double barrier coating, (yellow zinc dichromate and hot-dip galvanized) when installing into pressure treated wood.
3. Verify curb height or finish surface for proper 'Strong-Wall' nominal height.
4. All Simpson Strong Wall embeds shall be secured to formwork using corresponding Simpson Strong Wall Anchor Bolt Templates.
5. Simpson Strong Wall shall bear directly on concrete.
6. Hairpin within slab/curb at embedded holdown anchor

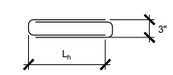

SHEARWALL SCHEDULE (13)

SYMBOL	SHEATHING (6)(7)(8)	NAILING (1)	SILL PLATE CONNECTION	SOLE PLATE CONNECTION	DETAIL	REMARKS
1	⅜" PLYWOOD (2)	10d @ 6"-12"o.c.	2x P.T.D.F. SILL (4) w/ ⅝" A.B. @ 32"o.c.	N/A	7/05AS06	(5)

SHEARWALL SCHEDULE NOTES:

1. "Common" type nails.
   A. Fasteners in preservative-treated lumber shall be stainless steel, silicon bronze, copper or hot dip zinc coated galvanized steel fasteners.
   B. Zinc-coated fasteners shall conform to A.S.T.M. A153
2. Structural I, Douglas Fir-Larch plywood, with all edges blocked.
3. 2x P.T.D.F. foundation sill plate, minimum two anchor bolts per plate with one anchor bolt 6" to 12" from each end of plate. Provide 3"x3"x¼" plate washer at all anchor bolts.
4. 3x P.T.D.F. foundation sill plate, minimum two anchor bolts per plate with one anchor bolt 6" to 12" from each end of plate. Provide 3"x3"x¼" plate washer at all anchor bolts.
5. Refer to Foundation and Floor Framing plans for wall holdowns.
6. All edges blocked
7. Sheathing shall be continuous entire height of wall (foundation to ceiling, foundation to roof, or ceiling to roof).
8. Continue sheathing (and nailing) over side of post at end of shearwall.
9. 3x (minimum) studs and blocking at all abutting panel edges. Stagger nailing at all adjoining panel edges.
10. Stagger nailing at sill/bottom plate.
11. Simpson SDS ¼" x 6" wood screws.
12. Plywood both sides: Panel joints shall be offset to fall on different framing members or framing shall be 3x (minimum). Nails shall be staggered on each side.
13. Project Engineer to review and approve all shearwall penetrations prior to installation.

1 FLOOR FRAMING AND ROOF PLAN

SCALE: 1/4" = 1'-0"

REV	DATE	BY	DESCRIPTION

DESIGNED JMM
DRAWN NWK
CHECKED MFS
DATE SEPTEMBER 2013

REGISTERED PROFESSIONAL ENGINEER MICHAEL F. SMITH NO. 35410 CIVIL STATE OF CALIFORNIA

SMITH STRUCTURAL GROUP, LLP
811 El Capitan Way, Suite 240 | 805.439.2110
San Luis Obispo, CA 93401 | smithstructural.com

carollo

SAN LUIS OBISPO COUNTY

SAN LUIS OBISPO COUNTY
LOS OSOS WATER RECYCLING FACILITY PROJECT
STRUCTURAL
MAINTENANCE BUILDING
FLOOR AND LOWER ROOF FRAMING PLAN

VERIFY SCALES
BAR IS ONE INCH ON ORIGINAL DRAWING
0 1"
IF NOT ONE INCH ON THIS SHEET, ADJUST SCALES ACCORDINGLY

JOB NO. 8930A.11
DRAWING NO. 06AS04
SHEET NO. XXX OF XXX

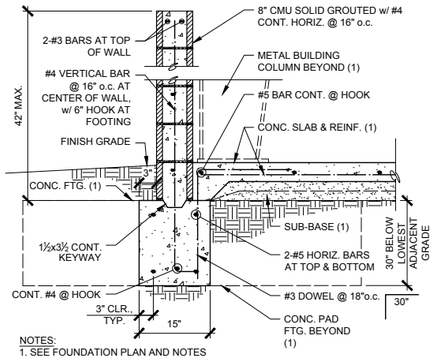

NOTES:
1. SEE FOUNDATION PLAN AND NOTES

PERIMETER FOOTING (1)

N.T.S.

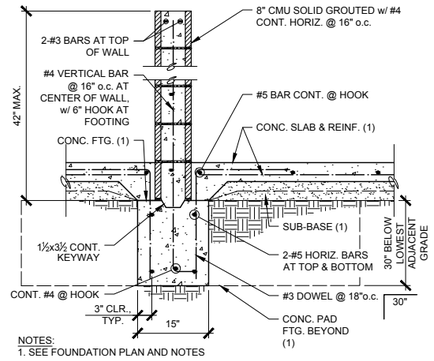

NOTES:
1. SEE FOUNDATION PLAN AND NOTES

INTERIOR FOOTING (2)

N.T.S.

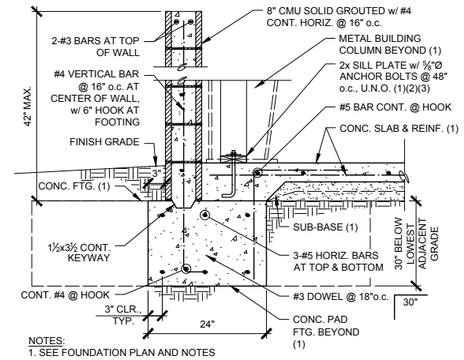

NOTES:
1. SEE FOUNDATION PLAN AND NOTES
2. SEE SHEARWALL SCHEDULE AND NOTES
3. 3" SQ. x ¼" THICK PLATE WASHER, EA. ANCHOR BOLT

PERIMETER FOOTING (3)

N.T.S.

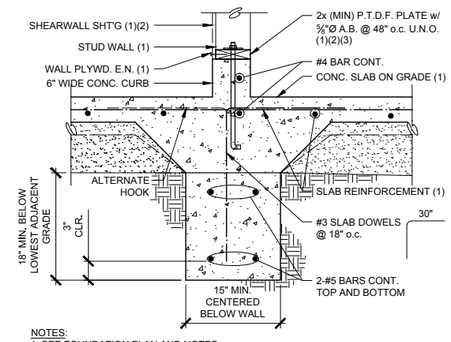

NOTES:
1. SEE FOUNDATION PLAN AND NOTES
2. SEE SHEARWALL SCHEDULE AND NOTES
3. 3: SQ. x ¼" THICK PLATE WASHER, EA. ANCHOR BOLT

CONTINUOUS INT. FOOTING (4)

N.T.S.

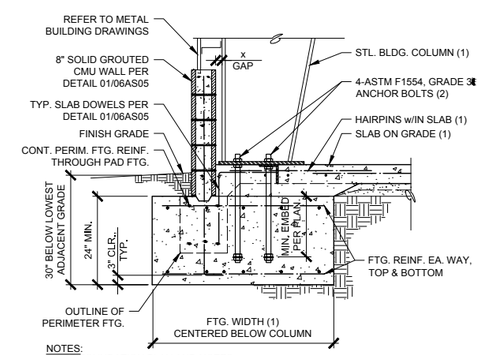

NOTES:
1. SEE FOUNDATION PLAN AND NOTES
2. SEE DETAIL 07/06AS05 FOR THRUST ANGLE

BUILDING COLUMN (5)

N.T.S.

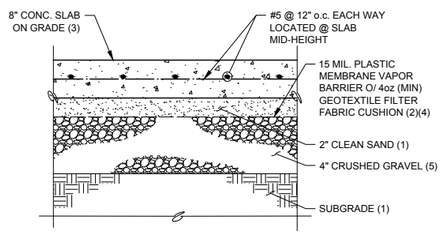

NOTES:
1. SUBGRADE SHALL BE PREPARED AS PER MINIMUM REQUIREMENTS OF THE PROJECT SOILS REPORT
2. SEE PROJECT SOILS REPORT
3. SEE DETAIL 03/05AS06 FOR SLAB CONTROL JOINT
4. CARE SHALL BE TAKEN TO PROPERLY SEAL AND LAP THE VAPOR BARRIER, AND TO AVOID PUNCTURING
5. ASTM C33, GRADE 67 CRUSHED, ANGULAR GRAVEL PER PROJECT SOILS REPORT

SLAB ON GRADE (6)

N.T.S.

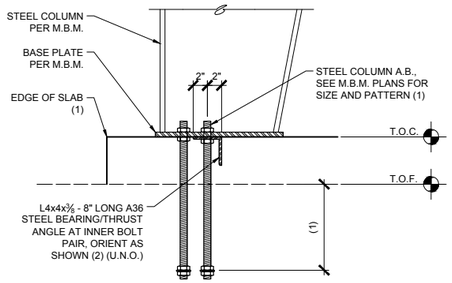

NOTES:
1. ANCHOR BOLTS SHALL BE EMBEDDED PER FOUNDATION PLAN NOTES
2. PROVIDE HEX NUT AT BASE OF THRUST ANGLE

BEARING/THRUST ANGLE (7)

N.T.S.

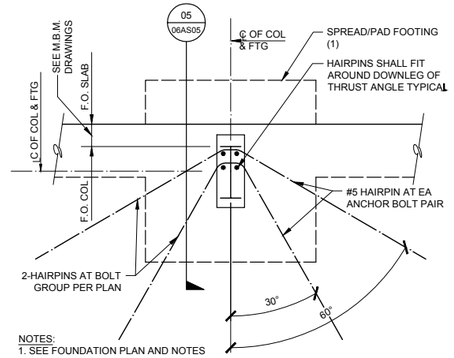

NOTES:
1. SEE FOUNDATION PLAN AND NOTES

FLARED HAIRPIN (8)

N.T.S.

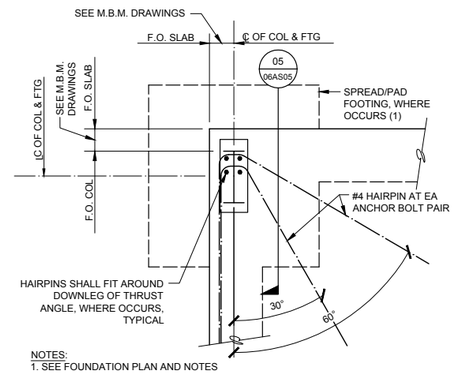

NOTES:
1. SEE FOUNDATION PLAN AND NOTES

FLARED HAIRPIN AT CORNER (9)

N.T.S.

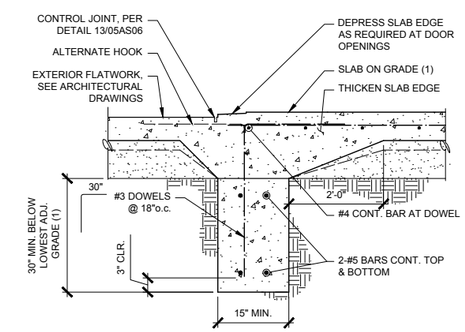

NOTES:
1. SEE FOUNDATION PLAN AND NOTES

FTG. AT ROLL-UP DOOR (10)

N.T.S.

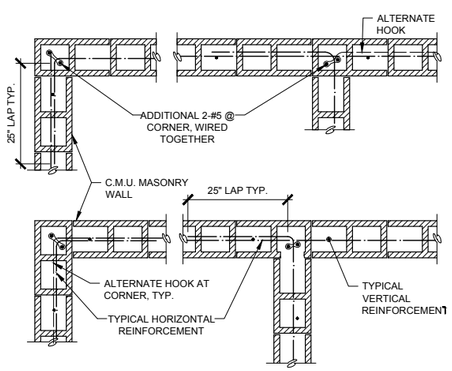

CMU CORNER (11)

N.T.S.

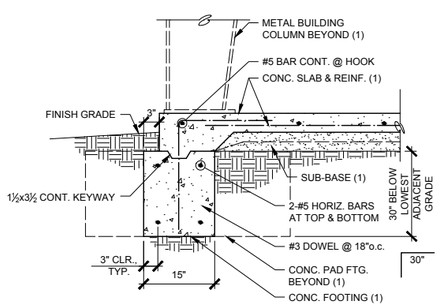

NOTES:
1. SEE FOUNDATION PLAN AND NOTES

PERIMETER FOOTING (12)

N.T.S.

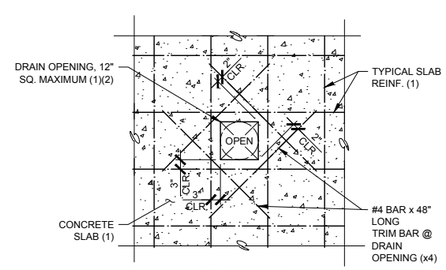

PLAN VIEW

NOTES:
1. SEE FOUNDATION PLAN AND NOTES
2. SEE ARCHITECTURAL PLANS

OPENING IN SLAB ON GRADE (13)

N.T.S.

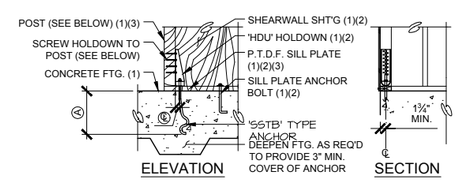

ELEVATION SECTION

HOLDOWN (4)	POST SCREWS(7)	MIN. POST WIDTH (5)	ANCHOR BOLT (4) DIAM.	Ⓐ	MODEL (6)	Ⓑ
HDU2	6	DBL. 2x	⅝"Ø	21"	SSTB24	1⅝"
HDU5	14	4x	⅝"Ø	21"	SSTB24	1⅝"
HDU8	20	4x	⅞"Ø	25"	SSTB34	1⅞"

NOTES:
1. SEE FRAMING/FOUNDATION PLAN AND NOTES
2. SEE SHEARWALL SCHEDULE AND NOTES
3. MEMBER TO RECEIVE SHEARWALL PLYWOOD EDGE NAILING, FULL LENGTH
4. SEE CURRENT EDITION OF THE SIMPSON 'STRONG-TIE' CATALOG
5. MINIMUM POST SIZE, UNLESS NOTED OTHERWISE ON THE FOUNDATION, FRM'G PLAN OR SHEARWALL SCHEDULE
6. WHERE 3x SILL PLATE IS USED, PROVIDE 'SSTBL' MODEL
7. USE SIMPSON SDS ¼" x 2½" WOOD SCREWS

'HDU' TYPE HOLDOWN (14)

N.T.S.

REV	DATE	BY	DESCRIPTION

DESIGNED JMM
DRAWN NWK
CHECKED MFS
DATE SEPTEMBER 2013

REGISTERED PROFESSIONAL ENGINEER MICHAEL F SHAW NO. 35410 CIVIL STATE OF CALIFORNIA

SMITH STRUCTURAL GROUP, LLP
811 El Capitan Way, Suite 240 | 805.439.2110
San Luis Obispo, CA 93401 | smithstructural.com

carollo

SAN LUIS OBISPO COUNTY

SAN LUIS OBISPO COUNTY
LOS OSOS WATER RECYCLING FACILITY PROJECT
STRUCTURAL
MAINTENANCE BUILDING
STRUCTURAL DETAILS

VERIFY SCALES
BAR IS ONE INCH ON ORIGINAL DRAWING
0 1"
IF NOT ONE INCH ON THIS SHEET, ADJUST SCALES ACCORDINGLY

JOB NO. 8930A.11
DRAWING NO. 06AS05
SHEET NO. XXX OF XXX

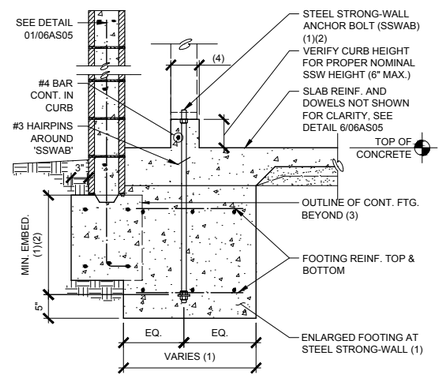

SECTION

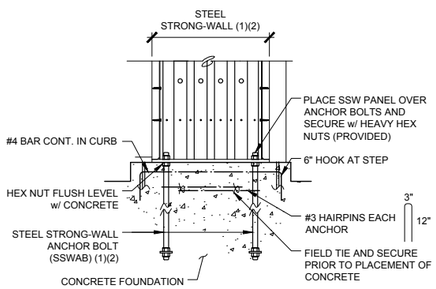

ELEVATION

NOTES:
1. SEE FRAMING/FOUNDATION PLAN AND NOTES
2. SEE 'STRONG-WALL' SCHEDULE AND NOTES
3. CONTINUE TYPICAL HORIZ. FOOTING REINF. THROUGH ENLARGED FOOTING
4. 6" MINIMUM FOR 12" AND 15" PANELS, 8" MINIMUM FOR 21" PANEL

STL. STRONG-WALL BASE (1)

N.T.S.

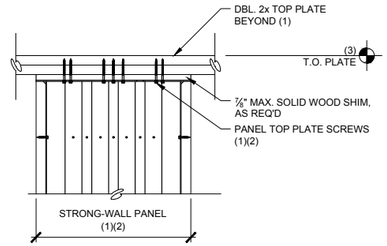

NOTES:
1. SEE FRAMING PLAN AND NOTES
2. SEE STRONGWALL SCHEDULE AND NOTES
3. VERIFY WITH ARCHITECTURAL DRAWINGS

TYP. STL. STRONG-WALL (2)

N.T.S.

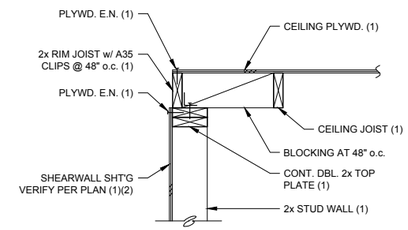

NOTES:
1. SEE FRAMING PLAN AND NOTES
2. SEE SHEARWALL SCHEDULE AND NOTES

CEILING JST. AT BRG. WALL (3)

N.T.S.

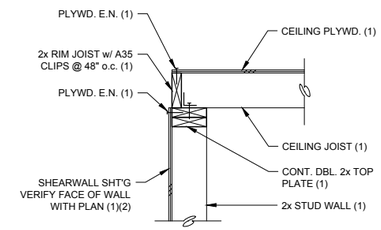

NOTES:
1. SEE FRAMING PLAN AND NOTES
2. SEE SHEARWALL SCHEDULE AND NOTES

CEILING JST. AT BRG. WALL (4)

N.T.S.

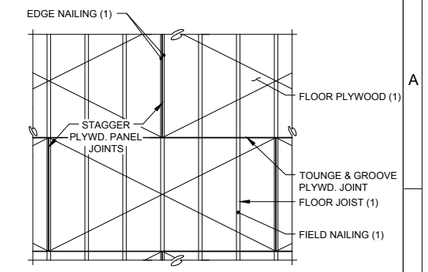

NOTES:
1. SEE FRAMING PLAN AND NOTES

PLYWOOD SHEATHING (5)

N.T.S.

REV	DATE	BY	DESCRIPTION

DESIGNED JMM
DRAWN NWK
CHECKED MFS
DATE SEPTEMBER 2013

REGISTERED PROFESSIONAL ENGINEER MICHAEL F. SMITH NO. 35410 CIVIL STATE OF CALIFORNIA

SMITH STRUCTURAL GROUP, LLP
811 El Capitan Way, Suite 240 | 805.439.2110
San Luis Obispo, CA 93401 | smithstructural.com

carollo®

SAN LUIS OBISPO COUNTY

SAN LUIS OBISPO COUNTY
LOS OSOS WATER RECYCLING FACILITY PROJECT
STRUCTURAL
MAINTENANCE BUILDING
STRUCTURAL DETAILS

VERIFY SCALES
BAR IS ONE INCH ON ORIGINAL DRAWING
0 1"
IF NOT ONE INCH ON THIS SHEET, ADJUST SCALES ACCORDINGLY

JOB NO. 8930A.11
DRAWING NO. 06AS06
SHEET NO. XXX OF XXX

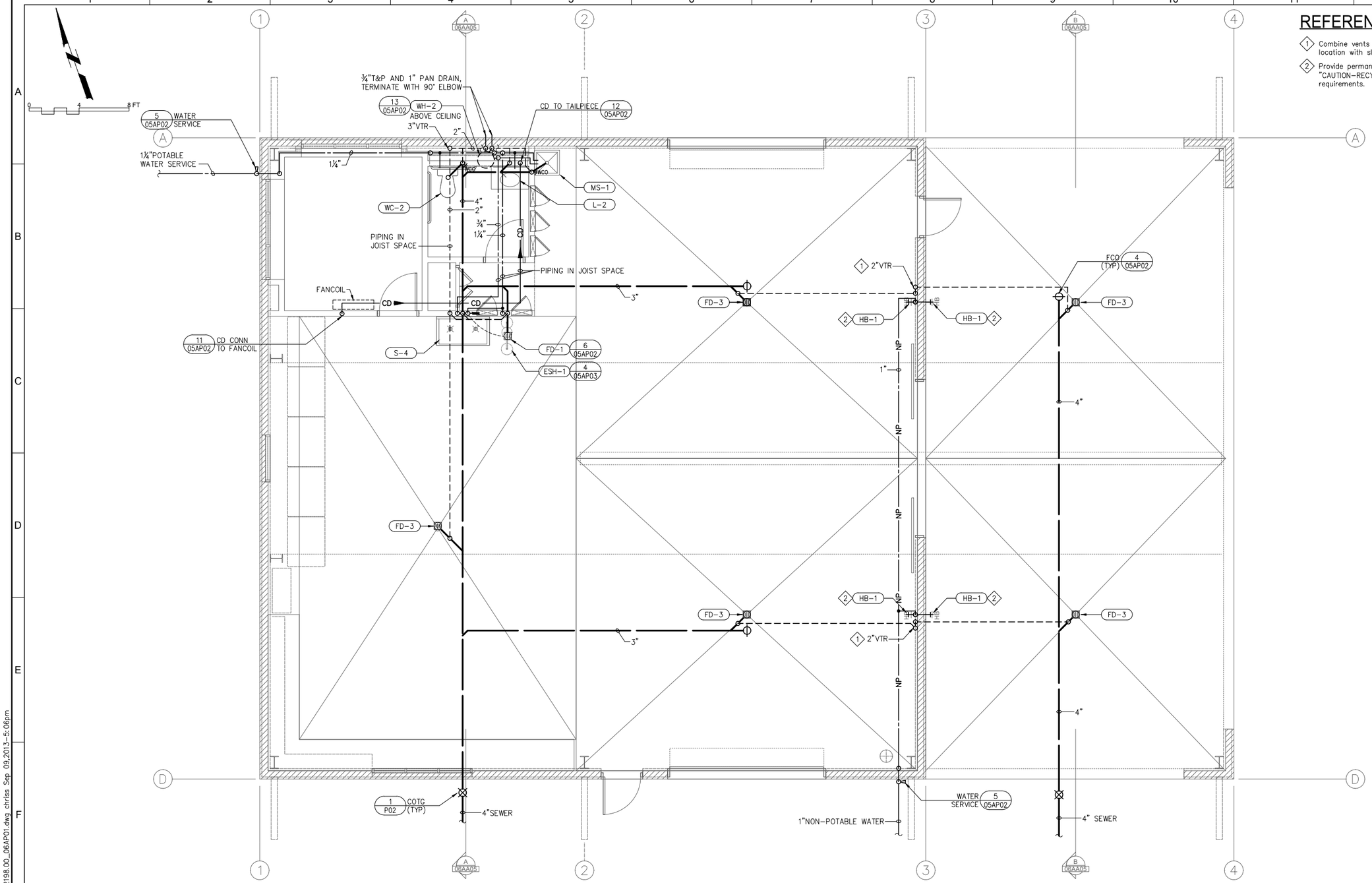

REFERENCE NOTES

1. Combine vents at floor and route up on wall through roof. Coordinate vent location with sliding doors.
2. Provide permanent engraved plaque above hose bibb that reads "CAUTION–RECYCLED WATER, DO NOT DRINK". Refer to detail M276 for sign requirements.

1 PLUMBING FLOOR PLAN - MAINTENANCE BUILDING

SCALE:1/4"=1'-0"

REV	DATE	BY	DESCRIPTION

DESIGNED LM
DRAWN DM
CHECKED LM
DATE SEPT 2013

REGISTERED PROFESSIONAL ENGINEER LINDON ROSS EXP. 6/30/15 MECHANICAL STATE OF CALIFORNIA

Brummel, Myrick & Associates
mechanical engineering
100 Cross Street, Suite 204
San Luis Obispo, CA 93401
OFF: (805) 544-4269
FAX:(805) 544-4335
BMA JOB #12198.00

carollo®

SAN LUIS OBISPO COUNTY

SAN LUIS OBISPO COUNTY
LOS OSOS WATER RECYCLING FACILITY PROJECT
PLUMBING
MAINTENANCE BUILDING
FLOOR PLAN

VERIFY SCALES
BAR IS ONE INCH ON ORIGINAL DRAWING
0 1"
IF NOT ONE INCH ON THIS SHEET, ADJUST SCALES ACCORDINGLY

JOB NO. 8930A.11
DRAWING NO. 06AP01
SHEET NO. XXX OF XXX

\\server1\data\Drawings\12\12198.00\plumb\12198.00_06AP01.dwg chriss Sep 09,2013-5:06pm

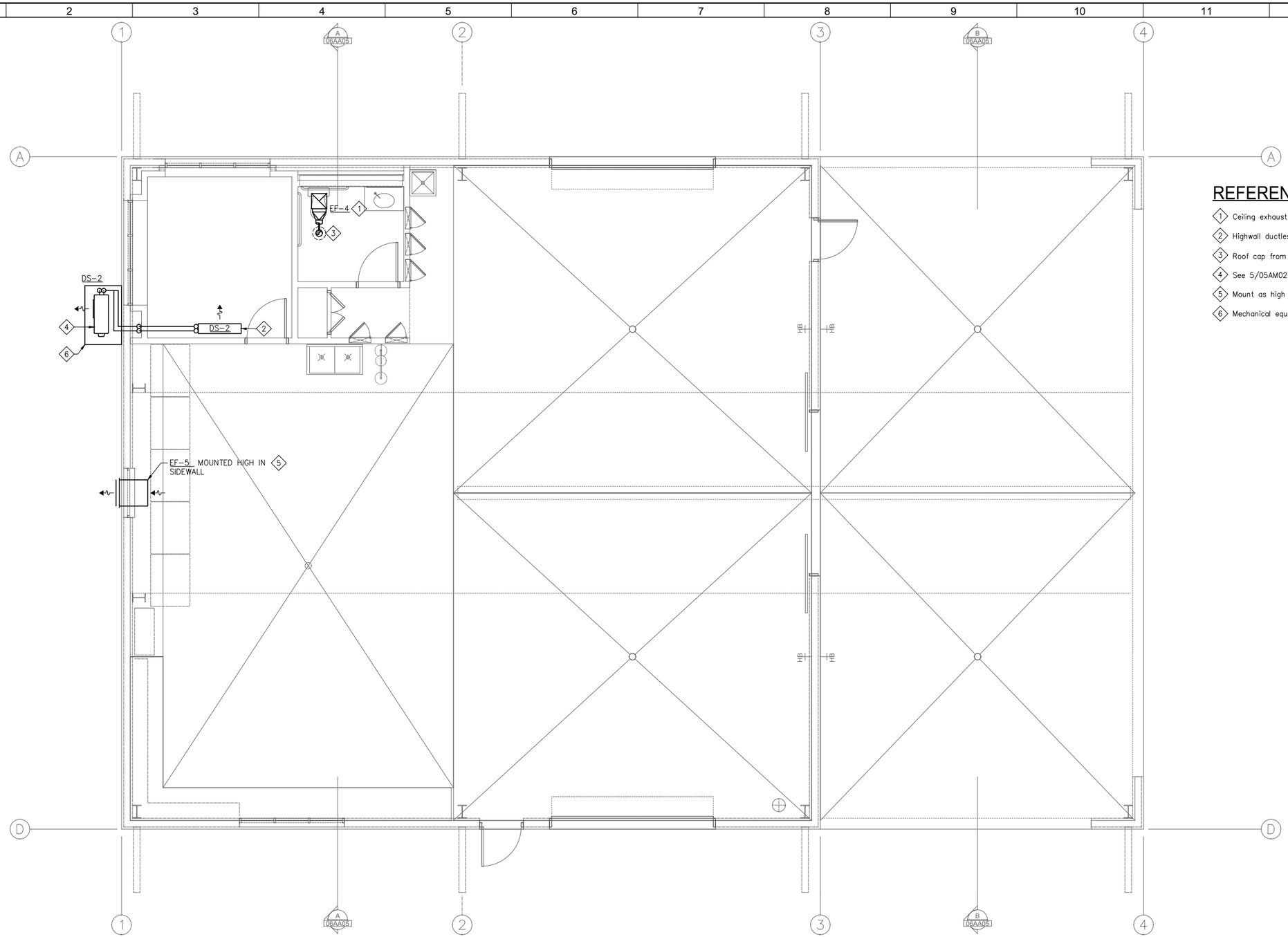

REFERENCE NOTES

1. Ceiling exhaust fan, see detail 8/05AM03.
2. Highwall ductless split heat pump, see detail 1/05AM03.
3. Roof cap from ceiling mounted exhaust fan. See 7/05AM03.
4. See 5/05AM02 for condenser mounting.
5. Mount as high as possible in wall per manufactures requirements.
6. Mechanical equipment concrete pad.

MECHANICAL FLOOR PLAN -MAINTENANCE BUILDING

SCALE:1/4"=1'-0"

REV	DATE	BY	DESCRIPTION

DESIGNED LM
DRAWN DM
CHECKED LM
DATE SEPT 2013

REGISTERED PROFESSIONAL ENGINEER MARTIN ROTHGERBER EXP 6/30/15 MECHANICAL STATE OF CALIFORNIA

Brummel, Myrick & Associates
mechanical engineering
100 Cross Street, Suite 204
San Luis Obispo, CA 93401
OFF: (805) 544-4269
FAX:(805) 544-4335
BMA JOB #12198.00

carollo

SAN LUIS OBISPO COUNTY

SAN LUIS OBISPO COUNTY

LOS OSOS WATER RECYCLING FACILITY PROJECT

MECHANICAL
MAINTENANCE BUILDING
FLOOR PLAN

VERIFY SCALES
BAR IS ONE INCH ON ORIGINAL DRAWING
0 1"
IF NOT ONE INCH ON THIS SHEET, ADJUST SCALES ACCORDINGLY

JOB NO. 8930A.11
DRAWING NO. 06AM01
SHEET NO. OF XXX

\\server1\data\Drawings\12\12198.00\mech\12198.00_06AM01.dwg devidm Sep 11,2013-2:23pm

GENERAL NOTES

1. CODE COMPLIANCE: ALL WORK SHALL CONFORM TO AND BE PERFORMED IN ACCORDANCE WITH CODES, STANDARDS, AND ORDINANCES AS SET FORTH BY THE AUTHORITIES HAVING JURISDICTION AND THEIR LATEST ADOPTED EDITIONS (IN EFFECT AT TIME OF BUILDING PERMIT APPLICATION) OF THE FOLLOWING PUBLICATIONS:

   A. CALIFORNIA CODE OF REGULATIONS TITLE 24; INCLUDES 2010 NATIONAL ELECTRICAL CODE, 2010 INTERNATIONAL FIRE CODE, 2010 INTERNATIONAL BUILDING CODE, ETC. WITH CALIFORNIA AND OTHER LOCAL AMENDMENTS AS APPLICABLE.

   B. AMERICANS WITH DISABILITIES ACT (ADA).

2. SAFETY: THE ELECTRICAL CONTRACTOR IS RESPONSIBLE TO MAINTAIN ALL EQUIPMENT IN A SAFE AND RESPONSIBLE MANNER. KEEP DEAD FRONT EQUIPMENT IN PLACE WHILE EQUIPMENT IS ENERGIZED. CONDUCT ALL CONSTRUCTION OPERATIONS IN A SAFE MANNER FOR EMPLOYEES AS WELL AS OTHER WORKPERSONS OR ANYONE VISITING THE JOB SITE. PROVIDE BARRIERS, FLAGS, TAPE, ETC. AS REQUIRED FOR SAFETY. THE CONTRACTOR SHALL HOLD ALL PARTIES HARMLESS OF NEGLIGENT SAFETY PRACTICES, WHICH MAY CAUSE INJURY TO OTHERS ON OR NEAR THE JOB SITE.

3. FIRE RATED ASSEMBLIES SHALL MAINTAIN RATINGS AS SPECIFIED IN THE CALIFORNIA BUILDING CODE CHAPTER 7. CONTRACTOR SHALL PROVIDE AND INSTALL PHYSICAL ENCLOSURE AROUND FIXTURES, PANELS, ETC. AS REQUIRED. ALL ASSEMBLIES TO BE PENETRATED SHALL BE INSTALLED WITH APPLICABLE THROUGH-PENETRATION FIRESTOP SYSTEM AS DETERMINED BY UL CLASSIFICATION. BEFORE CONSTRUCTION, VERIFY AND COMPLY WITH REQUIREMENTS OF LOCAL AUTHORITY HAVING JURISDICTION.

4. MOUNTING HEIGHTS SHALL BE AS FOLLOWS UNLESS OTHERWISE NOTED:

   +15" AFF: RECEPTACLES, TELEPHONE, TV & DATA OUTLETS. (MEASURED BOTTOM OF OUTLET BOX)
   +48" AFF: LIGHT SWITCHES. (MEASURED TOP OF OUTLET BOX)
   +48" AFF: FIRE ALARM MANUAL PULL STATIONS, T-STATS. (MEASURED TOP OF OUTLET BOX)
   THE LOWER OF +80" AFF TO BOTTOM OF LENS, OR 6" BELOW CEILING: FIRE ALARM VISUALS.

   ELECTRICAL SWITCHES: CONTROLS AND SWITCHES INTENDED TO BE USED BY THE OCCUPANT OF THE ROOM OR AREA TO CONTROL LIGHT AND RECEPTACLE OUTLETS, APPLIANCES OR COOLING, HEATING AND VENTILATING EQUIPMENT, SHALL BE LOCATED NO MORE THAN 48 INCHES MEASURED FROM THE TOP OF THE OUTLET BOX NOR LESS THAN 15 INCHES MEASURED FROM THE BOTTOM OF THE OUTLET BOX TO THE LEVEL OF THE FINISH FLOOR OR WORKING PLATFORM. [CBC 1117B.6, ITEM 5.1]

   ELECTRICAL RECEPTACLE OUTLETS: ELECTRICAL RECEPTACLE OUTLETS ON BRANCH CIRCUITS OF 30 AMPERES OR LESS AND COMMUNICATION SYSTEM RECEPTACLES SHALL BE LOCATED NO MORE THAN 48 INCHES MEASURED FROM THE TOP OF THE RECEPTACLE OUTLET BOX OR RECEPTACLE HOUSING NOR LESS THAN 15 INCHES MEASURED FROM THE BOTTOM OF THE RECEPTACLE OUTLET BOX OR RECEPTACLE HOUSING TO THE LEVEL OF THE FINISH FLOOR OR WORKING PLATFORM [CBC 1117B.6, ITEM 5.2]

   BEFORE ROUGH-IN, VERIFY ALL MOUNTING HEIGHTS AND EXACT LOCATIONS FOR ALL EQUIPMENT ELECTRICAL CONNECTIONS, STUB-UPS, RECEPTACLES, OUTLETS, ETC. WITH ARCHITECT OR OWNER. PLACE DEVICES LOCATED ABOVE COUNTERS, SHELVING, ETC. AND IN BATHROOMS SO AS NOT TO CONFLICT WITH EDGES OF WAINSCOTING, COUNTER SPLASH, SHELVING, ETC. ARCHITECTURAL SHEETS SHALL GOVERN.

5. LABEL PANELS, CABINETS, BACKBOARDS, MAIN DEVICES, SAFETY SWITCHES, CONTACTORS AND OTHER SPECIFICALLY DESIGNATED EQUIPMENT SHOWN ON PLANS. USE ENGRAVED LAMINATED PLASTIC NAMEPLATES ATTACHED BY SCREWS OR RIVETS. FOR FEEDERS, NEATLY AND INDELIBLY LABEL CONDUIT DESTINATIONS ON BOTH VISIBLE ENDS OF CONDUIT RUNS WHERE CONDUITS TERMINATE AT DESIGNATED ENCLOSURES, STRUCTURES OR EQUIPMENT (INCLUDING PULL AND SPLICE BOXES).

6. EQUIPMENT ANCHORAGE NOTE
   ALL MECHANICAL AND ELECTRICAL EQUIPMENT SHALL BE ANCHORED OR BRACED TO MEET THE HORIZONTAL AND VERTICAL FORCES PRESCRIBED IN THE 2010 CBC, SECTION 1615A.1.20 AND ASCE 7-05 SECTIONS 13.3, 13.4 & 13.6.

   THE ATTACHMENT OF THE FOLLOWING ITEMS SHALL BE DESIGNED TO RESIST THE FORCES PRESCRIBED ABOVE, BUT NEED NOT BE DETAILED ON THE PLANS:

   A. EQUIPMENT WEIGHING LESS THAN 400 POUNDS SUPPORTED DIRECTLY ON THE FLOOR OR ROOF.
   B. FURNITURE REQUIRED TO BE ATTACHED IN ACCORDANCE WITH PART 2, TITLE 24, C.C.R..
   C. TEMPORARY OR MOVABLE EQUIPMENT.
   D. EQUIPMENT WEIGHING LESS THAN 20 POUNDS SUPPORTED BY VIBRATION ISOLATORS.
   E. EQUIPMENT WEIGHING LESS THAN 20 POUNDS SUSPENDED FROM A ROOF OR FLOOR OR HUNG FROM A WALL.

   FOR THOSE ELEMENTS THAT DO NOT REQUIRE DETAILS ON THE APPROVED DRAWINGS, THE INSTALLATION SHALL BE SUBJECT TO THE APPROVAL OF THE MECHANICAL/ELECTRICAL ENGINEER AND THE FIELD REPRESENTATIVE OF THE DIVISION OF THE STATE ARCHITECT.

   PIPING, DUCTWORK, AND ELECTRICAL DISTRIBUTION SYSTEMS SHALL BE BRACED TO RESIST THE FORCES PRESCRIBED IN ASCE 7-05 SECTION 13.3 AS DEFINED IN ASCE 7-05 SECTION 13.6.8, 13.6.7, AND 13.6.5.5, ITEM 6, RESPECTIVELY.

   THE BRACING AND ATTACHMENTS TO THE STRUCTURE SHALL COMPLY WITH ONE OF THE OSHPD PRE-APPROVALS WITH AN OPA#, SUCH AS MASON INDUSTRIES (OPA 349), OR ISAT (OPA 485) AS MODIFIED TO SATISFY ANCHORAGE REQUIREMENTS OF ACI 318, APPENDIX D.

   COPIES OF THE MANUAL SHALL BE ON THE JOBSITE PRIOR TO STARTING HANGING AND BRACING OF THE PIPE, DUCTWORK, AND ELECTRICAL DISTRIBUTION SYSTEMS.

   THE STRUCTURAL ENGINEER OF RECORD SHALL VERIFY THE ADEQUACY OF THE STRUCTURE TO SUPPORT THE HANGER AND BRACE LOADS.

MECHANICAL SYSTEMS

1. MECHANICAL UNIT CONDUITS: TO PREVENT DAMAGE DUE TO VIBRATION, BOTH POWER AND CONTROL WIRING CONDUITS FEEDING EXTERIOR MECHANICAL UNITS SHALL BE PROVIDED AND INSTALLED BY ELECTRICAL CONTRACTOR WITH LIQUID TIGHT FLEXIBLE TYPE AT FINAL CONNECTION TO UNIT AND BETWEEN ROOF JACK AND DISCONNECT SWITCH WHERE DISCONNECT IS MOUNTED ON UNIT.

2. MECHANICAL CONTROLS ROUGH-IN: PROVIDE AND INSTALL J-BOX, RING AND CONDUIT (SIZE ALL AS REQUIRED) FROM EACH MECHANICAL CONTROLS LOCATION TO CONTROLLED MECHANICAL UNITS.

3. T-STAT J-BOXES: PROVIDE AND INSTALL 4" SQUARE JUNCTION BOX WITH 1-GANG RING AND 1/2" CONDUIT TO ACCESSIBLE CEILING SPACE ABOVE AT EACH THERMOSTAT LOCATION. REFER TO MECH PLANS FOR T'STAT LOCATIONS.

4. EXHAUST FANS SHALL BE PROVIDED & INSTALLED BY MECHANICAL CONTRACTOR WITH WIRING CONNECTIONS MADE BY ELECTRICAL CONTRACTOR.

5. MECHANICAL EQUIPMENT CONTROLS: MECHANICAL CONTRACTOR SHALL BE RESPONSIBLE FOR ALL LOW VOLTAGE WIRE AND CONNECTIONS (BELOW 120 VOLT) TO AND FROM ALL MECHANICAL CONTROL DEVICES. ALL LOW VOLTAGE CONTROL WIRE SHALL BE IN CONDUIT, UNLESS OTHERWISE NOTED.

6. PULLROPES: ANY RACEWAY WITHOUT CABLE OR WIRE SHALL BE INSTALLED WITH MINIMUM 200 POUND TEST PULL LINE AND LARGER IF REQUIRED BY SERVING UTILITY COMPANY. ANY NEW OR EXISTING COMMUNICATION OR SIGNAL RACEWAY ROUTED BETWEEN BUILDINGS, SIGNAL CABINETS, AND/OR SIGNAL CLOSETS WITH FUTURE CAPACITY SHALL BE INSTALLED WITH MINIMUM 200 POUND TEST PULL LINE AS WELL AS THE CALLED FOR CABLE.

AMERICAN RECOVERY AND REINVESTMENT ACT (ARRA)

1. ALL EQUIPMENT PROVIDED FOR THIS PROJECT SHALL COMPLY WITH THE REQUIREMENTS OF (ARRA)

LEGEND

NOTE: INTERPRET IN CONTEXT

LIGHT FIXTURES

- CEILING SURFACEMOUNT
- WALL SURFACEMOUNT
- PENDANT MOUNT
- RECESSED DOWNLIGHT
- RECESSED WALLWASH
- RECESSED FLUOR.
- SURFACE FLUOR.
- FLUOR. STRIP UON
- TRACK LIGHT
- DIRECTIONAL FLOOD
- EMERGENCY FIXTURE
- POLE LIGHT
- POLE LIGHT- DECORATIVE
- UPLIGHT- FLUSH IN GRADE
- BOLLARD
- TANDEM-WIRED LAMPS
- UNDERCABINET LIGHT
- WALL SURFACEMOUNT LINEAR TYPE
- PENDANT LINEAR FLUOR.
- RECESSED WALLMOUNT
- WALLPACK
- EXIT LIGHT- WALL
- EXIT LIGHT- CEILING (ARROW INDICATES DIRECTION)
- A LETTER ADJACENT INDICATES FIXTURE TYPE

SWITCHES

- $ SPST
- $2 DPST
- $3 3-WAY
- $4 4-WAY
- $D DIMMER
- $T TIMER SWITCH
- $T W/THERMAL OVERLOAD
- $P W/PILOT LIGHT
- $K KEY OPERATED
- $3 DUAL LEVEL SWITCHING
- (a) SWITCHLEG DESIGNATION
- OS OCCUPANCY SENSOR

POWER/COMM.

- SINGLE RECEPT.
- DUPLEX RECEPT.
- DUPLEX- HALF SWITCHED
- DOUBLE DUPLEX
- SPECIAL CONFIGURATION
- FLOORMOUNT 208V, 1ø RECEPT
- DUPLEX- FLOOR OUTLET
- GROUND FAULT CIRCUIT INTERRUPT
- MOUNTED ABOVE COUNTER
- JUNCTION BOX
- TELEPHONE OUTLET
- DATA OUTLET
- PHONE/DATA COMBO OUTLET
- MOUNTED ABOVE COUNTER
- TV TELEVISION OUTLET
- SAFETY DISCONNECT
- DROP CORD RECEPT
- ABOVE-CLGMOUNT J-BOX
- TV OUTLET-FLOORMOUNT
- TELEPHONE FLOOR OUTLET
- DATA FLOOR OUTLET
- PHONE/DATA COMBO FLOOR OUTLET

MISCELLANEOUS

- MOTOR
- THERMOSTAT
- CIRCUIT BREAKER
- FUSIBLE SWITCH
- GROUND
- PHASE
- CLOCK
- CS CLOCK/SPEAKER COMBINATION
- WALL MOUNTED CLOCK
- PUSHBUTTON
- FLUSHMOUNT PANEL
- SURFACEMOUNT PANEL
- FLUSHMOUNT CABINET
- SURFACEMOUNT CABINET
- K KEYPAD
- CR CARD READER
- SPD SURGE PROTECTION DEVICE

CONDUIT/WIRE

- NEW
- UNDERGROUND
- NEW POWER HOMERUN (3 HOTS & NEUT SHOWN)
- ISOLATED GROUND
- EXISTING TO REMAIN
- (E) POWER HOMERUN
- WIRE LINE- CONTINUES
- CONDUIT STUB (W/MARKER)
- VERTICAL CONDUIT RUN
- CONDUIT SEAL
- FLEXIBLE CONNECTION
- LOW VOLTAGE
- SURFACEMOUNT RACEWAY
- INDICATES LINE CONTINUES
- CORD W/PLUG

FIRE ALARM

- FIRE ALARM CONTROL PANEL
- RPS REMOTE POWER SUPPLY
- H HORN- AUDIBLE DEVICE
- V VISUAL- VISUAL DEVICE
- AV AUDIBLE/VISUAL
- F FLOW SWITCH
- T TAMPER SWITCH
- P MANUAL PULL STATION
- SD SMOKE DETECTOR
- SD D DUCT SMOKE DETECTOR
- H HEAT DETECTOR
- B BELL
- EOL END OF LINE RESISTOR
- C CHIME

CONVENTIONS

- X — NUMBERED SHEET NOTES: REFERS TO NOTES ON SAME SHEET AS REFERENCE
- 1 / – — DETAIL REFERENCE: –DETAIL DESIGNATION –SHEET NUMBER REFERENCE
- X — EQUIPMENT DESIGNATION

ABBREVIATIONS

A	AMPERE
AB	AMP BREAKER
ABAND	ABANDONED
ABV	ABOVE
AC	ALTERNATING CURRENT
AC-#	AIR CONDITIONER
ADJ	ADJACENT
AF	AMP FUSE, AMP FRAME
AFF	ABOVE FINISH FLOOR
AFG	ABOVE FINISH GRADE
AIC	AMPERES INTERRUPTING CAPACITY
AI	ALUMINUM
AS	AMP SWITCH RATING
ATS	AUTOMATIC TIME SWITCH
ATS	AUTOMATIC TRANSFER SWITCH
AV	AUDIBLE/AUDIO VISUAL
AWG	AMERICAN WIRE GAGE
BFG	BELOW FINISH GRADE
BIL	BASIC IMPULSE LEVEL
BLDG	BUILDING
C	CONDUIT
-C-	CATV CONDUIT
CAB'T	CABINET
CATV	CABLE TELEVISION
CB	CIRCUIT BREAKER, CODE BLUE
CBC	CA. BUILDING CODE
CEC	CA. ELECTRICAL CODE
	CA. ENERGY COMMISSION
CF	COMPACT FLUORESCENT
CFC	CALIFORNIA FIRE CODE
CLG	CEILING
CL	CENTER LINE
CKT	CIRCUIT
CNT'R	CONTRACTOR
C.O.	CONDUIT ONLY (W/PULLROPE)
COND	CONDUIT, CONDUCTOR
CR	CRITICAL BRANCH
CSFM	CALIFORNIA SFM
CT	CURRENT TRANSFORMER
Cu	COPPER
CU-#	CONDENSING UNIT
D	DEPTH
DC	DIRECT CURRENT
DF	DRINKING FOUNTAIN
DIA	DIAMETER
DISC	DISCONNECT
DIST	DISTRIBUTION
DPST	DOUBLE POLE SINGLE THROW
DW	DISHWASHER
EM	EMERGENCY
(E)	EXISTING
EA	EACH
EB	ELECTRONIC BALLAST
EC	ELECTRICAL CONTRACTOR
EC-#	EVAPORATIVE COOLER
EF-#	EXHAUST FAN
EL	EVENING LIGHT
ELEC	ELECTRICAL
EM	EMERG BATTERY BACKUP
EMB	EMERGENCY BALLAST
EMERG	EMERGENCY
EOL	END OF LINE
EQUIP'T	EQUIPMENT
ES	ENERGY SAVING
(EXN)	(E) IN (N) LOCATION
(EXR)	(E) TO BE (R)
EXT	EXTERIOR
F	FLUORESCENT
(F)	FUTURE
F-#	FURNACE
FA	FIRE ALARM
FACP	FIRE ALARM CONTROL PANEL
FAT	FIRE ALARM TERMINAL
FAU	FORCED AIR UNIT
FBO	FURNISHED BY OTHERS
FC-#	FAN COIL
FLA	FULL LOAD AMPS
FLR	FLOOR
FLUOR	FLUORESCENT
FS	FUSIBLE SWITCH
FVNR	FULL VOLTAGE NON-REVERSING
G	GROUNDING CONDUCTOR
GC	GENERAL CONTRACTOR
GD	GARBAGE DISPOSAL
GFCI	GROUND FAULT CIRCUIT INTERRUPTER
GFI	GROUND FAULT CIRCUIT INTERRUPTER
GND	GROUND
GRS	GALVANIZED RIGID STEEL
GWS	GANG WITH SWITCH
H	HEIGHT, HIGH
HACR	HEATING, AC & REFRIG
HID	HIGH INTENSITY DISCHARGE
HO	HIGH OUTPUT
HOA	HAND-OFF-AUTO
hp	HORSEPOWER
HPF	HIGH POWER FACTOR
HPS	HIGH PRESSURE SODIUM
IC	INTERCOM
ID	IDENTIFICATION
IF	INSIDE FROST
IG	ISOLATED GROUND
J-BOX	JUNCTION BOX
K	QUANTITY 1000
kVA	KILOVOLTAMPS
kW	KILOWATT
LC	LIGHTING CONTACTOR
LPS	LOW PRESSURE SODIUM
LRA	LOCKED ROTOR AMPS
LS	LIFE SAFETY BRANCH
LT	LIGHT
LTG	LIGHTING
LV	LOW VOLTAGE
MC	MECHANICAL CONTRACTOR
MCA	MINIMUM CKT AMPS
MCB	MAIN CIRCUIT BREAKER
MCTB	MAIN CATV TERMINAL BOARD
MCTC	MAIN CATV TERMINAL CABINET
MECH	MECHANICAL
MFR	MANUFACTURER
MFS	MAIN FUSIBLE SWITCH
MH	METAL HALIDE
MLO	MAIN LUGS ONLY
MOCP	MAXIMUM OCP
MSB	MAIN SWITCHBOARD
MT	MOUNT
MT HT	MOUNTING HEIGHT
MTS	MANUAL TRANSFER SWITCH
MTTB	MAIN TELEPHONE TERMINAL BOARD
MTTC	MAIN TELEPHONE TERMINAL CABINET
MW	MICROWAVE
N	NEUTRAL (GROUNDED CONDUCTOR)
(N)	NEW
N3R	NEMA 3R
NC	NORMALLY CLOSED
NEC	NATIONAL ELECTRICAL CODE
NEMA	NAT'L ELEC MANUFACTURER'S ASSOC
NIC	NOT IN CONTRACT
NL	NIGHT LIGHT
NO	NORMALLY OPEN
NPF	NORMAL POWER FACTOR
NTS	NOT TO SCALE
OC	ON CENTER
OCP	OVERCURRENT PROTECTION
OD	OUTSIDE DIAMETER
OH	OVERHEAD
OSA	OFFICE of the STATE ARCHITECT
OSHPD	OFFICE of STATEWIDE HEALTH PLANNING & DEVELOPMENT
OVLD	OVERLOAD
P	POLE
PA	PUBLIC ADDRESS
PB	PULLBOX
PC	PULL CHAIN
PC	PHOTOCELL
PC	PLUMBING CONTRACTOR
ph	PHASE
PNL	PANEL
POC	POINT OF CONNECTION
-PP-	POWER PRIMARY
-PS-	POWER SECONDARY
(R)	RELOCATE(D)
RECEPT	RECEPTACLE
REF	REFRIGERATOR
REQ'D	REQUIRED
RLA	RATED LOAD AMPS
RM	ROOM
RMC	RIGID METAL CONDUIT
RMV	REMOVE
RPLC	REPLACE
RS	RAPID START
SC	SIGNAL CABINET
SCC	SHORT CKT CURRENT
SFM	STATE FIRE MARSHAL
SHT	SHEET
SL	SLIMLINE, SWITCH LEG
SPEC	SPECIFICATION
SPST	SINGLE POLE SINGLE THROW
SQ	SQUARE
STR'G	STORAGE
SURF	SURFACE
SVC	SERVICE
SW	SWITCH
T	TRANSFORMER, TERMINAL
-T-	TELEPHONE CONDUIT
TBR	TO BE REMOVED
TC	TIME CLOCK
TEL	TELEPHONE
TELCO	TELEPHONE COMPANY
TS	TIME SWITCH
TSO	TIME SWITCH OVERRIDE
TSP	TWISTED SHIELDED PAIR
TTB	TELEPHONE TERMINAL BOARD
TTC	TELEPHONE TERMINAL CABINET
TX	TRANSFORMER
TYP	TYPICAL
TYP SIM	TYPICAL SIMILAR
UC	UNDERCABINET, UNDERCOUNTER
UG	UNDERGROUND
UGPS	UNDERGROUND PULL SECTION
UL	UNDERWRITERS LABORATORIES
UON	UNLESS OTHERWISE NOTED
USA	UG SVC ALERT 800-642-2444
V	VOLT
VA	VOLT AMPERES
VAC	VOLT ALTERNATING CURRENT
VHO	VERY HIGH OUTPUT
VOLT	VOLTAGE
VR	VANDAL-RESISTANT
W	WIDTH, WATT, WIRE
WH-#	WATER HEATER
WP	WEATHERPROOF (NEMA 3R)
XFMR	TRANSFORMER
+48	INDICATES MOUNTING HEIGHT AFF

REV	DATE	BY	DESCRIPTION

DESIGNED RP
DRAWN DM
CHECKED JD
DRAWN SEPT. 2013

REGISTERED PROFESSIONAL ENGINEER WILLIAM A. THOMA No. 10757 ELECTRICAL STATE OF CALIFORNIA
EXP. 06/30/15 REF. #13-8008

thoma ENGINEERING
THOMA ELECTRIC, INC.
P.O. Box 1167 – 3562 Empleo St.
San Luis Obispo, CA 93406
Phone: (805) 543-3850
Fax: (805) 543-3829
cad@thomaelec.com

carollo

SAN LUIS OBISPO COUNTY

SAN LUIS OBISPO COUNTY

LOS OSOS WATER RECYCLING FACILITY PROJECT

ELECTRICAL
MAINTENANCE BUILDING
GENERAL NOTES, LEGEND AND ABBREVIATIONS

VERIFY SCALES
BAR IS ONE INCH ON ORIGINAL DRAWING
0 — 1"
IF NOT ONE INCH ON THIS SHEET, ADJUST SCALES ACCORDINGLY

JOB NO. 8930A.11
DRAWING NO. 06AE01
SHEET NO. OF XX

K:\DWGS\13-8008\13-8008_06AE01.dwg – lynda – Sep 10, 2013 – 3:49pm

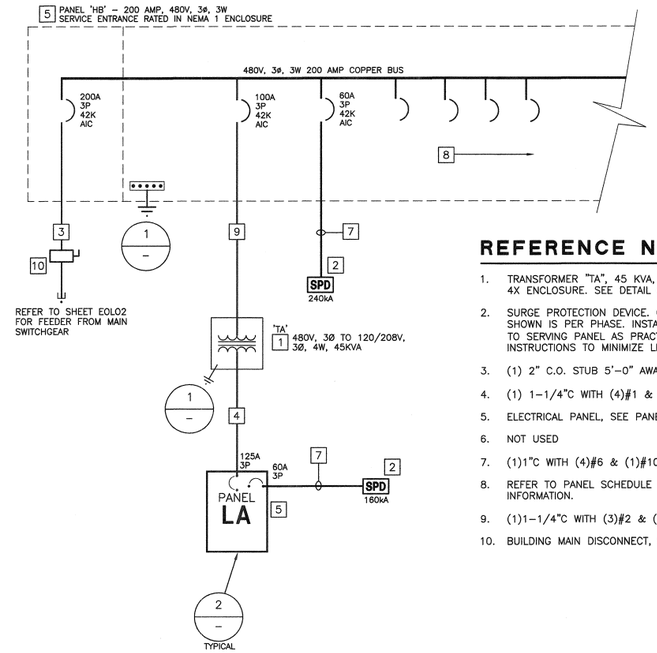

REFERENCE NOTES

1. TRANSFORMER "TA", 45 KVA, 480V 3Ø, TO 120/208V, 3ø, 4W, NEMA 4X ENCLOSURE. SEE DETAIL ON SHEET A6AE05 FOR MOUNTING.
2. SURGE PROTECTION DEVICE. CUTLER HAMMER SPD SERIES, RATING SHOWN IS PER PHASE. INSTALL IN FLUSH MOUNTED CABINET AS CLOSE TO SERVING PANEL AS PRACTICAL PER MANUFACTURER'S INSTALLATION INSTRUCTIONS TO MINIMIZE LEAD LENGTH. REFER TO SPECIFICATIONS.
3. (1) 2" C.O. STUB 5'–0" AWAY FROM BLDG.
4. (1) 1–1/4"C WITH (4)#1 & (1)#8 GND.
5. ELECTRICAL PANEL, SEE PANEL SCHEDULES.
6. NOT USED
7. (1)1"C WITH (4)#6 & (1)#10 GND.
8. REFER TO PANEL SCHEDULE FOR COMPLETE CIRCUIT BREAKER INFORMATION.
9. (1)1–1/4"C WITH (3)#2 & (1)#8 GND.
10. BUILDING MAIN DISCONNECT, SEE SHEET 06AE04.

GENERAL NOTES

- FOR SERIES RATED EQUIPMENT; IN ADDITION TO ALL FACTORY APPLIED, CODE REQUIRED MARKING AND SPECIFIED LABELING OF THE ELECTRICAL PANELBOARD AND THEIR COMPONENTS, ADDITIONAL MARKING AND LABELING IDENTIFYING THE SERIES RATED SYSTEM SHALL BE PROVIDED AS FOLLOWS:

  A. THE SERIES COMBINATION INTERRUPTING RATING, AS INDICATED ABOVE, SHALL BE MARKED ON THE EQUIPMENT BY THE MANUFACTURER AS REQUIRED BY NEC 240–83(C).

  B. WHEN USED, THE CONTRACTOR SHALL USE A "SERIES RATED SYSTEM" LABEL INDICATING SERIES RATING WARNINGS, COMPLYING WITH NEC 110–22 AND SHALL BE FURNISHED BY MANUFACTURER. THE LABEL SHALL BE PERMANENTLY AFFIXED TO THE INTERIOR OF PANELBOARD'S TRIM WHERE IT CAN BE READILY SEEN BY SERVICE PERSONNEL. THE COMPLETED LABEL SHALL READ:

  CAUTION!
  SERIES COMBINATION SYSTEM RATED SYSTEM [XX,XXX]A.
  IDENTIFIED REPLACEMENT COMPONENT REQUIRED.
  ANY ADDITIONS OR REPLACEMENTS SHALL BE WITH IDENTICAL COMPONENTS.
  FAILURE TO DO SO COULD RESULT IN ELECTRICAL EXPLOSION AND FIRE.

  SERIES RATINGS SHALL NOT BE USED WHERE MOTORS ARE CONNECTED ON THE LOAD SIDE OF THE HIGHER–RATED OVERCURRENT DEVICE AND ON THE LINE SIDE OF THE LOWER–RATED OVERCURRENT DEVICE, WHEN THE SUM OF THE MOTOR FULL–LOAD CURRENTS EXCEEDS 1 PERCENT OF THE INTERRUPTING RATING OF THE LOWER–RATED CIRCUIT BREAKER PER NEC 240–86(B).

- ALL CONDUCTORS SHALL BE COPPER WITH TYPE [THHN/THWN] INSULATION UNLESS OTHERWISE NOTED.
- ALL SWITCHES, CIRCUIT BREAKERS AND OTHER EQUIPMENT, AS SPECIFIED, SHALL HAVE TERMINATION PROVISIONS LISTED AND IDENTIFIED FOR USE WITH 75 DEG. CONDUCTORS, AND ALL FEEDER CONDUCTORS, AND CONDUITS, ARE SIZE BASED ON USE OF 75 DEG. C COPPER WIRES TYPE THWN/THHN.
- DESIGN SHOWN IS BASED ON CUTLER HAMMER PRODUCTS. ENGINEER–APPROVED EQUAL ALTERNATE PRODUCT WILL BE ACCEPTABLE.
- ALL EQUIPMENT SHALL HAVE AN APPROVED TESTING LABORATORY LABEL ATTACHED [UL, CSA, ETC.] (CEC 110–2).
- ALL EQUIPMENT PROVIDED FOR THIS PROJECT SHALL COMPLY WITH THE REQUIREMENTS OF (ARRA).

SINGLE LINE DIAGRAM

WARNING

POTENTIAL ARC FLASH HAZARD
Appropriate PPE and Tools Required when working on this equipment

"PPE" REFERS TO "PERSONAL PROTECTIVE EQUIPMENT".

NOTE:
IN ACCORDANCE WITH CEC 110.16, PROVIDE ARC FLASH PROTECTION WARNING LABELS ON EACH SWITCHBOARD, PANELBOARD, AND TRANSFORMER. LABELS SHALL BE PER ANSI Z535.4 GUIDELINES.

2 ARC FLASH SIGNAGE

NTS

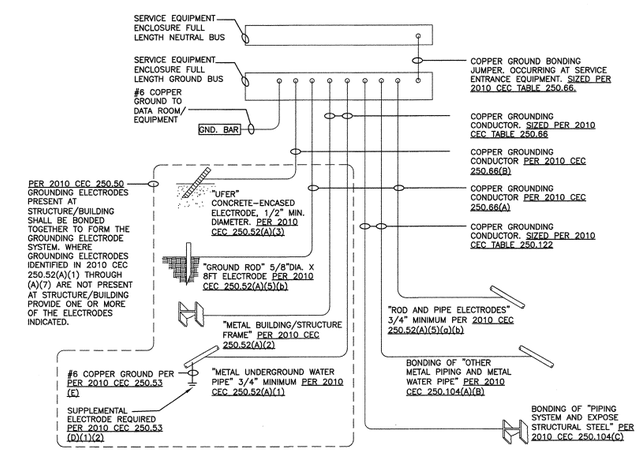

1 GROUND / BONDING DETAIL

NTS

REV	DATE	BY	DESCRIPTION

DESIGNED RP
DRAWN DM
CHECKED JD
DRAWN SEPT. 2013

REGISTERED PROFESSIONAL ENGINEER WILLIAM A. THOMA 10757 ELECTRICAL STATE OF CALIFORNIA
EXP. 06/30/15 REF. #13–8008

thoma ENGINEERING
THOMA ELECTRIC, INC.
P.O. Box 1167 – 3562 Empleo St.
San Luis Obispo, CA 93406
Phone: (805) 543–3850
Fax: (805) 543–3829
cad@thomaelec.com

carollo®

SAN LUIS OBISPO COUNTY

SAN LUIS OBISPO COUNTY
LOS OSOS WATER RECYCLING FACILITY PROJECT
ELECTRICAL
MAINTENANCE BUILDING
SINGLE LINE DIAGRAM

VERIFY SCALES
BAR IS ONE INCH ON ORIGINAL DRAWING
0 1"
IF NOT ONE INCH ON THIS SHEET, ADJUST SCALES ACCORDINGLY

JOB NO. 8930A.11
DRAWING NO. 06AE02
SHEET NO. OF XX

K:\DWGS\13–8008\13–8008_06AE02.dwg – lynda – Sep 10, 2013 – 3:49pm

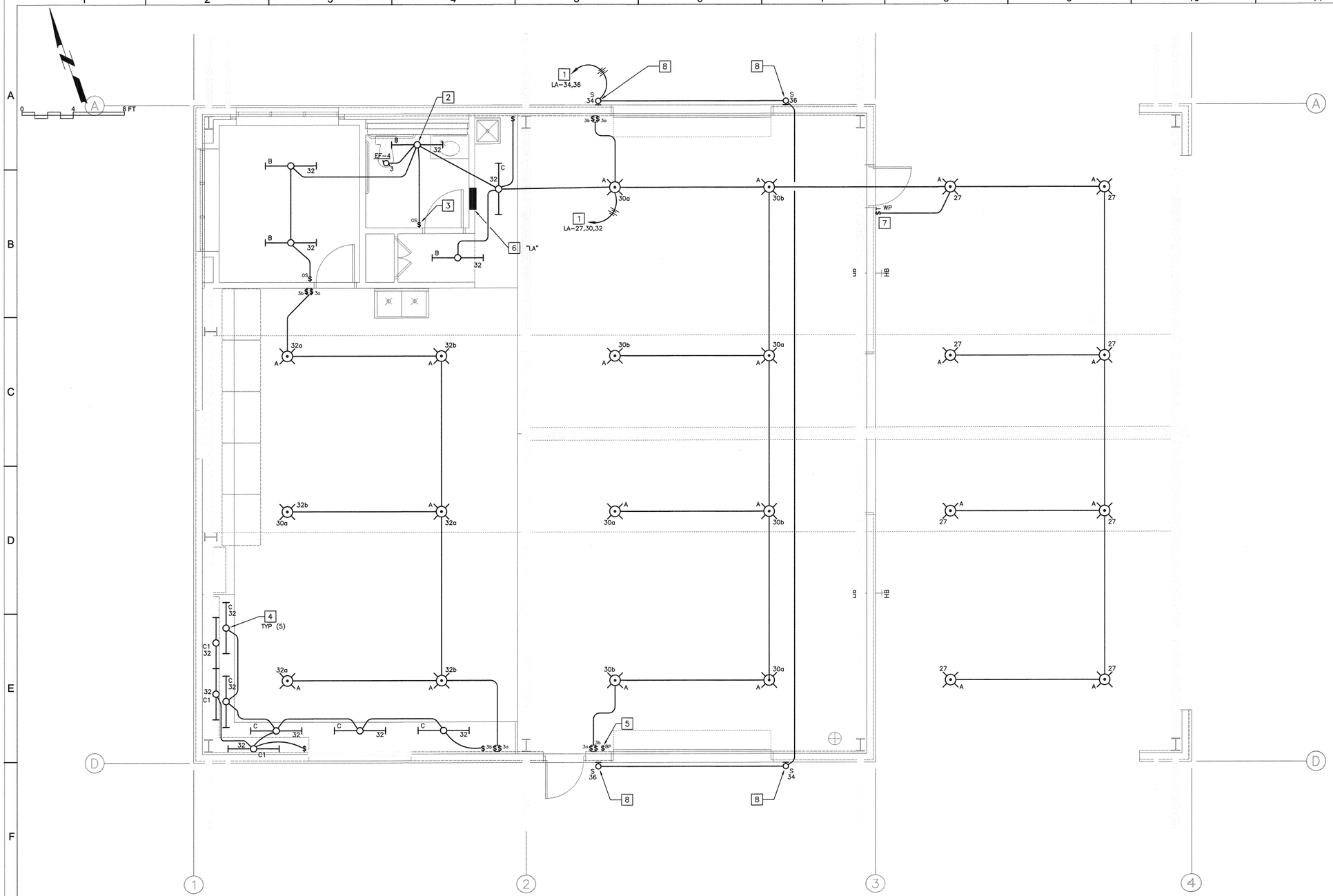

REFERENCE NOTES

1. ROUTE CIRCUIT THROUGH LIGHTING CONTROLS. SEE LIGHTING CONTROL DIAGRAM ON SHEET 06AE05.
2. MOUNT FIXTURE ABOVE LENSE, SEE ARCHITECTURAL PLANS FOR LENSE INFORMATION.
3. INTERLOCK EXHAUST FAN WITH LIGHT AND SWITCH. PROVIDE 5 MINUTE TIME DELAY OFF FOR EXHAUST FAN.
4. CHAIN HANG FIXTURES OVER WORK BENCH.
5. LIGHTING CONTROLS BY-PASS SWITCH, SEE LIGHTING CONTROL DIAGRAM ON SHEET 06AE05.
6. ELECTRICAL PANEL, SEE PANEL SCHEDULES.
7. 0 TO 4 HOUR ELECTRONIC TIME SWITCH.
8. SEE ARCHITECTURAL PLANS FOR FIXTURE MOUNTING HEIGHT.

GENERAL LIGHTING PLAN NOTES

- DUAL LEVEL SWITCHING: IN ROOMS 100 SQ. FT. OR LARGER, OR WHERE INDICATED ON PLANS.
- LIGHTING FIXTURE LOCATIONS SHOWN ARE SCHEMATIC. REFER TO ARCHITECTURAL PLANS (REFLECTED CEILING, ELEVATIONS, ETC.) FOR EXACT LOCATIONS AND MOUNTING HEIGHTS PRIOR TO ROUGH-IN.
- REFER TO ARCHITECT'S REFLECTED CEILING PLAN(S) FOR CEILING HEIGHTS, TYPES, FINISHES, ETC. IN EACH AREA. VERIFY FLANGE TYPES, TRIM KITS, STEM LENGTHS, ETC. FOR ALL FIXTURES PRIOR TO SUBMITTALS.
- CONFIRM LOCATION OF ALL DOORS SWINGS WITH ARCHITECTURAL PLANS PRIOR TO ROUGH-IN OF SWITCHES.

LIGHTING FLOOR PLAN

SCALE: 1/4"=1'-0"

NORTH

REV	DATE	BY	DESCRIPTION

DESIGNED RP
DRAWN DM
CHECKED JD
DRAWN SEPT. 2013

REGISTERED PROFESSIONAL ENGINEER WILLIAM A. THOMA NO. 10757 ELECTRICAL STATE OF CALIFORNIA
EXP. 06/30/15 REF. #13-8008

thoma ENGINEERING
THOMA ELECTRIC, INC.
P.O. Box 1167 - 3562 Empleo St.
San Luis Obispo, CA 93406
Phone: (805) 543-3850
Fax: (805) 543-3829
cad@thomaelec.com

carollo

SAN LUIS OBISPO COUNTY

SAN LUIS OBISPO COUNTY
LOS OSOS WATER RECYCLING FACILITY PROJECT
ELECTRICAL
MAINTENANCE BUILDING
LIGHTING FLOOR PLAN

VERIFY SCALES
BAR IS ONE INCH ON ORIGINAL DRAWING
0 1"
IF NOT ONE INCH ON THIS SHEET, ADJUST SCALES ACCORDINGLY

JOB NO. 8930A.11
DRAWING NO. 06AE03
SHEET NO. OF XX

K:\DWGS\13-8008\13-8008_06AE03.dwg - lynda - Sep 10, 2013 - 3:49pm

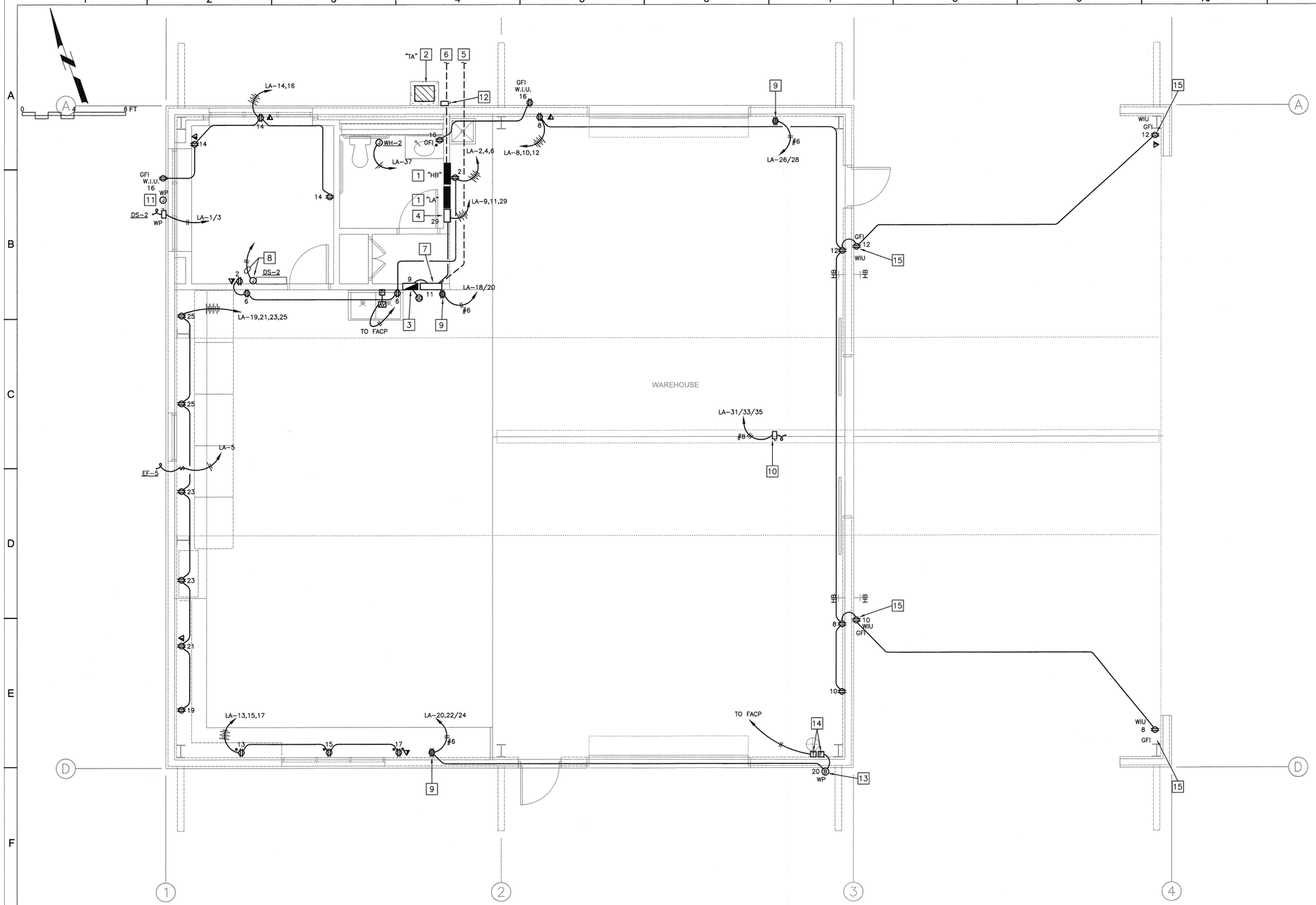

REFERENCE NOTES

1. ELECTRICAL PANEL, SEE SINGLE LINE DIAGRAM AND PANEL SCHEDULES.
2. TRANSFORMER "TA", SEE SINGLE LINE DIAGRAM. SEE MOUNTING DETAIL ON SHEET 06AE05.
3. FIRE ALARM CONTROL PANEL IN NEMA 1 ENCLOSURE, SEE FIRE ALARM RISER DIAGRAM ON SHEET 06AE05.
4. LIGHTING CONTROL CABINET IN NEMA 1 ENCLOSURE, SEE LIGHTING CONTROL DIAGRAM ON SHEET 06AE05.
5. LOW VOLTAGE SYSTEM CONDUITS(S). STUB 5'-0" AWAY FROM BUILDING LIMIT. REFER TO SHEET ESC10 FOR INFORMATION.
6. POWER DISTRIBUTION SYSTEM FEEDER, STUB 5'-0" AWAY FROM BUILDING LIMIT. REFER TO SHEET EOL02 FOR INFORMATION.
7. FLUSH MOUNTED 24"SQ. x 6" DEEP, NEMA 1. LOW VOLTAGE SYSTEM TERMINATION CABINET. PROVIDE DEDICATED 120V RECEPTACLE AND GROUND BUS BAR INSIDE CABINET, SEE DETAIL 4/06AE05.
8. PROVIDE CONDUIT AND CONDUCTORS FOR LINE VOLTAGE CONNECTION FROM DS-2 INDOOR UNIT.
9. 50A, 208V OUTLET VERIFY NEMA CONFIGURATION WITH OWNER PRIOR TO INSTALLATION.
10. 60AMP FDS WITH FLEXIBLE CONNECTION TO MONORAIL SYSTEM., FUSE DISCONNECT SWITCH AS PER MONORAIL INSTALLATION RECOMMENDATIONS.
11. PROVIDE J-BOX WITH 1/2" C.O. TO HVAC UNIT CONTROL LOCATION FOR LV WIRING BY OTHERS, REFER TO MECHANICAL PLANS FOR CONTROL LOCATIONS.
12. NEMA 3R BUILDING MAIN DISCONNECT.
13. PROVIDE 120V CONNECTION TO FIRE SPRINKLER BELL.
14. FIRE SPRINKLER RISER FLOW AND TAMPER SWITCHES.
15. PROVIDE RECEPTACLE WITH COOPER WIU SERIES STEEL WHILE IN USE TYPE COVER.

GENERAL POWER/ COMMUNICATIONS PLAN NOTES

- SIGNAL AND COMMUNICATIONS SYSTEMS RACEWAYS AND BOXES: PROVIDE AND INSTALL 4" SQUARE RECESSED JUNCTION BOX WITH 1-GANG RING AND (1) 1" CONDUIT TO LOW VOLTAGE SYSTEM TERMINATION CABINET AT EACH WALL TELEPHONE (VOICE), TELEVISION AND DATA OUTLET LOCATION SHOWN ON THE PLANS UNLESS OTHERWISE NOTED.

  BEFORE CONSTRUCTION, COORDINATE AND VERIFY ALL DATA AND TELEPHONE LOCATIONS WITH OWNER OR ARCHITECT.
- DEVICE LOCATIONS SHOWN ARE SCHEMATIC AND APPROXIMATE. EXACT LOCATIONS SHALL BE FIELD VERIFIED DURING ROUGH-IN WITH ARCHITECTURAL ELEVATIONS, CASEWORK SHOP DRAWINGS, FURNITURE, ETC. AND SHALL BE COORDINATED WITH OTHER TRADES TO AVOID CONFLICT WITH OTHER EQUIPMENT.
- FUSING: ALL FUSIBLE SAFETY DISCONNECT SWITCHES SHALL BE PROVIDED WITH DUAL-ELEMENT TIME DELAY TYPE FUSES SIZED AND RATED PER EQUIPMENT MANUFACTURERS' RECOMMENDATIONS. VERIFY WITH EQUIPMENT NAMEPLATE BEFORE INSTALLATION.
- INSTALL SEPARATE NEUTRALS FOR EACH BRANCH CIRCUIT.
- MOTOR OVERLOAD PROTECTION: WHERE REQUIRED BY NEC ARTICLE 430 PART C AND NOT SHOWN ON PLAN OR PROVIDED INTEGRAL WITH EQUIPMENT, PROVIDE AND INSTALL THERMAL OVERLOAD PROTECTION FOR ALL MOTORS.
- DEVICE LOCATIONS SHOWN ARE SCHEMATIC AND APPROXIMATE. EXACT LOCATIONS SHALL BE FIELD VERIFIED DURING ROUGH-IN WITH ARCHITECTURAL ELEVATIONS, CASEWORK SHOP DRAWINGS, FURNITURE, ETC. AND SHALL BE COORDINATED WITH OTHER TRADES TO AVOID CONFLICT WITH OTHER EQUIPMENT.
- ELECTRICAL AND COMMUNICATIONS OUTLETS SHOWN IN THE SAME LOCATION, SHALL BE MOUNTED ON OPPOSITE SIDES OF THE SAME STUD. COORDINATE BETWEEN ELECTRICAL AND COMMUNICATIONS PLANS.

POWER/COMMUNICATIONS FLOOR PLAN

NORTH

SCALE: 1/4"=1'-0"

REV	DATE	BY	DESCRIPTION

DESIGNED RP
DRAWN DM
CHECKED JD
DRAWN SEPT. 2013

REGISTERED PROFESSIONAL ENGINEER WILLIAM A. THOMA No. 10757 ELECTRICAL STATE OF CALIFORNIA
EXP. 06/30/15 REF. #13-8008

thoma ENGINEERING
THOMA ELECTRIC, INC.
P.O. Box 1167 - 3562 Empleo St.
San Luis Obispo, CA 93406
Phone: (805) 543-3850
Fax: (805) 543-3829
cad@thomaelec.com

carollo

SAN LUIS OBISPO COUNTY

SAN LUIS OBISPO COUNTY
LOS OSOS WATER RECYCLING FACILITY PROJECT
ELECTRICAL
MAINTENANCE BUILDING
POWER/COMMUNICATIONS FLOOR PLAN

VERIFY SCALES
BAR IS ONE INCH ON ORIGINAL DRAWING
0 1"
IF NOT ONE INCH ON THIS SHEET, ADJUST SCALES ACCORDINGLY

JOB NO. 8930A.11
DRAWING NO. 06AE04
SHEET NO. OF XX

K:\DWGS\13-8008\13-8008_06AE04.dwg - lynda - Sep 10, 2013 - 3:49pm

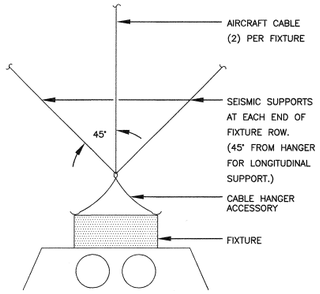

6 TYPICAL CABLE MOUNTED FIXTURE DETAIL

NTS

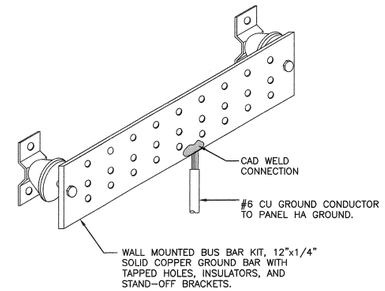

4 TYPICAL GROUND BUS BAR DETAIL

NTS

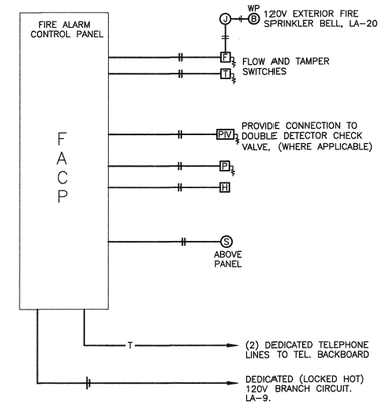

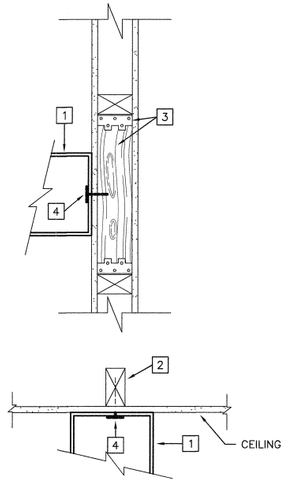

REFERENCE NOTES

1. SMALL SURFACE MOUNTED LIGHT FIXTURE (20 LBS OR LESS).
2. FRAMING ABOVE OR BLOCKING WITH A35 CLIP AT EACH END.
3. PROVIDE 3x6 BLOCKING WITH A35 CLIP AT EACH END WHERE VERTICAL STUD IS NOT AVAILABLE FOR ATTACHMENT.
4. ATTACH WITH #8x1-1/2" WOOD SCREW AND 1/2" DIAMETER WASHER. (2) REQUIRED PER FIXTURE.

1 TYPICAL WALL / SURFACE MOUNTED LIGHT FIXTURE MOUNTING DETAIL

NTS

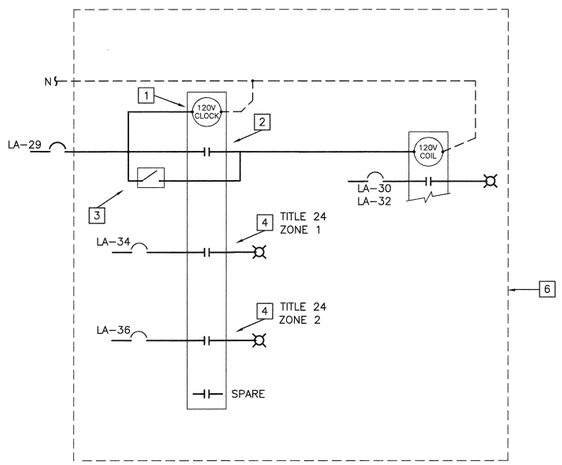

REFERENCE NOTES

1. INTERMATIC #ET-70415C 4 POLE PROGRAMMABLE TIME SWITCH PER CALIFORNIA ENERGY CODE (CEC) 119(c). MOUNT IN ENCLOSURE ABOVE PANEL LA.
2. PROGRAM CHANNEL TO TURN OFF ALL NON EMERGENCY LIGHTING DURING NON-OPERABLE HOURS AS DIRECTED BY OWNER. PROVIDE LIGHTING CONTACTOR(S) FOR INTERIOR LIGHTING BRANCH CIRCUIT(S) AS SHOWN.
3. INTERMATIC #FF-2H 2-HOUR SPRING WOUND TIMER SWITCH. LABEL "LIGHTING CONTROLS BY-PASS". (SEE FLOOR PLAN FOR LOCATIONS)
4. PROGRAM CHANNEL "ON" AT DUSK, "OFF" LATE EVENING AS SPECIFIED BY THE OWNER FOR BUILDING MOUNTED EXTERIOR LIGHTING CIRCUIT AS SHOWN.
5. PROVIDE HOT LEG OF BRANCH CIRCUIT TO EMERGENCY BATTERY PACKS, (ASS APPLICABLE).
6. PROVIDE FLUSH MOUNTED NEMA 1 ENCLOSURE ABOVE PANEL LA, SIZE AS REQUIRED, LABEL 'BLDG LIGHTING CONTROLS'.

7 BUILDING LIGHTING CONTROLS DIAGRAM

NTS

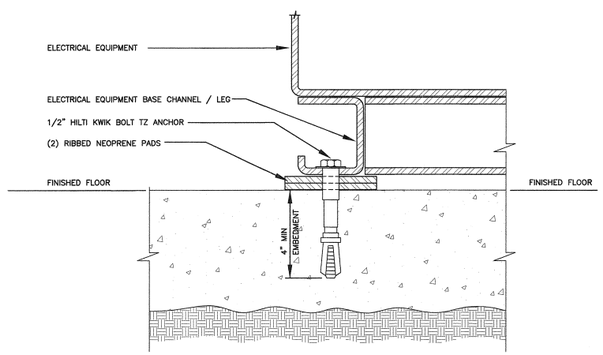

NOTES:
1. INSTALL ANCHORS AT 24" O.C. AROUND ENTIRE PERIMETER OF EQUIPMENT, WHERE APPLICABLE.

5 TYPICAL TRANSFORMER MOUNTING DETAIL

NTS

DEFERRED FIRE ALARM SYSTEM PERFORMANCE SPECIFICATION NOTES

1. PROVIDE ALL WORK AND MATERIAL REQUIRED FOR A COMPLETE AND OPERATING FIRE ALARM SYSTEM. WORK SHALL INCLUDE (BUT NOT BE LIMITED TO):
   A. SYSTEM DESIGN.
   B. SUBMITTAL FOR APPROVAL.
   C. COMPLETE INSTALLATION AND TESTING.
   D. SYSTEM TRAINING FOR OWNER'S REPRESENTATIVE.
   E. WARRANTY.
2. FIRE ALARM CONTROL PANEL SHALL BE ADDRESSABLE, APPROVED MANUFACTURERS ARE FCI/GAMEWELL, AND SILENT KNIGHT . PROVIDE WITH DIALER (DACT) AND CONNECT TO COMMUNICATIONS SYSTEM AS REQUIRED TO SEND THREE SEPARATE AND DISTINCT SIGNALS BEING WATERFLOW, TAMPER AND TROUBLE TO AN APPROVED CENTRAL STATION. FIRE SPRINKLER RISER WATERFLOW AND/OR VALVE TAMPER SWITCHES SHALL BE PROVIDED AND INSTALLED BY THE SPRINKLER SYSTEM CONTRACTOR, AND WIRED BACK TO THE FACP BY THE FIRE ALARM CONTRACTOR. COORDINATE FOR PROPER VOLTAGE. ALL FIRE ALARM COMPONENTS SHALL BE CALIFORNIA STATE FIRE MARSHAL LISTED.
3. SUBMIT DETAILED FIRE ALARM PLANS, SPECIFICATIONS AND ENGINEERING CALCULATIONS INCLUDING, BUT NOT NECESSARILY LIMITED TO:
   A. CSFM LISTING NUMBERS AND MANUFACTURER MODEL NUMBERS FOR EVERY SYSTEM COMPONENT, WHICH IS TO BE INTERCONNECTED AS PART OF THIS PROJECT.
   B. SINGLE LINE, RISER AND POINT TO POINT WIRING DIAGRAMS INCLUDING BATTERY AND VOLTAGE DROP CALCULATIONS FOR THE ENTIRE SYSTEM.
   C. INDICATION OF CONDUCTOR TYPE(S) AND SIZES, POWER LIMITED OR NON-POWER LIMITED SYSTEM.
   D. SCALED ELEVATION OF REMOTE GRAPHIC ANNUNCIATOR PANEL AT ENTRY.
   E. LIST OF PROPOSED ZONES FOR ALL INITIATING DEVICES.
   F. MATRIX OF SYSTEM OPERATION.
   G. INFORMATION AS REQUIRED TO DEMONSTRATE COMPLIANCE WITH APPLICABLE CODE(S) AND GAIN APPROVAL OF AUTHORITY(IES) HAVING JURISDICTION.
4. FIRE ALARM SYSTEM INSTALLATION SHALL NOT BEGIN UNTIL SEPARATE PERMIT HAS BEEN OBTAINED AND ALL OF THE ABOVE HAS BEEN ACCEPTED AND SIGNED BY THE AUTHORITY(IES) HAVING JURISDICTION. AFTER CONSTRUCTION, PROVIDE ACCURATE FIELD RECORD DRAWINGS TO OWNER.

3 FIRE ALARM RISER DIAGRAM

NTS

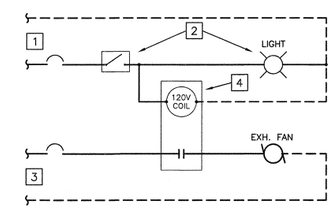

REFERENCE NOTES

1. 277 VOLT LIGHTING BRANCH CIRCUIT.
2. ROOM LIGHT/SWITCH OCCUPANCY SENSOR WITH 5 MINUTE TIME DELAY FOR FAN.
3. 120 VOLT EXHAUST FAN BRANCH CIRCUIT.
4. CONTROL RELAY (IN NEMA 1 ENCLOSURE) MOUNTED IN ACCESSIBLE CEILING SPACE.

2 EXHAUST FAN / RESTROOM LIGHT INTERLOCK DIAGRAM

NTS

REV	DATE	BY	DESCRIPTION

DESIGNED RP
DRAWN DM
CHECKED JD
DRAWN SEPT. 2013

REGISTERED PROFESSIONAL ENGINEER WILLIAM A. THOMA NO. 10757 ELECTRICAL STATE OF CALIFORNIA
EXP. 06/30/15 REF. #13-8008

thoma ENGINEERING
THOMA ELECTRIC, INC.
P.O. Box 1167 - 3562 Empleo St.
San Luis Obispo, CA 93406
Phone: (805) 543-3850
Fax: (805) 543-3829
cad@thomaelec.com

carollo

SAN LUIS OBISPO COUNTY

SAN LUIS OBISPO COUNTY
LOS OSOS WATER RECYCLING FACILITY PROJECT
ELECTRICAL
MAINTENANCE BUILDING
ELECTRICAL DETAILS

VERIFY SCALES
BAR IS ONE INCH ON ORIGINAL DRAWING
0 1"
IF NOT ONE INCH ON THIS SHEET, ADJUST SCALES ACCORDINGLY

JOB NO. 8930A.11
DRAWING NO. 06AE05
SHEET NO. OF XX

K:\DWGS\13-8008\13-8008_06AE05.dwg - lynda - Sep 10, 2013 - 3:49pm

LUMINAIRE SCHEDULE

TYPE	ILLUSTRATION	MANUFACTURER	CATALOG NO.	VOLTAGE	MAX. VA.	LAMPING	MOUNTING	DESCRIPTION
A		APPELTON	ADILE077-BU	120	127	LED	CHAIN	CHAIN MOUNTED LED HIGH BAY FIXTURE WITH SYMMETRICAL DISTRIBUTION. 15' OVERALL MOUNTING HEIGHT.
B		LITHONIA	2L2-L48-2300L-MVOLT	120	32	LED	SURFACE	4' LED STRIP LIGHT MOUNTED ABOVE LENSE.
C		LITHONIA	PTNSL4-WD-MVOLT	120	47	LED	CHAIN	4' CHAIN MOUNTED LED STRIP LIGHT.
C1		LITHONIA	2L2-L48-2300L-MVOLT	120	32	LED	UNDER CABINET	4' LED UNDERCOUNTER FIXTURE
S		LITHONIA	AUCLED-20L30K-48-120	120	20	LED	WALL	WALL MOUNTED LED FLOOD LIGHT FIXTURE WITH ASYMMETRIC DISTRIBUTION.

LIGHTING FIXTURE SCHEDULE NOTES

- ILLUSTRATIONS AND/OR DIMENSIONS ARE APPROXIMATIONS ONLY INTENDED TO REPRESENT BASIC FIXTURE TYPE; DO NOT USE AS EXACT INFORMATION SOURCE. REFER TO MANUFACTURER CUT SHEETS.
- EXACT LOCATIONS: BEFORE CONSTRUCTION, VERIFY WITH ARCHITECT EXACT LOCATIONS AND MOUNTING HEIGHTS OF ALL LIGHT FIXTURES. SEE ARCHITECTURAL REFLECTED CEILING PLANS AND ELEVATIONS AS APPLICABLE.
- FIXTURE BRANCH CIRCUIT THROUGH-WIRING: VERIFY AND COMPLY WITH FIXTURE MANUFACTURER RESTRICTIONS AS DETERMINED BY UL. & NEC.
- VERIFY CEILING TYPES/FINISHES FOR ALL RECESSED FIXTURES PRIOR TO FORWARDING SUBMITTALS.
- ALL FLAT PRISMATIC LENSES IN FLUORESCENT FIXTURES SHALL BE MINIMUM .125" THICK.
- BALLASTS AND LAMPS SHALL BE COMPATIBLE FOR THE APPLICATION IN WHICH THEY ARE BEING USED FOR THIS PROJECT. EACH BALLAST SHALL BE COMPATIBLE WITH THE CONTROL DEVICES USED FOR THIS JOB. BALLASTS NOT RECOMMENDED FOR USE WITH CONTROL DEVICES SHALL NOT BE USED AND THE APPROPRIATE BALLAST SHALL BE USED.
- ALL EQUIPMENT PROVIDED FOR THIS PROJECT SHALL COMPLY WITH THE REQUIREMENTS OF (ARRA).
- ALL LIGHTING FIXTURES SHALL MEET COUNTY DESIGN STANDARDS. THIS SHALL INCLUDE PROPER SHIELDING, PROPER ORIENTATION, AND APPLICABLE HEIGHT STANDARDS. ALL LIGHTING FIXTURES SHALL BE SHIELDED SO THAT NEITHER THE LAMP NOR THE RELATED REFLECTOR INTERIOR SURFACE IS VISIBLE FROM ADJACENT PROPERTIES OF PUBLIC AREAS. LIGHT HOODS SHALL BE DARK COLORED. LIGHTING ASSOCIATED WITH ALL PROJECT COMPONENTS SHALL BE THE MINIMUM NEEDED FOR PUMP STATION OPERATIONS WHICH REQUIRE LIGHTING FOR OPERATIONS AND/OR DURING EMERGENCY SITUATIONS. LIGHTING FIXTURE SUBMITTALS SHALL PROVIDE CONFIRMATION OF COMPLIANCE WITH THESE REQUIREMANTS.

PANEL LA

200A, 120/208V, 3Ø, 4W
42 FULL SIZE BOLT ON CB SPACES
42K AIC PANEL & BRANCH CB'S
WITH 125A MCB

FLUSH MOUNT, NEMA 1
LOCATION: WAREHOUSE
WITH EQUIP'T GND BUS

SEE NOTE	CKT #	DESCRIPTION	AMP CB / # POLE	WIRE SIZE	PHASE A VA	PHASE B VA	PHASE C VA	WIRE SIZE	AMP CB / # POLE	DESCRIPTION	CKT #	SEE NOTE
	1	DS-2	20 / 1	12	500			12	20 / 1	WAREHOUSE RECEPTACLES	2	
					720							
	3	DS-2	/ 2	12		500		12	20 / 1	WAREHOUSE RECEPTACLES	4	
						720						
3	5	EF-5	20 / 1	12			1176	12	20 / 1	WAREHOUSE RECEPTACLES	6	
							720					
3,4	7	FIRE SPRINKLER BELL	20 / 1	12	100			12	20 / 1	WAREHOUSE RECEPTACLES	8	
					720							
3,4	9	FIRE ALARM CONTROL PANEL	20 / 1	12		100		12	20 / 1	WAREHOUSE RECEPTACLES	10	
						720						
3	11	LV TERMINATION CABINET	20 / 1	12			180	12	20 / 1	WAREHOUSE RECEPTACLES	12	
							720					
3	13	WAREHOUSE RECEPTACLES	20 / 1	12	500			12	20 / 1	OFFICE RECEPTACLES	14	
					540							
3	15	WAREHOUSE RECEPTACLES	20 / 1	12		500		12	20 / 1	RESTROOM/EXTERIOR RECEPTACLES	16	
						500						
3	17	WAREHOUSE RECEPTACLES	20 / 1	12			500	6	50 / 2	208V RECEPTACLE	18	
							2000					
3	19	WAREHOUSE RECEPTACLES	20 / 1	12	500			6	/ 2	"	20	
					2000							
3	21	WAREHOUSE RECEPTACLES	20 / 1	12		500		6	50 / 2	208V RECEPTACLE	22	
						2000						
3	23	WAREHOUSE RECEPTACLES	20 / 1	12			500	6	/ 2	"	24	
							2000					
3	25	WAREHOUSE RECEPTACLES	20 / 1	12	500			6	50 / 2	208V RECEPTACLE	26	
					2000							
1,3	27	EXTERIOR LIGHTING	20 / 1	12		1016		6	/ 2	"	28	
						2000						
3	29	LIGHTING CONTROLS	20 / 1	12			100	12	20 / 1	INTERIOR LIGHTING	30	1,2,3
							1016					
	31	MONORAIL	40 /	8	2100			12	20 / 1	INTERIOR LIGHTING	32	1,2,3
					1000							
	33	MONORAIL	/	8		2100		12	20 / 1	EXTERIOR LIGHTING	34	1,2,3
						300						
	35	MONORAIL	/ 3	8			2100	12	20 / 1	EXTERIOR LIGHTING	36	1,2,3
							300					
3	37	WH-2	20 / 1	12	1500			6	60 /	SURGE PROTECTION DEVICE	38	
	39	SPARE	20 / 1					6	/	"	40	
	41	SPARE	20 / 1					6	/ 3	"	42	
		CONNECTED LOAD (VA) =			12680	10956	11312					
		25% OF CONTINUOUS LOAD =			250	254	329					
		TOTAL (VA) =			12930	11210	11641					
		TOTAL ÷ 120 VOLT =			108 A	93 A	97 A					

PANEL HA

200A, 480V, 3Ø, 3W, MCB
24 FULL SIZE BOLT ON CB SPACES
42K AIC PANEL & BRANCH CB'S
WITH 200A MCB

SERVICE ENTRANCE LISTED

FLUSH MOUNT, NEMA 1
LOCATION: WAREHOUSE
WITH EQUIP'T GND BUS

SEE NOTE	CKT #	DESCRIPTION	AMP CB / # POLE	WIRE SIZE	PHASE A VA	PHASE B VA	PHASE C VA	WIRE SIZE	AMP CB / # POLE	DESCRIPTION	CKT #	SEE NOTE
	1	SPACE						6	60 /	SURGE PROTECTION DEVICE	2	
	3							6		SURGE PROTECTION DEVICE	4	
	5							6	/ 3	SURGE PROTECTION DEVICE	6	
	7									SPACE	8	
	9									SPACE	10	
	11									SPACE	12	
	13									SPACE	14	
	15									SPACE	16	
	17									SPACE	18	
	19				12930			2	100 /	TRANSFORMER "TA"	20	
	21					11210		2		"	22	
	23						11641	2	/ 3	"	24	
		CONNECTED LOAD (VA) =			12930	11210	11641					
		25% OF CONTINUOUS LOAD =			0	0	0					
		TOTAL (VA) =			12930	11210	11641					
		TOTAL ÷ 277 VOLT =			47 A	41 A	42 A					

PANEL SCHEDULE NOTES

1. LONG CONTINUOUS LOAD (LCL). ADDITIONAL 25% ADDED AT BOTTOM OF PANEL. FEEDER CALCULATED AT 125% OF TOTAL CONNECTED LOAD.
2. ROUTE BRANCH CIRCUIT THROUGH LIGHTING CONTROLS. SEE DIAGRAM ON SHEET A6AE05.
3. PROVIDE SEPARATE NEUTRAL WITH THIS CIRCUIT.
4. PROVIDE LOCKING DEVICE ON THIS CIRCUIT BREAKER.

REV	DATE	BY	DESCRIPTION

DESIGNED RP
DRAWN DM
CHECKED JD
DRAWN SEPT. 2013

REGISTERED PROFESSIONAL ENGINEER WILLIAM A. THOMA NO. 10757 ELECTRICAL STATE OF CALIFORNIA
EXP. 06/30/15 REF. #13-8008

thoma ENGINEERING
THOMA ELECTRIC, INC.
P.O. Box 1167 - 3562 Empleo St.
San Luis Obispo, CA 93406
Phone: (805) 543-3850
Fax: (805) 543-3829
cad@thomaelec.com

carollo®

SAN LUIS OBISPO COUNTY

SAN LUIS OBISPO COUNTY
LOS OSOS WATER RECYCLING FACILITY PROJECT
ELECTRICAL
MAINTENANCE BUILDING
ELECTRICAL SCHEDULES

VERIFY SCALES
BAR IS ONE INCH ON ORIGINAL DRAWING
0 1"
IF NOT ONE INCH ON THIS SHEET, ADJUST SCALES ACCORDINGLY

JOB NO. 8930A.11
DRAWING NO. 06AE06
SHEET NO. OF XX

K:\DWGS\13-8008\13-8008_06AE06.dwg - lynda - Sep 10, 2013 - 3:49pm

INDOOR LIGHTING POWER ALLOWANCE — LTG-3C

Project Name: LOS OSOS WATER RECYCLING FACILITY | Date: 9/10/2013

ALLOWED LIGHTING POWER (Chose One Method)

A Separate LTG-3C must be filled out for Conditioned and Unconditioned Spaces. Indoor Lighting Power Allowances listed on this page are only for:
☑ CONDITIONED SPACES ☐ UNCONDITIONED SPACES

COMPLETE BUILDING METHOD

BUILDING CATEGORY (From §146 Table 146-E)	WATTS PER (ft²)	X	COMPLETE BLDG. AREA	=	ALLOWED WATTS
TOTALS			AREA		WATTS

AREA CATEGORY METHOD

BUILDING CATEGORY (From §146 Table 146-F)	WATTS PER (ft²)	X	Area ft²	=	ALLOWED WATTS
Industrial Work, Low Bay	0.90		2,466		2,219
Office <= 250 sqft	1.10		183		201
Corridor/Restroom/Support	0.60		77		46
TOTALS			2,726		2,467
			AREA		WATTS

TAILORED METHOD

Total Allowed Watts using the Tailored Method taken from LTG-4C (Page 1 of 4) Row 3: 0

The Indoor lighting power allowance using the Tailored Method of compliance shall be determined using the LTG-4C set of forms. A separate set of LTG-4C forms shall be filled out for CONDITIONED and UNCONDITIONED spaces

CERTIFICATE OF COMPLIANCE (Part 3 of 4) — LTG-1C

Project Name: LOS OSOS WATER RECYCLING FACILITY | Date: 9/10/2013

INDOOR LIGHTING SCHEDULE and FIELD INSPECTION ENERGY CHECKLIST

Fill in controls for all spaces: a) area controls, b) multi-level controls, c) manual daylighting controls for daylit areas > 250 ft², automatic daylighting controls for daylit areas > 2,500 ft², d) shut-off controls, e) display lighting controls, f) tailored lighting controls – general lighting controlled separately from display, ornamental and display case lighting and g) demand responsive automatic controls for retail stores > 50,000 ft², in accordance with Section 131.

MANDATORY LIGHTING CONTROLS – FIELD INSPECTION ENERGY CHECKLIST

Type/ Description	Number of Units	Location in Building	Special Features	Field Inspector Pass	Fail
OCCUPANCY SENSORS	–	–	☐	☐	☐

SPECIAL FEATURES INSPECTION CHECKLIST (See Page 2 of 4 of LTG-1C)

The local enforcement agency should pay special attention to the items specified in this checklist. These items require special written justification and documentation, and special verification. The local enforcement agency determines the adequacy of the justification, and may reject a building or design that otherwise complies based on the adequacy of the special justification and documentation submitted.

Field Inspector's Notes or Discrepancies:

CERTIFICATE OF COMPLIANCE (Part 1 of 4) — LTG-1C

Project Name: LOS OSOS WATER RECYCLING FACILITY | Date: 9/10/2013

Project Address	Climate Zone	Total Cond. Floor Area	Unconditioned Floor Area
LOS OSOS	5	2,726	0

GENERAL INFORMATION

Building Type: ☑ Nonresidential ☐ High-Rise Residential ☐ Hotel/Motel Guest Room ☐ School ☐ Relocatable Public School ☑ Conditioned Spaces ☐ Unconditioned Spaces

Phase of Construction: ☑ New Construction ☐ Addition ☐ Alteration

Method of Compliance: ☐ Complete Building ☑ Area Category ☐ Tailored

Documentation Author's Declaration Statement

I certify that this Certificate of Compliance documentation is accurate and complete.

Name	William Thoma	Signature	
Company	Thoma Electric, Inc	Date	9/10/2013
Address	3562 Empleo St.	CEA # / CEPE #	
City/State/Zip	San Luis Obispo, CA 93401	Phone	805-543-3850

The Principal Lighting Designer's Declaration Statement

- I am eligible under Division 3 of the California Business and Professional Code to accept responsibility for the lighting design.
- This Certificate of Compliance identifies the lighting features and performance specifications required for compliance with Title 24, Pages 1 and 6 of the California Code of Regulations.
- The design features represented on this Certificate of Compliance are consistent with the information provided to document this design on the other applicable compliance forms, worksheets, calculations, plans and specifications submitted to the enforcement agency for approval with this building permit application.

Name	William Thoma	Signature	
Company	Thoma Electric Inc.	Phone	805-543-3850
Address	3562 Empleo St.	License #	10757
City/State/Zip	San Luis Obispo, CA 93401	Date	9/10/2013

Lighting Mandatory Measures
Indicate location on building plans of Mandatory Measures Note Block: 06AE07

LIGHTING COMPLIANCE FORMS & WORKSHEETS (check box if worksheets is included)

For detailed instructions on the use of this and all Energy Efficiency Standards compliance forms: please refer to the Nonresidential Manual published by the California Energy Commission.

☑	LTG-1C Pages 1 through 4	Certificate of Compliance. All Pages required on plans for all submittals.
☐	LTG-2C	Lighting Controls Credit Worksheet
☑	LTG-3C	Indoor Lighting Power Allowance
☐	LTG-4C Pages 1 through 4	Tailored Method Worksheet
☐	LTG-5C Pages 1 and 2	Line Voltage Track Lighting Worksheet

LIGHTING MANDATORY MEASURES: NONRESIDENTIAL — LTG-MM

Project Name: LOS OSOS WATER RECYCLING FACILITY | Date: 9/10/2013

Indoor Lighting Measures:

§131(d):	**Shut-off Controls**
1.	For every floor, all interior lighting systems shall be equipped with a separate automatic control to shut off the lighting. This automatic control shall meet the requirements of Section 119 and may be an occupancy sensor, automatic time switch, or other device capable of automatically shutting off the lighting.
2.	Override for Building Lighting Shut-off: The automatic building shut-off system is provided with a manual, accessible override switch in sight of the lights. The area of override is not to exceed 5,000 square feet.
§119(h):	Automatic Control Devices Certified: All automatic control devices specified are certified, all alternate equipment shall be certified and installed as directed by the manufacturer.
§111:	Fluorescent Ballast and Luminaires Certified: All fluorescent fixtures specified for the project are certified and listed in the Directory. All installed fixtures shall be certified.
§131(a):	Individual Room/Area Controls: Each room and area in this building is equipped with a separate switch or occupancy sensor device for each area with floor-to-ceiling walls.
§131(b):	Uniform Reduction for Individual Rooms: All rooms and areas greater than 100 square feet and more than 0.8 watts per square foot of lighting load shall be controlled with bi-level switching for uniform reduction of lighting within the room.
§131(c):	Daylight Area Control: All rooms with windows and skylights that are greater than 250 square feet and that allow for the effective use of daylight in the area shall have 50% of the lamps in each daylit area controlled by a separate switch, or the effective use of daylight cannot be accomplished because the windows are continuously shaded by a building on the adjacent lot. Diagram of shading during different times of the year is included on plans.
§131(c):	Display Lighting. Display lighting shall be separately switched on circuits that are 20 amps or less.6.

Outdoor Lighting Measures:

§130(c) 1:	Mandatory lighting power determination for medium base sockets without permanently installed ballasts
§132(a):	All permanently installed luminaires with lamps rated over 100 Watts either have a lamp efficacy of at least 60 lumens per Watt or are controlled by a motion sensor.
§132(b):	All Luminaires with lamps rated greater than 175 Watts in hardscape area, including parking lots, building entrances, canopies, and all outdoor sales areas meet the Cutoff Requirements.
§132(c) 1:	All permanently installed outdoor lighting meets the control requirements listed.
§132(c):	Building facades, parking lots, garages, canopies, and outdoor sales areas meet the Multi-Level Lighting Requirements listed.

CERTIFICATE OF COMPLIANCE (Part 4 of 4) — LTG-1C

Project Name: LOS OSOS WATER RECYCLING FACILITY | Date: 9/10/2013

CONDITIONED AND UNCONDITIONED SPACE LIGHTING MUST NOT BE COMBINED FOR COMPLIANCE

Indoor Lighting Power for Conditioned Spaces		Watts	Indoor Lighting Power for Unconditioned Spaces		Watts
Installed Lighting (from Conditioned LTG-1C, Page 2)		2,284	Installed Lighting (from Unconditioned LTG-1C, Page 2)		0
Lighting Control Credit Conditioned Spaces (from LTG-2C)	-	0	Lighting Control Credit Unconditioned Spaces (from LTG-2C)	-	0
Adjusted Installed Lighting Power	=	2,284	Adjusted Installed Lighting Power	=	0
Complies if Installed ≤ Allowed			Complies if Installed ≤ Allowed		
Allowed Lighting Power Conditioned Spaces (from LTG-3C or PERF-1)		2,467	Allowed Lighting Power Unconditioned Spaces (from LTG-3C)		0

Required Acceptance Tests

Designer:
This form is to be used by the designer and attached to the plans. Listed below is the acceptance test for the Lighting system, **LTG-2A and LTG-3A**. The designer is required to check the acceptance tests and list all control devices serving the building or space shall be certified as meeting the Acceptance Requirements for Code Compliance. If all the lighting system or control of a certain type requires a test, list the different lighting and the number of systems. The NA7 Section in the Appendix of the Nonresidential Reference Appendices Manual describes the test. Since this form will be part of the plans, completion of this section will allow the responsible party to budget for the scope of work appropriately. **Forms can be grouped by type of Luminaire controlled.**

Enforcement Agency:
Systems Acceptance: Before Occupancy Permit is granted for a newly constructed building or space or when ever new lighting system with controls is installed in the building or space shall be certified as meeting the Acceptance Requirements.
The **LTG-2A and LTG-3A** forms are not considered complete forms and are not to be accepted by the enforcement agency unless the boxes are checked and/or filled and signed. In addition, a Certificate of Acceptance forms shall be submitted to the enforcement agency that certifies plans, specifications, installation certificates, and operating and maintenance information meet the requirements of §10-103(b) of Title 24 Part 6. The field inspector must receive the properly filled out and signed forms before the building can receive final occupancy. A copy of the **LTG-2A and LTG-3A** for each different lighting luminaire control(s) must be provided to the owner of the building for their records.

Luminaires Controlled				LTG-2A and LTG-3A
Equipment Requiring Testing	Description	Number of Luminaires controlled	Location	Controls and Sensors and Automatic Daylighting Controls Acceptance
				☐
				☐
				☐
				☐
				☐
				☐
				☐
				☐
				☐
				☐
				☐
				☐
				☐
				☐
				☐
				☐
				☐
				☐
				☐
				☐
				☐
				☐

CERTIFICATE OF COMPLIANCE (Part 2 of 4) — LTG-1C

Project Name: LOS OSOS WATER RECYCLING FACILITY | Date: 9/10/2013

INDOOR LIGHTING SCHEDULE and FIELD INSPECTION ENERGY CHECKLIST

Installation Certificate, LTG-1- INST (Retain a copy and verify form is completed and signed.) **Field Inspector** ☐

Certificate of Acceptance, LTG-2A and LTG-3A (Retain a copy and verify form is completed and signed.) **Field Inspector** ☐

A separate Lighting Schedule Must Be Filled Out for Conditioned and Unconditioned Spaces Installed Lighting Power listed on this Lighting Schedule is only for:

☑ **CONDITIONED SPACE** ☐ **UNCONDITIONED SPACE**

☑ The actual indoor lighting power listed below includes all installed permanent and portable lighting systems in accordance with §146(a).

☑ Only for offices: Up to the first 0.2 watts per square foot of portable lighting shall not be required to be included in the calculation of actual indoor lighting power density in accordance with the Exception to §146(a). All portable lighting in excess of 0.2 watts per square foot is totaled below.

Luminaire (Type, Lamps, Ballasts)		Installed Watts						
A	B	C	D	E		F	G	H
None or Item Tag	Complete Luminaire Description[1] (i.e. 3 lamp fluorescent troffer, F32T8, one dimmable electronic ballasts)		Watts per Luminaire[1]	How wattage Was determined: CEC Default From NAS	According To §130 (d or e)[2]	Number of Luminaires	Installed Watts (D X F)	Field Inspector[2]: Pass	Fail
A	127W LED		127.0	☐	☑	14	1,778	☐	☐
B	32W LED SURFACE LIGHT		32.0	☐	☑	4	128	☐	☐
C	47W LED STRIP LIGHT		47.0	☐	☑	6	282	☐	☐
C1	32W LED SURFACE LIGHT		32.0	☐	☑	3	96	☐	☐
				☐	☐			☐	☐
				☐	☐			☐	☐
				☐	☐			☐	☐
				☐	☐			☐	☐
				☐	☐			☐	☐
				☐	☐			☐	☐
				☐	☐			☐	☐
				☐	☐			☐	☐
				☐	☐			☐	☐
				☐	☐			☐	☐
				☐	☐			☐	☐
				☐	☐			☐	☐
				☐	☐			☐	☐
				☐	☐			☐	☐
				☐	☐			☐	☐
				☐	☐			☐	☐
			Installed Watts Page Total:				2,284		
Building total number of pages:			Installed Watts Building Total (Sum of all pages) Enter into LTG-1C Page 4 of 4				2,284		

1. Wattage shall be determined according to Section 130 (d and e). Wattage shall be rating of light fixture, not rating of bulb.
2. If Fail then describe on Page 2 of the Inspection Checklist Form and take appropriate action to correct. Verify building plans if necessary.

REV	DATE	BY	DESCRIPTION

DESIGNED RP
DRAWN DM
CHECKED JD
DRAWN SEPT. 2013

REGISTERED PROFESSIONAL ENGINEER WILLIAM A. THOMA NO. 10757 ELECTRICAL STATE OF CALIFORNIA
EXP. 06/30/15 REF. #13-8008

thoma ENGINEERING
THOMA ELECTRIC, INC.
P.O. Box 1167 – 3562 Empleo St.
San Luis Obispo, CA 93406
Phone: (805) 543-3850
Fax: (805) 543-3829
cad@thomaelec.com

carollo

SAN LUIS OBISPO COUNTY

SAN LUIS OBISPO COUNTY
LOS OSOS WATER RECYCLING FACILITY PROJECT
ELECTRICAL
MAINTENANCE BUILDING
INTERIOR TITLE 24 COMPLIANCE FORMS

VERIFY SCALES
BAR IS ONE INCH ON ORIGINAL DRAWING
0 1"
IF NOT ONE INCH ON THIS SHEET, ADJUST SCALES ACCORDINGLY

JOB NO. 8930A.11
DRAWING NO. 06AE07
SHEET NO. OF XX

K:\DWGS\13-8008\13-8008_06AE07.dwg – lynda – Sep 10, 2013 – 3:49pm

OUTDOOR LIGHTING WORKSHEET (Part 1 of 3) OLTG-2C

Project Name: *LOS OSOS WATER RECYCLING FACILITY* — Date: *9/10/2013*

A. LIGHTING POWER ALLOWANCE FOR GENERAL HARDSCAPE

AREA WATTAGE ALLOWANCE (AWA)			LINEAR WATTAGE ALLOWANCE (LWA)			INITIAL WATTAGE ALLOWANCE	TOTAL GENERAL HARDSCAPE LIGHTING ALLOWANCE
A	B	C	D	E	F	G	H
Illuminated Hardscape Area	AWA Per Square Foot	AWA (A X B)	Perimeter Length of General Hardscape	LWA Per Linear Foot	LWA (D X E)	IWA (Watts)	C + F + G
348	0.092	32	125	0.920	115	770	917
Enter total into OLTG-1C; Page 4 of 4; Row A; Lighting Power Allowance for General Hardscape							917

☑ Yes AWA, LWA, and IWA from Table 147-A was used as appropriate for the Outdoor Lighting Zone

B. SPECIFIC APPLICATION LIGHTING WATTAGE ALLOWANCE PER UNIT LENGTH (Available only for sales frontage)

DETERMINE WATTAGE ALLOWANCE				LUMINAIRE TYPE		DESIGN WATTS			
A	B	C	D	E	F	G	H	I	J
Specific Lighting Application	Linear Foot of Frontage	Sales Frontage Allowance for OLZ (Watts per LF)	Wattage Allowance (B X C)	Name or Symbol	Luminaire Type	Lumin QTY	Watts Per Luminaire	Design Watts (G X H)	Allowed Watts Minimum of D or I
Enter total into OLTG-1C; Page 4 of 4; Row B; Specific Application Lighting Wattage Allowance Per Unit Length									0

C. SPECIFIC APPLICATION WATTAGE ALLOWANCE FOR ORNAMENTAL LIGHTING

DETERMINE WATTAGE ALLOWANCE				LUMINAIRE TYPE		DESIGN WATTS			
A	B	C	D	E	F	G	H	I	J
Specific Lighting Application	Square feet of Harscape	Ornamental Lighting Allowance for OLZ (Watts per ft²)	Wattage Allowance (B X C)	Name or Symbol	Luminaire Type	Lumin QTY	Watts Per Luminaire	Design Watts (G X H)	Allowed Watts Minimum of D or I
Enter total into OLTG-1C; Page 4 of 4; Row C; Specific Application Wattage for Ornamental Lighting									0

EnergyPro 5.1 by EnergySoft *User Number: 6405* *RunCode: 2013-09-10T09:45:56* *ID: 13-8008* *Page 11 of 12*

OUTDOOR LIGHTING WORKSHEET (Part 2 of 3) OLTG-2C

Project Name: *LOS OSOS WATER RECYCLING FACILITY* — Date: *9/10/2013*

D. SPECIFIC APPLICATION LIGHTING WATTAGE ALLOWANCE PER APPLICATION

DETERMINE WATTAGE ALLOWANCE				DESIGN WATTS					ALLOWANCE
A	B	C	D	E	F	G	H	I	J
Specific Lighting Application	Number of Applications	Specific Application Allowance (watts)	Wattage Allowance (B X C)	Luminaire Symbol	Luminaire Type	Lumin QTY	Watts Per Luminaire	Design Watts (G X H)	Allowed Watts Minimum of D or I
ROLL UP DOOR	2	100	200	S	38W LED WALL SCONCE	2	38.0	76	76
BLDG. ENTRANCE	1	100	100	S	38W LED WALL SCONCE	1	38.0	38	38
Enter total into OLTG-1C; Page 4 of 4; Row D; Specific Application Wattage Allowance Per Application									114

E. SPECIFIC APPLICATION LIGHTING WATTAGE ALLOWANCE PER AREA

DETERMINE WATTAGE ALLOWANCE				LUMINAIRE TYPE		DESIGN WATTS			
A	B	C	D	E	F	G	H	I	J
Specific Lighting Application	Illuminated Area of Application	Specific Application Allowance (watts per ft²)	Wattage Allowance (B X C)	Code for Luminaire Type	Luminaire Type	Lumin QTY	Watts Per Luminaire	Design Watts (G X H)	Allowed Watts Minimum of D or I
NON SALES CANOPY	1,265	0.408	516	A	127W LED	8	127.0	1,016	516
Enter total into OLTG-1C; Page 4 of 4; Row E; Specific Application Lighting Wattage Allowance Per Area									516

EnergyPro 5.1 by EnergySoft *User Number: 6405* *RunCode: 2013-09-10T09:45:56* *ID: 13-8008* *Page 12 of 12*

CERTIFICATE OF COMPLIANCE (Part 3 of 4) OLTG-1C

Project Name: *LOS OSOS WATER RECYCLING FACILITY* — Date: *9/10/2013*

A. OUTDOOR LIGHTING ZONE

OUTDOOR LIGHTING ZONE: ☐ OLZ 1 ☐ OLZ 2 ☑ OLZ 3 ☐ OLZ 4

Is the Outdoor Lighting Zone: ☑ Default in accordance with §10-114, or ☐ Amended by JHA

Complete the information below if the default Outdoor Lighting Zone has been amended by the local jurisdiction having authority (JHA):

- ☐ The site is a government designated park, recreational area, wildlife preserve, or portion thereof, and has been designated as LZ2 or LZ3, in accordance with Table 10-114-A, because the site is contained within such a zone.
- ☐ The local jurisdiction having authority has officially adopted a change to the State Default Lighting Zone and has notified the Energy Commission by providing the materials required in §10-114(d) to the Executive Director.
- ☐ The adopted change is posted on the Energy Commission website.

B. ADDITIONAL LIGHTING POWER ALLOWANCE FOR ORDINANCE REQUIREMENTS

Are additional lighting power allowances for ordinance in Table 147-C used? ☐ Yes ☑ No

Complete the information below if additional lighting power allowances for ordinance requirements are used.

- ☐ The local jurisdiction having authority has officially adopted specific outdoor light levels, which are expressed as average or minimum footcandle levels, by following a public process that allowed for formal public notification, review, and comment about the proposed change.
- ☐ The local jurisdiction having authority which adopted specific outdoor light levels and has notified the Commission by providing the following materials required §10-114(f) to the Executive Director.

C. ACCEPTANCE FORMS

Required Acceptance Tests

Designer:

This form is to be used by the designer and attached to the plans. Listed below is the acceptance test for the Lighting system, **OLTG-2A**. The designer is required to check the acceptance tests and list all control devices serving the building or space shall be certified as meeting the Acceptance Requirements for Code Compliance. If all the lighting system or control of a certain type requires a test, list the different lighting and the number of systems. The NA7 Section in the Appendix of the Nonresidential Reference Appendices Manual describes the test. Since this form will be part of the plans, completion of this section will allow the responsible party to budget for the scope of work appropriately. **Forms can be grouped by type of Luminaire controlled.**

Enforcement Agency:

Systems Acceptance. Before Occupancy Permit is granted for a newly constructed building or space or when ever new lighting system with controls is installed in the building or space shall be certified as meeting the Acceptance Requirements. The **OLTG-2A** form is not considered a complete form and is not to be accepted by the enforcement agency unless the boxes are checked and/or filled and signed. In addition, a Certificate of Acceptance forms shall be submitted to the enforcement agency that certifies plans, specifications, installation certificates, and operating and maintenance information meet the requirements of §10-103(b) of Title 24 Part 6. The field inspector must receive the properly filled out and signed forms before the building can receive final occupancy. A copy of the **OLTG-2A** for each different lighting luminaire control(s) must be provided to the owner of the building for their records.

	Luminaires Controlled			Certificate of Acceptance OLTG-2A[1]
Equipment Requiring Testing	Description	Qty. of Like Controls	Location	Outdoor Lighting Acceptance Tests
TIMECLOCK	–	–	–	

1. Insert: **OMS** for Outdoor Motion Sensor; **OLSC** for Outdoor Lighting Shutoff Controls; **OP** for Outdoor Photocontrol; **ATS** for Astronomical Time Switch; and, **STS** for Standard (non-astronomical) Time Switch acceptance.

EnergyPro 5.1 by EnergySoft *User Number: 6405* *RunCode: 2013-09-10T09:45:56* *ID: 13-8008* *Page 9 of 12*

CERTIFICATE OF COMPLIANCE (Part 4 of 4) OLTG-1C

Project Name: *LOS OSOS WATER RECYCLING FACILITY* — Date: *9/10/2013*

ALLOWED AND INSTALLED OUTDOOR LIGHTING POWER

		Lighting Wattage Power Allowance
A	Lighting power allowance for general hardscape (from OLTG-2C Page 1 of 3)	917
B	Specific application lighting wattage allowance per unit length (from OLTG-2C Page 1 of 3)	0
C	Specific application lighting wattage allowance for ornamental lighting (from OLTG-2C Page 1 of 3)	0
D	Specific application lighting wattage allowance per application (from OLTG-2C Page 2 of 3)	114
E	Specific application lighting wattage allowance per area (from OLTG-2C Page 2 of 3)	516
F	Specific application lighting wattage allowance for ordinance requirements (from OLTG-2C Page 3 of 3)	0
G	Total Allowed Wattage = Sum of rows A through F:	1,547
H	Total installed watts (from Compliance Fixture Schedule, (from OLTG-2C Page 1 of 3)	1,168

Complies if wattage in row H is less than or equal to the wattages in row G ☑ Yes ☐ No

EnergyPro 5.1 by EnergySoft *User Number: 6405* *RunCode: 2013-09-10T09:45:56* *ID: 13-8008* *Page 10 of 12*

CERTIFICATE OF COMPLIANCE (Part 1 of 4) OLTG-1C

Project Name: *LOS OSOS WATER RECYCLING FACILITY* — Date: *9/10/2013*

Project Address: *LOS OSOS, CA* — Total Illuminated Area: *1,613*

GENERAL INFORMATION

Phase of Construction: ☑ New Construction ☐ Addition ☐ Alteration

Documentation Author's Declaration Statement

I certify that this Certificate of Compliance documentation is accurate and complete.

Name: William Thoma	Signature: [signature]
Company: Thoma Electric, Inc	Date: 9/10/2013
Address: 3562 Empleo St.	CEA # CEPE #
City/State/Zip: San Luis Obispo, CA 93401	Phone: 805-543-3850

Principal Lighting Designer's Declaration Statement

- I am eligible under Division 3 of the California Business and Professional Code to accept responsibility for the lighting design.
- This Certificate of Compliance identifies the lighting features and performance specifications required for compliance with Title 24, Pages 1 and 6 of the California Code of Regulations.
- The design features represented on this Certificate of Compliance are consistent with the information provided to document this design on the other applicable compliance forms, worksheets, calculations, plans and specifications submitted to the enforcement agency for approval with this building permit application.

Name: William Thoma	Signature: [signature]
Company: Thoma Electric Inc.	Phone: 805-543-3850
Address: 3562 Empleo St.	License #: 10757
City/State/Zip: San Luis Obispo, CA 93401	Date: 9/10/2013

Principal Lighting Designer's Declaration

☑ I certify that this Certificate of Compliance documentation is accurate and complete, and accounts for all outdoor lighting power, including building mounted, pole mounted, as well as all other lighting designed for the site, and that Additional Lighting Power Allowances for Specific Applications or Additional Lighting Power Allowances for Ordinance Requirements have not been counted more than one time for the same area, in accordance with Section 147 of the Standards.

Outdoor Lighting Mandatory Measures
Indicate location on building plans of Mandatory Measures Note Block: 06AE07

LIGHTING COMPLIANCE FORMS & WORKSHEETS (check box if worksheets is included)

For detailed instructions on the use of this and all Energy Efficiency Standards compliance forms; please refer to the Nonresidential Manual published by the California Energy Commission.

☑	OLTG-1C	Certificate of Compliance. All 4 pages required on plans for all submittals.
☑	OLTG-2C	(Pages 1 of 3) Lighting Wattage Allowances for General Hardscape, Sales Frontage, or Ornamental Lighting. Optional on plans.
☑	OLTG-2C	(Pages 2 of 3) Lighting Wattage Allowance for Per Application or Per Area. Optional on plans.
☐	OLTG-2C	(Pages 3 of 3) Additional Lighting Power Allowance for Ordinance Requirements. Optional on plans.

EnergyPro 5.1 by EnergySoft *User Number: 6405* *RunCode: 2013-09-10T09:45:56* *ID: 13-8008* *Page 7 of 12*

CERTIFICATE OF COMPLIANCE (Part 2 of 4) OLTG-1C

Project Name: *LOS OSOS WATER RECYCLING FACILITY* — Date: *9/10/2013*

COMPLIANCE FIXTURE / LIGHTING CONTROL SCHEDULE and FIELD INSPECTION CHECKLIST

INSTALLATION CERTIFICATE, OLTG-1INST (Retain a copy and verify form is completed and signed.) **Field Inspection** ☐

CERTIFICATE OF ACCEPTANCE, OLTG-2A (Retain a copy and verify form is completed and signed.) **Field Inspection** ☐

Luminaire Schedule			Installed Watts						Field Inspector[2]	
A	B	C	D	E	F		G	H	I	
					How wattage was determined					
Name or Item Tag	Luminaire Description[1] See footnote below (i.e.: 1 lamp pole-top shoe-box 400 watt metal halide)	Cutoff Designation	Watts per Luminaire	Special Features	Default from NA-8	According to §130 (D or E)	Number of Luminaires	Installed Watts (D X G)	Pass	Fail
S	38W LED WALL SCONCE		38.0	☐	☐	☑	4	152	☐	☐
A	127W LED		127.0	☐	☐	☑	8	1,016	☐	☐
				☐	☐	☐			☐	☐
				☐	☐	☐			☐	☐
				☐	☐	☐			☐	☐
				☐	☐	☐			☐	☐
				☐	☐	☐			☐	☐
				☐	☐	☐			☐	☐
				☐	☐	☐			☐	☐
Enter total into OLTG-1C; Page 4 of 4: Row H; Total Installed Watts:								1,168		

1. Type of luminaire (i.e.: post top, wall pack, surface, shoe box); for non-incandescent luminaires, indicate nominal lamp wattage and lamp type (i.e.: fluorescent, incandescent, HID); ballast type (i.e.: electronic or magnetic); number of lamps and number of ballasts per luminaire. For incandescent luminaires, the luminaire wattage listed in column D shall be the maximum relamping rated wattage on a permanent factory-installed label on the luminaire, NOT the wattage of the lamp (bulb) used, in accordance with Section 130(d or e).
2. If Fail then describe on Page 2 of the Inspection Checklist Form and take appropriate action to correct. Verify building plans if necessary.

EXEMPT LUMINAIRES **Field Inspection** ☐

Name or Symbol	Description of exempt luminaires in accordance with §147

MANDATORY CONTROLS **Field Inspection** ☐

#	Description	Location		#	Description	Location

SPECIAL FEATURES INSPECTION CHECKLIST (See Page 2 of 4 of OLTG-1C)

The local enforcement agency should pay special attention to the items specified in this checklist. These items require special written justification and documentation, and special verification. The local enforcement agency determines the adequacy of the justification, and may reject a building or design that otherwise complies based on the adequacy of the special justification and documentation submitted.

Filed Inspector Notes or Discrepancies:

EnergyPro 5.1 by EnergySoft *User Number: 6405* *RunCode: 2013-09-10T09:45:56* *ID: 13-8008* *Page 8 of 12*

REV	DATE	BY	DESCRIPTION

DESIGNED RP — DRAWN DM — CHECKED JD — DRAWN SEPT. 2013

REGISTERED PROFESSIONAL ENGINEER — WILLIAM A. THOMA — NO. 10757 — ELECTRICAL — STATE OF CALIFORNIA — EXP. 06/30/15 — REF. #13-8008

THOMA ENGINEERING — THOMA ELECTRIC, INC.

P.O. Box 1167 – 3562 Empleo St.
San Luis Obispo, CA 93406
Phone: (805) 543-3850
Fax: (805) 543-3829
cad@thomaelec.com

carollo®

SAN LUIS OBISPO COUNTY

SAN LUIS OBISPO COUNTY

LOS OSOS WATER RECYCLING FACILITY PROJECT

ELECTRICAL
MAINTENANCE BUILDING
EXTERIOR TITLE 24 COMPLIANCE FORMS

VERIFY SCALES — BAR IS ONE INCH ON ORIGINAL DRAWING — 0 1" — IF NOT ONE INCH ON THIS SHEET, ADJUST SCALES ACCORDINGLY

JOB NO. 8930A.11 — DRAWING NO. 06AE08 — SHEET NO. OF XX

K:\DWGS\13-8008\13-8008_06AE08.dwg – lynda – Sep 10, 2013 – 3:49pm

NOTE:
RENDERINGS ON THIS SHEET ARE AN ARTISTIC REPRESENTATION OF THE BUILDING, AND ARE PROVIDED FOR REFERENCE ONLY.

REV	DATE	BY	DESCRIPTION

DESIGNED KH
DRAWN IW
CHECKED FFG
DATE SEPTEMBER 2013

LICENSED ARCHITECT STEVEN D. PULTS No. C-8611 REN. 06-30-15 STATE OF CALIFORNIA

PULTS Steven D. Pults, AIA & Associates, LLP

carollo

SAN LUIS OBISPO COUNTY

SAN LUIS OBISPO COUNTY

LOS OSOS WATER RECYCLING FACILITY PROJECT

ARCHITECTURAL
DEWATERING BUILDING
RENDERING

VERIFY SCALES
BAR IS ONE INCH ON ORIGINAL DRAWING
0 1"
IF NOT ONE INCH ON THIS SHEET, ADJUST SCALES ACCORDINGLY

JOB NO. 8930A.11
DRAWING NO. 51AA00
SHEET NO. XXX OF XXX

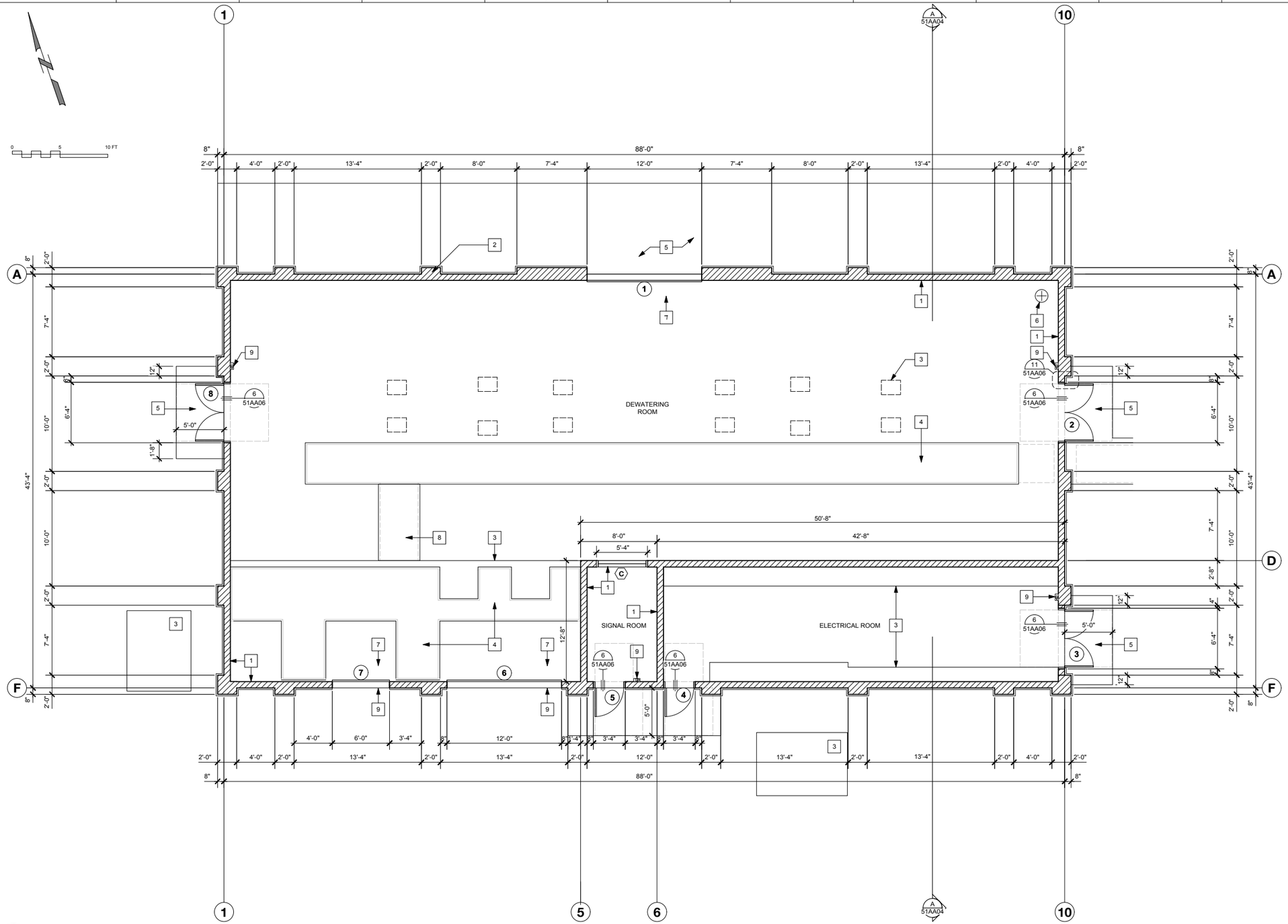

FLOOR PLAN GENERAL NOTES

1. Contractor shall provide a portable 2A10BC fire extinguisher on site during construction.
2. Fire extinguishers shall be 2A10BC in cabinet (Larsen's; Vertical Duo Stainless Steel w/ Lock). Mount at +48" to centerline of valve handle. Refer to floor plan for locations.
3. See Sheet 05AA09 for Door Schedule.
4. See Sheet 05AA10 for Window Schedule.

FLOOR PLAN REFERENCE NOTES

1. 8" CMU WALL
2. 16" CMU WALL/PILASTER
3. CONCRETE EQUIP PADS, SEE STRUCTURAL PLANS
4. METAL GRATES, SEE STRUCTURAL PLANS
5. CONCRETE SLAB, SEE STRUCTURAL PLANS
6. FIRE SPRINKLER RISER
7. OVERHEAD COILING DOOR
8. STEEL PLATE COVER, SEE STRUCTURAL PLANS
9. 8" CONCRETE CURB
9. FIRE EXTINGUISHER, REFER TO GENERAL NOTES

BUILDING DATA

BUILDING AREA:	3,461 SF
CONSTRUCTION TYPE:	V-B SPRINKLERED
TRUE BLDG HEIGHT LIMIT:	+30'-0"
OCCUPANCY:	F-2

1 FLOOR PLAN

SCALE: 3/16" = 1' - 0"

REV	DATE	BY	DESCRIPTION

DESIGNED KH
DRAWN IW
CHECKED FFG
DATE SEPTEMBER 2013

LICENSED ARCHITECT STEVEN D. PULTS NO. C-8611 REN. 06-30-15 STATE OF CALIFORNIA

PULTS Steven D. Pults, AIA & Associates, LLP

carollo

SAN LUIS OBISPO COUNTY

SAN LUIS OBISPO COUNTY

LOS OSOS WATER RECYCLING FACILITY PROJECT

ARCHITECTURAL
DEWATERING BUILDING
FLOOR PLAN

VERIFY SCALES
BAR IS ONE INCH ON ORIGINAL DRAWING
0 1"
IF NOT ONE INCH ON THIS SHEET, ADJUST SCALES ACCORDINGLY

JOB NO. 8930A.11
DRAWING NO. 51AA01
SHEET NO. XXX OF XXX

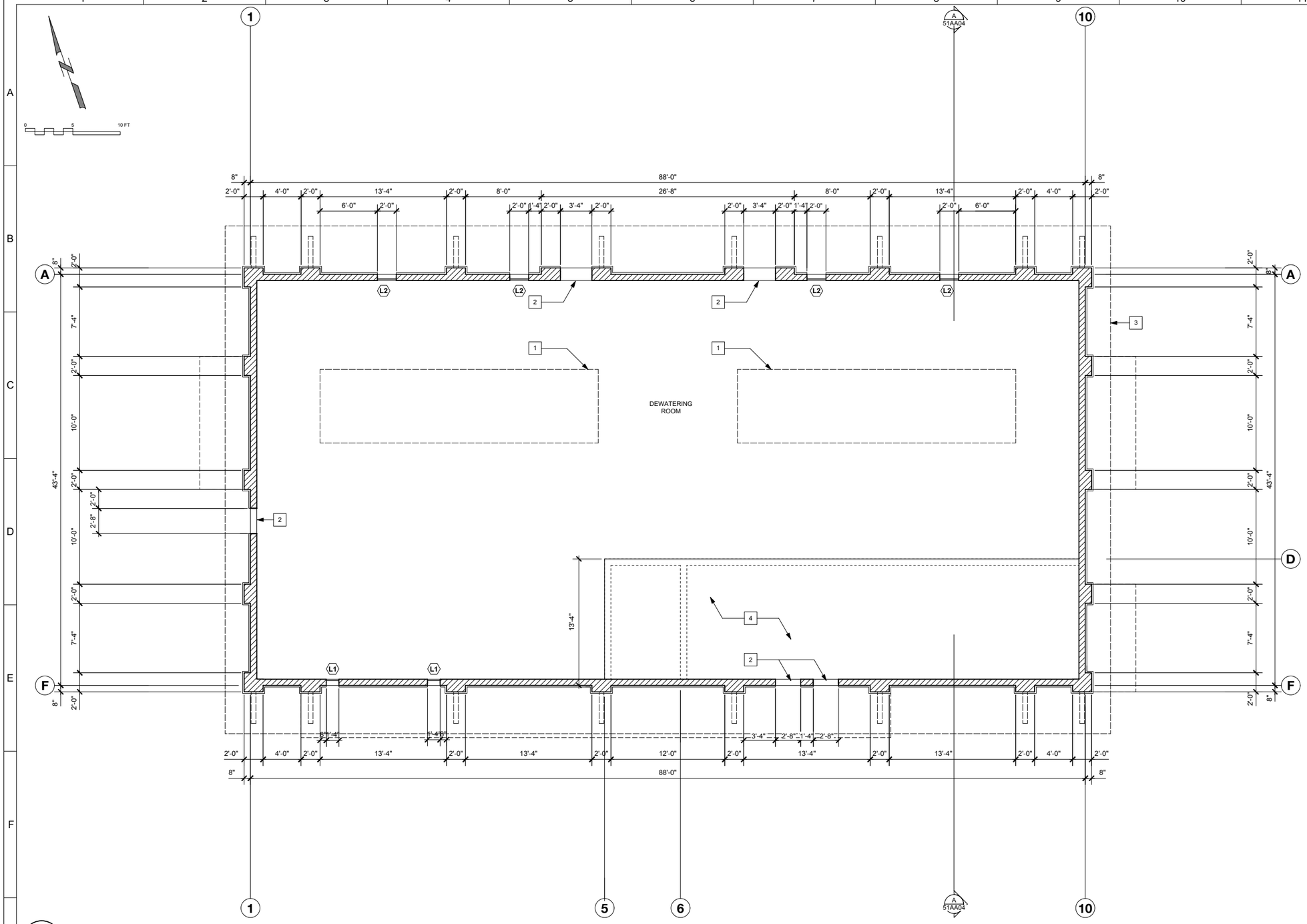

FLOOR PLAN GENERAL NOTES

1. See Sheet 05AA09 for Louver Schedule.

FLOOR PLAN REFERENCE NOTES

1. LINE OF REMOVEABLE ROOF PANEL ABOVE
2. WALL OPENING FOR CONVEYOR
3. OUTLINE OF ROOF ABOVE
4. 2-HOUR FIRE-RATED LID

1 CLERESTORY PLAN

SCALE: 3/16" = 1' - 0"

REV	DATE	BY	DESCRIPTION

DESIGNED KH
DRAWN IW
CHECKED FFG
DATE SEPTEMBER 2013

LICENSED ARCHITECT STEVEN D. PULTS LICENSE NO. 8611 EXP. 06-30-15 STATE OF CALIFORNIA

PULTS Steven D. Pults, AIA & Associates, LLP

carollo

SAN LUIS OBISPO COUNTY

SAN LUIS OBISPO COUNTY
LOS OSOS WATER RECYCLING FACILITY PROJECT
ARCHITECTURAL
DEWATERING BUILDING
CLERESTORY PLAN

VERIFY SCALES
BAR IS ONE INCH ON ORIGINAL DRAWING
0 1"
IF NOT ONE INCH ON THIS SHEET, ADJUST SCALES ACCORDINGLY

JOB NO. 8930A.11
DRAWING NO. 51AA02
SHEET NO. XXX OF XXX

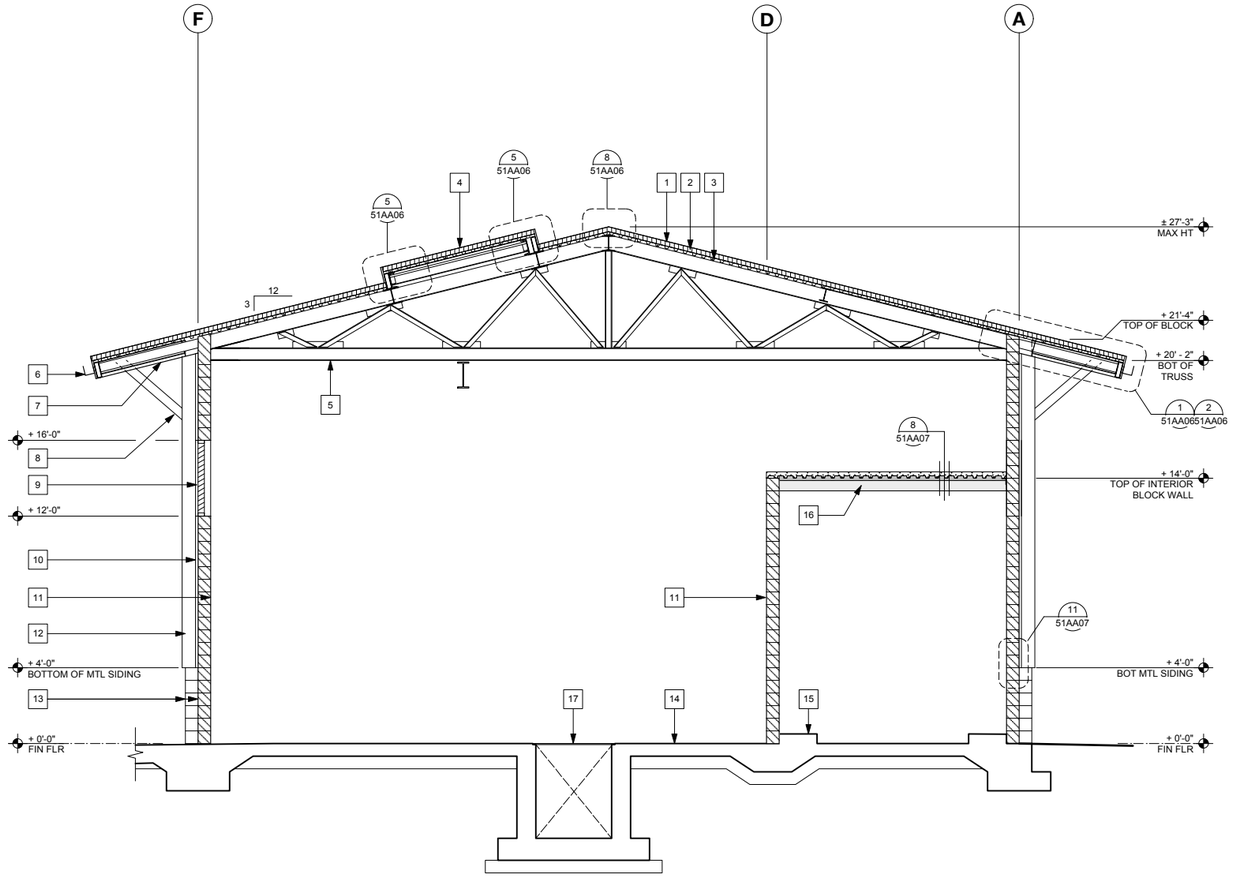

1 SECTION A

SCALE: 1/4" = 1' - 0" 0 5 10 FT

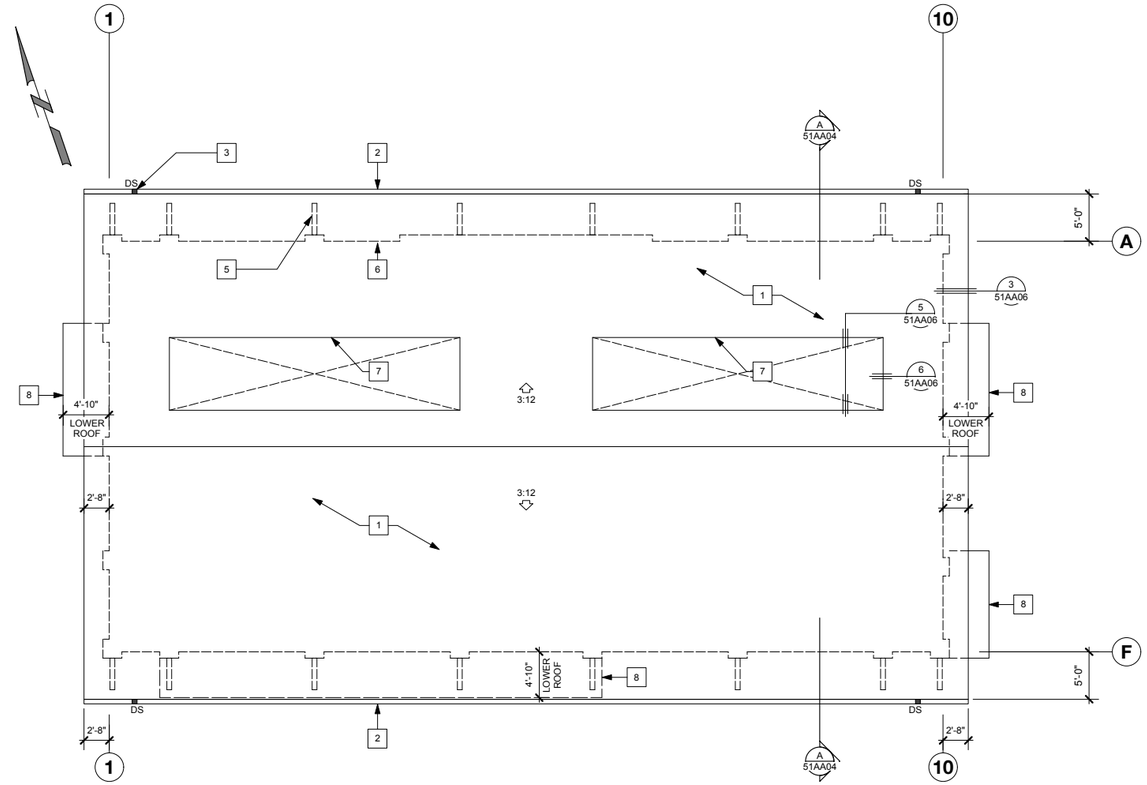

2 ROOF PLAN

SCALE: 1/8" = 1' - 0" 0 5 10 FT

BUILDING SECTION REFERENCE NOTES

1. METAL ROOFING
2. 3" RIGID INSULATION
3. METAL DECK
4. REMOVABLE ROOF PANEL
5. STEEL TRUSS
6. GUTTER
7. STEEL LINER PANEL
8. WOOD OUTRIGGER W/ STEEL BRACKET
9. METAL LOUVERS
10. METAL SIDING (METAL SALES T10-D WALL PROFILE, COLOR: OLD ZINC GREY OR EQUAL)
11. PRECISION CONCRETE BLOCK WALL ABOVE 48" ELEVATION
12. PILASTER BEYOND
13. GROUND FACE SCORED CONCRETE BLOCK WALL TO +48" AFF
14. CONCRETE SLAB
15. CONCRETE EQUIPMENT PAD
16. PAN DECK OVER METAL FRAMING W/ FIRE RESISTANT COATING
17. METAL GRATE OVER CONCRETE TRENCH, SEE STRUCTURAL DRAWINGS FOR BUILDING 51

ROOF REFERENCE NOTES

1. METAL ROOFING
2. 6" WIDE GUTTER
3. DOWNSPOUT
4. NOT USED
5. LINE OF OUTRIGGER BELOW
6. LINE OF BUILDING BELOW
7. REMOVEABLE ROOF SECTION
8. LINE OF LOWER ROOF BELOW

ROOF NOTES

1. **METAL ROOFING**
   24ga 16" flat-pan, vertical standing seam, metal roof panel. Roof shall be installed with applied lap sealant per roof manuf requirements. Roof material shall be Metal Sales GalvAlum or equal
   Corrosion protection shall be AZ50 per ASTM A 792 All fasteners shall be galvanized.
   COLOR: Classic Green

2. **FLASHING**
   All flashing shall be galvanized sheet metal conforming to ASTM B370.
   min gauge: coping = 20 oz
   base = 16 oz
   counter = 16 oz
   valley = 16 oz

3. **GUTTERS & DOWNSPOUTS**
   galvanized, painted gutters, 6"ø, 20 oz, shape per SMACNA Fig 1-3A. COLOR: Classic Green
   Aluminum downspouts, 3" Ø, 06 oz, shape per SMACNA Fig 1-32A.
   Provide wire mesh screens over gutters to prevent accumulation of debris in gutters.

REV	DATE	BY	DESCRIPTION

DESIGNED KH
DRAWN IW
CHECKED FFG
DATE SEPTEMBER 2013

LICENSED ARCHITECT STEVEN D. PULTS C-8611 REN. 06-30-15 STATE OF CALIFORNIA

PULTS Steven D. Pults, AIA & Associates, LLP

carollo

SAN LUIS OBISPO COUNTY

SAN LUIS OBISPO COUNTY
LOS OSOS WATER RECYCLING FACILITY PROJECT
ARCHITECTURAL
DEWATERING BUILDING
ROOF PLAN / BUILDING SECTION

VERIFY SCALES
BAR IS ONE INCH ON ORIGINAL DRAWING
0 1"
IF NOT ONE INCH ON THIS SHEET, ADJUST SCALES ACCORDINGLY

JOB NO. 8930A.11
DRAWING NO. 51AA04
SHEET NO. XXX OF XXX

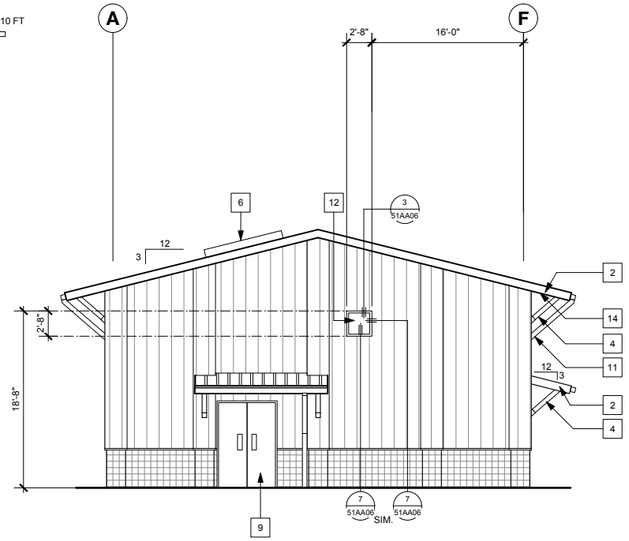

1 EXTERIOR ELEVATION - WEST

SCALE: 1/8" = 1' - 0"
FILE:

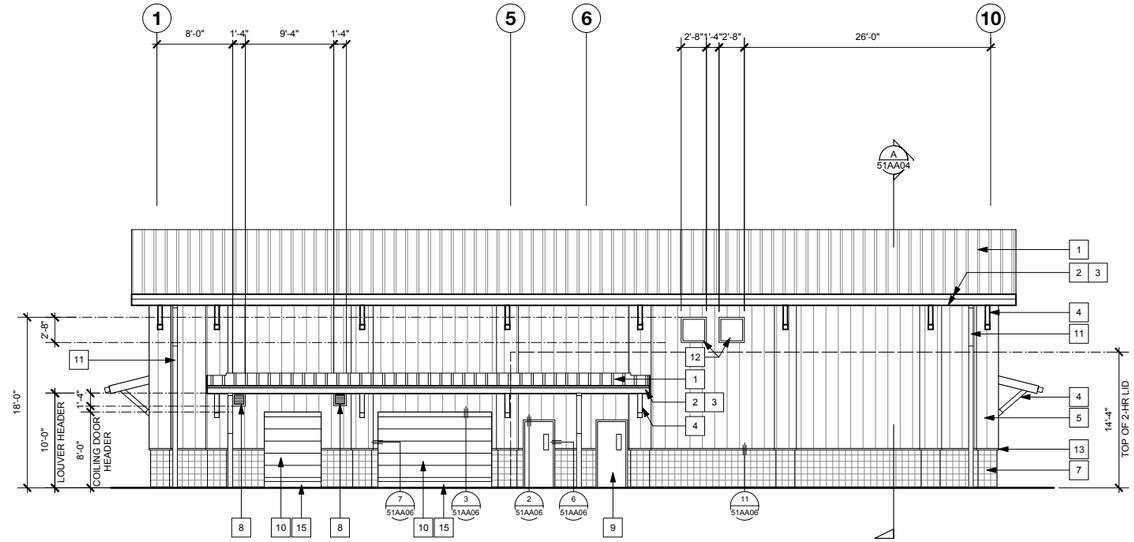

2 EXTERIOR ELEVATION - SOUTH

SCALE: 1/8" = 1' - 0"
FILE:

BUILDING ELEVATION REFERENCE NOTES

1. STANDING SEAM METAL ROOFING,
(METAL SALES VERTICAL SEAM OR EQUAL, COLOR: CLASSIC GREEN)
2. EXPOSED METAL FRAMING & TRIM, (COLOR TO MATCH ROOFING)
3. GUTTER, (COLOR TO MATCH ROOFING)
4. OUTRIGGER, EXPOSED WOOD FINISH
(SUPERDECK SEMI-SOLID STAIN 2750-2850 - MISSION BROWN)
REFER TO STRUCTURAL SHEETS FOR BUILDING 51
5. METAL SIDING, (METAL SALES T10-D PROFILE, OLD ZINC GREY COLOR OR EQUAL)
OVER CMU WALL, (PRECISION BLOCK)
REFER TO STRUCTURAL SHEETS FOR ADDITIONAL INFORMATION
6. REMOVABLE ROOF SECTION.
REFER TO STRUCTURAL SHEETS FOR BUILDING 51
7. SCORED GROUND FACE CONCRETE BLOCK WALL/PILASTER, (GREY COLOR)
PROVIDE WATER-REPELANT COATING ON EXPOSED SIDES PER SPECIFICATION
8. METAL LOUVERED VENT (COLOR: SLATE GREY)
REFER TO MECHANICAL SHEETS FOR BUILDING 51
9. HOLLOW METAL WALK DOOR, (COLOR: SLATE GREY)
10. METAL ROLL-UP DOOR, (COLOR: SLATE GREY)
11. DOWNSPOUT, COLOR TO MATCH METAL SIDING
12. OPENING IN WALL.
REFER TO MECHANICAL SHEETS FOR BUILDING 51
13. METAL TRIM AND ACCENT AT SIDING, OPENINGS AND DOORS, (COLOR: SLATE GREY
14. METAL SOFFIT PANEL,
(METAL SALES T1 PROFILE OR EQUAL, COLOR: WEATHERED COPPER)
15. 8" CONCRETE CURB, SLOPE TOP TO EXTERIOR

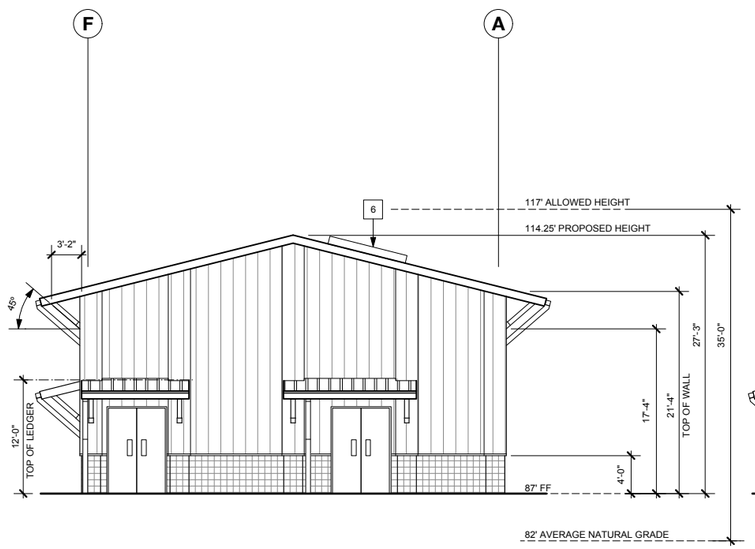

3 EXTERIOR ELEVATION - EAST

SCALE: 1/8" = 1' - 0"
FILE:

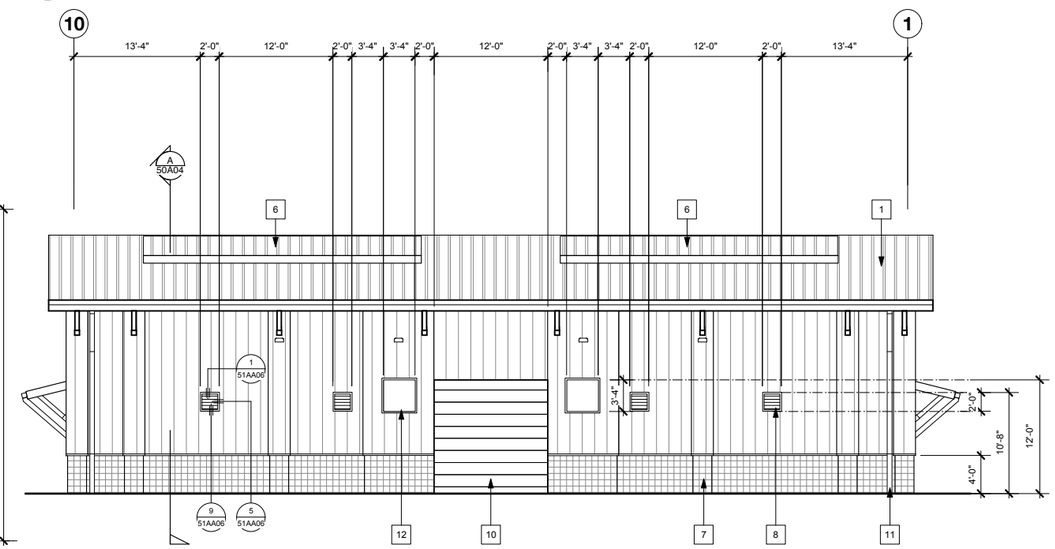

4 EXTERIOR ELEVATION - NORTH

SCALE: 1/8" = 1' - 0"
FILE:

REV	DATE	BY	DESCRIPTION

DESIGNED KH
DRAWN IW
CHECKED FFG
DATE SEPTEMBER 2013

LICENSED ARCHITECT STEVEN D. PULTS No. 8671 REN. 06-30-15 STATE OF CALIFORNIA

PULTS Steven D. Pults, AIA & Associates, LLP

carollo

SAN LUIS OBISPO COUNTY

SAN LUIS OBISPO COUNTY
LOS OSOS WATER RECYCLING FACILITY PROJECT
ARCHITECTURAL
DEWATERING BUILDING
EXTERIOR ELEVATIONS

VERIFY SCALES
BAR IS ONE INCH ON ORIGINAL DRAWING
0 1"
IF NOT ONE INCH ON THIS SHEET, ADJUST SCALES ACCORDINGLY

JOB NO. 8930A.11
DRAWING NO. 51AA05
SHEET NO. XXX OF XXX

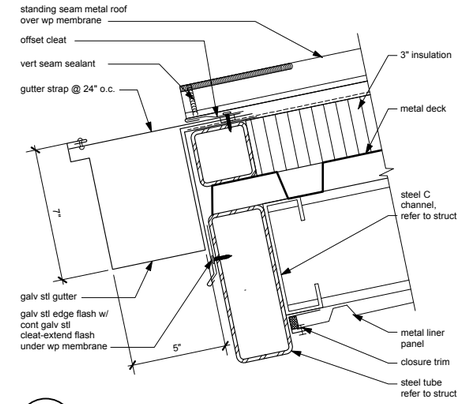

1 **EAVE**
SCALE: 3" = 1' - 0"

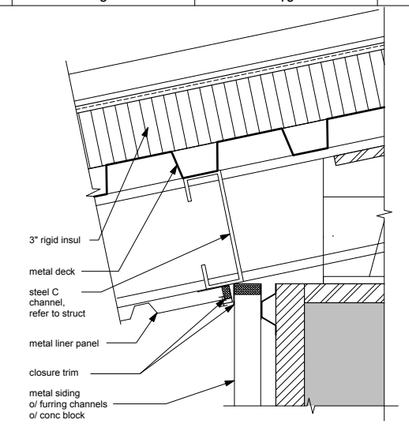

2 **EAVE @ WALL**
SCALE: 3" = 1' - 0"

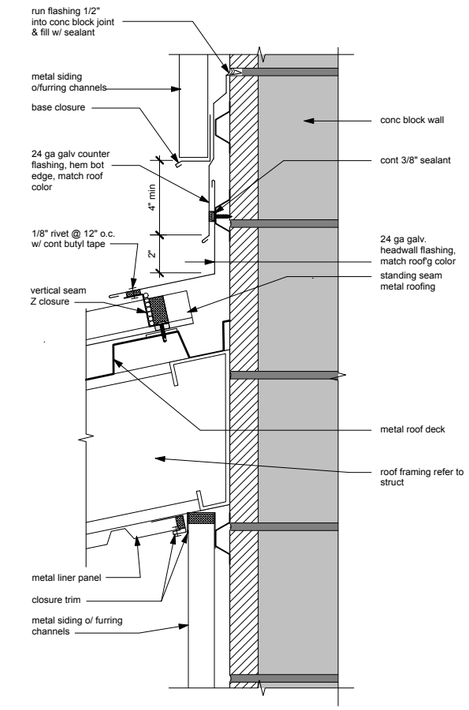

4 **HEADWALL @ CANOPY**
SCALE: 3" = 1' - 0"

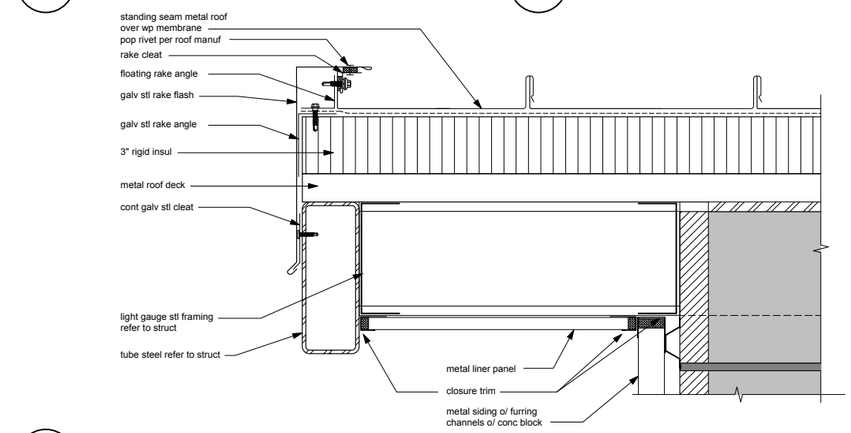

3 **RAKE**
SCALE: 3" = 1' - 0"

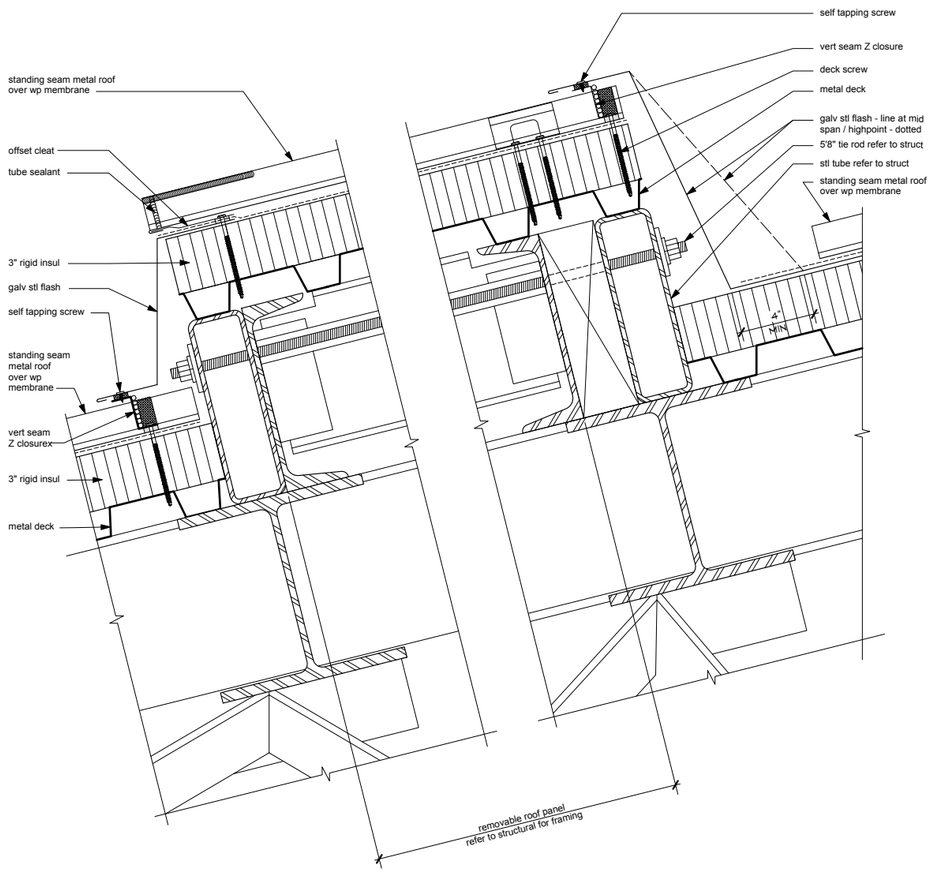

5 **REMOVEABLE ROOF PANEL**
SCALE: 3" = 1' - 0"

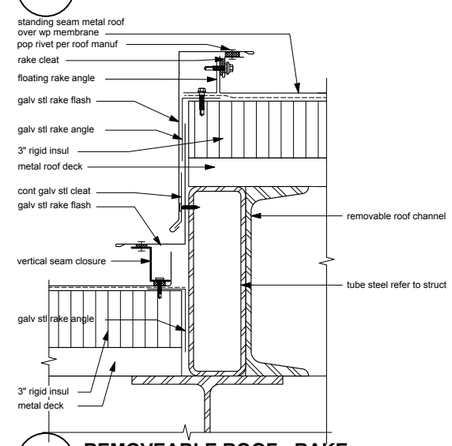

6 **REMOVEABLE ROOF - RAKE**
SCALE: 3" = 1' - 0"

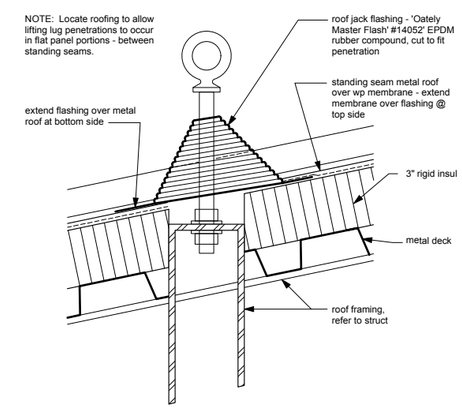

7 **ROOF PENETRATION** · **LIFTING BOLT**
SCALE: 3" = 1' - 0"

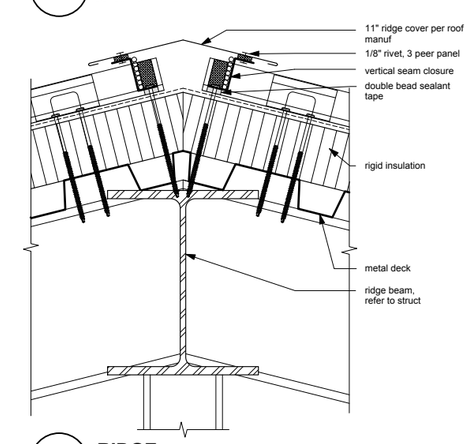

8 **RIDGE**
SCALE: 3" = 1' - 0"

REV	DATE	BY	DESCRIPTION

DESIGNED KH
DRAWN IW
CHECKED FFG
DATE SEPTEMBER 2013

LICENSED ARCHITECT STEVEN D. PULTS LICENSE NO. C-8611 EXP. 06-30-15 STATE OF CALIFORNIA

PULTS Steven D. Pults, AIA & Associates, LLP

carollo

SAN LUIS OBISPO COUNTY

SAN LUIS OBISPO COUNTY
LOS OSOS WATER RECYCLING FACILITY PROJECT
ARCHITECTURAL
DEWATERING BUILDING
ROOF DETAILS

VERIFY SCALES
BAR IS ONE INCH ON ORIGINAL DRAWING
0 1"
IF NOT ONE INCH ON THIS SHEET, ADJUST SCALES ACCORDINGLY

JOB NO. 8930A.11
DRAWING NO. 51AA06
SHEET NO. XXX OF XXX

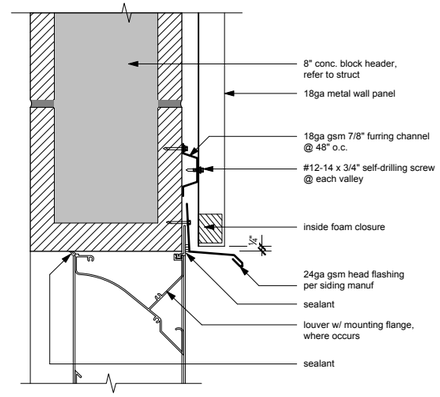

1 **LOUVER HEAD**
SCALE: 3" = 1' - 0"

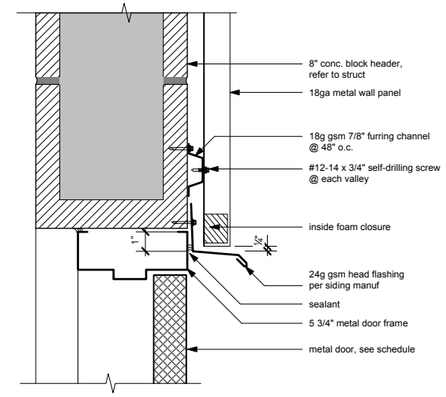

2 **DOOR HEAD**
SCALE: 3" = 1' - 0"

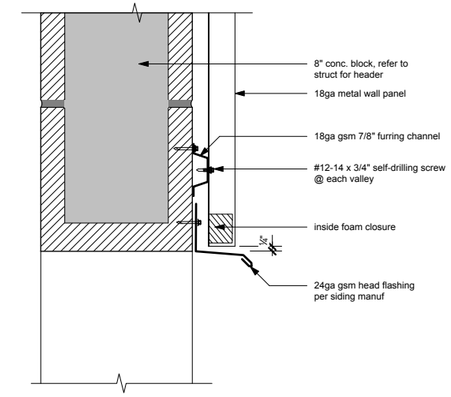

3 **WALL OPENING HEAD**
SCALE: 3" = 1' - 0"

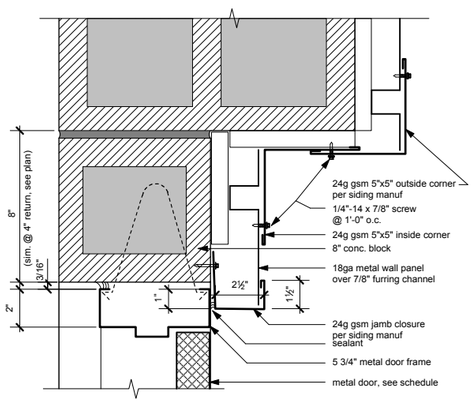

4 **DOOR JAMB @ PILASTER**
SCALE: 3" = 1' - 0"

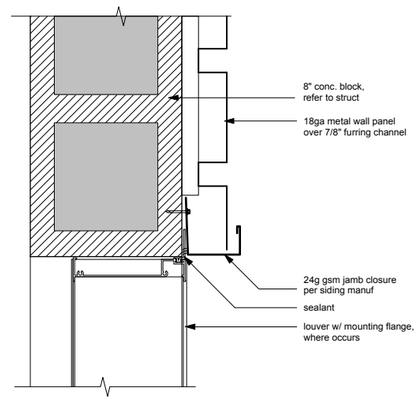

5 **LOUVER JAMB**
SCALE: 3" = 1' - 0"

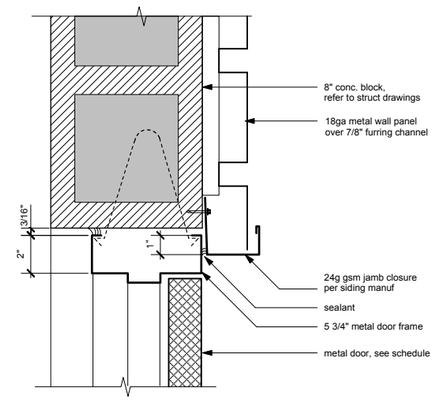

6 **DOOR JAMB**
SCALE: 3" = 1' - 0"

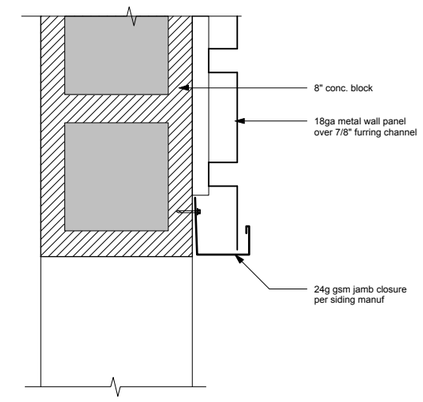

7 **WALL OPENING JAMB (SILL SIM.)**
SCALE: 3" = 1' - 0"

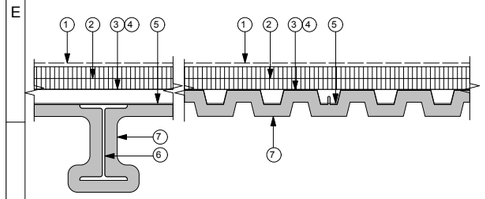

1. Metal roof panels, shown dashed
2. Minimum 2" thick insulation board
3. Adhesive (optional, not shown)
4. Vapor barrier (optional, not shown)
5. Uncoated 1 1/2" metal pan deck
6. Uncoated steel beam, refer to structural drawings for size
7. Spray-applied fire-resistive material, apply min. thickness to acheive 2-hr assembly per manufacturer's recommendations. (3/8" min @ pan decking, 1-1/8" min @ steel beam) W.R.Grace & Co. Intermediate Durability MK10HB or approved equal.

FIRE - 2HR (DESIGN #P701, ANSI/UL 263)

8 **2-hr CEILING ASSEMBLY**
SCALE: N.T.S.

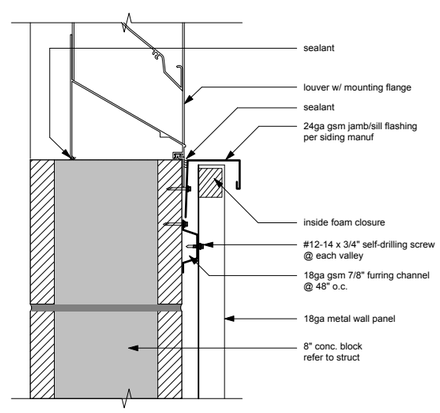

9 **LOUVER SILL**
SCALE: 3" = 1' - 0"

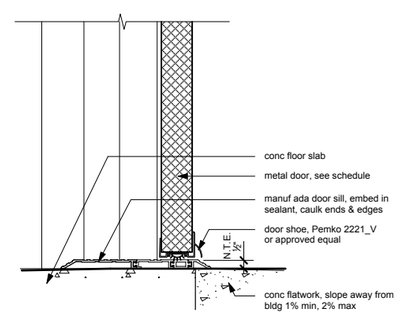

10 **DOOR SILL**
SCALE: 3" = 1' - 0"

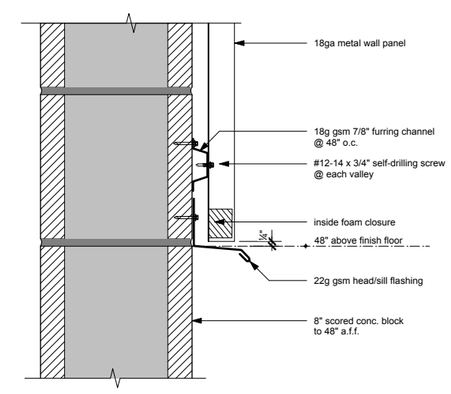

11 **WATER TABLE FLASHING**
SCALE: 3" = 1' - 0"

REV	DATE	BY	DESCRIPTION

DESIGNED KH
DRAWN IW
CHECKED FFG
DATE SEPTEMBER 2013

LICENSED ARCHITECT STEVEN D. PULTS C-18611 REN. 06-30-15 STATE OF CALIFORNIA

PULTS Steven D. Pults, AIA & Associates, LLP

carollo

SAN LUIS OBISPO COUNTY

SAN LUIS OBISPO COUNTY

LOS OSOS WATER RECYCLING FACILITY PROJECT

ARCHITECTURAL
DEWATERING BUILDING
ROOF DETAILS

VERIFY SCALES
BAR IS ONE INCH ON ORIGINAL DRAWING
0 1"
IF NOT ONE INCH ON THIS SHEET, ADJUST SCALES ACCORDINGLY

JOB NO. 8930A.11
DRAWING NO. 51AA07
SHEET NO. XXX OF XXX

NOTE:
RENDERINGS ON THIS SHEET ARE AN ARTISTIC REPRESENTATION OF THE BUILDING, AND ARE PROVIDED FOR REFERENCE ONLY.

REV	DATE	BY	DESCRIPTION

DESIGNED KH
DRAWN IW
CHECKED FFG
DATE SEPTEMBER 2013

LICENSED ARCHITECT STEVEN D. PULTS C-19678 SEN. 06-30-15 STATE OF CALIFORNIA

PULTS Steven D. Pults, AIA & Associates, LLP

carollo

SAN LUIS OBISPO COUNTY

SAN LUIS OBISPO COUNTY

LOS OSOS WATER RECYCLING FACILITY PROJECT

ARCHITECTURAL
ELECTRICAL BUILDING
RENDERING

VERIFY SCALES
BAR IS ONE INCH ON ORIGINAL DRAWING
0 1"
IF NOT ONE INCH ON THIS SHEET, ADJUST SCALES ACCORDINGLY

JOB NO. 8930A.11
DRAWING NO. 70AA00
SHEET NO. XXX OF XXX

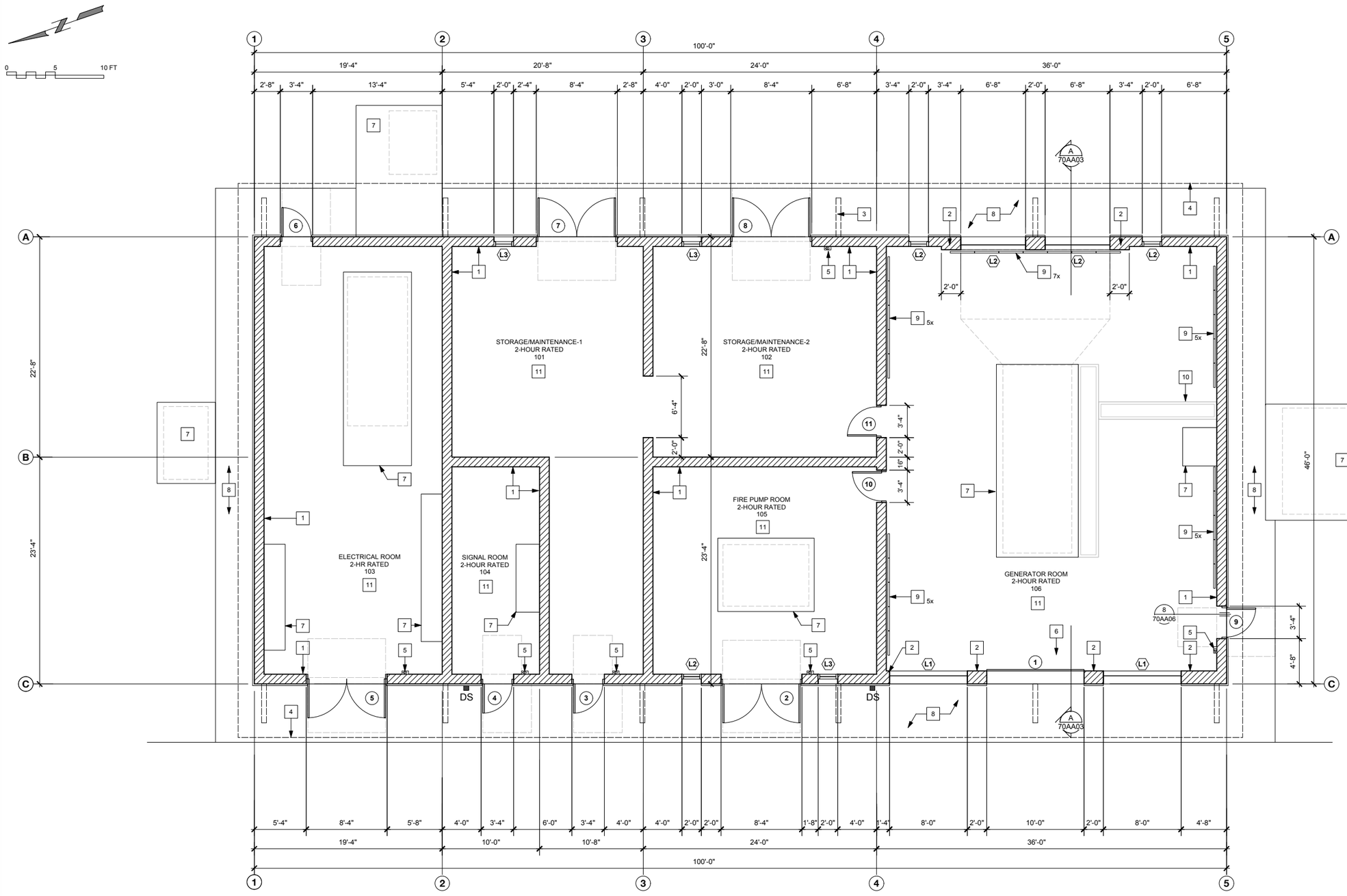

FLOOR PLAN GENERAL NOTES

1. It is the responsibility of the General Contractor to verify all existing conditions prior to construction. Any discrepancies shall be brought to the attention of the Architect.
2. Contractor shall provide a portable 2A10BC fire extinguisher on site during construction.
3. Fire extinguishers shall be 2A10BC in cabinet (Larsen's; Vertical Duo Stainless Steel w/ Lock). Mount at +48" to centerline of valve handle. Refer to floor plan reference notes for location.
3. See Sheet 05AA09 for Door Schedule.
4. See Sheet 05AA10 for Window Schedule.

FLOOR PLAN REFERENCE NOTES

1. 12" CMU WALL
2. 16" CMU WALL/PILASTER
3. LINE OF ROOF KICKER ABOVE
4. LINE OF ROOF ABOVE
5. FIRE EXTINGUISHER, REFER TO GENERAL NOTES
6. OVERHEAD COILING DOOR
7. CONCRETE EQUIPMENT PAD, SEE STRUCTURAL DRAWINGS
   SEE BLDG 70 MECH DRAWINGS FOR EQUIPMENT & PAD SIZES
8. CONCRETE WALKWAY, SEE BLDG 70 STRUCTURAL & CIVIL DRAWINGS
9. 30" x 8'-0" SOUND ABSORPTION PANEL
10. METAL TRENCH GRATES, SEE BLDG 70 STRUCTURAL DRAWINGS
11. PROVIDE 2-HR RATED CEILING PER DETAIL 5/70AA07

BUILDING DATA

BUILDING AREA:	4,600 SF
CONSTRUCTION TYPE:	V-B SPRINKLERED
TRUE BLDG HEIGHT LIMIT:	+27'-3"
OCCUPANCY:	F-1

1 FLOOR PLAN

SCALE: 3/16" = 1' - 0"

REV	DATE	BY	DESCRIPTION

DESIGNED KH
DRAWN IW
CHECKED FFG
DATE SEPTEMBER 2013

LICENSED ARCHITECT STEVEN D. PULTS No. 8611 REN. 06-30-15 STATE OF CALIFORNIA

PULTS Steven D. Pults, AIA & Associates, LLP

carollo

SAN LUIS OBISPO COUNTY

SAN LUIS OBISPO COUNTY
LOS OSOS WATER RECYCLING FACILITY PROJECT
ARCHITECTURAL
ELECTRICAL BUILDING
FLOOR PLAN

VERIFY SCALES
BAR IS ONE INCH ON ORIGINAL DRAWING
0 1"
IF NOT ONE INCH ON THIS SHEET, ADJUST SCALES ACCORDINGLY

JOB NO. 8930A.11
DRAWING NO. 70AA01
SHEET NO. XXX OF XXX

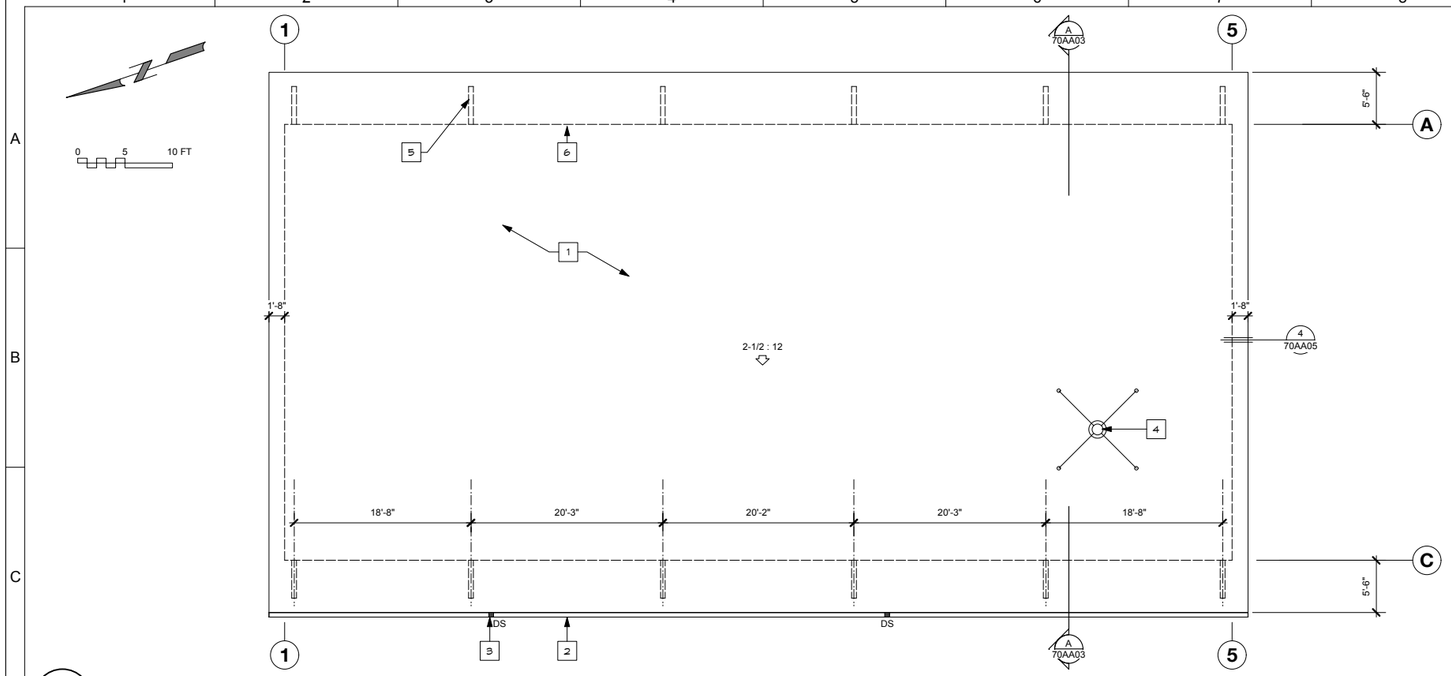

1 ROOF PLAN

SCALE: 1/8" = 1' - 0"

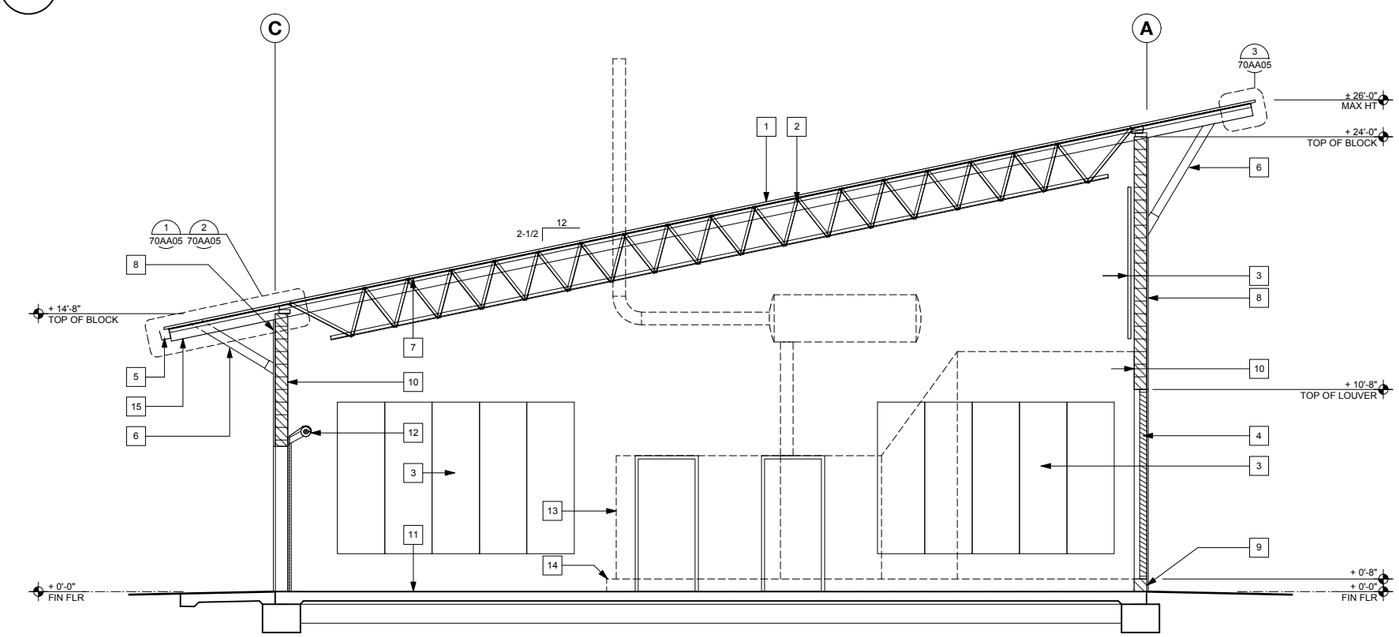

2 SECTION A

SCALE: 1/4" = 1' - 0"

0 5 10 FT

ROOF REFERENCE NOTES

1. METAL ROOFING
2. GALV MTL GUTTER
3. DOWNSPOUT
4. GENERATOR EXHAUST, SEE MECH DRAWINGS
5. LINE OF OUTRIGGER BELOW
6. LINE OF BUILDING BELOW

ROOF NOTES

1. **METAL ROOFING**
   24ga 16" flat-pan, vertical standing seam, metal roof panel. Roof shall be installed with applied lap sealant per roof manuf requirements. Roof material shall be Metal Sales GalvAlum or equal
   Corrosion protection shall be AZ50 per ASTM A 792 All fasteners shall be galvanized.
   COLOR: Mistigue Plas

2. **FLASHING**
   All flashing shall be galvanized sheet metal conforming to ASTM B370.
   min gauge: coping = 20 oz
   base = 16 oz
   counter = 16 oz
   valley = 16 oz

3. **GUTTERS & DOWNSPOUTS**
   galvanized, painted gutters, 6"ø, 20 oz, shape per SMACNA Fig 1-3A. COLOR: Mistigue Plas
   Aluminum downspouts, 3" Ø, 06 oz, shape per SMACNA Fig 1-32A.
   Provide wire mesh screens over gutters to prevent accumulation of debris in gutters.

BUILDING SECTION REFERENCE NOTES

1. METAL ROOFING
2. METAL DECK OVER STEEL TRUSSES
3. 30" x 8'-0" SOUND ABSORPTION PANELS
4. METAL LOUVERS
5. GALV MTL GUTTER
6. WOOD OUTRIGGER W/ STEEL BRACKET
7. SPRAY-APPLIED FIRE RESISTANT MATERIAL
8. METAL SIDING (METAL SALES T10-C PANEL PROFILE, COLOR: TERRA COTTA OR EQUAL)
9. GROUND FACE SCORED CONCRETE BLOCK WALL TO +48" AFF
10. PRECISION CONCRETE BLOCK WALL (BEHIND MTL SIDING AREAS) ABOVE 48" ELEVATION
11. CONCRETE SLAB, SEE STRUCTURAL DRAWINGS
12. OVERHEAD COILING DOOR
13. EQUIMPMENT SHOWN DASHED, SEE MECH DRAWINGS FOR SIZES
14. CONCRETE EQUIPMENT PAD, SEE MECH DRAWINGS FOR SIZE
15. METAL SOFFIT LINER PANEL

REV	DATE	BY	DESCRIPTION

DESIGNED KH
DRAWN IW
CHECKED FFG
DATE SEPTEMBER 2013

LICENSED ARCHITECT STEVEN D. PULTS No. 8671 REN. 06-30-15 STATE OF CALIFORNIA

PULTS Steven D. Pults, AIA & Associates, LLP

carollo

SAN LUIS OBISPO COUNTY

SAN LUIS OBISPO COUNTY
LOS OSOS WATER RECYCLING FACILITY PROJECT
ARCHITECTURAL
ELECTRICAL BUILDING
ROOF PLAN / BUILDING SECTION

VERIFY SCALES
BAR IS ONE INCH ON ORIGINAL DRAWING
0 1"
IF NOT ONE INCH ON THIS SHEET, ADJUST SCALES ACCORDINGLY

JOB NO. 8930A.11
DRAWING NO. 70AA03
SHEET NO. XXX OF XXX

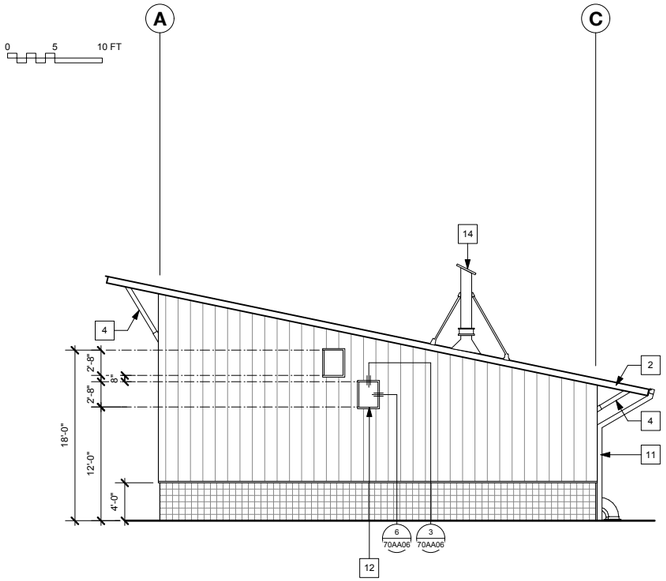

1 EXTERIOR ELEVATION - NORTH

SCALE: 1/8" = 1' - 0"
FILE:

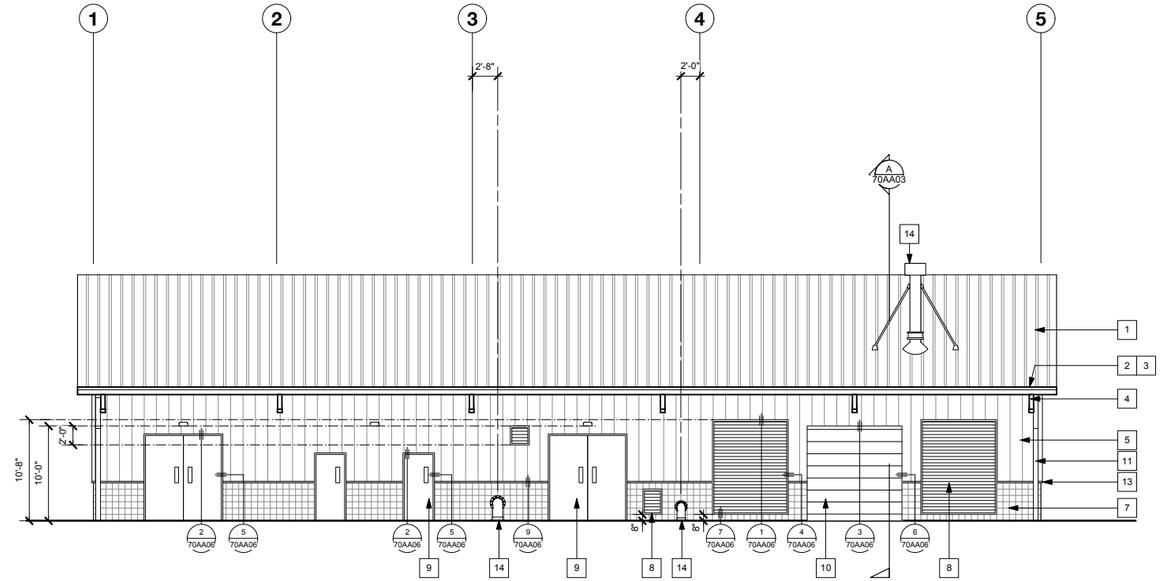

2 EXTERIOR ELEVATION - WEST

SCALE: 1/8" = 1' - 0"
FILE:

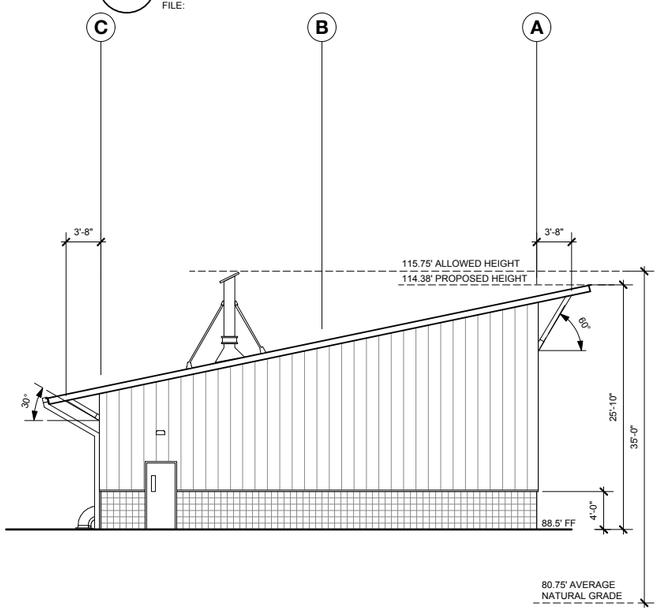

3 EXTERIOR ELEVATION - SOUTH

SCALE: 1/8" = 1' - 0"
FILE:

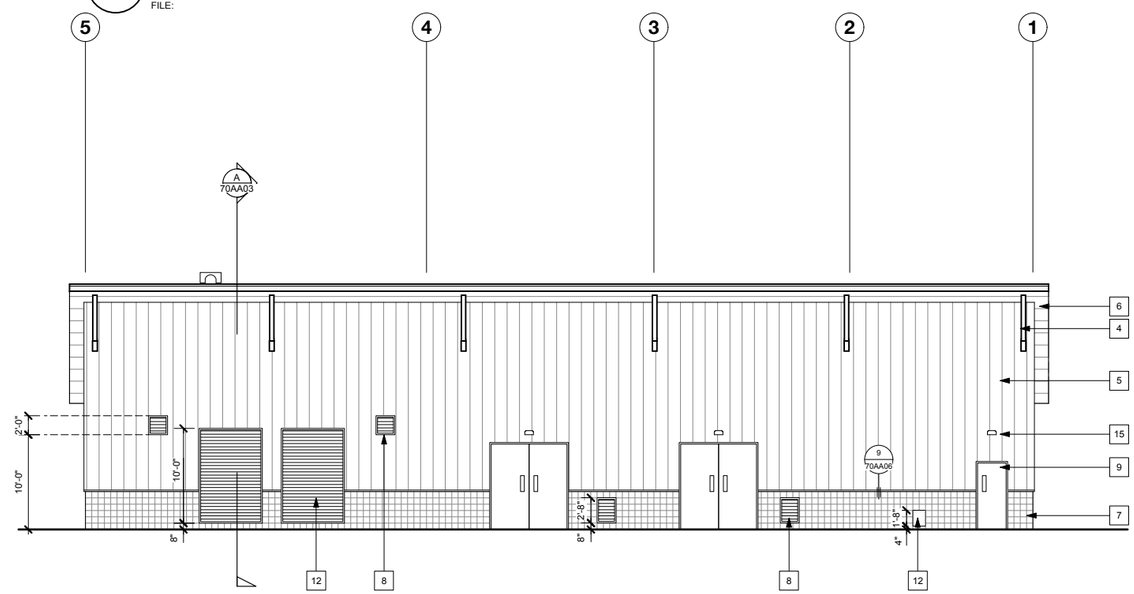

4 EXTERIOR ELEVATION - EAST

SCALE: 1/8" = 1' - 0"
FILE:

BUILDING ELEVATION REFERENCE NOTES

1. STANDING SEAM METAL ROOFING, (METAL SALES VERTICAL SEAM OR EQUAL, MISTIGUE PLAS COLOR)
2. EXPOSED METAL FRAMING & TRIM, (COLOR TO MATCH ROOFING)
3. GUTTER, (COLOR TO MATCH ROOFING)
4. OUTRIGGER, EXPOSED WOOD FINISH (SUPERDECK SEMI-SOLID STAIN 2750-2850 - MISSION BROWN) REFER TO BLDG 70 STRUCTURAL SHEETS
5. METAL SIDING, (METAL SALES T10-C PROFILE, TERRA COTTA COLOR OR EQUAL) OVER CMU WALL, (PRECISION BLOCK)
6. METAL SOFFIT PANEL, (METAL SALES T1 PROFILE OR EQUAL, WEATHERED COPPER COLOR)
7. SCORED GROUND FACE CONCRETE BLOCK WALL/PILASTER, (GREY COLOR) WITH WATER-REPELANT COATING ON EXPOSED SIDES PER SPECIFICATION
8. METAL LOUVERED VENT, SLATE GREY COLOR REFER TO BLDG 70 MECHANICAL SHEETS
9. HOLLOW METAL WALK DOOR, (SLATE GREY)
10. METAL ROLL-UP DOOR, (SLATE GREY)
11. DOWNSPOUT, COLOR TO MATCH METAL SIDING
12. OPENING IN WALL. REFER TO BLDG 70 MECHANICAL SHEETS
13. METAL TRIM AND ACCENT AT SIDING, OPENINGS AND DOORS, (SLATE GREY)
14. MECHANICAL/PLUMBING EQUIPMENT, REFER TO BLDG 70 MECH AND PLUMB SHEETS
15. LIGHT FIXTURE, REFER TO BLDG 70 ELECTRICAL SHEETS

REV	DATE	BY	DESCRIPTION

DESIGNED KH
DRAWN IW
CHECKED FFG
DATE SEPTEMBER 2013

LICENSED ARCHITECT STEVEN D. PULTS C-8611 EXP. 06-30-15 STATE OF CALIFORNIA

PULTS Steven D. Pults, AIA & Associates, LLP

carollo

SAN LUIS OBISPO COUNTY

SAN LUIS OBISPO COUNTY
LOS OSOS WATER RECYCLING FACILITY PROJECT
ARCHITECTURAL
ELECTRICAL BUILDING
EXTERIOR ELEVATIONS

VERIFY SCALES
BAR IS ONE INCH ON ORIGINAL DRAWING
0 1"
IF NOT ONE INCH ON THIS SHEET, ADJUST SCALES ACCORDINGLY

JOB NO. 8930A.11
DRAWING NO. 70AA04
SHEET NO. XXX OF XXX

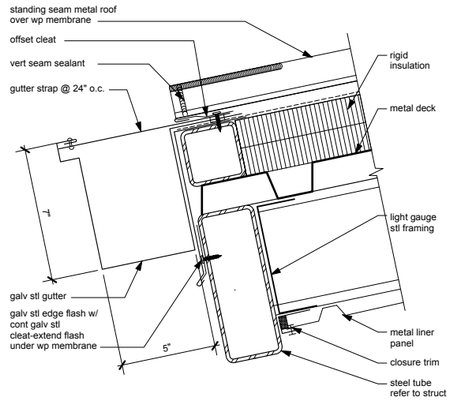

1 EAVE @ GUTTER

SCALE: 1 1/2" = 1' - 0"

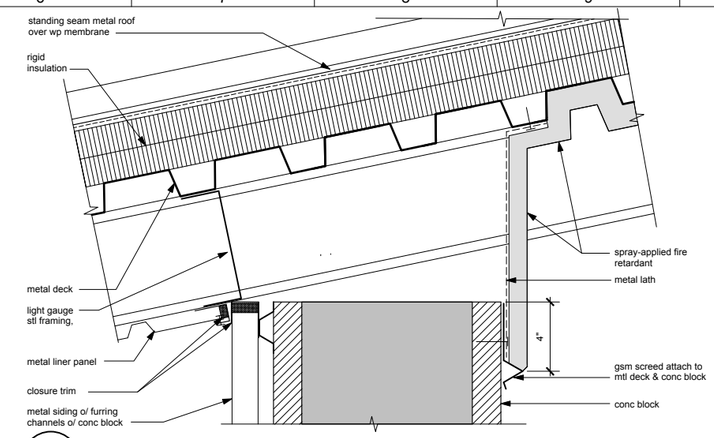

2 EAVE @ WALL

SCALE: 1 1/2" = 1' - 0"

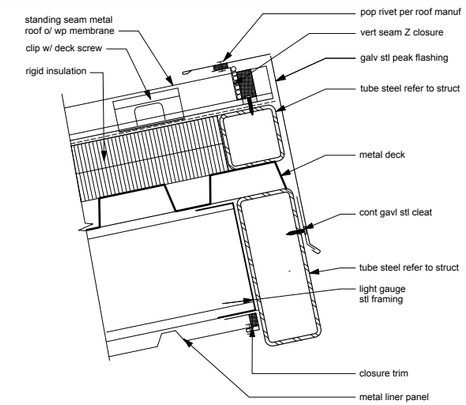

3 PEAK

SCALE: 1 1/2" = 1' - 0"

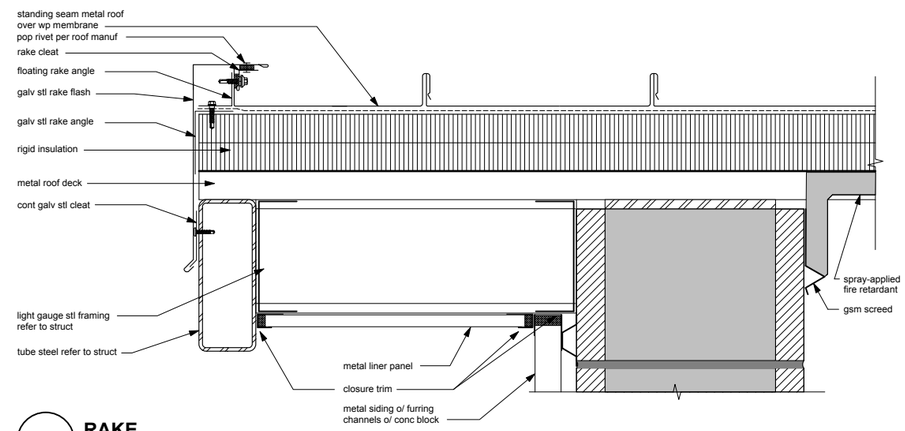

4 RAKE

SCALE: 3" = 1' - 0"

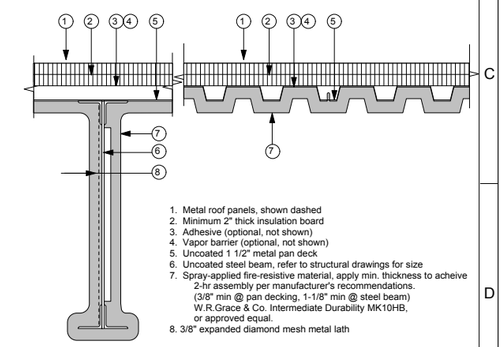

1. Metal roof panels, shown dashed
2. Minimum 2" thick insulation board
3. Adhesive (optional, not shown)
4. Vapor barrier (optional, not shown)
5. Uncoated 1 1/2" metal pan deck
6. Uncoated steel beam, refer to structural drawings for size
7. Spray-applied fire-resistive material, apply min. thickness to acheive 2-hr assembly per manufacturer's recommendations. (3/8" min @ pan decking, 1-1/8" min @ steel beam) W.R.Grace & Co. Intermediate Durability MK10HB, or approved equal.
8. 3/8" expanded diamond mesh metal lath

FIRE - 2HR (DESIGN #P701, ANSI/UL 263)

5 2-hr ROOF ASSEMBLY

SCALE: N.T.S.

REV	DATE	BY	DESCRIPTION

DESIGNED KH
DRAWN IW
CHECKED FFG
DATE SEPTEMBER 2013

LICENSED ARCHITECT STEVEN D. PULTS C-8611 REN. 06-30-15 STATE OF CALIFORNIA

PULTS Steven D. Pults, AIA & Associates, LLP

carollo

SAN LUIS OBISPO COUNTY

SAN LUIS OBISPO COUNTY

LOS OSOS WATER RECYCLING FACILITY PROJECT

ARCHITECTURAL
ELECTRICAL
ROOF DETAILS

VERIFY SCALES
BAR IS ONE INCH ON ORIGINAL DRAWING
0 1"
IF NOT ONE INCH ON THIS SHEET, ADJUST SCALES ACCORDINGLY

JOB NO. 8930A.11
DRAWING NO. 70AA05
SHEET NO. XXX OF XXX

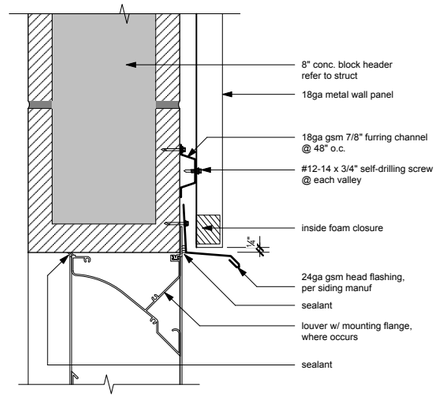

1 LOUVER HEAD
SCALE: 3" = 1' - 0"

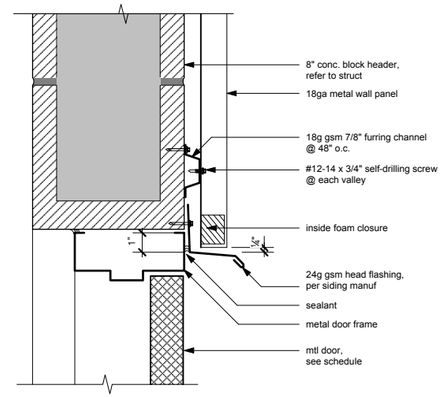

2 DOOR HEAD
SCALE: 3" = 1' - 0"

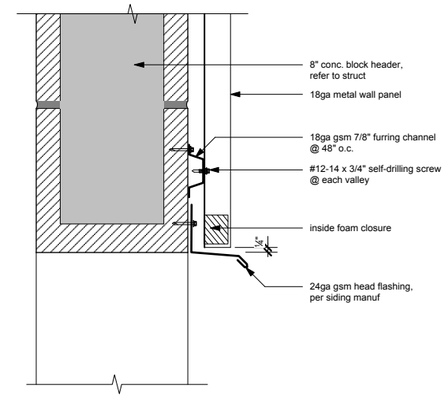

3 WALL OPENING HEAD
SCALE: 3" = 1' - 0"

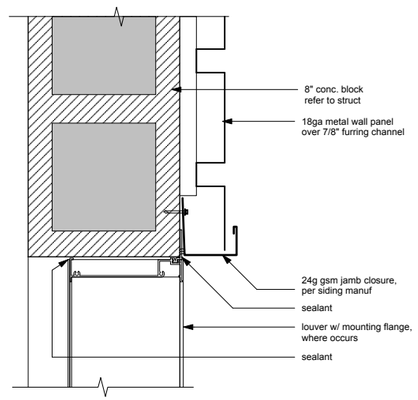

4 LOUVER JAMB
SCALE: 3" = 1' - 0"

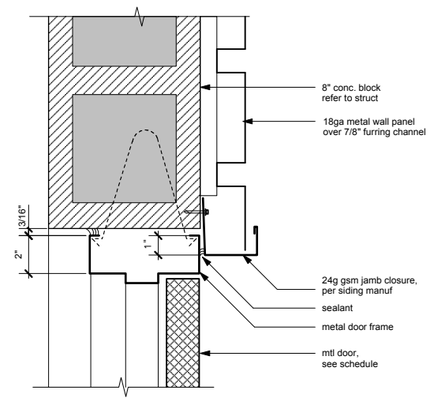

5 DOOR JAMB
SCALE: 3" = 1' - 0"

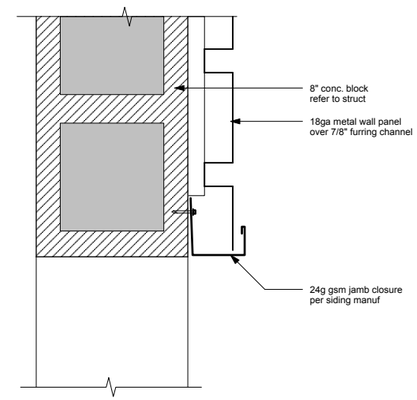

6 WALL OPENING JAMB (SILL SIM.)
SCALE: 3" = 1' - 0"

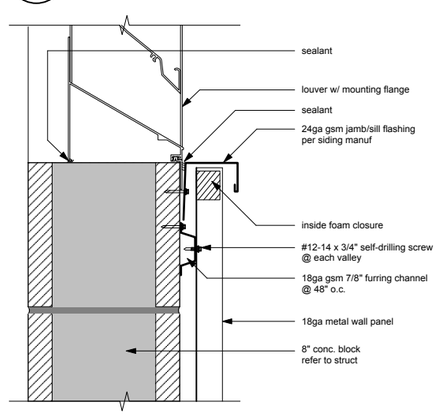

7 LOUVER SILL
SCALE: 3" = 1' - 0"

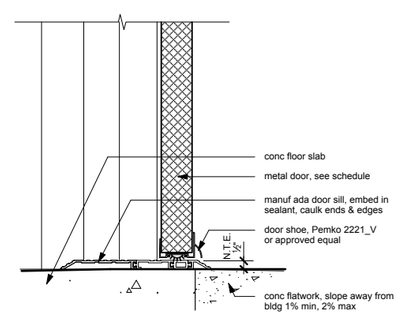

8 DOOR SILL
SCALE: 3" = 1' - 0"

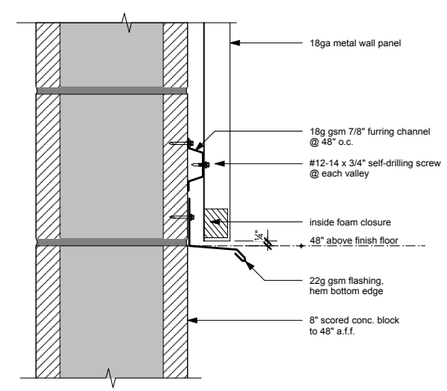

9 WATER TABLE FLASHING
SCALE: 3" = 1' - 0"

REV	DATE	BY	DESCRIPTION

DESIGNED KH
DRAWN IW
CHECKED FFG
DATE SEPTEMBER 2013

LICENSED ARCHITECT STEVEN D. PULTS NPPS 8611 REN. 06-30-15 STATE OF CALIFORNIA

PULTS Steven D. Pults, AIA & Associates, LLP

carollo

SAN LUIS OBISPO COUNTY

SAN LUIS OBISPO COUNTY

LOS OSOS WATER RECYCLING FACILITY PROJECT

ARCHITECTURAL
ELECTRICAL BUILDING
WALL DETAILS

VERIFY SCALES
BAR IS ONE INCH ON ORIGINAL DRAWING
0 1"
IF NOT ONE INCH ON THIS SHEET, ADJUST SCALES ACCORDINGLY

JOB NO. 8930A.11
DRAWING NO. 70AA06
SHEET NO. XXX OF XXX

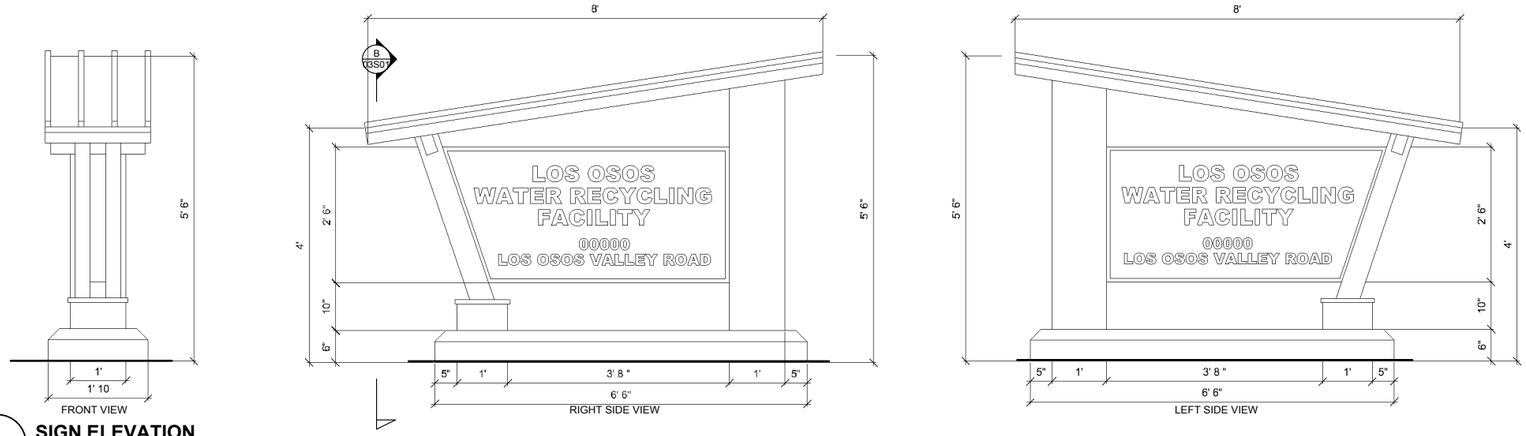

1 **SIGN ELEVATION**
SCALE: 3/4" = 1' - 0"

2 **SIGN PERSPECTIVE (rendering)**
SCALE: NTS

Note:
All finishes to match Administration Building.
Exposed wood shall be finished with
Superdeck Semi-Solid Stain, Mission Brown 2750-2850.
Plaster texture shall be smooth and painted Behr Peanut Butter 270F-4.

standing seam metal roof "Galvalume" finish to match Administration bldg.

timber framing (refer to structural sheet 03S01)

timber soffit (refer to structural sheet 03S01)

individual metal letters 4" tall with 1" standoff, Dark Bronze finish.

metal backboard "Galvalume" finish to match Administration bldg. (refer to structural sheet 03S01)

individual metal letters 3" tall with 1" standoff, Dark Bronze finish.

plastered CMU column (refer to structural sheet 03S01)

concrete base & footing (refer to structural sheet 03S01)

plastered CMU column w/ concrete cap. (refer to structural sheet 03S01)

3 **SIGN MATERIALS**
SCALE: NTS

REV	DATE	BY	DESCRIPTION

DESIGNED KH
DRAWN IW
CHECKED FFG
DATE SEPTEMBER 2013

LICENSED ARCHITECT STEVEN D. PULTS NO. 8611 REN. 06-30-15 STATE OF CALIFORNIA

PULTS Steven D. Pults, AIA & Associates, LLP

carollo

SAN LUIS OBISPO COUNTY

SAN LUIS OBISPO COUNTY
LOS OSOS WATER RECYCLING FACILITY PROJECT
ARCHITECTURAL
GENERAL SITE
ENTRANCE SIGN DETAILS

VERIFY SCALES
BAR IS ONE INCH ON ORIGINAL DRAWING
0 1"
IF NOT ONE INCH ON THIS SHEET, ADJUST SCALES ACCORDINGLY

JOB NO. 8930A.11
DRAWING NO. 80AA01
SHEET NO. XXX OF XXX

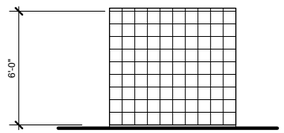

SIDE

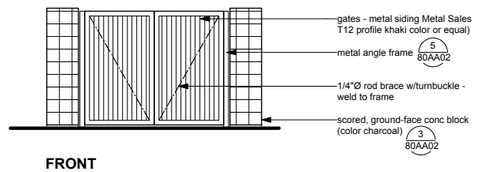

FRONT

TRASH ENCLOSURE NOTES:
1. Provide exterior rated signs;
   Sign D - RECYLE MATERIALS ONLY
   Sign E - FOR GARBAGE ONLY
2. Provide 3/4"ø steel cane bolt at pair of gates, w/ welded stop pin, backing plate, stop pin rest, and 1 1/4" ID steel pipe x 6" deep cane slot

1 TRASH ENCLOSURE ELEVATIONS
SCALE: 1/4" = 1' - 0"

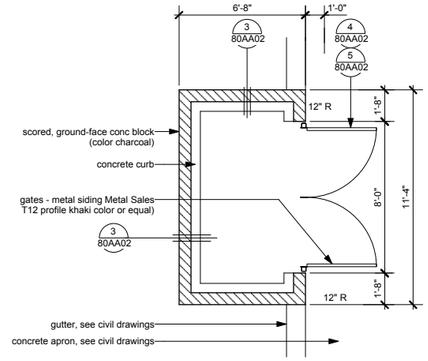

2 TRASH ENCLOSURE PLAN
SCALE: 1/4" = 1' - 0"

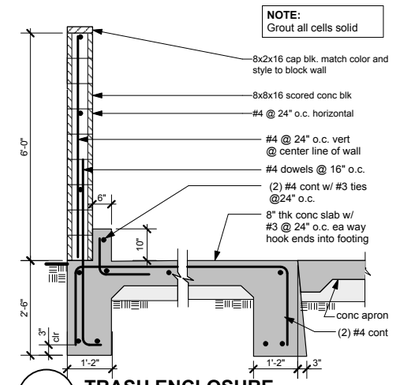

3 TRASH ENCLOSURE
SCALE: 1/2" = 1' - 0"

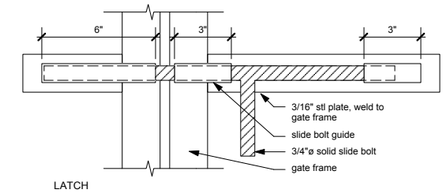

4 GATE LATCH
SCALE: 3" = 1' - 0"

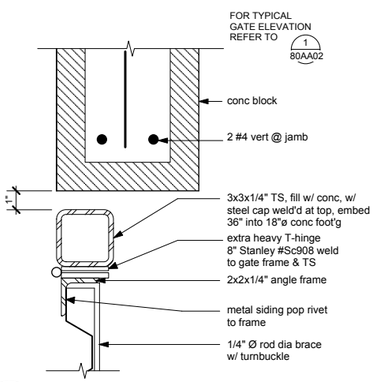

5 GATE HINGE
SCALE: 3" = 1' - 0"

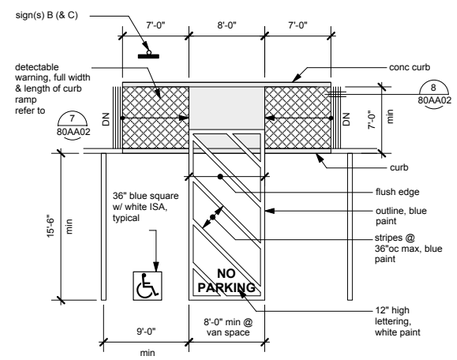

6 ACCESSIBLE PARKING STALL
SCALE: NTS

SIGN A

The following sign shall be posted in a conspicuous place at each entrance to off-street parking facilities, or immediately adjacent to and visible from each stall or space :
A 22" x 17" ground sign with 1" high letters to read,
"UNAUTHORIZED VEHICLES PARKED IN DESIGNATED ACCESSIBLE SPACES NOT DISPLAYING DISTINGUISHING PLACARDS OR SPECIAL LICENSE PLATES ISSUED FOR PERSONS WITH DISABILITIES WILL BE TOWED AWAY AT THE OWNER'S EXPENSE. TOWED VEHICLES MAY BE RECLAIMED AT _____ OR BY TELEPHONING _____." Blank spaces must be filled in with 1" min high lettering.

SIGN B

70" square inches, International Symbol of Accessibility (ISA) and a sign below stating "MINIMUM FINE $250". Bottom of lowest sign shall be mounted at +80" above finish grade for free standing pole signs, or +60" above finish grade on building surface (when building adjacency occurs).

SIGN C

"**VAN ACCESSIBLE**" sign, 1" high letters mounted between the two signs for sign "B", bottom of lowest sign shall be mounted at +80" above finish grade for free standing pole signs, or at +60" above finish grade on building surface (when building adjacency occurs).

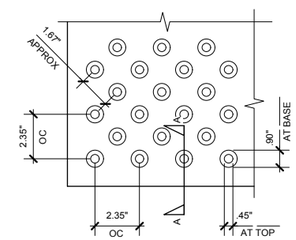

TYPICAL PLAN

NOTE:
domes & backing in locations other than curb ramps, shall be safety yellow color, and shall contrast with adjacent surface material. if color value contrast is less than 70%, provide 1" black stripe at edge to walking surface, material shall differ from adjacent walk surface w/ sound-on-cane contact.

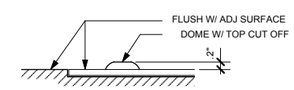

TYPICAL SECTION A-A (6" SCALE)

7 TRUNCATED DOMES
SCALE: 3" = 1' - 0"

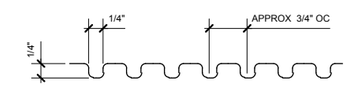

GROOVED BORDER SECTION

NOTE:

1. All curb ramps shall have a grooved border 12 inches wide at the level surface of the sidewalk along the top and across the flared sides as shown.
2. Finish surface of each ramp and it's flared sides shall be slip-resistant, medium broom finish, brush perpendicular to slope. Curb ramps shall have tactile warning for full ramp width and depth, excluding flared sides.
3. Tactile warning material shall be visually contrasting to adjacent surfaces, either light-on-dark or dark-on-light. The rows of domes shall be aligned to be perpendicular to the ramp slope.

8 CURB RAMPS
SCALE: NTS

REV	DATE	BY	DESCRIPTION

DESIGNED KH
DRAWN IW
CHECKED FFG
DATE SEPTEMBER 2013

LICENSED ARCHITECT STEVEN D. PULTS C-18861 REN. 06-30-15 STATE OF CALIFORNIA

PULTS Steven D. Pults, AIA & Associates, LLP

carollo

SAN LUIS OBISPO COUNTY

SAN LUIS OBISPO COUNTY
LOS OSOS WATER RECYCLING FACILITY PROJECT
ARCHITECTURAL
GENERAL SITE
SITE DETAILS

VERIFY SCALES
BAR IS ONE INCH ON ORIGINAL DRAWING
0 1"
IF NOT ONE INCH ON THIS SHEET, ADJUST SCALES ACCORDINGLY

JOB NO. 8930A.11
DRAWING NO. 80AA02
SHEET NO. XXX OF XXX

NOTE: WHEN CALCULATING THE NECESSARY GROUND COVER QUANTITIES, THE CONTRACTOR SHOULD TAKE INTO CONSIDERATION THAT THE DRAWING INDICATES THE 2:1 SLOPES IN PLAN VIEW. THE HYPOTENUSE SIDE OF THE TRIANGLE IS THE ACTUAL SLOPE DEMENSION TO BE USED. PLEASE REFER TO DRAWING.

20' (leg) 45' (hypotenuse) 40' (leg)

EXAMPLE SECTION

0 50 100 FT

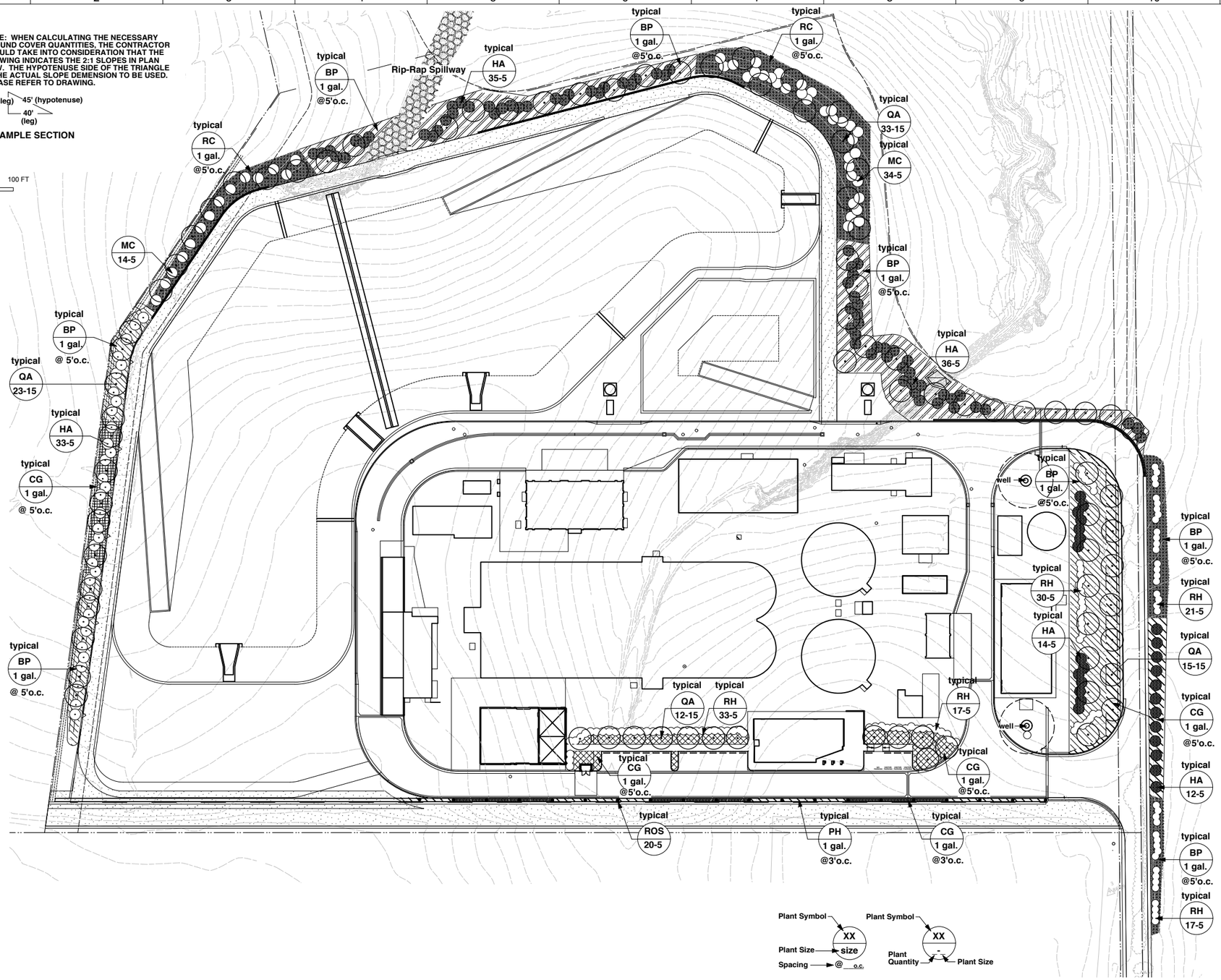

Planting Legend

Symbol	Botanical Name/Common Name	Size/Caliper	* Est. Quanities
Trees			
QA	Quercus agrifolia/Coast Live Oak	15 gal./Min. 1"	83 - 15 gal.

Symbol	Botanical Name/Common Name	Size/Spacing	
Shrubs			
HA	Heteromeles arbutifolia/Toyon	5 gal./ as shown	130 - 5 gal.
MC	Myrica californica/Pacific Wax Myrtle	5 gal./ as shown	48 - 5 gal.
ROS	Rosa californica/Wild Calif. Rose	5 gal./ as shown	29 - 5 gal.
RH	Rhamnus californica 'Eve Case'/Calif. Coffeeberry	5 gal./ as shown	118 - 5 gal.

Symbol	Botanical Name/Common Name	Size/Spacing	
Ground Covers			
BP	Baccharia pil. 'Twin Peaks'/Pros. Coyote Bush	1 gal./ as shown	1,484 - 1 gal.
CG	Ceanothus gloriosus porrectus/NCN	1 gal./ as shown	641 - 1 gal.
MA	Mimulus aurantiacus/Sticky Monkey Flower	1 gal./ as shown	8 - 1 gal.
PH	Penstemon heterophyllus/Beard Tongue	1 gal./ as shown	109 - 1 gal.
RC	Rhamnus calif. 'Seaview'/Calif. Coffeeberry	1 gal./ as shown	492 - 1 gal.

Note: Graphic symbols of individual plants may vary. Refer to the plant "bubbles".

* All plant quantities shall be verified by bidders prior to submitting their bids.

Important Planting Note:
All Landscape Contractors that are bidding this project should review the Storm Water Protection Plans (SWPP), prior to submitting their bids. All of the specified protection measures shall remain in place permanently. All of the proposed slope plantings shown on this sheet shall be planted through the specified geotextile blanket. Any questions concerning this process should be addressed prior to submitting bids.

LEGENDS FOR "PLANT BUBBLES"

NOTE: THE ENTRY PLANTINGS SHALL BE HAND WATERED BY THE COUNTY DURING A 3 YEAR ESTABLISHMENT PERIOD. THIS SHALL COMMENCE AFTER THE CONTRATOR'S SPECIFIED MAINTENANCE PERIOD IS COMPLETE. ALL OF THE PROJECT SPECIFICATIONS SHALL APPLY TO THIS AREA EXCEPT FOR THOSE REFERING TO A PERMANENT IRRIGAITON SYSTEM. ALL OF THE PLANTINGS IN THIS AREA SHALL HAVE WATERING BASINS AROUND EACH PLANT TO HELP FACILITATE THIS HAND WATERING PROCESS.

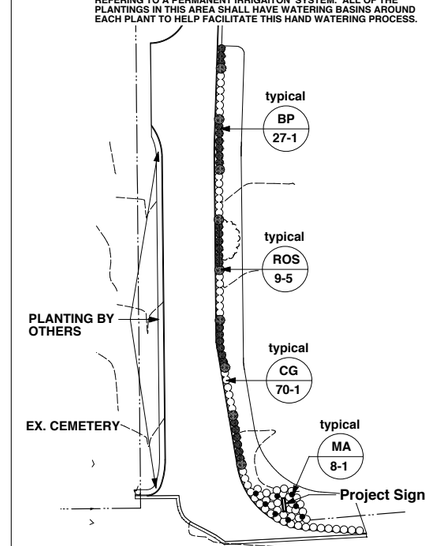

FACILITY PLANTING PLAN
SCALE: 1" = 50' - 0"

ENTRY PLANTING PLAN
SCALE: 1" = 50' - 0"

REV	DATE	BY	DESCRIPTION

DESIGNED SC
DRAWN SC
CHECKED SC
DATE SEPTEMBER 2013

LICENSED LANDSCAPE ARCHITECT STEVEN P. CAMINITI No. 1941 RENEWAL 11/13 STATE OF CALIFORNIA

STEVEN P. CAMINITI
CAL. LIC. NO. 1941
LANDSCAPE ARCHITECTURE, ETCETERA
P.O. BOX 1247, SAN LUIS OBISPO, CA. 93406
805/544-8429 FAX 544-8443
EMAIL: stevenpc@charter.net

carollo

SAN LUIS OBISPO COUNTY

SAN LUIS OBISPO COUNTY

LOS OSOS WATER RECYCLING FACILITY PROJECT

LANDSCAPE
GENERAL SITE
PLANTING PLAN

VERIFY SCALES
BAR IS ONE INCH ON ORIGINAL DRAWING
0 1"
IF NOT ONE INCH ON THIS SHEET, ADJUST SCALES ACCORDINGLY

JOB NO. 8930A.11
DRAWING NO. 80AL01
SHEET NO. XXX OF

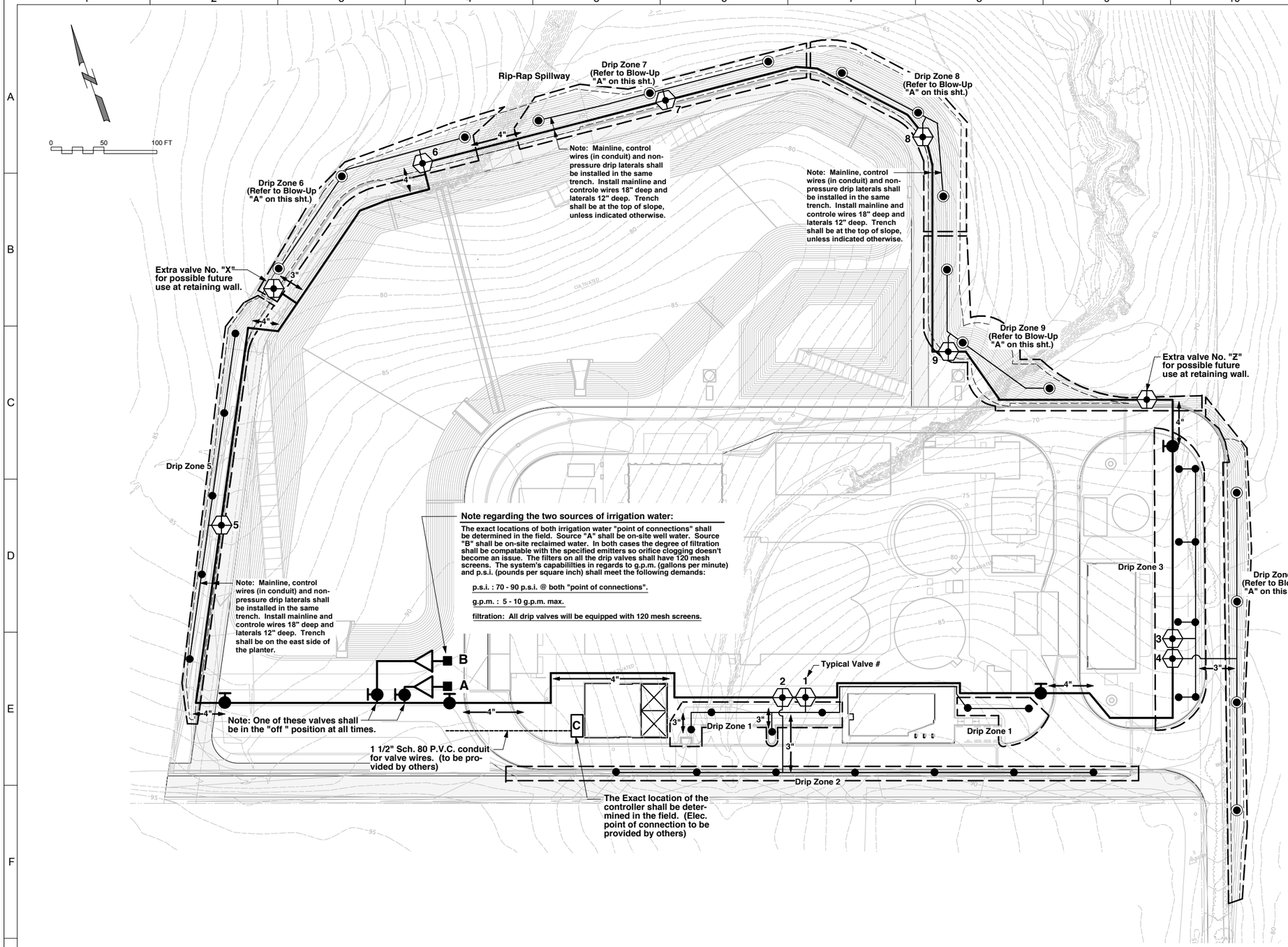

FACILITY IRRIGATION PLAN

SCALE: 1" = 50' - 0"

Irrigation Legend

Symbol	Description
	1 1/4" Red. Pres. Backflow Device (Detail 1, Sht. 3 of 4)
	1 1/4" Sch. 40 P.V.C. Mainline (Detail 3, Sht. 3 of 4)
	1 1/4" Ball Valve (Detail 2, Sht. 3 of 4)
C	Controller - Rainbird ESP-12-LXME 12 Station, wall mount (Detail 5, Sht. 3 of 4) W/LXMM Powder-Coated Metal Cabinet
	Elec. Drip Valve - Rainbird XCZ-PRB-100-COM w/120 mesh screen (Detail 6, Sht. 3 of 4)
	P.V.C. to drip detail - all P.V.C. to be 1" Sch. 40 (Details 7 - 10, Sht. 3 of 4)
	P.V.C. to drip details - all P.V.C. to be 1" Sch. 40 (Details 7 - 10 and Blow-Up "A" this sheet)
	Drip Zones (Details 7 - 10, Sht. 3 of 4)
	Sch. 40 P.V.C. Sleeve - sized to fit pipe and wire as necessary

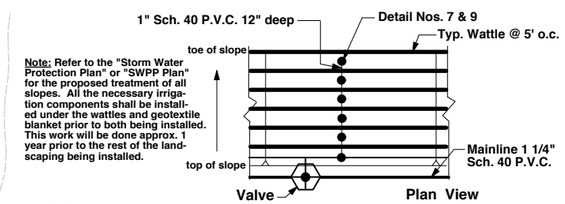

Note: Refer to the "Storm Water Protection Plan" or "SWPP Plan" for the proposed treatment of all slopes. All the necessary irrigation components shall be installed under the wattles and geotextile blanket prior to both being installed. This work will be done approx. 1 year prior to the rest of the landscaping being installed.

A BLOW-UP "A" - RIGID P.V.C. PIPE ON SLOPES

Scale: 1"= 20'-0"

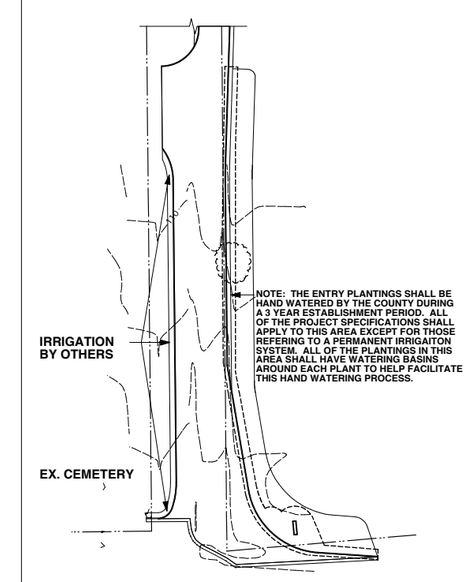

ENTRY IRRIGATION PLAN

SCALE: 1" = 50' - 0"

REV	DATE	BY	DESCRIPTION

DESIGNED SC
DRAWN SC
CHECKED SC
DATE SEPTEMBER 2013

LICENSED LANDSCAPE ARCHITECT — STEVEN P. CAMINITI No. 1941 RENEWAL 11/13 — STATE OF CALIFORNIA

STEVEN P. CAMINITI
CAL. LIC. NO. 1941
LANDSCAPE ARCHITECTURE, ETCETERA
P.O. BOX 1241, SAN LUIS OBISPO, CA. 93406
805/544-6429 FAX 544-6443
EMAIL: stevenpc@charter.net

carollo®

SAN LUIS OBISPO COUNTY

SAN LUIS OBISPO COUNTY

LOS OSOS WATER RECYCLING FACILITY PROJECT

LANDSCAPE
GENERAL SITE IRRIGATION PLAN

VERIFY SCALES
BAR IS ONE INCH ON ORIGINAL DRAWING
0 1"
IF NOT ONE INCH ON THIS SHEET, ADJUST SCALES ACCORDINGLY

JOB NO. 8930A.11
DRAWING NO. 80AL02
SHEET NO. XXX OF

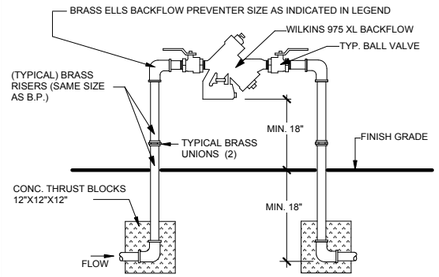

NOTE:
1. CONTACT COUNTY BACKFLOW PREVENTION INSPECTOR AT TIME OF INSTALLATION.
2. ALL P.V.C. PIPE SHALL BE PURPLE

1 WILKINS 975 R.P. DEVICE
SCALE: NTS

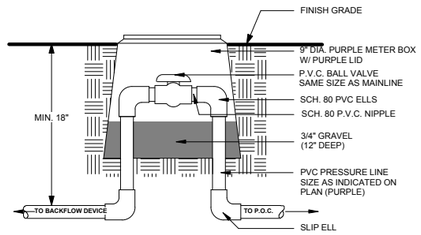

ALL PIPE SHALL BE PURPLE

2 BALL VALVE
SCALE: NTS

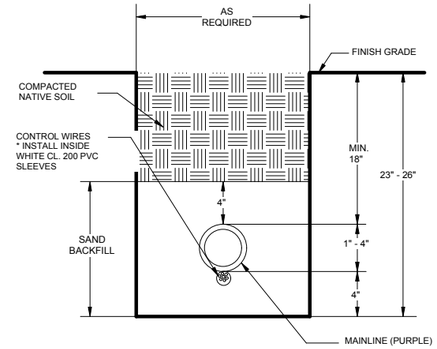

ALL PIPE SHALL BE PURPLE EXCEPT WIRE SLEEVES

3 MAINLINE
SCALE: NTS

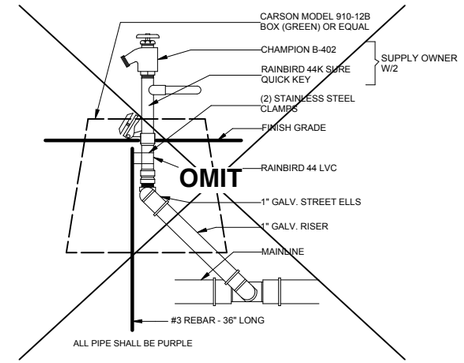

ALL PIPE SHALL BE PURPLE

4 HOUSE VALVE-QUICK COUPLER
SCALE: NTS

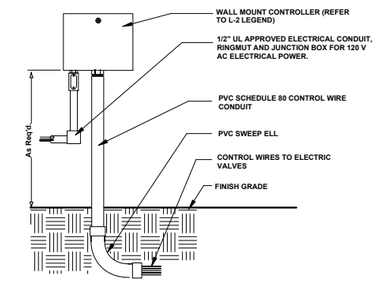

5 CONTROLLER-WALL MOUNT
SCALE: NTS

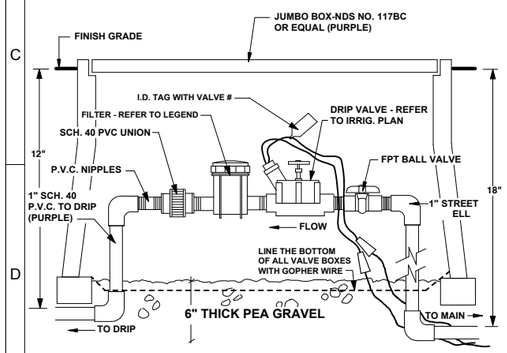

ALL PIPE SHALL BE PURPLE

6 ELEC. VALVE-DRIP
SCALE: NTS

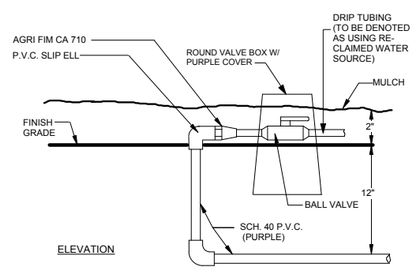

NOTE: MARK TOP OF BOXES EITHER "T" OR "S"

ALL P.V.C. PIPE SHALL BE PURPLE

7 P.V.C. TO DRIP
SCALE: NTS

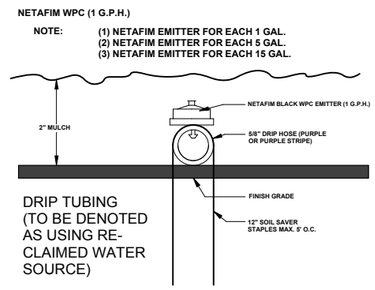

8 DRIP DETAIL
SCALE: NTS

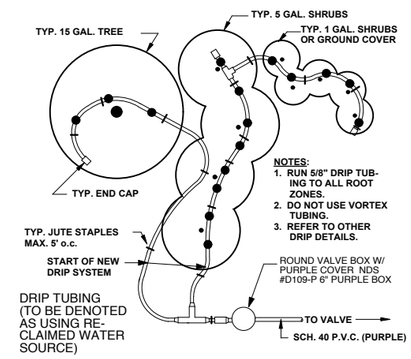

9 DRIP PLAN VIEW
SCALE: NTS

DESIGN CRITERIA FOR DRIP IRRIGATION

1. NUMBER OF EMITTERS
   (1) 1 G.P.H. NETAFIM EMITTERS/1 GAL. SHRUB OR TREE
   (2) 1 G.P.H. NETAFIM EMITTERS/5 GAL. SHRUB OR TREE
   (3) 1 G.P.H. NETAFIM EMITTERS/15 GAL. SHRUB OR TREE
   (5) 1 G.P.H. NETAFIM EMITTERS/24" BOXED TREE
2. MAXIMUM FLOW PER LATERAL
   MAXIMUM 225 G.P.H. PER .580" DRIP LATERAL
   MAXIMUM 350' TUBE LENGTH PER .580" LATERAL
3. .580" DRIP TUBING SHALL BE RUN TO ALL ROOTBALLS. NO 1/8" VORTEX TUBING SHALL BE USED.
4. CONTRACTOR SHALL BE RESPONSIBLE FOR CALCULATING TOTAL NUMBERS OF EMITTERS NECESSARY AND TOTAL FOOTAGE OF .580" DRIP TUBING NECESSARY TO INSTALL PROJECT. NUMBERS INDICATED ON PLANS ARE PROVIDED AS A CONVENIENCE TO THE CONTRACTOR. LANDSCAPE ARCHITECT ASSUMES NO RESPONSIBILITY FOR THE ACCURACY OF THESE COUNTS.

10 DRIP SPECIFICATIONS
SCALE: NTS

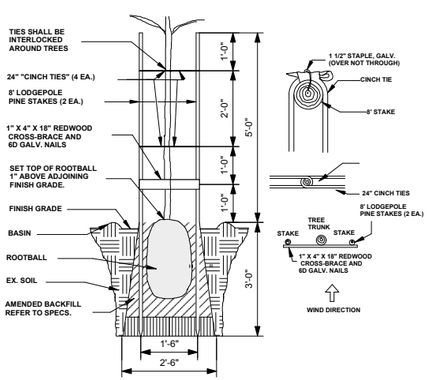

11 DOUBLE STAKING DETAIL
SCALE: NTS

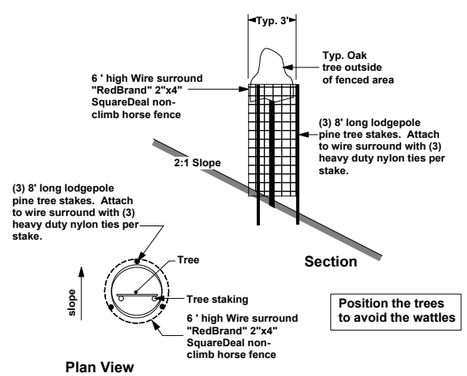

12 OAK TREE - DEER BARRIERS
SCALE: NTS

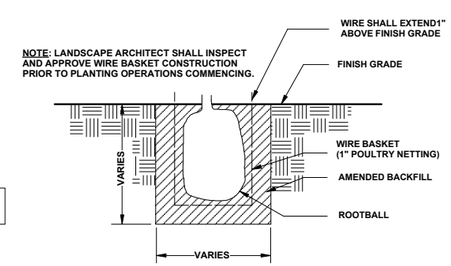

13 WIRE BASKET DETAIL
SCALE: NTS

REV	DATE	BY	DESCRIPTION

DESIGNED SC
DRAWN SC
CHECKED SC
DATE SEPTEMBER 2013

LICENSED LANDSCAPE ARCHITECT — STEVEN P. CAMINITI No. 1941 RENEWAL 11/13 — STATE OF CALIFORNIA

STEVEN P. CAMINITI
CAL. LIC. NO. 1941
LANDSCAPE ARCHITECTURE, ETCETERA
P.O. BOX 1247, SAN LUIS OBISPO, CA. 93406
805/544-6429 FAX 544-6443
EMAIL: stevenpcecharter.net

carollo

SAN LUIS OBISPO COUNTY

SAN LUIS OBISPO COUNTY
LOS OSOS WATER RECYCLING FACILITY PROJECT
LANDSCAPE
GENERAL SITE IRRIGATION DETAILS

VERIFY SCALES
BAR IS ONE INCH ON ORIGINAL DRAWING
0 — 1"
IF NOT ONE INCH ON THIS SHEET, ADJUST SCALES ACCORDINGLY

JOB NO. 8930A.11
DRAWING NO. 80AA03
SHEET NO. XXX OF

1. GENERAL

1.01 SCOPE

A. WORK INCLUDED

● 1. SOIL AMENDMENT
● 2. FINISH GRADING OF PLANTED AREAS
● 3. PLANTING
○ 4. SODDING
○ 5. SEEDING
○ 6. HYDROMULCH SEEDING
● 7. MULCHING

● B. RELATED WORK IN OTHER SECTIONS:

1. IRRIGATION

● C. RELATED WORK IN OTHER SECTIONS (BY OTHERS):

1. ROUGH GRADING- DEFINED AS "WITHIN 1" OF FINISH GRADE". THIS INCLUDES MOUNDING AS SHOWN.

● 1.02 REQUIREMENTS OF REGULATORY AGENCIES:

A. PERFORM WORK IN ACCORDANCE WITH ALL APPLICABLE LAWS, CODES AND REGULATIONS.

● 1.03 SELECTION AND ORDERING OF PLANT MATERIAL: PLANTS SHALL BE INSPECTED AND APPROVED BY LANDSCAPE ARCHITECT. SUBSTITUTIONS OF PLANT MATERIALS IF NECESSARY, SHALL BE APPROVED BY LANDSCAPE ARCHITECT.

● 1.04 INSPECTION OF SITE: VISIT SITE AND INSPECT CONDITIONS AS THEY EXIST PRIOR TO SUBMITTING BID.

● 1.05 CONTRACT GROWING OF PLANT MATERIALS: THE MAJORITY OF ALL PLANTS SPECIFICED ON THESE DRAWINGS WILL NEED TO BE CONTRACT GROWN. NATIVE SON'S NURSERY AND LAS PILITAS NURSERY HAVE BEEN CONTACTED AND ARE INTEREST-ED. THE LANDSCAPE CONTRACTOR SHOULD INCLUDE IN THEIR BID A DEPOSIT AMOUNT TO BE PAID TO THE GROWER.

● 1.06 PROTECTION OF EXISTING UNDERGROUND UTILITIES: IF EXISTING UNDERGROUND UTILITIES ARE DAMAGED DURING PLANTING AND IRRIGATION CONSTRUCTION CONTRACTOR SHALL REPLACE OR REPAIR SUCH UTILITIES AT NO COST TO OWNER.

● 1.07 MAINTENANCE:

A. MAINTENANCE PERIOD TO BEGIN UPON INSPECTION AND APPROVAL BY LANDSCAPE ARCHITECT AND SHALL BE FOR **60** DAYS.

B. MAINTENANCE SHALL CONSIST OF ALL THE NECESSARY STEPS TO ENSURE THAT THE LANDSCAPE IS IN A HEALTHY, ATTRACTIVE, THRIVING CONDITION.

● 1.08 FINAL ACCEPTANCE: WILL OCCUR UPON SATISFACTORY COMPLETION OF ALL WORK, BUT EXCLUSIVE OF REPLACEMENT OF PLANT MATERIALS UNDER THE WARRANTY PERIOD.

● 1.09 WARRANTY PERIOD AND REPLACEMENTS:

A. ALL TREES, SHRUBS, AND VINES SHALL BE WARRANTED FOR ONE YEAR FROM DATE OF FINAL ACCEPTANCE.

B. CONTRACTOR SHALL NOT BE HELD RESPONSIBLE FOR FAILURE DUE TO VANDALISM, NEGLECT BY OWNER, OR NATURAL DISASTER.

2. MATERIALS

● 2.01 PLANTS: SHALL BE HEALTHY AND VIGOROUS, WELL BRANCHED AND DENSELY FOLIATED WHEN IN LEAF. THEY SHALL BE FREE OF DISEASE, AND SHALL HAVE HEALTHY, WELL DEVELOPED ROOT SYSTEMS. LANDSCAPE ARCHITECT SHALL APPROVE ALL PLANT MATERIALS PRIOR TO PLANTING.

○ 2.02 MATERIALS FOR SODDED AREAS : SOD SHALL BE "NO MOW FINE FESCUE BLEND AS GROWN BY PACIFIC SOD, OR APPROVED EQUAL.

○ 2.03 MATERIALS FOR SEEDED LAWNS

A. SEED: SHALL BE "PREVAIL" AS MANUFACTURED BY NORTHRUP KING, OR APPROVED EQUAL.

B. TOPDRESS: SHALL BE STEER MANURE AS MANUFACTURED BY BANDINI OR EQUAL.

○ 2.04 MATERIALS FOR HYDROMULCH

A. FIBER: SHALL BE WOOD CELLULOSE FIBER, CONWED SPRAY MULCH OR EQUAL.

B. SEED: AS NOTED ON THIS SHEET.

C. FERTILIZER: AS NOTED ON THIS SHEET.

D. M. BINDER: SHALL BE ECOLOGY CONTROL M. BINDER, AZ-TAC OR EQUAL.

● 2.05 SOIL AMENDMENTS:

● A. ORGANIC AMENDMENT: SHALL BE NITROLIZED REDWOOD AND MUSHROOM COMPOST, AS AVAILABLE, THROUGH SEQUOIA PRODUCTS, OR APPROVED EQUAL.

● B. GYPSUM: SHALL BE SOF'N SOIL GYPSUM OR EQUAL.

○ C. GROUND COVER PRE-PLANT FERTILIZER : SHALL BE 12-12-12 AS MANUFACTURED BY SIMPLOT OR EQUAL.

○ D. GROUND COVER TOP DRESS FERTILIZER: SHALL BE16-6-8 "TURF SUPREME" AS MANUFACTURED BY SIMPLOT OR EQUAL.

○ E. SODDED OR SEEDED LAWN PRE-PLANT TOP DRESS FERTILIZER: SHALL BE 16-6-8 "TURF SUPREME" AS MANUFACTURED BY SIMPLOT OR EQUAL.

● F. TREE AND SHRUB PLANTING FERTILIZER: AGRIFORM PACKETS 20-10-5 FORMULA .

● 2.06 STAKING MATERIALS:

A. TREE STAKES: 8' LODGEPOLE PINE STAKES

B. TIES: 18" "CINCH TIES."

● 2.07 PRE-EMERGENCE WEED CONTROL: RONSTAR OR EQUAL.

● 2.08 HERBICIDE: ROUNDUP AS MANUFACTURED BY MONSANTO.

○ 2.09 HEADER: PER DETAIL

○ 2.10 GUYING MATERIALS: REFER TO DETAIL.

● 2.11 WOODMULCH: SHALL BE "GORILLA HAIR" BARK AS MANUFACTURED BY SEQUOIA PRODUCTS, OR APPROVED EQUAL.

● 2.12 DEEP ROOT PLANTERS: AS MANUFACTURED BY "DEEP ROOT CORP." MODEL NO. 22-30-18 PRE-FORMED ROOT BARRIER, OR APPROVED EQUAL.

○ 2.13 JUTE MESH: AS MANUFACTURED BY "BELTON INDUSTRIES", OR APPROVED EQUAL. SHALL BE 100% NATURAL AND BIODEGRADABLE.

● 2.14 WIRE BASKETS: PER DETAIL

3. EXECUTION

○ 3.01 AMENDMENT OF SOIL:

A. APPLY AMENDMENTS TO ALL SODDED AREAS AND AREAS PLANTED IN GROUND COVERS FROM FLATS PER "SOIL AMENDMENT OUTLINE" LOCATED AT THE END OF THIS SECTION.

B. INCORPORATE THOROUGHLY WITH TOP 12 IN. SOIL LAYER AND REMOVE STONES OVER 1 IN. DIAMETER, ROOTS, CLODS, WEEDS AND OTHER EXTRANEOUS MATERIAL. BRING AMENDED SOIL TO FINISH GRADE.

● 3.02 SURFACE DRAINAGE OF PLANTED AREAS: LANDSCAPE CONTRACTOR SHALL BEAR FINAL RESPONSIBILITY FOR PROPER SURFACE DRAINAGE OF PLANTED AREAS. IF AREA DRAINS ARE REQUIRED, GENERAL CONTRACTOR SHALL BE RESPONSIBLE FOR THEIR INSTALLATION.

● 3.03 LAYOUT OF PLANTED AREAS: PRIOR TO EXCAVATION OF PLANTING HOLES, ALL PLANTS SHALL BE SET OUT ON PROJECT IN CONTAINERS SO THAT LOCATIONS CAN BE APPROVED BY LANDSCAPE ARCHITECT. THE EXACT LOCATIONS OF UNDERGROUND UTILITIES SHALL BE DETERMINED AT THIS POINT BY THE LANDSCAPE CONTRACTOR.

● 3.04 EXCAVATION OF PLANTING HOLES:

WIDTH = CAN x 2 DEPTH = CAN + 8"

● 3.05 DETRIMENTAL DRAINAGE: NOTIFY ARCHITECT IF THERE EXIST DRAINAGE CONDITIONS DETRIMENTAL TO GROWTH OF PLANT MATERIAL.

● 3.06 PLANTING OPERATIONS:

A. PLANTING SOIL:
2/3 EXISTING SOIL
1/3 ORGANIC AMENDMENT

B. AGRIFORM TABLETS:

1 GALLON CAN	1 PACKETS
5 GALLON CAN	3 PACKETS
15 GALLON CAN	5 PACKETS

○ 3.07 GROUND COVER PLANTING :

A. PLANT GROUND COVERS AT SPACINGS SPECIFIED ON PLAN.

B. APPLY TOPDRESS FERTILIZER PER SPECIFICATIONS IN "SOIL AMENDMENT OUTLINE" BELOW.

○ 3.08 SODDING OPERATIONS :

A. ROLL AMENDED SOIL WITH A 100 LB. WATER-BALLAST ROLLER.

B. SOD IMMEDIATELY THEREAFTER.

C. LAY SOD SO THAT ADJACENT STRIPS BUTT TIGHTLY. LAY SOD ON SLOPES WITH STRIPS PARALLEL TO CONTOURS. STAGGER JOINTS. TAMP AND ROLL SOD TO MAKE CONTACT WITH SODBED.

D. APPLY TOPDRESS FERTILIZER PER SPECIFICATIONS IN "SOIL AMENDMENT OUTLINE" LOCATED AT THE SEND OF THIS SECTION.

E. WATER SOD THOROUGHLY IMMEDIATELY AFTER FERTILIZATION.

○ 3.09 SEEDING OPERATIONS :

A. ROLL AMENDED SOIL WITH 200 LB. WATER-BALLAST ROLLER AND BRING TO FINISH GRADE.

B. LIGHTLY RAKE SEED BED SURFACE TO 1/4 IN. DEPTH. SEED IMMEDIATELY THEREAFTER.

C. SOW SEED WITH A MECHANICAL SEEDER AT THE RATE OF 4 LBS. PER 1,000 SQ. FT. COVER SEED TAKING EXTREME CARE THAT SEED IS EVENLY DISTRIBUTED OVER ENTIRE SEED BED.

D. ROLL SEEDED BED WITH 200 LB. BALLAST ROLLER.

E. APPLY TOPDRESS FERTILIZER PER SPECIFICATIONS IN "SOIL AMENDMENT OUTLINE" LOCATED AT THE END OF THIS SECTION.

F. TOPDRESS SEEDED BED WITH SPECIFIED STEER MANURE AND WATER WITH FINE SPRAY.

○ 3.10 HYDROMULCHING OPERATIONS:

A. SEED SLURRY SHALL BE APPLIED WITH A COMMERCIAL TYPE HYDROSEEDER.

B. FINISH GRADE SHALL BE ESTABLISHED REMOVING STONES AND DEBRIS. CONTRACTOR SHALL OBTAIN APPROVAL OF HYDROMULCH AREA PRIOR TO APPLICATION.

C. SLURRY MIX SHALL BE APPLIED IN A UNIFORM MAT AT SPECIFIED RATE. KEEP HYDROMULCH WITHIN AREAS DESIGNATED.

○ 3.11 HEADER: INSTALL PER DETAIL.

○ 3.12 SOIL AMENDMENT OUTLINE:

○ AREA	AMENDMENT	RATE 6 C.Y./1000 s.f.
GRD. COVER	12-12-12	20LBS./1000
PRE. PLT.	ORGANIC AMEND.	6 CU. YDS./1000
(ROSES & GERANIUM)	GYPSUM	50 LBS./1000
	TOPDRESS FERT. 16-6-8	6 LBS./1000
○ SODDED AREAS	PREPLT FERT. 16-6-8	20 LBS./1000
	ORGANIC AMEND.	6 CU. YDS./1000
	GYPSUM	50 LBS./1000
	TOPDRESS FERT. 16-6-8	8 LBS./1000
○ HYDRO-SEEDED AREAS	ORGANIC AMEND.	6 CU. YDS./1000
	GYPSUM	50 LBS./1000
	FIBER	REFER TO PLANS
	SEED	REFER TO PLANS
	FERTILIZER 16-6-8	REFER TO PLANS
	M. BINDER	REFER TO PLANS

● 3.13 APPLICATION OF PRE-EMERGENT: APPLY TO ALL PLANTING AREAS OTHER THAN LAWNS PER MANUFACTURER'S INSTRUCTIONS.

● 3.14 WOODMULCHING OF PLANTED AREAS: APPLY A 3" THICK COVER OF "GORILLA HAIR" BARK IN ALL PLANTED AREAS.

● 3.15 INSTALLATION OF "DEEP ROOT" PLANTERS: ALL NEW TREES PLANTED WITHIN 5' OF ANY IMPROVEMENTS i.e. BLDG., CURBS, WALKS, ETC. SHALL BE PLANTED INSIDE A "DEEP ROOT" PLANTER.

○ 3.16 INSTALLATION OF "JUTE MESH": INSTALL JUTE MESH ON ALL SLOPES PER MANUFACTURER'S SPECIFICATION.

● 3.17 APPLICATION OF HERBICIDE: A MINIMUM OF (2) TWO SPRAY APPLICATIONS OF "ROUNDUP" SHALL BE APPLIED IN ALL SPECIFIED PLANTING AREAS THAT SHOW SIGNS OF EITHER BURMUDA OR KAKUYA GRASS. NO NEW PLANTING SHALL OCCUR UNTIL A COMPLETE KILL OF THESE GRASSES HAS BEEN ACHIEVED.

● 3.18 TREE STAKING : STAKE ALL TREES PER DETAIL.

● 3.19 OAK TREE - DEER BARRIERS: INSTALL PER DETAIL.

● 3.20 WIRE BASKETS: INSTALL PER DETAIL.

LANDSCAPE IRRIGATION SYSTEM

1. GENERAL

1.01 SCOPE

A. WORK INCLUDED:

● 1. FURNISHING AND INSTALLING IRRIGATION SYSTEM COMPLETE.

● 2. SLEEVES FOR IRRIGATION PIPING AND REMOTE CONTROL WIRES UNDER PAVEMENTS AND WALKS , EXCEPT AS NOTED ON PLANS.

● 3. IRRIGATION PIPING UNDER PAVEMENTS AND WALKS.

B. RELATED WORK IN OTHER SECTIONS (BY OTHERS):

○ 1. ELECTRICAL STUBOUT FOR IRRIGATION CONTROLLER. (BY OTHERS)

○ 2. WATER STUBOUT(S) FOR IRRIGATION SYSTEM. (BY OTHERS)

○ 3. INSTALLATION OF WATER METER(S).

○ 4. CONDUIT WITH SWEEP ELLS FROM CONTROLLER TO LANDSCAPE AREAS AS SHOWN. (BY OTHERS)

● 1.02 INSPECTION OF CONDITIONS: INSPECTION OF SITE CONDITIONS PRIOR TO THE START OF ANY WORK UNDER THIS SECTION IS REQUIRED. BEGINNING ANY WORK WITHOUT ING UNSUITABLE CONDITIONS TO THE LANDSCAPE ARCH-I TECT CONSTITUTES ACCEPTANCE OF CONDITIONS BY THE CONTRACTOR. THIS SHALL INCLUDE INSPECTION AND FIELD LOCATION OF ALL EXISTING UNDERGROUND UTILITIES.

● 1.03 CODES, RULES AND SAFETY ORDERS: ALL WORK TO BE IN FULL ACCORDANCE WITH ALL FEDERAL, STATE AND LOCAL RULES AND REGULATIONS.

● 1.04 PERMITS AND FEES: OBTAIN ALL PERMITS AND PAY ANY REQUIRED FEES.

● 1.05 SUBSTITUTIONS: ALL SUBSTITUTIONS MUST BE APPROVED BY LANDSCAPE ARCHITECT IN WRITING.

● 1.06 PROTECTION OF EXISTING CONDITIONS: CONTRACTOR SHALL ACQUAINT HIMSELF WITH ALL SITE CONDITIONS INCLUDING EXISTING PLANT MATERIAL AND UTILITIES. CONTRACTOR SHALL TAKE NECESSARY PRECAUTIONS TO PROTECT SAID SITE CONDITIONS. SHOULD DAMAGE BE INCURRED, THE CONTRACTOR SHALL REPAIR ALL DAMAGE AT NO COST TO OWNER.

● 1.07 "AS-BUILT" IRRIGATION DRAWINGS: LANDSCAPE CONTRACTOR SHALL SUPPLY TO OWNER RECORD DRAWINGS OF THE COMPLETE IRRIGATION SYSTEM. THESE DRAWINGS SHALL BE ON AN ORIGINAL THAT WILL BE SUPPLIED BY THE LANDSCAPE ARCHITECT.

● 1.08 FINAL ACCEPTANCE: WORK UNDER THIS SECTION WILL BE ACCEPTED AT TERMINATION OF MAINTENANCE PERIOD SPECIFIED IN PLANTING SECTION.

● 1.09 WARRANTY: IN ADDITION TO MANUFACTURER'S GUARANTEES, ALL WORK SHALL BE WARRANTED FOR ONE YEAR FROM DATE OF FINAL ACCEPTANCE.

2. MATERIALS

● 2.01 GENERAL: MATERIALS THROUGHOUT THE SYSTEM SHALL BE NEW AND IN PERFECT CONDITION.

● 2.02 BACKFLOW PREVENTER: AS INDICATED ON PLANS.

● 2.03 PIPE: AS INDICATED ON PLANS. ALL P.V.C. PIPE EXCEPT SLEEVES SHALL BE PURPLE.

● 2.04 FITTINGS: PVC SCHEDULE 40, AS MANUFACTURED BY SLOANE, LASCO, OR EQUAL.

● 2.05 CONTROL VALVES: AS INDICATED ON PLANS.

● 2.06 SLEEVE MATERIALS: FOR BOTH WATER LINES AND CONTROL WIRES TO BE PVC 1120-1220, SCHEDULE 40 PIPE.

● 2.07 AUTOMATIC IRRIGATION CONTROLLER(S) : TO BE AS INDICATED ON PLANS.

● 2.08 CONTROL WIRE:

A. WIRE: SOLID COPPER WIRE, U.L. APPROVED FOR DIRECT BURIAL IN GROUND. MIN. GAUGE #14.

B. SPLICING MATERIALS: DRY SPLICE CONNECTIONS AND SEALER MANUFACTURED BY SPEARS OF EQUAL.

● 2.09 VALVE BOXES: TO BE MANUFACTURED BY CARSON OR EQUAL. SIZE TO ACCOMMODATE SPECIFIED EQUIPMENT. ALL BOXES SHALL BE PURPLE.

○ 2.10 SPRINKLER HEADS: AS INDICATED ON PLANS.

○ 2.11 PRESSURE REGULATOR: AS INDICATED ON PLANS.

● 2.12 DRIP SYSTEM EQUIPMENT:
AS SPECIFIED ON PLANS.

A. DRIP HEADS
B. DRIP TUBING
C. PRESSURE REDUCER
D. FILTER
E. MISC. FITTINGS AND EQUIPMENT

3. EXECUTION

● 3.01 LAYOUT: DRAWINGS ARE DIAGRAMMATIC. FULL AND COMPLETE COVERAGE IS REQUIRED. CONTRACTOR SHALL MAKE MINOR ADJUSTMENTS TO SYSTEMS IN ORDER TO ACHIEVE COVERAGE AT NO ADDITIONAL COST TO OWNER. WHERE SPRAY HEADS ARE SHOWN ADJOINING PARKING LOT STRIPPING, THE INTENT IS TO INSTALL THOSE HEADS EXACTLY AS SHOWN.

● 3.02 TRENCHING: MINIMUM DEPTH

A. OVER PVC ON PRESSURE SIDE OF CONTROL VALVES (18 IN.).

B. OVER PVC ON NON-PRESSURE SIDE OF CONTROL VALVES (12 IN.).

C. OVER CONTROL WIRES (18 IN.).

D. ALL PVC PIPE UNDER ANY PAVING (18 IN.) AND SHALLBE BEDDED WITH MIN. 6 IN. OF SAND BACKFILL ON ALL SIDES.

● 3.03 PHASING OF WORK: REFER TO BLOW-UP "A" ON THE IRRIGATION PLAN. P.V.C. PIPE ON ALL SLOPES SHALL BE INSTALLED PRIOR TO WORK ON THE SWPP PLAN COMMENCING.

● 3.04 TRENCHING OVER EXISTING UTILITIES: LANDSCAPE CONTRACTOR SHALL DETERMINE WHERE ALL EXISTING UNDERGROUND UTILITIES ARE PRIOR TO TRENCHING.

● 3.05 SLEEVING: COORDINATE SLEEVE INSTALLATION WITH OTHER TRADES AS REQUIRED. THIS WORK WILL BE DONE EARLY IN IN THE CONSTRUCTION PROCESS.

● 3.06 PIPE LINE ASSEMBLY: INSTALL IN ACCORDANCE WITH MANUFACTURER'S INSTRUCTIONS.

● 3.07 MISCELLANEOUS EQUIPMENT: LISTED BELOW TO BE INSTALLED PER DETAILS:

○ A. SPRINKLER HEADS
● B. CONTROL VALVES
○ C. HOSE VALVES
● D. AUTOMATIC CONTROLLER
● E. DRIP SYSTEM
● F. BACKFLOW PREVENTER
○ G. PRESSURE REGULATOR

END OF SECTION

LEGEND

● WORK TO BE INCLUDED IN BID ESTIMATE

○ WORK NOT INCLUDED IN BID ESTIMATE

REV	DATE	BY	DESCRIPTION

DESIGNED SC
DRAWN SC
CHECKED SC
DATE SEPTEMBER 2013

LICENSED LANDSCAPE ARCHITECT — STEVEN P. CAMINITI No. 1941 RENEWAL 11/13 — STATE OF CALIFORNIA

STEVEN P. CAMINITI
CAL LIC. NO. 1941
LANDSCAPE ARCHITECTURE, ETCETERA
P.O. BOX 1247, SAN LUIS OBISPO, CA. 93406
805/544-6429 FAX 544-6443
EMAIL: stevenpc@charter.net

carollo®

SAN LUIS OBISPO COUNTY

SAN LUIS OBISPO COUNTY

LOS OSOS WATER RECYCLING FACILITY PROJECT

LANDSCAPE
GENERAL SITE SPECIFICATIONS

VERIFY SCALES
BAR IS ONE INCH ON ORIGINAL DRAWING
0 1"
IF NOT ONE INCH ON THIS SHEET, ADJUST SCALES ACCORDINGLY

JOB NO. 8930A.11
DRAWING NO. 80AL04
SHEET NO. XXX OF