ROAD NO.	JOB NO.	SHEET NO.	TOTAL SHEETS
	300463	1	15

CONSTRUCTION OF COUNTY SERVICE AREA No. 16

Shandon State Water Project Turnout

Contract No. 300463

APPROVED: 06 OCTOBER , 2015

~~DEPUTY~~ DIRECTOR OF PUBLIC WORKS

APPROVED: , 10/6/2015

UTILITIES DIVISION MANAGER

APPROVED, EXCEPT AS NOTED IN THE LETTER FROM THE DEPARTMENT TO THE San Luis Obispo County Flood Control and Water Conservation District DATED 9/1/2015 FOR CONNECTION TO THE STATE WATER PROJECT.

Robert B Cooke 9/1/15

STATE OF CALIFORNIA, DEPARTMENT OF WATER RESOURCES — DATE

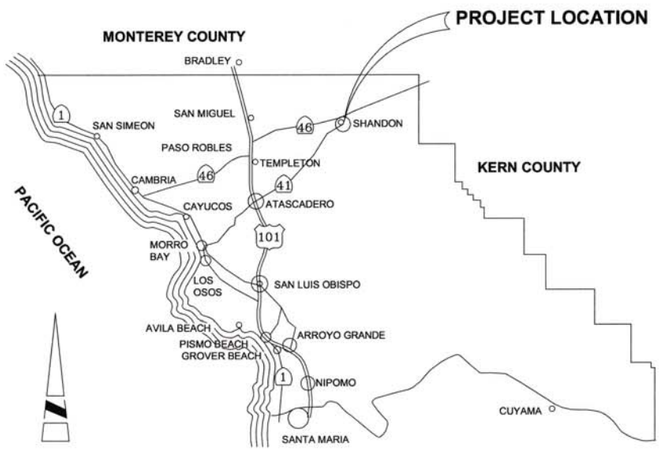

LOCATION MAP
SAN LUIS OBISPO COUNTY
NOT TO SCALE

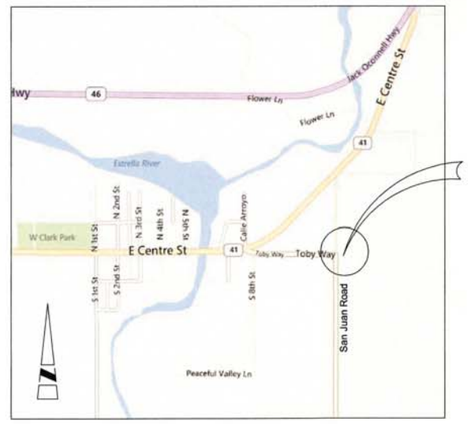

VICINITY MAP
NOT TO SCALE

SHEET INDEX

Sheet Number	Sheet Title
1	TITLE SHEET
2	GENERAL NOTES AND ABBREVIATIONS
3	SITE PLAN
4	2-INCH PIPELINE - PLAN AND PROFILE
5	METER VAULT AND SECTIONS
6	CONTROL BUILDING AND SECTIONS
7	CHAIN LINK FENCE AND GATE DETAILS
8	DETAILS
9	DETAILS
10	ELECTRICAL PLAN AND CONTROL BUILING
11	MISCELLANEOUS SCHEDULES
12	ELECTRICAL SITE PLAN
13	INSTRUMENTATION LEGEND & SYMBOLS
14	SHANDON METER STATION P&ID
15	INSTRUMENTATION DETAILS

CONTACT LIST

CENTRAL COAST WATER AUTHORITY:	JOHN BRADY	(805) 688-2292 EXT. 228
SAN LUIS OBISPO COUNTY FLOOD CONTROL AND WATER CONSERVATION DISTRICT	JEFF LEE	(805) 781-1043
PACIFIC GAS AND ELECTRIC	TOM WAHWEOTTEN	(805) 546-5272
DIG ALERT:		(800) 642-2444
AECOM:	MARIA ALVAREZ	(213) 593-8046
AT&T	?	(510) 645 2929

811 Know what's **below.** **Call** before you dig.

DWR NOTES:

A SEVEN (7) DAY ADVANCE NOTIFICATION IS REQUIRED PRIOR TO STARTING WORK WITHIN STATE WATER PROJECT RIGHT-OF-WAY. CONTACT THE DEPARTMENT OF WATER RESOURCES, DIVISION OF LAND AND RIGHT-OF WAY, ENCROACHMENT PERMIT SECTION, SACRAMENTO, CALIFORNIA, AT (800) 600-4397. SAN JOAQUIN FIELD DIVISION, (661) 858-5517 AND CENTRAL COAST WATER AUTHORITY AT (805) 697-5235, SHALL BE SIMULTANEOUSLY NOTIFIED.

EXCEPT AS OTHERWISE PROVIDED HEREIN, MEASURES SHALL BE TAKEN BY THE CONTRACTOR TO PROTECT IN PLACE ANY AND ALL SWP FACILITIES AND APPURTENANCES, INCLUDING BUT NOT LIMITED TO, COMMUNICATION CONTROL CABLES AND CORROSION PROTECTION TEST STATIONS AND PIPELINES. THE PERMITEE AND CONTRACTOR WILL BE LIABLE FOR ANY DAMAGE TO DWR FACILITIES AND APPURTENANCES AS A RESULT OF THE CONSTRUCTION, AND FOR ANY OTHER DAMAGES OR LOSSES SUFFERED BY DWR OR ITS WATER CONTRACTORS, INCLUDING POWER, IRRIGATION, MUNICIPAL AND INDUSTRIAL WATER SUPPLY, AND COMMUNICATION LOSSES.

ALL TRENCH EXCAVATION SHALL COMPLY WITH THE MOST CURRENT OCCUPATIONAL SAFETY AND HEALTH ADMINISTRATION STANDARDS. TRENCH BACKFILL SHALL BE PLACED IN NO GREATER THAN 4-INCH LIFTS IF HAND COMPACTED OR NO GREATER THAN 8-INCH LIFTS IF POWER COMPACTED. TRENCH BACKFILL WITHIN DEPARTMENT OF WATER RESOURCES RIGHT-OF WAY SHALL BE COMPACTED TO 95 PERCENT RELATIVE COMPACTION (ASTM D1557).

0 1 2 3 ORIGINAL SCALE IN INCHES FOR REDUCED PLANS

REGISTERED PROFESSIONAL ENGINEER — No. C67468 EXP. 06/30/15 — CIVIL — STATE OF CALIFORNIA

COUNTY OF SAN LUIS OBISPO – PUBLIC WORKS DEPARTMENT

TITLE SHEET

SHANDON STATE WATER PROJECT TURNOUT

Designer	Date	Drawn By	Date	Design Engineer	Date
B. HALE	12/05/14	MG	12/05/14	M. ALVAREZ	12/05/14

ROAD NO.	JOB NO.	SHEET NO.	TOTAL SHEETS
	300463	2	15

ABBREVIATIONS

AC	-	ASPHALT CONCRETE	MAX	-	MAXIMUM
APPROX	-	APPROXIMATE	MFR	-	MANUFACTURER
CF	-	CUBIC FEET	MIN	-	MINIMUM
℄	-	CENTERLINE	NOM	-	NOMINAL
CLR	-	CLEARANCE	NPT	-	NATIONAL PIPE THREAD
CONC	-	CONCRETE	NTS	-	NOT TO SCALE
CPT	-	CATHODIC PROTECTION TEST STATION	OC	-	ON CENTER
			OD	-	OUTSIDE DIAMETER
DWG	-	DRAWING	POC	-	POINT OF CONNECTION
Ø	-	DIAMETER	PSI	-	POUNDS PER SQUARE INCH
DWR	-	DEPARTMENT OF WATER RESOURCES	PVC	-	POLYVINYL CHLORIDE
			RED	-	REDUCER
EL	-	ELEVATION	RPP	-	REMOTE PROCESS PANEL
EXIST	-	EXISTING	S	-	SLOPE
EW	-	EACH WAY	SCH	-	SCHEDULE
FF	-	FINISH FLOOR	SHT	-	SHEET
FG	-	FINISHED GRADE	SLO	-	SAN LUIS OBISPO
FL	-	FLOWLINE	SPEC	-	SPECIFICATION
FLG	-	FLANGE	SST	-	STAINLESS STEEL
FRP	-	FIBER REINFORCED POLYESTER	STA	-	STATION
			STD	-	STANDARD
FS	-	FINISH SURFACE	SWP	-	STATE WATER PROJECT
HSS	-	HIGH STRENGTH STEEL	TYP	-	TYPICAL
ICP	-	INSTRUMENT CONTROL PANEL	UNK	-	UNKNOWN
			UNO	-	UNLESS NOTED OTHERWISE
ID	-	INSIDE DIAMETER	W/	-	WITH
L	-	LENGTH	WWM	-	WELDED WIRE MESH

LEGEND OF LINE TYPES

- EDGE OF PAVEMENT
- PROPERTY LINE
- OHE — OVERHEAD ELECTRICAL
- WT — WATER MAIN
- ATT — UNDERGROUND TELEPHONE
- X — CHAIN LINK FENCE
- FO — FIBER OPTIC

0 1 2 3
ORIGINAL SCALE IN INCHES FOR REDUCED PLANS

CONSTRUCTION NOTES

1. CONSTRUCTION IN ROADWAYS SHALL COMPLY WITH THE REQUIREMENTS OF SAN LUIS OBISPO COUNTY.
2. OPEN TRENCHES AND POTHOLES SHALL BE PLATED DURING NON-WORKING HOURS WITH NON SKID STEEL PLATES.
3. UNLESS OTHERWISE NOTED, STATIONS ON PLANS REFER TO CENTERLINE OF PIPELINE AND ARE BASED ON HORIZONTAL DISTANCES.
4. UNLESS OTHERWISE NOTED, THE PROFILE GRADE FOR THE PIPE IS THE CENTER OF PIPE.
5. VERIFY DIMENSIONS AND CONDITIONS AT THE SITE BEFORE STARTING WORK. CONFLICTS BETWEEN DETAILS OR DIMENSIONS ON THE DRAWINGS SHALL BE REPORTED PROMPTLY TO THE OWNER, WHO WILL DETERMINE THE INTENT OF THE DESIGN.
6. FIELD VERIFY THE HORIZONTAL AND VERTICAL LOCATION, DIAMETER, AND ORIENTATION AT ALL CONNECTION POINTS AND COORDINATE WITH THE OWNER PRIOR TO CONSTRUCTION.
7. FURNISH AND INSTALL ALL PIPE MATERIALS AND FITTINGS, AS REQUIRED TO MEET EXISTING FIELD CONDITIONS FOR A COMPLETE INSTALLATION.
8. VIDEO RECORD AND DOCUMENT THE EXISTING CONDITION OF PROPERTIES AND SUBMIT THE RECORDING AND DOCUMENT TO THE OWNER PRIOR TO THE START OF CONSTRUCTION.
9. REPAIR DAMAGE TO LANDSCAPING, PAVING, CURBS, GUTTERS, IRRIGATION, STRUCTURES, ETC., CAUSED BY THE WORK, TO PRE-EXISTING CONDITION. FOR CURBS, SIDEWALKS, ETC., THE REPAIRS SHALL EXTEND TO THE NEAREST JOINT.
10. PAVEMENT CUTS SHALL BE PERFORMED BY SAW CUTTING. RECUT PAVEMENT AND REHABILITATE SUBGRADE PRIOR TO REPAVING WHERE UNDERMINING HAS OCCURRED.
11. MAINTAIN A COMPLETE AND ACCURATE RECORD OF ALL CHANGES IN PLANS AND SPECIFICATIONS THAT OCCUR DURING CONSTRUCTION. NO CHANGES SHALL BE MADE WITHOUT THE WRITTEN APPROVAL OF THE OWNER.
12. FURNISH AND MAINTAIN A LOCKABLE CHEMICAL TOILET AT THE WORK LOCATION WITH HAND SANITIZER.
13. PRIOR TO CONSTRUCTION AT THE METER TURNOUT SITE, AMEND THE EXISTING NON STORM WATER MANAGEMENT PLAN AND SWPPP AS NEEDED AND IN ACCORDANCE WITH CALIFORNIA REGULATIONS.
14. ALL SUBSURFACE UTILITY DATA ARE DEPICTED TO LEVEL D AS DEFINED IN ASCE 38-02 UNLESS OTHERWISE INDICATED.
15. SURVEY DATA PRESENTED ON THE DRAWINGS ARE BASED ON AS BUILT RECORDS FOR THE STATE OF CALIFORNIA DEPARTMENT OF WATER RESOURCES PROJECT, CALIFORNIA AQUEDUCT COASTAL BRANCH II, SPEC. No. 93-33.
16. GEOTECHNICAL INFORMATION IS AVAILABLE IN "FINAL CONSTRICTION GEOLOGY REPORT COASTAL BRANCH - PHASE II REACH 2 PIPELINE, CHOLAME VALLEY TO SHEDD CANYON". PROJECT GEOLOGY REPORT C-113, JULY 2001.

STANDARDS DRAWING INDEX

COUNTY OF SAN LUIS OBISPO

Drawing No.	Title
R-3	TRENCH REPAIR
W-3	VALVE ANCHOR AND BOX
W-10	WATERLINE CUT-IN TEE AND HOT TAP ASSEMBLY

APPROVED FOR CONSTRUCTION

State of California
Department of Water Resources

REGISTERED PROFESSIONAL ENGINEER M. ALVAREZ No. C67401 EXP. 06/30/17 CIVIL STATE OF CALIFORNIA

COUNTY OF SAN LUIS OBISPO – PUBLIC WORKS DEPARTMENT
GENERAL NOTES AND ABBREVIATIONS
SHANDON STATE WATER PROJECT TURNOUT

Designer	Date	Drawn By	Date	Design Engineer	Date
B. HALE	12/05/14	MG	12/05/14	M. ALVAREZ	12/05/14

ROAD NO.	JOB NO.	SHEET NO.	TOTAL SHEETS
	300463	3	15

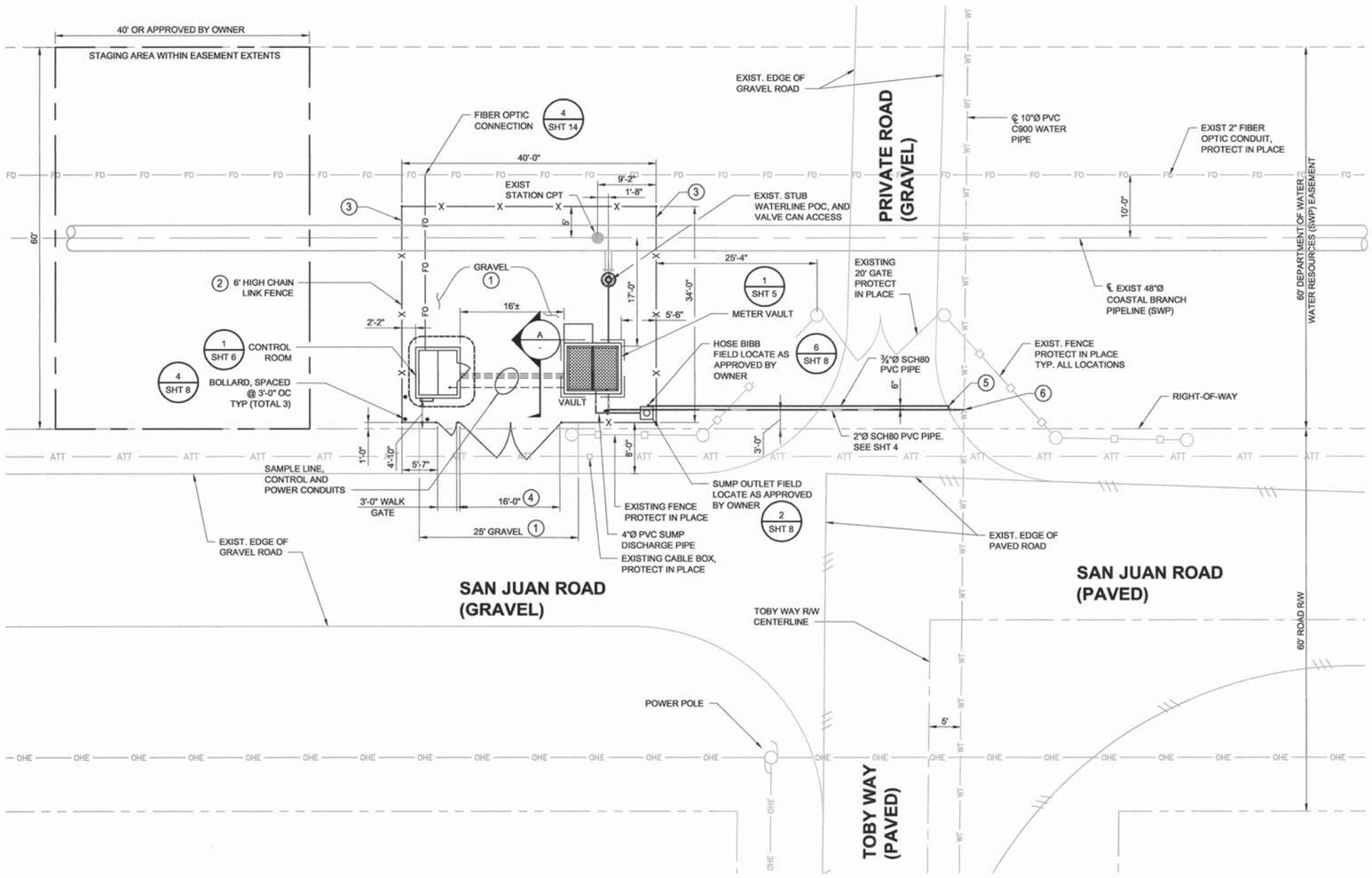

1 | SITE PLAN

SCALE: 1" = 10'

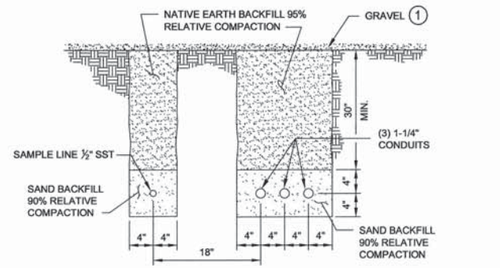

A | TRENCH SECTION

NOT TO SCALE

NOTES

1. 6" DEPTH OF ¾" CRUSHED ROCK
2. FURNISH AND INSTALL 6' HIGH CHAINLINK FENCE PER SHT 7.
3. FENCE POST ARE TO CLEAR 48-INCH DWR PIPELINE.
4. DOUBLE LEAF GATE PER DETAIL ON SHT 7.
5. INSTALL 2"x¾" SCH80 PVC TEE IMMEDIATELY NORTH OF 2" TAPPING GATE VALVE. ¾" PIPE TO RUN PARALLEL TO 2" PIPE AT THE SAME ELEVATION.
6. INSTALL TAPPING SLEEVE PER SLO STD DWG W-10.

APPROVED FOR CONSTRUCTION

State of California
Department of Water Resources

REGISTERED PROFESSIONAL ENGINEER — MICHAEL M. ALVAREZ — No. C67407 — EXP. 06/30/15 — CIVIL — STATE OF CALIFORNIA

COUNTY OF SAN LUIS OBISPO – PUBLIC WORKS DEPARTMENT					
SITE PLAN					
SHANDON STATE WATER PROJECT TURNOUT					
Designer	Date	Drawn By	Date	Design Engineer	Date
B. HALE	12/05/14	MG	12/05/14	M. ALVAREZ	12/05/14

0 1 2 3
ORIGINAL SCALE IN INCHES FOR REDUCED PLANS

ROAD NO.	JOB NO.	SHEET NO.	TOTAL SHEETS
	300463	4	15

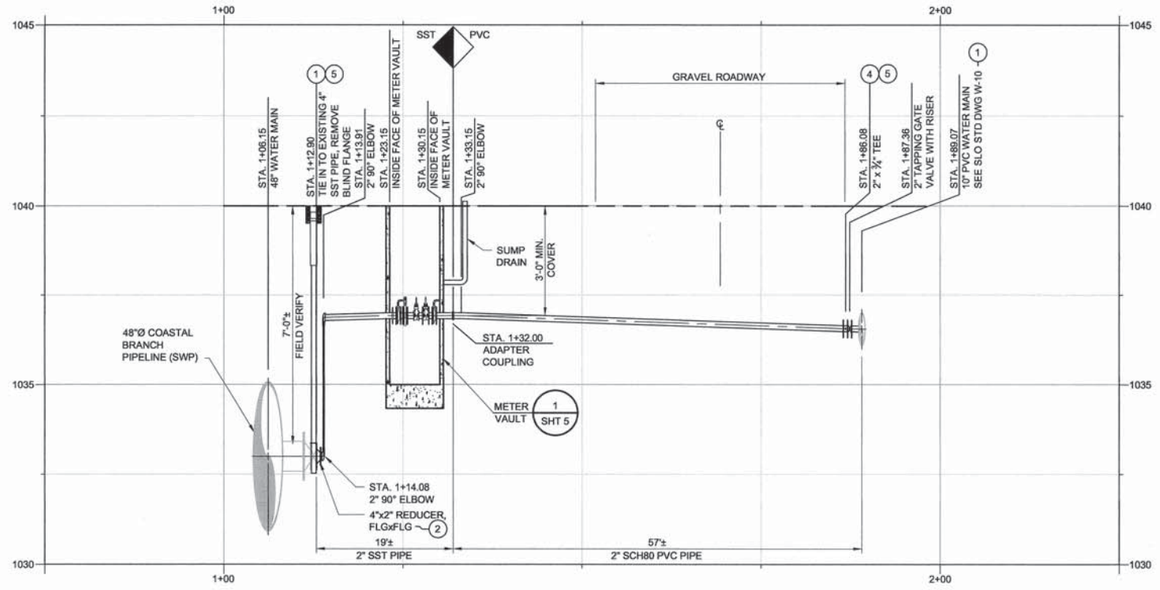

0 10' 20' H: 1" = 10'
0 2' 4' V: 1" = 2'

A | **2" PIPE TURNOUT PROFILE**
SHT 4
Scale: 1" = 10' H, 1" = 2' V

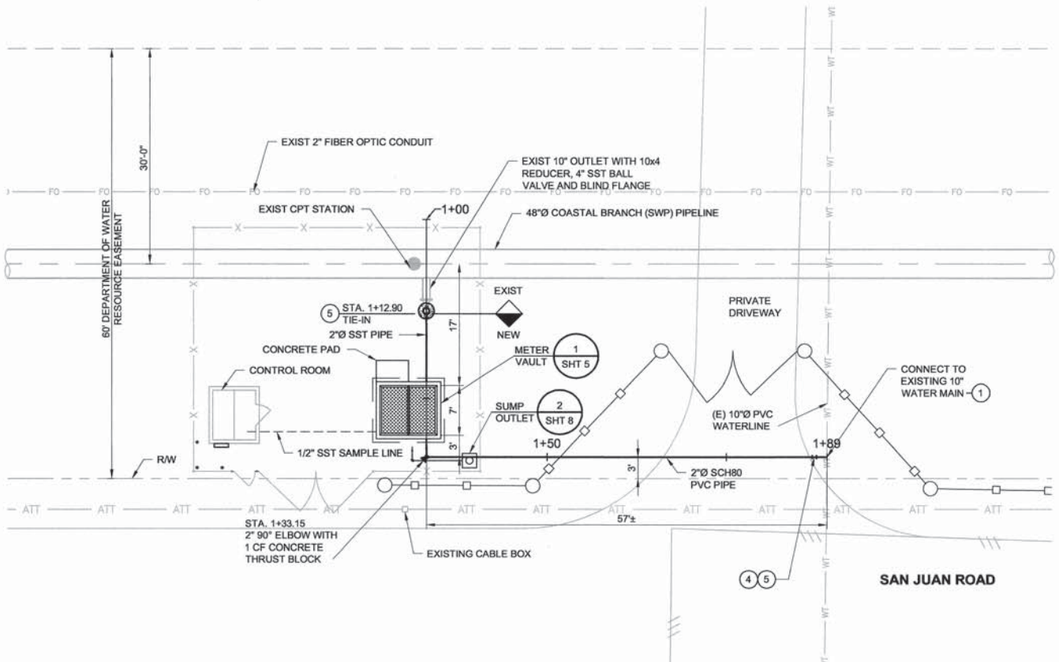

0 10' 20'
1" = 10'

1 | **PIPE PLAN**
SHT 4
Scale: 1" = 10'

0 1 2 3
ORIGINAL SCALE IN INCHES FOR REDUCED PLANS

NOTES:

1. POTHOLE CONNECTION POINT AND VERIFY LOCATION, ELEVATION, SIZE AND CONDITION OF EXISTING UTILITY INSTALL TAPPING SLEEVE PER SLO STD DWG W-10.
2. CLOSE BALL VALVE, THEN REMOVE EXISTING BLIND FLANGE AND INSTALL SST REDUCER.
3. REFER TO SHT 3 FOR SITE PLAN.
4. 2" TAPPING GATE VALVE PER SLO COUNTY STD DWG W-10.
5. VALVE ANCHOR AND BOX PER SLO COUNTY STD DWG W-3 AND VALVE CAN ACCESS. INSTALL INSULATING FLANGE KIT.

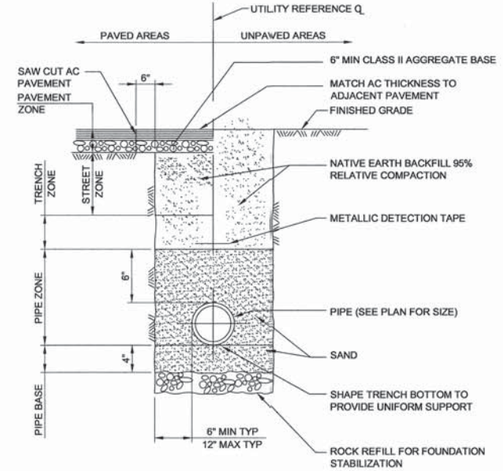

NOTE:

REFER TO COUNTY OF SAN LUIS OBISPO STANDARD DRAWING R-3 FOR ROADWAY TRENCHING AND REPAIR.

2 | **TRENCH DETAIL**
-
NOT TO SCALE

APPROVED FOR CONSTRUCTION

State of California
Department of Water Resources

REGISTERED PROFESSIONAL ENGINEER
No. C67461
EXP. 06/30/15
CIVIL
STATE OF CALIFORNIA

COUNTY OF SAN LUIS OBISPO – PUBLIC WORKS DEPARTMENT					
2–INCH PIPELINE – PLAN AND PROFILE					
SHANDON STATE WATER PROJECT TURNOUT					
Designer	Date	Drawn By	Date	Design Engineer	Date
B. HALE	12/05/14	MG	12/05/14	M. ALVAREZ	12/05/14

ROAD NO.	JOB NO.	SHEET NO.	TOTAL SHEETS
	300463	5	15

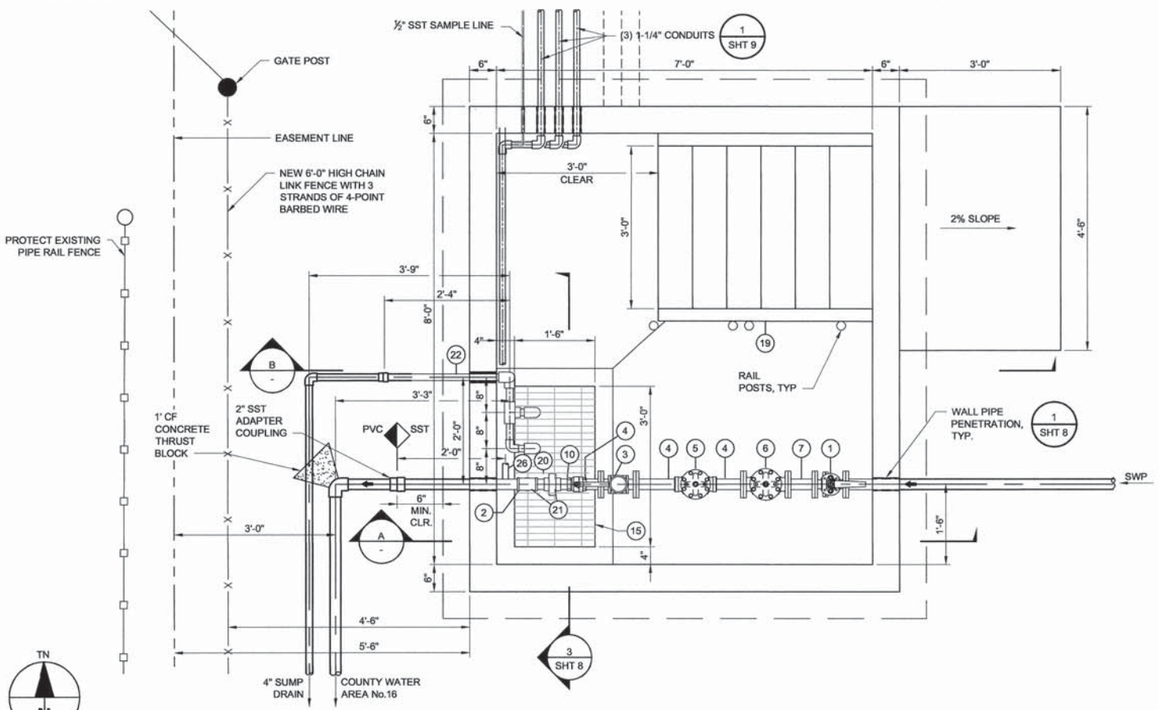

1 | PLAN (SHT 3, SHT 4)

Scale: 3/4" = 1'-0"

COMPONENT SCHEDULE

ITEM	DESCRIPTION MATIERAL
1	2" SST BALL VALVE, FLG x FLG, TYPE 101
2	2"x2"x1/2"x3/4" SST CROSS, NPT x NPT x NPT x NPT
3	2" MAGNETIC FLOW METER, FLG x FLG
4	2"Ø SST PIPE SPOOL, FLG x NPT
5	2" SST PRESSURE REDUCING VALVE, NPT x NPT
6	2" SST PRESSURE REDUCING VALVE, FLG x FLG
7	2"Ø x 6" SST PIPE SPOOL, FLG x FLG
8	PIPE SUPPORTS, SEE 5 SHT 8
9	½" SST AIR RELEASE VALVE, TYPE 401 WITH ½" SST BALL VALVE, TYPE 102
10	2" SST BALL VALVE, NPT x NPT, TYPE 101
11	3/4" SST BALL VALVE, NPT x NPT, TYPE 102
12	3/4" SST PRESSURE RELIEF VALVE, NPT x NPT, TYPE 301
13	3/4"Ø SST NIPPLE, NPT
14	2 - SUMP PUMPS. REFER TO SPECIFICATION 22 14 29.

COMPONENT SCHEDULE

ITEM	DESCRIPTION MATIERAL
15	18" x 36" x 12" MIN. DEPTH PRECAST SUMP WITH F.R.P. GRATE SHALL HAVE 1½" x 1½" x 1/4" ANGLE SUPPORT FRAMING WITH ANCHORS TO CONCRETE SLAB. 3 SHT 8
16	7'-0" x 8'-0" DOUBLE LEAF ALUMINUM ACCESS HATCH (H20S)
17	WALL PENETRATION, SEE 1 SHT 8
18	2"Ø SST SCH 80 PIPE EPOXY COATING
19	ALUMINUM STAIRS
20	2" SST UNION
21	2"Ø SST NIPPLE
22	4"Ø PVC SCH 80 SUMP PUMP DISCHARGE PIPE
23	3/4"x3/4"x1/2" SST TEE, NPT x NPT x NPT
24	PRESSURE INDICATOR TRANSMITTER AND TAP FOR SENSING LINE
25	INSULATED FLANGE KIT. REFER TO SPECIFICATION 33 10 00
26	2"Ø SST TEE, NPT x NPT x NPT SEE DTL 3 ON SHEET 8

NOTE: REFER TO SPECIFICATION 33 10 00 FOR VALVE TYPES.

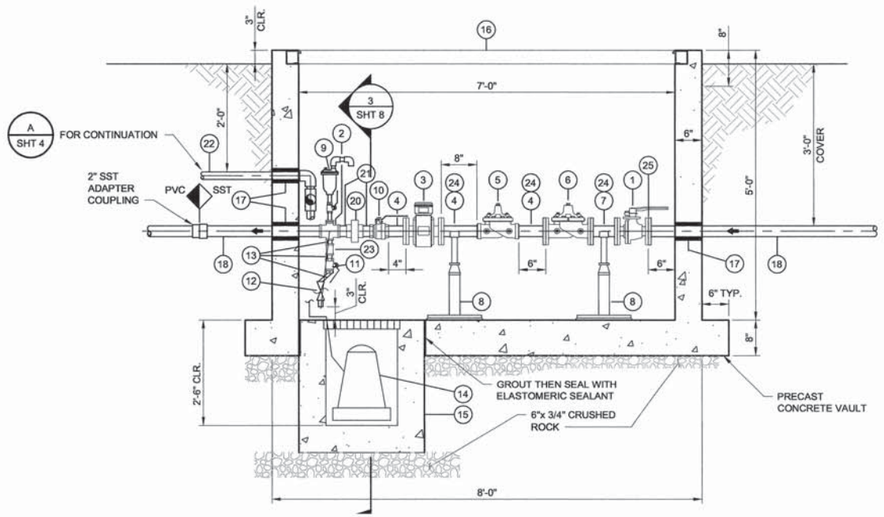

A | SECTION

Scale: 3/4" = 1'-0"

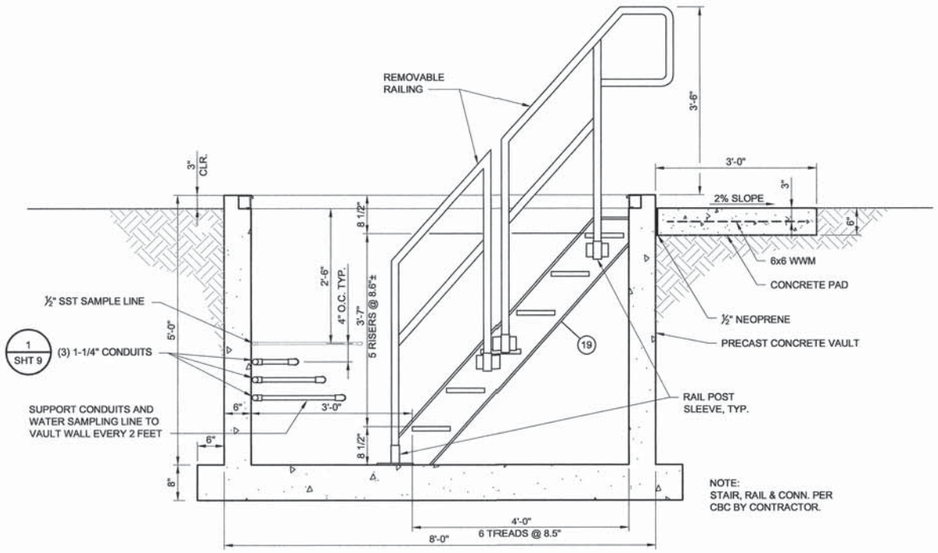

B | SECTION

Scale: 3/4" = 1'-0"

APPROVED FOR CONSTRUCTION

State of California
Department of Water Resources

REGISTERED PROFESSIONAL ENGINEER M. ALVAREZ No. C67405 EXP. 06/30/15 CIVIL STATE OF CALIFORNIA

COUNTY OF SAN LUIS OBISPO – PUBLIC WORKS DEPARTMENT					
METER VAULT AND SECTIONS					
SHANDON STATE WATER PROJECT TURNOUT					
Designer	Date	Drawn By	Date	Design Engineer	Date
B. HALE	12/05/14	MG	12/05/14	M. ALVAREZ	12/05/14

0 1 2 3
ORIGINAL SCALE IN INCHES FOR REDUCED PLANS

ROAD NO.	JOB NO.	SHEET NO.	TOTAL SHEETS
	300463	6	15

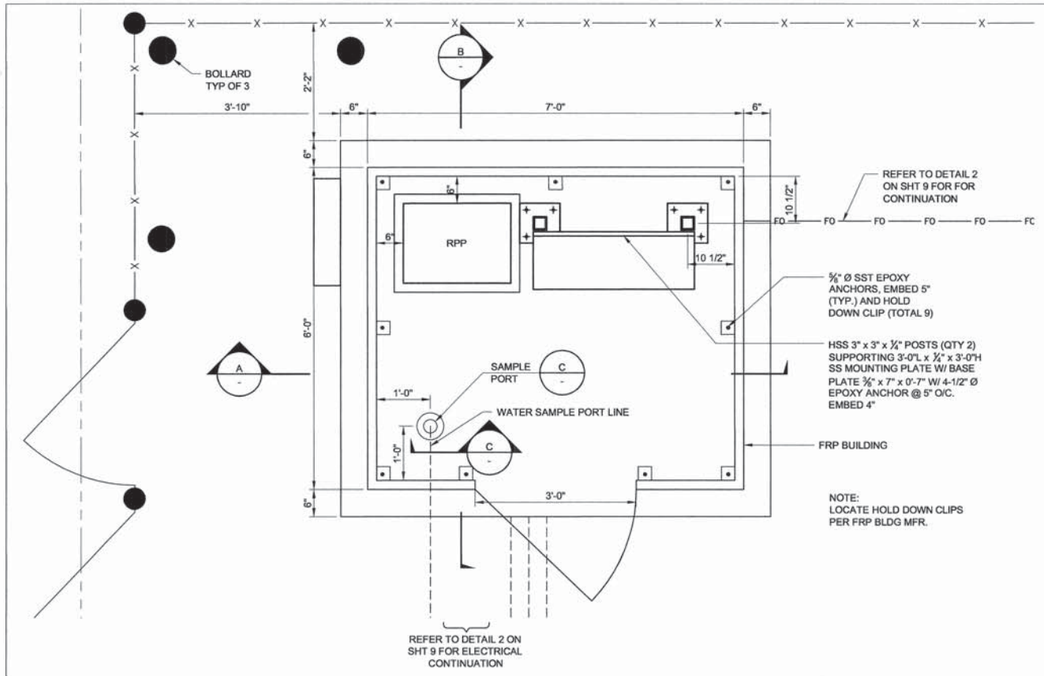

1 | PLAN
SHT 3 | Scale: 3/4" = 1'-0"

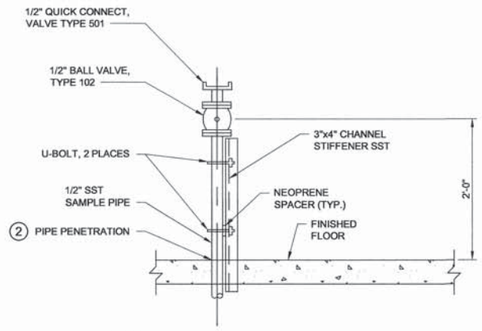

NOTES:
1. REFER TO SPECIFICATION 33 10 00 FOR VALVE TYPES.
2. WRAP PIPE WITH PIPE TAPE & CAST IN CONCRETE.

C | SAMPLE PORT (1)
- | Scale: 3/4" = 1'-0"

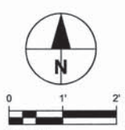

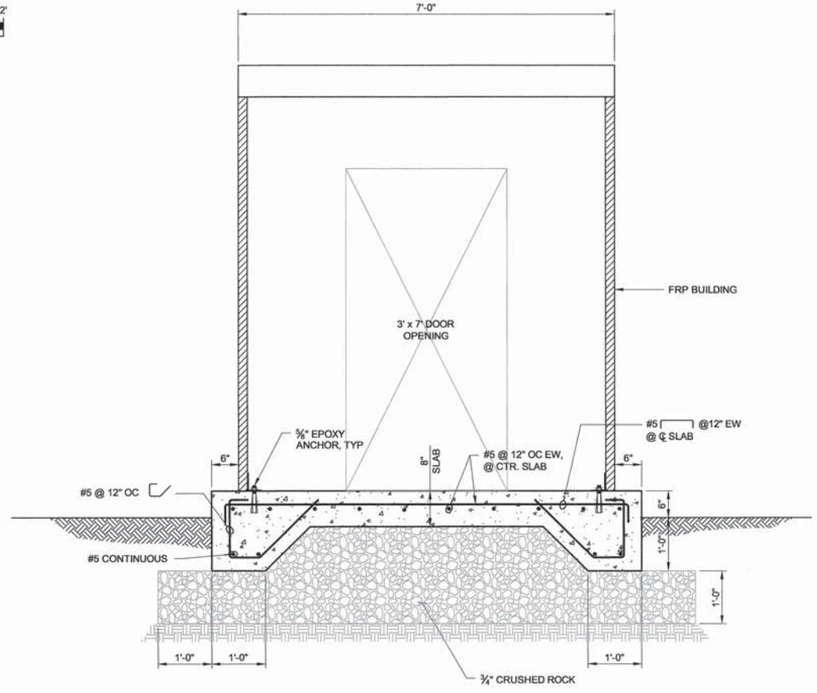

A | SECTION
- | Scale: 3/4" = 1'-0"

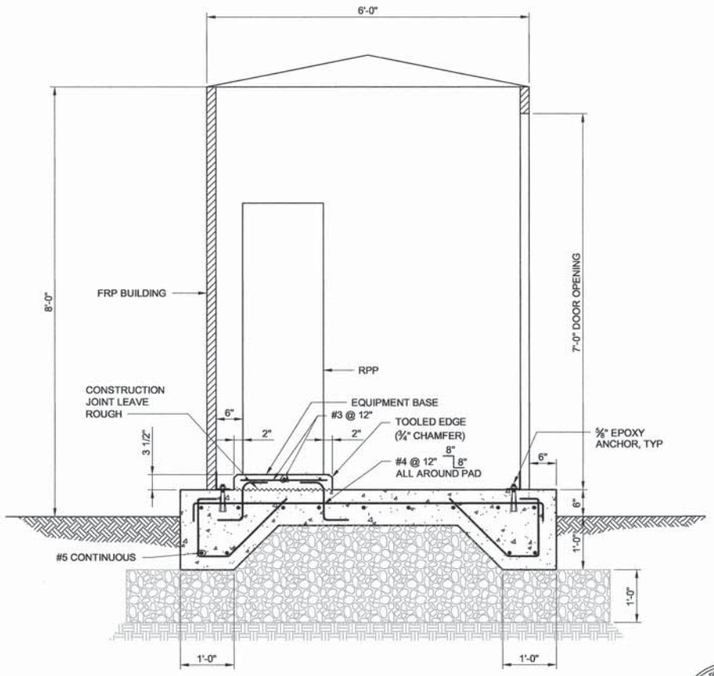

B | SECTION
- | Scale: 3/4" = 1'-0"

APPROVED FOR CONSTRUCTION

State of California
Department of Water Resources

REGISTERED PROFESSIONAL ENGINEER
DAVID J. SOMERVILLE
No. 51572
EXP. 6-30-15
STRUCTURAL
STATE OF CALIFORNIA

0 1 2 3
ORIGINAL SCALE IN INCHES FOR REDUCED PLANS

COUNTY OF SAN LUIS OBISPO – PUBLIC WORKS DEPARTMENT

CONTROL BUILDING AND SECTIONS

SHANDON STATE WATER PROJECT TURNOUT

Designer	Date	Drawn By	Date	Design Engineer	Date
B. HALE	12/05/14	MG	12/05/14	M. ALVAREZ	12/05/14

ROAD NO.	JOB NO.	SHEET NO.	TOTAL SHEETS
	300463	7	15

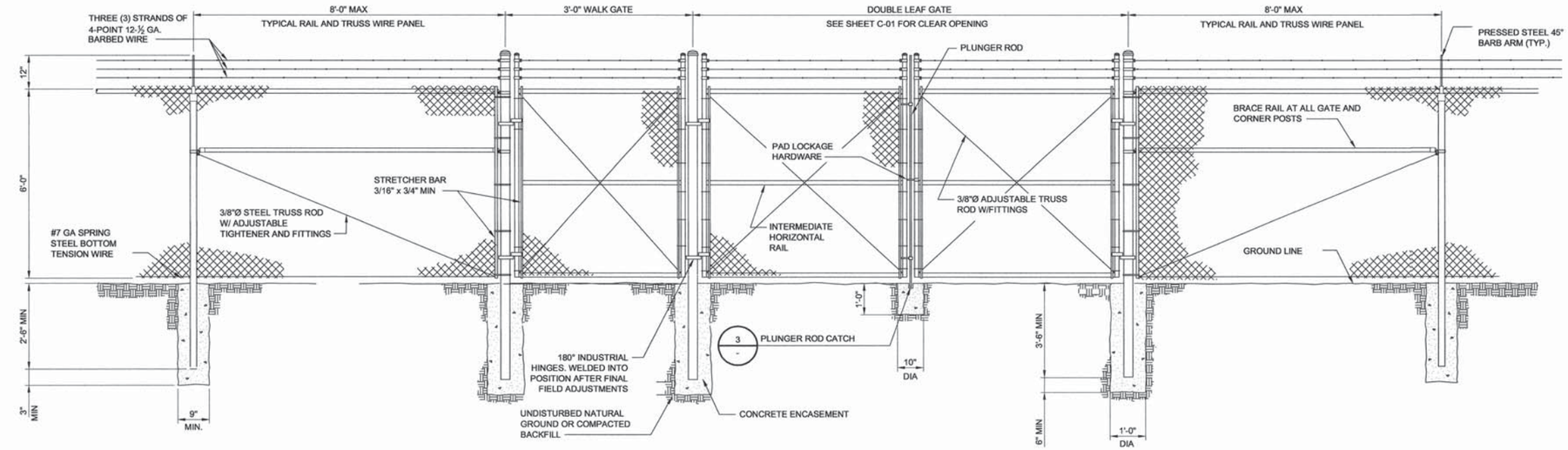

1 | DOUBLE LEAF GATE DETAIL
SHT 3 — SCALE: NTS

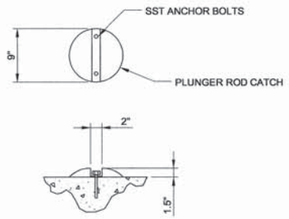

3 | PLUNGER ROD CATCH
SCALE: NTS

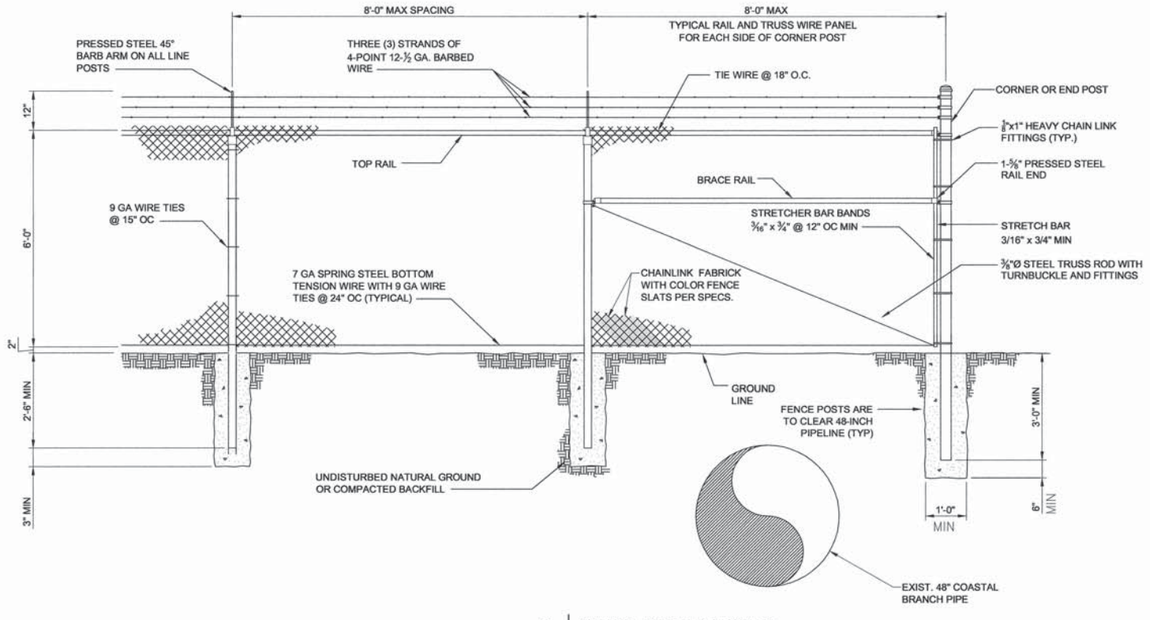

2 | TYPICAL FENCE ELEVATION
SHT 3 — SCALE: NTS

POST & MATERIALS TABLE

LINE POSTS	2-3/8" OD SCH 40 PIPE
CORNER & END POSTS	2-7/8" OD SCH 40 PIPE
TOP RAIL	1-5/8" OD SCH 40 PIPE
DRIVE GATE POSTS	4-1/2" OD SCH 40 PIPE
CHAIN LINK FABRIC	9 GA WIRE 2" DIAMOND WIRE, KNUCKLED TOP & BOTTOM
GATE FRAMES	1-7/8" OD SCH 40 PIPE
TENSION WIRE	7 GA GALV COIL SPRING STEEL
TRUSS RODS	3/8" GALV STEEL
BRACE RAIL	1-5/8" OD SCH 40 PIPE

NOTE: FENCE TO BE 1' INSIDE PROPERTY LINE UNLESS NOTED OTHERWISE.

APPROVED FOR CONSTRUCTION

State of California
Department of Water Resources

COUNTY OF SAN LUIS OBISPO – PUBLIC WORKS DEPARTMENT					
CHAIN LINK FENCE AND GATE DETAILS					
SHANDON STATE WATER PROJECT TURNOUT					
Designer	Date	Drawn By	Date	Design Engineer	Date
B. HALE	12/05/14	MG	12/05/14	M. ALVAREZ	12/05/14

0 1 2 3
ORIGINAL SCALE IN INCHES FOR REDUCED PLANS

ROAD NO.	JOB NO.	SHEET NO.	TOTAL SHEETS
	300463	8	15

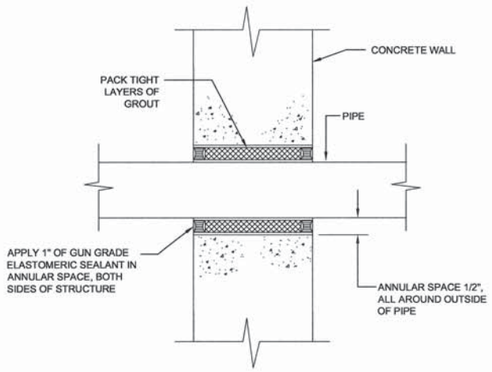

1 WALL PIPE PENETRATION

SHT 5, SHT 6 — NOT TO SCALE

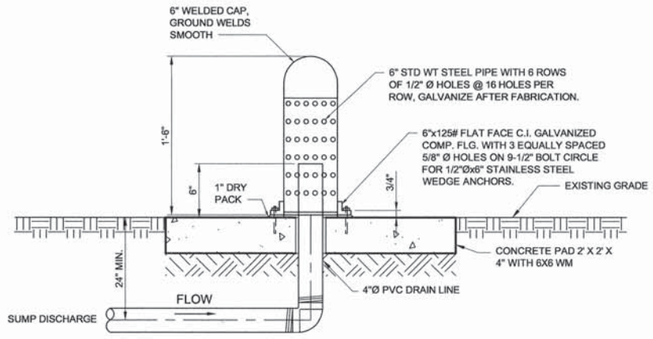

2 DRAIN DISCHARGE ASSEMBLY DETAIL

SHT 3 — NOT TO SCALE

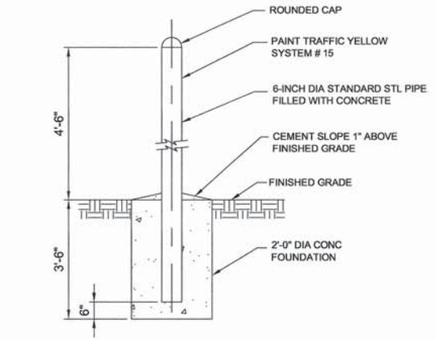

4 BOLLARD

SHT 3 — NOT TO SCALE

PIPE DIA (IN)	'A'	'B'	'C'	'D' MIN	'D' MAX
2	2 1/2	9	1 1/2	8	13

1. PROVIDE HALF ROUND RIGID INSULATION & INSULATION PROTECTION SHIELD, SIMILAR TO GRINNELL FIG 167 OR B-LINE B-3151.
2. PROVIDE NEOPRENE WAFFLE ISOLATION PAD SIMILAR TO MASON TYPE 'W' OR KORFUND KORPAD 40, UNDER SUPPORT FOOT WHEN PIPING IS ISOLATED OR SUPPORT IS ADJACENT TO MECHANICAL EQUIPMENT
3. SEE TABLE FOR BASE, HEIGHT, & FLANGE DIMENSIONS

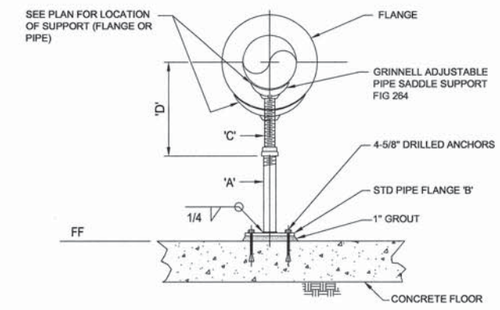

5 PIPE SUPPORT

SHT 5 — NOT TO SCALE

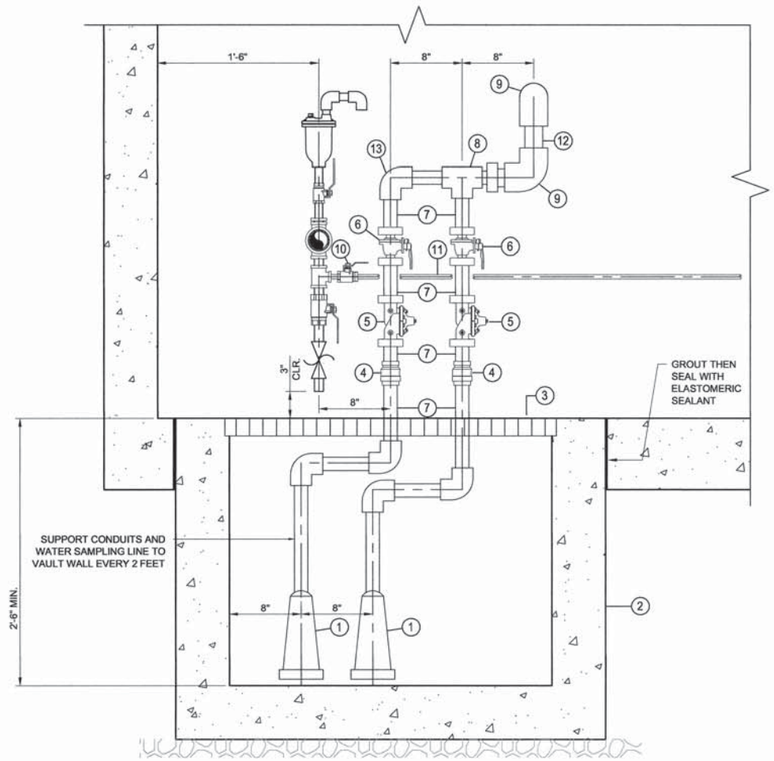

COMPONENT SCHEDULE

ITEM	DESCRIPTION MATERIAL
1	2 - SUMP PUMPS. REFER TO SPECIFICATION 22 14 29.
2	18" x 36" x 2'-6" MIN. DEPTH PRECAST SUMP
3	F.R.P. GRATE SHALL HAVE 1 ½" x 1½" x 1¼" ANGLE SUPPORT FRAMING WITH ANCHORS TO CONCRETE SLAB.
4	2" QUICK DISCONNECT, TYPE 501
5	2" CHECK VALVE, PVC, NPT x NPT, TYPE 201
6	2" BALL VALVE, PVC, NPT x NPT, TYPE 103
7	2"Ø PVC SCH80 SUMP PUMP DISCHARGE PIPE
8	2" x 2" x 4" SCH80 PVC TEE
9	4" 90-DEGREE SCH80 PVC ELBOW
10	½" SST BALL VALVE, NPT x NPT, TYPE 102
11	½"Ø SST SAMPLE LINE
12	4"Ø PVC SCH 80 SUMP PUMP DISCHARGE PIPE
13	2" 90-DEGREE SCH80 PVC ELBOW

NOTE: REFER TO SPECIFICATION 33 10 00 FOR VALVE TYPES.

3 METERING VAULT ENLARGED

SHT 5 — NOT TO SCALE

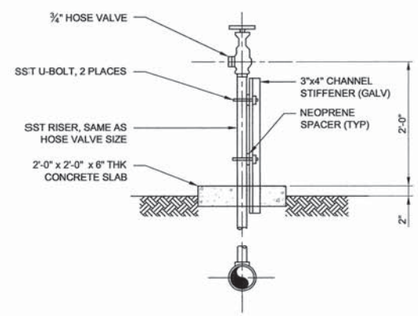

6 HOSE BIBB

SHT 3 — NOT TO SCALE

APPROVED FOR CONSTRUCTION

State of California
Department of Water Resources

REGISTERED PROFESSIONAL ENGINEER — M. ALVAREZ — No. C67401 — EXP. 06/30/15 — CIVIL — STATE OF CALIFORNIA

COUNTY OF SAN LUIS OBISPO – PUBLIC WORKS DEPARTMENT					
DETAILS					
SHANDON STATE WATER PROJECT TURNOUT					
Designer	Date	Drawn By	Date	Design Engineer	Date
B. HALE	12/05/14	MG	12/05/14	M. ALVAREZ	12/05/14

0 1 2 3 ORIGINAL SCALE IN INCHES FOR REDUCED PLANS

ROAD NO.	JOB NO.	SHEET NO.	TOTAL SHEETS
	300463	9	15

Revisions					
Description	Approved	Date	Description	Approved	Date
REVISE NOTES 2 AND 5	PH	AUG 14			

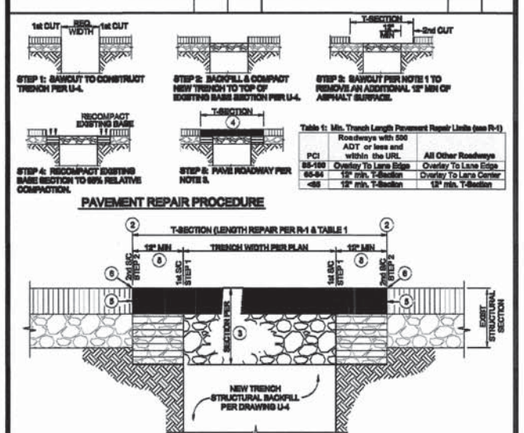

Table 1: Min. Trench Length Pavement Repair Limits (see R-1)

PCI	Roadways with 500 ADT or less and within the URL	All Other Roadways
85-100	Overlay To Lane Edge	Overlay To Lane Edge
65-84	12" min. T-Section	Overlay To Lane Center
<65	12" min. T-Section	12" min. T-Section

PAVEMENT REPAIR PROCEDURE

SECTION VIEW

NOTES:
1. TRENCHING IN A ROADWAY IS ONLY ALLOWED WHEN BORING IS SHOWN TO THE DEPARTMENT AS BEING INFEASIBLE.
2. SAWCUT TO REMOVE DAMAGED OR FAILED PAVEMENT SECTION ADJACENT TO THE SIDES OF TRENCH AS NECESSARY TO PROVIDE A CLEAN JOIN LINE. ALL SAWCUTS SHALL BE PERPENDICULAR OR PARALLEL TO THE TRAVEL LANE. BEVELS SHALL NOT BE ALLOWED WITHIN DESIGNATED BICYCLE LANES. ALL CUT EDGES SHALL BE VERTICAL WITH SQUARE CORNERS AND SHALL BE STRAIGHT AND NEAT IN APPEARANCE. ALL SAWCUTS SHALL BE TO MINIMUM SHOWN OR TO COMPETENT PAVEMENT SECTION.
3. THE STRUCTURAL ROAD REPAIR SECTION SHALL MATCH THE EXISTING STRUCTURAL SECTION THICKNESS OR AS REQUIRED BY THE DEPARTMENT. TYPICAL ROAD WIDENING SECTION SHALL BE:
   - 6" MINIMUM HOT MIX ASPHALT (HMA), OVER
   - 12" MINIMUM CLASS II AGGREGATE BASE, OVER
   - TRENCH SECTION PER DRAWING U-4 (STRUCTURAL BACKFILL TO 95% MIN RELATIVE COMPACTION)
4. NEW PAVEMENT SHALL BE PLACED IN LIFTS NOT EXCEEDING 3-INCHES (COMPACTED).
5. A TACK COAT SHALL BE APPLIED TO ALL HORIZONTAL AND VERTICAL CONFORM SURFACES PRIOR TO PAVING.
6. AFTER PAVING, APPLY SMITH OIL (OR APPROVED EQUAL) TO ALL HMA SURFACE EDGES PER MANUFACTURERS RECOMMENDATIONS.
7. THE DEPARTMENT SHALL PROVIDE ADDITIONAL REQUIREMENTS WHEN TRENCHING IN EXISTING ROADS HAVING CONCRETE STRUCTURAL SECTIONS.
8. T-SECTION WIDTHS SHALL BE INCREASED AS DIRECTED BY THE DEPARTMENT FOR UTILITY PIPES EXCEEDING 30" IN DIAMETER.

DEPARTMENT OF PUBLIC WORKS & TRANSPORTATION

TRENCH REPAIR

TRANSVERSE TRENCHES AND BORE PITS

Scale:	Adopted:
NTS	2014
Drawing No:	R-3
Sheet No:	1 OF 1

Revisions					
Description	Approved	Date	Description	Approved	Date
NOTE 1, CONCRETE COLLAR NOTE	REM	NOV 07			

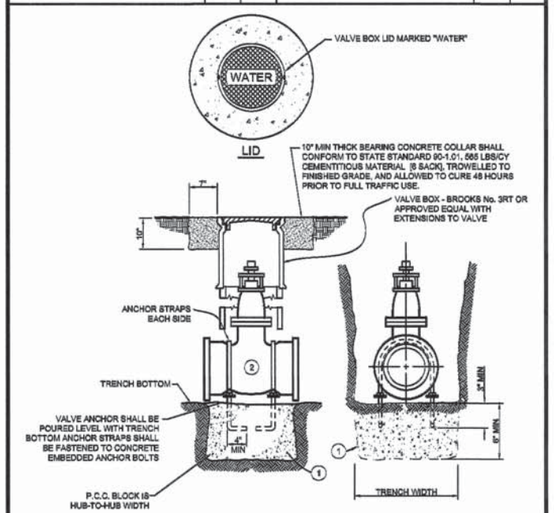

NOTES:
1. CONCRETE THRUST BLOCKS SHALL CONFORM TO STATE STANDARD 90-1.01, 470 LBS/CY CEMENTITIOUS MATERIAL (5 SACK), AND POURED AGAINST UNDISTURBED NATIVE SOIL.
2. VALVES SHALL HAVE NON-RISING STEM, RESILIENT WEDGE, RESILIENT SEAT, AND BE EPOXY COATED.
3. ALL MATERIALS AND INSTALLATION SHALL CONFORM WITH THE APPLICABLE SECTIONS OF THE DESIGN STANDARDS.
4. ALL FITTINGS SHALL BE WRAPPED IN POLYETHYLENE SHEET AND ALL FLANGES AND BOLTS SHALL BE SHIELDED FROM CONCRETE PER THE DESIGN STANDARDS.
5. UNDER NO CIRCUMSTANCES SHALL UTILITY LIDS AND CONCRETE COLLARS BE LOCATED WITHIN CURBS, GUTTERS, SIDEWALKS, DRIVEWAY APRONS, CURB RAMPS, OR CROSS GUTTERS.

DEPARTMENT OF PUBLIC WORKS & TRANSPORTATION

VALVE ANCHOR & BOX

Scale:	Adopted:
NTS	2011
Drawing No:	W-3
Sheet No:	1 OF 1

Revisions					
Description	Approved	Date	Description	Approved	Date
THRUST BLOCK NOTES	REM	NOV 07			

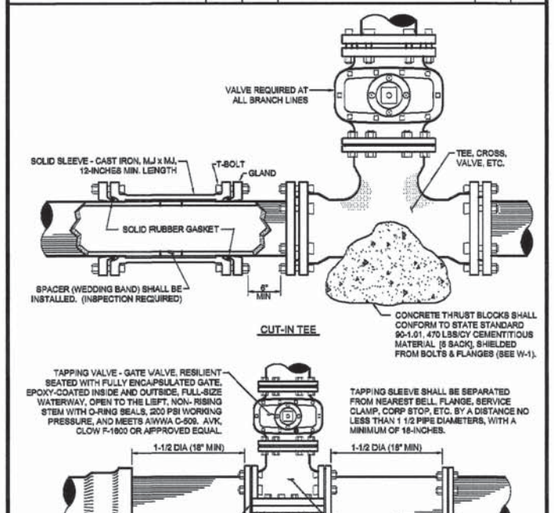

DEPARTMENT OF PUBLIC WORKS & TRANSPORTATION

WATERLINE CUT-IN TEE & HOT TAP ASSEMBLY

Scale:	Adopted:
NTS	2011
Drawing No:	W-10
Sheet No:	1 OF 1

APPROVED FOR CONSTRUCTION

State of California
Department of Water Resources

REGISTERED PROFESSIONAL ENGINEER — M. ALVAREZ — No. C67457 EXP. 06/30/15 — CIVIL — STATE OF CALIFORNIA

0 1 2 3
ORIGINAL SCALE IN INCHES FOR REDUCED PLANS

COUNTY OF SAN LUIS OBISPO – PUBLIC WORKS DEPARTMENT

DETAILS

SHANDON STATE WATER PROJECT TURNOUT

Designer	Date	Drawn By	Date	Design Engineer	Date
B. HALE	12/05/14	MG	12/05/14	M. ALVAREZ	12/05/14

ROAD NO.	JOB NO.	SHEET NO.	TOTAL SHEETS
	300463	10	15

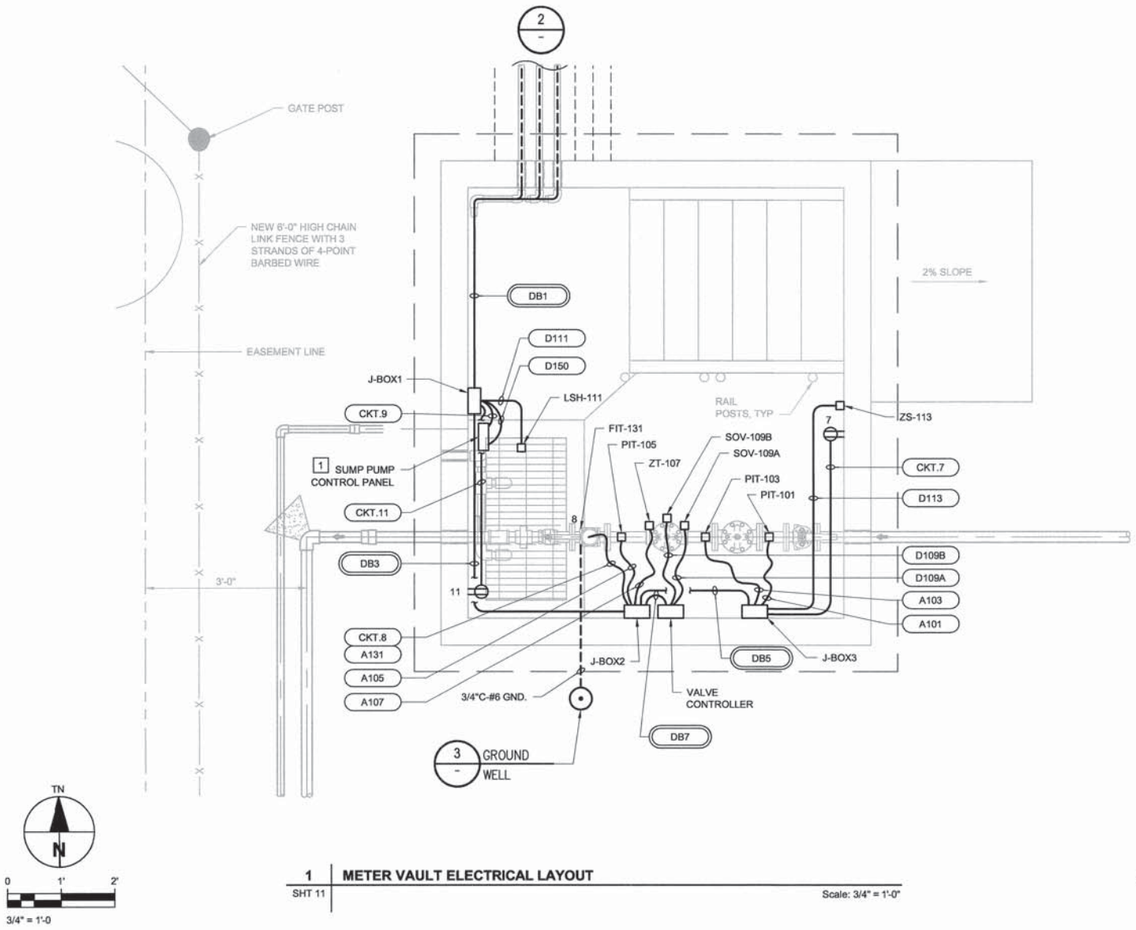

1 | METER VAULT ELECTRICAL LAYOUT
SHT 11 | Scale: 3/4" = 1'-0"

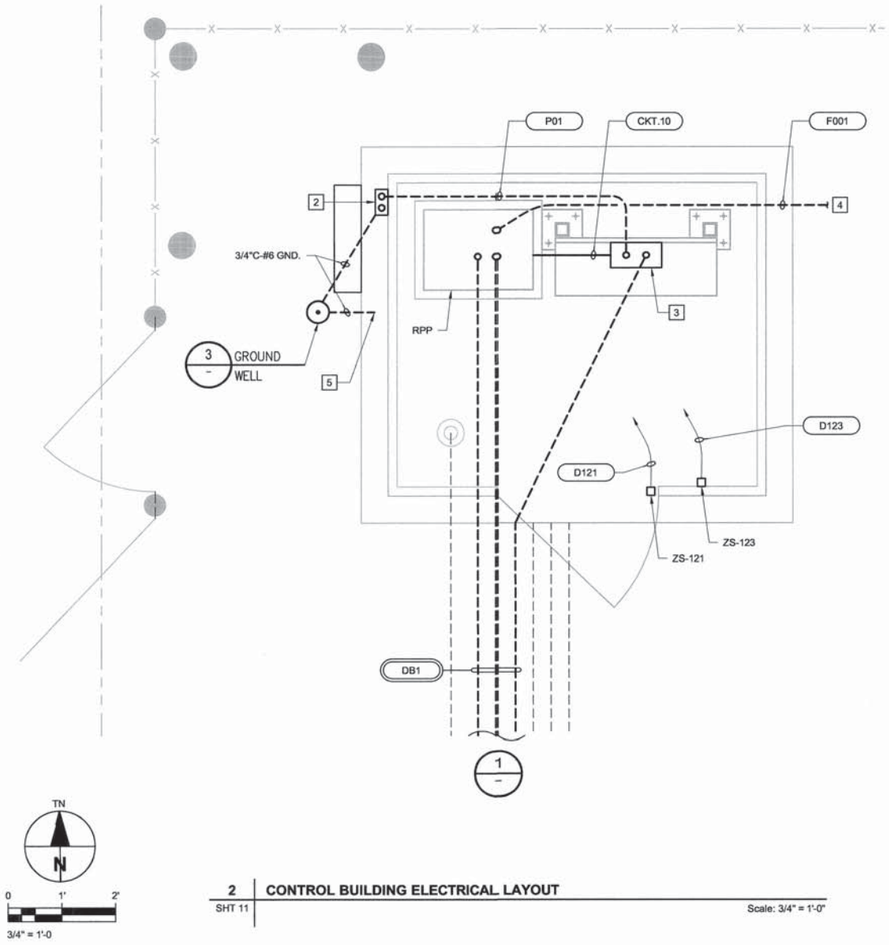

2 | CONTROL BUILDING ELECTRICAL LAYOUT
SHT 11 | Scale: 3/4" = 1'-0"

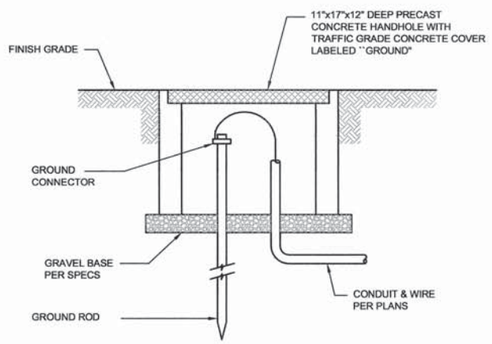

3 | GROUND WELL DETAIL
NOT TO SCALE

NOTES:

1. CONNECT FLOATS PER DETAIL 5, SHEET 14. PROVIDE CORD GRIPS FOR PUMP CABLE ENTRY INTO BOTTOM OF PANEL.
2. SERVICE METER BOX.
3. PANELBOARD-A.
4. SEE SHEET NO. 11 FOR CONNECTION POINT.
5. BOND TO REBAR

LEGEND:

- GFI RECEPTACLE
- EXPOSED CONDUIT OR DUCKBANK
- EMBEDDED CONDUIT OR DUCTBANK
- FLEXIBLE CONDUIT
- CONDUIT BENDS TOWARD OBSERVER
- HOMERUN
- CONDUIT REFERENCE
- DUCTBANK REFERENCE

APPROVED FOR CONSTRUCTION

State of California
Department of Water Resources

REGISTERED PROFESSIONAL ENGINEER
ALLEN J. HANDELL
No. E9206
Exp. 9/30/15
ELECTRICAL
STATE OF CALIFORNIA

COUNTY OF SAN LUIS OBISPO – PUBLIC WORKS DEPARTMENT
ELECTRICAL PLAN AND CONTROL BUILING
SHANDON STATE WATER PROJECT TURNOUT

Designer	Date	Drawn By	Date	Design Engineer	Date
B. HALE	12/05/14	MG	12/05/14	M. ALVAREZ	12/05/14

0 1 2 3
ORIGINAL SCALE IN INCHES FOR REDUCED PLANS

ROAD NO.	JOB NO.	SHEET NO.	TOTAL SHEETS
	300463	11	15

NAMEPLATE: A	FED FROM: SERVICE METER				MOUNTING: SURFACE				ENCLOSURE: NEMA 1			
BUS: 100A	VOLTAGE: 120/240, 1-Ph, 3-W				AVAILABLE SC (kA): 7.6			KAIC: 10	TOP/ BOTTOM FEED: SEE PLANS			
LOCATION: CONTROL BUILDING					MAIN BREAKER (AMPS): MLO / 2P							

DESCRIPTION	LOAD VA A	LOAD VA B		NOTES	QTY	BRKR TRIP	BRKR P	CKT REF		BRKR P	BRKR TRIP	QTY	NOTES	LOAD VA A	LOAD VA B		DESCRIPTION
LIGHTING IN CONTROL ROOM	200					20	1	1	2	2	40		M				MAIN INCOMING
REC IN CONTROL ROOM		360				20	1	3	4								
FAN IN CONTROL ROOM	300					20	1	5	6	1	20						SPARE
REC IN VAULT		180				20	1	7	8	1	20				20		FIT-131
SUMP PUMP CP	200					20	1	9	10	1	20			200			RPP
REC IN VAULT		200				20	1	11	12	1	20				200		VALVE CONTROLLER
SPARE						20	1	13	14	1	20						SPARE
SPARE						20	1	15	16	1	20						SPARE
SPARE						20	1	17	18	1	20						SPARE
SPARE						20	1	19	20	1	20						SPARE
TOTAL VA (Odd Ckts)/ PH	700	740												200	220		TOTAL VA (Even Ckts)/ PH
TOTAL VA (All Ckts)/ PH	900	960															
TOTALS = 1860VA AVERAGE AMPS/PH= 8A																	
AVERAGE: VA / PH= 930VA																	

NOTES
- VA SUMS AND AVERAGES ARE ROUNDED TO THE NEAREST : 10 VA.
- QUANTITIES IN 'QTY' COLUMN, IF ANY, INDICATE NUMBER OF POWER CONSUMING OUTLETS CONNECTED TO THE RELEVANT CIRCUIT.
- 'M' IN THE 'NOTES.' COLUMN' INDICATES THAT RELEVANT BRANCH BREAKER IS USED AS THE MAIN BREAKER OF THIS PANEL.
- THERE ARE NO CONTINUOUS LOADS OF SIGNIFICANCE FED FROM THIS PANELBOARD.

NUMBERED NOTES
(NOT USED)

1 | PANEL SCHEDULE

CONDUIT RUN REF.	CONDUIT SIZE	CONDUCTORS PER CONDUIT QTY	CONDUCTORS PER CONDUIT SIZE	CONDUCTORS PER CONDUIT GND	FROM	TO	REMARKS
P01	1"	3	# 6	# 8	SERVICE METER	A	
Ckt12	3/4"	2	# 12	# 12	A	VALVE CONTROLLER	Ckt 12
Ckt10	3/4"	2	# 12	# 12	A	RPP	Ckt 10
A101	3/4"	1	#18 TSP		RPP	PIT-101	
A103	3/4"	1	#18 TSP		RPP	PIT-103	
A105	3/4"	1	#18 TSP		RPP	PIT-105	
D100	3/4"	4	# 14	# 14	RPP	VALVE CONTROLLER	
A100	3/4"	2	#18 TSP		RPP	VALVE CONTROLLER	
A131	3/4"	1	#18 TSP		RPP	FIT-131	
		4	# 14				PULSE & FAIL SIGNALS
Ckt8	3/4"	2	# 12	# 12	A	FIT-131	Ckt 8
A107	3/4"	1	#18 TSP		RPP	ZT-107	
D109A	3/4"	2	# 14	# 14	VALVE CONTROLLER	SOV-109A	
D109B	3/4"	2	# 14	# 14	VALVE CONTROLLER	SOV-109B	
D111	3/4"	2	# 14	# 14	RPP	LSH-111	
D113	3/4"	2	# 14	# 14	RPP	ZS-113	
D121	3/4"	2	# 14	# 14	RPP	ZS-121	
D123	3/4"	2	# 14	# 14	RPP	ZS-123	
CKT7	3/4"	2	# 12	# 12	A	REC 7	
CKT9-11	3/4"	2	# 12	# 12	A	REC9-11	
F001	2"	1	FIBEROPTIC		RPP	EXISTING NETWORK	
D150	3/4"	4	# 14	# 14	RPP	SUMP PUMP CP	

2 | CONDUIT SCHEDULE

DB1		
DUCT	CONDUIT	REF
1-1/4"	3/4"	CKT7
	3/4"	Ckt8
	3/4"	CKT9-11
	3/4"	Ckt12
1-1/4"	3/4"	A101
	3/4"	A103
	3/4"	A105
	3/4"	A107
	3/4"	A100
	3/4"	A131
1-1/4"	3/4"	D111
	3/4"	D113
	3/4"	D100
	3/4"	D150

DB3		
DUCT	CONDUIT	REF
1-1/4"	3/4"	Ckt12
	3/4"	CKT7
	3/4"	Ckt8
1-1/4"	3/4"	A100
	3/4"	A101
	3/4"	A103
	3/4"	A105
	3/4"	A107
	3/4"	A131
1-1/4"	3/4"	D100
	3/4"	D113

DB5		
DUCT	CONDUIT	REF
3/4"	3/4"	CKT7
3/4"	3/4"	D113
1"	3/4"	A101
	3/4"	A103

DB7		
DUCT	CONDUIT	REF
3/4"	3/4"	Ckt12
3/4"	3/4"	D100
1"	3/4"	A100

DUCTBANK SCHEDULE NOTES

1. "DUCT" - SIZE OF CONDUIT THAT SHALL BE USED AS A MINIMUM TO REPLACE CONDUITS LISTED UNDER "CONDUIT", WHEN RUNNING AS PART OF REFERENCED DUCTBANK.
2. "CONDUIT" - SIZES AS USED IN CONDUIT SCHEDULE, OR AS REQUIRED BASE ON QUANTITY AND CONDUCTOR SIZES IF NOT SHOWN IN SCHEDULE. INCLUDED HERE FOR EASY REFERENCE.
3. "REF" - CONDUIT REFERENCE AS LISTED IN CONDUIT SCHEDULE WHOSE CONDUCTORS SHALL RUN IN THE DUCT. WHERE '(SPARE)' IS INDICATED, EMPTY CONDUITS OF SIZE AND QUANTITY INDICATED SHALL BE PROVIDED AS PART OF THAT DUCTBANK.

3 | DUCTBANK SCHEDULE

APPROVED FOR CONSTRUCTION

State of California
Department of Water Resources

REGISTERED PROFESSIONAL ENGINEER — JENNIFER A. ANDREW — No. E9206 Exp. 9/30/15 — ELECTRICAL — STATE OF CALIFORNIA

0 1 2 3 ORIGINAL SCALE IN INCHES FOR REDUCED PLANS

COUNTY OF SAN LUIS OBISPO – PUBLIC WORKS DEPARTMENT					
MISCELLANEOUS SCHEDULES					
SHANDON STATE WATER PROJECT TURNOUT					
Designer	Date	Drawn By	Date	Design Engineer	Date
B. HALE	12/05/14	MG	12/05/14	M. ALVAREZ	12/05/14

ROAD NO.	JOB NO.	SHEET NO.	TOTAL SHEETS
	300463	12	15

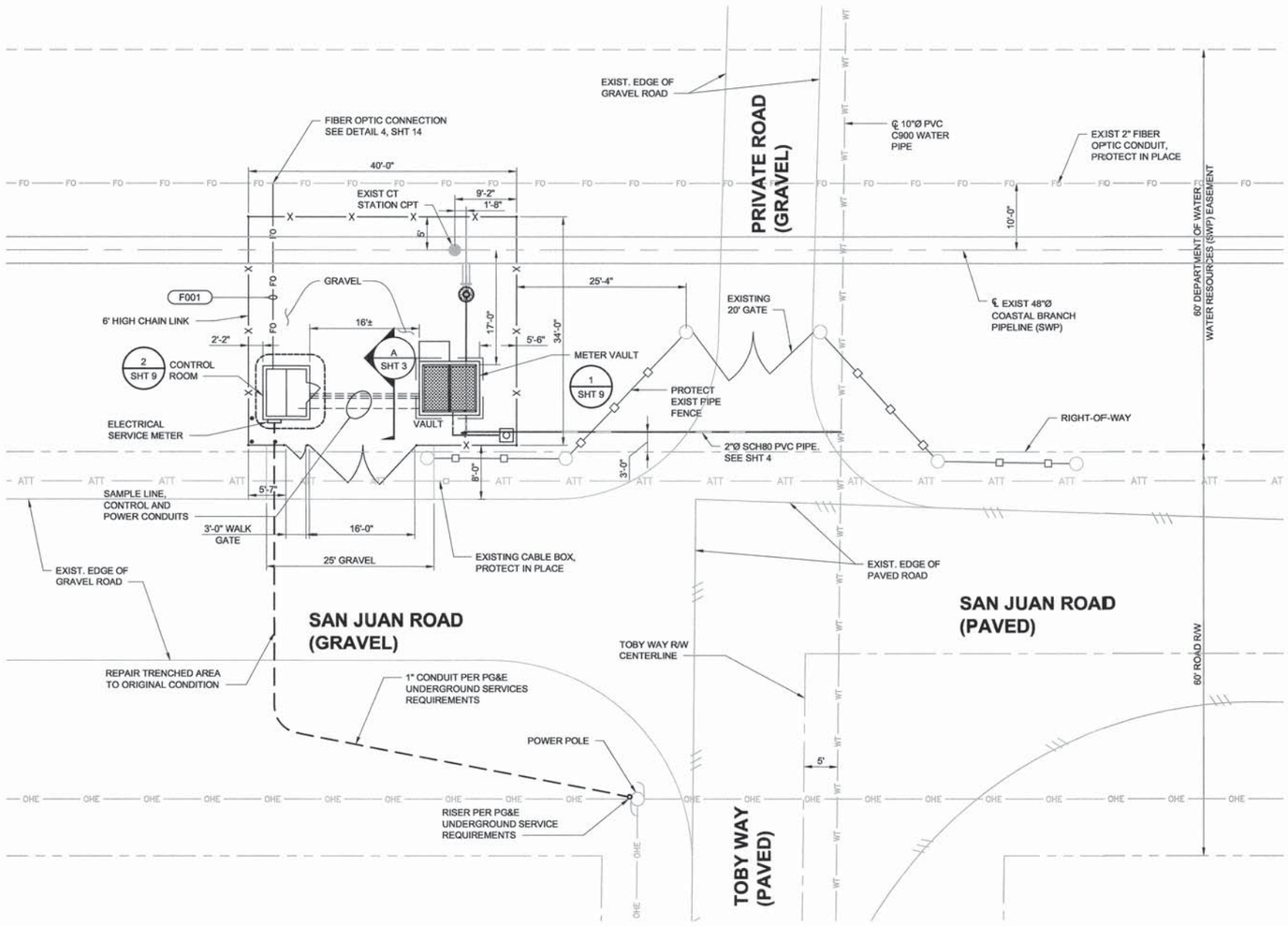

1 ELECTRICAL SITE PLAN

SCALE: 1" = 10'

APPROVED FOR CONSTRUCTION

State of California
Department of Water Resources

REGISTERED PROFESSIONAL ENGINEER — ANTON J. [illegible] — No. E9206 — Exp. 9/30/15 — ELECTRICAL — STATE OF CALIFORNIA

COUNTY OF SAN LUIS OBISPO – PUBLIC WORKS DEPARTMENT					
ELECTRICAL SITE PLAN					
SHANDON STATE WATER PROJECT TURNOUT					
Designer	Date	Drawn By	Date	Design Engineer	Date
B. HALE	12/05/14	MG	12/05/14	M. ALVAREZ	12/05/14

0 1 2 3
ORIGINAL SCALE IN INCHES FOR REDUCED PLANS

ROAD NO.	JOB NO.	SHEET NO.	TOTAL SHEETS
	300463	13	15

INTERNATIONAL SOCIETY OF AUTOMATION (ISA) TABLE

IDENTIFICATION LETTERS

	FIRST-LETTER		SUCCEEDING-LETTERS		
	MEASURED OR INITIATING VARIABLE	MODIFIER	READOUT OR PASSIVE FUNCTION	OUTPUT FUNCTION	MODIFIER
A	ANALYSIS		ALARM		
B	BURNER, COMBUSTION		USER'S CHOICE	USER'S CHOICE	USER'S CHOICE
C	CONDUCTIVITY			CONTROL	
D	USER'S CHOICE	DIFFERENTIAL			
E	VOLTAGE		SENSOR (PRIMARY ELEMENT)		
F	FLOW RATE	RATIO (FRACTION)			
G	USER'S CHOICE		GLASS, VIEWING DEVICE		
H	HAND				HIGH
I	CURRENT (ELECTRICAL)		INDICATE		
J	POWER	SCAN			
K	TIME, TIME SCHEDULE	TIME RATE OF CHANGE		CONTROL STATION	
L	LEVEL		LIGHT		LOW
M	USER'S CHOICE	MOMENTARY			MIDDLE, INTERMEDIATE
N	USER'S CHOICE		PLC/RTU INPUT	USER'S CHOICE	NORMAL
O	USER'S CHOICE		ORIFICE, RESTRICTION		
P	PRESSURE, VACUUM		POINT (TEST) CONNECTION		
Q	QUANTITY	INTEGRATE, TOTALIZE			
R	RADIATION		RECORD		
S	SPEED, FREQUENCY	SAFETY		SWITCH	
T	TEMPERATURE			TRANSMIT	
U	MULTIVARIABLE		MULTIFUNCTION	MULTIFUNCTION	MULTIFUNCTION
V	VIBRATION, MECHANICAL ANALYSIS			VALVE,DAMPER LOUVER	
W	WEIGHT, FORCE		WELL		
X	UNCLASSIFIED	X AXIS	UNCLASSIFIED(*)	UNCLASSIFIED(*)	UNCLASSIFIED(*)
Y	EVENT, STATE OR PRESENCE	Y AXIS		RELAY, COMPUTE CONVERT	
Z	POSITION, DIMENSION	Z AXIS		DRIVER, ACTUATOR, UNCLASSIFIED FINAL CONTROL ELEMENT	

INSTRUMENT LINE SYMBOLS

- PRIMARY PROCESS FLOW
- SECONDARY PROCESS FLOW, CONNECTION TO PROCESS FLOW, MECHANICAL LINK OR INSTRUMENT SUPPLY
- PNEUMATIC SIGNAL OR UNDEFINED SIGNAL FOR PROCESS FLOW DIAGRAMS
- CAPILLARY TUBING (FILLED SYSTEM)
- ELECTRIC SIGNAL (DISCRETE)
- ELECTRIC SIGNAL (ANALOG, TSP) (— — A — —)
- ELECTRIC SIGNAL (ANALOG, TST) (— — A3 — —)
- DATA COMMUNICATION
- BUILDING OR FACILITY BOUNDARY
- MULTI-CIRCUIT ELECTRIC SIGNALS (NUMBER OF SIGNALS ILLUSTRATED IN PARENTHESIS) (2)
- LOGICAL OR HARDWIRE SIGNAL NUMBER (SHOWN SIGNAL "O1" ORIGINATED IN DWG. I-5) (I–5 → 01)
- LOGICAL OR HARDWIRE SIGNAL NUMBER (SHOWN SIGNAL "O1" SENT TO DWG. I-5) (01 → I–5)

VALVES & GATES

- BUTTERFLY
- GATE
- KNIFE GATE
- SWING CHECK
- BALL
- GLOBE
- DIAPHRAGM
- PLUG
- ECCENTRIC PLUG
- LUBRICATED PLUG
- 3-WAY GLOBE
- BALL CHECK
- PRESSURE RELIEF VALVE
- PINCH VALVE
- MOTOR OPERATED BUTTERFLY (MODULATING) (M)
- MOTOR OPERATED BUTTERFLY (OPEN/CLOSE) (M)
- PRESSURE REDUCING REGULATOR
- SOLENOID CONTROL (S)
- 3-WAY SOLENOID (S)
- NEEDLE VALVE
- PINCH VALVE
- DIAPHRAGM ACTUATED
- PRESSURE RELIEF
- AIR RELIEF

ACTUATORS OR OPERATORS

- (M) MOTOR (MODULATING)
- [M] MOTOR (OPEN/CLOSE, START/STOP)
- [S] SOLENOID
- [P] PNEUMATIC

INSTRUMENT ABBREVIATIONS

AL	ALARM
AC	ALTERNATING CURRENT
AI	ANALOG INPUT
AO	ANALOG OUTPUT
AM	AUTO-MANUAL
AMR	AUTO-MANUAL-REMOTE
AVG	AVERAGE
BW	BACKWASH
CA	COMMON ALARM
C	CLOSE
CCC	CENTRAL CONTROL CENTER
CL	CHLORINE
DC	DIRECT CURRENT
DI	DISCRETE INPUT
DO	DISCRETE OUTPUT
ETM	ELAPSED TIME METER
HOA	HAND-OFF-AUTO
HLO	HIGH-LOW-OFF
HL	HIGH-LOW
HLOR	HIGH-LOW-OFF-REMOTE
I/O	INPUT/OUTPUT
LL	LOCAL LEVEL
LP	LOCAL PRESSURE
LR	LOCAL-REMOTE
LOS	LOCK-OUT-STOP
LOR	LOCAL-OFF-REMOTE
LPU	LINE PROTECTION UNIT
LCP	LOCAL CONTROL PANEL
MCC	MOTOR CONTROL CENTER
MCS	MASTER CONTROL STATION
MODEM	MODULATE-DEMODULATE
OIC	OPEN-INTERMEDIATE-CLOSED
OSCA	OPEN-STOP-CLOSE-AUTO
OOR	ON-OFF-REMOTE
O	OPEN
OO	ON-OFF
OOA	ON-OFF-AUTO
ORO	OFF-RESET-ON
OC	OPEN-CLOSE
OSC	OPEN-STOP-CLOSE
OSCR	OPEN-STOP-CLOSE-REMOTE
OCA	OPEN-CLOSE-AUTO
P/A	PULSE TO ANALOG
PF	PULSE FREQUENCY
PD	PULSE DURATION
PID	PROPORTIONAL-INTEGRAL-DERIVATIVE
PLC	PROGRAMMABLE LOGIC CONTROLLER
PS	DC POWER SUPPLY
P&ID	PROCESS & INSTRUMENTATION DIAGRAM
PRV	PRESSURE RELIEF VALVE
PRPRV	PRESSURE REDUCING-PRESSURE RELIEF VALVE
RIOP	REMOTE I/O PANEL
RSP	REMOTE SET POINT
RTD	RESISTANCE TEMPERATURE DETECTOR
RTDI	RTD INPUT MODULE
RTU	REMOTE TERMINAL UNIT
SCS	SUPERVISORY CONTROL STATION
SS	START-STOP
SP	SET POINT
TSP	TWISTED SHIELDED PAIR
TST	TWISTED SHIELDED TRIAD
TURB	TURBIDITY
TPC	TIME PROPORTIONAL CONTROL
TOT	TOTALIZATION
TEMP	TEMPERATURE

INSTRUMENT IDENTIFICATION

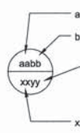

- FIELD MOUNTED INSTRUMENT
- REAR OF PANEL MOUNTED INSTRUMENT
- FRONT OF PANEL MOUNTED INSTRUMENT
- ROTAMETER
- ILLUMINATED HANDSWITCH
- PLC (PROGRAMMABLE LOGIC CONTROLLER)
- SCS (SUPERVISORY CONTROL STATION)
- INTERLOCK (I)

PUMPS & COMPRESSORS

- CENTRIFUGAL PUMP
- VERTICAL TURBINE PUMP
- METERING PUMP
- SUMP PUMP

PRIMARY ELEMENTS

- ULTRASONIC LEVEL SENSOR
- FLOW TUBE
- ANNUBAR
- PROPELLER METER
- MAGNETIC FLOW METER (M)
- V-CONE (V)
- FLOOD SWITCH

APPROVED FOR CONSTRUCTION

State of California
Department of Water Resources

REGISTERED PROFESSIONAL ENGINEER — EDUARDO YNIGUEZ — No. E17017 — Exp. 9/30/15 — ELECTRICAL — STATE OF CALIFORNIA

0 1 2 3 ORIGINAL SCALE IN INCHES FOR REDUCED PLANS

COUNTY OF SAN LUIS OBISPO – PUBLIC WORKS DEPARTMENT

INSTRUMENTATION LEGEND & SYMBOLS

SHANDON STATE WATER PROJECT TURNOUT

Designer	Date	Drawn By	Date	Design Engineer	Date
B. HALE	12/05/14	MG	12/05/14	M. ALVAREZ	12/05/14

ROAD NO.	JOB NO.	SHEET NO.	TOTAL SHEETS
	300463	14	15

SCS ◇3

PLC ◇1 ◇5

YAR 123 · YAR 125 · YAR 121 · YAR 127 · PIR 101 · YAR 113 · PIR 103 · HS 107 · YAR 107 · FIK 107 · ZIR 107 · PAHH 105 · PAHL 105 · PIR 105 · FIR 131 · YAR 131 · FQIR 131 · LAH 111 · YIR 117A · YIR 117B · YAR 117C

SP · CLOSE · CLOSE · TOT · FQY 131 · PSHH 127 · PSHL 127

DI YN 123 · DI YN 125 · DI YN 121 · DI YN 127 · AI PN 101 · DI YN 113 · AI YN 103 · DO YY 107 · DI YN 107 · AO FC 107 · AI ZN 107 · AI PN 105 · AI FN 131 · DI YN 131A · DI YN 131B · DI YN 111 · DI YN 117A · DI YN 117B · DI YN 117C

CLOSE · MANUAL · FLOW SET POINT · FAIL · PULSE · PUMP 1 RUN · PUMP 2 RUN · COMMON FAIL

A

I/I FY 131 ◇1

ZS 123 SEISMIC SENSOR · ZS 125 ◇7 CABINET INTRUSION · ZS 121 DOOR INTRUSION · ZS 127 ◇7 LOSS OF POWER

CONTROL ROOM

ZS 113 HATCH INTRUSION SWITCH

VALVE CONTROLLER ◇2

SOV-A OPEN · SOV-B CLOSE

HOSE BIBB

SUMP PUMP CONTROL PANEL

COASTAL BRANCH PIPELINE

FLOW

PIT 101 · PRV · PIT 103 · SOV-A · SOV-B · VALVE POSITION · ZT 107 · FLOW CONTROL · PIT 105 · FIT 131 M

SHANDON SYSTEM

LSH 115 · LSL 115 · M · M

LSH 111 FLOOD SWITCH

SUMP PUMP

METER VAULT

NOTES:

1. LOCATED IN RPP.
2. NON-BATTERY BACKUP POWERED.
3. EXISTING, TO BE MODIFIED BY OWNER.
4. SOLENOID
5. PROVIDED BY CONTRACTOR. PROGRAMMED BY OWNER.

APPROVED FOR CONSTRUCTION

State of California
Department of Water Resources

REGISTERED PROFESSIONAL ENGINEER · EDUARDO YANEZ · No. E17077 · Exp. 9/30/15 · ELECTRICAL · STATE OF CALIFORNIA

0 1 2 3 ORIGINAL SCALE IN INCHES FOR REDUCED PLANS

COUNTY OF SAN LUIS OBISPO – PUBLIC WORKS DEPARTMENT

SHANDON METER STATION P&ID

SHANDON STATE WATER PROJECT TURNOUT

Designer	Date	Drawn By	Date	Design Engineer	Date
B. HALE	12/05/14	MG	12/05/14	M. ALVAREZ	12/05/14

ROAD NO.	JOB NO.	SHEET NO.	TOTAL SHEETS
	300463	15	15

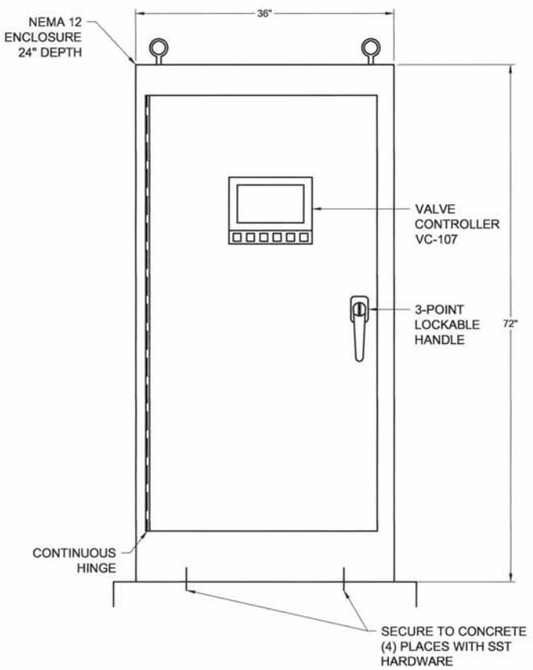

1 REMOTE PROCESS PANEL (RPP)
SCALE: NTS

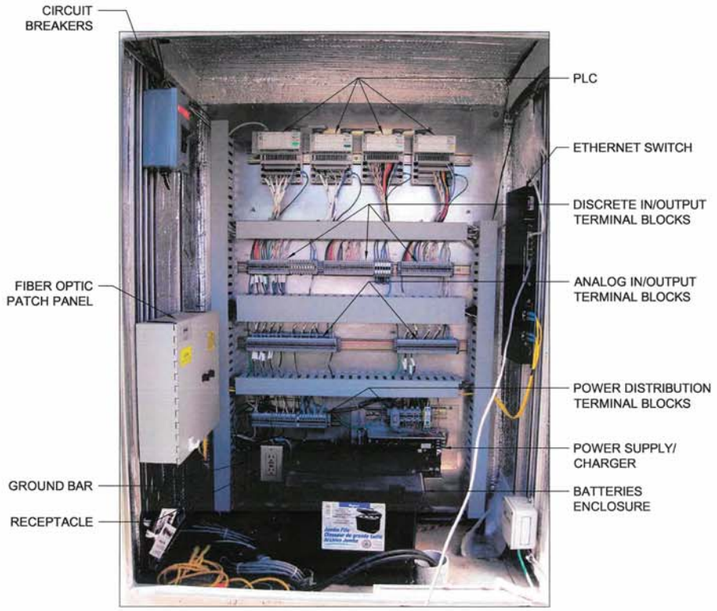

2 SAMPLE RPP INTERIOR LAYOUT
SCALE: NTS

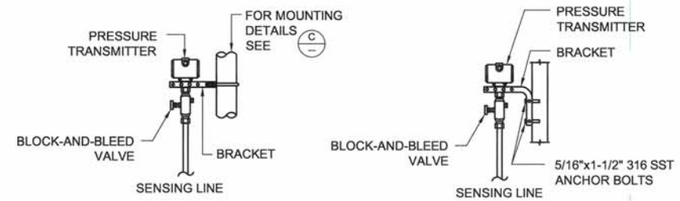

PIPE MOUNTING BRACKET A

WALL MOUNTING BRACKET B

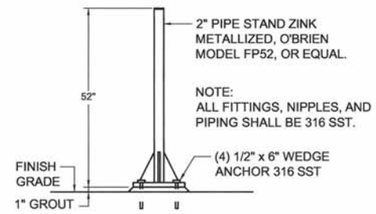

INSTRUMENT PIPE STAND MOUNTING C

3 PRESSURE TRANSMITTER MOUNTING
SCALE: NTS

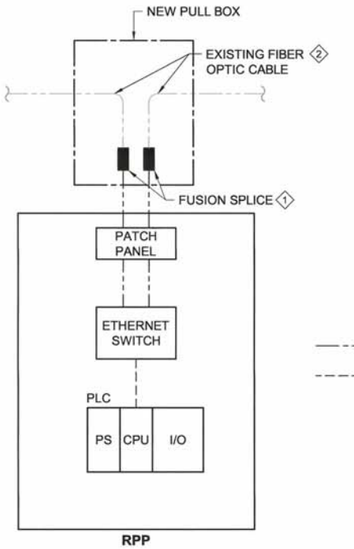

LEGEND

FIBER OPTIC CABLE

ETHERNET COPPER CABLE

NOTES:

1 TO BE INSTALLED BY OWNER.

2 CUT CONDUIT AND CABLE. PROVIDE PULL BOX. PROVIDE NEW CONDUIT CONNECTIONS.

4 COMMUNICATIONS BLOCK DIAGRAM
SHT 3, SHT 11
SCALE: NTS

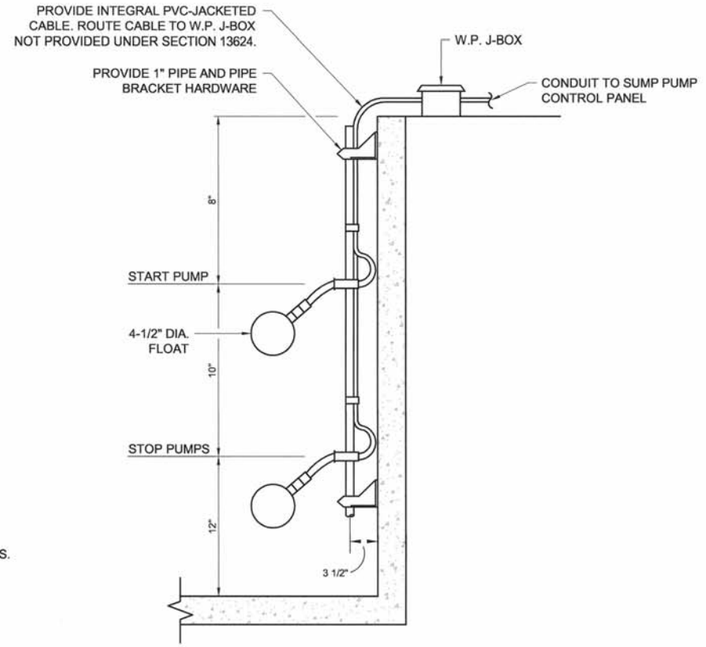

5 FLOAT SWITCH
SCALE: NTS

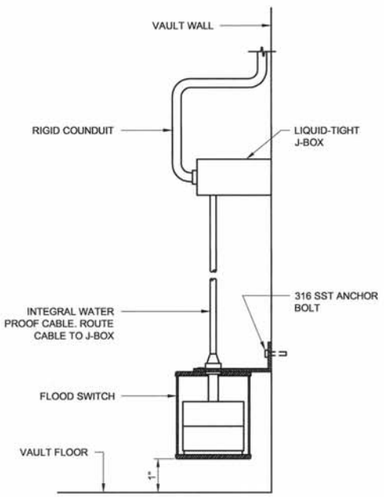

6 FLOOD SWITCH
SCALE: NTS

APPROVED FOR CONSTRUCTION

State of California
Department of Water Resources

REGISTERED PROFESSIONAL ENGINEER
GERARDO YNIGUEZ
No. E17017
Exp. 9/30/15
ELECTRICAL
STATE OF CALIFORNIA

COUNTY OF SAN LUIS OBISPO – PUBLIC WORKS DEPARTMENT

INSTRUMENTATION DETAILS

SHANDON STATE WATER PROJECT TURNOUT

Designer	Date	Drawn By	Date	Design Engineer	Date
B. HALE	12/05/14	MG	12/05/14	M. ALVAREZ	12/05/14

0 1 2 3
ORIGINAL SCALE IN INCHES FOR REDUCED PLANS