SAN LUIS OBISPO COUNTY
DEPARTMENT OF PUBLIC WORKS
Wade Horton, Director
County Government Center, Room 206 • San Luis Obispo CA 93408 • (805) 781-5252
Fax (805) 781-1229 email address: pwd@co.slo.ca.us

July 10, 2015

FAX AND EMAIL &
ATTACH TO CONTRACT

ADDENDUM NO. 1 TO
RIVER ROAD WIDENING PROJECT
SAN MIGUEL, CA
CONTRACT NO. 300489
FEDERAL AID PROJECT NO.: HSIPL-5949(149)

The final day, time and location for submittal of bid proposal remain unchanged:
Date / Time: Thursday July 16, 2015 at 3:00 p.m.

At: Office of the County Clerk
1055 Monterey Street, Room D-120
San Luis Obispo, California 93408

Certain revisions are hereby incorporated into the Contract Documents for the subject project. These revisions are as follows:

The section titled "BID PROPOSAL AND FORMS" is hereby amended as follows:

1) Replace the second page of the BID PROPOSAL on page FED-10(b) with attached hereon. The following changes were made to the Bid Sheet:
    a. The approximate quantity was updated for Bid Item No. 30 "18" HDPE PIPE".
    b. A new bid item was added, Bid Item No. 31 "18" CMP DOWNDRAIN (0.079").
    c. Bid item numbers were changed starting with bid item No. 32 to account for the new bid item No. 31.

The section titled "SECTION 6. FEDERAL MINIMUM WAGES" is hereby amended as follows:

2) Replace the Federal Minimum Wages per the per the June 19, 2015 wage rates (attached).

The section titled "SECTION 10. CONSTRUCTION DETAILS" is hereby amended as follows:

3) Replace entire Section 10-1.11 on Page 10-38 with the following specification;

    "REMOVE TRAFFIC STRIPE, MARKERS AND DELINEATORS

    Remove painted traffic stripe, markers, and delineators within the project limits, as directed by the Engineer and in conformance with the plans, the provisions in Section 15, "Existing

Highway Facilities," of the Standard Specifications, the provisions under "Traffic Control System" of these Special Provisions, and these Special Provisions.

Attention is directed to "Construction Site Management" of these Special Provisions.

Waste residue from removal of painted traffic stripe and pavement marking is a non-hazardous waste residue and contains lead in average concentrations less than 1000 mg/kg total lead and 5 mg/L soluble lead. This waste residue does not contain heavy metals in concentrations that exceed thresholds established by the Health and Safety Code and 22 CA Code of Regs and is not regulated under the Federal Resource Conservation and Recovery Act (RCRA), 42 USC 6901 et seq.

Full compensation for furnishing all labor, materials, tools, equipment and incidentals, and for doing all the work involved in removing painted striping, markers, and delineators, cleaning residue, and disposing of removed material, as shown on the plans, as specified in the Standard Specifications and these Special Provisions, and as directed by the Engineer shall be considered as included in the various contract items of work involved and no additional compensation will be allowed therefore.

Nothing in these Special Provisions shall relieve the Contractor of the Contractor's responsibilities as specified in Section 7-1.09, "Public Safety," of the Standard Specifications."

4) In Section 10-1.27 on Page 10-49 replace the third paragraph with the following;

   "The aggregate for HMA Type A shall comply with the 1/2-inch maximum grading."

5) In Section 10-1.27 on Page 10-51 under "Leveling Course" add the following paragraph;

   "The aggregate for leveling courses shall comply with the 1/2-inch maximum grading."

6) In Section 10-1.27 on Page 10-51 under "Hot Mix Asphalt Overlay" add the following paragraph;

   "The aggregate for overlay courses shall comply with the 1/2-inch maximum grading."

7) Under Section 10-1.31 on Page 10-55 add the following paragraph;

   "The aggregate used for miscellaneous areas shall comply with the 1/2-inch maximum grading."

8) Under Section 10-1.31 on Page 10-55 add the following paragraph;

   "The aggregate used for miscellaneous areas shall comply with the 1/2-inch maximum grading."

9) Replace the first paragraph under Section 10-1.35 on Page 10-58 with the following;

   "This work includes installing 18" and 24" CMP (0.079") down drains in accordance with State Standard Plans D87 series."

10) Replace the third paragraph under Section 10-1.35 on Page 10-58 with the following;

"The contract price paid per linear foot for "18" CMP DOWNDRAIN (0.079)" and "24" CMP DOWNDRAIN (0.079)," shall include full compensation for furnishing all labor, materials, tools, equipment, and incidentals and for doing all the work involved in installing the down drains, complete in place, including elbows, couplings, anchorages, connections, associated trenching, excavations, as shown on the Plans, the Standard Specifications and these Special Provisions, and as directed by the Engineer."

The section titled "STANDARD PLANS" is hereby amended as follows:

11) Add the Typical Mail Box Standard Detail (attached) to the "Standard Plans"

The section titled "PLANS" is hereby amended as follows:

12) Add the following note to the proposed structural section call-out on each Typical Section shown on Sheet 3 of 12;

"12-inch Subgrade, 95% Relative Compaction"

13) Replace the first note under "STRIPING NOTES" on Sheet 8 of 12 with the following note;

"Remove existing painted striping (Detail 21) within the project limits per Section 15 "Miscellaneous Highway Facilities" of the State Standard Specifications"

All bidders shall acknowledge acceptance of this correction notice. **PLEASE FAX TO US, TODAY, A SIGNED COPY OF THIS SHEET INDICATING CONFIRMATION OF RECEIPT OF THIS ADDENDUM (FAX (805) 781-1229).** If you are unable to read the fax, please call Jeff Werst in the Public Works Department at (805) 781-5252.

DF

WADE HORTON
Director of Public Works

Attachments: Bid Proposal FED-10(b)
Federal Wage Rates
Typical Mail Box Standard Detail

File: Contract No. 300489

ACKNOWLEDGMENT

Company Name	Printed Name	Signature	Date

L:\DESIGN\JUL15\300489 Addendum No. 1.docx.jwerst.taw

20	390130	HOT MIX ASPHALT (TYPE A) OVERLAY	910	TON		
21	390132	HOT MIX ASPHALT (TYPE A)	410	TON		
22	390135	HOT MIX ASPHALT (TYPE A) LEVELING COURSE	110	TON		
23	394050	RUMBLE STRIP (CENTERLINE)	2909	LF		
24	394073	PLACE HOT MIX ASPHALT DIKE (TYPE A)	1364	LF		
25	394074	PLACE HOT MIX ASPHALT DIKE (TYPE C)	230	LF		
26	394074	PLACE HOT MIX ASPHALT DIKE (TYPE F)	379	LF		
27	394090	PLACE HOT MIX ASPHALT (MISCELLANEOUS AREAS)	870	SY		
28	490523	FURNISH AND INSTALL STEEL SHEET PILING	1600	SF		
29	566011	ROADSIDE SIGN (1-POST)	11	EA		
30	641102	18" HDPE PIPE	322	LF		
31	690106	18" CMP DOWNDRAIN (0.079")	30	LF		
32	690117	24" CMP DOWNDRAIN (0.079")	30	LF		
33	707050	DRAINAGE INLET	3	EA		
34	707052	36" CMP RISER	2	EA		
35	721009	ROCK SLOPE PROTECTION (FACING CLASS, METHOD B)	3	CY		
36	721009	ROCK SLOPE PROTECTION (1/4 TON)	5	CY		
37	810110	SURVEY MONUMENT AND WELL	5	EA		
38	820118	GUARD RAILING DELINEATOR (TYPE F-1)	24	EA		
39	820130	MARKERS (TYPE L-1)	3	EA		
40	832003	METAL BEAM GUARD RAIL (WOOD POST)	953	LF		
41	839521	CABLE RAILING	60	LF		
42	839565	TERMINAL SYSTEM (TYPE SRT)	5	EA		
43	840656	PAINT TRAFFIC STRIPE (2-COAT)	11055	LF		
44	850111	PAVEMENT MARKER (RETROREFLECTIVE)	242	EA		
					TOTAL BID	

Bidder's Name: _____

General Decision Number: CA150019 06/19/2015 CA19

Superseded General Decision Number: CA20140019

State: California

Construction Types: Building, Heavy (Heavy and Dredging) and Highway

County: San Luis Obispo County in California.

BUILDING, DREDGING (does not include hopper dredge work), HEAVY (does not include water well drilling, AND HIGHWAY CONSTRUCTION PROJECTS

Note: Executive Order (EO) 13658 establishes an hourly minimum wage of $10.10 for 2015 that applies to all contracts subject to the Davis-Bacon Act for which the solicitation is issued on or after January 1, 2015. If this contract is covered by the EO, the contractor must pay all workers in any classification listed on this wage determination at least $10.10 (or the applicable wage rate listed on this wage determination, if it is higher) for all hours spent performing on the contract. The EO minimum wage rate will be adjusted annually. Additional information on contractor requirements and worker protections under the EO is available at www.dol.gov/whd/govcontracts.

Modification Number	Publication Date
0	01/02/2015
1	01/16/2015
2	02/06/2015
3	02/20/2015
4	03/27/2015
5	05/08/2015
6	06/19/2015

ASBE0005-002 06/30/2014

	Rates	Fringes
Asbestos Workers/Insulator (Includes the application of all insulating materials, protective coverings, coatings, and finishes to all types of mechanical systems)	$ 35.44	19.36
Fire Stop Technician (Application of Firestopping Materials for wall openings and penetrations in walls, floors, ceilings and curtain walls)	$ 24.34	16.09

ASBE0005-004 06/24/2013

	Rates	Fringes

Asbestos Removal
worker/hazardous material
handler (Includes
preparation, wetting,
stripping, removal,
scrapping, vacuuming, bagging
and disposing of all
insulation materials from
mechanical systems, whether
they contain asbestos or not)....$ 16.95 10.23

BOIL0092-004 10/01/2012

Area within a 25 mile radius of City of Santa Maria

	Rates	Fringes
BOILERMAKER.....	$ 41.17	28.27

BOIL0549-007 01/01/2013

Remainder of County outside a 25 mile radius of City of Santa Maria

	Rates	Fringes
BOILERMAKER.....	$ 38.37	31.32

---

* BRCA0004-006 05/01/2015

	Rates	Fringes
BRICKLAYER; MARBLE SETTER.....	$ 36.26	13.70

*The wage scale for prevailing wage projects performed in Blythe, China lake, Death Valley, Fort Irwin, Twenty-Nine Palms, Needles and 1-15 corridor (Barstow to the Nevada State Line) will be Three Dollars ($3.00) above the standard San Bernardino/Riverside County hourly wage rate

---

BRCA0018-008 06/01/2014

	Rates	Fringes
MARBLE FINISHER.....	$ 28.45	11.38
TILE FINISHER.....	$ 23.78	9.84

BRCA0018-011 06/01/2014

	Rates	Fringes
TILE LAYER.....	$ 35.14	14.33

CARP0409-001 07/01/2010

	Rates	Fringes
CARPENTER		

```
     (1) Carpenter, Cabinet
     Installer, Insulation
     Installer, Hardwood Floor
     Worker and acoustical
     installer...................$ 37.35            11.08
     (2) Millwright..............$ 37.85            11.08
     (3) Piledrivermen/Derrick
     Bargeman, Bridge or Dock
     Carpenter, Heavy Framer,
     Rock Bargeman or Scowman,
     Rockslinger, Shingler
     (Commercial)................$ 37.48            11.08
     (4) Pneumatic Nailer,
     Power Stapler...............$ 37.60            11.08
     (5)  Sawfiler...............$ 37.44            11.08
     (6)  Scaffold Builder.......$ 28.55            11.08
     (7)  Table Power Saw
     Operator....................$ 37.45            11.08

  FOOTNOTE: Work of forming in the construction of open cut
  sewers or storm drains, on operations in which horizontal
  lagging is used in conjunction with steel H-Beams driven or
  placed in pre- drilled holes, for that portion of a lagged
  trench against which concrete is poured, namely, as a
  substitute for back forms (which work is performed by
  piledrivers): $0.13 per hour additional.

-----------------------------------------------------------------
 CARP0409-005 07/01/2010

                                   Rates          Fringes

Drywall
     DRYWALL INSTALLER/LATHER....$ 37.35            11.08
     STOCKER/SCRAPPER............$ 10.00             6.67
-----------------------------------------------------------------
 CARP0409-008 08/01/2010

                                   Rates          Fringes

Modular Furniture Installer......$ 17.00             7.41
-----------------------------------------------------------------
 ELEC0639-001 01/01/2015

                                   Rates          Fringes

Electricians
     Wireman/Technician..........$ 39.30            18.66

FOOTNOTES:

  CABLE SPLICER: 10% additional per hour above
  Wireman/Technician basic hourly rate.

  Work from trusses, swinging scaffolds, open ladders,
  scaffolds, bosun chairs, stacks or towers, where subject to
  a direct fall from the ground floor or support structure
  from a distance of fifty (50) feet to ninety (90) feet: to
  be paid time and one-half.   Work from trusses, swinging
  scaffolds, open ladders, scaffolds, bosun chairs, stacks or
```

towers, where subject to a direct fall from the ground floor or support structure from a distance over ninety (90) feet: to be paid double the regular straight time rate of pay. Where workers are required to work under compressed air or in areas where injurious gases, dust or fumes are present in amounts necessitating the use of gas masks or self-contained breathing apparatus (particle masks are not considered self-contained breathing apparatus) or where workers work on poles at a distance of seventy-five (75) feet or more from the ground: to be paid a bonus of straight time pay. This shall be at a minimum of one hour, and thereafter, each succeeding hour or fraction thereof shall constitute an hour at the bonus rate. Tunnel work: to be paid at the time and one-quarter hourly rate.

All employers may request workmen to report direct to a job within a free zone to include everything west of ten (10) miles east of Highway 101, as the crow flies, and then (10) miles north and south of Highway 46, as the crow flies, to the junction of Highway 41 and Highway 46. Everything outside this area shall be paid at full subsistence provide said job is of five (5) days duration or more and provide there is storage on the job for the Employee's tools. The Employer will be responsible for loss of tools under such circumstances. (Road: The most direct route on a surfaced road).

On all jobs or projects outside the free zone, as stated above, Employees may be required to report to the job site in their own transportation at the regular starting time and remain on the job site until the regular quitting time and these shall be paid at fifty dollars ($50.00) per day or fifty-one cents ($0.51) per mile for each road mile from shop to job and job to shop (round trip). (Day worked shall mean at least four (4) hours on the job unless sent home on account of weather, emergency, sickness, or injury).

The Employer shall pay for traveling time and furnish transportation from shop to job, job to job, and job to shop. Travel time shall be at the appropriate rate of pay for that day of the week. (Monday through Friday, straight time, Saturday and Sunday, double time.)

ELEC0639-003 05/26/2014

COMMUNICATIONS AND SYSTEMS WORK

SAN LUIS OBISPO COUNTY

	Rates	Fringes
Communications System		
Installer	$ 29.09	11.60
Technician	$ 30.89	11.66

SCOPE OF WORK: Installation, testing, service and maintenance of systems utilizing the transmission and/or transference of voice, sound, vision and digital for commercial, educational, security and entertainment purposes for the

following: TV monitoring and surveillance, background - foreground music, intercom and telephone interconnect, microwave transmission, multi-media, multiplex, nurse call systems, radio page, burglar alarms and fire alarm (see last paragraph below).

Communication Systems that transmit or receive information and/or control systems that are intrinsic to the above listed systems; inclusion or exclusion of terminations and testings of conductors determined by their function; excluding all other data systems or multiple systems which include control function or power supply; excluding installation of raceway systems, conduit systems, line voltage work, and energy management systems.

Fire alarm work shall be performed at the current inside electrician total cost package.

---

* ELEC1245-001 01/01/2015

	Rates	Fringes
LINE CONSTRUCTION		
(1) Lineman; Cable splicer..	$ 51.81	15.00
(2) Equipment specialist (operates crawler tractors, commercial motor vehicles, backhoes, trenchers, cranes (50 tons and below), overhead & underground distribution line equipment).....	$ 41.38	13.85
(3) Groundman.....	$ 31.65	13.51
(4) Powderman.....	$ 46.26	14.06

HOLIDAYS: New Year's Day, M.L. King Day, Memorial Day, Independence Day, Labor Day, Veterans Day, Thanksgiving Day and day after Thanksgiving, Christmas Day

---

ELEV0008-003 01/01/2015

	Rates	Fringes
ELEVATOR MECHANIC.....	$ 60.39	28.38

FOOTNOTE:
PAID VACATION: Employer contributes 8% of regular hourly rate as vacation pay credit for employees with more than 5 years of service, and 6% for 6 months to 5 years of service.
PAID HOLIDAYS: New Years Day, Memorial Day, Independence Day, Labor Day, Veterans Day, Thanksgiving Day, Friday after Thanksgiving, and Christmas Day.

ENGI0012-003 07/07/2014

	Rates	Fringes

OPERATOR: Power Equipment
(All Other Work)

GROUP 1	$ 39.05	22.25
GROUP 2	$ 39.83	22.25
GROUP 3	$ 40.12	22.25
GROUP 4	$ 41.61	22.25
GROUP 5	$ 41.86	22.25
GROUP 6	$ 41.83	22.25
GROUP 8	$ 41.94	22.25
GROUP 9	$ 42.19	22.25
GROUP 10	$ 42.06	22.25
GROUP 11	$ 42.31	22.25
GROUP 12	$ 42.23	22.25
GROUP 13	$ 42.33	22.25
GROUP 14	$ 42.36	22.25
GROUP 15	$ 42.44	22.25
GROUP 16	$ 42.56	22.25
GROUP 17	$ 42.73	22.25
GROUP 18	$ 42.83	22.25
GROUP 19	$ 42.94	22.25
GROUP 20	$ 43.06	22.25
GROUP 21	$ 43.23	22.25
GROUP 22	$ 43.33	22.25
GROUP 23	$ 43.44	22.25
GROUP 24	$ 43.56	22.25
GROUP 25	$ 43.73	22.25

OPERATOR: Power Equipment
(Cranes, Piledriving &
Hoisting)

GROUP 1	$ 40.40	22.25
GROUP 2	$ 41.18	22.25
GROUP 3	$ 41.47	22.25
GROUP 4	$ 41.61	22.25
GROUP 5	$ 41.83	22.25
GROUP 6	$ 41.94	22.25
GROUP 7	$ 42.06	22.25
GROUP 8	$ 42.23	22.25
GROUP 9	$ 42.40	22.25
GROUP 10	$ 43.40	22.25
GROUP 11	$ 44.40	22.25
GROUP 12	$ 45.40	22.25
GROUP 13	$ 46.40	22.25

OPERATOR: Power Equipment
(Tunnel Work)

GROUP 1	$ 40.90	22.25
GROUP 2	$ 41.68	22.25
GROUP 3	$ 41.97	22.25
GROUP 4	$ 42.11	22.25
GROUP 5	$ 42.33	22.25
GROUP 6	$ 42.44	22.25
GROUP 7	$ 42.56	22.25

PREMIUM PAY:
$3.75 per hour shall be paid on all Power Equipment Operator work on the followng Military Bases: China Lake Naval Reserve, Vandenberg AFB, Point Arguello, Seely Naval Base, Fort Irwin, Nebo Annex Marine Base, Marine Corp Logistics Base Yermo, Edwards AFB, 29 Palms Marine Base and Camp Pendleton

Workers required to suit up and work in a hazardous material environment: $2.00 per hour additional. Combination mixer and compressor operator on gunite work shall be classified as a concrete mobile mixer operator.

SEE ZONE DEFINITIONS AFTER CLASSIFICATIONS

POWER EQUIPMENT OPERATORS CLASSIFICATIONS

GROUP 1: Bargeman; Brakeman; Compressor operator; Ditch Witch, with seat or similar type equipment; Elevator operator-inside; Engineer Oiler; Forklift operator (includes loed, lull or similar types under 5 tons; Generator operator; Generator, pump or compressor plant operator; Pump operator; Signalman; Switchman

GROUP 2: Asphalt-rubber plant operator (nurse tank operator); Concrete mixer operator-skip type; Conveyor operator; Fireman; Forklift operator (includes loed, lull or similar types over 5 tons; Hydrostatic pump operator; oiler crusher (asphalt or concrete plant); Petromat laydown machine; PJU side dum jack; Screening and conveyor machine operator (or similar types); Skiploader (wheel type up to 3/4 yd. without attachment); Tar pot fireman; Temporary heating plant operator; Trenching machine oiler

GROUP 3: Asphalt-rubber blend operator; Bobcat or similar type (Skid steer); Equipment greaser (rack); Ford Ferguson (with dragtype attachments); Helicopter radioman (ground); Stationary pipe wrapping and cleaning machine operator

GROUP 4: Asphalt plant fireman; Backhoe operator (mini-max or similar type); Boring machine operator; Boxman or mixerman (asphalt or concrete); Chip spreading machine operator; Concrete cleaning decontamination machine operator; Concrete Pump Operator (small portable); Drilling machine operator, small auger types (Texoma super economatic or similar types - Hughes 100 or 200 or similar types - drilling depth of 30' maximum); Equipment greaser (grease truck); Guard rail post driver operator; Highline cableway signalman; Hydra-hammer-aero stomper; Micro Tunneling (above ground tunnel); Power concrete curing machine operator; Power concrete saw operator; Power-driven jumbo form setter operator; Power sweeper operator; Rock Wheel Saw/Trencher; Roller operator (compacting); Screed operator (asphalt or concrete); Trenching machine operator (up to 6 ft.); Vacuum or much truck

GROUP 5: Equipment Greaser (Grease Truck/Multi Shift).

GROUP 6: Articulating material hauler; Asphalt plant engineer; Batch plant operator; Bit sharpener; Concrete joint machine operator (canal and similar type); Concrete planer operator; Dandy digger; Deck engine operator; Derrickman (oilfield type); Drilling machine operator, bucket or auger types (Calweld 100 bucket or similar types - Watson 1000 auger or similar types - Texoma 330, 500 or 600 auger or similar types - drilling depth of 45' maximum); Drilling machine operator; Hydrographic seeder machine operator (straw, pulp or seed), Jackson track

maintainer, or similar type; Kalamazoo Switch tamper, or similar type; Machine tool operator; Maginnis internal full slab vibrator, Mechanical berm, curb or gutter(concrete or asphalt); Mechanical finisher operator (concrete, Clary-Johnson-Bidwell or similar); Micro tunnel system (below ground); Pavement breaker operator (truck mounted); Road oil mixing machine operator; Roller operator (asphalt or finish), rubber-tired earth moving equipment (single engine, up to and including 25 yds. struck); Self-propelled tar pipelining machine operator; Skiploader operator (crawler and wheel type, over 3/4 yd. and up to and including 1-1/2 yds.); Slip form pump operator (power driven hydraulic lifting device for concrete forms); Tractor operator-bulldozer, tamper-scraper (single engine, up to 100 h.p. flywheel and similar types, up to and including D-5 and similar types); Tugger hoist operator (1 drum); Ultra high pressure waterjet cutting tool system operator; Vacuum blasting machine operator

GROUP 8: Asphalt or concrete spreading operator (tamping or finishing); Asphalt paving machine operator (Barber Greene or similar type); Asphalt-rubber distribution operator; Backhoe operator (up to and including 3/4 yd.), small ford, Case or similar; Cast-in-place pipe laying machine operator; Combination mixer and compressor operator (gunite work); Compactor operator (self-propelled); Concrete mixer operator (paving); Crushing plant operator; Drill Doctor; Drilling machine operator, Bucket or auger types (Calweld 150 bucket or similar types - Watson 1500, 2000 2500 auger or similar types - Texoma 700, 800 auger or similar types - drilling depth of 60' maximum); Elevating grader operator; Grade checker; Gradall operator; Grouting machine operator; Heavy-duty repairman; Heavy equipment robotics operator; Kalamazoo balliste regulator or similar type; Kolman belt loader and similar type; Le Tourneau blob compactor or similar type; Loader operator (Athey, Euclid, Sierra and similar types); Mobark Chipper or similar; Ozzie padder or similar types; P.C. slot saw; Pneumatic concrete placing machine operator (Hackley-Presswell or similar type); Pumpcrete gun operator; Rock Drill or similar types; Rotary drill operator (excluding caisson type); Rubber-tired earth-moving equipment operator (single engine, caterpillar, Euclid, Athey Wagon and similar types with any and all attachments over 25 yds. up to and including 50 cu. yds. struck); Rubber-tired earth-moving equipment operator (multiple engine up to and including 25 yds. struck); Rubber-tired scraper operator (self-loading paddle wheel type-John Deere, 1040 and similar single unit); Self-propelled curb and gutter machine operator; Shuttle buggy; Skiploader operator (crawler and wheel type over 1-1/2 yds. up to and including 6-1/2 yds.); Soil remediation plant operator; Surface heaters and planer operator; Tractor compressor drill combination operator; Tractor operator (any type larger than D-5 - 100 flywheel h.p. and over, or similar-bulldozer, tamper, scraper and push tractor single engine); Tractor operator (boom attachments), Traveling pipe wrapping, cleaning and bendng machine operator; Trenching machine operator (over 6 ft. depth capacity, manufacturer's rating); trenching Machine with Road Miner attachment (over 6 ft depth capacity): Ultra high pressure

waterjet cutting tool system mechanic; Water pull (compaction) operator

GROUP 9: Heavy Duty Repairman

GROUP 10: Drilling machine operator, Bucket or auger types (Calweld 200 B bucket or similar types-Watson 3000 or 5000 auger or similar types-Texoma 900 auger or similar types-drilling depth of 105' maximum); Dual drum mixer, dynamic compactor LDC350 (or similar types); Monorail locomotive operator (diesel, gas or electric); Motor patrol-blade operator (single engine); Multiple engine tractor operator (Euclid and similar type-except Quad 9 cat.); Rubber-tired earth-moving equipment operator (single engine, over 50 yds. struck); Pneumatic pipe ramming tool and similar types; Prestressed wrapping machine operator; Rubber-tired earth-moving equipment operator (single engine, over 50 yds. struck); Rubber tired earth moving equipment operator (multiple engine, Euclid, caterpillar and similar over 25 yds. and up to 50 yds. struck), Tower crane repairman; Tractor loader operator (crawler and wheel type over 6-1/2 yds.); Woods mixer operator (and similar Pugmill equipment)

GROUP 11: Heavy Duty Repairman - Welder Combination, Welder - Certified.

GROUP 12: Auto grader operator; Automatic slip form operator; Drilling machine operator, bucket or auger types (Calweld, auger 200 CA or similar types - Watson, auger 6000 or similar types - Hughes Super Duty, auger 200 or similar types - drilling depth of 175' maximum); Hoe ram or similar with compressor; Mass excavator operator less tha 750 cu. yards; Mechanical finishing machine operator; Mobile form traveler operator; Motor patrol operator (multi-engine); Pipe mobile machine operator; Rubber-tired earth- moving equipment operator (multiple engine, Euclid, Caterpillar and similar type, over 50 cu. yds. struck); Rubber-tired self- loading scraper operator (paddle-wheel-auger type self-loading - two (2) or more units)

GROUP 13: Rubber-tired earth-moving equipment operator operating equipment with push-pull system (single engine, up to and including 25 yds. struck)

GROUP 14: Canal liner operator; Canal trimmer operator; Remote- control earth-moving equipment operator (operating a second piece of equipment: $1.00 per hour additional); Wheel excavator operator (over 750 cu. yds.)

GROUP 15: Rubber-tired earth-moving equipment operator, operating equipment with push-pull system (single engine, Caterpillar, Euclid, Athey Wagon and similar types with any and all attachments over 25 yds. and up to and including 50 yds. struck); Rubber-tired earth-moving equipment operator, operating equipment with push-pull system (multiple engine-up to and including 25 yds. struck)

GROUP 16: Rubber-tired earth-moving equipment operator, operating equipment with push-pull system (single engine,

over 50 yds. struck); Rubber-tired earth-moving equipment operator, operating equipment with push-pull system (multiple engine, Euclid, Caterpillar and similar, over 25 yds. and up to 50 yds. struck)

GROUP 17: Rubber-tired earth-moving equipment operator, operating equipment with push-pull system (multiple engine, Euclid, Caterpillar and similar, over 50 cu. yds. struck); Tandem tractor operator (operating crawler type tractors in tandem - Quad 9 and similar type)

GROUP 18: Rubber-tired earth-moving equipment operator, operating in tandem (scrapers, belly dumps and similar types in any combination, excluding compaction units - single engine, up to and including 25 yds. struck)

GROUP 19: Rotex concrete belt operator (or similar types); Rubber-tired earth-moving equipment operator, operating in tandem (scrapers, belly dumps and similar types in any combination, excluding compaction units - single engine, Caterpillar, Euclid, Athey Wagon and similar types with any and all attachments over 25 yds.and up to and including 50 cu. yds. struck); Rubber-tired earth-moving equipment operator, operating in tandem (scrapers, belly dumps and similar types in any combination, excluding compaction units - multiple engine, up to and including 25 yds. struck)

GROUP 20: Rubber-tired earth-moving equipment operator, operating in tandem (scrapers, belly dumps and similar types in any combination, excluding compaction units - single engine, over 50 yds. struck); Rubber-tired earth-moving equipment operator, operating in tandem (scrapers, belly dumps, and similar types in any combination, excluding compaction units - multiple engine, Euclid, Caterpillar and similar, over 25 yds. and up to 50 yds. struck)

GROUP 21: Rubber-tired earth-moving equipment operator, operating in tandem (scrapers, belly dumps and similar types in any combination, excluding compaction units - multiple engine, Euclid, Caterpillar and similar type, over 50 cu. yds. struck)

GROUP 22: Rubber-tired earth-moving equipment operator, operating equipment with the tandem push-pull system (single engine, up to and including 25 yds. struck)

GROUP 23: Rubber-tired earth-moving equipment operator, operating equipment with the tandem push-pull system (single engine, Caterpillar, Euclid, Athey Wagon and similar types with any and all attachments over 25 yds. and up to and including 50 yds. struck); Rubber-tired earth-moving equipment operator, operating with the tandem push-pull system (multiple engine, up to and including 25 yds. struck)

GROUP 24: Rubber-tired earth-moving equipment operator, operating equipment with the tandem push-pull system (single engine, over 50 yds. struck); Rubber-tired earth-moving equipment operator, operating equipment with

the tandem push-pull system (multiple engine, Euclid, Caterpillar and similar, over 25 yds. and up to 50 yds. struck)

GROUP 25: Concrete pump operator-truck mounted; Rubber-tired earth-moving equipment operator, operating equipment with the tandem push-pull system (multiple engine, Euclid, Caterpillar and similar type, over 50 cu. yds. struck)

CRANES, PILEDRIVING AND HOISTING EQUIPMENT CLASSIFICATIONS

GROUP 1: Engineer oiler; Fork lift operator (includes loed, lull or similar types)

GROUP 2: Truck crane oiler

GROUP 3: A-frame or winch truck operator; Ross carrier operator (jobsite)

GROUP 4: Bridge-type unloader and turntable operator; Helicopter hoist operator

GROUP 5: Hydraulic boom truck; Stinger crane (Austin-Western or similar type); Tugger hoist operator (1 drum)

GROUP 6: Bridge crane operator; Cretor crane operator; Hoist operator (Chicago boom and similar type); Lift mobile operator; Lift slab machine operator (Vagtborg and similar types); Material hoist and/or manlift operator; Polar gantry crane operator; Self Climbing scaffold (or similar type); Shovel, backhoe, dragline, clamshell operator (over 3/4 yd. and up to 5 cu. yds. mrc); Tugger hoist operator

GROUP 7: Pedestal crane operator; Shovel, backhoe, dragline, clamshell operator (over 5 cu. yds. mrc); Tower crane repair; Tugger hoist operator (3 drum)

GROUP 8: Crane operator (up to and including 25 ton capacity); Crawler transporter operator; Derrick barge operator (up to and including 25 ton capacity); Hoist operator, stiff legs, Guy derrick or similar type (up to and including 25 ton capacity); Shovel, backhoe, dragline, clamshell operator (over 7 cu. yds., M.R.C.)

GROUP 9: Crane operator (over 25 tons and up to and including 50 tons mrc); Derrick barge operator (over 25 tons up to and including 50 tons mrc); Highline cableway operator; Hoist operator, stiff legs, Guy derrick or similar type (over 25 tons up to and including 50 tons mrc); K-crane operator; Polar crane operator; Self erecting tower crane operator maximum lifting capacity ten tons

GROUP 10: Crane operator (over 50 tons and up to and including 100 tons mrc); Derrick barge operator (over 50 tons up to and including 100 tons mrc); Hoist operator, stiff legs, Guy derrick or similar type (over 50 tons up to and including 100 tons mrc), Mobile tower crane operator (over 50 tons, up to and including 100 tons M.R.C.); Tower crane operator and tower gantry

GROUP 11: Crane operator (over 100 tons and up to and including 200 tons mrc); Derrick barge operator (over 100 tons up to and including 200 tons mrc); Hoist operator, stiff legs, Guy derrick or similar type (over 100 tons up to and including 200 tons mrc); Mobile tower crane operator (over 100 tons up to and including 200 tons mrc)

GROUP 12: Crane operator (over 200 tons up to and including 300 tons mrc); Derrick barge operator (over 200 tons up to and including 300 tons mrc); Hoist operator, stiff legs, Guy derrick or similar type (over 200 tons, up to and including 300 tons mrc); Mobile tower crane operator (over 200 tons, up to and including 300 tons mrc)

GROUP 13: Crane operator (over 300 tons); Derrick barge operator (over 300 tons); Helicopter pilot; Hoist operator, stiff legs, Guy derrick or similar type (over 300 tons); Mobile tower crane operator (over 300 tons)

TUNNEL CLASSIFICATIONS

GROUP 1: Skiploader (wheel type up to 3/4 yd. without attachment)

GROUP 2: Power-driven jumbo form setter operator

GROUP 3: Dinkey locomotive or motorperson (up to and including 10 tons)

GROUP 4: Bit sharpener; Equipment greaser (grease truck); Slip form pump operator (power-driven hydraulic lifting device for concrete forms); Tugger hoist operator (1 drum); Tunnel locomotive operator (over 10 and up to and including 30 tons)

GROUP 5: Backhoe operator (up to and including 3/4 yd.); Small Ford, Case or similar; Drill doctor; Grouting machine operator; Heading shield operator; Heavy-duty repairperson; Loader operator (Athey, Euclid, Sierra and similar types); Mucking machine operator (1/4 yd., rubber-tired, rail or track type); Pneumatic concrete placing machine operator (Hackley-Presswell or similar type); Pneumatic heading shield (tunnel); Pumpcrete gun operator; Tractor compressor drill combination operator; Tugger hoist operator (2 drum); Tunnel locomotive operator (over 30 tons)

GROUP 6: Heavy Duty Repairman

GROUP 7: Tunnel mole boring machine operator

ENGINEERS ZONES

$1.00 additional per hour for all of IMPERIAL County and the portions of KERN, RIVERSIDE & SAN BERNARDINO Counties as defined below:

That area within the following Boundary: Begin in San Bernardino County, approximately 3 miles NE of the intersection of I-15 and the California State line at that point which is the NW corner of Section 1, T17N,m R14E, San Bernardino

Meridian. Continue W in a straight line to that point which is the SW corner of the northwest quarter of Section 6, T27S, R42E, Mt. Diablo Meridian. Continue North to the intersection with the Inyo County Boundary at that point which is the NE corner of the western half of the northern quarter of Section 6, T25S, R42E, MDM. Continue W along the Inyo and San Bernardino County boundary until the intersection with Kern County, as that point which is the SE corner of Section 34, T24S, R40E, MDM. Continue W along the Inyo and Kern County boundary until the intersection with Tulare County, at that point which is the SW corner of the SE quarter of Section 32, T24S, R37E, MDM. Continue W along the Kern and Tulare County boundary, until that point which is the NW corner of T25S, R32E, MDM. Continue S following R32E lines to the NW corner of T31S, R32E, MDM. Continue W to the NW corner of T31S, R31E, MDM. Continue S to the SW corner of T32S, R31E, MDM. Continue W to SW corner of SE quarter of Section 34, T32S, R30E, MDM. Continue S to SW corner of T11N, R17W, SBM. Continue E along south boundary of T11N, SBM to SW corner of T11N, R7W, SBM. Continue S to SW corner of T9N, R7W, SBM. Continue E along south boundary of T9N, SBM to SW corner of T9N, R1E, SBM. Continue S along west boundary of R1E, SMB to Riverside County line at the SW corner of T1S, R1E, SBM. Continue E along south boundary of T1s, SBM (Riverside County Line) to SW corner of T1S, R10E, SBM. Continue S along west boundary of R10E, SBM to Imperial County line at the SW corner of T8S, R10E, SBM. Continue W along Imperial and Riverside county line to NW corner of T9S, R9E, SBM. Continue S along the boundary between Imperial and San Diego Counties, along the west edge of R9E, SBM to the south boundary of Imperial County/California state line. Follow the California state line west to Arizona state line, then north to Nevada state line, then continuing NW back to start at the point which is the NW corner of Section 1, T17N, R14E, SBM

$1.00 additional per hour for portions of SAN LUIS OBISPO, KERN, SANTA BARBARA & VENTURA as defined below:

That area within the following Boundary: Begin approximately 5 miles north of the community of Cholame, on the Monterey County and San Luis Obispo County boundary at the NW corner of T25S, R16E, Mt. Diablo Meridian. Continue south along the west side of R16E to the SW corner of T30S, R16E, MDM. Continue E to SW corner of T30S, R17E, MDM. Continue S to SW corner of T31S, R17E, MDM. Continue E to SW corner of T31S, R18E, MDM. Continue S along West side of R18E, MDM as it crosses into San Bernardino Meridian numbering area and becomes R30W. Follow the west side of R30W, SBM to the SW corner of T9N, R30W, SBM. Continue E along the south edge of T9N, SBM to the Santa Barbara County and Ventura County boundary at that point whch is the SW corner of Section 34.T9N, R24W, SBM, continue S along the Ventura County line to that point which is the SW corner of the SE quarter of Section 32, T7N, R24W, SBM. Continue E along the south edge of T7N, SBM to the SE corner to T7N, R21W, SBM. Continue N along East side of R21W, SBM to Ventura County and Kern County boundary at the NE corner of T8N, R21W. Continue W along the Ventura County and Kern County boundary to the SE corner of T9N, R21W. Continue North along the East edge of R21W, SBM to the NE corner of T12N, R21W, SBM. Continue West along the north edge of T12N, SBM to the SE corner of

T32S, R21E, MDM. [T12N SBM is a think strip between T11N SBM and T32S MDM]. Continue North along the East side of R21E, MDM to the Kings County and Kern County border at the NE corner of T25S, R21E, MDM, continue West along the Kings County and Kern County Boundary until the intersection of San Luis Obispo County. Continue west along the Kings County and San Luis Obispo County boundary until the intersection with Monterey County. Continue West along the Monterey County and San Luis Obispo County boundary to the beginning point at the NW corner of T25S, R16E, MDM.

$2.00 additional per hour for INYO and MONO Counties and the Northern portion of SAN BERNARDINO County as defined below:

That area within the following Boundary: Begin at the intersection of the northern boundary of Mono County and the California state line at the point which is the center of Section 17, T10N, R22E, Mt. Diablo Meridian. Continue S then SE along the entire western boundary of Mono County, until it reaches Inyo County at the point which is the NE corner of the Western half of the NW quarter of Section 2, T8S, R29E, MDM. Continue SSE along the entire western boundary of Inyo County, until the intersection with Kern County at the point which is the SW corner of the SE 1/4 of Section 32, T24S, R37E, MDM. Continue E along the Inyo and Kern County boundary until the intersection with San Bernardino County at that point which is the SE corner of section 34, T24S, R40E, MDM. Continue E along the Inyo and San Bernardino County boundary until the point which is the NE corner of the Western half of the NW quarter of Section 6, T25S, R42E, MDM. Continue S to that point which is the SW corner of the NW quarter of Section 6, T27S, R42E, MDM. Continue E in a straight line to the California and Nevada state border at the point which is the NW corner of Section 1, T17N, R14E, San Bernardino Meridian. Then continue NW along the state line to the starting point, which is the center of Section 18, T10N, R22E, MDM.

REMAINING AREA NOT DEFINED ABOVE RECIEVES BASE RATE

ENGI0012-004 08/01/2014

	Rates	Fringes
OPERATOR: Power Equipment (DREDGING)		
(1) Leverman	$ 48.60	22.40
(2) Dredge dozer	$ 42.63	22.40
(3) Deckmate	$ 42.52	22.40
(4) Winch operator (stern winch on dredge)	$ 41.97	22.40
(5) Fireman-Oiler, Deckhand, Bargeman, Leveehand	$ 41.43	22.40
(6) Barge Mate	$ 42.04	22.40

IRON0377-002 01/01/2015

	Rates	Fringes
Ironworkers:		
Fence Erector	$ 27.08	18.24
Ornamental, Reinforcing and Structural	$ 33.50	28.20

PREMIUM PAY:

$6.00 additional per hour at the following locations:

China Lake Naval Test Station, Chocolate Mountains Naval Reserve-Niland,
Edwards AFB, Fort Irwin Military Station, Fort Irwin Training Center-Goldstone, San Clemente Island, San Nicholas Island, Susanville Federal Prison, 29 Palms - Marine Corps, U.S. Marine Base - Barstow, U.S. Naval Air Facility - Sealey, Vandenberg AFB

$4.00 additional per hour at the following locations:

Army Defense Language Institute - Monterey, Fallon Air Base, Naval Post Graduate School - Monterey, Yermo Marine Corps Logistics Center

$2.00 additional per hour at the following locations:

Port Hueneme, Port Mugu, U.S. Coast Guard Station - Two Rock

LABO0220-001 07/01/2014

	Rates	Fringes
LABORER (TUNNEL)		
GROUP 1	$ 35.74	16.48
GROUP 2	$ 36.06	16.48
GROUP 3	$ 36.52	16.48
GROUP 4	$ 37.21	16.48
LABORER		
GROUP 1	$ 30.19	16.48
GROUP 2	$ 30.74	16.48
GROUP 3	$ 31.29	16.48
GROUP 4	$ 32.84	16.48
GROUP 5	$ 33.19	16.48

LABORER CLASSIFICATIONS

GROUP 1: Cleaning and handling of panel forms; Concrete screeding for rough strike-off; Concrete, water curing; Demolition laborer, the cleaning of brick if performed by a worker performing any other phase of demolition work, and the cleaning of lumber; Fire watcher, limber, brush loader, piler and debris handler; Flag person; Gas, oil and/or water pipeline laborer; Laborer, asphalt-rubber material loader; Laborer, general or construction; Laborer, general clean-up; Laborer, landscaping; Laborer, jetting; Laborer, temporary water and air lines; Material hose operator (walls, slabs, floors and decks); Plugging, filling of shee bolt holes; Dry packing of concrete; Railroad maintenance,

repair track person and road beds; Streetcar and railroad construction track laborers; Rigging and signaling; Scaler; Slip form raiser; Tar and mortar; Tool crib or tool house laborer; Traffic control by any method; Window cleaner; Wire mesh pulling - all concrete pouring operations

GROUP 2: Asphalt shoveler; Cement dumper (on 1 yd. or larger mixer and handling bulk cement); Cesspool digger and installer; Chucktender; Chute handler, pouring concrete, the handling of the chute from readymix trucks, such as walls, slabs, decks, floors, foundation, footings, curbs, gutters and sidewalks; Concrete curer, impervious membrane and form oiler; Cutting torch operator (demolition); Fine grader, highways and street paving, airport, runways and similar type heavy construction; Gas, oil and/or water pipeline wrapper - pot tender and form person; Guinea chaser; Headerboard person - asphalt; Laborer, packing rod steel and pans; Membrane vapor barrier installer; Power broom sweeper (small); Riprap stonepaver, placing stone or wet sacked concrete; Roto scraper and tiller; Sandblaster (pot tender); Septic tank digger and installer(lead); Tank scaler and cleaner; Tree climber, faller, chain saw operator, Pittsburgh chipper and similar type brush shredder; Underground laborer, including caisson bellower

GROUP 3: Buggymobile person; Concrete cutting torch; Concrete pile cutter; Driller, jackhammer, 2-1/2 ft. drill steel or longer; Dri-pak-it machine; Gas, oil and/or water pipeline wrapper, 6-in. pipe and over, by any method, inside and out; High scaler (including drilling of same); Hydro seeder and similar type; Impact wrench multi-plate; Kettle person, pot person and workers applying asphalt, lay-kold, creosote, lime caustic and similar type materials ("applying" means applying, dipping, brushing or handling of such materials for pipe wrapping and waterproofing); Operator of pneumatic, gas, electric tools, vibrating machine, pavement breaker, air blasting, come-alongs, and similar mechanical tools not separately classified herein; Pipelayer's backup person, coating, grouting, making of joints, sealing, caulking, diapering and including rubber gasket joints, pointing and any and all other services; Rock slinger; Rotary scarifier or multiple head concrete chipping scarifier; Steel headerboard and guideline setter; Tamper, Barko, Wacker and similar type; Trenching machine, hand-propelled

GROUP 4: Asphalt raker, lute person, ironer, asphalt dump person, and asphalt spreader boxes (all types); Concrete core cutter (walls, floors or ceilings), grinder or sander; Concrete saw person, cutting walls or flat work, scoring old or new concrete; Cribber, shorer, lagging, sheeting and trench bracing, hand-guided lagging hammer; Head rock slinger; Laborer, asphalt- rubber distributor boot person; Laser beam in connection with laborers' work; Oversize concrete vibrator operator, 70 lbs. and over; Pipelayer performing all services in the laying and installation of pipe from the point of receiving pipe in the ditch until completion of operation, including any and all forms of tubular material, whether pipe, metallic or non-metallic, conduit and any other stationary type of tubular device

used for the conveying of any substance or element, whether water, sewage, solid gas, air, or other product whatsoever and without regard to the nature of material from which the tubular material is fabricated; No-joint pipe and stripping of same; Prefabricated manhole installer; Sandblaster (nozzle person), water blasting, Porta Shot-Blast

GROUP 5: Blaster powder, all work of loading holes, placing and blasting of all powder and explosives of whatever type, regardless of method used for such loading and placing; Driller: All power drills, excluding jackhammer, whether core, diamond, wagon, track, multiple unit, and any and all other types of mechanical drills without regard to the form of motive power; Toxic waste removal

TUNNEL LABORER CLASSIFICATIONS

GROUP 1: Batch plant laborer; Changehouse person; Dump person; Dump person (outside); Swamper (brake person and switch person on tunnel work); Tunnel materials handling person; Nipper; Pot tender, using mastic or other materials (for example, but not by way of limitation, shotcrete, etc.);

GROUP 2: Bull gang mucker, track person; Chucktender, Cabletender; Concrete crew, including rodder and spreader; Loading and unloading agitator cars; Vibrator person, jack hammer, pneumatic tools (except driller)

GROUP 3: Blaster, driller, powder person; Chemical grout jet person; Cherry picker person; Grout gun person; Grout mixer person; Grout pump person; Jackleg miner; Jumbo person; Kemper and other pneumatic concrete placer operator; Miner, tunnel (hand or machine); Nozzle person; Operating of troweling and/or grouting machines; Powder person (primer house); Primer person; Sandblaster; Shotcrete person; Steel form raiser and setter; Timber person, retimber person, wood or steel; Tunnel Concrete finisher

GROUP 4: Diamond driller; Sandblaster; Shaft and raise work

LABO0220-004 07/01/2014

	Rates	Fringes
Brick Tender	$ 29.12	15.78

LABO0300-005 01/01/2014

	Rates	Fringes
Asbestos Removal Laborer	$ 28.00	15.25

SCOPE OF WORK: Includes site mobilization, initial site cleanup, site preparation, removal of asbestos-containing material and toxic waste, encapsulation, enclosure and disposal of asbestos- containing materials and toxic waste by hand or with equipment or machinery; scaffolding, fabrication of temporary wooden barriers and assembly of

decontamination stations.

LABO0345-001 07/01/2014

	Rates	Fringes
LABORER (GUNITE)		
GROUP 1	$ 34.79	17.92
GROUP 2	$ 33.84	17.92
GROUP 3	$ 30.30	17.92

FOOTNOTE: GUNITE PREMIUM PAY: Workers working from a Bosn'n's Chair or suspended from a rope or cable shall receive 40 cents per hour above the foregoing applicable classification rates. Workers doing gunite and/or shotcrete work in a tunnel shall receive 35 cents per hour above the foregoing applicable classification rates, paid on a portal-to-portal basis. Any work performed on, in or above any smoke stack, silo, storage elevator or similar type of structure, when such structure is in excess of 75'-0" above base level and which work must be performed in whole or in part more than 75'-0" above base level, that work performed above the 75'-0" level shall be compensated for at 35 cents per hour above the applicable classification wage rate.

GUNITE LABORER CLASSIFICATIONS

GROUP 1: Rodmen, Nozzlemen

GROUP 2: Gunmen

GROUP 3: Reboundmen

LABO1184-001 07/01/2014

	Rates	Fringes
Laborers: (HORIZONTAL DIRECTIONAL DRILLING)		
(1) Drilling Crew Laborer	$ 31.65	13.33
(2) Vehicle Operator/Hauler	$ 31.82	13.33
(3) Horizontal Directional Drill Operator	$ 33.67	13.33
(4) Electronic Tracking Locator	$ 35.67	13.33
Laborers: (STRIPING/SLURRY SEAL)		
GROUP 1	$ 32.56	16.28
GROUP 2	$ 33.86	16.28
GROUP 3	$ 35.87	16.28
GROUP 4	$ 37.61	16.28

LABORERS - STRIPING CLASSIFICATIONS

GROUP 1: Protective coating, pavement sealing, including repair and filling of cracks by any method on any surface in parking lots, game courts and playgrounds; carstops;

operation of all related machinery and equipment; equipment repair technician

GROUP 2: Traffic surface abrasive blaster; pot tender - removal of all traffic lines and markings by any method (sandblasting, waterblasting, grinding, etc.) and preparation of surface for coatings. Traffic control person: controlling and directing traffic through both conventional and moving lane closures; operation of all related machinery and equipment

GROUP 3: Traffic delineating device applicator: Layout and application of pavement markers, delineating signs, rumble and traffic bars, adhesives, guide markers, other traffic delineating devices including traffic control. This category includes all traffic related surface preparation (sandblasting, waterblasting, grinding) as part of the application process. Traffic protective delineating system installer: removes, relocates, installs, permanently affixed roadside and parking delineation barricades, fencing, cable anchor, guard rail, reference signs, monument markers; operation of all related machinery and equipment; power broom sweeper

GROUP 4: Striper: layout and application of traffic stripes and markings; hot thermo plastic; tape traffic stripes and markings, including traffic control; operation of all related machinery and equipment

---

LABO1414-001 08/07/2013

	Rates	Fringes
LABORER		
PLASTER CLEAN-UP LABORER....	$ 27.45	16.36
PLASTER TENDER.....	$ 30.00	16.36

Work on a swing stage scaffold: $1.00 per hour additional.

PAIN0036-007 07/01/2014

	Rates	Fringes
Painters:		
(1) Repaint Including Lead Abatement.....	$ 23.84	12.28
(2) High Iron & Steel.....	$ 30.28	12.28
(3) Journeyman Painter including Lead Abatement....	$ 28.28	12.28
(4) Industrial.....	$ 31.12	12.33
(5) All other work.....	$ 28.28	12.28

REPAINT of any previously painted structure. Exceptions: work involving the aerospace industry, breweries, commercial recreational facilities, hotels which operate commercial establishments as part of hotel service, and sports facilities.

HIGH IRON & STEEL:
Aerial towers, towers, radio towers, smoke stacks, flag poles

(any flag poles that can be finished from the ground with a ladder excluded), elevated water towers, steeples and domes in their entirety and any other extremely high and hazardous work, cooning steel, bos'n chair, or other similar devices, painting in other high hazardous work shall be classified as high iron & steel

---

PAIN0036-008 10/01/2014

	Rates	Fringes
DRYWALL FINISHER/TAPER	$ 35.18	15.91

PAIN0169-002 01/01/2015

	Rates	Fringes
GLAZIER	$ 34.83	19.75

PAIN1247-002 01/01/2015

	Rates	Fringes
SOFT FLOOR LAYER	$ 29.85	13.56

PLAS0200-001 08/06/2014

	Rates	Fringes
PLASTERER	$ 37.43	13.28

PLAS0500-002 07/07/2014

	Rates	Fringes
CEMENT MASON/CONCRETE FINISHER	$ 31.85	19.55

PLUM0016-001 07/01/2014

	Rates	Fringes
PLUMBER/PIPEFITTER		
Plumber and Pipefitter All other work except work on new additions and remodeling of bars, restaurant, stores and commercial buildings not to exceed 5,000 sq. ft. of floor space and work on strip malls, light commercial, tenant improvement and remodel work	$ 44.71	20.36
Work ONLY on new additions and remodeling of bars, restaurant, stores and commercial buildings not		

```
     to exceed 5,000 sq. ft. of
     floor space.................$ 43.33            19.38
     Work ONLY on strip malls,
     light commercial, tenant
     improvement and remodel
     work........................$ 34.59            17.71
-----------------------------------------------------------------
 PLUM0345-001 07/01/2014

                                   Rates          Fringes

PLUMBER
     Landscape/Irrigation Fitter.$ 29.27            19.75
     Sewer & Storm Drain Work....$ 33.24            17.13
-----------------------------------------------------------------
 ROOF0036-002 08/01/2014

                                   Rates          Fringes

ROOFER..........................$ 35.02            13.57

  FOOTNOTE: Pitch premium: Work on which employees are exposed
  to pitch fumes or required to handle pitch, pitch base or
  pitch impregnated products, or any material containing coal
  tar pitch, the entire roofing crew shall receive $1.75 per
  hour "pitch premium" pay.

-----------------------------------------------------------------
 SFCA0669-014 07/01/2013

                                   Rates          Fringes

SPRINKLER FITTER................$ 32.98            19.35
-----------------------------------------------------------------
 SHEE0273-002 08/01/2013

                                   Rates          Fringes

SHEET METAL WORKER..............$ 40.50            22.54

  HOLIDAYS: New Year's Day, Martin Luther King Day, President's
  Day, Good Friday, Memorial Day, Indepdendence Day, Labor
  Day, Veterans Day,Thankisgiving Day & Friday after,
  Christmas Day

-----------------------------------------------------------------
 TEAM0011-002 07/01/2014

                                   Rates          Fringes

TRUCK DRIVER
     GROUP  1....................$ 27.99            24.14
     GROUP  2....................$ 28.14            24.14
     GROUP  3....................$ 28.27            24.14
     GROUP  4....................$ 28.46            24.14
     GROUP  5....................$ 28.49            24.14
     GROUP  6....................$ 28.52            24.14
     GROUP  7....................$ 28.77            24.14
     GROUP  8....................$ 29.02            24.14
     GROUP  9....................$ 29.22            24.14
```

```
     GROUP 10....................$ 29.52            24.14
     GROUP 11....................$ 30.02            24.14
     GROUP 12....................$ 30.45            24.14

WORK ON ALL MILITARY BASES:
PREMIUM PAY:  $3.00 per hour additional.
  [29 palms Marine Base, Camp Roberts, China Lake, Edwards AFB,
  El Centro Naval Facility, Fort Irwin, Marine Corps
  Logistics Base at Nebo & Yermo, Mountain Warfare Training
  Center, Bridgeport,   Point Arguello, Point Conception,
  Vandenberg AFB]


TRUCK DRIVERS CLASSIFICATIONS


GROUP 1: Truck driver

  GROUP 2: Driver of vehicle or combination of vehicles - 2
  axles; Traffic control pilot car excluding moving heavy
  equipment permit load; Truck mounted broom

  GROUP 3: Driver of vehicle or combination of vehicles - 3
  axles; Boot person; Cement mason distribution truck;  Fuel
  truck driver; Water truck - 2 axle; Dump truck, less than
  16 yds. water level; Erosion control driver

  GROUP 4: Driver of transit mix truck, under 3 yds.; Dumpcrete
  truck, less than 6-1/2 yds. water level

  GROUP 5: Water truck, 3 or more axles; Truck greaser and tire
  person ($0.50 additional for tire person); Pipeline and
  utility working truck driver, including winch truck and
  plastic fusion, limited to pipeline and utility work;
  Slurry truck driver

  GROUP 6: Transit mix truck, 3 yds. or more; Dumpcrete truck,
  6-1/2 yds. water level and over; Vehicle or combination of
  vehicles - 4 or more axles; Oil spreader truck; Dump truck,
  16 yds. to 25 yds. water level

  GROUP 7: A Frame, Swedish crane or similar; Forklift driver;
  Ross carrier driver

  GROUP 8: Dump truck, 25 yds. to 49 yds. water level; Truck
  repair person; Water pull - single engine; Welder

  GROUP 9: Truck repair person/welder; Low bed driver, 9 axles
  or over

  GROUP 10: Dump truck - 50 yds. or more water level; Water
  pull - single engine with attachment

  GROUP 11: Water pull - twin engine; Water pull - twin engine
  with attachments; Winch truck driver - $1.25 additional
  when operating winch or similar special attachments

GROUP 12: Boom Truck 17K and above

-----------------------------------------------------------------
```

WELDERS - Receive rate prescribed for craft performing operation to which welding is incidental.

==========

Unlisted classifications needed for work not included within the scope of the classifications listed may be added after award only as provided in the labor standards contract clauses (29CFR 5.5 (a) (1) (ii)).

The body of each wage determination lists the classification and wage rates that have been found to be prevailing for the cited type(s) of construction in the area covered by the wage determination. The classifications are listed in alphabetical order of "identifiers" that indicate whether the particular rate is a union rate (current union negotiated rate for local), a survey rate (weighted average rate) or a union average rate (weighted union average rate).

Union Rate Identifiers

A four letter classification abbreviation identifier enclosed in dotted lines beginning with characters other than "SU" or "UAVG" denotes that the union classification and rate were prevailing for that classification in the survey. Example: PLUM0198-005 07/01/2014. PLUM is an abbreviation identifier of the union which prevailed in the survey for this classification, which in this example would be Plumbers. 0198 indicates the local union number or district council number where applicable, i.e., Plumbers Local 0198. The next number, 005 in the example, is an internal number used in processing the wage determination. 07/01/2014 is the effective date of the most current negotiated rate, which in this example is July 1, 2014.

Union prevailing wage rates are updated to reflect all rate changes in the collective bargaining agreement (CBA) governing this classification and rate.

Survey Rate Identifiers

Classifications listed under the "SU" identifier indicate that no one rate prevailed for this classification in the survey and the published rate is derived by computing a weighted average rate based on all the rates reported in the survey for that classification. As this weighted average rate includes all rates reported in the survey, it may include both union and non-union rates. Example: SULA2012-007 5/13/2014. SU indicates the rates are survey rates based on a weighted average calculation of rates and are not majority rates. LA indicates the State of Louisiana. 2012 is the year of survey on which these classifications and rates are based. The next number, 007 in the example, is an internal number used in producing the wage determination. 5/13/2014 indicates the survey completion

date for the classifications and rates under that identifier.

Survey wage rates are not updated and remain in effect until a new survey is conducted.

Union Average Rate Identifiers

Classification(s) listed under the UAVG identifier indicate that no single majority rate prevailed for those classifications; however, 100% of the data reported for the classifications was union data. EXAMPLE: UAVG-OH-0010 08/29/2014. UAVG indicates that the rate is a weighted union average rate. OH indicates the state. The next number, 0010 in the example, is an internal number used in producing the wage determination. 08/29/2014 indicates the survey completion date for the classifications and rates under that identifier.

A UAVG rate will be updated once a year, usually in January of each year, to reflect a weighted average of the current negotiated/CBA rate of the union locals from which the rate is based.

WAGE DETERMINATION APPEALS PROCESS

1.) Has there been an initial decision in the matter? This can be:

* an existing published wage determination
* a survey underlying a wage determination
* a Wage and Hour Division letter setting forth a position on a wage determination matter
* a conformance (additional classification and rate) ruling

On survey related matters, initial contact, including requests for summaries of surveys, should be with the Wage and Hour Regional Office for the area in which the survey was conducted because those Regional Offices have responsibility for the Davis-Bacon survey program. If the response from this initial contact is not satisfactory, then the process described in 2.) and 3.) should be followed.

With regard to any other matter not yet ripe for the formal process described here, initial contact should be with the Branch of Construction Wage Determinations. Write to:

Branch of Construction Wage Determinations
Wage and Hour Division
U.S. Department of Labor
200 Constitution Avenue, N.W.
Washington, DC 20210

2.) If the answer to the question in 1.) is yes, then an interested party (those affected by the action) can request review and reconsideration from the Wage and Hour Administrator (See 29 CFR Part 1.8 and 29 CFR Part 7). Write to:

Wage and Hour Administrator
U.S. Department of Labor
200 Constitution Avenue, N.W.
Washington, DC 20210

The request should be accompanied by a full statement of the interested party's position and by any information (wage payment data, project description, area practice material, etc.) that the requestor considers relevant to the issue.

3.) If the decision of the Administrator is not favorable, an interested party may appeal directly to the Administrative Review Board (formerly the Wage Appeals Board). Write to:

Administrative Review Board
U.S. Department of Labor
200 Constitution Avenue, N.W.
Washington, DC 20210

4.) All decisions by the Administrative Review Board are final.

==========

END OF GENERAL DECISION

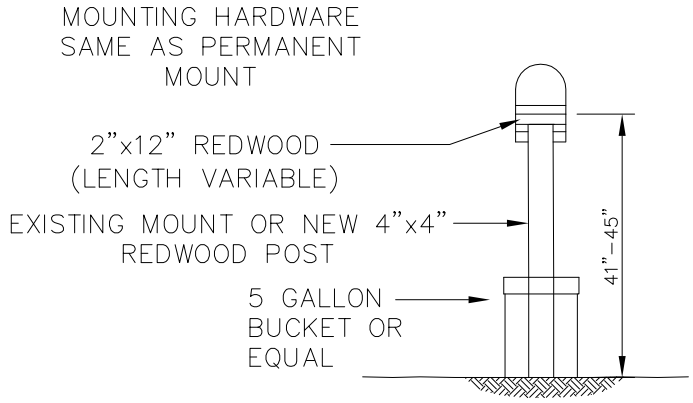

TEMPORARY MOUNT – OKAY DURING CONSTRUCTION

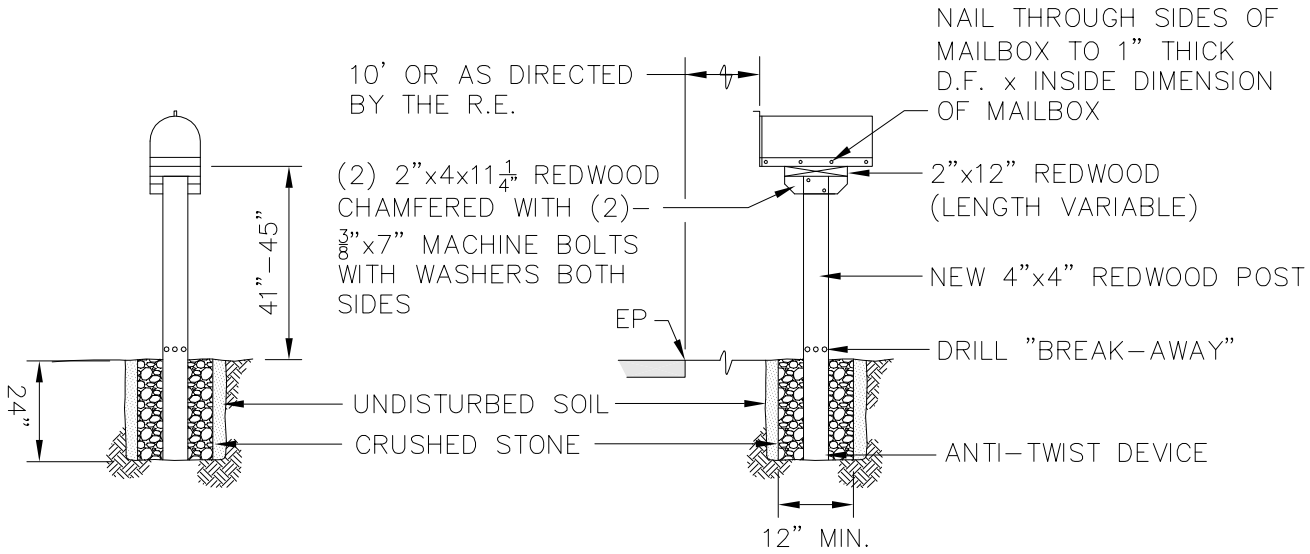

SINGLE

TYPICAL ELEVATION

PERMANENT MOUNT

NOTES:

1. CONFORM TO SECTION 7.02 OF CALTRANS TRAFFIC MANUAL, USPS STANDARDS, AND AASHTO ROADSIDE DESIGN GUIDE, CHAPTER 11

2. ALL LUMBER SHALL BE S4S

TYPICAL MAIL BOX STANDARD DETAIL

NOT TO SCALE