2013-14 ASPHALT OVERLAY
SOUTH BAY BOULEVARD
FROM LOS OSOS VALLEY ROAD
TO SANTA YSABEL AVENUE
LOS OSOS, CA
CONTRACT NO. 300504

TABLE OF CONTENTS

Beginning w/
Page No.

NOTICE AND INSTRUCTIONS TO BIDDERS 1

NOTICE TO BIDDERS 2

BID PROTESTS AND OTHER CHALLENGES TO AWARD OF CONSTRUCTION CONTRACTS 5

SPECIAL INSTRUCTIONS TO BIDDERS 6

BID PROPOSAL AND FORMS 7

BID PROPOSAL 8

ADDENDA ACKNOWLEDGMENT 10

BIDDERS INFORMATION LIST 12

DESIGNATION OF SUBCONTRACTORS FORM 13

BIDDER'S NON-COLLUSION DECLARATION (STATE FORM) 14

BIDDER'S BOND 15

CONTRACT AGREEMENT 18

AGREEMENT 19

PERFORMANCE BOND 29

PAYMENT BOND 32

SPECIAL PROVISIONS 35

SECTION 1.SPECIFICATIONS AND PLANS 39

1-1.01 SPECIFICATIONS AND PLANS 39

SECTION 2. PROPOSAL REQUIREMENTS AND CONDITIONS 41

2-1.01 PROPOSAL REQUIREMENTS AND CONDITIONS 41

2-1.02 REQUIRED LISTING OF PROPOSED SUBCONTRACTORS 42

SECTION 3. AWARD AND EXECUTION OF CONTRACT 43

3-1.01 AWARD OF CONTRACT 43

3-1.02 CONTRACT BONDS 43

3-1.03 EXECUTION OF CONTRACT 44

SECTION 4. PROSECUTION AND PROGRESS OF THE WORK 45

4-1.01 GENERAL 45

4-1.02 LIQUIDATED DAMAGES 45

4-1.03 CONTRACT SUBMITTALS 45

4-1.04 MANDATORY PRE-CONSTRUCTION CONFERENCE 46
SECTION 5. GENERAL AND MISCELLANEOUS 47
5-1.01 DEFINITIONS AND TERMS 47
5-1.02 SCOPE OF WORK 47
5-1.03 CONTROL OF WORK 48
5-1.04 PREVAILING WAGE 50
5-1.05 PRESERVATION OF PROPERTY 51
5-1.06 PROGRESS SCHEDULE 51
5-1.07 MEASUREMENT AND PAYMENT 51
5-1.08 DETERMINATION OF DISPUTES 54
5-1.09 AUDIT OF RECORDS 57
5-1.10 CONTRACTOR'S REPORTS 57
5-1.11 REMOVAL OF ASBESTOS AND HAZARDOUS SUBSTANCES 57
5-1.12 SUBCONTRACTING 58
5-1.13 CONSTRUCTION SUBMITTALS 58
5-1.15 LEGAL ADDRESS OF THE CONTRACTOR 59
5-1.16 WEEKLY PROGRESS MEETINGS 59
5-1.17 GOVERNMENT CODE CLAIM REQUIREMENTS 60
5-1.18 SURFACE MINING AND RECLAMATION ACT 60
5-1.19 SUPPLEMENTAL WORK PAYMENTS 60
5-1.20 SOLID WASTE MANAGEMENT 61
SECTION 6. (*BLANK*) 64
SECTION 7. (*BLANK*) 64
SECTION 8. MATERIALS 65
SECTION 9. DESCRIPTION OF WORK 9-1
SECTION 10. CONSTRUCTION DETAILS 10-1
SECTION 11. AMENDMENT TO STANDARD SPECIFICATION 11-1
SECTION 12. ENVIRONMENTAL PERMIT SUMMARY FORM 12-1
SECTION 13. RULES GOVERNING BID PROTESTS AND OTHER CHALLENGES TO AWARDS OF CONSTRUCTION CONTRACTS 13-1
APPENDIX A – CONSTRUCTION DETAILS
B – PROJECT PLANS

COUNTY OF SAN LUIS OBISPO
DEPARTMENT OF PUBLIC WORKS AND TRANSPORTATION

NOTICE AND INSTRUCTIONS TO BIDDERS

FOR

2013-14 ASPHALT OVERLAY
SOUTH BAY BOULEVARD
FROM LOS OSOS VALLEY ROAD
TO SANTA YSABEL AVENUE
LOS OSOS, CA
CONTRACT NO. 300504

COUNTY OF SAN LUIS OBISPO
DEPARTMENT OF PUBLIC WORKS AND TRANSPORTATION
NOTICE TO BIDDERS

Sealed proposals will be received at the office of the County Clerk, 1055 Monterey Street, Room D-120, San Luis Obispo, California 93408 until 3:00 P.M. on Thursday, _____, 20__, which bids will then be opened and declared at 3:15 o'clock P.M. on the above mentioned date at a public meeting at 1055 Monterey Street, Room D-120, by the County Clerk, for the following Public Works Project:

2013-14 ASPHALT OVERLAY
SOUTH BAY BOULEVARD
FROM LOS OSOS VALLEY ROAD
TO SANTA YSABEL AVENUE
LOS OSOS, CA
CONTRACT NO. 300504

Any bid received at the Office of the Clerk of the Board of Supervisors of the County of San Luis Obispo after 3:00 P.M. on the date specified above shall not be considered, and shall be returned to the bidder unopened.

Bids are required for the entire work described herein.

An official bound copy of a reduced size set of the Project Plans, the Agreement, the Special Provisions, and blank forms suitable for use in bidding on said work may be obtained from the Department of Public Works, Room 207, County Government Center, San Luis Obispo, CA 93408 and may be purchased therefrom for $, (tax included), per bound copy, said purchase cost not to be refunded. Such documents must be purchased from the Department of Public Works in order to be recognized as an official planholder. No bid will be considered which is not on the forms herein provided. A full size set of the Project Plans and cross sections, if available, are charged separately at the department's current rates and will be provided only upon request.

Pursuant to the provisions of Section 1773 of the California Labor Code, the Board of Supervisors of the County of San Luis Obispo has obtained from the Director of the California Department of Industrial Relations the general prevailing rate of per diem wages and the general prevailing rate for holiday and overtime work for the locality in which the work is to be performed for each needed craft, classification, or type of workman. Copies of said prevailing rate of per diem wages are on file in the Office of the Clerk of the Board of Supervisors and available at the California Department of Industrial Relations' web site address at: www.dir.ca.gov/DLSR/PWD.

Bidders are advised that any contractor who is awarded a public works project and intends to use a craft or classification not shown on the general prevailing wage determination may be required to pay the wage rate of that craft or classification most closely related to it as shown in the general determinations effective at the time of the call for bids.

Travel and Subsistence Payments shall be in accordance with Section 1773.1 of the Labor Code. Wage rates for holiday and overtime work shall be in accordance with Section 1773 of the Labor Code. Attention is directed to the provisions in Sections 1777.5, 1777.6, and 1777.7 of the Labor

Code concerning the employment of apprentices by the Contractor or any subcontractor. Attention is directed to the provisions in Section 1776 of the Labor Code concerning payroll records.

Attention is directed to the provisions in Sections 1810 – 1815 of the Labor Code concerning work hours.

Attention is directed to the provisions of Section 2-1.02, "Required Listing of Proposed Subcontractors," of the Special Provisions regarding the requirement that proposed subcontractors be listed in the bidder's proposal. A "DESIGNATION OF SUBCONTRACTORS" form for listing subcontractors, as required, is included in the section titled "Bid Proposal and Forms" of the Contract Documents. This form must be completed and submitted with bidder's bid proposal.

All bonds and endorsements thereto to be submitted pursuant to this contract shall be written by a company authorized to do surety business in the State of California.

Each bid must be accompanied by a form of bidder's security, namely cash, certified check, cashier's check, or bidder's bond, in the amount of ten percent (10%) of the total of the bid.

All addenda issued before the time in which to submit bids expires shall form a part of the Contract Documents which are the subject of the bid. Any such addendum issued before the time in which to submit bids expires shall be e-mailed to each planholder on the County's official planholder list, at the e-mail address provided to the County at the time bid documents were purchased from the Department of Public Works. An informational electronic copy of such addenda will also be posted to the County's website for the Bidder's convenience at the following web address:

http://www.slocounty.ca.gov/PW/Design_Division/Projects_Out_To_Bid.htm

All bidders are required to acknowledge and confirm receipt of each and every addendum in their bid proposal.

Within ten (10) calendar days, not including Saturdays, Sundays, and legal holidays, after receipt of notice that the contract has been awarded, the successful bidder, shall execute a written contract with the County in the form prescribed herein.

At the time of execution of the contract, the successful bidder shall submit the certificates of insurance stipulated in Article 7 of the Agreement, and, in addition thereto, shall furnish a "Performance Bond" in the sum of one hundred percent (100%) of the contract bid to guarantee the performance of the contract, and a "Payment Bond" in the sum of one hundred percent (100%) of the contract bid. The bond forms are included in the section titled "Agreement" of the Contract Documents.

Attention is directed to the provisions of Section 5-1.07, "Measurement and Payment," of the Special Provisions permitting the substitution of equivalent securities for any moneys withheld to ensure performance of this contract. Said Section 5-1.07 is incorporated by reference in this invitation for bid as if fully set forth at length.

The Board of Supervisors reserves the right to reject any or all bids, and to waive discrepancies, irregularities, informalities or any other errors in the bids or bidding, if to do so seems to best serve the public interest. The right of Board of Supervisors to waive errors applies even if the Contract

Documents state that a discrepancy, irregularity, informality or other error makes a bid nonresponsive, so long as the error does not constitute a material error.

The successful bidder must be licensed to perform the work in accordance with the laws of the State of California. Accordingly, the successful bidder shall possess a Class A general engineering contractor's license at the time this contract is awarded. In the alternative, the successful bidder shall possess a specialty contractor's license that permits the successful bidder to perform with his or her own organization contract work amounting to not less than 30% of the original total contract price and to subcontract the remaining work in accordance with Section 5-1.055, "Subcontracting," of the Amendments to the Standard Specifications. Failure of the bidder to be properly and adequately licensed shall constitute a failure to execute the contract and shall result in the forfeiture of the bidder's security.

Bidders must satisfy themselves by personal examination of the location of the proposed work and by such other means as they prefer as to the actual conditions and requirements of the work, and shall not at any time after submission of the bid dispute, complain, or assert that there was any misunderstanding in regard to the nature or amount of work to be done.

By order of the Board of Supervisors County of San Luis Obispo made this _____day of _____, 20_____.

County Clerk and Ex-officio Clerk
of the Board of Supervisors

By _____
Deputy Clerk

BID PROTESTS AND OTHER CHALLENGES TO AWARD OF CONTSTRUCTION CONTRACTS

Bid protests and any other challenges to the award of this construction contract must comply with the requirements described in the "Policy Governing Bid Protests and other Challenges to Construction Contracts" ("Policy"), a copy of which is attached to this contract. In addition to the requirements described in the Policy, any bid protest must be submitted in writing to the Department of Public Works, Room 207, County Government Center, 976 Osos Street, San Luis Obispo, CA 93408; Attention: Design Engineer.

SPECIAL INSTRUCTIONS TO BIDDERS

All bidder Requests for Information must be submitted no later than 3 days prior to the bid opening date. Requests submitted after said date may not be considered. Bidders should submit Requests for Information to the County during the bid period at the following website:

http://www.slocounty.ca.gov/PW/Design_Division/Projects_Out_To_Bid.htm

Attention is directed to Section 4-1.03, "Contract Submittals," of the Special Provisions regarding the time period to submit the listed items upon receipt of the fully executed contract.

COUNTY OF SAN LUIS OBISPO
DEPARTMENT OF PUBLIC WORKS AND TRANSPORTATION

BID PROPOSAL AND FORMS

FOR

2013-14 ASPHALT OVERLAY
SOUTH BAY BOULEVARD
FROM LOS OSOS VALLEY ROAD
TO SANTA YSABEL AVENUE
LOS OSOS, CA
CONTRACT NO. 300504

BID PROPOSAL

TO: THE BOARD OF SUPERVISORS OF THE COUNTY OF SAN LUIS OBISPO, STATE OF CALIFORNIA:

Pursuant to and in compliance with your Notice to Bidders, the undersigned, as bidder, declares that the only person or parties interested in this proposal as principals are those named herein; that this proposal is made without collusion with any other person, firm or corporation; that he/she is aware of the provisions of Section 3700 of the Labor Code which require every employer to be insured against liability for workers' compensation or to undertake self insurance in accordance with the provisions of that code, and he/she will comply with such provisions before commencing the performance of the work of this contract; that he/she has carefully examined the location of the proposed work, the annexed proposed form of contract, and he/she proposes, and agrees if this proposal is accepted, that he/she will contract with the Board of Supervisors of the County of San Luis Obispo in the form of the copy of the contract annexed hereto, to provide all necessary machinery, tools, apparatus and other equipment needed, and to do all of the work and furnish all the materials specified in the contract, in the manner and the time therein prescribed, and according to the requirements of the Department of Public Works and Transportation as therein set forth, and that he/she will take in full payment therefor the following unit prices, to-wit:

SEE NEXT PAGE FOR BID PROPOSAL FORM

2013-14 ASPHALT OVERLAY
SOUTH BAY BOULEVARD
FROM LOS OSOS VALLEY ROAD TO SANTA YSABEL AVENUE
LOS OSOS, CA
CONTRACT NO. 300504
BID PROPOSAL

SOUTH BAY BOULEVARD (LOVR TO SANTA YSABEL)

ITEM NO.	CODE NO.	DESCRIPTION OF ITEM	APPROX. QUANTITY	UNIT OF MEASURE	UNIT PRICE (IN FIGURES) DOLLARS. CENTS	TOTAL AMOUNT DOLLARS. CENTS
1	70416	CONSTRUCTION AREA SIGNS	1	LS	LUMP SUM	
2	71325	TEMPORARY FENCE (TYPE ESA)	100	LF		
3	120100	TRAFFIC CONTROL SYSTEM	1	LS	LUMP SUM	
4	128650	PORTABLE CHANGEABLE MESSAGE SIGN	3	EA		
5	152422	ADJUST MONUMENT WELL	4	EA		
6	153103A	COLD PLANE ASPHALT CONCRETE (0.17' MAX.)	26700	SY		
7	153103A	COLD PLANE ASPHALT CONCRETE DIGOUTS (0.33' MAX.)	1335	SY		
8	374002	ASPHALTIC EMULSION (REJUVENATING SEAL COAT)	5	TON		
9	390132	HOT MIX ASPHALT (TYPE A) OVERLAY	3050	TON		
10	390132	HOT MIX ASPHALT (TYPE A) DIGOUTS	287	TON		
11	731504 (F)	MINOR CONCRETE (CURB AND GUTTER)	226	LF		
12	731623 (F)	MINOR CONCRETE (CURB RAMP)	3	EA		
13	731656	TRUNCATED DOME MAT	5	EA		
14	860811	DETECTOR LOOP	1	LS	LUMP SUM	
					TOTAL	

SUPPLEMENTAL WORK ITEMS

15		ALLOWANCE FOR SUPPLEMENTAL FLAGGING AND TRAFFIC CONTROL	1	LS	LUMP SUM	$ 10,000.00
16		ALLOWANCE FOR PAVING ASPHALT PRICE INDEX INCREASE	1	LS	LUMP SUM	$ 15,000.00
					TOTAL SUPPLEMENTAL WORK	$ 25,000.00

TOTAL BID _____

Bidder's Name: _____

Bidder represents that he/she has hereinabove set forth for each unit basis item of work a unit price and a total for the item, and for each lump sum item a total for the item, all in clearly legible figures in the respective spaces provided for that purpose. In the case of unit basis items, the amount set forth under the "Total" column is the extension of the unit price bid on the basis of the approximate quantity for the item.

In case of discrepancy between the unit price and the total set forth for a unit basis item, the unit price shall prevail, provided, however, if the amount set forth as a unit price is ambiguous, unintelligible, or uncertain for any cause, or is omitted, or is the same amount as the entry in the "Total" column, then the amount set forth in the "Total" column for the item shall prevail and shall be divided by the estimated quantity for the item and the price thus obtained shall be the unit price.

Proposals in which the prices are mathematically or materially unbalanced may be rejected. A bid is mathematically unbalanced if the bid is structured on the basis of nominal prices for some work and inflated prices for other work; that is, each element of the bid must carry its proportionate share of the total cost of the work plus profits. A bid is materially unbalanced if there is reasonable doubt that award to the bidder submitting the mathematically unbalanced bid will result in the lowest ultimate cost to the County.

Bidder shall execute and submit with their proposal, each of the following:

- BIDDERS INFORMATION LIST
- DESIGNATION OF SUBCONTRACTORS
- BIDDER'S NON-COLLUSION DECLARATION (STATE FORM)
- BIDDER'S BOND

Bidder declares that he/she has read, and agrees to, the Special Provisions, including, without limitation, the provisions of Sections 1, 2, 3, 4, and 5 thereof.

Bidder shall list the name and address of each subcontractor to whom the bidder proposes to directly subcontract portions of the work as required by the provisions in Section 2-1.02, "Required Listing of Proposed Subcontractors," of these Special Provisions. The list of subcontractors shall also set forth the portion of work that will be done by each subcontractor listed. The "DESIGNATION OF SUBCONTRACTORS" form for listing the subcontractors is included in the section titled "Bid Proposal and Forms" of the Contract Documents.

Accompanying this bid proposal is a bidder's bond, cash, cashier's check, or a certified check, payable to the County of San Luis Obispo, for the sum of _____ _____ Dollars ($_____), said amount being at least ten percent (10%) of the total of the bid. The proceeds thereof shall become the property of the County of San Luis Obispo if the proposal is withdrawn after the time fixed in the Notice to Bidders for the opening of bids, or if, in case this bid is accepted by said Board of Supervisors and such bidder has received notice that the contract has been awarded to him/her, the undersigned shall fail within ten (10) calendar days, not including Saturdays, Sundays, and legal holidays, thereafter to execute a contract with the County and furnish the certificates of insurance and Payment and Performance bonds required by the Contract Documents. Otherwise, said guarantee, except a bidder's bond, will be returned to the undersigned.

This bid proposal may be withdrawn, in writing, prior to the time fixed in the Notice to Bidders for the opening of bids. It is understood and agreed that this bid proposal will not be withdrawn after the time fixed in the Notice to Bidders for the opening of bids. Bidders further agree that the failure of the County to open bids for this project exactly at the time fixed in said Notice shall not extend the time within which bids may be withdrawn.

The undersigned bidder will sign and deliver to the County of San Luis Obispo the written contract, together with the certificates of insurance and bonds described in the Notice to Bidders, within ten (10) calendar days, not including Saturday, Sundays, and legal holidays, after the undersigned has received notice that the contract has been awarded to him/her.

The undersigned, as bidder, declares that he/she is aware of the provisions of Section 3700 of the California Labor Code which require every employer to be insured against liability for workers' compensation or to undertake self insurance in accordance with the provisions of that code, and will comply with such provisions before commencing the performance of the work of this contract.

The bidder's execution of the signature portion of this bid proposal shall also constitute an endorsement and execution of those certifications, questionnaires, and assurances which are a part of this proposal.

ADDENDA: The undersigned acknowledges and confirms the receipt of the following Addenda**:**

Addenda Number	Date
_____	_____
_____	_____
_____	_____

and agrees that said addenda are covered in the bid proposal and shall form a part of the Contract Documents.

If bidder or other interested person is a corporation, state legal name of corporation, also names of the president, secretary, treasurer, and manager thereof; if a partnership, state true name of firm, also names of all individual co-partners composing firm; if bidder or other interested person is an individual, state first and last names in full.

_____

_____

Bidder warrants and represents that he/she is licensed in accordance with an Act providing for the registration of Contractors, License No. _____, Class _____, License Expiration Date _____. (Note: The successful bidder must possess the license classification specified in the Notice to Bidders upon award of this contract.)

Name of Bidder_____

Signature of Bidder_____

Printed Name and Title_____

Business Address_____

Telephone Number_____

Date_____

NOTICE. . . . . .If bidder is a corporation, the legal name of the corporation shall be set forth above together with the signature of the officer or officers authorized to sign contract in behalf of the corporation; if bidder is a partnership, the true name of the firm shall be set forth above together with the signature of the partner or partners authorized to sign contracts in behalf of the partnership; and if the bidder is an individual, his or her signature shall be placed above. If signature is by an agent, other than an officer of a corporation or a member of a partnership, a Power of Attorney must be on file with the County prior to opening of bids or submitted with the bid; otherwise, the bid will be disregarded as irregular and unauthorized.

RETURN THIS FORM WITH YOUR BID PROPOSAL

BIDDERS INFORMATION LIST

All bidders/proposers are required to provide the following information for all DBE and non-DBE contractors, who provided a proposal, bid, quote, or were contacted by the proposed prime contractor. This information is required from the proposed prime contractor and shall be submitted with their bid proposal. The Department of Public Works will use this information to maintain and update a "Bidder's List" to assist in the overall annual Disadvantaged Business Enterprise (DBE) availability goal setting process required for Federal-aid projects. This information is also being made available to other local agencies for the same purpose. *To the extent permitted by law, all information submitted will be held in strict confidence and will not be shared without your consent except as noted above.*

Contractor: ☐ Prime Contractor ☐ Subcontractor ☐ Supplier ☐ Other: _____

Firm Name: _____ Phone: _____

Business Address: _____ Fax: _____

_____

License No.
and Classification _____ Years in Business: _____

Contact Person: _____

Is the firm currently certified as a DBE by Caltrans? ☐ No ☐ Yes Cert. Number: _____

Gross Annual Receipts for last year:
☐ less than $1 million ☐ less than $5 million ☐ less than $10 million
☐ less than $15 million ☐ more than $15 million

Type of work/ services/ materials provided for this job:
☐ Contractor ☐ Supplier ☐ Manufacturer ☐ Trucking ☐ Broker
☐ Other (describe): _____

Contractor Specialty for this job:
☐ Roadway Construction (including signing, paving, and concrete) (237310)
☐ Roadway Painting/Striping (237310)
☐ Highway Lighting & Signal Installation (238210)
☐ Bridge Construction (237310)
☐ Tunnel Construction (237990)
☐ Water, Sewer, & Pipeline Construction (237110)
☐ Power & Communication Transmission Line (including conduit construction) (237130)
☐ Landscaping (561730)
☐ Irrigation (237110)
☐ Other Heavy Construction (including parks, reclamation, reservoir, water & sewer treatment facilities) (237990)
☐ Masonry (including retaining walls and foundations) (238140)
☐ Concrete Retaining Walls (238110)
☐ Building Construction (236210/236220)
☐ Other (describe): _____

- Copy sheet as needed
- None of the information requested on this form is material to the County's determination of which Bidder's Bid is the lowest responsive bid.

RETURN THIS FORM WITH YOUR BID PROPOSAL

DESIGNATION OF SUBCONTRACTORS FORM

In compliance with the provisions of Sections 4100-4113 of the Public Contract Code of the State of California, and any amendments thereto, the undersigned bidder sets forth the following:

a. The name and location of the place of business of each subcontractor who will perform work or labor, or render service to the undersigned Prime Contractor in or about the construction of the work or improvement, or a subcontractor licensed by the State of California who, under subcontract to the Prime Contractor, specially fabricates and installs a portion of the work or improvement according to detailed drawings contained in the plans and specifications, in an amount in excess of one-half of one percent of the undersigned Prime Contractor's total bid or in the case of bids for the construction of streets and highways, including bridges, in excess of one-half of one percent or ten thousand dollars ($10,000), whichever is greater.*

1. The portion of the work which will be done by each such subcontractor. Only one subcontractor shall be listed for each such portion. If the subcontractor is not performing all of the work under the bid item number(s) listed for that subcontractor, the bidder shall set forth the portion of the work relating to said bid item number(s) that will be done by the subcontractor.

Bid Schedule Item No.	Description of Portion of Work (if applicable)	Subcontractor	License No.	Address	Percent of Total Bid Price

By:_____

(Bidder's Signature/Printed Name and Title/Company Name)

*NOTE: When there is a failure to list a subcontractor, as required, the law provides that the Contractor agrees to do the work with his or her own forces. In such case, bidder must be authorized to perform said work. Any bid not complying with the provisions hereof may be rejected.

RETURN THIS FORM WITH YOUR BID PROPOSAL

BIDDER'S NON-COLLUSION DECLARATION (STATE FORM)

Bidder hereby states, under penalty of perjury, that the bid is not made in the interest of, or on behalf of, any undisclosed person, partnership, company, association, organization, or corporation; that the bid is genuine and not collusive or sham; that the bidder has not directly or indirectly induced or solicited any other bidder to put in a false or sham bid, and has not directly or indirectly colluded, conspired, connived, or agreed with any bidder or anyone else to put in a sham bid, or that anyone shall refrain from bidding; that the bidder has not in any manner, directly or indirectly, sought by agreement, communication, or conference with anyone to fix the bid price of the bidder or any other bidder, or to fix any overhead, profit, or cost element of the bid price, or of that of any other bidder, or to secure any advantage against the public body awarding the contract of anyone interested in the proposed contract; that all statements contained in the bid are true; and, further, that the bidder has not, directly or indirectly, submitted his or her bid price or any breakdown thereof, or the contents thereof, or divulged information or data relative thereto, or paid, and will not pay, any fee to any corporation, partnership, company association, organization, bid depository, or to any member or agent thereof to effectuate a collusive or sham bid.

I declare under penalty of perjury under the laws of the State of California that the foregoing is true and correct.

_____
(Name of Company)

By: _____

_____
Printed Name

_____
Title

Date: _____

RETURN THIS FORM WITH YOUR BID PROPOSAL

BIDDER'S BOND

KNOW ALL BY THESE PRESENTS:

That we, _____

_____

as Principal, and _____

_____,

as Surety, are held and firmly bound unto the County of San Luis Obispo, State of California (hereinafter called "County") in the penal sum of Ten Percent (10%) of the total aggregate amount of the bid of the Principal above named, submitted by said Principal to the County for the work described below, for the payment of which sum in lawful money of the United States, well and truly to be made, we bind ourselves, our heirs, executors, administrators and successors, jointly and severally, firmly by these presents. In no case shall the liability of the Surety hereunder exceed the sum of _____

_____ ($_____).

THE CONDITION OF THIS OBLIGATION IS SUCH,

That whereas a bid to County for certain construction specifically described as follows, for which bids are to be opened on _____, 20____, has been submitted by Principal to County for:

2013-14 ASPHALT OVERLAY
SOUTH BAY BOULEVARD
FROM LOS OSOS VALLEY ROAD
TO SANTA YSABEL AVENUE
LOS OSOS, CA
CONTRACT NO. 300504

NOW, THEREFORE, if the aforesaid Principal shall not withdraw said bid after the time fixed in the Notice to Bidders for the opening of the same, and shall within ten (10) calendar days, not including Saturdays, Sundays, and legal holidays, after receipt of written notice that the contract has been awarded to him/her, enter into a written contract with County, in the prescribed form, in accordance with the bid as accepted, and file with the County the certificates of insurance as stipulated in Article 7 of the Agreement and the two bonds, one to guarantee faithful performance and the other to guarantee payment for labor and materials, as required by law, then this obligation shall be null and void; otherwise, it shall remain in full force and effect, and the penal sum guaranteed by this bond shall be forfeited to the County.

Surety, for value received, hereby stipulates and agrees that no change, extension of time, alteration or addition to the terms of said contract or to the work to be performed thereunder or the specifications accompanying the same shall in any manner affect its obligations on this bond, and it does hereby waive notice of any such change, extension, alteration, or addition.

In the event suit is brought upon said bond by County and judgment is recovered, the Surety shall pay all costs incurred by County in such suit, including a reasonable attorney's fee to be fixed by the court. Death of the Principal shall not relieve Surety of its obligations hereunder.

IN WITNESS WHEREOF, we have hereunto set our hands and seals on this _____ day of_____, 20____.

_____ (Seal)

_____ (Seal)

_____ (Seal)
Principal

_____ (Seal)

_____ (Seal)

_____ (Seal)
Surety

_____

_____
Address

NOTE:

Signatures of those executing for Surety must be properly acknowledged.

COUNTY OF SAN LUIS OBISPO
DEPARTMENT OF PUBLIC WORKS AND TRANSPORTATION

CONTRACT AGREEMENT

FOR

2013-14 ASPHALT OVERLAY
SOUTH BAY BOULEVARD
FROM LOS OSOS VALLEY ROAD
TO SANTA YSABEL AVENUE
LOS OSOS, CA
CONTRACT NO. 300504

COUNTY OF SAN LUIS OBISPO

AGREEMENT

THIS AGREEMENT, made and entered into this _____ day of _____, 20_____, between the County of San Luis Obispo, a political subdivision and county of the State of California, party of the first part, hereinafter called "County" and _____ _____ the party of the second part, hereinafter called "Contractor".

WITNESSETH, that for and in consideration of the mutual covenants and agreements hereinafter contained, the parties hereto agree as follows:

ARTICLE 1 – WORK

That the Contractor will, at its own proper cost and expense, do all the work and furnish all the equipment and materials necessary to construct and complete in good and workmanlike manner to the satisfaction of the Board of Supervisors of said County, for

2013-14 ASPHALT OVERLAY
SOUTH BAY BOULEVARD
FROM LOS OSOS VALLEY ROAD
TO SANTA YSABEL AVENUE
LOS OSOS, CA
CONTRACT NO. 300504

all in strict accordance with the Contract Documents, including without limitation, the Project Plans, the Standard Specifications of the State of California, Department of Transportation, dated May 2006 (hereinafter called, "Standard Specifications"), the Standard Plans of the State of California, Department of Transportation, dated May 2006 (hereinafter called, "Standard Plans"), and the Special Provisions therefor, on file in the Department of Public Works and Transportation and the Office of the Clerk of the Board of Supervisors of the County of San Luis Obispo, State of California.

ARTICLE 2 – CONTRACT

This Agreement, together with the Notice and Instructions to Bidders, Bid Proposal and Forms, Standard Specifications, Standard Plans, the Special Provisions, including without limitation the Project Plans incorporated therein, and all addenda thereto, form the contract, and said documents by this reference become as fully a part of this Agreement as if set forth in full and are herein sometimes referred to as "Contract" or as "Contract Documents". The terms set forth below, when utilized in said documents, shall mean as follows:

> PUBLIC WORKS DIRECTOR: Means the Director of Public Works and Transportation (hereinafter, also the Department of Public Works) of the County of San Luis Obispo, State of California, acting either directly or through properly authorized agent(s), acting within the scope of the particular duties delegated to them, including registered engineers employed by the Department of Public Works and Transportation.

COUNTY CLERK: Means the Clerk of the Board of Supervisors of the County of San Luis Obispo, State of California.

ARTICLE 3 – CONTRACT TIMES

The Contractor shall begin work within ten (10) calendar days, not including Saturdays, Sundays, or legal holidays, from the date of receipt of the County's Notice to Contractor to Proceed, and the work to be accomplished under this contract shall be completed within the time limit provided in Section 4, "Prosecution and Progress of the Work", of the Special Provisions. Attention is directed to the provisions of said Section 4, "Prosecution and Progress of the Work", of the Special Provisions for the amount of liquidated damages.

ARTICLE 4 – CONTRACT PRICE

The total Contract price is the amount of the Contractor's bid as set forth in the award of the Contract approved by the County's Board of Supervisors. The Contractor will receive and accept and the County will pay the prices specified in the attached Bid Proposal, which is incorporated herein by reference, as full compensation for furnishing all labor, materials, and equipment for doing all the work contemplated and embraced in this Agreement. To the extent permitted by law, the Contractor assumes during the progress of the work and before its acceptance, any and all loss or damage arising out of the nature of the work aforesaid or from the action of the elements, or from any unforeseen difficulties or obstructions which may arise or be encountered in the prosecution of the work until its acceptance by the County; and assumes any and all expenses incurred by or in consequence of the suspension or discontinuance of work, for well and faithfully completing the work, and the whole thereof, in the manner and to the requirements of the Plans, Special Provisions, Standard Specifications, Standard Plans, and the Public Works Director.

ARTICLE 5 – SUBCONTRACTING

The Contractor's attention is directed to the provisions of Section 2-1.02, "Required Listing of Proposed Subcontractors," of the Special Provisions and the requirements contained therein.

Additionally, the Contractor's attention is directed to the provisions of the "Subletting and Subcontracting Fair Practices Act" set forth in Sections 4100-4114 of the Public Contract Code.

ARTICLE 6

The Contractor agrees that the Public Works Director shall decide as to the meaning of the Standard Specifications, Standard Plans, and Special Provisions for the work, including without limitation the Project Plans incorporated therein, where the same may be found to be obscure or in dispute and the decision shall be final. The Public Works Director shall have the right to correct any errors or omissions therein when such corrections are necessary to the proper fulfillment of the intention of the Special Provisions, Standard Specifications and Standard Plans; the action of such corrections is to take effect from the time said Public Works Director gives notice thereof to the Contractor.

ARTICLE 7 - INSURANCE REQUIREMENTS

Contractor, at its sole cost, shall purchase and maintain the insurance policies set forth below on all of its operations under this Agreement. All of the insurance companies providing insurance for Contractor shall have, and provide evidence of, an A.M. Best & Co. rating of A:VII or above, unless exception is granted by Risk Manager. Further, all policies shall be maintained for the full term of this Agreement and related warranty period if applicable.

7.01 SCOPE AND LIMITS OF REQUIRED INSURANCE POLICIES

A. COMMERCIAL GENERAL LIABILITY

Policy shall include coverage at least as broad as set forth in Insurance Services Office Commercial General Liability Coverage (CG 00 01) with policy limits of not less than $2 million dollars combined single limit per occurrence. Policy shall be endorsed with the following specific language or contain equivalent language in the policy:

i.) The County of San Luis Obispo, its officers, officials, employees, and volunteers are named as an additional insured for all liability arising out of the operations by or on behalf of the named insured in the performance of this Agreement. General liability coverage can be provided in the form of an endorsement to the Contractor's insurance as least as broad as ISO Form CG 20 10 11 85 or if not available, through the addition of both CG 20 10 and CG 20 37 (if a later edition is used).

ii.) The insurance provided herein shall be considered primary coverage to the County of San Luis Obispo with respect to any insurance or self insured retention maintained by the County. Further, the County's insurance shall be considered excess insurance only and shall not be called upon to contribute to this insurance.

iii.) The policy shall not be cancelled or materially changed without first giving thirty days prior written notice to the County of San Luis Obispo, Department of Public Works.

B. BUSINESS AUTOMOBILE POLICY

Policy shall include coverage at least as broad as set forth in the liability section of Insurance Services Office Business Auto Coverage (CA 00 01) with policy limits of no less than $1 million dollars combined single limit for each occurrence. Said insurance shall include coverage for owned, non-owned, and hired vehicles. Policy shall be endorsed with the following specific language or contain equivalent language in the policy:

i.) The County of San Luis Obispo, its officers, officials, employees, and volunteers are named as an additional insured for all liability arising out of the operations by or on behalf of the named insured in the performance of this Agreement.

ii.) The policy shall not be cancelled or materially changed without first giving thirty days prior written notice to the County of San Luis Obispo, Department of Public Works.

C. WORKERS' COMPENSATION / EMPLOYERS' LIABILITY INSURANCE

i. Workers' Compensation: policy shall provide statutory limits as required by State of California. Policy shall be endorsed with the following specific language or contain equivalent language in the policy:

a. Contractor and its insurer shall waive all rights of subrogation against the County, its officers and employees for workers' compensation losses arising out of this Agreement.

b. The policy shall not be cancelled or materially changed without first giving thirty days prior written notice to the County of San Luis Obispo, Department of Public Works.

ii. Employer's Liability: policy shall provide $1 million dollars per accident for bodily injury or disease.

If the Contractor maintains higher limits than the minimum shown above, the County requires and shall be entitled to coverage for the higher limits maintained by the Contractor.

7.02 DEDUCTIBLES AND SELF-INSURANCE RETENTIONS

All deductibles and/or self-insured retentions which apply to the insurance policies required herein will be declared in writing and approved by the County prior to commencement of this Agreement.

7.03 DOCUMENTATION

Prior to commencement of work and annually thereafter for the term of this Agreement, Contractor will provide to the County of San Luis Obispo, Department of Public Works, Room 207, County Government Center, CA 93408, Attention Design Engineer, Contract No. 300504, properly executed certificates of insurance clearly evidencing the coverage, limits, and endorsements specified in this Agreement. Further, at the County's request, the Contractor shall provide certified copies of the insurance policies within thirty days of request.

Failure of the County to demand such certificates or other evidence of Contractor's full compliance with these insurance requirements or failure of the County to identify a deficiency in compliance from the evidence provided shall not be construed as a waiver of Contractor's obligation to maintain such insurance.

7.04 ABSENCE OF INSURANCE COVERAGE

County may direct Contractor to immediately cease all activities with respect to this Agreement if it determines that Contractor fails to carry, in full force and effect, all insurance

policies with coverage levels at or above the limits specified in this Agreement. Any delays or expense caused due to stopping of work and change of insurance shall be considered Contractor's delay and expense.

7.05 SPECIAL RISKS OR CIRCUMSTANCES

The County reserves the right to modify these requirements, including limits, based on the nature of the risk, prior experience, insurer, coverage, or other special circumstances.

ARTICLE 8 – INDEMNIFICATION

Contractor shall defend, indemnify, and hold harmless the County, its officers, employees, and volunteers from all claims, demands, damages, costs, expenses, judgments, attorney fees, liabilities, or other losses (hereafter, collectively "claims") that may be asserted by any person or entity, and that arise out of or relate in any way to any acts or omissions relating to the performance of any duty, obligation, or work hereunder. The obligation to indemnify shall be effective and shall extend to all such claims, in their entirety, even when such claims arise from the comparative negligence of the County, its officers or employees. However, this indemnity will not extend to any claims arising out of the sole negligence or willful misconduct of the County, its officers or employees.

The preceding paragraph applies to any theory of recovery relating to said act or omission by the Contractor, or its agents, employees, or other independent contractors directly responsible to Contractor, including, but not limited to the following:

1. Violation of statute.

2. Professional malpractice.

3. Willful, intentional or other wrongful acts, or failures to act.

4. Negligence or recklessness.

5. Furnishing of defective or dangerous products.

6. Broad Form Property Damage (Including Completed Operations).

7. Premises Liability.

8. Strict Liability.

9. Inverse condemnation.

10. Violation of civil rights

11. Violation of any federal or state stature, regulation, or ruling resulting in a determination by the Internal Revenue Service, California Franchise Tax Board, or any other California entity responsible for collecting payroll taxes, when the Contractor is not an independent contractor.

Nothing contained in the foregoing indemnity provisions shall be construed to require the Contractor to indemnify the County, against any responsibility or liability in contravention of Civil Code 2782.

It is the intent of the parties to provide the County the fullest indemnification, defense, and "hold harmless" rights allowed under the law. If any word(s) contained herein are deemed by a court to be in contravention of applicable law, said word(s) shall be severed from this contract and the remaining language shall be given full force and effect.

All of the preceding indemnification rights granted the County above shall survive any termination of this agreement.

ARTICLE 9 – FINAL PAYMENT

It is mutually agreed between the parties hereto, that no certificate given or payments made under this contract, except the final payment, shall be evidence of the performance of this contract, either wholly or in part, against any claim of the Contractor. Final payment for the work performed under this contract shall not be made until the lapse of thirty-five (35) calendar days after the notice of completion of said work has been filed for record and no payment shall be construed to be an acceptance of any defective work or improper materials. The Contractor further agrees that acceptance by the Contractor of the final payment due under this contract, and the adjustment and payment of his/her bill rendered for any work done in accordance with any amendments of this Contract, shall be and shall operate as a release to the County of San Luis Obispo from any and all claims or liabilities on account of work performed under this Contract except claims or liabilities for which written notice of claim or protest has been filed with the Public Works Director. Besides guarantees required elsewhere, the Contractor shall and does hereby guarantee all workmanship and material for a period of one year from and after both the date of acceptance of the work and the recordation of the notice of completion by the County and shall repair or replace any or all work and material, together with any other portions of the work which may be displaced in so doing, that in the opinion of the County is or becomes defective during the period of said guarantee without expense whatsoever to the County.

ARTICLE 10 – CONTRACTOR'S REPRESENTATIONS

The Contractor hereby declares that he/she has read the Contract Documents pertaining to the work to be accomplished hereunder, has carefully examined the plans and detail drawings of the work to be performed and fully understands the intent and meaning of the same.

It is further stipulated and agreed that the Contractor shall keep himself/herself fully informed of all laws, ordinances, and regulations which do or may affect the conduct of the work, the materials used therein or persons engaged or employed thereupon and all such orders of bodies and tribunals having any jurisdiction over the same. If it be found that the Special Provisions or Standard Specifications for the work conflict with any such law, ordinance or regulation the Contractor shall immediately report same to the Public Works Director in writing. The Contractor shall at all times observe and comply with and shall cause all his/her agents, employees, and independent contractors hired by the Contractor to observe and comply with all such existing and future laws, ordinances, regulations, or decrees.

ARTICLE 11 – APPRENTICES

Attention is directed to the provisions in Sections 1777.5, 1777.6, and 1777.7 of the Labor Code concerning the employment of apprentices by the Contractor or any subcontractor.

The Contractor and any subcontractor shall comply with the requirements of Sections 1777.5, 1777.6, and 1777.7 of the Labor Code in the employment of apprentices.

To insure compliance and complete understanding of the law relating to apprentices, and specifically the required ratio thereunder, each contractor or subcontractor should, where some question exists, contact the Division of Apprenticeship Standards, 455 Golden Gate Avenue, San Francisco, California, or one of its branch offices prior to commencement of work on this contract. Responsibility for compliance with said Labor Code Sections lies with the prime contractor.

ARTICLE 12 – PAYROLL RECORDS

Attention is directed to the provisions in Section 1776 of the Labor Code concerning Contractor and subcontractor payroll records.

The Contractor and any subcontractor shall comply with the requirements of Section 1776 of the Labor Code.

ARTICLE 13 – EQUAL EMPLOYMENT OPPORTUNITY

During the performance of this contract, Contractor agrees to comply with all of the Equal Employment Opportunity provisions of Executive Order No. 11246 of September 24, 1965, as amended by Executive Order 11375 of October 13, 1967, and as supplemented in Department of Labor regulations (41 CFR Chapter 60), including the following:

1. The Contractor will not discriminate against any employee or applicant for employment because of race, color, religion, sex, or national origin. The Contractor will take affirmative action to ensure that applicants are employed, and that employees are treated during employment without regard to their race, color, religion, sex, or national origin. Such action shall include, but not be limited to the following: employment, upgrading, demotion or transfer, recruitment or recruitment advertising, layoffs or termination, rates of pay or other forms of compensation, and selection for training, including apprenticeship. The Contractor agrees to post in conspicuous places, available to employees and applicants for employment, notices to be provided by the Department of Public Works setting forth the provisions of this nondiscrimination clause.

2. The Contractor will, in all solicitations or advertisements for employees placed by or on behalf of the Contractor, state that all qualified applicants will receive consideration for employment without regard to race, color, religion, sex, or national origin.

3. The Contractor will send to each labor union or representative of workers with which he/she has a collective bargaining agreement or other contract or understanding, a notice, to be provided by the Department of Public Works, advising the said labor union or worker's representative of the Contractor's commitments under this Article 14 and shall post copies of the Notice in conspicuous places available to employees and applicants for employment.

4. The Contractor will comply with all provisions of Executive Order 11246 of September 24, 1965, and of the rules, regulations (41 CFR, Part 60) and relevant orders of the Secretary of Labor.

5. The Contractor will furnish all information and reports required by Executive Order 11246 of September 24, 1965, and by rules, regulations, and orders of the Secretary of Labor, or pursuant thereto, and will permit access to his books, records, and accounts by the County of San Luis Obispo and the Secretary of Labor for purposes of investigation to ascertain compliance with such rules, regulations, and orders.

6. In the event of the Contractor's noncompliance with the nondiscrimination clauses of this contract or with any of the said rules, regulations or orders, this contract may be cancelled, terminated or suspended in whole or in part and the Contractor may be declared ineligible for further government contracts or federally assisted construction contracts in accordance with procedures authorized in Executive Order 11246 of September 24, 1965, and such other sanctions may be imposed and remedies invoked as provided in Executive Order 11246 of September 24, 1965, or by rule, regulation or order of the Secretary of Labor, or as otherwise provided by law.

7. The Contractor will include the provisions of this Article in every subcontract or purchase order unless exempted by rules, regulations, or orders of the Secretary of Labor issued pursuant to Section 204 of Executive Order 11246 of September 24, 1965, so that such provisions will be binding upon each subcontractor or vendor. The Contractor will take such action with respect to any subcontract or purchase order as the Public Works Director or the Secretary of Labor may direct as a means of enforcing such provisions including sanctions for noncompliance: provided, however, that in the event a contractor becomes involved in, or is threatened with litigation with a subcontractor or vendor as a result of such direction by the Secretary of Labor, the Contractor may request the United States to enter into such litigation to protect the interests of the United States.

ARTICLE 14 - SAFETY

All work conducted by the Contractor and/or subcontractors in the execution of this contract shall be in accordance with current CAL OSHA requirements. Full compensation for compliance with the provisions of this Article shall be considered as included in the other items of work and no additional compensation will be allowed therefor.

ARTICLE 15 – BONDS

Contractor agrees that the Payment Bond and Performance Bond attached to this Agreement are for reference purposes only, and shall not be considered a part of this Agreement or any other Contract Document. Contractor further agrees that said bonds are separate obligations of the Contractor and its surety, and that any attorney's fee provision contained in any payment bond or performance bond shall not apply to any legal action between Contractor and County to enforce any provision of the Contract Documents.

ARTICLE 16 – ATTORNEYS FEES

No provisions of the Contract Documents provide either the Contractor or the County the right to be awarded any attorney's fees and/or costs under Civil Code section 1717 in any legal action brought by either party to enforce any provision of the Contract Documents against the other party. The parties agree that any references to attorney's fees in language describing indemnification obligations do not constitute a contractual provision that would provide either the Contractor or the County the right to be awarded any attorney's fees and/or costs under Civil Code section 1717 in any legal action brought by either party to enforce any provision of the Contract Documents against the other party. Any other language in the Contract Documents providing for a recovery of attorney's fees shall be strictly construed as not including the recovery of any attorney's fees incurred by either Contractor or County in any legal action brought by either party to enforce any provision of the Contract Documents against the other party.

The parties agree that the Contract Documents contain no provisions that would allow either the Contractor or the County to be awarded attorney's fees and/or costs under Civil Code section 1717. Nothing in this Article affects any right by Contractor or County to recover attorney's fees or costs by operation of any law other than Civil Code section 1717.

In the event of any conflict between language in this Article and any other language in the Contract Documents, the language in this Article shall prevail.

IN WITNESS WHEREOF, the parties to these presents have hereunto set their hands the year and date first above written, being authorized thereto.

COUNTY OF SAN LUIS OBISPO

By:_____
Chairperson of the Board of Supervisors

Date:_____

ATTEST:
CLERK OF THE BOARD OF SUPERVISORS

By:_____
Deputy Clerk

Date:_____

APPROVAL RECOMMENDED
PAAVO OGREN

By: Paavo Ogren
Director of Public Works

Date: 5/1/2014

APPROVED AS TO FORM AND LEGAL EFFECT:

RITA L. NEAL
County Counsel

By: Rita L. Neal

Date: 4/24/14

CONTRACTOR

_____

By:_____

Date:_____

_____
Printed Name and Title
(If Contractor is a corporation, a partnership, or a joint venture, attach evidence of authority to sign)

By:_____

_____
(Printed Name and Title)

Date:_____

Address for giving notices:

_____

_____

_____

PERFORMANCE BOND

KNOW ALL BY THESE PRESENTS: That

WHEREAS, the Board of Supervisors of the County of San Luis Obispo, State of California, has awarded to _____

_____

(hereinafter designated as "Principal") a contract for _____

_____

_____

_____; and

WHEREAS, said Principal is required under the terms of said contract to furnish a bond for the faithful performance of said contract;

NOW, THEREFORE, we, the Principal and _____

_____, as Surety, are held and firmly bound unto the County of San Luis Obispo, (hereinafter called "County"), in the penal sum of

_____

($_____), lawful money of the United States, for the payment of which sum well and truly to be made, we bind ourselves, our heirs, executors, administrators and successors, jointly and severally, firmly by these presents.

The condition of this obligation is such that if the above bounded Principal, his or its heirs, executors, administrators, successors or assigns, shall in all things stand to and abide by, and well and truly keep and perform the covenants, conditions and agreements in the said contract and any alteration thereof made as therein provided, on his/her or their part, to be kept and performed at the time and in the manner therein specified, and in all respects according to their true intent and

meaning, and shall indemnify and save harmless County, its officers, agents, and employees, as therein stipulated, then this obligation shall become null and void; otherwise it shall be and remain in full force virtue and effect.

And the said Surety, for value received, hereby stipulates and agrees that no change, extension of time, alteration or addition to the terms of the contract or to the work to be performed thereunder or the specifications accompanying the same shall in any manner affect its obligations on this bond, and it does hereby waive notice of any such change, extension of time, alteration, or additions to the terms of the contract or to the work or to the specifications.

In the event suit is brought upon this bond by County and judgment is recovered, Surety shall pay all costs incurred by County in such suit, including a reasonable attorney's fee to be fixed by the Court.

Death of the Principal shall not relieve Surety of its obligations hereunder.

IN WITNESS WHEREOF, one identical counterpart of this instrument, which shall for all purposes be deemed an original thereof, has been duly executed by Principal and Surety above named, on the _____ day of_____, 20_____.

_____ (Seal)

_____ (Seal)

_____ (Seal)
Principal

_____ (Seal)

_____ (Seal)

_____ (Seal)
Surety

_____

_____
Address

NOTE:

Signatures of those executing for Surety must be properly acknowledged.

PAYMENT BOND

KNOW ALL BY THESE PRESENTS:

WHEREAS, the Board of Supervisors of the County of San Luis Obispo, State of California, and _____

_____ (hereinafter designated as "Principal") have entered into an agreement for _____

_____

_____

_____

which said Agreement, and all of the Contract Documents attached to or forming a part of said Agreement, are hereby referred to and made a part hereof; and

WHEREAS, pursuant to law, the Principal is required before entering upon the performance of the Work, to file a good and sufficient bond with the body by whom the contract is awarded, to secure claims to which reference is made in Sections 3247 through 3252, inclusive, of the Civil Code of California, and Sections 3181, 3110, 3111 and 3112 of the Civil Code of California,

NOW, THEREFORE, said Principal and the undersigned _____

_____

as corporate surety, are held and firmly bound unto the County of San Luis Obispo, and unto all laborers, materialmen, and other persons referred to in said statutes in the sum of

_____

($_____), lawful money of the United States for the payment of which sum well and truly made, we bind ourselves, our heirs, executors, administrators, successors, or assigns, jointly and severally by these presents.

The condition of this obligation is such that if the said Principal, his/her or its heirs, executors, administrators, successors or assigns, or subcontractors, shall fail to pay any of the persons named in Civil Code Section 3181, or amounts due under the Unemployment Insurance Code with respect to work or labor performed by any such claimant, or any amounts required to be deducted, withheld, and paid over to the Employment Development Department from the wages of employees of the Principal and his/her subcontractors pursuant to Section 13020 of the Unemployment Insurance Code, with respect to such work and labor, that the surety herein will pay for the same in an amount not exceeding the sum specified in this bond, otherwise the above obligation shall be void. In case suit is brought upon this bond, the said surety will pay a reasonable attorney's fee to be fixed by the court.

This bond shall inure to the benefit of any of the persons named in Civil Code Section 3181 as to give a right of action to such persons or their assigns in any suit brought upon this bond.

Should the condition of this bond be fully performed, then this obligation shall become null and void, otherwise it shall be and remain in full force, virtue, and effect.

And the said Surety, for value received, hereby stipulates and agrees that no change, extension of time, alteration or addition to the terms of the contract or to the work to be performed thereunder or the specifications accompanying the same shall in any manner affect its obligations on this bond, and it does hereby waive notice of any such change, extension of time, alteration, or additions to the terms of the contract or to the work or to the specifications.

Death of the Principal shall not relieve Surety of its obligations hereunder.

IN WITNESS WHEREOF one identical counterpart of this instrument, which shall for all purposes be deemed an original thereof, has been duly executed by the Principal and Surety above named, on the _____ day of_____, 20____.

_____ (Seal)

_____ (Seal)

_____ (Seal)
Principal

_____ (Seal)

_____ (Seal)

_____ (Seal)
Surety

_____

_____
Address

NOTE:
Signatures of those executing for Surety must be properly acknowledged.

COUNTY OF SAN LUIS OBISPO
DEPARTMENT OF PUBLIC WORKS AND TRANSPORTATION

SPECIAL PROVISIONS

FOR

2013-14 ASPHALT OVERLAY
SOUTH BAY BOULEVARD
FROM LOS OSOS VALLEY ROAD
TO SANTA YSABEL AVENUE
LOS OSOS, CA
CONTRACT NO. 300504

THIS PAGE LEFT BLANK INTENTIONALLY

CONTRACT NO. 300504

The Special Provisions contained herein have been prepared by or under the direction of the following registered engineer(s):

PREPARED BY:

PROJECT ENGINEER — DATE 4-30-14

REGISTERED PROFESSIONAL ENGINEER STEVEN R. JONES C 65124 CIVIL STATE OF CALIFORNIA

DESIGN ENGINEER — DATE 4/30/14

REGISTERED PROFESSIONAL ENGINEER JEFF B. WERST C 47971 EXP 12-31-15 CIVIL STATE OF CALIFORNIA

RECOMMENDED FOR APPROVAL AND ADVERTISING BY:

Dave Flynn

DEPUTY PUBLIC WORKS DIRECTOR — DATE 5/1/14

APPROVED BY:

Peavo Ogan

PUBLIC WORKS DIRECTOR — DATE 5/1/14

THIS PAGE LEFT BLANK INTENTIONALLY

SECTION 1. SPECIFICATIONS AND PLANS

1-1.01 SPECIFICATIONS AND PLANS

The work embraced herein shall be done in accordance with the Standard Specifications of the State of California, Department of Transportation, dated May 2006 (hereinafter called, "Standard Specifications"), the Standard Plans of the State of California, Department of Transportation, dated May 2006 (hereinafter called, "Standard Plans"), insofar as they may apply and in accordance with these Contract Documents. Wherever State Agencies, Departments, or Officers are referred to in the above mentioned Standard Specifications and Standard Plans, the comparable County of San Luis Obispo Agency, Department, or Officer having jurisdiction shall be meant thereby for the purpose of these Contract Documents.

The County hereby elects under Public Contract Code § 20396 to have said applicable provisions of the Standard Specifications and Standard Plans referenced above, including those provisions modified by these Special Provisions, governed by the State Contract Act to the extent, and only to the extent, one or both of the following conditions is satisfied: (1) the applicable provisions of the Standard Specifications or Standard Plans expressly refer to the State Contract Act; or (2) the County would lack the authority to implement the applicable provisions of the Standard Specifications or Standard Plans absent the County's election to have the County's implementation of the provisions governed by the State Contract Act.

No amendment by the Department of Transportation to the Standard Specifications shall apply to these Contract Documents unless the amendment is expressly set forth in these Special Provisions.

In case of conflict between the Standard Specifications and the contract Special Provisions herein, the Special Provisions shall take precedence over such conflicting portions.

THIS PAGE LEFT BLANK INTENTIONALLY

SECTION 2. PROPOSAL REQUIREMENTS AND CONDITIONS

2-1.01 PROPOSAL REQUIREMENTS AND CONDITIONS

Attention is directed to the provisions in Section 2, "Proposal Requirements and Conditions," of the Standard Specifications and these Special Provisions for the requirements and conditions which the bidder must observe in preparation and the submission of their bid.

The bidder's bond shall conform to the bond form in the section titled "Bid Proposal and Forms" of the Contract Documents and shall be properly filled out and executed. The bidder's bond form included in the Contract Documents may be used.

The following provisions for Section 2, "Proposal Requirements and Conditions," of the Standard Specifications are hereby modified as set forth hereafter.

Section 2-1.03, "Examination of Plans, Specifications, Contract, and Site of Work," of the Standard Specifications is hereby amended by modifying the first sentence of the 5th paragraph to read: "Inspection of such records may be made at the Department of Public Works and Transportation of the County of San Luis Obispo."

Section 2-1.05, "Proposal Forms" of the Standard Specifications, is hereby amended by substituting the words, "General and Special Provisions" for the words, "Proposal and Contract" in the first sentence of the 2nd paragraph and by substituting the words, "Notice to Bidders" for the words, "Notice to Contractors" in the first sentence of the 3rd paragraph. The 4th paragraph is hereby amended to read: "Proposal forms shall be obtained from the Department of Public Works and Transportation, County Government Center, San Luis Obispo, CA. 93408." The 5th paragraph is hereby deleted.

Section 2-1.07, "Proposal Guaranty" of the Standard Specifications, is hereby amended by substituting the words, "made payable to the County of San Luis Obispo" for the words, "made payable to the Director of Transportation" in the first paragraph. The 2nd paragraph is hereby amended by adding the following sentence, "The provisions of the Public Contract Code § 10181 are applicable to this contract." The first sentence of the last paragraph is hereby amended by substituting the words, "General and Special Provisions" for the words, "Proposal and Contract". The last sentence of the last paragraph is hereby deleted.

Section 2-1.08, "Withdrawal of Proposals" of the Standard Specifications, is hereby amended by substituting the words, "Office of the Clerk of the Board of Supervisors of the County of San Luis Obispo" for the words, "Office Engineer, Division of Construction" in the first sentence. The last sentence is hereby amended by modifying it to read: "Any bid received at the Office of the Clerk of the Board of Supervisors of the County of San Luis Obispo after the date and

time specified in the Notice to Bidders shall not be considered and shall be returned to the bidder unopened nor may any bid be withdrawn after the time fixed in the public notice for the opening of bids."

Section 2-1.105, "Previous Disqualification, Removal or Other Prevention of Bidding", of the Standard Specifications, is hereby amended by deleting the first paragraph.

Section 2-1.108, "Compliance with Orders of the National Labor Relations Board", of the Standard Specifications, is hereby amended by modifying the last paragraph to read: "The statement required by said Section 10232 is included in the section titled "Bid Proposal and Forms" of the Contract Documents."

Section 2-1.11, "Ineligibility to Contract", of the Standard Specifications is hereby amended by modifying the last paragraph to read: "A form for the statement required by Section 10285.1 is included in the section titled "Bid Proposal and Forms" of the Contract Documents."

2-1.02 REQUIRED LISTING OF PROPOSED SUBCONTRACTORS

The designated subcontractors listed in the bidder's proposal shall list therein the name and address of all subcontractors to whom the bidder proposes to subcontract portions of the work in an amount in excess of 1/2 of one percent of the total bid, or in the case of bids for the construction of streets and highways, including bridges, in excess of 1/2 of the one percent or $10,000, whichever is greater, in accordance with the Subletting and Subcontracting Fair Practices Act commencing with Section 4100 of the Public Contract Code. The bidder's attention is invited to other provisions of said Act related to the imposition of penalties for a failure to observe its provisions by using unauthorized subcontractors or by making unauthorized substitutions.

The "DESIGNATION OF SUBCONTRACTORS" form for the designation of subcontractors, as required herein, is included in the section titled "Bid Proposal and Forms" of the Contract Documents and shall be completely filled out, signed by the bidder, and submitted with the bid proposal.

SECTION 3. AWARD AND EXECUTION OF CONTRACT

3-1.01 AWARD OF CONTRACT

Attention is directed to the provisions of Section 3, "Award and Execution of Contract," of the Standard Specifications and these Special Provisions for the requirements and conditions concerning award and execution of the contract.

The award of contract, if it be awarded, will be to the lowest responsible bidder whose proposal complies with all of the requirements prescribed. Such award, if made, will be made within 45 calendar days after the opening of proposals.

If the lowest responsible bidder refuses or fails to execute the contract, the Board of Supervisors of the County of San Luis Obispo may award the contract to the second lowest responsible bidder. Such award, if made, will be made within 75 calendar days after the opening of proposals. If the second lowest responsible bidder refuses or fails to execute the contract, the Board of Supervisors of the County of San Luis Obispo may award the contract to the third lowest responsible bidder. Such award, if made, will be made within 105 calendar days after the opening of proposals. The periods of time specified above within which the award of contract may be made shall be subject to extension for such further period as may be agreed upon in writing between the County of San Luis Obispo and the bidder concerned.

3-1.02 CONTRACT BONDS

The successful bidder shall furnish two (2) bonds:

1. The Payment bond to secure the claim payments of laborers, workers, mechanics, or materialmen providing goods, labor, or services under the contract. This bond shall be equal to one hundred percent (100%) of the total contract bid.
2. The Performance bond to guarantee the faithful performance of the contract. This bond shall be equal to one hundred percent (100%) of the total contract bid.

Forms for the two (2) required bonds are included in the section titled "Bid Proposal and Forms" of the Contract Documents.

Surety on said bonds must agree that death of the Contractor shall not relieve the surety of its obligation hereunder. The said surety, for the value received, must stipulate and agree that all alterations, extension of time, extra and additional work, and other changes authorized by these Specifications or any part of the contract may be made without securing consent of the surety on the contract bonds, and such actions shall not in any way affect the obligations of the surety on the bonds.

Attention is directed to the provisions in Section 6-1.075, "Guarantee," of the Amendments to the Standard Specifications.

3-1.03 EXECUTION OF CONTRACT

The contract shall be signed by the successful bidder and returned, together with the contract bonds, copy of insurance policies, and Certificates of Insurance, with documents to verify any self insurance coverage within ten (10) calendar days, not including Saturdays, Sundays, and legal holidays, after the bidder has received the contract for execution.

The contract shall not be deemed executed by the successful bidder unless all of the above documents are received by the County with the signed contract within said time period. The bidder's security may be forfeited for failure to execute the contract within the time specified.

SECTION 4. PROSECUTION AND PROGRESS OF THE WORK

4-1.01 GENERAL

Attention is directed to the provisions in Section 8, "Prosecution and Progress," of the Standard Specifications and these Special Provisions.

The Contractor shall begin work within ten (10) working days from the date of receipt of the County's "Notice to Proceed."

This work shall be diligently prosecuted to completion before the expiration of 30 WORKING DAYS from the date of receipt of the County's "Notice to Proceed." The Contractor shall not begin work in advance of receiving the County's "Notice to Proceed."

4-1.02 LIQUIDATED DAMAGES

Attention is directed to Section 8-1.07, "Liquidated Damages," of the Standard Specifications and these Special Provisions.

It is agreed by the parties to the contract that in the case all the work called for under the contract in all parts and requirements is not finished or completed within the number of working days as set forth in these Special Provisions, damage will be sustained by the County of San Luis Obispo, and that it is and will be impractical and extremely difficult to ascertain and determine the actual damage which the County will sustain in the event of and by reason of such delay; and it is therefore agreed that the Contractor will pay to the County of San Luis Obispo the sum of TWO THOUSAND EIGHT HUNDRED DOLLARS ($2,800.00) per day for each and every calendar days delay in finishing the work in excess of the number of working days prescribed above as liquidated and agreed damages; and the Contractor agrees to pay said liquidated damages herein provided for, and further agrees that the County may deduct the amount thereof from any moneys due or that may become due the Contractor under the contract.

The language in Sections 10253 through 10260 of the Public Contract Code are incorporated herein by reference as though fully set forth herein (with the word "Director" therein construed to mean the Public Works Director); provided, however, that prequalification of bidders shall not be required, and any references in said sections to prequalification of bidders are hereby deleted.

4-1.03 CONTRACT SUBMITTALS

The Contractor shall submit the following to the Engineer within ten (10) calendar days, not including Saturdays, Sundays, and legal holidays, of the Contractor's receipt of the fully executed contract:

- Storm Water Pollution Prevention Plan – 3 copies
- Recycling Plan

- Proposed Progress Schedule
- Identity of Project Safety Officer

The Contractor shall allow ten (10) days, not including Saturdays, Sundays, and legal holidays, for the Engineer's review. The Contractor shall revise and resubmit the submittal within five (5) days, not including Saturdays, Sundays, and legal holidays, of receipt of the Engineer's comments. No claim will be allowed for damages or extensions of time because of delays in work resulting from rejection of the submittals or from revisions and resubmittal of the submittals. The number of working days within which the Contractor must complete the work under this contract shall be reduced by 1 working day for each day the Contractor fails to submit or resubmit the required submittal to the Engineer within the prescribed time allowances.

The Engineer's review and approval shall not waive any contract requirements and shall not relieve the Contractor from complying with Federal, State, and local laws, regulations, and requirements. No claim will be allowed for damages or extensions of time because of delays in work resulting from any documents submitted by Contractor to any federal, state, or local agency that are determined by such agency to be incomplete or not in compliance with any applicable laws, regulations, or requirements.

4-1.04 MANDATORY PRE-CONSTRUCTION CONFERENCE

Prior to the issuance of the "Notice to Proceed" a mandatory pre-construction conference will be held at the office of the Construction Engineer for the purpose of discussing with the Contractor the scope of work, contract drawings, specifications, existing conditions, materials to be ordered, equipment to be used, and all essential matters pertaining to the prosecution and the satisfactory completion of the project as required. The Contractor's representatives at this conference shall include major superintendents and shall include major subcontractors' representatives. So long as the County provides the Contractor at least 5 calendar days advance notice of the date and time of said conference. The number of working days within which the Contractor must complete the work under this contract shall be reduced by 1 working day for each day said conference is delayed by the Contractor's failure to attend the conference with the appropriate representatives.

A written record of attendance and items discussed will be made by the Engineer and a copy of the record kept in the Engineer's files. If for any reason a pre-construction conference is not held the Engineer will notify the Contractor in writing.

SECTION 5. GENERAL AND MISCELLANEOUS

5-1.01 DEFINITIONS AND TERMS

Attention is directed to the provisions in Section 1, "Definitions and Terms," of the Standard Specifications with the modifications as set forth hereafter.

Section 1-1.13, "Department," of the Standard Specifications is hereby amended to read: "The County of San Luis Obispo acting by and through its Department of Public Works and Transportation."

Section 1-1.15, "Director," of the Standard Specifications is hereby amended to read: "The Director of the Department of Public Works and Transportation of the County of San Luis Obispo."

Section 1-1.18, "Engineer," of the Standard Specifications is hereby amended to read: "Any duly authorized representative either employed by or contracting with the Department of Public Works and Transportation acting within the scope of the particular duties delegated to them."

Section 1-1.19, "Engineer's Estimate," of the Standard Specifications is hereby amended to read: "The contract bid form indicating the approximate quantities of work to be performed as contained in the Bid Proposal."

Section 1-1.26, "Liquidated Damages," of the Standard Specifications is hereby amended to read: "The amount prescribed in Section 4, "Prosecution and Progress of the Work," of the Special Provisions pursuant to Government Code Section 53069.85 to be paid to the County, or to be deducted from any payments due, or to become due, the Contractor for each day's delay in completing the whole or any specified portion of work beyond the time allowed in the Contract Documents."

Section 1-1.39, "State," of the Standard Specifications is hereby amended to read: "The State of California and its political subdivision, the County of San Luis Obispo."

Section 1-1.40, "State Contract Act," of the Standard Specifications is hereby amended to read: "Only those sections or provisions of Chapter 1 of Part 2 of Division 2 of the Public Contract Code (Section 10100 et seq.) which are specifically incorporated into this contract are applicable to this contract. All other sections and provisions of Chapter 1 of Part 2 of Division 2 of the Public Contract Code are not applicable to this contract and do not constitute a part hereof."

5-1.02 SCOPE OF WORK

Attention is directed to the provisions in Section 4, "Scope of Work," of the Standard Specifications with the modifications as set forth hereafter.

Section 4-1.03B(1), "Increases of More Than 25 Percent," of the Standard Specifications is amended by adding the following sentence to the last paragraph: "Additionally, such written request by the Contractor shall be accompanied by adequate, detailed data to support actual costs incurred."

Section 4-1.03B(2), "Decreases of More Than 25 Percent, " of the Standard Specifications is hereby amended by modifying the first sentence of the first paragraph to read: "Should the total pay quantity of any item of work required under the contract be less than 75 percent of the Engineer's Estimate therefor, the Engineer may reserve the right to make no adjustment in the corresponding unit price for that item if he/she so elects, except that an adjustment in compensation pursuant to this Section will be made if requested in writing by the Contractor. Additionally, such written request by the Contractor shall be accompanied by adequate, detailed data to support actual costs incurred."

Section 4-1.03D, "Extra Work," of the Standard Specifications is hereby amended by adding the following sentences to the 2nd paragraph: "All extra work shall be reported daily by the Contractor upon forms furnished by the Engineer, signed by both parties at the conclusion of each workday. Said daily extra work reports shall thereafter be considered the true record of the extra work performed and shall become the basis of payment therefor."

5-1.03 CONTROL OF WORK

The Engineer will not have control over, be in charge of, nor be responsible for construction means, methods, techniques, sequences, or procedures, or for the safety precautions and programs in connection with the work, since these are solely Contractor's responsibility, unless otherwise required by the Contract Documents.

Attention is directed to Section 5, "Control of Work," of the Standard Specifications with the modifications as set forth hereafter.

Section 5-1.07, "Lines and Grades," of the Standard Specifications is hereby amended to read: "Stakes or marks will be set by the Engineer as the Engineer determines to be necessary to establish the lines and grades required for the completion of the work specified in these specifications, on the plans, and in the Special Provisions.

When the Contractor requests stakes or marks to be set, the Contractor shall notify the Engineer of the request in writing no less than three (3) working days in advance of starting operations that require their use. The Contractor shall also submit to the Engineer for acceptance, a tentative schedule of all anticipated staking requests for the initial thirty (30) working days of the contract. The Engineer shall determine if the staking request schedule is reasonable before recognizing any requests for stakes or marks to be set. Said schedule shall correlate with any order of work specified in the Contract Special Provisions. If any vegetation needs to be cleared or grubbed, as determined by the Engineer, before stakes or marks can be set, then the Contractor shall clear the obstructing

vegetation for the proper placement of stakes or marks. The Engineer and the Contractor shall agree on the extent of vegetation removal necessary to prepare the work site for the setting of stakes or marks. Vegetation removal for the preparation of the work site for the setting of stakes or marks shall be considered as included in the various items of work involved and no additional compensation will be allowed therefor. The Contractor will not be entitled to any compensation for any perceived delay, nor entitled to an extension of time for any perceived delay without due cause for the period between when the work site is deemed cleared by the Engineer and when the stakes or marks are set for use by the Contractor.

Stakes and marks set by the Engineer shall be carefully preserved by the Contractor. In case the stakes and marks are destroyed or damaged, the stakes and marks will be replaced or restored at the Engineer's earliest convenience. The Contractor will be charged $875.00 for each stake or mark replaced or restored which in the judgment of the Engineer had been carelessly or willfully destroyed or damaged by the Contractor's operations. This charge will be deducted from any moneys due or to become due the Contractor."

Section 5-1.116, "Differing Site Conditions," of the Amendments to the Standard Specifications is hereby amended by including the following language from Section 7104 of the Public Contract Code: "7104. Any public works contract of a local public entity which involves digging trenches or other excavations that extend deeper than four feet below the surface shall contain a clause which provides the following: (a) That the contractor shall promptly, and before the following conditions are disturbed, notify the public entity, in writing, of any: (1) Material that the contractor believes may be material that is hazardous waste, as defined in Section 25117 of the Health and Safety Code, that is required to be removed to a Class I, Class II, or Class III disposal site in accordance with provisions of existing law. (2) Subsurface or latent physical conditions at the site differing from those indicated. (3) Unknown physical conditions at the site of any unusual nature, different materially from those ordinarily encountered and generally recognized as inherent in work of the character provided for in the contract. (b) That the public entity shall promptly investigate the conditions, and if it finds that the conditions do materially so differ, or do involve hazardous waste, and cause a decrease or increase in the contractor's cost of, or the time required for, performance of any part of the work shall issue a change order under the procedures described in the contract. (c) That, in the event that a dispute arises between the public entity and the contractor whether the conditions materially differ, or involve hazardous waste, or cause a decrease or increase in the contractor's cost of, or time required for, performance of any part of the work, the contractor shall not be excused from any scheduled completion date provided for by the contract, but shall proceed with all work to be performed under the contract. The contractor shall retain any and all rights provided either by contract or by law which pertain to the resolution of disputes and protests between the contracting parties."

5-1.04 PREVAILING WAGE

Attention is directed to the provisions in Section 7-1.01A(2), "Prevailing Wage," of the Standard Specifications and these Special Provisions.

Pursuant to the provisions of Section 1773 of the California Labor Code, the Board of Supervisors of the County of San Luis Obispo has obtained from the Director of the California Department of Industrial Relations the general prevailing rate of per diem wages and the general prevailing rate for holiday and overtime work for the locality in which the work is to be performed for each needed craft, classification, or type of workman. Copies of said prevailing rate of per diem wages are on file in the Office of the Clerk of the Board of Supervisors and available at the California Department of Industrial Relations' web site at:

www.dir.ca.gov/DLSR/PWD.

The wage rates determined by the Director of Industrial Relations refer to expiration dates. Prevailing wage determinations with a single asterisk after the expiration date are in effect on the date of advertisement for bids and are good for the life of the contract. Prevailing wage determinations with double asterisks after the expiration date indicate that the wage rate to be paid for work performed after this date has been determined. If work is to extend past this date, the new rate shall be paid and incorporated in the contract. The Contractor shall contact the Department of Industrial Relations as indicated in the wage rate determinations to obtain predetermined wage changes.

Pursuant to Section 1773.2 of the Labor Code, a copy of said general prevailing rates shall be posted by the Contractor in a prominent place at the site of the work.

Additionally, the Director of Industrial Relations has reserved the right to issue corrected wage determinations for certain crafts contained in the prevailing wage determinations applicable to this contract. These corrected prevailing wage rates shall apply to this contract in the same manner as if they had been published in the prevailing wage determinations applicable to this contract. These revisions to the general prevailing wage rates are on file at the Office of the Clerk of the Board of Supervisors and available at the California Department of Industrial Relations' web site at:

www.dir.ca.gov/DLSR/PWD.

Additionally, changes in general prevailing wage determinations which conform to Labor Code Section 1773.6 and Title 8 California Code of Regulations Section 16204 shall apply to the contract when issued by the Director of Industrial Relations at least ten (10) calendar days prior to the date of the Notice to Bidders for the project. Changes, if any, to the general prevailing wage rate will be on file at the Office of the Clerk of the Board of Supervisors and available at the California Department of Industrial Relations' web site at:

www.dir.ca.gov/DLSR/PWD.

5-1.05 PRESERVATION OF PROPERTY

Attention is directed to the provisions in Section 7-1.11, "Preservation of Property," of the Standard Specifications is hereby amended by adding the following to the end of the second paragraph: "Pursuant to Section 8771(b) of the California Business and Professions Code, existing survey monuments that control the location of subdivisions, tracts, boundaries, roads, streets, or highways, or provide survey control that are within or adjacent to the Contractor's operations, shall be located and referenced by or under the direction of a licensed land surveyor or registered civil engineer prior to the time when any streets, highways, other rights-of-way, or easements are improved, constructed, reconstructed, maintained, resurfaced, or relocated. In the event that any existing survey monument is disturbed in any way by the Contractor's operations as determined by a licensed land surveyor or registered civil engineer, they shall be reset accordingly and a corner record shall be filed with the county surveyor prior to the recording of a certificate of completion for the project. Full compensation for furnishing all labor, materials, tools, equipment, and incidentals, and for doing all the work involved in locating existing survey monuments by or under the direction of a licensed land surveyor or registered civil engineer, resetting any disturbed survey monument and filing a corner record, shall be considered as included in the prices paid for the various contract items of work and no additional compensation will be allowed therefor."

5-1.06 PROGRESS SCHEDULE

Progress schedules will be required for this contract and shall conform to the provisions in Section 8-1.04, "Progress Schedules," of the Standard Specifications.

The Contractor shall submit to the Engineer a practicable progress schedule in conformance with the provisions in Section 4-1.03, "Contract Submittals," of these Special Provisions, and within 5 working days of the Engineer's written request at any other time.

5-1.07 MEASUREMENT AND PAYMENT

Attention is directed to the provisions in Section 9, "Measurement and Payment," of the Standard Specifications with the modifications as set forth hereafter.

The 13th paragraph of Section 9-1.01, "Measurement of Quantities," of the Standard Specifications shall be amended to read as follows: "Whenever pay quantities of materials are determined by weighing, the scales shall be operated by a weighmaster licensed in accordance with provisions of the California Business and Professions Code, Division 5, Chapter 7. The contractor shall furnish a Public Weighmaster's certificate, or a private Weighmaster's certificate (load slip) with each load and a Daily Record of Platform Scale Weights. The Weighmaster's certificates shall be numbered consecutively to correspond with the Daily Record of Platform Scale Weights. The Daily Record of Platform Scale Weights shall be prepared using a form supplied by the County and shall be delivered to the Engineer at the end of each day. Contractor shall provide the County sufficient advance notice so as to enable a representative of the County to be present to witness the Weighing and check the Daily Record of Platform Scale Weights."

Section 9-1.04, "Notice of Potential Claim," of the Standard Specifications is hereby amended by adding the following: "Additionally, the written notice of potential claim shall be submitted on Caltrans form CEM-6201 and shall be certified with reference to the California False Claims Act, Government Code Sections 12650-12655. The notice shall set forth the reasons for which the Contractor believes additional compensation will or may be due and the nature of the costs involved. Unless the amount of the potential claim has been stated in the written notice, the Contractor shall within 15 working days of submitting said notice, furnish an estimate of the cost of the affected work and impacts, if any, on project completion. Said estimate of costs may be changed or updated by the Contractor when conditions have changed. When the affected work is completed, the Contractor shall submit substantiation of actual costs. Failure to do so shall be sufficient cause for denial of any claim subsequently filed on the basis of said notice of potential claim.

Should the Contractor, in conjunction with or subsequent to the assertion of a potential claim, request inspection and copying of documents or records in the possession of the County that pertain to the potential claim, the Contractor shall make its records of the project, as deemed by the County to be pertinent to the potential claim, available to the County for inspection and copying."

Section 9-1.05, "Stop Notices," of the Standard Specifications is hereby amended by adding the following statement: "Stop notice information may be obtained from the Department of Public Works and Transportation."

Section 9-1.06, "Partial Payments," of the Standard Specifications is hereby amended by modifying the third paragraph to read: "In accordance with PUBLIC CONTRACT CODE SECTION 7201, the retention proceeds withheld from payment shall not exceed 5 percent of the payment."

Section 9-1.06, "Partial Payments," of the Standard Specifications is hereby amended by adding the following statement: "The Contractor will be required to certify each progress pay estimate. The certification will include the following

Contractor Verification: Contractor has carefully reviewed this entire document and hereby attests that the quantities and amounts stated herein accurately represent the total work that has been performed, and materials that have been provided, under this Contract, and that all such work and materials are in compliance with the Contract Documents."

Section 9-1.065, "Payment of Withheld Funds," of the Standard Specifications is hereby amended to read: "Attention is directed to Section 9-1.06, "Partial Payments," of the Standard Specifications, to these Special Provisions and in particular to the retention provisions therein.

Upon the Contractor's request, the County will make payment to the Contractor of funds withheld to ensure performance of this contract if the Contractor, in accordance with Public Contract Code Section 22300, deposits in escrow with the County, or with a state or federally chartered bank in California securities equivalent to the amount withheld. Securities eligible for investment under this section shall include bank or savings and loan certificates of deposit, the securities enumerated in Government Code Section 16430, interest bearing demand deposit accounts, standby letters of credit, or any other security mutually agreed to by the Contractor and the County. Upon satisfactory completion of the contract, the securities shall be returned to the Contractor. Alternatively, the Contractor may request that the County make payment of retention earned directly to the escrow agent as provided in subdivision (b) of Section 22300 of the Public Contract Code.

Each of the following conditions shall apply to the deposit of securities into escrow:

(a) The Contractor shall bear the expense of the County and the escrow agent (either the County or the bank) in connection with the escrow deposit made.

(b) Securities or certificates of deposit to be placed in escrow shall be of a value at least equivalent to the amounts of retention to be paid to the Contractor pursuant to this section.

(c) The value of any securities placed in escrow shall be based upon the market value of such securities as of the date the securities are deposited in escrow, and not upon the face value of the securities. Such securities shall be valued by the County, whose decision on valuation of the securities shall be final.

(d) The escrow agreement shall provide that the escrow agent must convert the securities deposited therein for cash, in whole or in part, to meet the defaults by the Contractor upon a unilateral demand for such conversion by the Public Works Director, and further that any amount so demanded shall be paid to the County upon said unilateral demand for payment.

(e) The Contractor shall be the beneficial owner of any securities substituted for moneys withheld and shall receive any interest thereon.

(f) The Contractor shall enter into an escrow agreement satisfactory to the County, which agreement shall be substantially similar to the form set forth in Public Contract Code Section 22300. The Contractor shall obtain the written consent of the surety to such agreement. The Public Works Director is authorized to sign such escrow agreements on behalf of the County.

Section 9-1.07B, "Final Payments and Claims," of the Standard Specifications is hereby amended by deleting the introductory phrase "After acceptance by the Director," and inserting in its place the phrase: "After the Engineer makes a formal recommendation to the Director that the Public Works Department initiates the internal procedures that would allow the Board to accept the work at a future Board meeting,"

5-1.08 DETERMINATION OF DISPUTES

Public Contract Code Sections 10240 through 10245.4 shall not be applicable to this contract. Section 9-1.10, "Arbitration," of the Standard Specifications is hereby deleted. All disputes and claims arising under or by virtue of this contract shall be directed to and be determined by the Public Works Director. The Public Works Director's determination of disputes and claims pursuant to these Special Provisions shall constitute the decision of the County.

The parties agree that to the extent Article 1.5 of the Public Contract Code (Public Contract Code Section 20104 et seq) is applicable to any claims made under this contract, nothing in Article 1.5 excuses Contractor's compliance with the claim procedures set forth in the Standard Specifications (as amended by these Contract Documents). Nothing in Article 1.5 extends the time limit or supercedes the notice requirements set forth in the Standard Specifications (as amended by these Contract Documents). The parties mutually agree that all information required of the Contractor under said Standard Specifications (as amended by these Contract Documents) is hereby incorporated into the requirements of Article 1.5.

Article 1.5 (commencing with Section 20104) of Chapter 1 of Part 3 of Division 2 of the Public Contract Code provides as follows:

Article 1.5 Resolution of Construction Claims

20104. (a) (1) This article applies to all public works claims of three hundred seventy-five thousand dollars ($375,000) or less which arise between a contractor and a local agency. (2) This article shall not apply to any claims resulting from a contract between a contractor and a public agency when the public agency has elected to resolve any disputes pursuant to Article 7.1 (commencing with Section 10240) of Chapter 1 of Part 2.

(b) (1) "Public work" has the same meaning as in Sections 3100 and 3106 of the Civil Code, except that "public work" does not include any work or improvement contracted for by the state or the Regents of the University of California. (2) "Claim" means a separate demand by the Contractor for (A) a time extension, (B)

payment of money or damages arising from work done by, or on behalf of, the Contractor pursuant to the contract for a public work and payment of which is not otherwise expressly provided for or the claimant is not otherwise entitled to, or (C) an amount the payment of which is disputed by the local agency.

(c) The provisions of this article or a summary thereof shall be set forth in the plans or specifications for any work which may give rise to a claim under this article.

(d) This article applies only to contracts entered into on or after January 1, 1991.

20104.2. For any claim subject to this article, the following requirements apply:

(a) The claim shall be in writing and include the documents necessary to substantiate the claim. Claims must be filed on or before the date of final payment. Nothing in this subdivision is intended to extend the time limit or supersede notice requirements otherwise provided by contract for the filing of claims.

(b) (1) For claims of less than fifty thousand dollars ($50,000), the local agency shall respond in writing to any written claim within 45 days of receipt of the claim, or may request, in writing, within 30 days of receipt of the claim, any additional documentation supporting the claim or relating to defenses to the claim the local agency may have against the claimant. (2) If additional information is thereafter required, it shall be requested and provided pursuant to this subdivision, upon mutual agreement of the local agency and the claimant. (3) The local agency's written response to the claim, as further documented, shall be submitted to the claimant within 15 days after receipt of the further documentation or within a period of time no greater than that taken by the claimant in producing the additional information, whichever is greater.

(c) (1) For claims of over fifty thousand dollars ($50,000) and less than or equal to three hundred seventy-five thousand dollars ($375,000), the local agency shall respond in writing to all written claims within 60 days of receipt of the claim, or may request, in writing, within 30 days of receipt of the claim, any additional documentation supporting the claim or relating to defenses to the claim the local agency may have against the claimant. (2) If additional information is thereafter required, it shall be requested and provided pursuant to this subdivision, upon mutual agreement of the local agency and the claimant. (3) The local agency's written response to the claim, as further documented, shall be submitted to the claimant within 30 days after receipt of the further documentation, or within a period of time no greater than that taken by the claimant in producing the additional information or requested documentation, whichever is greater.

(d) If the claimant disputes the local agency's written response, or the local agency fails to respond within the time prescribed, the claimant may so notify the local agency, in writing, either within 15 days of receipt of the local agency's response or within 15 days of the local agency's failure to respond within the time

prescribed, respectively, and demand an informal conference to meet and confer for settlement of the issues in dispute. Upon a demand, the local agency shall schedule a meet and confer conference within 30 days for settlement of the dispute.

(e) Following the meet and confer conference, if the claim or any portion remains in dispute, the claimant may file a claim as provided in Chapter 1 (commencing with Section 900) and Chapter 2 (commencing with Section 910) of Part 3 of Division 3.6 of Title 1 of the Government Code. For purposes of those provisions, the running of the period of time within which a claim must be filed shall be tolled from the time the claimant submits his or her written claim pursuant to subdivision (a) until the time that claim is denied as a result of the meet and confer process, including any period of time utilized by the meet and confer process.

(f) This article does not apply to tort claims and nothing in this article is intended nor shall be construed to change the time periods for filing tort claims or actions specified by Chapter 1 (commencing with Section 900) and Chapter 2 (commencing with Section 910) of Part 3 of Division 3.6 of Title 1 of the Government Code.

20104.4. The following procedures are established for all civil actions filed to resolve claims subject to this article:

(a) Within 60 days, but no earlier than 30 days, following the filing or responsive pleadings, the court shall submit the matter to nonbinding mediation unless waived by mutual stipulation of both parties. The mediation process shall provide for the selection within 15 days by both parties of a disinterested third person as mediator, shall be commenced within 30 days of the submittal, and shall be concluded within 15 days from the commencement of the mediation unless a time requirement is extended upon a good cause showing to the court or by stipulation of both parties. If the parties fail to select a mediator within the 15-day period, any party may petition the court to appoint the mediator.

(b) (1) If the matter remains in dispute, the case shall be submitted to judicial arbitration pursuant to Chapter 2.5 (commencing with Section 1141.10) of Title 3 of Part 3 of the Code of Civil Procedure, notwithstanding Section 1141.11 of that code. The Civil Discovery Act of 1986 (Article 3 (commencing with Section 2016) of Chapter 3 of Title 3 of Part 4 of the Code of Civil Procedure) shall apply to any proceeding brought under this subdivision consistent with the rules pertaining to judicial arbitration. (2) Notwithstanding any other provision of law, upon stipulation of the parties, arbitrators appointed for purposes of this article shall be experienced in construction law, and, upon stipulation of the parties, mediators, and arbitrators shall be paid necessary and reasonable hourly rates of pay not to exceed their customary rate, and such fees and expenses shall be paid equally by the parties, except in the case of arbitration where the arbitrator, for good cause, determines a different division. In no event shall these fees or expenses be paid by state or county funds. (3) In addition to Chapter 2.5 (commencing with Section 1141.10) of Title 3 of Part 3 of the Code of Civil

Procedure, any party who after receiving an arbitration award requests a trial de novo but does not obtain a more favorable judgment shall, in addition to payment of costs and fees under that chapter, pay the attorney's fees of the other party arising out of the trial de novo.

(c) The court may, upon request by any party, order any witnesses to participate in the mediation or arbitration process.

20104.6. (a) No local agency shall fail to pay money as to any portion of a claim which is undisputed except as otherwise provided in the contract.

(b) In any suit filed under Section 20104.4, the local agency shall pay interest at the legal rate on any arbitration award or judgment. The interest shall begin to accrue on the date the suit is filed in a court of law.

5-1.09 AUDIT OF RECORDS

The Contractor shall maintain and make available for examination and audit by the State Auditor General and/or duly authorized representatives of the State, County, or Federal Governments, all books, papers, accounting records, and other documents pertaining to the cost and performance of this contract.

The Contractor shall retain said books, papers, accounting records, and other documents for a period of three years after the date of final payment under this contract (Government Code Section 8546.7).

5-1.10 CONTRACTOR'S REPORTS

The Contractor shall complete a daily report indicating location worked, total manpower per construction trade for each task, major equipment on site, each subcontractor's manpower and equipment, weather conditions, and other related information involved in the performance of the work. The daily report shall be completed on forms furnished by the Engineer and shall be submitted to the Engineer at the conclusion of each workday. The report shall comment on the daily progress and status of the work within each major component of the work.

5-1.11 REMOVAL OF ASBESTOS AND HAZARDOUS SUBSTANCES

When the presence of asbestos or hazardous substances are not shown on the plans or indicated in the specifications and the Contractor encounters materials which the Contractor reasonably believes to be asbestos or a hazardous substance as defined in Section 25914.1 of the Health and Safety Code, and the asbestos or hazardous substance has not been rendered harmless, the Contractor may continue work in unaffected areas reasonably believed to be safe. The Contractor shall immediately cease work in the affected area and report the condition to the Engineer in writing.

In conformance with Section 25914.1 of the Health and Safety Code, removal of asbestos or hazardous substances including exploratory work to identify and

determine the extent of the asbestos or hazardous substance will be performed by separate contract.

If delay of work in the area delays the current controlling operation, the delay will be considered a right of way delay and the Contractor will be compensated for the delay in conformance with the provisions in Section 8-1.09, "Right of Way Delays," of the Standard Specifications.

5-1.12 SUBCONTRACTING

No subcontract releases the Contractor from the contract or relieves the Contractor of their responsibility for a subcontractor's work.

If the Contractor violates Public Contract Code §4100 et seq., the County may exercise the remedies provided under Public Contract Code §4100. The County may refer the violation to the Contractors State License Board as provided under Public Contract Code §4111.

The Contractor shall perform work equaling at least 30 percent of the value of the original total bid with the Contractor's own employees and equipment, owned or rented, with or without operators.

Each subcontract shall comply with the contract.

Each subcontractor shall have an active and valid State contractor's license with a classification appropriate for the work to be performed (Business and Professions Code, §7000 et seq.).

The Contractor shall submit copies of subcontracts upon request by the Engineer.

The Contractor shall submit a Subcontracting Request form prior to commencement of that portion of the work.

The Contractor shall not use a debarred subcontractor. Pursuant to the provisions in Section 1777.1 of the Labor Code, the Labor Commissioner publishes and distributes a list of contractors ineligible to perform work as a subcontractor on a public works project. This list of debarred contractors is available from the Department of Industrial Relations web site at:

http://www.dir.ca.gov/DLSE/Debar.html.

Upon request by the Engineer, the Contractor shall immediately remove and not again use a subcontractor who fails to prosecute the work satisfactorily.

5-1.13 CONSTRUCTION SUBMITTALS

Construction project submittals, including shop drawings and manufacturer's product specifications, shall be supplied for all material, equipment items, and for other items of work required by its contract documents. The Contractor shall supply 5 copies of manufacturer's scaled, dimensioned shop drawings complete

with all information required to describe the item and demonstrate compliance with contract drawings and these specifications. Submittals will only be accepted from the Contractor (not sub-contractor or material supplier). Neither fabrication nor onsite preparation shall be started before receipt of written review from the County.

Each submittal shall be sequentially numbered, dated, and appropriately titled with the specification number and description.

The Contractor's responsibility for errors, omissions, and deviations from the requirements of the contract documents in submittals is not relieved by the County's review. The Contractor shall be responsible for confirming and correlating all quantities and dimensions, the compatibility of different components, selecting fabrication processes and techniques of construction, coordinating its work with that of other trades or other contractors at the site, and performing its work in a safe and satisfactory manner. The County will require 10 working days for submittal review. No claim will be allowed for damages or extensions of time because of delays in work resulting from rejection of material or from revisions and resubmittal of shop drawings, project data, or samples.

Resubmittals will be reviewed and returned in the same review period as the original submittals. It is considered reasonable that the Contractor shall make a complete and acceptable submittal by the second submission. The Engineer reserves that right to withhold monies due to the Contractor to cover additional costs of any review beyond the second submittal. Full compensation for preparing submittals and shop drawings, as required, shall be considered as included in the contract items of work involved and no additional compensation will be allowed therefor.

5-1.14 LEGAL ADDRESS OF THE CONTRACTOR

Both the address given in the proposal and the Contractor's office in the vicinity of the work are hereby designated as places to either of which drawings, letters, notices, or other articles or communications to the Contractor may be mailed, transmitted electronically, or delivered. The mailing, electronic transmission, or delivery at either of these places shall be deemed sufficient notice thereof upon the Contractor.

Nothing herein contained shall be deemed to preclude the service of any drawing, letter, notice, article, or communication to, or upon, the Contractor or Contractor's representative personally. The address named in the proposal may be changed at any time by written notice from the Contractor to the Engineer.

5-1.15 WEEKLY PROGRESS MEETINGS

Weekly meetings shall be held at the project site to review the progress of the work and to discuss any problems which may have occurred. Meeting shall include the Engineer, inspectors, and the Contractor's foreman. The Contractor shall provide an updated schedule at the weekly meeting.

Full compensation for preparing updated schedules and attending the progress meetings, as required, shall be considered as included in the contract items of work involved and no additional compensation will be allowed therefor.

5-1.16 GOVERNMENT CODE CLAIM REQUIREMENTS

Nothing in these Contract Documents shall excuse a Contractor from fully complying with the requirements of Part 3 of division 3.6 of Title 1 of the Government Code (commencing with section 900). Said requirements must be complied with before filing any claim in any court of law, and are in addition to the other claims procedures set forth in the Contract Documents shall be considered a substitute or alternative procedure for complying with the requirements of Part 3 of Division 3.6 of Title 1 of the Government Code (commencing with section 900.)

5-1.17 SURFACE MINING AND RECLAMATION ACT

Imported borrow or aggregate material must come from a surface mine permitted under the Surface Mining and Reclamation Act of 1975 (SMARA), Pub Res Code § 2710, et seq., or from an exempt site.

The Department of Conservation, Office of Mine Reclamation maintains a list of permitted mine sites. For the list of permitted sites, go to:

http://www.conservation.ca.gov/omr/ab_3098_list

If Contractor obtains import borrow or aggregate material from a surface mine not on this list, Contractor shall submit written proof the mine is exempt from SMARA to the Engineer.

5-1.18 SUPPLEMENTAL WORK PAYMENTS

Certain extra work to be performed on this project has been designated in the bid proposal as a contract item of work. For bidding purposes, the Contractor shall deem the amount set forth in the "Total Amount" column for the designated item as the maximum amount allotted for said item of extra work.

The County reserves the right to increase, decrease or entirely eliminate any supplemental work item in this contract without penalty. Notwithstanding any other provision to the contrary (including but not limited to section 4-1.03B(3) of the Standard Specifications), the Contractor has no right to receive any payment(s) for Supplemental Work that is decreased or entirely eliminated by the County.

5-1.19 SOLID WASTE MANAGEMENT

The Contractor shall recycle at least 50% of the construction and demolition waste generated by the project.

The following is a list of IWMA-Certified Recycling Facilities:

C&D Recycling Facility at Cold Canyon Landfill	805-549-8332
C&D Recycling Facility at Chicago Grade Landfill	805-466-2985
North SLO County Recycling	805-434-0043
API (roll-off/debris box company)	805-928-8689
R&R (a roll-off/debris box company)	805-929-8000
Recycling Facility at the Paso Robles Landfill	805-238-2028
Santa Maria Transfer Station	805-922-9255
Bedford Enterprises/SMART	805-922-4977

The Contractor shall complete and sign the "RECYCLING PLAN" form in conformance with the provisions in Section 4-1.03, "Contract Submittals," of these Special Provisions. This form must be submitted and approved prior to receiving the Notice to Proceed.

This form must show how at least 50% of the project construction and demolition waste will be recycled.

The Contractor shall maintain receipts or other documentation for any facility or site that received waste from the project.

The Contractor shall submit a complete and accurate "DISPOSAL REPORT" form with original receipts and supporting documentation. This form must be submitted and approved prior to receiving the Notice of Completion.

If the Contractor fails to submit the required information showing the 50% recycling goal was met, the County could impose a penalty equal to 2 percent of the total contract amount.

Full compensation for complying with these requirements shall be considered as included in the prices paid for the various items of work generating such construction and demolition waste and no additional compensation will be allowed therefor.

The following are copies of the "RECYCLING PLAN" and "DISPOSAL REPORT" forms:

RECYCLING PLAN FOR COUNTY PROJECTS

SECTION 1. PROJECT INFORMATION			
Contract Title	Contractor Name		
	Contractor Phone	Contractor Fax	
Contract Number	Street Address		
Total Contract Amount	City, State, Zip		
Print Name and Title	Signature	Date	

SECTION 2. RECYCLING PLAN					
	Before Construction (estimated tons)				
	Landfill	Recycling Facility		Reuse	
Materials	(Tons)	(Tons)	Location	(Tons)	Location
Cleared Vegetation					
Asphalt Concrete					
Concrete					
Metals (including spent equipment)					
Lumber					
Drywall					
Mixed Recyclables					
Trash					
Totals					
% Diversion					

Official Use Only		
Recycling Plan Approved ☐	Recycling Plan Denied ☐	
Information Required:		
Print Name and Title	Signature	Date

DISPOSAL REPORT FOR COUNTY PROJECTS

SECTION 1. PROJECT INFORMATION		
Contract Title	Contractor Name	
	Contractor Phone	Contractor Fax
Contract Number	Street Address	
Total Contract Amount	City, State, Zip	

Contractor Certification: I certify under penalty of perjury that the information provided in this form is complete and accurate.

Print Name and Title	Signature	Date

SECTION 2. DISPOSAL REPORT

	After Construction (actual tons)				
	Landfill	Recycling Facility		Reuse	
Materials	(Tons)	(Tons)	Location	(Tons)	Location
Cleared Vegetation					
Asphalt Concrete					
Concrete					
Metals (including spent equipment)					
Lumber					
Drywall					
Mixed Recyclables					
Trash					
Totals					
% Diversion					

I have reviewed and approved the information submitted in this report for completeness

Resident Engineer's Name:	Signature:	Date:

Official Use Only

Disposal Report Approved ☐	Disposal Report Denied ☐

Information Required

Print Name and Title	Signature	Date

SECTION 6. (*BLANK*)

SECTION 7. (*BLANK*)

SECTION 8. MATERIALS

8-1.01 PREQUALIFIED AND TESTED SIGNING AND DELINEATION MATERIALS:

The Department maintains the following list of Prequalified and Tested Signing and Delineation Materials. The Engineer shall not be precluded from sampling and testing products on the list of Prequalified and Tested Signing and Delineation Materials.

The manufacturer of products on the list of Prequalified and Tested Signing and Delineation Materials shall furnish the Engineer a Certificate of Compliance in conformance with the provisions in Section 6-1.07, "Certificates of Compliance," of the Standard Specifications for each type of traffic product supplied.

For those categories of materials included on the list of Prequalified and Tested Signing and Delineation Materials, only those products shown within the listing may be used in the work. Other categories of products, not included on the list of Prequalified and Tested Signing and Delineation Materials, may be used in the work provided they conform to the requirements of the Standard Specifications.

Materials and products may be added to the list of Prequalified and Tested Signing and Delineation Materials if the manufacturer submits a New Product Information Form to the New Product Coordinator at the Transportation Laboratory. Upon a Departmental request for samples, sufficient samples shall be submitted to permit performance of required tests. Approval of materials or products will depend upon compliance with the specifications and tests the Department may elect to perform.

8-1.02 PAVEMENT MARKERS, PERMANENT TYPE:

Retroreflective With Abrasion Resistant Surface (ARS)

A. Apex, Model 921AR (100mm x 100mm) {4inches x 4inches}

B. Avery Dennison (formerly Stimsonite), Models C88 (100mm x 100mm) {4inches x 4inches}, 911 (100mm x 100mm) {4inches x 4inches} and 953 (70mm x 114mm) {2.75inches x 4.5inches}

C. Ray-O-Lite, Model "AA" ARS (100mm x 100mm) {4inches x 4inches}

D. 3M Series 290 (89mm x 100 mm) {3.5inches x 4inches}

E. 3M Series 290 PSA, with pressure sensitive adhesive pad (89mm x 100mm) {3.5inches x 4inches}

Retroreflective With Abrasion Resistant Surface (ARS)

(for recessed applications only)

A. Avery Dennison (formerly Stimsonite), Model 948 (58mm x 119mm) {2.3inches x 4.7inches}

B. Avery Dennison (formerly Stimsonite), Model 944SB (51mm x 100mm) {2inches x 4inches}*

C. Ray-O-Lite, Model 2002 (58mm x 117mm) {2.3inches x 4.6inches}

D. Ray-O-Lite, Model 2004 ARS (51mm x 100mm) {2inches x 4inches}*

*For use only in 114mm {4.5inches} wide (older) recessed slots

Non-Reflective, 100mm {4inches}Round

A. Alpine Products, "D-Dot" and "ANR" (ABS)
B. Apex Universal (Ceramic)
C. Apex Universal, Models 929 (ABS) and 929PP (Polypropylene)
D. Elgin Molded Plastics, "Empco-Lite" Model 900 (ABS)
E. Glowlite (Ceramic)
F. Hi-Way Safety, Inc., Models P20-2000W and 2001Y (ABS)
G. Interstate Sales, "Diamond Back" (ABS) and (Polypropylene)
H. Novabrite Models Cdot (White) Cdot-y (Yellow), Ceramic
I. Novabrite Models Adot-w (White) Adot-y (Yellow), (ABS)
J. Novabrite Models Pdot-w (White) Pdot-y (Yellow), Polypropylene
K. Road Creations, Model RCB4NR (Acrylic)
L. Three D Traffic Works TD10000 (ABS), TD10500 (Polypropylene)
M. Zumar Industries, "Titan TM40A" (ABS)

8-1.03 PAVEMENT MARKERS, TEMPORARY TYPE:

Temporary Markers For Long Term Day/Night Use (6 months or less)

A. Apex Universal, Model 924 (100mm x 100mm) {4inches x 4inches}
B. Elgin Molded Plastics, "Empco-Lite" Model 901 (100mm x 100mm){4inches x 4inches}
C. Road Creations, Model R41C (100mm x 100mm) {4inches x 4inches}
D. Vega Molded Products "Temporary Road Marker" (75mm x 100 mm) {3inches x 4inches}

Temporary Markers For Short Term Day/Night Use (14 days or less)

(For seal coat or chip seal applications, clear protective covers are required)

A. Apex Universal, Model 932
B. Bunzl Extrusion, Models T.O.M., T.R.P.M., and "HH" (High Heat)
C. Hi-Way Safety, Inc., Model 1280/1281

8-1.04 STRIPING AND PAVEMENT MARKING MATERIAL:

Permanent Traffic Striping and Pavement Marking Tape

A. Advanced Traffic Marking, Series 300 and 400
B. Brite-Line, Series 1000
C. Brite-Line, "DeltaLine XRP"
D. Swarco Industries, "Director 35" (For transverse application only)
E. Swarco Industries, "Director 60"
F. 3M, "Stamark" Series 380 and 5730
G. 3M, "Stamark" Series 420 (For transverse application only)

Temporary (Removable) Striping and Pavement Marking Tape (6 months or less)

A. Advanced Traffic Marking, Series 200
B. Brite-Line, Series 100
C. Garlock Rubber Technologies, Series 2000

D. P.B. Laminations, Aztec, Grade 102
E. Swarco Industries, "Director-2"
F. Trelleborg Industri, R140 Series
G. 3M, Series 620 "CR", and Series A750
H. 3M, Series A145, Removable Black Line Mask
(Black Tape: for use only on Asphalt Concrete Surfaces)
I. Advanced Traffic Marking Black "Hide-A-Line"
(Black Tape: for use only on Asphalt Concrete Surfaces)
J. Brite-Line "BTR" Black Removable Tape
(Black Tape: for use only on Asphalt Concrete Surfaces)
K. Trelleborg Industri, RB-140
(Black Tape: for use only on Asphalt Concrete Surfaces)

Preformed Thermoplastic (Heated in place)

A. Avery Dennison, "Hotape"
B. Flint Trading, "Premark," "Premark 20/20 Flex," and "Premark 20/20 Flex Plus"

Ceramic Surfacing Laminate, 150 mm x 150 mm {6inches x 6inches}

A. Safeline Industries/Highway Ceramics, Inc.

CLASS 1 DELINEATORS
One Piece Driveable Flexible Type, 1700 mm {66inches}

A. Bunzl Extrusion, "Flexi-Guide Models 400 and 566"
B. Carsonite, Curve-Flex CFRM-400
C. Carsonite, Roadmarker CRM-375
D. FlexStake, Model 654 TM
E. GreenLine Models HWD1-66 and CGD1-66
F. J. Miller Industries, Model JMI-375 (with soil anchor)

Special Use Type, 1700 mm {66 inches}

A. Bunzl Extrusion, Model FG 560 (with 450 mm {18inches} U-Channel base)
B. Carsonite, "Survivor" (with 450 mm {18inches} U-Channel base)
C. Carsonite, Roadmarker CRM-375 (with 450 mm {18inches} U-Channel base)
D. FlexStake, Model 604
E. GreenLine Models HWDU and CGD (with 450mm {18inches} U-Channel base)
F. Impact Recovery Model D36, with #105 Driveable Base
G. Safe-Hit with 200 mm {8inches}pavement anchor (SH248-GP1)
H. Safe-Hit with 380 mm {15inches} soil anchor (SH248-GP2) and with 450 mm {18inches}soil anchor (SH248-GP3)

Surface Mount Type, 1200mm {48inches}

A. Bent Manufacturing Company, Masterflex Model MF-180EX-48
B. Carsonite, "Super Duck II"
C. FlexStake, Surface Mount, Models 704 and 754 TM

D. Impact Recovery Model D48, with #101 Fixed (Surface-Mount) Base
E. Three D Traffic Works "Channelflex" ID No. 522248W

CHANNELIZERS
Surface Mount Type, 900mm {36inches}

A. Bent Manufacturing Company, Masterflex Models MF-360-36 (Round) and MF-180-36 (Flat)
B. Bunzl Extrusion, Flexi-Guide Models FG300LD and FG300UR
C. Carsonite, "Super Duck" (Flat SDF-436, Round SDR-336)
D. Carsonite, "Super Duck II" Model SDCF203601MB "The Channelizer"
E. FlexStake, Surface Mount, Models 703 and 753 TM
F. GreenLine, Model SMD-36
G. Hi-Way Safety, Inc. "Channel Guide Channelizer" Model CGC36
H. Impact Recovery Model D36, with #101 Fixed (Surface-Mount) Base
I. Repo, Models 300 and 400
J. Safe-Hit, Guide Post, Model SH236SMA
K. The Line Connection, "Dura-Post" Model DP36-3 (Permanent)
L. The Line Connection, "Dura-Post" Model DP36-3C (Temporary)
M. Three D Traffic Works "Channelflex" ID No. 522053W

Lane Separation System

A. Bunzl "Flexi-Guide (FG) 300 Curb System"
B. Qwick Kurb, "Klemmfix Guide System"
C. Recycled Technology, Inc. "Safe-Lane System"

CONICAL DELINEATORS, 1070mm {42inches}
(For 700mm Traffic Cones, see Standard Specifications)

A. Bent Manufacturing Company "T-Top"
B. Plastic Safety Systems "Navigator-42"
C. Radiator Specialty Company "Enforcer"
D. Roadmaker Company "Stacker"
E. TrafFix Devices "Grabber"
F. Three D Traffic Works "Ringtop" TD7000, ID No. 742143

OBJECT MARKERS
Type "K", 450mm {18inches}

A. Bunzl, Model FG318PE
B. Carsonite, Model SMD 615
C. FlexStake, Model 701 KM
D. Repo, Models 300 and 400
E. Safe-Hit, Model SH718SMA
F. The Line Connection, Model DP21-4K

Type "K-4" / "Q" Object Markers, 600mm {24inches}

A. Bent Manufacturing "Masterflex" Model MF-360-24
B. Bunzl Extrusion, Model FG324PE

C. Carsonite, Super Duck II
D. FlexStake, Model 701KM
E. Repo, Models 300 and 400
F. Safe-Hit, Models SH8 24SMA_WA and SH8 24GP3_WA
G. The Line Connection, Model DP21-4Q
H. Three D Traffic Works "Q" Marker, ID No. 531702W

8-1.05 CONCRETE BARRIER MARKERS AND TEMPORARY RAILING (TYPE K) REFLECTORS:

Impactable Type

A. ARTUK, "FB"
B. Bunzl Extrusion, Models PCBM-12 and PCBM-T12
C. Duraflex Corp., "Flexx 2020" and "Electriflexx"
D. Hi-Way Safety, Inc., Model GMKRM100
E. Plastic Safety Systems "BAM" Models OM-BARR and OM-BWAR
F. Sun-Lab Technology, "Safety Guide Light Model TM-5"
G. Three D Traffic Works "Roadguide" 9304 Series, ID No.903176(One-Way), ID No. 903215 (Two-Way)

Non-Impactable Type

A. ARTUK, JD Series
B. Plastic Safety Systems "BAM" Models OM-BITARW and OM-BITARA
C. Vega Molded Products, Models GBM and JD

METAL BEAM GUARD RAIL POST MARKERS
(For use to the left of traffic)

A. Bunzl Extrusion, "Mini" (75mm x 254mm) {3inches x 10inches}
B. Creative Building Products, "Dura-Bull, Model 11201"
C. Duraflex Corp., "Railrider"

CONCRETE BARRIER DELINEATORS, 400 mm {16 inches}
(For use to the right of traffic)

A. Bunzl Extrusion, Model PCBM T-16
B. Safe-Hit, Model SH216RBM
C. Sun-Lab Technology, "Safety Guide Light, Model TM16," (75mm x 300mm) {3inches x 12inches}
D. Three D Traffic Works "Roadguide" ID No. 904364 (White), ID No. 904390 (Yellow)

CONCRETE BARRIER-MOUNTED MINI-DRUM (260mm x 360mm x 570mm) {10inches x 14inches x 22inches}

A. Stinson Equipment Company "SaddleMarker"

SOUND WALL DELINEATOR
(Applied vertically. Place top of 75mm x 300mm {3inches x 12inches} reflective element at 1200mm {48inches}above plane of roadway)

A. Bunzl Extrusion, PCBM S-36
B. Sun-Lab Technology, "Safety Guide Light, Model SM12," (75mm x 300mm) {3inches x 12inches}

GUARD RAILING DELINEATOR
(Place top of reflective element at 1200mm {48inches}above plane of roadway)

Wood Post Type, 686mm {27inches}

A. Bunzl Extrusion, FG 427 and FG 527
B. Carsonite, Model 427
C. FlexStake, Model 102 GR
D. GreenLine GRD 27
E. J. Miller Model JMI-375G
F. Safe-Hit, Model SH227GRD
G. Three D Traffic Works "Guardflex" TD9100 Series, ID No. 510476

Steel Post Type

A. Carsonite, Model CFGR-327 with CFGRBK300 Mounting Bracket

RETROREFLECTIVE SHEETING

Channelizers, Barrier Markers, and Delineators

A. Avery Dennison T-6500 Series (Formerly Stimsonite, Series 6200) (For rigid substrate devices only)
B. Avery Dennison WR-6100 Series
C. Nippon Carbide, Flexible Ultralite Grade (ULG) II
D. Reflexite, PC-1000 Metalized Polycarbonate
E. Reflexite, AC-1000 Acrylic
F. Reflexite, AP-1000 Metalized Polyester
G. Reflexite, Conformalight, AR-1000 Abrasion Resistant Coating
H. 3M, High Intensity

Traffic Cones, 330mm {13inches} Sleeves

A. Reflexite SB (Polyester), Vinyl or "TR" (Semi-transparent)

Traffic Cones, 100mm and 150mm {4inches x 6inches} Sleeves

A. Nippon Carbide, Flexible Ultralite Grade (ULG) II
B. Reflexite, Vinyl, "TR" (Semi-transparent) or "Conformalight"

C. 3M Series 3840

Barrels and Drums

A. Avery Dennison WR-6100
B. Nippon Carbide, Flexible Ultralite Grade (ULG) II
C. Reflexite, "Conformalight", "Super High Intensity" or "High Impact Drum Sheeting"
D. 3M Series 3810

Barricades: Type I, Medium-Intensity (Typically Enclosed Lens, Glass-Bead Element)

A. American Decal, Adcolite
B. Avery Dennison, T-1500 and T-1600 series
C. 3M Engineer Grade, Series 3170

Barricades: Type II, Medium-High-Intensity (Typically Enclosed Lens, Glass-Bead Element)

A. Avery Dennison, T-2500 Series
B. Kiwalite Type II
C. Nikkalite 1800 Series

Signs: Type II, Medium-High-Intensity (Typically Enclosed Lens, Glass-Bead Element)

A. Avery Dennison, T-2500 Series
B. Kiwalite, Type II
C. Nikkalite 1800 Series

Signs: Type III, High-Intensity (Typically Encapsulated Glass-Bead Element)

A. Avery Dennison, T-5500 and T-5500A Series
B. Nippon Carbide, Nikkalite Brand Ultralite Grade II
C. 3M Series 3870

Signs: Type IV, High-Intensity (Typically Unmetallized Microprismatic Element)

A. Avery Dennison, T-6500 Series (Formerly Stimsonite Series 6200)
B. Nippon Carbide, Crystal Grade, 94000 Series

Signs: Type VI, Elastomeric (Roll-Up) High-Intensity, without Adhesive

A. Avery Dennison, WU-6014
B. Novabrite LLC, "Econobrite"
C. Reflexite "Vinyl"
D. Reflexite "SuperBright"
E. Reflexite "Marathon"
F. 3M Series RS34 (Orange) and RS20 (Fluorescent orange)

Signs: Type VII, Super-High-Intensity (Typically Unmetallized Microprismatic Element)

A. 3M LDP Series 3924 (Fluorescent Red/Orange)
B. 3M LDP Series 3970

Signs: Type VIII, Super-High-Intensity (Typically Unmetallized Microprismatic Element)

A. Avery Dennison, T-7500 Series

Signs: Type IX, Very-High-Intensity (Typically Unmetallized Microprismatic Element)

A. 3M VIP Series 3981 Diamond Grade (Fluorescent yellow)
B. 3M VIP Series 3983 Diamond Grade (Fluorescent yellow/Green)
C. 3M VIP Series 3990 Diamond

SPECIALTY SIGNS

A. All Sign Products, STOP Sign (All Plastic), 750 mm {30 inches}
B. Relexite "Endurance" Work Zone Sign (with Semi-Rigid Plastic Substrate)

SIGN SUBSTRATE
Fiberglass Reinforced Plastic (FRP)

A. Fiber-Brite
B. Sequentia, "Polyplate"
C. Inteplast Group "InteCel" (13 mm {0.5-inch} for Post-Mounted CZ Signs, 1200 mm {48 inches}or less)

Aluminum Composite

A. Alcan Composites "Dibond Material, 2 mm {0.08-inch}" (for temporary construction signs only)
B. Mitsubishi Chemical America, Alpolic 350 (for temporary construction signs only)

SECTION 9. DESCRIPTION OF WORK

This project will place new hot mix asphalt on South Bay Boulevard, within the County of San Luis Obispo. Work includes cold plane asphalt concrete road surfaces, placing hot mix asphalt overlay, fog seal, replacing detector loops, installing curb ramps, and other such items or detail work not mentioned herein that are required by the Plans, the Standard Specifications, Standard Plans, or these Special Provisions.

THIS PAGE LEFT BLANK INTENTIONALLY

SECTION 10. CONSTRUCTION DETAILS

10-1.01 Order of Work: Order of work shall conform to the provisions in Section 5-1.05, "Order of Work," of the Standard Specifications and these Special Provisions.

The work shall conform to the inherent stages of construction described in the Contractor's Progress Schedule as accepted by the Engineer. Work may proceed that is not in conflict with work in preceding stages, provided satisfactory progress is maintained in said preceding stages of construction.

After having received written notice to proceed, Contractor shall install all the required construction areas signs and Temporary Fence (Type ESA) as the first item of work in accordance with these Special Provisions. No other work will be allowed until the placement of the construction area signs and temporary fence (type ESA) has been completed.

Prior to any ground disturbing activity the County's qualified biologist (Eric Weir 788-2766) shall conduct a mandatory training session for the contractor's workers and all subcontractors to familiarize all construction personnel with the identification of Morro Shoulderband Snail (MSS) and its habitat, and will include:

Natural history, including description and photos
Listing status
Legal protections under the Endangered Species Act
Penalties for violations
Specific measures being implemented to protect MSS
The project does not have authorization to "take" MSS or other listed species ("take" includes handling and relocating)

Prior to any ground disturbing activity, the contractor shall install (ESA) fencing at environmentally sensitive areas, to prevent any disturbance of MSS habitat (i.e. ice plant). ESA fencing will be maintained during construction, and will not be removed until all project disturbance which could impact MSS habitat has concluded.

If any archaeological materials are unearthed during construction (shell, old bottles, stone tools, bone, etc.) stop work in the vicinity of the find and notify the on-site monitor or Public Works Environmental Programs Division. The following note shall apply:

1.) Construction activities shall cease and the Public Works Environmental Program Division shall be notified so that the extent and location of discovered materials may be evaluated by a qualified archaeologist and/or paleontologist, and disposition of artifacts may be accomplished in accordance with state and federal law. The county shall implement the mitigation as required by the Environmental Coordinator.

2.) In the event archaeological resources are found to include human remains, or in any other case where human remains are discovered during construction, the County Coroner is to be notified in addition to the Public Works Environmental Programs

Division so that proper disposition may be accomplished.

After having received the written Notice to Proceed, the Contractor shall place and activate the changeable message boards for advance warning to motorists in accordance with these Special Provisions. No traffic closures will be allowed until the message boards have been in operation for 7 calendar days.

No lane closures on South Bay Boulevard will be permitted between the hours of 0700-0800 and 1500-1800.

No Lane closures will be permitted on Friday afternoon preceding three-day weekend of a Federal holiday.

The Contractor's attention is directed to the provisions of Section 10-1.03, "Water Pollution Control," of these Special Provisions, requiring acceptance of the WPCP and installation of specified BMPs before any work is performed.

Schedule cold planning activities so that not more than 48 hours elapses between the time the pavement is cold planed and the HMA is placed and so that no cold planed areas are exposed during weekends or designated holidays.

Loop detectors shall be installed prior to placement of hot mix asphalt (HMA) overlay.

Before applying asphaltic emulsion or binder that would obliterate existing traffic stripes, the Contractor shall place temporary raised pavement markers on the existing traffic stripes as specified in "Temporary Pavement Delineation" of these special provisions.

The Contractor's attention is directed to the provisions of Sections 10-1.09, "Maintaining Traffic," 10-1.10, "Existing Highway Facilities," 10-1.12 "Hot Mix Asphalt Paving," and other requirements of these Special Provisions regarding order of work.

Full compensation for conforming to these requirements shall be considered as included in the prices paid for the various items of work and no additional compensation will be allowed therefor.

10-1.02 Temporary Fences (ESA):

General:

Summary

This work includes constructing, maintaining, and removing temporary fence (Type ESA). Temporary fence (Type ESA) provides a visible boundary adjacent to protected areas such as an environmentally sensitive area.

Actual location of Temporary Fence (ESA) will be marked at the beginning of the job by County staff. Contractor shall immediately install fence at marked limits. Additional County staff time to remark said fence shall result in deductions to Contractor payments.

Signs are not required for temporary fence (Type ESA).

Submittals

Submit a Certificate of Compliance as specified in Section 6-1.07, "Certificates of Compliance" of the Standard Specifications for:

1. High visibility fabric
2. Safety cap for metal posts

Materials:

High Visibility Fabric

High visibility fabric for temporary fence (Type ESA) must consist of one of the following:

1. Polyethylene
2. Polypropylene
3. Combined polyethylene and polypropylene

Sample high visibility fabric under ASTM D 4354, Procedure C.

Test high visibility fabric under ASTM D 4759. All properties must be based on Minimum Average Roll Value.

Identify, store, and handle high visibility fabric rolls and samples under ASTM D 4873.

High visibility fabric must:

1. Contain ultraviolet inhibitors
2. Comply with the requirements shown in the following table:

Property	Specifications	Requirements
Width, inches, Min	Measured	48
Opening size inches	Measured	1" x 1" (Min) 2" x 4" (Max)
Color	Observed	Orange
Roll weight, lb Min for 4’ x 100’ roll	Measured	12
Tensile strength, lb Min, machine direction x cross direction	ASTM D 4595	225 x 95
Ultraviolet Degradation - Percent of original unexposed grab breaking load 500 hr, minimum	ASTM D 4355	70

Posts

Posts must be wood or steel.

Wood posts must be:

1. Untreated fir, redwood, cedar, or pine and cut from sound timber
2. Straight and free of loose or unsound knots and other defects that would render the stakes unfit for use
3. Pointed on the end to be driven into the ground
4. At least 2" x 2" in size and 6 feet long

Steel posts must:

1. Have a "U," "T," "L," or other cross sectional shape that can resist failure from lateral loads.
2. Be pointed on the end to be driven into the ground.
3. Weigh at least 0.75-pound per foot.
4. Be at least 6 feet long.
5. Have a safety cap attached to the exposed end. The safety cap must be yellow, orange or red plastic and fit snugly to the metal post.

Construction:
General

Install temporary fence (Type ESA):

1. With high visibility fabric, posts, and fasteners as follows:
   1.1. If wood posts are used, fasteners must be staples or nails
   1.2. If steel posts are used, fasteners must be tie wires or locking plastic fasteners

1.3. Spacing of the fasteners must be no more than 8 inches apart

2. Before clearing and grubbing activities
3. From outside of the protected area
4. With posts spaced 8 feet apart and embedded at least 16 inches in the soil

If trees and other plants need protection, install fence to:

1. Enclose the foliage canopy (drip line) of protected plants
2. Protect visible roots from encroachment
3. Fence shall be constructed a sufficient distance from protected plants to enclose all of the foliage canopy and visible roots of the plants. All trees to remain on-site that are within fifty feet of construction or grading activities shall be marked for protection (e.g. flagging) and their root zone fenced prior to any grading. The outer edge of the tree root zone is 1-1/2 times the distance from the trunk to the drip line of the tree.

Maintenance

Maintain temporary fence (Type ESA) by:

1. Keeping posts in a vertical position
2. Reattaching fabric to posts
3. Replacing damaged sections of fabric
4. Replacing and securing signs

Removal

When the Engineer determines that temporary fence (Type ESA) is no longer required, remove and dispose of it under Section 7-1.13, "Disposal of Material Outside the Highway Right of Way," of the Standard Specifications.

Backfill and repair ground disturbance caused by the installation and removal of temporary fence (Type ESA), including holes and depressions, under Section 15-1.02, "Preservation of Property," of the Standard Specifications.

Measurement and Payment:

“TEMPORARY FENCE (TYPE ESA)” is measured and paid for by the linear foot in the same manner specified for fence (Type BW or WM) in Section 80, "Fences," of the Standard Specifications.

The contract price paid per linear foot for “TEMPORARY FENCE (TYPE ESA)” includes full compensation for furnishing all labor, materials, tools, equipment, and incidentals, and for doing all the work involved in constructing the temporary fence (Type ESA), complete in place, including maintenance, removal of materials, and backfilling and repairing holes, depressions and other ground disturbance, as shown on the plans, as specified in the Standard Specifications and these Special Provisions, and as ordered by the Engineer.

10-1.03 Water Pollution Control

10-1.03A General:

Summary

Water pollution control work applies to projects where work activities result in less than 1 acre of soil disturbance.

Manage work activities to reduce the discharge of pollutants to surface waters, groundwater, or municipal separate storm sewer systems including contract work item for Prepare Water Pollution Control Program. Water Pollution Control Program (WPCP) preparation includes obtaining WPCP acceptance, amending the WPCP, and installation, maintenance, monitoring, and inspecting water pollution control practices at the job site.

Do not begin work until the WPCP is accepted.

Definitions and Abbreviations

active and inactive areas: (1) Active areas have soil disturbing work activities occurring at least once within 14 days, and (2) Inactive areas are areas that have not been disturbed for at least 15 days.
BMPs: Best Management Practices are water pollution control practices.
construction phase: Construction phases are (1) Highway Construction including work activities for building roads and structures, (2) Plant Establishment including maintenance on vegetation installed for final stabilization, and (3) Suspension where work activities are suspended and areas are inactive.
Preparation Manual: The Department's "Storm Water Pollution Prevention Plan and Water Pollution Control Program Preparation Manual."
NPDES: National Pollutant Discharge Elimination System
RWQCB: Regional Water Quality Control Board
SWPPP: Storm Water Pollution Prevention Plan
SWRCB: State Water Resources Control Board
Water Pollution Control Manager: The Water Pollution Control Manager implements water pollution control work described in the WPCP and oversees revisions and amendments to the WPCP.
WPCP: Water Pollution Control Program

Submittals

Within 10 calendar days, not including Saturdays, Sundays, and legal holidays, of receipt of the executed contract, start the following process for WPCP acceptance:

1. Submit 2 copies of the WPCP and allow 5 days for the Engineer's review. If revisions are required, the Engineer provides comments and specifies the date that the review stopped.
2. Change and resubmit the WPCP within 5 days of receipt of the Engineer's comments. The Engineer's review resumes when the complete WPCP is resubmitted.
3. When the Engineer accepts the WPCP, submit an electronic and 3 printed copies of the accepted WPCP.

Submit:

1. Stormwater training records including training dates and subject for employees and subcontractors. Include dates and subject for ongoing training, including tailgate meetings.
2. Employee training records:
    2.1. Within 5 days of WPCP acceptance for existing employees
    2.2. Within 5 days of training for new employees
    2.3. At least 5 days before subcontractors start work for subcontractor's employees

Submit as required:

1. BMP Status Report
2. Inspection Reports

At least 5 days before operating any construction support facility:

1. Submit a plan showing the location and quantity of water pollution control practices associated with the construction support facility
2. If you will be operating a batch plant or a crushing plant under the General Industrial Permit, submit a copy of the NOI approved by the RWQCB and the WPCP approved by the RWQCB.

Quality Control and Assurance:

Training
Provide storm water training for:

1. Project managers
2. Supervisory personnel
3. Employees involved with water pollution control work

Train all employees, including subcontractor's employees, in the following subjects:

1. Water pollution control rules and regulations
2. Implementation and maintenance for:
    2.1. Temporary Soil Stabilization
    2.2. Temporary Sediment Control
    2.3. Tracking Control
    2.4. Wind Erosion Control
    2.5. Material pollution prevention and control
    2.6. Waste management
    2.7. Non-storm water management
    2.8. Identifying and handling hazardous substances
    2.9. Potential dangers to humans and the environment from spills and leaks or exposure to toxic or hazardous substances

Employees must receive initial water pollution control training before working on the

job.

Conduct weekly training meetings covering:

1. Water pollution control BMPs deficiencies and corrective actions
2. BMPs that are required for work activities during the week
3. Spill prevention and control
4. Material delivery, storage, use, and disposal
5. Waste management
6. Non-storm water management procedures

You may obtain copies of the Preparation Manual from the Publication Distribution Unit. The mailing address for the Publication Distribution Unit is:

State of California
Department of Transportation
Publication Distribution Unit
1900 Royal Oaks Drive
Sacramento, California 95815
Telephone: (916) 445-3520

For the Preparation Manual and other water pollution control references, go to the Department's "Construction Storm Water and Water Pollution Control" web site at:

http://www.dot.ca.gov/hq/construc/stormwater/stormwater1.htm

If you operate construction support facilities, protect storm water systems or receiving waters from the discharge of potential pollutants by using water pollution control practices.

Construction support facilities include:

1. Staging areas
2. Storage yards for equipment and materials
3. Mobile operations
4. Batch plants for PCC and HMA
5. Crushing plants for rock and aggregate
6. Other facilities installed for your convenience such as haul roads

If you operate a batch plant to manufacture PCC, HMA, or other material; or a crushing plant to produce rock or aggregate; obtain coverage under the General Industrial Permit. You must be covered under the General Industrial Permit for batch plants and crushing plants located:

1. Outside of the job site
2. Within the job site that serve one or more contracts

Discharges from manufacturing facilities such as batch plants must comply with the general waste discharge requirements for Order No. 97-03-DWQ, NPDES General Permit No. CAS000001, issued by the SWRCB for "Discharge of Stormwater Associated with Industrial Activities Excluding Construction Activities." The General Industrial Permit is available at:

http://www.waterboards.ca.gov/

Water Pollution Control Manager

The Contractor shall designate in writing a Water Pollution Control Manager (WPCM). The Contractor shall submit a statement of qualifications describing the training, work history, and expertise of the proposed WPCM. The WPCM must have at least one of the following qualifications:

1. Certified Erosion, Sediment and Storm Water Inspector (CESSWI)™ registered through Enviro Cert International, Inc.
2. Certified Inspector of Sediment and Erosion Control (CISEC) registered through CISEC, Inc.
3. Qualifications described in the Permit (Order No. 2009-009-DWQ, NPDES No. CAS000002) for a QSD.
4. Department approved storm water management training described in the Department's "Construction Storm Water and Water Pollution Control" web site

At the job site, the Water Pollution Control Manager must:

1. Be responsible for water pollution control work
2. Be the primary contact for water pollution control work
3. Oversee the maintenance of water pollution control practices
4. Oversee and enforce hazardous waste management practices
5. Have the authority to mobilize crews to make immediate repairs to water pollution control practices
6. Ensure that all employees have current water pollution control training
7. Implement the accepted WPCP and amend the WPCP when required

Water Pollution Control Manager must oversee:

1. Inspections of water pollution control practices identified in the WPCP
2. Inspections for visual monitoring

You may designate one manager to prepare the WPCP and a different manager to implement the plan. The WPCP preparer shall meet the training requirements for the WPCM.

10-1.03B Water Pollution Control Program:

The work includes preparing a WPCP, obtaining WPCP acceptance, amending the WPCP, and reporting on water pollution control practices at the job site. The WPCP must comply with the Preparation Manual. The WPCP is required by the provisions in

Section 7-1.01G, "Water Pollution," of the Standard Specifications, and these Special Provisions.

You may request, or the Engineer may order, changes to the water pollution control work. Changes may include addition of new water pollution control practices. Additional water pollution control work is change order work.

The WPCP must include water pollution control practices:

1. For storm water and non-stormwater from areas outside of the job site related to project work activities such as:
   1.1. Staging areas
   1.2. Storage yards
   1.3. Access roads
2. For activities or mobile operations related to contractor obtained NPDES permits
3. Construction support facilities

WPCP Amendments
You must amend the WPCP when:

1. Changes in work activities could affect the discharge of pollutants
2. Water pollution control practices are added by change order work
3. Water pollution control practices are added by your discretion

If you amend the WPCP, follow the same process specified for WPCP acceptance.

Retain a printed copy of the accepted WPCP at the job site.

WPCP Schedule
The WPCP schedule must:

1. Describe when work activities will be performed that could cause the discharge of pollutants in storm water
2. Describe water pollution control practices associated with each construction phase
3. Identify soil stabilization and sediment control practices for disturbed soil areas

10-1.03C Implementation Requirements:

Monitor the National Weather Service Forecast Office on a daily basis. For forecasts, go to:

http://www.srh.noaa.gov/forecast

Whenever you or the Engineer identifies a deficiency in the implementation of the accepted WPCP:

1. Correct the deficiency immediately, unless the Engineer authorizes an agreed date for correction
2. Correct the deficiency before precipitation occurs

If you fail to correct the deficiency by the agreed date or before the onset of precipitation, the County may correct the deficiency and deduct the cost of correcting the deficiency from payment.

If you fail to comply with "Water Pollution Control" of these Special Provisions, the Engineer will order a suspension of work until the project complies with the requirements of "Water Pollution Control" of these Special Provisions.

The Contractor's responsibility for WPCP implementation shall continue throughout any temporary suspension of work ordered in conformance with the provisions in Section 8-1.05, "Temporary Suspension of Work," of the Standard Specifications.

Install water pollution control practices within 15 days or before predicted precipitation, whichever occurs first.

If actions for the Contractor's convenience disturb one or more acres, the Contractor must pay all costs and be responsible for all delays associated with complying with Order No. 2009-0009-DWQ, NPDES General Permit No. CAS000002, issued by the SWRCB for "Storm Water Discharges Associated with Construction and Land Disturbance Activities." The General Permit is available at:

http://www.waterboards.ca.gov

<u>Inspection</u>
The Water Pollution Control Manager must oversee inspections for water pollution control practices identified in the WPCP:

1. Before a forecasted storm
2. After precipitation that causes site runoff
3. At 24-hour intervals during extended precipitation
4. On a predetermined schedule, a minimum of once a week

The Water Pollution Control Manager must oversee daily inspections of:

1. Storage areas for hazardous materials and wastes
2. Hazardous waste disposal and transporting activities
3. Hazardous material delivery and storage activities
4. Water pollution control practices specified under "Construction Site Management" of these Special Provisions

The Water Pollution Control Manager must use the Storm Water Site Inspection Report provided in the Preparation Manual.

The Water Pollution Control Manager must prepare BMP status reports that include the following:

1. Location and quantity of installed water pollution control practices
2. Location and quantity of disturbed soil for the active or inactive areas

Within 24 hours of finishing the weekly inspection, the Water Pollution Control Manager must submit:

1. Copy of the completed site inspection report
2. Copy of the BMP status report

Reporting Requirements
If the following occur, notify the Engineer within 6 hours:

1. You identify discharges into receiving waters or drainage systems causing or potentially causing pollution
2. The job receives a written notice or order from a regulatory agency

No later than 48 hours after the conclusion of a storm event resulting in a discharge, a non-stormwater discharge, or receiving the notice or order, submit:

1. Date, time, location, and nature of the activity, type of discharge and quantity, and the cause of the notice or order
2. Water pollution control practices used before the discharge, or before receiving the notice or order
3. Description of water pollution control practices and corrective actions taken to manage the discharge or cause of the notice

10-1.03D Payment:

If you fail to comply with "Water Pollution Control" of these Special Provisions or fail to implement water pollution control practices during each estimate period, the County withholds 25 percent from progress payment.

Withholds for failure to perform water pollution control work are in addition to all other withholds provided for in the contract. The County returns performance-failure withholds in the progress payment following the correction for noncompliance.

Full compensation for Water Pollution Control, including furnishing all labor, materials, tools, equipment, and incidentals and for doing all the work involved in preparing, obtaining acceptance of, and amending the WPCP and inspecting water pollution control practices as specified in the Standard Specifications and these Special Provisions, and as directed by the Engineer, shall be included in the contract price paid for the various items of work involved and no separate payment will be made therefore.

The County does not pay for implementation of water pollution control practices in areas

outside the right of way not specifically provided for in the drawings or in the Special Provisions.

The County does not pay for water pollution control practices installed at construction support facilities.

10-1.04 Construction Site Management

10-1.04A General

Summary

This work includes controlling potential sources of water pollution before they come in contact with storm water systems or watercourses.

Control material pollution and manage waste and non-stormwater at the job site by implementing effective handling, storage, use, and disposal practices.

For information on documents specified in these Special Provisions, refer to the Department's Preparation Manual, Dewatering Guide, and BMP Manual.

Preparation Manual, Dewatering Guide, and BMP Manual are available from the Department's Construction Storm Water and Water Pollution Control web site at:

http://www.dot.ca.gov/hq/construc/stormwater/stormwater1.htm

Definitions and Abbreviations

active and inactive areas: (1) Active areas have soil disturbing work activities occurring at least once within 14 days, and (2) Inactive areas are areas that have not been disturbed for at least 15 days.

BMP Manual: The Department's Construction Site Best Management Practices (BMP) Manual.

CDPH: California Department of Public Health

Dewatering Guide: The Department's Field Guide to Construction Site Dewatering.

ELAP: Environmental Laboratory Accreditation Program

Minor spills: Small quantities of oil, gasoline, paint, or other material that are small enough to be controlled by a first responder upon discovery of the spill.

MSDS: Material Safety Data Sheet

Preparation Manual: The Department's Storm Water Pollution Prevention Plan (SWPPP) and Water Pollution Control Program (WPCP) Preparation Manual.

Semi-significant spills: Spills that can be controlled by a first responder with help from other personnel.

Significant or hazardous spills: Spills that cannot be controlled by construction personnel.

WPC: Water Pollution Control

WPC Manager: Water Pollution Control Manager as defined under "Water Pollution Control" of these Special Provisions.

Submittals

Submit the following:

1. MSDS at least 5 days before material is used or stored
2. Monthly inventory records for material used or stored
3. Copy of written approval to discharge into a sanitary sewer system at least 5 days before beginning discharge activities

10-1.04B Construction

Spill Prevention and Control

Implement spill and leak prevention procedures for chemicals and hazardous substances stored at the job site. If you spill or leak chemicals or hazardous substances at the job site, you are responsible for all associated cleanup costs and related liability.

As soon as it is safe, contain and clean up spills of petroleum products, sanitary and septic waste substances listed under CFR Title 40, Parts 110, 117, and 302.

Minor Spills

Clean up minor spills using the following procedures:

1. Contain the spread of the spill
2. Recover the spilled material by absorption
3. Clean the contaminated area
4. Dispose of the contaminated material promptly and properly

Semi-significant Spills

Clean up semi-significant spills immediately by the following procedures:

1. Contain the spread of the spill
2. Recover the spilled material using absorption whenever a spill occurs on a paved surface or an impermeable surface
3. Contain the spill with an earthen dike and dig up the contaminated soil for disposal whenever a spill occurs on soil
4. If the spill occurs during precipitation, cover the spill with plastic or other material to prevent contaminated runoff
5. Dispose of the contaminated material promptly and properly

Significant or Hazardous Spills

Immediately notify qualified personnel of significant or hazardous spills. Do not let construction personnel attempt to clean up the spill until qualified staff have arrived. Do the following:

1. Notify the Engineer and follow up with a written report
2. Obtain the services of a spills contractor or hazardous material team immediately
3. Notify the local emergency response team by dialing 911 and county officials at the emergency phone numbers kept at the job site
4. Notify the Governor's Office of Emergency Services Warning Center at (805) 852-7550
5. Notify the National Response Center at (800) 424-8802 regarding spills of Federal reportable quantities under CFR Title 40, Parts 110, 119, and 302
6. Notify other agencies as appropriate, including:

6.1. Fire Department
6.2. Public Works Department
6.3. Coast Guard
6.4. Highway Patrol
6.5. County Sheriff Department
6.6. Department of Toxic Substances
6.7. California Division of Oil and Gas
6.8. Cal OSHA
6.9. Regional Water Resources Control Board

Report minor, semi-significant, and significant spills to the WPC Manager. The WPC Manager must notify the Engineer immediately. The WPC Manager must oversee and enforce proper spill prevention and control measures.

Prevent spills from entering storm water runoff before and during cleanup. Do not bury spills or wash spills with water.

Keep material or waste storage areas clean, well organized, and equipped with enough cleanup supplies for the material being stored.

10-1.04C Material Management

General
Material must be delivered, used, and stored for this job in a way that minimizes or eliminates discharge of material into the air, storm drain systems, and watercourses.

Implement the practices described under "Material Management" of these Special Provisions while taking delivery of, using, or storing any of the following materials:
1. Hazardous chemicals including acids, lime, glues, adhesives, paints, solvents, and curing compounds
2. Soil stabilizers and binders
3. Fertilizers
4. Detergents
5. Plaster
6. Petroleum materials including fuel, oil, and grease
7. Asphalt components and concrete components
8. Pesticides and herbicides

Employees trained in emergency spill cleanup procedures must be present during the unloading of hazardous materials or chemicals.

If practicable, use less hazardous materials.

Material Storage
Use the following material storage procedures:
1. Store liquids, petroleum materials, and substances listed in CFR Title 40, Parts 110, 117, and 302 as specified by the Department, and place them in secondary containment facilities.

2. Secondary containment facilities must be impervious to the materials stored there for a minimum contact time of 72 hours.
3. Cover secondary containment facilities during non-working days and when precipitation is predicted. Secondary containment facilities must be adequately ventilated.
4. Keep secondary containment facility free of accumulated rainwater or spills. After precipitation, or in the event of spills or leaks, collect accumulated liquid and place into drums within 24 hours. Handle these liquids as hazardous waste under "Hazardous Waste" of these Special Provisions unless testing determines them to be nonhazardous.
5. Do not store incompatible materials, such as chlorine and ammonia, in the same secondary containment facility.
6. Store materials in the original containers with the original material labels maintained in legible condition. Replace damaged or illegible labels immediately.
7. Secondary containment facilities must have the capacity to contain precipitation from a 24-hour-long, 25-year storm, and 10 percent of the aggregate volume of all containers, or entire volume of the largest container within the facility, whichever is greater.
8. Store bagged or boxed material on pallets. Protect bagged or boxed material from wind and rain during non-working days and while precipitation is predicted.
9. Provide sufficient separation between stored containers to allow for spill cleanup or emergency response access. Storage areas must be kept clean, well organized, and equipped with cleanup supplies appropriate for the materials being stored.
10. Repair or replace perimeter controls, containment structures, covers, and liners as necessary. Inspect storage areas before and after precipitation, and at least weekly during other times.

Stockpile Management

Use the following stockpile management procedures:

1. Reduce or eliminate potential water pollution from stockpiled material including soil, paving material, and pressure treated wood.
2. Locate stockpiles:
   - 2.1. If within the floodplain, at least 100 feet from concentrated flows of storm water, drainage courses, and inlets unless approved
   - 2.2. If outside the floodplain, at least 50 feet from concentrated flows of storm water, drainage courses, and inlets unless approved

Install WPC practices within 15 days or before predicted precipitation, whichever occurs first.

Active and inactive soil stockpiles must be:

1. Covered with soil stabilization measures, plastic sheeting, or geosynthetic fabric
2. Surrounded with a linear sediment barrier

Portland cement concrete rubble, AC, HMA, AC and HMA rubble, aggregate base or aggregate sub-base stockpiles must be:

1. Covered with plastic sheeting, or geosynthetic fabric
2. Surrounded with a linear sediment barrier

Pressure treated wood stockpiles must be:
1. Placed on pallets
2. Covered with impermeable material

Cold mix asphalt concrete stockpiles must be:
1. Placed on impervious surface
2. Covered with impermeable material
3. Protected from run-on and runoff

Control wind erosion year round under Section 10, "Dust Control" of the Standard Specifications.

Repair or replace linear sediment barriers and covers as needed to keep them functioning properly. If sediment accumulates to 1/3 of the linear sediment barrier height, remove the sediment.

10-1.04D Waste Management

Solid Waste

Do not allow litter or debris to accumulate anywhere at the job site, including storm drain grates, trash racks, and ditch lines. Pick up and remove trash and debris from the job site at least once a week. The WPC Manager must monitor solid waste storage and disposal procedures at the job site.

If practicable, recycle nonhazardous job site waste and excess material. If recycling is not practicable, disposal must comply with Section 7-1.13, "Disposal of Material Outside the Highway Right of Way" of the Standard Specifications.

Furnish enough closed-lid dumpsters of sufficient size to contain any solid waste generated by work activities. When the refuse reaches the fill line, empty the dumpsters. Dumpsters must be watertight. Do not wash out dumpsters at the job site. Furnish additional containers and pick up dumpsters more frequent during the demolition phase of construction.

Solid waste includes:
1. Brick
2. Mortar
3. Timber
4. Metal scraps
5. Sawdust
6. Pipe
7. Electrical cuttings
8. Non-hazardous equipment parts
9. Styrofoam and other packaging materials
10. Vegetative material and plant containers from highway planting
11. Litter and smoking material, including litter generated randomly by the public
12. Other trash and debris

Furnish and use trash receptacles at the job site yard, field trailers, and locations where workers gather for lunch and breaks.

Hazardous Waste

Use hazardous waste management practices if waste is generated at the job site from the following substances:

1. Petroleum products
2. Asphalt products
3. Concrete curing compound
4. Pesticides
5. Acids
6. Paints
7. Stains
8. Solvents
9. Wood preservatives and treated posts
10. Roofing tar
11. Road flares
12. Lime
13. Glues and adhesives
14. Materials classified as hazardous by California Code of Regulations, Title 22, Division 4.5; or listed in CFR Title 40, Parts 110, 117, 261, or 302

The WPC Manager must oversee and enforce hazardous waste management practices. Minimize the production of hazardous materials and hazardous waste at the job site. If damaged, repair or replace perimeter controls, containment structures, and covers.

If hazardous material levels are unknown, use a laboratory certified by ELAP under CDPH to sample and test waste to determine safe methods for storage and disposal.

Separate potentially hazardous waste from nonhazardous waste at the job site. Hazardous waste must be handled, stored, and disposed of under California Code of Regulations, Title 22, Division 4.5, Section 66262.34; and in CFR Title 49, Parts 261, 262, and 263.

Store hazardous waste in sealed containers constructed and labeled with the contents and date accumulated under California Code of Regulations, Title 22, Division 4.5; and in CFR Title 49, Parts 172, 173, 178, and 179. Keep hazardous waste containers in temporary containment facilities under "Material Storage" of these Special Provisions.

Furnish containers with adequate storage volume at convenient locations for hazardous waste collection. Do not overfill hazardous waste containers. Do not mix hazardous wastes. Do not allow potentially hazardous waste to accumulate on the ground. Store containers of dry waste that are not watertight on pallets. Store hazardous waste away from storm drains, watercourses, moving vehicles, and equipment.

Clean water based or oil based paint from brushes or equipment within a contained area and in a way that does not contaminate soil, watercourses, and storm drain systems. Handle and dispose of the following as hazardous waste: paints, thinners, solvents,

residues, and sludges that cannot be recycled or reused. When thoroughly dry, dispose of the following as solid waste: dry, latex paint and paint cans, used brushes, rags, absorbent materials, and drop cloths.

Dispose of hazardous waste within 90 days of being generated. Use a licensed hazardous waste transporter to take hazardous waste to a Class I Disposal Site. Submit a copy of uniform hazardous waste manifest forms within 24 hours of transporting hazardous waste.

The WPC Manager must inspect the following daily:
1. Storage areas for hazardous materials and wastes
2. Hazardous waste disposal and transporting activities
3. Hazardous material delivery and storage activities

Contaminated Soil
Identify contaminated soil from spills or leaks by noticing discoloration, odors, or differences in soil properties. Soil with evidence of contamination must be sampled and tested by a laboratory certified by ELAP.

If levels of contamination are found to be hazardous, handle and dispose of the soil as hazardous waste.

Prevent the flow of water, including ground water, from mixing with contaminated soil by using one or a combination of the following measures:
1. Berms
2. Cofferdams
3. Grout curtains
4. Freeze walls
5. Concrete seal course

If water mixes with contaminated soil and becomes contaminated, sample and test the water using a laboratory certified by ELAP. If levels of contamination are found to be hazardous, handle and dispose of the water as hazardous waste.

Concrete Waste
Use practices that will prevent the discharge of portland cement concrete, AC, or HMA waste into storm drain systems or watercourses.

Collect and dispose of portland cement concrete, AC, or HMA waste at locations where:
1. Concrete material, including grout, is used
2. Concrete dust and debris result from demolition
3. Sawcutting, coring, grinding, grooving, or hydro-concrete demolition of portland cement concrete, AC, or HMA creates a residue or slurry
4. Concrete truck or other concrete-coated equipment is cleaned at the job site

Sanitary and Septic Waste
Do not bury or discharge wastewater from sanitary or septic systems within County right-of-way. The WPC Manager must inspect sanitary or septic waste storage and

monitor disposal procedures at least weekly. Sanitary facilities that discharge to the sanitary sewer system must be properly connected and free from leaks. Place sanitary facilities at least 50 feet away from storm drains, watercourses, and flow lines.

Obtain written approval from the local health agency, city, county, and sewer district before discharging from a sanitary or septic system directly into a sanitary sewer system, and submit a copy to the Engineer. Comply with local health agency provisions while using an on-site disposal system.

Liquid Waste

Use practices that will prevent job site liquid waste from entering storm drain systems or watercourses. Liquid wastes include the following:

1. Drilling slurries or fluids
2. Grease-free or oil-free wastewater or rinse water
3. Dredgings, including liquid waste from drainage system cleaning
4. Liquid waste running off a surface including wash or rinse water
5. Other non-stormwater liquids not covered by separate permits

Hold liquid waste in structurally sound, leak proof containers such as:

1. Roll-off bins
2. Portable tanks

Liquid waste containers must be of sufficient quantity and volume to prevent overflow, spills and leaks.

Store containers:

1. At least 50 feet from moving vehicles and equipment
2. If within the floodplain, at least 100 feet from concentrated flows of storm water, drainage courses, watercourses, and storm drain inlets unless approved
3. If outside the floodplain, at least 50 feet from concentrated flows of storm water, drainage courses, watercourses, and storm drain inlets unless approved

Remove and dispose of deposited solids from sediment traps under "Solid Waste" of these Special Provisions unless the Engineer approves another method.

Liquid waste may require testing to determine hazardous material content before disposal.

Drilling fluids and residue must be disposed of outside the highway right-of-way.

If an approved location is available within the job site, fluids and residue exempt under California Code of Regulations, Title 23, Section 2511(g) may be dried by evaporation in a leak proof container. Dispose of remaining solid waste under "Solid Waste" of these Special Provisions.

10-1.04E Non-Storm Water Management

Water Control and Conservation

Manage water used for work activities to prevent erosion or discharge of pollutants into storm drain systems or watercourses. Obtain approval before washing anything at the job site with water that could discharge into a storm drain system or watercourse. Report discharges immediately.

If water is used at the job site, implement water conservation practices. Inspect irrigation areas. Adjust watering schedules to prevent erosion, excess watering, or runoff. Shut off water source to broken lines, sprinklers, or valves, and repair breaks within 24 hours. If possible, reuse water from waterline flushing for landscape irrigation. Sweep and vacuum paved areas; do not wash them with water.

Direct job site water runoff, including water from water line repair, to areas where it can infiltrate into the ground and not enter storm drain systems or watercourses. Do not allow spilled water to escape water truck filling areas. If possible, direct water from off-site sources around the job site. Minimize the contact of off-site water with job site water.

Illegal Connection and Discharge Detection and Reporting

Inspect the job site and the site perimeter before starting work for evidence of illegal connections, discharges, or dumping. After starting work, inspect the job site and perimeter on a daily schedule.

Whenever illegal connections, discharges, or dumping are discovered, notify the Engineer immediately. Take no further action unless ordered by the Engineer. Assume unlabeled or unidentifiable material is hazardous.

Look for the following evidence of illegal connections, discharges, or dumping:

1. Debris or trash piles
2. Staining or discoloration on pavement or soils
3. Pungent odors coming from drainage systems
4. Discoloration or oily sheen on water
5. Stains or residue in ditches, channels or drain boxes
6. Abnormal water flow during dry weather
7. Excessive sediment deposits
8. Nonstandard drainage junction structures
9. Broken concrete or other disturbances near junction structures

Vehicle and Equipment Cleaning

Limit vehicle and equipment cleaning or washing at the job site except what is necessary to control vehicle tracking or hazardous waste. Notify the Engineer before cleaning vehicles and equipment at the job site with soap, solvents, or steam. Contain and recycle or dispose of resulting waste under "Liquid Waste" or "Hazardous Waste" of these Special Provisions, whichever is applicable. Do not use diesel to clean vehicles or equipment, and minimize the use of solvents.

Clean or wash vehicles and equipment in a structure equipped with disposal facilities. If using a structure is not possible, clean or wash vehicles and equipment in an outside area. The outside area must be:

1. Paved with AC, HMA, or concrete paving

2. Surrounded by a containment berm
3. Equipped with a sump to collect and dispose of wash water
4. If within the floodplain, located at least 100 feet from concentrated flows of storm water, drainage courses, watercourses, and storm drain inlets unless approved
5. If outside the floodplain, located at least 50 feet from concentrated flows of storm water, drainage courses, watercourses, and storm drain inlets unless approved

When washing vehicles or equipment with water, use as little water as possible. Hoses must be equipped with a positive shutoff valve.

Discharge liquid from wash racks to a recycle system or to another approved system. Remove liquids and sediment as necessary.

The WPC Manager must inspect vehicle and equipment cleaning facilities:
1. Daily if vehicle and equipment cleaning occurs daily
2. Weekly if vehicle and equipment cleaning does not occur daily

Vehicle and Equipment Fueling and Maintenance
If practicable, perform maintenance on vehicles and equipment off the job site.

If fueling or maintenance must be done at the job site, designate a site, or sites, and obtain approval before using. Minimize mobile fueling or maintenance.

If vehicle and equipment fueling and maintenance must be done at the job site, areas for the following activities must be:
1. On level ground
2. Protected from storm water run-on
3. If within the floodplain, located at least 100 feet from concentrated flows of storm water, drainage courses, watercourses, and storm drain inlets unless approved
4. If outside the floodplain, located at least 50 feet from concentrated flows of storm water, drainage courses, watercourses, and storm drain inlets unless approved

Use containment berms or dikes around the fueling and maintenance area. Keep adequate quantities of absorbent spill cleanup material and spill kits in the fueling and maintenance area and on fueling trucks. Dispose of spill cleanup material and kits immediately after use. Use drip pans or absorbent pads during fueling or maintenance.

Fueling or maintenance activities must not be left unattended. Fueling nozzles must be equipped with an automatic shutoff control. Vapor recovery fueling nozzles must be used where required by the Air Quality Management District. When not in use, nozzles must be secured upright. Do not top-off fuel tanks.

Recycle or properly dispose of used batteries and tires.

The WPC Manager must inspect vehicle and equipment maintenance and fueling areas:

1. Daily when vehicle and equipment maintenance and fueling occurs daily
2. Weekly when vehicle and equipment maintenance and fueling does not occur daily

The WPC Manager must inspect vehicles and equipment at the job site for leaks and spills on a daily schedule. Operators must inspect vehicles and equipment each day of use.

If leaks cannot be repaired immediately, remove the vehicle or equipment from the job site.

Material and Equipment Used Over Water

Place drip pans and absorbent pads under vehicles or equipment used over water. Keep an adequate supply of spill cleanup material with the vehicle or equipment. If the vehicle or equipment will be idle for more than one hour, place drip pans or plastic sheeting under the vehicle or equipment on docks, barges, or other surfaces over water.

Furnish watertight curbs or toe boards on barges, platforms, docks, or other surfaces over water to contain material, debris, and tools. Secure material to prevent spills or discharge into water due to wind.

Structure Removal Over or Adjacent to Water

Do not allow demolished material to enter storm water systems or watercourses. Use approved covers and platforms to collect debris. Use attachments on equipment to catch debris on small demolition activities. Empty debris catching devices daily and handle debris under "Waste Management" of these Special Provisions.

The WPC Manager must inspect demolition sites within 50 feet of storm water systems or watercourses daily.

Paving, Sealing, Sawcutting, Grooving, and Grinding Activities

Prevent the following materials from entering storm drain systems or water courses:

1. Cementitious material
2. Asphaltic material
3. Aggregate or screenings
4. Grinding grooving, or sawcutting residue
5. Pavement chunks
6. Shoulder backing
7. Methacrylate

Cover drainage inlets and use linear sediment barriers to protect downhill watercourses until paving, sealing, sawcutting, grooving, or grinding activities are completed and excess material has been removed. Cover drainage inlets and manholes during the application of seal coat, tack coat, slurry seal, or fog seal.

If precipitation is predicted, limit paving, sawcutting, and grinding to places where runoff can be captured.

Do not start seal coat, tack coat, slurry seal, or fog seal activities if precipitation is predicted during the application or curing period. Do not excavate material from existing roadways during precipitation.

Use a vacuum to remove slurry immediately after slurry is produced. Do not allow slurry to run onto lanes open to traffic or off the pavement.

Collect residue from portland cement concrete grinding and grooving activities with a vacuum attachment on the grinding machine. Do not leave any residue on the pavement or allow the residue to flow across the pavement.

If approved, material excavated from existing roadways may be stockpiled under "Stockpile Management" of these Special Provisions.

Do not coat asphalt trucks and equipment with substances that contain soap, foaming agents, or toxic chemicals.

When paving equipment is not in use, park over drip pans or plastic sheeting with absorbent material to catch drips.

Thermoplastic Striping and Pavement Markers

Thermoplastic striping and preheating equipment shutoff valves must work properly at all times. Do not preheat, transfer, or load thermoplastic within 50 feet of drainage inlets or watercourses. Do not fill a preheating container above a level that is 6 inches below the top. Truck beds must be cleaned daily of scraps or melted thermoplastic.

Do not unload, transfer, or load bituminous material for pavement markers within 50 feet of drainage inlets or watercourses. Release all pressure from a melting tank before removing the lid to fill or service. Do not fill a melting tank above a level that is 6 inches below the top.

Collect bituminous material from the roadway after marker removal.

Pile Driving

Keep spill kits and cleanup material at pile driving locations. Pile driving equipment must be parked over drip pans, absorbent pads, or plastic sheeting with absorbent material. If precipitation is predicted, protect pile driving equipment by parking on plywood and covering with plastic.

Store pile driving equipment when not in use. Stored pile driving equipment must be:

1. Kept on level ground
2. Protected from storm water run-on
3. If within the floodplain, at least 100 feet from concentrated flows of storm water, drainage courses, watercourses, and storm drain inlets unless approved
4. If outside the floodplain, at least 50 feet from concentrated flows of storm water, drainage courses, watercourses, and storm drain inlets unless approved

If practicable, use vegetable oil instead of hydraulic fluid.

The WPC Manager must inspect the pile driving area for leaks and spills:
1. Daily when pile driving occurs daily
2. Weekly when pile driving does not occur daily

Concrete Curing
Do not overspray chemical curing compound. Minimize the drift by spraying as close to the concrete as possible. Cover drainage inlets before applying the curing compound.

Minimize the use and discharge of water by using wet blankets or similar methods to maintain moisture while curing concrete.

Concrete Finishing
Collect and dispose of water and solid waste from high-pressure water blasting. Cover drainage inlets within 50 feet before sandblasting. Minimize drift of dust and blast material by keeping the nozzle close to the surface of the concrete. The blast residue may contain hazardous material.

Inspect concrete finishing containment structures for damage before each day of use and before predicted precipitation. Remove liquid and solid waste from containment structures after each work shift.

Sweeping
Sweeping must be done using hand or mechanical methods such as vacuuming.

Monitor paved areas and roadways within the job site for sediment and debris generating activities such as:
1. Clearing and grubbing
2. Earthwork
3. Trenching
4. Roadway structural section work
5. Vehicles entering and leaving the job site
6. Soil disturbing work
7. Work that causes offsite tracking of material

If sediment or debris is observed, perform sweeping:
1. Within:
    1.1. 8 hours of predicted rain
    1.2. 24 hours unless the Engineer approves a longer period
2. On paved roads at job site entrances and exit locations
3. On paved areas within the job site that flow to storm drains or receiving waters

You may stockpile collected material at the job site. Remove collected material including sediment from paved shoulders, drain inlets, curbs and dikes, and other drainage areas. If stockpiled, dispose of collected material at least once per week.

You may dispose of sediment within the job site that you collected during sweeping activities. Protect disposal areas against erosion.

Remove and dispose of trash collected during sweeping under Section 7-1.13, "Disposal of Material Outside the Highway Right of Way" of the Standard Specifications.

Dewatering

Dewatering consists of discharging accumulated storm water, ground water, or surface water from excavations or temporary containment facilities.

If dewatering and discharging activities are specified under a work item such as "Temporary Active Treatment System" or "Dewatering and Discharge," perform dewatering work as specified in the section involved.

If dewatering and discharging activities are not specified under a work item and you will be performing dewatering activities, you must:

1. Submit a Dewatering and Discharge Plan under Section 5-1.02, "Plans and Working Drawings," of the Standard Specifications and "Water Pollution Control" of these Special Provisions at least 10 days before starting dewatering activities. The Dewatering and Discharge Plan must include:
    - 1.1. Title sheet and table of contents
    - 1.2. Description of dewatering and discharge activities detailing locations, quantity of water, equipment, and discharge points
    - 1.3. Estimated schedule for dewatering and discharge (start and end dates, intermittent or continuous)
    - 1.4. Discharge alternatives such as dust control or percolation
    - 1.5. Visual monitoring procedures with inspection log
2. Conduct dewatering activities under the Department's "Field Guide for Construction Dewatering."
3. Ensure that any dewatering discharge does not cause erosion, scour, or sedimentary deposits that could impact natural bedding materials.
4. Discharge the water within the project limits. Dispose of the water in the same way as specified for material in Section 7-1.13, "Disposal of Material Outside the Highway Right of Way," of the Standard Specification if it cannot be discharged within project limits due to site constraints.
5. Do not discharge storm water or non-stormwater that has an odor, discoloration other than sediment, an oily sheen, or foam on the surface. Notify the Engineer immediately upon discovering any such condition.

The WPC manager must inspect dewatering activities:

1. Daily when dewatering work occurs daily
2. Weekly when dewatering work does not occur daily

10-1.04F Payment: Full compensation for construction site management, including furnishing all labor, materials, tools, equipment, and incidentals and for fully complying with the provisions in this section and for doing all the work involved in spill prevention and

control, material management, waste management, non-storm water management, and dewatering and identifying, sampling, testing, handling, and disposing of hazardous waste resulting from contractor activities, as specified in the Standard Specifications and these Special Provisions, and as directed by the Engineer, shall be considered as included in the contract price paid for the various items of work involved and no separate payment will be made therefor.

10-1.05 Preservation of Property: Attention is directed to Sections 7-1.11 "Preservation of Property," 7-1.12 "Responsibility for Damage," and Section 8-1.10 "Utility and Non-Highway Facilities" of the Standard Specifications. Existing highway and adjacent property, utility and non-highway facilities, trees, plants, and irrigation facilities that are not designated to be removed, shall be fully protected from damage at the Contractor's expense.

Full compensation for preservation of property, responsibility for damage, utility and non-highway facilities, provisions of public convenience, and public safety, and for conforming to the provisions of the Standard Specifications, the project Plans and these Special Provisions, and the requirements of the Engineer shall be considered as included in the prices paid for the various items of work involved and no additional compensation will be allowed therefor.

10-1.06 Obstructions: Attention is directed to Sections 8-1.10, "Utility and Non-Highway Facilities," and 15, "Existing Highway Facilities," of the Standard Specifications and these Special Provisions.

It shall be the responsibility of the Contractor to work with the local utility companies to locate all underground utility facilities within the construction area prior to any excavation work. This requires that the Contractor notify by telephone "Underground Service Alert" at least two business days, put not more than 14 days, prior to commencing any excavation (including erecting stationary mounted construction area signs). Notification Center: Underground Service Alert – USA North Telephone Number: 1-800-227-2600.

The Contractor shall obtain and provide the "Inquire Identification Number" to the Engineer before excavation commences.

It shall be the responsibility of the Contractor to coordinate operations at locations that may require rearrangement of existing utility facilities by others, whether such facilities are rearranged before, during, or after construction is completed.

The following utility companies are known to have existing facilities and/or services within the Project limits:

Company Name	Contact	Phone Number
AT&T/SBC/PacBell	Ralph Soares	546-7315
Southern California Gas Co.	Claudia Turner	681-8024
PG&E	Bob Burke	546-5236

Charter Communications	Fenton Moody	431-3047
Verizon	Bryan Davis	928-7642
Chevron	Kyle Rutherford	546-6920
AT&T legacy	Joseph Forket	(714) 963-7964
Los Osos CSD	Margaret Falkner	528-9438

10-1.07 Measurement and Payment: In addition to the provisions of Section 9-1.01 of the Standard Specifications, the following requirement will apply:

The 13th paragraph of Section 9-1.01, "Measurement of Quantities," of the Standard Specifications shall be amended to read as follows:

Whenever pay quantities of material are determined by weighing, the scales shall be operated by a weighmaster licensed in accordance with the provisions of the California Business and Professions Code, Division 5, Chapter 7. The Contractor shall furnish a Public Weighmaster's certificate, or a Private Weighmaster's certificate (load slip) with each load and a Daily Record of Platform Scale Weights. The Weighmaster's certificates shall be numbered consecutively to correspond with the Daily Record of Platform Scale Weights. The Daily Record of Platform Scale Weights shall be prepared using a form supplied by the County and shall be delivered to the Engineer at the end of each day. A representative of the County may be present to witness the weighing and to check the Daily Record of Platform Scale Weights.

10-1.08 Material Deposited at Job Site: The Contractor shall provide load slips to the Engineer at the point of delivery for all materials deposited at the job site for payment purposes.

10-1.09 Maintaining Traffic

10-1.09A General: Attention is directed to the provisions of Section 7-1.08, "Public Convenience," Section 7-1.09, "Public Safety," and Section 12, "Construction Area Traffic Control Devices," of the Standard Specifications and these Special Provisions. Nothing in these Special Provisions shall be construed as relieving the Contractor from the responsibilities specified in these sections.

During the times when men or equipment are actually working, a minimum of one 12-foot wide lane with flagging shall be provided for public traffic. At all other times, a minimum of two 10-foot wide lanes which are reasonably smooth and satisfactory for public two-way traffic shall be provided and maintained by the Contractor irrespective of the state of construction. Adequate sight distance for vehicles exiting driveways shall be maintained.

All flaggers shall hold current certifications in accordance with Cal OSHA Construction Safety Order Section 1599. All workers in the roadway shall wear Type 2 Cal OSHA high-visibility vests.

The Contractor shall conduct operations in such a manner that access of abutting residences and businesses along the road is not obstructed. Care shall be taken by the Contractor so that materials or equipment placed or parked within the County road right of way will not block driveways or other access means used by the adjacent property owners.

The full width of the traveled way shall be open for use by public traffic on Saturdays, Sundays, designated legal holidays, and when construction operations are not actively in progress on working days.

When the Contractor's operations result in a drop off at the edge of pavement of 0.15' or more, the Contractor shall place and maintain portable delineators, W8-9 (LOW SHOULDER) signs, and R4-1 (DO NOT PASS) signs prior to opening the lane to uncontrolled traffic. Portable delineators shall be placed at maximum intervals of 100 feet on tangents and 50 feet on curves. Warning signs shall be mounted on Type II barricades off of and adjacent to the traveled way at maximum intervals of 2000 feet.

Where shoulder backing or striping is performed by others, Contractor shall maintain portable delineators and signs for a period of 14 calendar days from the date paving operations were completed by the Contractor.

When the Contractor's operations result in a transverse drop off in the traveled way, the Contractor shall construct a temporary asphalt concrete taper on a slope of 50:1 or flatter at the drop off, and place and maintain a W37-1 (BUMP) sign mounted on a Type II barricade off of and adjacent to the traveled way in advance of the drop off prior to opening the lane to uncontrolled traffic. The Contractor shall maintain warning signs and barricades until paving resumes at these work areas.

Longitudinal vertical drop offs are not allowed in the traveled way open to traffic, regardless of thickness. When the Contractor's operations result in a longitudinal drop off in the traveled way, the Contractor shall construct a temporary asphalt concrete taper on a slope of 10:1 or flatter at the drop off, prior to opening the lane to uncontrolled traffic.

The Contractor shall maintain temporary asphalt concrete tapers to the satisfaction of the Engineer. The temporary asphalt concrete taper shall remain in place until being replaced with permanent road surfacing.

When the Contractor's operations result in the removal and replacement of guard railing, the Contractor shall place and maintain temporary delineators off of and adjacent to the traveled way at maximum intervals of 20 feet. Guard rail shall be replaced in accordance with the Plans within 48 hours unless otherwise authorized by the Engineer.

The Contractor will not be permitted to work on two sides of any road at a time. All work on one side of the road shall be completed as required prior to the beginning of construction operations on the other side of the road.

The Contractor, pursuant to Section 22651-M of the California Vehicle Code, shall be responsible for notifying and making arrangements with owners of vehicles required to be removed from the work area.

Streets and roads shall be posted by the Contractor with temporary “NO PARKING” signs on Type II Barricades. Temporary “NO PARKING” signs shall be 12” x 18”, and shall display the message “TEMPORARY NO PARKING TOW AWAY” in 2” red letters. Signs shall be posted with the appropriate dates listed, a minimum of 48 hours in advance of doing the work. In the event that a change in sign posting is required due to a change in the Contractor’s work schedule, the Contractor shall repost the locations affected at the Contractor’s own expense.

Portable delineators, traffic cones, barricades, telescoping flag tree with flags, signs, and all traffic control devices specified in these Special Provisions shall conform to the requirements of Section 12, “Construction Area Traffic Control Devices,” of the Standard Specifications.

The Contractor’s jobsite vehicles and equipment shall be equipped with amber, flashing lights, visible to jobsite labor public traffic, and pedestrians.

The provisions in this section may be modified if, in the opinion of the Engineer, public traffic will be better served and work expedited. Any proposed modifications shall be approved in writing by the Engineer.

Full compensation for conforming to the requirements of this section shall be considered as included in the prices paid for the various items of work involved and no additional compensation will be allowed therefore.

Full compensation for furnishing, placing, maintaining, removing and disposing of the temporary tapers shall be considered as included in the prices paid for the various items of work involved and no additional compensation will be allowed therefor.

10-1.09B <u>Traffic Control System for Lane Closures</u>: A traffic control system shall consist of closing traffic lanes in conformance with the details shown on the Plans, the provisions of Section 12, "Construction Area Traffic Control Devices," of the Standard Specifications, the provisions of "Maintaining Traffic" and "Construction Area Signs" of these Special Provisions, and these Special Provisions.

The provisions in this section will not relieve the Contractor from the responsibility to provide additional devices or take measures as may be necessary to comply with the provisions in Section 7-1.09, "Public Safety," of the Standard Specifications.

If components in the traffic control system are damaged, displaced, or cease to operate or function as specified, from any cause, during the progress of the work, the Contractor shall immediately repair the components to the original condition or replace the components and shall restore the components to the original location.

When lane closures are made for work periods only, at the end of each work period, components of the traffic control system, except portable delineators placed along open trenches or excavation adjacent to the traveled way shall be removed from the traveled way and shoulder. If the Contractor so elects, the components may be stored at selected central locations designated by the Engineer within the limits of the highway right of way.

One-way traffic shall be controlled through the project in conformance with the plan entitled "Traffic Control System for Lane Closure on Two Lane Conventional Highways", “Traffic Control System For Ramp Closure”, and these Special Provisions. Ramp closures shall conform to the plan entitled “Traffic Control System for Ramp Closures,” and these Special Provisions.

Utilizing a pilot car will be at the option of the Contractor. If the Contractor elects to use a pilot car, the cones shown along the centerline of the plan need not be placed. The pilot car shall have radio contact with personnel in the work area and the maximum speed of the pilot car through the traffic control zone shall be 25 miles-per-hour

Flagging costs will be paid for as provided in Section 12-2.02, "Flagging Costs," of the Standard Specifications.

The contract lump sum price paid for “TRAFFIC CONTROL SYSTEM” shall include full compensation for furnishing all labor (except for County’s portion of flagging costs), materials including signs, tools, equipment, and incidentals, and for doing all the work involved in placing, removing, storing, maintaining, moving to new locations, replacing, and disposing of the components of the traffic control system and for furnishing and operating the pilot car (including driver, radios, other equipment, and labor required), as shown on the Plans, as specified in the Standard Specifications and these Special Provisions, and as directed by the Engineer, and no additional compensation will be allowed therefor.

Costs for flagging in accordance with Section 7-1.09, “Public Safety,” and supplemental traffic control ordered by the Engineer in accordance with Section 7-1.08, “Public Convenience,” of the Standard Specifications will be paid for under “ALLOWANCE FOR SUPPLEMENTAL FLAGGING AND TRAFFIC CONTROL”.

The adjustment provisions in Section 4-1.03, "Changes," of the Standard Specifications shall not apply to the item of traffic control system, or the supplemental work item for flagging and supplemental traffic control. Adjustments in compensation for traffic control system will be made only for increased or decreased traffic control system required by changes ordered by the Engineer and will be made on the basis of the cost of the increased or decreased traffic control necessary. The adjustment will be made on a force account basis as provided in Section 9-1.03, "Force Account Payment," of the Standard Specifications for increased work and estimated on the same basis in the case of decreased work.

Traffic control system required by work which is classed as extra work, as provided in Section 4-1.03D of the Standard Specifications, will be paid for as a part of the supplemental work item for flagging and supplemental traffic control.

10-1.09C Temporary Pavement Delineation: Temporary pavement delineation shall be furnished, placed, maintained, and removed in conformance with the provisions in Section 12-3.01, "General," of the Standard Specifications and these Special Provisions. Nothing in these Special Provisions shall be construed as reducing the minimum standards specified in the California MUTCD or as relieving the Contractor from the responsibilities specified in Section 7-1.09, "Public Safety," of the Standard Specifications.

When the work causes obliteration of pavement delineation, temporary or permanent pavement delineation shall be in place before opening the traveled way to public traffic. Laneline or centerline pavement delineation shall be provided for traveled ways open to public traffic.

Work necessary, including required lines or markers, to establish the alignment of temporary pavement delineation shall be performed by the Contractor. Surfaces to receive application of paint or removable traffic tape temporary pavement delineation shall be dry and free of dirt and loose material. Temporary pavement delineation shall not be applied over existing pavement delineation or other temporary pavement delineation. Temporary pavement delineation shall be maintained until superseded or replaced with a new pattern of temporary pavement delineation or permanent pavement delineation, or as determined by the Engineer.

Temporary pavement markers and removable traffic tape that conflicts with a new traffic pattern or that is applied to the final layer of surfacing or existing pavement to remain in place shall be removed when no longer required for the direction of public traffic, as determined by the Engineer.

Temporary pavement delineation shall be used on or adjacent to lanes open to public traffic for a maximum of 14 days. Before the end of the 14 days, the permanent pavement delineation will be placed by County forces. If the permanent pavement delineation is not placed within the 14 days, the Contractor shall maintain the temporary pavement delineation until permanent pavement delineation is completed. The Contractor will be compensated for such additional pavement delineation in accordance with the provisions of Section 4-1.03D, “Extra Work,” of the Standard Specifications.

Painted traffic stripe used for temporary delineation shall conform to Section 84-3, "Painted Traffic Stripes and Pavement Markings," of the Standard Specifications, except for payment.

Temporary Laneline and Centerline Delineation: When lanelines or centerlines are obliterated, the minimum laneline and centerline delineation to be provided shall be temporary pavement markers placed at longitudinal intervals of not more than 24 feet. The temporary pavement markers shall be the same color as the laneline or centerline the markers replace. Temporary pavement markers shall be, at the option of the Contractor,

one of the temporary pavement markers listed for short term day/night use (14 days or less) or long term day/night use (6 months or less) in "Prequalified and Tested Signing and Delineation Materials" of these Special Provisions. Temporary pavement markers shall be placed in conformance with the manufacturer's instructions and shall be cemented to the surfacing with the adhesive recommended by the manufacturer, except epoxy adhesive shall not be used to place pavement markers in areas where removal of the markers will be required.

Where laneline and centerline delineation is obliterated by cold plane grinding operations, temporary painted delineation shall be used. Temporary pavement markers, or “Floppies”, shall not be placed on cold plane surfaces.

Where "no passing" centerline pavement delineation is obliterated, or where the Contractor’s operations result in a drop off at the edge of pavement of 0.15’ or more, the following "no passing" zone signing shall be installed before opening the lanes to public traffic. W20-1 (ROAD WORK AHEAD) signs shall be installed from 1,000 feet to 2,000 feet in advance of "no passing" zones. R4-1 (DO NOT PASS) signs shall be installed at the beginning and at every 2,000-foot interval within "no passing" zones. For continuous zones longer than 2 miles, W7-3a or W71 (CA) (NEXT _____ MILES) signs shall be installed beneath the W20-1 signs installed in advance of "no passing" zones. R4-2 (PASS WITH CARE) signs shall be installed at the end of "no passing" zones. The exact location of "no passing" zone signing will be as determined by the Engineer and shall be maintained in place until permanent "no passing" centerline pavement delineation has been applied. Signs for "no passing" zones shall be removed when no longer required for the direction of public traffic. Signs for "no passing" zones shall be mounted on Type II barricades and shall conform to the provisions in "Construction Area Signs" of these Special Provisions, except for payment.

Full compensation for furnishing, placing, maintaining, and removing temporary pavement markers used for temporary laneline and centerline delineation and for providing equivalent patterns of permanent traffic lines for these areas when required shall be considered as included in the contract prices paid for the items of work that obliterated the laneline and centerline pavement delineation and no separate payment will be made therefor.

Full compensation for furnishing, placing, and maintaining temporary painted laneline and centerline pavement delineation shall be considered as included in the contract prices paid for the items of work that obliterated the laneline and centerline pavement delineation and no separate payment will be made therefor.

Full compensation for furnishing, placing, maintaining, and removing signing specified for "no passing" zones shall be considered as included in the contract prices paid for the items of work that obliterated the laneline and centerline pavement delineation and no separate payment will be made therefor.

Temporary Edgeline Delineation: When edgelines are obliterated , the edgeline delineation to be provided for that area adjacent to lanes open to public traffic shall consist of portable delineators placed at longitudinal intervals not to exceed 100' feet.

The lateral offset for portable delineators used for temporary edgeline delineation shall be determined by the Engineer. The Contractor shall provide personnel to maintain the delineators during the time that the cones or delineators are in use. In areas subject to heavy traffic, the Engineer may require delineator bases to be doubled at the Contractor's expense.

Temporary edgeline delineation shall be removed when no longer required for the direction of public traffic, as determined by the Engineer.

Full compensation for furnishing, placing, maintaining, and removing temporary edgeline delineation shall be considered as included in the contract prices paid for the items of work that obliterated the edgeline pavement delineation and no separate payment will be made therefor.

Other Pavement Markings: Where stop bars or crosswalks are obliterated, pavement marking tape shall be placed. The width and color of the existing markings shall be replaced in-kind. Temporary pavement marking tape shall be as listed in "Prequalified Testing and Delineation Materials" of these Special Provisions, and shall be applied in conformance with the manufacturer's recommendations.

10-1.09D Construction Area Signs: Construction area signs for temporary traffic control shall be furnished, installed, maintained, and removed when no longer required in conformance with the provisions in Section 12, "Construction Area Traffic Control Devices," of the Standard Specifications and these Special Provisions.

Standard W20-1 (ROAD CONSTRUCTION AHEAD) and G20-2 (END CONSTRUCTION) signs shall be placed in advance of the work at each site and left onsite during non-working hours until the work at each site is complete. The W20-1 and G20-2 signs shall be stationary mounted sign supports as specified in Section 12, "Construction Area Traffic Control Devices" of the Standard Specifications.

Encroachment permits for placement of construction area signs placed within the jurisdiction of adjacent agencies are the responsibility of the Contractor.

Attention is directed to the provisions in Section 8-1.01, "Prequalified and Tested Signing and Delineation Materials," of these Special Provisions. Type II retroreflective sheeting shall not be used on construction area sign panels. Type III, IV, VII, VIII, or IX retroreflective sheeting shall be used for stationary mounted construction area sign panels.

Unless otherwise shown on the Plans or specified in these Special Provisions, the color of construction area warning and guide signs shall have black legend and border on orange background.

The base material of construction area signs shall not be plywood. Used sign panels, in good repair as determined by the Engineer, may be furnished. If determined by the Engineer, signs damaged by any cause shall be replaced by the Contractor at the Contractor's own expense. Repair to construction area sign panels will not be allowed, except when approved by the Engineer. At nighttime under vehicular headlight illumination, sign panels that exhibit irregular luminance, shadowing, or dark blotches shall be immediately replaced at the Contractor's expense.

The Contractor shall notify the appropriate regional notification center (USA North, 1-800-227-2600) for operators of subsurface installations at least 2 business days, but not more than 14 days, prior to commencing excavation for construction area sign posts.

Excavations required to install construction area signs shall be performed by hand methods without the use of power equipment, except that power equipment may be used if it is determined there are no utility facilities in the area of the proposed post holes. The post hole diameter, if backfilled with portland cement concrete, shall be at least 4 inches greater than the longer dimension of the post cross section.

The Contractor shall maintain accurate information on construction area signs. Signs that are no longer required shall be immediately covered or removed. Signs that convey inaccurate information shall be immediately replaced or the information shall be corrected. Covers shall be replaced when they no longer cover the signs properly. The Contractor shall immediately restore to the original position and location any sign that is displaced or overturned, from any cause, during the progress of work.

Signs damaged by any cause shall be repaired, or, if determined by the Engineer to be irreparable, replaced by the Contractor at the Contractor's expense.

"CONSTRUCTION AREA SIGNS" will be paid for on a lump sum basis in the manner specified in Section 12-4.01 of the Standard Specifications.

10-1.09E <u>Portable Changeable Message Sign:</u> Portable changeable message signs shall be furnished, placed, operated, and maintained at those locations where designated by the Engineer in conformance with the provisions in Section 12, "Construction Area Traffic Control Devices," of the Standard Specifications and these Special Provisions.

The PCMSs shall be programmed as directed by the Engineer with messages for advance warning prior to construction operations, advisory warning during construction operations, and with other information as directed.

The PCMSs shall be placed and activated for advance warning to motorists in accordance with the requirements of Section 10-1.01, "Order of Work," of these Special Provisions.

"PORTABLE CHANGEABLE MESSAGE SIGN" will be measured and paid for by the unit in the manner specified in Section 12, "Construction Area Traffic control Devices," of the Standard Specifications.

10-1.10 Existing Highway Facilities: The work performed in connection with various existing highway facilities shall conform to the provisions in Section 15, "Existing Highway Facilities," of the Standard Specifications and these Special Provisions.

10-1.10A Remove Asphalt Concrete: Asphalt concrete, where shown on the plans to be removed, shall be removed and disposed of.

Attention is directed to Section 16, "Clearing and Grubbing," and Section 19-1.04, "Removal and Disposal of Buried Man-Made Objects," of the Standard Specifications and these special provisions.

Removed asphalt concrete shall be disposed of outside the highway right of way in conformance with the provisions in Section 7-1.13, "Disposal of Material Outside the Highway Right of Way," of the Standard Specifications.

Full compensation for removing and disposing of asphalt concrete, shall be considered included in the contract price paid for "MINOR CONCRETE (CURB RAMP), "and no separate payment will be made therefor.

10-1.10B Remove Asphalt Concrete Dike: Existing asphalt concrete dike shall be removed at the locations shown on the Plans, as specified in these Special Provisions, and as directed by the Engineer.

The material removed, including material deposited in existing gutters or on the adjacent traveled way, shall be immediately removed from the site of the work and disposed of as provided in Section 7-1.13, "Disposal of Material outside the Highway Right-of-Way," of the Standard Specifications, or as specified herein.

Full compensation for removing and disposing of asphalt concrete dike, shall be considered included in the contract price paid for "MINOR CONCRETE (CURB AND GUTTER), and no separate payment will be made therefor.

10-1.10C Replace Monument Well: The adjustment of survey monument wells shall consist of removing and replacing existing survey monument wells (including frame and cover) to grade, and shall be in accordance with Section 15-2.05, "Reconstruction," of the Standard Specifications and these Special Provisions.

The provisions in this section will not relieve the Contractor from the responsibility to provide such additional devices or take such measures as may be necessary to comply with the provisions of Section 7-1.09, "Public Safety," of the Standard Specifications.

The adjustment of survey monument wells shall be performed after the completion of the asphalt overlay operation. The Contractor shall provide reference stakes or marks prior to

paving so that the existing facilities can be located after the asphalt overlay has been completed.

Material and debris generated from the removal of asphalt, concrete, excavated material, and the final adjustment of the monument wells, frames and covers shall become the property of the Contractor and disposed of as provided in Section 7-1.13, "Disposal of Material Outside the Highway Right of Way," of the Standard Specifications and immediately after each work day.

The new survey monument wells shall be adjusted to the level of new roadway surface.

New monument wells shall be per County Standard Drawing M-1 "Standard Street Monument for Paved Roads". Monument wells shall be centered over the survey monument, and a new 7-inch wide by a minimum 6-inch thick concrete collar placed around the monument will without disturbing the monument. A new 10-inch wide by a minimum 12-inch thick concrete collar shall be placed around the manhole frame and cover. Concrete shall be "Minor Concrete" in accordance with Section 90, "Portland Cement Concrete," of the Standard Specifications. The resetting of the monument wells may require furnishing placing, and compacting granular material as approved by the Engineer.

The Contractor shall furnish, place, and maintain a portable delineator at each adjusted monument well. The Contractor shall remove the delineator when the Engineer has determined that the delineator is no longer needed.

The contract unit price paid for "ADJUST MONUMENT WELL" shall include full compensation for removing and disposing of asphalt, concrete, and debris, providing and installing new monument well assembly, placing concrete collar, complete in place, in accordance with the Plans, Special Provisions and Standard Specifications, and as directed by the Engineer.

10-1.10D <u>Cold Plane Asphalt Concrete Pavement</u>: General: This work includes cold planing existing asphalt concrete pavement as shown on the Plans and as directed by the Engineer.

Schedule cold planning activities so that not more than 48 hours elapses between the time the pavement is cold planed and the HMA is placed and so that no cold planed areas are exposed during weekends or designated holidays.
If you cannot place HMA over the entire cold planed area before opening it to traffic:

1. Construct a temporary HMA taper to the level of the existing pavement.

Construction: Perform planing of asphalt concrete pavement without the use of a heating device to soften the pavement.

Cold planing machine must be:

1. Equipped with a cutter head width that matches the planing width. If the only available cutter head width is wider than the cold plane area shown,

submit to the Engineer a request for using a wider cutter head. Do not cold plane until the Engineer approves your request.

2. Equipped with automatic controls to control the longitudinal grade and transverse slope of the cutter head and:
   - 2.1. If a ski device is used, it must be at least 30 feet long, rigid, and 1 piece unit. The entire length must be used in activating the sensor.
   - 2.2. If referencing from existing pavement, the cold planing machine must be controlled by a self-contained grade reference system. The system must be used at or near the centerline of the roadway. On the adjacent pass with the cold planing machine, a joint matching shoe may be used.
3. Equipped to effectively control dust generated by the planing operation.
4. Operated so that no fumes or smoke is produced.

Replace broken, missing, or worn machine teeth.

Furnish, install, and maintain grade and transverse slope references.

The depth, length, width, and shape of the cut must be as shown or as ordered. The final cut must result in a neat and uniform surface. Do not damage remaining surface.

The completed surface of the planed asphalt concrete pavement must not vary more than 0.02 foot when measured with a 12-foot straightedge parallel with the centerline. The transverse slope of the planed surface must not vary more than 0.03 foot from the straightedge when placed at right angles to the centerline.

If a drop-off between the existing pavement and the planed area cannot be avoided before opening to traffic, construct a temporary HMA taper from the level of the existing pavement to the level of the planed area. HMA for temporary taper must be:

1. Tapered on a slope of 50:1 (Horizontal: Vertical) or flatter for transverse joints, or 10:1 for longitudinal joints
2. Compacted by any method that will produce a smooth riding surface
3. Completely removed before placing the permanent surfacing. The removed material must be disposed of outside the highway right of way in conformance with the provisions in Section 7-1.13, "Disposal of Material Outside the Highway Right of Way," of the Standard Specifications.

Remove cold planed material concurrent with planing activities, within 50 feet of the planer or as ordered.

Dispose of planed material under Section 7-1.13, "Disposal of Material Outside the Highway Right of Way," of the Standard Specifications.

Measurement and Payment: Cold plane asphalt concrete pavement is measured by the square yard.

The contract price paid per square yard for "COLD PLANE ASPHALT CONCRETE (0.17' MAX.), includes full compensation for furnishing all labor, materials, tools, equipment, and incidentals, and for doing all the work involved in cold planing asphalt concrete surfacing and disposing of planed material, including constructing, maintaining, removing temporary HMA tapers if applicable, as specified in the Standard Specifications and these Special Provisions and as directed by the Engineer.

The contract price paid per square yard for "COLD PLANE ASPHALT CONCRETE DIGOUTS (0.33' MAX.), includes full compensation for furnishing all labor, materials, tools, equipment, and incidentals, and for doing all the work involved in cold planing asphalt concrete surfacing and disposing of planed material, including constructing, maintaining, removing temporary HMA tapers if applicable, as specified in the Standard Specifications and these Special Provisions and as directed by the Engineer.

10-1.10E Clearing and Grubbing: Clearing and grubbing shall conform to the provisions of Section 16, "Clearing and Grubbing," of the Standard Specification and these Special Provisions.

All existing vegetation, outside the areas to be cleared and grubbed, shall be protected from injury or damage resulting from the Contractor's activities.

Clearing and Grubing shall include (but not be limited to) removing downed tree branches, leaves, debris, sand, and vegetation within the roadway surface and at the edge of pavement.

Full compensation for clearing and grubbing shall be considered as included in the prices paid for the various items of work and no additional compensation will be allowed therefor.

10-1.11 Asphaltic Emulsion (Rejuvenating Seal Coat): Asphalt rejuvenating agent shall conform to the provisions for seal coats in Section 37-1, "Seal Coats," of the Standard Specifications and these special provisions.

Asphalt rejuvenating agent shall conform to the provisions for fog seal coat. The emulsion for asphalt rejuvenating agent shall conform to the provisions for asphaltic emulsion in Section 94, "Asphaltic Emulsions," of the Standard Specifications and shall be a petroleum resin base uniformly emulsified with water conforming to the following:

Asphalt Rejuvenating Agent			
Test	Test Method	Requirements	
		Minimum	Maximum
Viscosity, 25°C, SFS,	AASHTO T 59	15	40
Miscibility Test	AASHTO T 59		No coagulation
Sieve, w%	AASHTO T 59		0.10
Residue, w%	ASTM D-244	60	65
Viscosity, 60°C, cSt	ASTM D-244	100	200
Component Analysis, w%	ASTM D 2006-70		

Asphaltenes, w%	ASTM D 2006-70		0.75
Saturates, w%	ASTM D 2006-70	21	28
Maltenes Distribution Ratio			
(PCA+A1)/(S+A2)		0.30	0.60
PC/S Ratio		0.50	
Particle Charge Test	AASHTO T 59		Positive
PH of Emulsion	AASHTO T 59		
Dilution Stability	AASHTO T 59		5.0
% Light Transmittance			30
Cement Mixing, w%	ASTM D-244		2.0

a Procedure modified by using 0.02-normal calcium chloride solution in place of distilled water.

b Procedure modified by using distilled water in place of 2-percent sodium oleate solution.

c Available on request

If asphalt rejuvenating agent is used prior to sampling and testing, as provided in Section 6-1.07, "Certificates of Compliance," of the Standard Specifications, a Certificate of Compliance shall accompany each copy of the test report for each shipment to each job. In addition to the required signature of the vendor or the vendor's representative certifying compliance with job requirements, the certificate shall show the shipment number, type of material, refinery, consignee, destination, quantity, contract number or purchase order number, and date of shipment.

Asphalt rejuvenating agent furnished without a Certificate of Compliance shall not be used in the work until the Engineer has approved the asphalt rejuvenating agent for use. The Engineer shall have 10 days to approve the asphalt rejuvenating agent for use. If, in the opinion of the Engineer, the Contractor's controlling operation is delayed or interfered with by reason of the Engineer not completing the evaluation of the asphalt rejuvenating agent within the time specified, the delay will be considered a right of way delay in conformance with the provisions in Section 8-1.09, "Right of Way Delays," of the Standard Specifications.

The Contractor shall submit a contingency plan to the Engineer at least 10 days prior to applying asphalt rejuvenating agent. The contingency plan shall describe in detail the corrective actions the Contractor will use if the coefficient of friction is less than 0.30 or if the asphalt rejuvenating agent does not break within the times specified for lane closures. The plan shall include any additional traffic handling, additional materials on hand, or additional equipment kept available for contingency situations. The Engineer must approve the use of a corrective action before it is implemented.

Asphalt rejuvenating agent (emulsion and 50% added water or a 1:1 ratio) shall be spread at a rate of 0.15 to 1.0 L/m^2. The exact rate of application will be determined by the Contractor. The application shall be free of streaks and voids, and shall provide

uniform coverage.

"ASPHALTIC EMULSION (REJUVENATING SEAL COAT)", will be measured and paid for by the ton in the manner specified in Section 37-1 of the Standard Specifications.

10-1.12 Hot Mix Asphalt Paving:

10-1.12A General: Hot mix asphalt (HMA) paving shall conform to the provisions in Section 39, "Hot Mix Asphalt," of the Standard Specifications and these Special Provisions.

All Job Mix Formulas in accordance with Section 39-1.03, "Hot Mix Asphalt Mix Design Requirements," of the Standard Specifications shall be submitted within 10 calendar days, not including Saturdays, Sundays, and legal holidays, of the Contractor's receipt of the fully executed contract, in accordance with Section 4-1.03, "Submittals," of these Special Provisions.

The first paragraph of Section 39-1.07, "Production Start-up Evaluation," of the Standard Specifications is modified to read: "The Engineer evaluates HMA production and placement at start-up or at any location agreed upon at least 3 business days in advance.

In addition to the requirements of Section 39-2.02B, "Quality Control Testing," of the Standard Specifications the Contractor shall submit QC test reports to the Engineer on Caltrans Form CEM 3501 within 2 days of production. If QC tests are not provided as required, the Contractor waives the right to referee testing by an Independent Third Party as specified in Section 39-1.06, "Dispute Resolution," of the Standard Specifications.

In addition to the requirements of Section 6-1.04, "Defective Materials," 39-2.03A, and 39-3.02A, "Testing," of the Standard Specifications, a credit to the County of $5 per ton, at the discretion of the Engineer, will be taken for each ton of HMA represented by acceptance tests that do not comply with these provisions.

Item 1 of the third paragraph of Sections 39-2.03A and 39-3.02A, "Testing," of the Standard Specifications is hereby modified to read: "Stop production if directed by the Engineer."

Construction:

Vertical Joints: Before opening the lane to public traffic, pave shoulders and median borders adjacent to a lane being paved.

Longitudinal vertical joints are not allowed on the traveled way open to traffic, regardless of thickness. Place HMA on adjacent traveled way lanes so that at the end of each work shift, the distance between the ends of HMA layers on adjacent lanes is between 5 feet and 10 feet. Place additional HMA along the transverse edge at each lane's end and along the exposed longitudinal edges between adjacent lanes. Hand rake and compact the additional HMA to form temporary conforms. Kraft paper or another

approved bond breaker may be placed under the conform tapers to facilitate the taper removal when paving operations resume.

Place shoulder conform tapers concurrently with adjacent lane's paving.

At the end of each work shift a vertical joint between driveways and adjacent lanes shall not be more than 0.15 foot.

After paving, all conform joints shall be tacked with SS-1h at a uniform width and spread rate as directed by the Engineer.

Smoothness: The first paragraph 39-1.12A, "General," of the Standard Specifications is hereby modified to read: "Determine HMA smoothness with a straightedge."

Section 30-1.12C, "Profilograph," of the Standard Specifications shall not apply.

The fourth paragraph of Section 39-1.12D, "Smoothness Correction," is hereby modified to read: "After grinding, measure the ground HMA pavement surface with a 12-foot straightedge until the pavement is within specified tolerances. If straightedged pavement cannot be ground to within specified tolerances, remove and replace the pavement.

10-1.12B HMA Overlay (Type A): HMA overlay shall be Type A as designated on the Plans, using the Standard Process, and shall conform to the provisions in Section 39, "Hot Mix Asphalt," of the Standard Specifications and these Special Provisions.

Asphalt binder mixed with aggregate for HMA Type A shall be PG 64-10, and shall conform to the provisions in Section 92, "Asphalts," of the Standard Specifications.

The aggregate for HMA (Type A) overlay shall be ½ inch.

Place Hot Mix Asphalt Dike: HMA used for dikes and dike overlays shall be Type A and shall conform to the provisions in Section 39, "Hot Mix Asphalt," of the Standard Specifications and these Special Provisions.

The grade of asphalt binder to be mixed with aggregate for HMA Type A shall be Performance Grade PG 70-10 for dikes and dike overlays.

The aggregate for HMA Type A shall be 3/8-inch grading for dikes and dike overlays.

Measurement and Payment:

"HOT MIX ASPHALT (TYPE A) OVERLAY", will be measured and paid for by the ton in the same manner specified in Section 39, "Hot Mix Asphalt", of the Standard Specifications.

"HOT MIX ASPHALT (TYPE A) DIGOUTS", will be measured and paid for by the ton in the same manner specified in Section 39, "Hot Mix Asphalt", of the Standard Specifications.

Full compensation for hot mix asphalt dike shall be considered as included in the contract price paid per linear foot for "MINOR CONCRETE (CURB AND GUTTER)", in addition to the price paid for material involved under the contract price per ton for "HOT MIX ASPHALT (TYPE A) OVERLAY ", and no additional compensation will be allowed therefor.

Full compensation for tack coat shall be considered as included in the contract price paid per ton for "HOT MIX ASPHALT (TYPE A) OVERLAY ", and no additional compensation will be allowed therefor.

10-1.12C Payment Adjustments For Price Index Fluctuations: The provisions of this section shall apply only to the following contract items:

ITEM.CODE	ITEM
390132	HOT MIX ASPHALT (TYPE A) OVERLAY
390132	HOT MIX ASPHALT (TYPE A) DIGOUTS

The compensation payable for hot mix asphalt and asphalt treated permeable base will be increased or decreased in conformance with the provisions of this section for paving asphalt price fluctuations exceeding 5 percent (Iu/Ib is greater than 1.05 or less than 0.95) which occur during performance of the work.

The adjustment in compensation will be determined in conformance with the following formulae when the item of Hot Mix Asphalt or asphalt treated permeable base is included in a monthly estimate:

A. Total monthly adjustment = AQ

B. For an increase in paving asphalt price index exceeding 5 percent:

A = 0.90 (Iu/Ib - 1.05) Ib

C. For a decrease in paving asphalt price index exceeding 5 percent:

A = 0.90 (Iu/Ib - 0.95) Ib

D. Where:

A = Adjustment in dollars per ton of paving asphalt used to produce Hot Mix Asphalt and asphalt treated permeable base rounded to the nearest $0.01.

Iu = The California Statewide Paving Asphalt Price Index which is in effect on the first business day of the month within the pay period in which the quantity subject to adjustment was included in the estimate.

Ib = The California Statewide Paving Asphalt Price Index for the month in which the bid opening for the project occurred.

Q = Quantity in tons of paving asphalt that was used in producing the quantity of hot mix asphalt shown under "This Estimate" on the monthly estimate using the amount of asphalt determined by the Engineer.

The adjustment in compensation will also be subject to the following:

A. The compensation adjustments provided herein will be shown separately on payment estimates. The Contractor shall be liable to the County for decreased compensation adjustments and the County may deduct the amount thereof from any moneys due or that may become due the Contractor.

B. Compensation adjustments made under this section will be taken into account in making adjustments in conformance with the provisions in Section 4-1.03B, "Increased or Decreased Quantities," of the Standard Specifications.

C. In the event of an overrun of contract time, adjustment in compensation for paving asphalt included in estimates during the overrun period will be determined using the California Statewide Paving Asphalt Price Index in effect on the first business day of the month within the pay period in which the overrun began.

The California Statewide Paving Asphalt Price Index is determined each month on the first business day of the month by the Department using the median of posted prices in effect as posted by Chevron, Mobil, and Unocal for the Buena Vista, Huntington Beach, Kern River, Long Beach, Midway Sunset, and Wilmington fields.

In the event that the companies discontinue posting their prices for a field, the Department will determine an index from the remaining posted prices. The Department reserves the right to include in the index determination the posted prices of additional fields.

The California Statewide Paving Asphalt Price Index is available at the Division of Engineering Services website:

http://www.dot.ca.gov/hq/esc/oe/asphalt_index/astable.html

“ALLOWANCE FOR PAVING ASPHALT PRICE INDEX INCREASE” is a bid item that provides an allowance as part of the Contract Price for payment adjustments for Price Index Fluctuations in accordance with the provisions of this section, as directed or approved by the Engineer.

10-1.13 Minor Concrete: Minor concrete shall conform to the provisions of Section 73, "Concrete Curbs and Sidewalks," of the Standard Specifications and these Special Provisions. Minor concrete shall be constructed in accordance with San Luis Obispo County 2011 Public Improvement Standard Drawings C-2, C-2a, C-4, C-5, and D-5, Caltrans Standard Plans A88A and A88B, and as shown on the plans.
Class 2 aggregate base shall conform to the provisions of Section 26, "Aggregate Bases," of the Standard Specifications.

Attention is directed to Sections 90-10.05, "Protecting Minor Concrete," and 90-8.03, "Protecting Concrete Pavement," of the Standard Specifications. The Contractor shall provide pavement crossings for the convenience of public traffic. The material and work necessary for the construction of the crossings, and their subsequent removal and disposal, will be paid for at the contract unit price for Minor Concrete (Cross Gutter), and no additional compensation will be allowed therefore.

The contract unit price paid for "MINOR CONCRETE (CURB RAMP)" shall include full compensation for furnishing all labor, materials, tools, equipment and incidentals for constructing the curb ramp, complete in place, including removal and disposal of existing asphalt and concrete, removal and disposal of existing asphalt dike, clearing and grubbing, removal and disposal of existing vegetation, minor slope grading, subgrade preparation, class 2 aggregate base, reinforcing steel, adjusting or replacing existing utility valve vaults and signal box covers, backfill and removal of surplus material, as shown on the plans, as specified in the Standard Specifications and these Special Provisions, and as directed by the Engineer.

The contract price paid per linear foot for "MINOR CONCRETE (CURB AND GUTTER)" shall include full compensation for furnishing all labor, materials, tools, equipment and incidentals for constructing curb and gutter, complete in place, including removal and disposal of existing asphalt, remove and replace asphalt dike, clearing and grubbing, removal and disposal of existing vegetation, subgrade preparation, class 2 aggregate base, adjusting or replacing existing utility valve vaults, backfill and removal of surplus material, as shown on the plans, as specified in the Standard Specifications and these Special Provisions, and as directed by the Engineer.

10-1.14 Curb Ramp Detectable Warning System: Truncated Dome Mats shall be placed in accordance with the 2006 Caltrans Standard PlanA88A and these special provisions. Truncated Dome Mats shall be placed as a surface mounted mat with the following dimensions:

Length: 36 inches
Depth: 0.1875 (3/16"), (+/-) 5% max.
Face Thickness: 0.1875 (3/16"), (+/-) 5% max.
Warpage of Edge: 0.5% max.

Truncated Dome Mats shall be yellow and conform to Federal Color No. 33538. Color shall be homogeneous throughout the tile. Before placement the surface that the Truncated Dome Mat will be attached to shall be cleaned of loose material and dirt.

Prior to placing the Truncated Dome Mat care should be taken to make sure that the lip of the ramp meets the Caltrans Standard Plan A88A and is flush with the adjacent gutter, grinding may be necessary as determined by the Engineer.

The Contractor is responsible for the repair of the surface that truncated domes are being applied to. Placement of truncated domes on a Portland Concrete surface shall be achieved with a two stage epoxy. The mat edges shall be flush with the concrete surface and firmly cemented in place. Mat shall be cut and applied to utility box and valve covers for utility access and provide continuity of dome pattern. The manufacturer shall provide a written 5-year warranty for prefabricated detectable warning surfaces, guaranteeing replacement when there is defect in the dome shape, color fastness, sound-on-cane acoustic quality, resilience, or attachment. The warranty period shall begin upon acceptance of the contract. When applying truncated domes to an asphalt concrete surface, the truncated dome mat shall be made from a non-skid thermoplastic material and shall be melted onto the ramp.

The contract unit price paid for "TRUNCATED DOME MAT" shall include full compensation for furnishing all labor, materials, tools, equipment and incidentals, and for doing all the work involved in furnishing and installing truncated dome mat, complete in place, including, but not limited to, cleaning and repairing surfaces that truncated domes are applied to, as shown on the plans, as specified in the Standard Specifications and these Special Provisions, and as directed by the Engineer.

10-1.15 Detector Loops: Detector Loop sensor units and asphaltic concrete sealant for inductive detector loop installation will be Contractor-furnished and approved by the engineer.

Loop detectors shall be installed prior to placement of hot mix asphalt (HMA) overlay.

Loop wire shall be Type 2.

Detector Loop lead-in cable shall be Type B.

Slots shall be filled with elastomeric sealant or hot-melt rubberized asphalt sealant.

For detector loops, sides of the slot shall be vertical and the minimum radius of the slot entering and leaving the circular part of the loop shall be 1 ½ inches. Slot width shall be a maximum 1 ¾ inch. Loop wire for circular loops shall be Type 2. Slots of circular loops shall be filled with elastomeric sealant or hot melt rubberized asphalt sealant.

The depth of loop sealant above the top of the uppermost loop wire in the sawed slots shall be 2 inches, minimum.

Slots in asphalt concrete pavement shall be filled with asphaltic concrete sealant as follows:

A. After conductors are installed in the slots cut in pavement, paint binder (tack coat) shall be applied to the vertical surfaces of slots in conformance with the provisions in Section 39-4.02, "Prime Coat and Paint Binder (Tack Coat),' of the Standard Specifications

B. Temperature of sealant material during installation shall be above 21º C. Air temperature during installation shall be above 10º C. Sealant placed in the slots shall be compacted by use of a 8-inch diameter by 1/8 inch thick steel hand roller or other tool approved by the Engineer. Compacted sealant shall be flush with the pavement surface. Minimum conductor coverage shall be one inch. Excess sealant remaining after rolling shall not be used. On completion of rolling, traffic will be permitted to travel over the sealant.

Slots in Portland cement concrete shall be filled with elastomeric sealant or hot-melt rubberized asphalt sealant, or shall be filled with an epoxy sealant conforming to the provisions in Section 95-2.09, "Epoxy Sealant for Inductive Loops (State Specification 8040-06)," of the Standard Specifications.

The contract lump sum price paid for "DETECTOR LOOP" shall include full compensation for furnishing all labor, materials, tools, equipment, and incidentals, and for doing all the work involved in furnishing and installing Loop Detector components complete in place, including, but not limited to connection to existing systems, and system testing, to the satisfaction of the Engineer, and all incidentals, complete in place, as shown on the plans, as detailed in these Special Provisions and as directed by the Engineer, and no additional compensation shall be allowed therefore.

THIS PAGE LEFT BLANK INTENTIONALLY

SECTION 11. AMENDMENTS TO STANDARD SPECIFICATIONS

SECTION 5 CONTROL OF WORK
(Issued 06-01-11)

Add:

5-1.055 SUBCONTRACTING

5-1.055A General

No subcontract releases you from the contract or relieves you of your responsibility for a subcontractor's work.

If you violate Pub Cont Code § 4100 et seq., the Department may exercise the remedies provided under Pub Cont Code § 4110. The Department may refer the violation to the Contractors State License Board as provided under Pub Cont Code § 4111.

Except for a building-construction non-federal-aid contract, perform work equaling at least 30 percent of the value of the original total bid with your employees and with equipment owned or rented by you, with or without operators.

Each subcontract must comply with the contract.

The Department encourages you to include a dispute resolution process in each subcontract.

Each subcontractor must have an active and valid State contractor's license with a classification appropriate for the work to be performed (Bus & Prof Code, § 7000 et seq.).

Submit copies of subcontracts upon request.

Before subcontracted work starts, submit a Subcontracting Request form.

Do not use a debarred contractor; a current list of debarred contractors is available at the Department of Industrial Relations' Web site.

Upon request, immediately remove and not again use a subcontractor who fails to prosecute the work satisfactorily.

5-1.116 DIFFERING SITE CONDITIONS (23 CFR 635.109)

5-1.116A Contractor's Notification

Promptly notify the Engineer if you find either of the following:

1. Physical conditions differing materially from either of the following:

    1.1. Contract documents
    1.2. Job site examination

2. Physical conditions of an unusual nature, differing materially from those ordinarily encountered and generally recognized as inherent in the work provided for in the contract

Include details explaining the information you relied on and the material differences you discovered.

If you fail to notify the Engineer promptly, you waive the differing site condition claim for the period between your discovery of the differing site condition and your notification to the Engineer.

If you disturb the site after discovery and before the Engineer's investigation, you waive the differing site condition claim.

5-1.116B Engineer's Investigation and Decision

Upon your notification, the Engineer investigates job site conditions and:

1. Notifies you whether to resume affected work
2. Decides whether the condition differs materially and is cause for an adjustment of time, payment, or both

You may protest the Engineer's decision.

SECTION 6 CONTROL OF MATERIALS
(Issued 05-01-09)

Replace Section 6-1.05 with:

6-1.05 SPECIFIC BRAND OR TRADE NAME AND SUBSTITUTION

A reference to a specific brand or trade name establishes a quality standard and is not intended to limit competition. You may use a product that is equal to or better than the specified brand or trade name if approved.

Submit a substitution request within a time period that:

1. Follows Contract award
2. Allows 30 days for review
3. Causes no delay

Include substantiating data with the substitution request that proves the substitution:

1. Is of equal or better quality and suitability
2. Causes no delay in product delivery and installation

6-1.075 GUARANTEE

Guarantee the work remains free from substantial defects for 1 year after contract acceptance except for work parts for which you were relieved of maintenance and protection. Guarantee each of these relieved work parts for 1 year after the relief date.

The guarantee excludes damage or displacement caused by an event outside your control including:

1. Normal wear and tear
2. Improper operation
3. Insufficient maintenance
4. Abuse

5. Unauthorized change
6. Act of God

During the guarantee period, repair or replace each work portion having a substantial defect.

The Department does not pay for corrective work.

During corrective work activities, provide insurance coverage specified for coverage before contract acceptance.

The contract bonds must be in full force and effect until the later of:

1. Expiration of guarantee period
2. Completion of corrective work

If a warranty specification conflicts with Section 6-1.075, "Guarantee," comply with the warranty specification.

During the guarantee period, the Engineer monitors the completed work. If the Engineer finds work having a substantial defect, the Engineer lists work parts and furnishes you the list.

Within 10 days of receipt of the list, submit for authorization a detailed plan for correcting the work. Include a schedule that includes:

1. Start and completion dates
2. List of labor, equipment, materials, and any special services you plan to use
3. Work related to the corrective work, including traffic control and temporary and permanent pavement markings

The Engineer notifies you when the plan is authorized. Start corrective work and related work within 15 days of notice.

If the Engineer determines corrective work is urgently required to prevent injury or property damage:

1. The Engineer furnishes you a request to start emergency repair work and a list of parts requiring corrective work
2. Mobilize within 24 hours and start work
3. Submit a corrective work plan within 5 days of starting emergency repair work

If you fail to perform work as specified, the Department may perform the work and bill you.

SECTION 9 MEASUREMENT AND PAYMENT
(Issued 03-11-10)

In Section 9-1.03A replace the 2nd paragraph with:

To the total of the direct costs computed as provided in Sections 9-1.03A(1), "Labor," 9-1.03A(2), "Materials," and 9-1.03A(3), "Equipment Rental," there will be added a markup of 35 percent to the cost of labor, 15 percent to the cost of materials, and 15 percent to the cost of equipment rental.

In Section 9-1.03A replace the 4th paragraph with:

If a subcontractor performs work at force account, accept an additional 10 percent markup to the total cost of that work paid at force account, including markups specified in Section 9-1.03, "Force Account Payment," as reimbursement for additional administrative costs.

Replace Section 9-1.03B with:

The Contractor, and all subcontractors obtained before or after contract execution, shall itemize the labor, material, and equipment rental costs, and shall not be deemed specialists unless the selected Contractor or available subcontractors on site are not capable of performing the specialty work and it is not the special service industry's established practice to provide cost itemization. In addition, the Engineer may approve work required to be performed at an off-site manufacturing plant or machine shop to be paid as a non-itemized specialist billing. To obtain approval as a specialist, the Contractor shall submit on behalf of the subcontractor a request to the Engineer prior to the start of the proposed specialist work.

If approval is granted, the Engineer will accept the non-itemized invoices for specialty work performed, provided the invoices are at current market rates. Markup percentages of Section 9-1.03A, "Work Performed by Contractor," will not apply. A markup of 10 percent will be added to the total cost of the extra work. The 10 percent markup shall reimburse the Contractor for additional administrative costs, and no other payment will be made by reason of performance of the extra work by a specialist.

If approval is not granted prior to the start of the proposed specialty work, the Contractor or subcontractor shall itemize labor, material, and equipment rental costs and apply percentage markups as required by Section 9-1.03A, "Work Performed by Contractor."

In Section 9-1.03C delete the 6th paragraph.

SECTION 12 CONSTRUCTION AREA TRAFFIC CONTROL DEVICES
(Issued 11-07-08)

In Section 12-1.01 in the 2nd paragraph, replace the 1st sentence with:

Attention is directed to Part 6 of the California MUTCD.

Replace Section 12-2.01 with:

12-2.01 FLAGGERS

Flaggers while on duty and assigned to traffic control or to give warning to the public that the highway is under construction and of any dangerous conditions to be encountered as a result thereof, shall perform their duties and shall be provided with the necessary equipment in conformance with Part 6 of the California MUTCD. The equipment shall be furnished and kept clean and in good repair by the Contractor at the Contractor's expense.

All flaggers shall wear safety apparel meeting the requirements of ANSI/ISEA 107-2004 for Class 2 or 3 garment and complying with 71 Fed Reg 67792.

In Section 12-3.01 replace the 1st paragraph with:

In addition to the requirements in Part 6 of the California MUTCD, all devices used by the Contractor in the performance of the work shall conform to the provisions in this Section 12-3.

In Section 12-3.06 in the 1st paragraph, replace the 2nd sentence with:

Construction area signs are shown in or referred to in Part 6 of the California MUTCD.

In Section 12-3.06 in the 4th paragraph, replace the 1st sentence with:

All construction area signs shall conform to the dimensions, color and legend requirements of the plans, Part 6 of the California MUTCD and these specifications.

In Section 12-3.06 in the 8th paragraph, replace the 1st sentence with:

Used signs with the specified sheeting material will be considered satisfactory if they conform to the requirements for visibility and legibility and the colors conform to the requirements in Part 6 of the California MUTCD.

SECTION 14 (BLANK)
(Issued 06-01-11)

Replace Section 14 with:

SECTION 14 ENVIRONMENTAL STEWARDSHIP

14-1 GENERAL

14-1.01 GENERAL

Environmental stewardship includes both environmental compliance and environmental resource management.

If an ESA is shown on the plans:

1. The boundaries shown are approximate; the Department marks the exact boundaries on the ground
2. Do not enter the ESA unless authorized
3. If the ESA is breached, immediately:
   3.1. Secure the area and stop all operations within 60 feet of the ESA boundary
   3.2. Notify the Engineer
4. If the ESA is damaged, the Department determines what efforts are necessary to remedy the damage and who performs the remedy; you are responsible for remedies and charges.

14-2 CULTURAL RESOURCES

14-2.01 GENERAL

Reserved

14-2.02 ARCHAEOLOGICAL RESOURCES

If archaeological resources are discovered at the job site, do not disturb the resources and immediately:

1. Stop all work within a 60-foot radius of the discovery
2. Protect the discovery area
3. Notify the Engineer

The Department investigates. Do not take archaeological resources from the job site. Do not resume work within the discovery area until authorized.

If, in the opinion of the Engineer, completion of the work is delayed or interfered with by reason of an archaeological find, or investigation or recovery of archeological materials, you will be compensated for resulting losses, and an extension of time will be granted, in the same manner as provided for in Section 8-1.09, "Right of Way Delays."

If ordered, furnish resources to assist in the investigation or recovery of archaeological resources. This work will be paid for as extra work as specified in Section 4-1.03D, "Extra Work."

14-2.03 ARCHAEOLOGICAL MONITORING AREA

Section 14-2.03 applies if an AMA is described in the Contract.

The Department assigns an archaeological monitor to monitor job site activities within the AMA. Do not work within the AMA unless the archeological monitor is present.

The Engineer and the Department archaeological monitor conduct an AMA location field review with you at least 5 business days before start of work. The Department marks the exact boundaries of the AMA on the ground.

If temporary fence (Type ESA) for an AMA is described in the Contract, install temporary fence (Type ESA) to define the boundaries of the AMA during the AMA location field review.

At least 5 business days before starting work within an AMA, submit a schedule of days and hours to be worked for the Engineer's approval. If you require changes in the schedule, submit an update for the Engineer's approval at least 5 business days before any changed work day.

If archaeological resources are discovered within an AMA, comply with Section 14-2.02, "Archaeological Resources."

14-2.04 HISTORIC STRUCTURES

Reserved

14-3 COMMUNITY IMPACTS AND ENVIRONMENTAL JUSTICE

Reserved

14-4 NATIVE AMERICAN CONCERNS

Reserved

14-5 AESTHETICS

Reserved

14-6 BIOLOGICAL RESOURCES

14-6.01 GENERAL

Reserved

14-6.02 BIRD PROTECTION

Protect migratory and nongame birds, their occupied nests, and their eggs.

The Department anticipates nesting or attempted nesting from February 15 to September 1.

The federal Migratory Bird Treaty Act, 16 USC § 703–711, and 50 CFR Pt 10 and Fish & Game Code §§ 3503, 3513, and 3800 protect migratory and nongame birds, their occupied nests, and their eggs.

The federal Endangered Species Act of 1973, 16 USC §§ 1531 and 1543, and the California Endangered Species Act, Fish & Game Code §§ 2050–2115.5, prohibit the take of listed species and protect occupied and unoccupied nests of threatened and endangered bird species.

The Bald and Golden Eagle Protection Act, 16 USC § 668, prohibits the destruction of bald and golden eagles and their occupied and unoccupied nests.

If migratory or nongame bird nests are discovered that may be adversely affected by construction activities or an injured or killed bird is found, immediately:

1. Stop all work within a 100-foot radius of the discovery.
2. Notify the Engineer.

The Department investigates. Do not resume work within the specified radius of the discovery until authorized.

When ordered, use exclusion devices, take nesting prevention measures, remove and dispose of partially constructed and unoccupied nests of migratory or nongame birds on a regular basis to prevent their occupation, or perform any combination of these. This work will be paid for as extra work as specified in Section 4-1.03D, "Extra Work."

Prevent nest materials from falling into waterways.

Bird protection that causes a delay to the controlling activity is a condition unfavorable to the suitable prosecution of work as specified in Section 8-1.05, "Temporary Suspension of Work."

14-7 PALEONTOLOGICAL RESOURCES

If paleontological resources are discovered at the job site, do not disturb the material and immediately:

1. Stop all work within a 60-foot radius of the discovery
2. Protect the area
3. Notify the Engineer

The Department investigates and modifies the dimensions of the protected area if necessary. Do not take paleontological resources from the job site. Do not resume work within the specified radius of the discovery until authorized.

14-8 NOISE AND VIBRATION

14-8.01 GENERAL

Reserved

14-8.02 NOISE CONTROL

Do not exceed 86 dBa at 50 feet from the job site activities from 9 p.m. to 6 a.m.

Equip an internal combustion engine with the manufacturer-recommended muffler. Do not operate an internal combustion engine on the job site without the appropriate muffler.

14-9 AIR QUALITY

14-9.01 AIR POLLUTION CONTROL

Comply with air pollution control rules, regulations, ordinances, and statutes that apply to work performed under the Contract, including air pollution control rules, regulations, ordinances, and statutes provided in Govt Code § 11017 (Pub Cont Code § 10231).

Do not burn material to be disposed of.

14-9.02 DUST CONTROL

Prevent and alleviate dust by applying water, dust palliative, or both under Section 14-9.01.

Apply water under Section 17, "Watering."

Apply dust palliative under Section 18,"Dust Palliative."

If ordered, apply water, dust palliative, or both to control dust caused by public traffic. This work will be paid for as extra work as specified in Section 4-1.03D, "Extra Work."

14-10 SOLID WASTE DISPOSAL AND RECYCLING

14-10.01 SOLID WASTE DISPOSAL AND RECYCLING

Submit an annual Solid Waste Disposal and Recycling Report between January 1 and 15 for each year work is performed under the Contract at any time during the previous calendar year. Show the types and amounts of project-generated solid waste taken to or diverted from landfills or reused on the project from January 1 through December 31 of the previous calendar year.

Submit a final annual Solid Waste Disposal and Recycling Report within 5 business days after Contract acceptance. Show the types and amounts of project-generated solid waste taken to or diverted from landfills or reused on the project from January 1 to Contract acceptance.

For each failure to submit a completed form, the Department withholds $10,000.

14-11 HAZARDOUS WASTE AND CONTAMINATION

14-11.01 GENERAL

Reserved

14-11.02 ASBESTOS AND HAZARDOUS SUBSTANCES

Upon discovery, immediately stop working in and notify the Engineer of areas where asbestos or a hazardous substance is present if the:

1. Contractor reasonably believes the substance is asbestos as defined in Labor Code § 6501.7 or a hazardous substance as defined in Health & Safety Code §§ 25316 and 25317
2. Presence is not described in the Contract
3. Substance has not been made harmless

14-12 OTHER INTERAGENCY RELATIONS

Reserved

14-13 PAYMENT

Payment for work specified in Section 14 is included in the payment for the bid items involved unless:

1. Bid item for the work is shown in the verified Bid Item List
2. Work is specified as paid for as extra work

SECTION 15 EXISTING HIGHWAY FACILITIES

(Issued 05-01-09)

In Section 15-1.02 replace the 1st paragraph with:

Existing facilities which are to remain in place shall be protected in conformance with the provisions in Sections 5-1.18, "Property and Facility Preservation," and 7-1.12, "Indemnification and Insurance."

SECTION 19 EARTHWORK

(Issued 09-16-11)

Replace Section 19-1.02 with:

19-1.02 (BLANK)

Replace Section 19-1.03 with:

19-1.03 GRADE TOLERANCE

Immediately prior to placing subsequent layers of material thereon, the grading plane shall conform to one of the following:

A. When hot mix asphalt is to be placed on the grading plane, the grading plane at any point shall not vary more than 0.05 foot above or below the grade established by the Engineer.
B. When subbase or base material to be placed on the grading plane is to be paid for by the ton, the grading plane at any point shall not vary more than 0.10 foot above or below the grade established by the Engineer.
C. When the material to be placed on the grading plane is to be paid for by the cubic yard, the grading plane at any point shall be not more than 0.05 foot above the grade established by the Engineer.

In Section 19-3.025C replace the 1st paragraph with:

Cementitious material used in soil cement bedding shall conform to the provisions in Section 90-2.01, "Cementitious Materials." Supplementary cementitious material will not be required.

In Section 19-3.025C replace the 4th paragraph with:

The aggregate, cementitious material, and water shall be proportioned either by weight or by volume. Soil cement bedding shall contain not less than 282 pounds of cementitious material per cubic yard. The water content shall be sufficient to produce a fluid, workable mix that will flow and can be pumped without segregation of the aggregate while being placed.

In Section 19-3.06 replace the 9th paragraph with:

Unless otherwise shown on the plans or specified in these specifications or the special provisions, material for structure backfill to be compacted to a relative compaction of not less than 90 percent, except material to be placed behind retaining walls, shall consist of material free of rocks, broken concrete, other solid material exceeding 3 inches in greatest dimension, or organic or other unsatisfactory material.

In Section 19-3.062 replace the 1st paragraph with:

Slurry cement backfill shall consist of a fluid, workable mixture of aggregate, cementitious material, and water.

In Section 19-3.062 replace the 5th paragraph with:

Cementitious material shall conform to the provisions in Section 90-2.01, "Cementitious Materials." Supplementary cementitious material will not be required.

In Section 19-3.062 replace the 8th paragraph with:

The aggregate, cementitious material, and water shall be proportioned either by weight or by volume. Slurry cement backfill shall contain not less than 188 pounds of cementitious material per cubic yard. The water content shall be sufficient to produce a fluid, workable mix that will flow and can be pumped without segregation of the aggregate while being placed.

SECTION 26 AGGREGATE BASES
(Issued 02-16-07)

In Section 26-1.02A replace the 1st paragraph with:

Aggregate must be clean and free from organic matter and other deleterious substances. Aggregate must consist of any combination of:

1. Broken stone
2. Crushed gravel
3. Natural rough surfaced gravel
4. Sand
5. Up to 100 percent of any combination of processed:

    5.1. Asphalt concrete
    5.2. Portland cement concrete
    5.3. Lean concrete base
    5.4. Cement treated base

In Section 26-1.02B replace the 1st paragraph with:

Aggregate must be clean and free from organic matter and other deleterious substances. Aggregate must consist of any combination of:

1. Broken stone
2. Crushed gravel
3. Natural rough surfaced gravel
4. Sand
5. Up to 100 percent of any combination of processed:

5.1. Asphalt concrete
5.2. Portland cement concrete
5.3. Lean concrete base
5.4. Cement treated base

SECTION 37 BITUMINOUS SEALS
(Issued 06-05-09)

In Section 37-1.03 replace the 4th through 6th paragraphs with:

On 2-lane two-way roadways, W8-7 "LOOSE GRAVEL" signs and W13-1 (35) speed advisory signs shall be furnished and placed adjacent to both sides of the traveled way where screenings are being spread on a traffic lane. The first W8-7 sign in each direction shall be placed where traffic first encounters loose screenings, regardless of which lane the screenings are being spread on. The W13-1 (35) signs need not be placed in those areas with posted speed limits of less than 40 MPH. The signs shall be placed at maximum 2,000-foot intervals along each side of the traveled way and at public roads or streets entering the seal coat area as directed by the Engineer.

On multilane roadways (freeways, expressways and multilane conventional highways) where screenings are being spread on a traffic lane, W8-7 "LOOSE GRAVEL" signs and W13-1 (35) speed advisory signs shall be furnished and placed adjacent to the outside edge of the traveled way nearest to the lane being worked on. The first W8-7 sign shall be placed where the screenings begin with respect to the direction of travel on that lane. The W13-1 (35) signs need not be placed in those areas with posted speed limits of less than 40 MPH. The signs shall be placed at maximum 2,000-foot intervals along the edge of traveled way and at on-ramps, public roads or streets entering the seal coat area as directed by the Engineer.

The W8-7 and W13-1 signs shall be maintained in place at each location until final brooming of the seal coat surface at that location is completed. The W8-7 and W13-1 signs shall conform to the provisions for construction area signs in Section 12, "Construction Area Traffic Control Devices." The signs may be set on temporary portable supports with the W13-1 below the W8-7 or on barricades with the W13-1 sign alternating with the W8-7 sign.

In Section 37-1.07 replace the 2nd paragraph with:

Rollers shall be oscillating type pneumatic-tired rollers. A minimum of 2 pneumatic-tired rollers conforming to the provisions in Section 39-3.03 "Spreading and Compacting Equipment," shall be furnished.

In Section 37-1.09 replace the 2nd paragraph with:

The above prices and payments shall include full compensation for furnishing all labor, materials, tools, equipment and incidentals, and for doing all the work involved in applying seal coat, complete in place, including furnishing, placing, maintaining, and removing W8-7 and W13-1 signs, when required, and temporary supports or barricades for the signs, as shown on the plans, and as specified in these specifications and the special provisions, and as directed by the Engineer.

In Section 37-2.05 replace the 6th paragraph with:

In addition to conforming to the provisions in Section 5-1.10, "Equipment," the identifying number of mixer-spreader trucks shall be at least 2 inches in height, located on the front and rear of the vehicle.

SECTION 39 ASPHALT CONCRETE
(Issued 10-19-12)

Replace Section 39 with:

SECTION 39 HOT MIX ASPHALT

39-1 GENERAL

39-1.01 DESCRIPTION

Section 39 includes specifications for producing and placing hot mix asphalt (HMA) by mixing aggregate and asphalt binder at a mixing plant and spreading and compacting the HMA mixture.

The special provisions specify one or more types of HMA, including:

1. Type A
2. Type B
3. Open graded friction course (OGFC). OGFC includes hot mix asphalt (open graded)[HMA-O], rubberized hot mix asphalt (open graded) [RHMA-O] and rubberized hot mix asphalt (open graded high binder) [RHMA-O-HB]
4. Rubberized hot mix asphalt (gap graded) [RHMA-G]

The special provisions specify the HMA construction process, including:

1. Standard
2. Method
3. Quality Control / Quality Assurance (QC / QA)

39-1.02 MATERIALS

39-1.02A Geosynthetic Pavement Interlayer

Geosynthetic pavement interlayer must comply with the specifications in Section 88-1.07, "Pavement Interlayer," for the type of interlayer shown on the plans.

39-1.02B Tack Coat

Tack coat must comply with the specifications for asphaltic emulsion in Section 94, "Asphaltic Emulsion," or asphalt binder in Section 92, "Asphalts." Choose the type and grade.

Notify the Engineer if you dilute asphaltic emulsion with water. The weight ratio of added water to asphaltic emulsion must not exceed 1 to 1.

Measure added water either by weight or volume in compliance with the specifications for weighing, measuring, and metering devices under Section 9-1.01, "Measurement of Quantities," or you may use water meters from water districts, cities, or counties. If you measure water by volume, apply a conversion factor to determine the correct weight.

With each dilution, submit in writing:

1. The weight ratio of water to bituminous material in the original asphaltic emulsion
2. The weight of asphaltic emulsion before diluting
3. The weight of added water
4. The final dilution weight ratio of water to asphaltic emulsion

39-1.02C Asphalt Binder

Asphalt binder in HMA must comply with Section 92, "Asphalts," or Section 39-1.02D, "Asphalt Rubber Binder." The special provisions specify the grade.

Asphalt binder for geosynthetic pavement interlayer must comply with Section 92, "Asphalts." Choose from Grades PG 64-10, PG 64-16, or PG 70-10.

39-1.02D Asphalt Rubber Binder

General

Use asphalt rubber binder in RHMA-G, RHMA-O, and RHMA-O-HB. Asphalt rubber binder must be a combination of:

1. Asphalt binder
2. Asphalt modifier
3. Crumb rubber modifier (CRM)

The combined asphalt binder and asphalt modifier must be 80.0 ± 2.0 percent by weight of the asphalt rubber binder.

Asphalt Modifier

Asphalt modifier must be a resinous, high flash point, and aromatic hydrocarbon, and comply with:

Asphalt Modifier for Asphalt Rubber Binder

Quality Characteristic	ASTM	Specification
Viscosity, m^2/s (x 10^{-6}) at 100 °C	D 445	X ± 3 [a]
Flash Point, CL.O.C., °C	D 92	207 minimum
Molecular Analysis		
Asphaltenes, percent by mass	D 2007	0.1 maximum
Aromatics, percent by mass	D 2007	55 minimum

Note:
[a] The symbol "X" is the proposed asphalt modifier viscosity. "X" must be between 19 and 36. A change in "X" requires a new asphalt rubber binder design.

Asphalt modifier must be from 2.0 percent to 6.0 percent by weight of the asphalt binder in the asphalt rubber binder.

Crumb Rubber Modifier

CRM consists of a ground or granulated combination of scrap tire CRM and high natural CRM. CRM must be 75.0 ± 2.0 percent scrap tire CRM and 25.0 ± 2.0 percent high natural CRM by total weight of CRM. Scrap tire CRM must be from any combination of automobile tires, truck tires, or tire buffings.

Sample and test scrap tire CRM and high natural CRM separately. CRM must comply with:

Crumb Rubber Modifier for Asphalt Rubber Binder

Quality Characteristic	Test Method	Specification
Scrap tire CRM gradation (% passing No. 8 sieve)	LP-10	100
High natural CRM gradation (% passing No. 10 sieve)	LP-10	100
Wire in CRM (% max.)	LP-10	0.01
Fabric in CRM (% max.)	LP-10	0.05
CRM particle length (inch max.) [a]	--	3/16
CRM specific gravity [a]	CT 208	1.1 – 1.2
Natural rubber content in high natural CRM (%) [a]	ASTM D 297	40.0 – 48.0

Note
:
[a] Test at mix design and for Certificate of Compliance.

Only use CRM ground and granulated at ambient temperature. If steel and fiber are cryogenically separated, it must occur before grinding and granulating. Only use cryogenically

produced CRM particles that can be ground or granulated and not pass through the grinder or granulator.

CRM must be dry, free-flowing particles that do not stick together. CRM must not cause foaming when combined with the asphalt binder and asphalt modifier. You may add calcium carbonate or talc up to 3 percent by weight of CRM.

Asphalt Rubber Binder Design and Profile

Submit in writing an asphalt rubber binder design and profile that complies with the asphalt rubber binder specifications. In the design, designate the asphalt, asphalt modifier, and CRM and their proportions. The profile is not a performance specification and only serves to indicate expected trends in asphalt rubber binder properties during binder production. The profile must include the same component sources for the asphalt rubber binder used.

Design the asphalt rubber binder from testing you perform for each quality characteristic and for the reaction temperatures expected during production. The 24-hour (1,440-minute) interaction period determines the design profile. At a minimum, mix asphalt rubber binder components, take samples, and perform and record the following tests:

Asphalt Rubber Binder Reaction Design Profile

Test	Minutes of Reaction [a]							Limits
	45	60	90	120	240	360	1440	
Cone penetration @ 77 °F, 0.10-mm (ASTM D 217)	X [b]				X		X	25 - 70
Resilience @ 77 °F, percent rebound (ASTM D 5329)	X				X		X	18 min.
Field softening point, °F (ASTM D 36)	X				X		X	125 - 165
Viscosity, centipoises (LP-11)	X	X	X	X	X	X	X	1,500 - 4,000

Notes:

[a] Six hours (360 minutes) after CRM addition, reduce the oven temperature to 275 °F for a period of 16 hours. After the 16-hour (1320 minutes) cool-down after CRM addition, reheat the binder to the reaction temperature expected during production for sampling and testing at 24 hours (1440 minutes).

[b] "X" denotes required testing

Asphalt Rubber Binder

After interacting for a minimum of 45 minutes, asphalt rubber binder must comply with:

Asphalt Rubber Binder

Quality Characteristic	Test for Quality Control or Acceptance	Test Method	Specification	
			Minimum	Maximum
Cone penetration @ 77 °F, 0.10-mm	Acceptance	ASTM D 217	25	70
Resilience @ 77 °F, percent rebound	Acceptance	ASTM D 5329	18	--
Field softening point, °F	Acceptance	ASTM D 36	125	165
Viscosity @ 375 °F, centipoises	Quality Control	LP-11	1,500	4,000

39-1.02E Aggregate

Aggregate must be clean and free from deleterious substances. Aggregate:

1. Retained on the No. 4 sieve is coarse
2. Passing the No. 4 sieve is fine
3. Added and passing the No. 30 sieve is supplemental fine, including:

    3.1. Hydrated lime
    3.2. Portland cement
    3.3. Fines from dust collectors

The special provisions specify the aggregate gradation for each HMA type.

The specified aggregate gradation is before the addition of asphalt binder and includes supplemental fines. The Engineer tests for aggregate grading under California Test 202, modified by California Test 105 if there is a difference in specific gravity of 0.2 or more between the coarse and fine parts of different aggregate blends.

Choose a sieve size target value (TV) within each target value limit presented in the aggregate gradation tables.

Aggregate Gradation
(Percentage Passing)
HMA Types A and B

3/4–inch HMA Types A and B

Sieve Sizes	Target Value Limits	Allowable Tolerance
1"	100	—
3/4"	90 - 100	TV ±5
1/2"	70 - 90	TV ±6
No. 4	45 - 55	TV ±7
No. 8	32 - 40	TV ±5
No. 30	12 - 21	TV ±4
No. 200	2 - 7	TV ±2

1/2–inch HMA Types A and B

Sieve Sizes	Target Value Limits	Allowable Tolerance
3/4"	100	—
1/2"	95 - 99	TV ±6
3/8"	75 - 95	TV ±6
No. 4	55 - 66	TV ±7
No. 8	38 - 49	TV ±5
No. 30	15 - 27	TV ±4
No. 200	2 - 8	TV ±2

3/8–inch HMA Types A and B

Sieve Sizes	Target Value Limits	Allowable Tolerance
1/2"	100	—
3/8"	95 - 100	TV ±6
No. 4	58 - 72	TV ±7
No. 8	34 - 48	TV ±6
No. 30	18 - 32	TV ±5
No. 200	2 - 9	TV ±2

No. 4 HMA Types A and B

Sieve Sizes	Target Value Limits	Allowable Tolerance
3/8"	100	—
No. 4	95 - 100	TV ±7
No. 8	72 - 77	TV ±7
No. 30	37 - 43	TV ±7
No. 200	2 - 12	TV ±4

Rubberized Hot Mix Asphalt - Gap Graded (RHMA-G)

3/4–inch RHMA-G

Sieve Sizes	Target Value Limits	Allowable Tolerance
1"	100	—
3/4"	95 - 100	TV ±5
1/2"	83 - 87	TV ±6
3/8"	65 - 70	TV ±6
No. 4	28 - 42	TV ±7
No. 8	14 - 22	TV ±5
No. 200	0 - 6	TV ±2

1/2–inch RHMA-G

Sieve Sizes	Target Value Limits	Allowable Tolerance
3/4"	100	—
1/2"	90 - 100	TV ±6
3/8"	83 - 87	TV ±6
No. 4	28 - 42	TV ±7
No. 8	14 - 22	TV ±5
No. 200	0 - 6	TV ±2

Open Graded Friction Course (OGFC)

1–inch OGFC

Sieve Sizes	Target Value Limits	Allowable Tolerance
1 1/2"	100	—
1"	99 - 100	TV ±5
3/4"	85 - 96	TV ±5
1/2"	55 - 71	TV ±6
No. 4	10 - 25	TV ±7
No. 8	6 - 16	TV ±5
No. 200	1 - 6	TV ±2

1/2–inch OGFC

Sieve Sizes	Target Value Limits	Allowable Tolerance
3/4"	100	—
1/2"	95 - 100	TV ±6
3/8"	78 - 89	TV ±6
No. 4	28 - 37	TV ±7
No. 8	7 - 18	TV ±5
No. 30	0 - 10	TV ±4
No. 200	0 - 3	TV ±2

3/8–inch OGFC

Sieve Sizes	Target Value Limits	Allowable Tolerance
1/2"	100	—
3/8"	90 - 100	TV ±6
No. 4	29 - 36	TV ±7
No. 8	7 - 18	TV ±6
No. 30	0 - 10	TV ±5
No. 200	0 - 3	TV ±2

Before the addition of asphalt binder and lime treatment, aggregate must comply with:

Aggregate Quality

Quality Characteristic	Test Method	HMA Type			
		A	B	RHMA-G	OGFC
Percent of crushed particles	CT 205				
Coarse aggregate (% min.)					
One fractured face		90	25	--	90
Two fractured faces		75	--	90	75
Fine aggregate (% min) (Passing No. 4 sieve and retained on No. 8 sieve.) One fractured face		70	20	70	90
Los Angeles Rattler (% max.)	CT 211				
Loss at 100 Rev.		12	--	12	12
Loss at 500 Rev.		45	50	40	40
Sand equivalent (min.) [a]	CT 217	47	42	47	--
Fine aggregate angularity (% min.) [b]	CT 234	45	45	45	--
Flat and elongated particles (% max. by weight @ 5:1)	CT 235	10	10	10	10

Notes:

[a] Reported value must be the average of 3 tests from a single sample.

[b] The Engineer waives this specification if HMA contains 10 percent or less of nonmanufactured sand by weight of total aggregate. Manufactured sand is fine aggregate produced by crushing rock or gravel.

39-1.02F Reclaimed Asphalt Pavement

You may produce HMA using reclaimed asphalt pavement (RAP). HMA produced using RAP must comply with the specifications for HMA except aggregate quality specifications do not apply to RAP. You may substitute RAP aggregate for a part of the virgin aggregate in HMA in a quantity not exceeding 15.0 percent of the aggregate blend. Do not use RAP in OGFC and RHMA-G.

Assign the substitution rate of RAP aggregate for virgin aggregate with the job mix formula (JMF) submittal. The JMF must include the percent of RAP used. If you change your assigned RAP aggregate substitution rate by more than 5 percent (within the 15.0 percent limit), submit a new JMF.

Process RAP from asphalt concrete. You may process and stockpile RAP throughout the project's life. Prevent material contamination and segregation. Store RAP in stockpiles on smooth surfaces free of debris and organic material. Processed RAP stockpiles must consist only of homogeneous RAP.

39-1.03 HOT MIX ASPHALT MIX DESIGN REQUIREMENTS

39-1.03A General

A mix design consists of performing California Test 367 and laboratory procedures on combinations of aggregate gradations and asphalt binder contents to determine the optimum

binder content (OBC) and HMA mixture qualities. If RAP is used, use Laboratory Procedure LP-9. The result of the mix design becomes the proposed JMF.

Use Form CEM-3512 to document aggregate quality and mix design data. Use Form CEM-3511 to present the JMF.

Laboratories testing aggregate qualities and preparing the mix design and JMF must be qualified under the Department's Independent Assurance Program. Take samples under California Test 125.

The Engineer reviews the aggregate qualities, mix design, and JMF and verifies and accepts the JMF.

You may change the JMF during production. Do not use the changed JMF until the Engineer accepts it. Except when adjusting the JMF in compliance with Section 39-1.03E, "Job Mix Formula Verification," perform a new mix design and submit in writing a new JMF submittal for changing any of the following:

1. Target asphalt binder percentage
2. Asphalt binder supplier
3. Asphalt rubber binder supplier
4. Component materials used in asphalt rubber binder or percentage of any component materials
5. Combined aggregate gradation
6. Aggregate sources
7. Substitution rate for RAP aggregate of more than 5 percent
8. Any material in the JMF

For OGFC, submit in writing a complete JMF submittal except asphalt binder content. The Engineer determines the asphalt binder content under California Test 368 within 20 days of your complete JMF submittal and provides you a Form CEM-3513.

39-1.03B Hot Mix Asphalt Mix Design

Perform a mix design that produces HMA in compliance with:

Hot Mix Asphalt Mix Design Requirements

Quality Characteristic	Test Method	HMA Type		
		A	B	RHMA-G
Air voids content (%)	CT 367[a]	4.0	4.0	Special Provisions
Voids in mineral aggregate (% min.)	LP-2			
No. 4 grading		17.0	17.0	--
3/8" grading		15.0	15.0	--
1/2" grading		14.0	14.0	18.0 – 23.0[b]
3/4" grading		13.0	13.0	18.0 – 23.0[b]
Voids filled with asphalt (%)	LP-3			
No. 4 grading		76.0 – 80.0	76.0 – 80.0	Note d
3/8" grading		73.0 – 76.0	73.0 – 76.0	
1/2" grading		65.0 – 75.0	65.0 – 75.0	
3/4" grading		65.0 – 75.0	65.0 – 75.0	
Dust proportion	LP-4			
No. 4 and 3/8" gradings		0.9 – 2.0	0.9 – 2.0	Note d
1/2" and 3/4" gradings		0.6 – 1.3	0.6 – 1.3	
Stabilometer value (min.) [c]	CT 366			
No. 4 and 3/8" gradings		30	30	--
1/2" and 3/4" gradings		37	35	23

Notes
:
[a] Calculate the air voids content of each specimen using California Test 309 and Lab Procedure LP-1. Modify California Test 367, Paragraph C5, to use the exact air voids content specified in the selection of OBC.
[b] Voids in mineral aggregate for RHMA-G must be within this range.
[c] Modify California Test 304, Part 2.B.2.c: "After compaction in the compactor, cool to 140 °± 5 °F by allowing the briquettes to cool at room temperature for 0.5-hour, then place the briquettes in the oven at 140 °F for a minimum of 2 hours and not more than 3 hours."
[d] Report this value in the JMF submittal.

For stability and air voids content, prepare 3 briquettes at the OBC and test for compliance. Report the average of 3 tests. Prepare new briquettes and test if the range of stability for the 3 briquettes is more than 8 points. The average air void content may vary from the specified air void content by ±0.5 percent.

You may use the briquettes used for stability testing to determine bulk specific gravity under CT 308. If you use the same briquettes and tests using bulk specific gravity fail, you may prepare 3 new briquettes and determine a new bulk specific gravity.

39-1.03C Job Mix Formula Submittal

Each JMF submittal must consist of:

1. Proposed JMF on Form CEM-3511
2. Mix design documentation on Form CEM-3512 dated within 12 months of submittal
3. JMF verification on Form CEM-3513, if applicable

4. JMF renewal on Form CEM-3514, if applicable
5. Materials Safety Data Sheets (MSDS) for:

    5.1. Asphalt binder
    5.2. Base asphalt binder used in asphalt rubber binder
    5.3. CRM and asphalt modifier used in asphalt rubber binder
    5.4. Blended asphalt rubber binder mixture
    5.5. Supplemental fine aggregate except fines from dust collectors
    5.6. Antistrip additives

If the Engineer requests in writing, sample the following materials in the presence of the Engineer and place in labeled containers weighing no more than 50 pounds each:

1. Coarse, fine, and supplemental fine aggregate from stockpiles, cold feed belts, or hot bins. Samples must include at least 120 pounds for each coarse aggregate, 80 pounds for each fine aggregate, and 10 pounds for each type of supplemental fines. The Department combines these aggregate samples to comply with the JMF target values submitted on Form CEM-3511.
2. RAP from stockpiles or RAP system. Samples must be at least 60 pounds.
3. Asphalt binder from the binder supplier. Samples must be in two 1-quart cylindrical shaped cans with open top and friction lids.
4. Asphalt rubber binder with the components blended in the proportions to be used. Samples must be in four 1-quart cylindrical shaped cans with open top and friction lids.

Notify the Engineer in writing at least 2 business days before sampling materials. For aggregate and RAP, split the samples into at least 4 parts. Submit 3 parts to the Engineer and use 1 part for your testing.

39-1.03D Job Mix Formula Review

The Engineer reviews each mix design and proposed JMF within 5 business days from the complete JMF submittal. The review consists of reviewing the mix design procedures and comparing the proposed JMF with the specifications.

The Engineer may verify aggregate qualities during this review period.

39-1.03E Job Mix Formula Verification

If you cannot submit a Department-verified JMF on Form CEM-3513 dated within 12 months before HMA production, the Engineer verifies the JMF.

Based on your testing and production experience, you may submit on Form CEM-3511 an adjusted JMF before the Engineer's verification testing. JMF adjustments may include a change in the:

1. Asphalt binder content target value up to ±0.6 percent from the optimum binder content value submitted on Form CEM-3512 except do not adjust the target value for asphalt rubber binder for RHMA-G below 7.0 percent
2. Aggregate gradation target values within the target value limits specified in the aggregate gradation tables

For HMA Type A, Type B, and RHMA-G, the Engineer verifies the JMF from samples taken from HMA produced by the plant to be used. Notify the Engineer in writing at least 2 business days before sampling materials.

In the Engineer's presence and from the same production run, take samples of:

1. Aggregate
2. Asphalt binder
3. RAP
4. HMA

Sample aggregate from cold feed belts or hot bins. Sample RAP from the RAP system. Sample HMA under California Test 125 except if you request in writing and the Engineer approves, you may sample from any of the following locations:

1. The plant
2. A truck
3. A windrow
4. The paver hopper
5. The mat behind the paver

You may sample from a different project including a non-Department project if you make arrangements for the Engineer to be present during sampling.

For aggregate, RAP, and HMA, split the samples into at least 4 parts and label their containers. Submit 3 split parts to the Engineer and use 1 part for your testing.

The Engineer verifies each proposed JMF within 20 days of receiving all verification samples and the JMF submittal has been accepted. If you request in writing, the Engineer verifies RHMA-G quality requirements within 3 business days of sampling. Verification is testing for compliance with the specifications for:

1. Aggregate quality
2. Aggregate gradation (JMF TV ± tolerance)
3. Asphalt binder content (JMF TV ± tolerance)
4. HMA quality specified in the table Hot Mix Asphalt Mix Design Requirements except:

    4.1. Air voids content (design value ± 2.0 percent)
    4.2. Voids filled with asphalt (report only if an adjustment for asphalt binder content target value is less than or equal to ± 0.3 percent from OBC)
    4.3. Dust proportion (report only if an adjustment for asphalt binder content target value is less than or equal to ± 0.3 percent from OBC)

The Engineer prepares 3 briquettes from a single split sample. To verify the JMF for stability and air voids content, the Engineer tests the 3 briquettes and reports the average of 3 tests. The Engineer prepares new briquettes if the range of stability for the 3 briquettes is more than 8 points.

The Engineer may use the briquettes used for stability testing to determine bulk specific gravity under CT 308. If the Engineer uses the same briquettes and the tests using bulk specific gravity fail, the Engineer prepares 3 new briquettes and determines a new bulk specific gravity.

If the Engineer verifies the JMF, the Engineer provides you a Form CEM-3513.

If the Engineer's tests on plant-produced samples do not verify the JMF, the Engineer notifies you in writing and you must submit a new JMF submittal or submit an adjusted JMF based on your testing. JMF adjustments may include a change in the:

1. Asphalt binder content target value up to ±0.6 percent from the optimum binder content value submitted on Form CEM-3512 except do not adjust the target value for asphalt rubber binder for RHMA-G below 7.0 percent
2. Aggregate gradation target values within the target value limits specified in the aggregate gradation tables

You may adjust the JMF only once due to a failed verification test. An adjusted JMF requires a new Form CEM-3511 and verification of a plant-produced sample.

A verified JMF is valid for 12 months.

For each HMA type and aggregate size specified, the Engineer verifies at the State's expense up to 2 proposed JMF including a JMF adjusted after verification failure. The Engineer deducts $3,000 from payments for each verification exceeding this limit. This deduction does not apply to verifications initiated by the Engineer or JMF renewal.

39-1.03F Job Mix Formula Renewal

You may request a JMF renewal by submitting the following:

1. Proposed JMF on Form CEM-3511
2. A previously verified JMF documented on Form CEM-3513 dated within 12 months
3. Mix design documentation on Form CEM-3512 used for the previously verified JMF

If the Engineer requests in writing, sample the following materials in the presence of the Engineer and place in labeled containers weighing no more than 50 pounds each:

1. Coarse, fine, and supplemental fine aggregate from stockpiles, cold feed belts, or hot bins. Samples must include at least 120 pounds for each coarse aggregate, 80 pounds for each fine aggregate, and 10 pounds for each type of supplemental fines. The Department combines these aggregate samples to comply with the JMF target values submitted on Form CEM-3511.
2. RAP from stockpiles or RAP system. Samples must be at least 60 pounds.
3. Asphalt binder from the binder supplier. Samples must be in two 1-quart cylindrical shaped cans with open top and friction lids.
4. Asphalt rubber binder with the components blended in the proportions to be used. Samples must be in four 1-quart cylindrical shaped cans with open top and friction lids.

Notify the Engineer in writing at least 2 business days before sampling materials. For aggregate and RAP, split samples into at least 4 parts. Submit 3 parts to the Engineer and use 1 part for your testing.

The Engineer may verify aggregate qualities during this review period.

Notify the Engineer in writing at least 2 business days before sampling materials. For aggregate, RAP, and HMA, split the samples into at least 4 parts. Submit 3 parts to the Engineer and use 1 part for your testing.

The Engineer verifies the JMF renewal submittal under Section 39-1.03E, "Job Mix Formula Verification," except:

1. The Engineer retains samples until you provide test results for your part on Form CEM-3514.
2. The Engineer tests samples of materials obtained from the HMA production unit after you submit test results that comply with the specifications for the quality characteristics under Section 39-1.03E, "Job Mix Formula Verification."
3. The Engineer verifies each proposed JMF renewal within 20 days of receiving verification samples.
4. You may not adjust the JMF due to a failed verification.
5. For each HMA type and aggregate gradation specified, the Engineer verifies at the State's expense 1 proposed JMF renewal within a 12-month period.

The most recent aggregate quality test results within the past 12 months may be used for verification of JMF renewal or the Engineer may perform aggregate quality tests for verification of JMF renewal.

If the Engineer verifies the JMF renewal, the Engineer provides you a Form CEM-3513.

39-1.03G Job Mix Formula Modification

For an accepted JMF, you may change binder source one time during production.

Submit your modified JMF request a minimum of 3 business days before production. Each modified JMF submittal must consist of:

1. Proposed modified JMF on Form CEM-3511.
2. Mix design records on Form CEM-3512 for the accepted JMF to be modified.
3. JMF verification on Form CEM-3513 for the accepted JMF to be modified.
4. Quality characteristics test results for the modified JMF as specified in section 39-1.03B. Perform tests at the mix design OBC as shown on Form CEM-3512.
5. If required, California Test 371 test results for the modified JMF.

With an accepted modified JMF submittal, the Engineer verifies each modified JMF within 5 business days of receiving all verification samples. If California Test 371 is required, the Engineer tests for California Test 371 within 10 days of receiving verification samples.

The Engineer verifies the modified JMF after the modified JMF HMA is placed on the project and verification samples are taken within the first 750 tons following sampling requirements in Section 39-1.03E, "Job Mix Formula Verification." The Engineer tests verification samples for compliance with:

1. Stability as shown in the table titled "Hot Mix Asphalt Mix Design Requirements"
2. Air void content at design value ±2.0 percent
3. Voids in mineral aggregate as shown in the table titled "Hot Mix Asphalt Mix Design Requirements"
4. Voids filled with asphalt if an adjustment for asphalt binder content TV is more than ±0.3 percent from the original OBC shown on Form CEM-3512.
5. Dust proportion if an adjustment for asphalt binder content TV is more than ±0.3 percent from OBC shown on Form CEM-3512.

If the modified JMF is verified, the Engineer revises your Form CEM-3513 to include the new binder source. Your revised Form CEM-3513 will have the same expiration date as the original Form CEM-3513 for the accepted JMF that is modified.

If a modified JMF is not verified, stop production and any HMA placed using the modified JMF is rejected.

The Engineer deducts $2,000 from payments for each modified JMF verification. The Engineer deducts an additional $2,000 from payments for each modified JMF verification that requires California Test 371.

39-1.03H Job Mix Formula Acceptance

You may start HMA production if:

1. The Engineer's review of the JMF shows compliance with the specifications.
2. The Department has verified the JMF within 12 months before HMA production.
3. The Engineer accepts the verified JMF.

39-1.04 CONTRACTOR QUALITY CONTROL

39-1.04A General

Establish, maintain, and change a quality control system to ensure materials and work comply with the specifications. Submit quality control test results to the Engineer within 3 business days of a request except when QC / QA is specified.

You must identify the HMA sampling location in your Quality Control Plan. During production, take samples under California Test 125. You may sample HMA from:

1. The plant
2. The truck
3. A windrow
4. The paver hopper
5. The mat behind the paver

39-1.04B Prepaving Conference

Meet with the Engineer at a prepaving conference at a mutually agreed time and place. Discuss methods of performing the production and paving work.

39-1.04C Asphalt Rubber Binder

Take asphalt rubber binder samples from the feed line connecting the asphalt rubber binder tank to the HMA plant. Sample and test asphalt rubber binder under Laboratory Procedure LP-11.

Test asphalt rubber binder for compliance with the viscosity specifications in Section 39-1.02, "Materials." During asphalt rubber binder production and HMA production using asphalt rubber binder, measure viscosity every hour with not less than 1 reading for each asphalt rubber binder batch. Log measurements with corresponding time and asphalt rubber binder temperature. Submit the log daily in writing.

Submit a Certificate of Compliance under Section 6-1.07, "Certificates of Compliance." With the Certificate of Compliance, submit test results in writing for CRM and asphalt modifier with each truckload delivered to the HMA plant. A Certificate of Compliance for asphalt

modifier must not represent more than 5,000 pounds. Use an AASHTO-certified laboratory for testing.

Sample and test gradation and wire and fabric content of CRM once per 10,000 pounds of scrap tire CRM and once per 3,400 pounds of high natural CRM. Sample and test scrap tire CRM and high natural CRM separately.

Submit certified weight slips in writing for the CRM and asphalt modifier furnished.

39-1.04D Aggregate

Determine the aggregate moisture content and RAP moisture content in continuous mixing plants at least twice a day during production and adjust the plant controller. Determine the RAP moisture content in batch mixing plants at least twice a day during production and adjust the plant controller.

39-1.04E Reclaimed Asphalt Pavement

Perform RAP quality control testing each day.

Sample RAP once daily and determine the RAP aggregate gradation under Laboratory Procedure LP-9 and submit the results to the Engineer in writing with the combined aggregate gradation.

39-1.04F Density Cores

To determine density for Standard and QC / QA projects, take 4-inch or 6-inch diameter density cores at least once every 5 business days. Take 1 density core for every 250 tons of HMA from random locations the Engineer designates. Take density cores in the Engineer's presence and backfill and compact holes with material authorized by the Engineer. Before submitting a density core to the Engineer, mark it with the density core's location and place it in a protective container.

If a density core is damaged, replace it with a density core taken within 1 foot longitudinally from the original density core. Relocate any density core located within 1 foot of a rumble strip to 1 foot transversely away from the rumble strip.

39-1.04G Briquettes

Prepare 3 briquettes for each stability and air voids content determination. Report the average of 3 tests. Prepare new briquettes and test if the range of stability for the 3 briquettes is more than 12 points.

You may use the briquettes used for stability testing to determine bulk specific gravity under CT 308. If you use these briquettes and tests using bulk specific gravity fail, you may prepare 3 new briquettes and determine a new bulk specific gravity.

39-1.05 ENGINEER'S ACCEPTANCE

The Engineer's acceptance of HMA is specified in the sections for each HMA construction process.

The Engineer samples materials for testing under California Test 125 and the applicable test method except samples may be taken from:

1. The plant from:

    1.1. A truck

1.2. An automatic sampling device

2. The mat behind the paver

Sampling must be independent of Contractor quality control, statistically-based, and random. If you request, the Engineer splits samples and provides you with a part.

The Engineer accepts HMA based on:

1. Accepted JMF
2. Accepted QCP for Standard and QC / QA
3. Compliance with the HMA Acceptance tables
4. Acceptance of a lot for QC / QA
5. Visual inspection

The Engineer prepares 3 briquettes for each stability and air voids content determination. The Engineer reports the average of 3 tests. The Engineer prepares new briquettes and test if the range of stability for the 3 briquettes is more than 8 points.

The Engineer may use the briquettes used for stability testing to determine bulk specific gravity under CT 308. If the Engineer uses the same briquettes and the tests using bulk specific gravity fail, the Engineer prepares 3 new briquettes and determines a new bulk specific gravity.

39-1.06 DISPUTE RESOLUTION

You and the Engineer must work together to avoid potential conflicts and to resolve disputes regarding test result discrepancies. Notify the Engineer in writing within 5 business days of receiving a test result if you dispute the test result.

If you or the Engineer dispute each other's test results, submit written quality control test results and copies of paperwork including worksheets used to determine the disputed test results to the Engineer. An Independent Third Party (ITP) performs referee testing. Before the ITP participates in a dispute resolution, the ITP must be accredited under the Department's Independent Assurance Program. The ITP must be independent of the project. By mutual agreement, the ITP is chosen from:

1. A Department laboratory
2. A Department laboratory in a district or region not in the district or region the project is located
3. The Transportation Laboratory
4. A laboratory not currently employed by you or your HMA producer

If split quality control or acceptance samples are not available, the ITP uses any available material representing the disputed HMA for evaluation.

39-1.07 PRODUCTION START-UP EVALUATION

The Engineer evaluates HMA production and placement at production start-up.

Within the first 750 tons produced on the first day of HMA production, in the Engineer's presence and from the same production run, take samples of:

1. Aggregate
2. Asphalt binder
3. RAP
4. HMA

Sample aggregate from cold feed belts or hot bins. Take RAP samples from the RAP system. Sample HMA under California Test 125 except if you request in writing and the Engineer approves, you may sample HMA from:

1. The plant
2. The truck
3. A windrow
4. The paver hopper
5. The mat behind the paver

For aggregate, RAP, and HMA, split the samples into at least 4 parts and label their containers. Submit 3 split parts to the Engineer and keep 1 part.

For Standard and QC / QA projects, you and the Engineer must test the split samples and report test results in writing within 3 business days of sampling. If you proceed before receipt of the test results, the Engineer may consider the HMA placed to be represented by these test results.

For Standard and QC / QA projects, take 4-inch or 6-inch diameter density cores within the first 750 tons on the first day of HMA production. For each density core, the Engineer reports the bulk specific gravity determined under California Test 308, Method A in addition to the percent of maximum theoretical density. You may test for in-place density at the density core locations and include them in your production tests for percent of maximum theoretical density.

39-1.08 PRODUCTION

39-1.08A General

Produce HMA in a batch mixing plant or a continuous mixing plant. Proportion aggregate by hot or cold feed control.

HMA plants must be Department-qualified. Before production, the HMA plant must have a current qualification under the Department's Materials Plant Quality Program.

During production, you may adjust:

1. Hot or cold feed proportion controls for virgin aggregate and RAP
2. The set point for asphalt binder content

39-1.08B Mixing

Mix HMA ingredients into a homogeneous mixture of coated aggregates.

Asphalt binder must be between 275 °F and 375 °F when mixed with aggregate.

Asphalt rubber binder must be between 375 °F and 425 °F when mixed with aggregate.

When mixed with asphalt binder, aggregate must not be more than 325 °F except aggregate for OGFC with unmodified asphalt binder must be not more than 275 °F. Aggregate temperature specifications do not apply when you use RAP.

HMA with or without RAP must not be more than 325 °F.

39-1.08C Asphalt Rubber Binder

Deliver scrap tire CRM and high natural CRM in separate bags.

Either proportion and mix asphalt binder, asphalt modifier, and CRM simultaneously or premix the asphalt binder and asphalt modifier before adding CRM. If you premix asphalt binder and asphalt modifier, asphalt binder must be from 375 to 425 degrees F when you add the asphalt modifier. Mix them for at least 20 minutes. When you add CRM, the asphalt binder and asphalt modifier must be between 375 °F and 425 °F.

Do not use asphalt rubber binder during the first 45 minutes of the reaction period. During this period, the asphalt rubber binder mixture must be between 375 °F and the lower of 425 °F or 25 °F below the asphalt binder's flash point indicated in the MSDS.

If any asphalt rubber binder is not used within 4 hours after the reaction period, discontinue heating. If the asphalt rubber binder drops below 375 °F, reheat before use. If you add more scrap tire CRM to the reheated asphalt rubber binder, the binder must undergo a 45-minute reaction period. The added scrap tire CRM must not exceed 10 percent of the total asphalt rubber binder weight. Reheated and reacted asphalt rubber binder must comply with the viscosity specifications for asphalt rubber binder in Section 39-1.02, "Materials." Do not reheat asphalt rubber binder more than twice.

39-1.09 SUBGRADE, TACK COAT, AND GEOSYNTHETIC PAVEMENT INTERLAYER

39-1.09A General

Prepare subgrade or apply tack coat to surfaces receiving HMA. If specified, place geosynthetic pavement interlayer over a coat of asphalt binder.

39-1.09B Subgrade

Subgrade to receive HMA must comply with the compaction and elevation tolerance specifications in the sections for the material involved. Subgrade must be free of loose and extraneous material. If HMA is paved on existing base or pavement, remove loose paving particles, dirt, and other extraneous material by any means including flushing and sweeping.

39-1.09C Tack Coat

Apply tack coat:

1. To existing pavement including planed surfaces
2. Between HMA layers
3. To vertical surfaces of:

    3.1. Curbs
    3.2. Gutters
    3.3. Construction joints

Before placing HMA, apply tack coat in 1 application at the minimum residual rate specified for the condition of the underlying surface:

Tack Coat Application Rates for HMA Type A, Type B, and RHMA-G

HMA over:	Minimum Residual Rates (gallons per square yard)		
	CSS1/CSS1h, SS1/SS1h and QS1h/CQS1h Asphaltic Emulsion	CRS1/CRS2, RS1/RS2 and QS1/CQS1 Asphaltic Emulsion	Asphalt Binder and PMRS2/PMCRS2 and PMRS2h/PMCRS2h Asphaltic Emulsion
New HMA (between layers)	0.02	0.03	0.02
PCC and existing HMA (AC) surfaces	0.03	0.04	0.03
Planed PCC and HMA (AC) surfaces	0.05	0.06	0.04

Tack Coat Application Rates for OGFC

OGFC over:	Minimum Residual Rates (gallons per square yard)		
	CSS1/CSS1h, SS1/SS1h and QS1h/CQS1h Asphaltic Emulsion	CRS1/CRS2, RS1/RS2 and QS1/CQS1 Asphaltic Emulsion	Asphalt Binder and PMRS2/PMCRS2 and PMRS2h/PMCRS2h Asphaltic Emulsion
New HMA	0.03	0.04	0.03
PCC and existing HMA (AC) surfaces	0.05	0.06	0.04
Planed PCC and HMA (AC) surfaces	0.06	0.07	0.05

If you dilute asphaltic emulsion, mix until homogeneous before application.

Apply to vertical surfaces with a residual tack coat rate that will thoroughly coat the vertical face without running off.

If you request in writing and the Engineer authorizes, you may:

1. Change tack coat rates
2. Omit tack coat between layers of new HMA during the same work shift if:

    2.1. No dust, dirt, or extraneous material is present
    2.2. The surface is at least 140 °F

Immediately in advance of placing HMA, apply additional tack coat to damaged areas or where loose or extraneous material is removed.

Close areas receiving tack coat to traffic. Do not track tack coat onto pavement surfaces beyond the job site.

Asphalt binder tack coat must be between 285 °F and 350 °F when applied.

39-1.09D Geosynthetic Pavement Interlayer

Place geosynthetic pavement interlayer in compliance with the manufacturer's recommendations.

Before placing the geosynthetic pavement interlayer and asphalt binder:

1. Repair cracks 1/4 inch and wider, spalls, and holes in the pavement. The State pays for this repair work under Section 4-1.03D, "Extra Work."
2. Clean the pavement of loose and extraneous material.

Immediately before placing the interlayer, apply 0.25 gallon ± 0.03 gallon of asphalt binder per square yard of interlayer or until the fabric is saturated. Apply asphalt binder the width of the geosynthetic pavement interlayer plus 3 inches on each side. At interlayer overlaps, apply asphalt binder on the lower interlayer the same overlap distance as the upper interlayer.

Asphalt binder must be from 285 °F to 350 °F and below the minimum melting point of the geosynthetic pavement interlayer when applied.

Align and place the interlayer with no overlapping wrinkles, except a wrinkle that overlaps may remain if it is less than 1/2 inch thick. If the overlapping wrinkle is more than 1/2 inch thick, cut the wrinkle out and overlap the interlayer no more than 2 inches.

The minimum HMA thickness over the interlayer must be 0.12 foot thick including conform tapers. Do not place the interlayer on a wet or frozen surface.

Overlap the interlayer borders between 2 inches and 4 inches. In the direction of paving, overlap the following roll with the preceding roll at any break.

You may use rolling equipment to correct distortions or wrinkles in the interlayer.

If asphalt binder tracked onto the interlayer or brought to the surface by construction equipment causes interlayer displacement, cover it with a small quantity of HMA.

Before placing HMA on the interlayer, do not expose the interlayer to:

1. Traffic except for crossings under traffic control and only after you place a small HMA quantity
2. Sharp turns from construction equipment
3. Damaging elements

Pave HMA on the interlayer during the same work shift.

39-1.10 SPREADING AND COMPACTING EQUIPMENT

Paving equipment for spreading must be:

1. Self-propelled
2. Mechanical
3. Equipped with a screed or strike-off assembly that can distribute HMA the full width of a traffic lane
4. Equipped with a full-width compacting device
5. Equipped with automatic screed controls and sensing devices that control the thickness, longitudinal grade, and transverse screed slope

Install and maintain grade and slope references.

The screed must produce a uniform HMA surface texture without tearing, shoving, or gouging.

The paver must not leave marks such as ridges and indentations unless you can eliminate them by rolling.

Rollers must be equipped with a system that prevents HMA from sticking to the wheels. You may use a parting agent that does not damage the HMA or impede the bonding of layers.

In areas inaccessible to spreading and compacting equipment:

1. Spread the HMA by any means to obtain the specified lines, grades and cross sections.
2. Use a pneumatic tamper, plate compactor, or equivalent to achieve thorough compaction.

39-1.11 TRANSPORTING, SPREADING, AND COMPACTING

Do not pave HMA on a wet pavement or frozen surface.

You may deposit HMA in a windrow and load it in the paver if:

1. Paver is equipped with a hopper that automatically feeds the screed
2. Loading equipment can pick up the windrowed material and deposit it in the paver hopper without damaging base material
3. Activities for deposit, pick-up, loading, and paving are continuous
4. HMA temperature in the windrow does not fall below 260 °F

You may pave HMA in 1 or more layers on areas less than 5 feet wide and outside the traveled way including shoulders. You may use mechanical equipment other than a paver for these areas. The equipment must produce a uniform smoothness and texture.

HMA handled, spread, or windrowed must not stain the finished surface of any improvement including pavement.

Do not use petroleum products such as kerosene or diesel fuel to release HMA from trucks, spreaders, or compactors.

HMA must be free of:

1. Segregation
2. Coarse or fine aggregate pockets
3. Hardened lumps

Longitudinal joints in the top layer must match specified lane edges. Alternate longitudinal joint offsets in lower layers at least 0.5 foot from each side of the specified lane edges. You may request in writing other longitudinal joint placement patterns.

Until the adjoining through lane's top layer has been paved, do not pave the top layer of:

1. Shoulders
2. Tapers
3. Transitions
4. Road connections
5. Driveways
6. Curve widenings
7. Chain control lanes
8. Turnouts
9. Turn pockets

If the number of lanes change, pave each through lane's top layer before paving a tapering lane's top layer. Simultaneous to paving a through lane's top layer, you may pave an adjoining area's top layer including shoulders. Do not operate spreading equipment on any area's top layer until completing final compaction.

If HMA (leveling) is specified, fill and level irregularities and ruts with HMA before spreading HMA over base, existing surfaces, or bridge decks. You may use mechanical equipment other than a paver for these areas. The equipment must produce a uniform smoothness and texture. HMA used to change an existing surface's cross slope or profile is not HMA (leveling).

If placing HMA against the edge of existing pavement, sawcut or grind the pavement straight and vertical along the joint and remove extraneous material without damaging the surface remaining in place. If placing HMA against the edge of a longitudinal or transverse construction joint and the joint is damaged or not placed to a neat line, sawcut or grind the pavement straight and vertical along the joint and remove extraneous material without damaging the surface remaining in place. Repair or remove and replace damaged pavement at your expense.

Rolling must leave the completed surface compacted and smooth without tearing, cracking, or shoving. Complete finish rolling activities before the pavement surface temperature is:

1. Below 150 °F for HMA with unmodified binder
2. Below 140 °F for HMA with modified binder
3. Below 200 °F for RHMA-G

If a vibratory roller is used as a finish roller, turn the vibrator off.

Do not use a pneumatic tired roller to compact RHMA-G.

For Standard and QC/QA, if a 3/4-inch aggregate grading is specified, you may use a 1/2-inch aggregate grading if the specified total paved thickness is at least 0.15 foot and less than 0.20 foot thick.

Spread and compact HMA under Section 39-3.03, "Spreading and Compacting Equipment," and Section 39-3.04, "Transporting, Spreading, and Compacting," for any of the following:

1. Specified paved thickness is less than 0.15 foot.
2. Specified paved thickness is less than 0.20 foot and a 3/4-inch aggregate grading is specified and used.
3. You spread and compact at:

    3.1. Asphalt concrete surfacing replacement areas
    3.2. Leveling courses
    3.3. Areas the Engineer determines conventional compaction and compaction measurement methods are impeded

Do not open new HMA pavement to public traffic until its mid-depth temperature is below 160 °F.

If you request in writing and the Engineer authorizes, you may cool HMA Type A and Type B with water when rolling activities are complete. Apply water under Section 17, "Watering."

Spread sand at a rate between 1 pound and 2 pounds per square yard on new RHMA-G, RHMA-O, and RHMA-O-HB pavement when finish rolling is complete. Sand must be free of clay or organic matter. Sand must comply with Section 90-3.03, "Fine Aggregate Grading." Keep traffic off the pavement until spreading sand is complete.

39-1.12 SMOOTHNESS

39-1.12A General

Determine HMA smoothness with a profilograph and a straightedge.

Smoothness specifications do not apply to OGFC placed on existing pavement not constructed under the same project.

If portland cement concrete is placed on HMA:

1. Cold plane the HMA finished surface to within specified tolerances if it is higher than the grade specified by the Engineer.
2. Remove and replace HMA if the finished surface is lower than 0.05 foot below the grade specified by the Engineer.

39-1.12B Straightedge

The HMA pavement top layer must not vary from the lower edge of a 12-foot long straightedge:

1. More than 0.01 foot when the straight edge is laid parallel with the centerline
2. More than 0.02 foot when the straightedge is laid perpendicular to the centerline and extends from edge to edge of a traffic lane
3. More than 0.02 foot when the straightedge is laid within 24 feet of a pavement conform

39-1.12C Profilograph

Under California Test 526, determine the zero (null) blanking band Profile Index (PI_0) and must-grinds on the top layer of HMA Type A, Type B, and RHMA-G pavement. Take 2 profiles within each traffic lane, 3 feet from and parallel with the edge of each lane.

A must-grind is a deviation of 0.3 inch or more in a length of 25 feet. You must correct must-grinds.

For OGFC, only determine must-grinds when placed over HMA constructed under the same project. The top layer of the underlying HMA must comply with the smoothness specifications before placing OGFC.

Profile pavement in the Engineer's presence. Choose the time of profiling.

On tangents and horizontal curves with a centerline radius of curvature 2,000 feet or more, the PI_0 must be at most 2.5 inches per 0.1-mile section.

On horizontal curves with a centerline radius of curvature between 1,000 feet and 2,000 feet including pavement within the superelevation transitions, the PI_0 must be at most 5 inches per 0.1-mile section.

Before the Engineer accepts HMA pavement for smoothness, submit written final profilograms.

Submit 1 electronic copy of profile information in Microsoft Excel and 1 electronic copy of longitudinal pavement profiles in ".erd" format or other ProVAL compatible format to the Engineer and to:

Smoothness@dot.ca.gov

The following HMA pavement areas do not require a PI_0. You must measure these areas with a 12-foot straightedge and determine must-grinds with a profilograph:

1. New HMA with a total thickness less than 0.25 foot
2. HMA sections of city or county streets and roads, turn lanes and collector lanes that are less than 1,500 feet in length

The following HMA pavement areas do not require a PI_0. You must measure these areas with a 12-foot straightedge:

1. Horizontal curves with a centerline radius of curvature less than 1,000 feet including pavement within the superelevation transitions of those curves
2. Within 12 feet of a transverse joint separating the pavement from:

    2.1. Existing pavement not constructed under the same project
    2.2. A bridge deck or approach slab

3. Exit ramp termini, truck weigh stations, and weigh-in-motion areas
4. If steep grades and superelevation rates greater than 6 percent are present on:

    4.1. Ramps
    4.2. Connectors

5. Turn lanes
6. Areas within 15 feet of manholes or drainage transitions
7. Acceleration and deceleration lanes for at-grade intersections
8. Shoulders and miscellaneous areas
9. HMA pavement within 3 feet from and parallel to the construction joints formed between curbs, gutters, or existing pavement

39-1.12D Smoothness Correction

If the top layer of HMA Type A, Type B, or RHMA-G pavement does not comply with the smoothness specifications, grind the pavement to within tolerances, remove and replace it, or place a layer of HMA. The Engineer must authorize your choice of correction before the work begins.

Remove and replace the areas of OGFC not in compliance with the must-grind and straightedge specifications, except you may grind OGFC for correcting smoothness:

1. At a transverse joint separating the pavement from pavement not constructed under the same project
2. Within 12 feet of a transverse joint separating the pavement from a bridge deck or approach slab

Corrected HMA pavement areas must be uniform rectangles with edges:

1. Parallel to the nearest HMA pavement edge or lane line
2. Perpendicular to the pavement centerline

Measure the corrected HMA pavement surface with a profilograph and a 12-foot straightedge and correct the pavement to within specified tolerances. If a must-grind area or straightedged pavement cannot be corrected to within specified tolerances, remove and replace the pavement.

On ground areas not overlaid with OGFC, apply fog seal coat under Section 37-1, "Seal Coats."

39-1.13 MISCELLANEOUS AREAS AND DIKES

Miscellaneous areas are outside the traveled way and include:

1. Median areas not including inside shoulders
2. Island areas
3. Sidewalks
4. Gutters
5. Gutter flares
6. Ditches
7. Overside drains
8. Aprons at the ends of drainage structures

Spread miscellaneous areas in 1 layer and compact to the specified lines and grades.
For miscellaneous areas and dikes:

1. Do not submit a JMF.
2. Choose the 3/8-inch or 1/2-inch HMA Type A and Type B aggregate gradations.
3. Minimum asphalt binder content must be 6.8 percent for 3/8-inch aggregate and 6.0 percent for 1/2-inch aggregate. If you request in writing and the Engineer authorizes, you may reduce the minimum asphalt binder content.
4. Choose asphalt binder Grade PG 70-10 or the same grade specified for HMA.

39-2 STANDARD

39-2.01 DESCRIPTION

If HMA is specified as Standard, construct it under Section 39-1, "General," this Section 39-2, "Standard," and Section 39-5, "Measurement and Payment."

39-2.02 CONTRACTOR QUALITY CONTROL

39-2.02A Quality Control Plan

Establish, implement, and maintain a Quality Control Plan (QCP) for HMA. The QCP must describe the organization and procedures you will use to:

1. Control the quality characteristics
2. Determine when corrective actions are needed (action limits)
3. Implement corrective actions

When you submit the proposed JMF, submit the written QCP. You and the Engineer must discuss the QCP during the prepaving conference.
The QCP must address the elements affecting HMA quality including:

1. Aggregate
2. Asphalt binder
3. Additives
4. Production

5. Paving

The Engineer reviews each QCP within 5 business days from the submittal. Hold HMA production until the Engineer accepts the QCP in writing. The Engineer's QCP acceptance does not mean your compliance with the QCP will result in acceptable HMA. Section 39-1.05, "Engineer's Acceptance," specifies HMA acceptance.

39-2.02B Quality Control Testing

Perform sampling and testing at the specified frequency for the following quality characteristics:

Minimum Quality Control – Standard

Quality Characteristic	Test Method	Minimum Sampling and Testing Frequency	HMA Type			
			A	B	RHMA-G	OGFC
Aggregate gradation[a]	CT 202	1 per 750 tons and any remaining part at the end of the project	JMF ± Tolerance [b]	JMF ± Tolerance [b]	JMF ± Tolerance [b]	JMF ± Tolerance [b]
Sand equivalent (min.) [c]	CT 217		47	42	47	--
Asphalt binder content (%)	CT 379 or 382		JMF ± 0.45	JMF ± 0.45	JMF ± 0.50	JMF ± 0.50
HMA moisture content (%, max.)	CT 226 or CT 370	1 per 2,500 tons but not less than 1 per paving day	1.0	1.0	1.0	1.0
Field compaction, (%, max. theoretical density) [d,e]	Quality control plan	2 per business day (min.)	91 - 97	91 - 97	91 - 97	--
Stabilometer value (min.) [c, f] No. 4 and 3/8" gradings 1/2" and 3/4" gradings	CT 366	One per 4,000 tons or 2 per 5 business days, whichever is more	30 37	30 35	-- 23	-- --
Air voids content (%) [c, g]	CT 367		4 ± 2	4 ± 2	Specification ± 2	--
Aggregate moisture content at continuous mixing plants and RAP moisture content at continuous mixing plants and batch mixing plants [h]	CT 226 or CT 370	2 per day during production	--	--	--	--

Percent of crushed particles coarse aggregate (%, min.) One fractured face Two fractured faces Fine aggregate (%, min) (Passing No. 4 sieve and retained on No. 8 sieve.) One fractured face	CT 205	As necessary and designated in the QCP. At least once per project	90 75 70	25 -- 20	-- 90 70	90 75 90
Los Angeles Rattler (%, max.) Loss at 100 rev. Loss at 500 rev.	CT 211		12 45	-- 50	12 40	12 40
Flat and elongated particles (%, max. by weight @ 5:1)	CT 235		Report only	Report only	Report only	Report only
Fine aggregate angularity (%, min.)[i]	CT 234		45	45	45	--
Voids filled with asphalt (%)[j] No. 4 grading 3/8" grading 1/2" grading 3/4" grading	LP-3		76.0 – 80.0 73.0 – 76.0 65.0 – 75.0 65.0 – 75.0	76.0 – 80.0 73.0 – 76.0 65.0 – 75.0 65.0 – 75.0	Report only	--
Voids in mineral aggregate (% min.)[j] No. 4 grading 3/8" grading 1/2" grading 3/4" grading	LP-2		17.0 15.0 14.0 13.0	17.0 15.0 14.0 13.0	-- -- 18.0 – 23.0[k] 18.0 – 23.0[k]	--

Dust proportion[j] No. 4 and 3/8" gradings 1/2" and 3/4" gradings	LP-4		0.9 – 2.0 0.6 – 1.3	0.9 – 2.0 0.6 – 1.3	Report only	--
Smoothness	Section 39-1.12	--	12-foot straightedge, must-grind, and PI_0	12-foot straightedge, must-grind, and PI_0	12-foot straightedge, must-grind, and PI_0	12-foot straightedge and must-grind
Asphalt rubber binder viscosity @ 375 °F, centipoises	Section 39-1.02D	Section 39-1.04C	--	--	1,500 – 4,000	1,500 – 4,000
Asphalt modifier	Section 39-1.02D	Section 39-1.04C	--	--	Section 39-1.02D	Section 39-1.02D
Crumb rubber modifier	Section 39-1.02D	Section 39-1.04C	--	--	Section 39-1.02D	Section 39-1.02D

Notes:

[a] Determine combined aggregate gradation containing RAP under Laboratory Procedure LP-9.

[b] The tolerances must comply with the allowable tolerances in Section 39-1.02E, "Aggregate."

[c] Report the average of 3 tests from a single split sample.

[d] Determine field compaction for any of the following conditions:

1. 1/2-inch, 3/8-inch, No. 4 aggregate grading is used and the specified total paved thickness is at least 0.15 foot.
2. 3/4-inch aggregate grading is used and the specified total paved thickness is at least 0.20 foot.

[e] To determine field compaction use:

1. In-place density measurements using the method specified in your QC.
2. California Test 309 to determine maximum theoretical density at the frequency specified in California Test 375, Part 5C.

[f] Modify California Test 304, Part 2.B.2.c: "After compaction in the mechanical compactor, cool to 140 °F ± 5 °F by allowing the briquettes to cool at room temperature for 0.5 hour, then place the briquettes in the oven at 140 °F for a minimum of 2 hours and not more than 3 hours."

[g] Determine the bulk specific gravity of each lab-compacted briquette under California Test 308, Method A, and theoretical maximum specific gravity under California Test 309.

[h] For adjusting the plant controller at the HMA plant.

[i] The Engineer waives this specification if HMA contains 10 percent or less of nonmanufactured sand by weight of total aggregate. Manufactured sand is fine aggregate produced by crushing rock or gravel.

[j] Report only if the adjustment for asphalt binder content target value is less than or equal to ± 0.3 percent from OBC.

[k] Voids in mineral aggregate for RHMA-G must be within this range.

For any single quality characteristic except smoothness, if 2 consecutive quality control test results do not comply with the action limits or specifications:

1. Stop production.
2. Notify the Engineer in writing.
3. Take corrective action.
4. Demonstrate compliance with the specifications before resuming production and placement on the State highway.

39-2.03 ENGINEER'S ACCEPTANCE

39-2.03A Testing

The Engineer samples for acceptance testing and tests for:

HMA Acceptance - Standard

Quality Characteristic	Test Method	HMA Type			
		A	B	RHMA-G	OGFC
Aggregate gradation [a]	CT 202	JMF ± Tolerance [c]	JMF ± Tolerance [c]	JMF ± Tolerance [c]	JMF ± Tolerance [c]
Sieve: 3/4", 1/2", 3/8"					
1/2": X [b]					
3/8": X					
No. 4: X					
No. 8: X X X					
No. 200: X X X					
Sand equivalent (min.) [d]	CT 217	47	42	47	--
Asphalt binder content (%)	CT 379 or 382	JMF ± 0.45	JMF ± 0.45	JMF ± 0.50	JMF ± 0.50
HMA moisture content (%, max.)	CT 226 or CT 370	1.0	1.0	1.0	1.0
Field compaction (% max. theoretical density) [e,f]	CT 375	91 – 97	91 – 97	91 – 97	--
Stabilometer value (min.) [d,g]	CT 366				
No. 4 and 3/8" gradings		30	30	--	--
1/2" and 3/4" gradings		37	35	23	--
Air voids content (%) [d, h]	CT 367	4 ± 2	4 ± 2	Specification ± 2	--
Percent of crushed particles	CT 205				
Coarse aggregate (%, min.)					
One fractured face		90	25	--	90
Two fractured faces		75	--	90	75
Fine aggregate (%, min) (Passing No. 4 sieve and retained on No. 8 sieve.) One fractured face		70	20	70	90
Los Angeles Rattler (%, max.)	CT 211				
Loss at 100 rev.		12	--	12	12
Loss at 500 rev.		45	50	40	40
Fine aggregate angularity (%, min.) [i]	CT 234	45	45	45	--
Flat and elongated particles (%, max. by	CT 235	Report only	Report only	Report only	Report only

weight @ 5:1)					
Voids filled with asphalt (%)[j] No. 4 grading 3/8" grading 1/2" grading 3/4" grading	LP-3	 76.0 – 80.0 73.0 – 76.0 65.0 – 75.0 65.0 – 75.0	 76.0 – 80.0 73.0 – 76.0 65.0 – 75.0 65.0 – 75.0	Report only	--
Voids in mineral aggregate (% min.)[j] No. 4 grading 3/8" grading 1/2" grading 3/4" grading	LP-2	 17.0 15.0 14.0 13.0	 17.0 15.0 14.0 13.0	 -- -- 18.0 – 23.0[k] 18.0 – 23.0[k]	--
Dust proportion[J] No. 4 and 3/8" gradings 1/2" and 3/4" gradings	LP-4	 0.9 – 2.0 0.6 – 1.3	 0.9 – 2.0 0.6 – 1.3	Report only	--
Smoothness	Section 39-1.12	12-foot straightedge, must-grind, and PI_0	12-foot straightedge, must-grind, and PI_0	12-foot straightedge, must-grind, and PI_0	12-foot straightedge and must-grind
Asphalt binder	Various	Section 92	Section 92	Section 92	Section 92
Asphalt rubber binder	Various	--	--	Section 92-1.02(C) and Section 39-1.02D	Section 92-1.02(C) and Section 39-1.02D
Asphalt modifier	Various	--	--	Section 39-1.02D	Section 39-1.02D
Crumb rubber modifier	Various	--	--	Section 39-1.02D	Section 39-1.02D

[a] The Engineer determines combined aggregate gradations containing RAP under Laboratory Procedure LP-9.

[b] "X" denotes the sieves the Engineer considers for the specified aggregate gradation.

[c] The tolerances must comply with the allowable tolerances in Section 39-1.02E, "Aggregate."

[d] The Engineer reports the average of 3 tests from a single split sample.

[e] The Engineer determines field compaction for any of the following conditions:

1. 1/2-inch, 3/8-inch, or No.4 aggregate grading is used and the specified total paved thickness is at least 0.15 foot.
2. 3/4-inch aggregate grading is used and the specified total paved thickness is at least 0.20 foot.

[f] To determined field compaction, the Engineer uses:

1. California Test 308, Method A, to determine in-place density of each density core.
2. California Test 309 to determine maximum theoretical density at the frequency specified in California Test 375, Part 5C.

[g] Modify California Test 304, Part 2.B.2.c: "After compaction in the mechanical compactor, cool to 140 °F ±5 °F by allowing the briquettes to cool at room temperature for 0.5 hour, then place the briquettes in the oven at 140 °F for a minimum of 2 hours and not more than 3 hours."
[h] The Engineer determines the bulk specific gravity of each lab-compacted briquette under California Test 308, Method A, and theoretical maximum specific gravity under California Test 309.
[i] The Engineer waives this specification if HMA contains 10 percent or less of nonmanufactured sand by weight of total aggregate. Manufactured sand is fine aggregate produced by crushing rock or gravel.
[j] Report only if the adjustment for asphalt binder content target value is less than or equal to ± 0.3 percent from OBC.
[k] Voids in mineral aggregate for RHMA-G must be within this range.

No single test result may represent more than the smaller of 750 tons or 1 day's production.

For any single quality characteristic except smoothness, if 2 consecutive acceptance test results do not comply with the specifications:

1. Stop production.
2. Take corrective action.
3. In the Engineer's presence, take samples and split each sample into 4 parts. Test 1 part for compliance with the specifications and submit 3 parts to the Engineer. The Engineer tests 1 part for compliance with the specifications and reserves and stores 2 parts.
4. Demonstrate compliance with the specifications before resuming production and placement on the State highway.

The Engineer tests the density core you take from each 250 tons of HMA production. The Engineer determines the percent of maximum theoretical density for each density core by determining the density core's density and dividing by the maximum theoretical density.

The Engineer determines the percent of maximum theoretical density from density cores taken from the final layer measured the full depth of the total paved HMA thickness if any of the following applies:

1. 1/2-inch, 3/8-inch, or No. 4 aggregate grading is used and the specified total paved thickness is at least 0.15 foot and any layer is less than 0.15 foot.
2. 3/4-inch aggregate grading is used and the specified total paved thickness is at least 0.20 foot and any layer is less than 0.20 foot.

For percent of maximum theoretical density, the Engineer determines a deduction for each test result outside the specifications in compliance with:

Reduced Payment Factors for Percent of Maximum Theoretical Density

HMA Type A and B and RHMA-G Percent of Maximum Theoretical Density	Reduced Payment Factor	HMA Type A and B and RHMA-G Percent of Maximum Theoretical Density	Reduced Payment Factor
91.0	0.0000	97.0	0.0000
90.9	0.0125	97.1	0.0125
90.8	0.0250	97.2	0.0250
90.7	0.0375	97.3	0.0375
90.6	0.0500	97.4	0.0500
90.5	0.0625	97.5	0.0625
90.4	0.0750	97.6	0.0750
90.3	0.0875	97.7	0.0875
90.2	0.1000	97.8	0.1000
90.1	0.1125	97.9	0.1125
90.0	0.1250	98.0	0.1250
89.9	0.1375	98.1	0.1375
89.8	0.1500	98.2	0.1500
89.7	0.1625	98.3	0.1625
89.6	0.1750	98.4	0.1750
89.5	0.1875	98.5	0.1875
89.4	0.2000	98.6	0.2000
89.3	0.2125	98.7	0.2125
89.2	0.2250	98.8	0.2250
89.1	0.2375	98.9	0.2375
89.0	0.2500	99.0	0.2500
< 89.0	Remove and Replace	> 99.0	Remove and Replace

39-2.04 TRANSPORTING, SPREADING, AND COMPACTING

Determine the number of rollers needed to obtain the specified density and surface finish.

39-3 METHOD

39-3.01 DESCRIPTION

If HMA is specified as Method, construct it under Section 39-1, "General," this Section 39-3, "Method," and Section 39-5, "Measurement and Payment."

39-3.02 ENGINEER'S ACCEPTANCE

39-3.02A Testing

The Engineer samples for acceptance testing and tests for:

HMA Acceptance - Method

Quality Characteristic	Test Method	HMA Type			
		A	B	RHMA-G	OGFC
Aggregate gradation [a]	CT 202	JMF ± Tolerance [b]	JMF ± Tolerance [b]	JMF ± Tolerance [b]	JMF ± Tolerance [b]
Sand equivalent (min.) [c]	CT 217	47	42	47	--
Asphalt binder content (%)	CT 379 or 382	JMF ± 0.45	JMF ± 0.45	JMF ± 0.50	JMF ± 0.50
HMA moisture content (%, max.)	CT 226 or CT 370	1.0	1.0	1.0	1.0
Stabilometer value (min.) [c,d]	CT 366				
No. 4 and 3/8" gradings		30	30	--	--
1/2" and 3/4" gradings		37	35	23	--
Percent of crushed particles	CT 205				
Coarse aggregate (% min.)		90	25	--	90
One fractured face		75	--	90	75
Two fractured faces					
Fine aggregate (% min)					
(Passing No. 4 sieve and retained on No. 8 sieve.) One fractured face		70	20	70	90
Los Angeles Rattler (% max.)	CT 211				
Loss at 100 rev.		12	--	12	12
Loss at 500 rev.		45	50	40	40
Air voids content (%) [c, e]	CT 367	4 ± 2	4 ± 2	Specification ± 2	--
Fine aggregate angularity (% min.) [f]	CT 234	45	45	45	--
Flat and elongated particles (% max. by weight @ 5:1)	CT 235	Report only	Report only	Report only	Report only
Voids filled with asphalt (%) [g]	LP-3			Report only	
No. 4 grading		76.0 – 80.0	76.0 – 80.0		--
3/8" grading		73.0 – 76.0	73.0 – 76.0		
1/2" grading		65.0 – 75.0	65.0 – 75.0		

3/4" grading		65.0 – 75.0	65.0 – 75.0		
Voids in mineral aggregate (% min.) [g] No. 4 grading 3/8" grading 1/2" grading 3/4" grading	LP-2	 17.0 15.0 14.0 13.0	 17.0 15.0 14.0 13.0	 -- -- 18.0 – 23.0 [h] 18.0 – 23.0 [h]	--
Dust proportion [g] No. 4 and 3/8" gradings 1/2" and 3/4" gradings	LP-4	 0.9 – 2.0 0.6 – 1.3	 0.9 – 2.0 0.6 – 1.3	 Report only	 --
Smoothness	Section 39-1.12	12-foot straightedge and must-grind	12-foot straightedge and must-grind	12-foot straightedge and must-grind	12-foot straightedge and must-grind
Asphalt binder	Various	Section 92	Section 92	Section 92	Section 92
Asphalt rubber binder	Various	--	--	Section 92-1.02(C) and Section 39-1.02D	Section 92-1.02(C) and Section 39-1.02D
Asphalt modifier	Various	--	--	Section 39-1.02D	Section 39-1.02D
Crumb rubber modifier	Various	--	--	Section 39-1.02D	Section 39-1.02D

[a] The Engineer determines combined aggregate gradations containing RAP under Laboratory Procedure LP-9.
[b] The tolerances must comply with the allowable tolerances in Section 39-1.02E, "Aggregate."
[c] The Engineer reports the average of 3 tests from a single split sample.
[d] Modify California Test 304, Part 2.B.2.c: "After compaction in the mechanical compactor, cool to 140 °F ±5 °F by allowing the briquettes to cool at room temperature for 0.5 hour, then place the briquettes in the oven at 140 °F for a minimum of 2 hours and not more than 3 hours."
[e] The Engineer determines the bulk specific gravity of each lab-compacted briquette under California Test 308, Method A, and theoretical maximum specific gravity under California Test 309.
[f] The Engineer waives this specification if HMA contains 10 percent or less of nonmanufactured sand by weight of total aggregate. Manufactured sand is fine aggregate produced by crushing rock or gravel.
[g] Report only if the adjustment for asphalt binder content target value is less than or equal to ± 0.3 percent from OBC.
[h] Voids in mineral aggregate for RHMA-G must be within this range.

No single test result may represent more than the smaller of 750 tons or 1 day's production.

For any single quality characteristic except smoothness, if 2 consecutive acceptance test results do not comply with the specifications:

1. Stop production.

2. Take corrective action.
3. In the Engineer's presence, take samples and split each sample into 4 parts. Test 1 part for compliance with the specifications and submit 3 parts to the Engineer. The Engineer tests 1 part for compliance with the specifications and reserves and stores 2 parts.
4. Demonstrate compliance with the specifications before resuming production and placement on the State highway.

39-3.03 SPREADING AND COMPACTING EQUIPMENT

Each paver spreading HMA Type A and Type B must be followed by 3 rollers:

1. One vibratory roller specifically designed to compact HMA. The roller must be capable of at least 2,500 vibrations per minute and must be equipped with amplitude and frequency controls. The roller's gross static weight must be at least 7.5 tons.
2. One oscillating type pneumatic-tired roller at least 4 feet wide. Pneumatic tires must be of equal size, diameter, type, and ply. The tires must be inflated to 60 psi minimum and maintained so that the air pressure does not vary more than 5 psi.
3. One steel-tired, 2-axle tandem roller. The roller's gross static weight must be at least 7.5 tons.

Each roller must have a separate operator. Rollers must be self-propelled and reversible.

Compact RHMA-G under the specifications for compacting HMA Type A and Type B except do not use pneumatic-tired rollers.

Compact OGFC with steel-tired, 2-axle tandem rollers. If placing over 300 tons of OGFC per hour, use at least 3 rollers for each paver. If placing less than 300 tons of OGFC per hour, use at least 2 rollers for each paver. Each roller must weigh between 126 pounds to 172 pounds per linear inch of drum width. Turn the vibrator off.

39-3.04 TRANSPORTING, SPREADING, AND COMPACTING

Pave HMA in maximum 0.25-foot thick compacted layers.

If the surface to be paved is both in sunlight and shade, pavement surface temperatures are taken in the shade.

Spread HMA Type A and Type B only if atmospheric and surface temperatures are:

Minimum Atmospheric and Surface Temperatures

Compacted Layer Thickness, feet	Atmospheric,° F		Surface,° F	
	Unmodified Asphalt Binder	Modified Asphalt Binder[a]	Unmodified Asphalt Binder	Modified Asphalt Binder [a]
< 0.15	55	50	60	55
0.15 – 0.25	45	45	50	50

Note:
[a] Except asphalt rubber binder.

If the asphalt binder for HMA Type A and Type B is:

1. Unmodified asphalt binder, complete:

1.1. First coverage of breakdown compaction before the surface temperature drops below 250 °F
1.2. Breakdown and intermediate compaction before the surface temperature drops below 200 °F
1.3. Finish compaction before the surface temperature drops below 150 °F

2. Modified asphalt binder, complete:

2.1. First coverage of breakdown compaction before the surface temperature drops below 240 °F
2.2. Breakdown and intermediate compaction before the surface temperature drops below 180 °F
2.3. Finish compaction before the surface temperature drops below 140 °F

For RHMA-G:

1. Only spread and compact if the atmospheric temperature is at least 55 °F and the surface temperature is at least 60 °F.
2. Complete the first coverage of breakdown compaction before the surface temperature drops below 285 °F.
3. Complete breakdown and intermediate compaction before the surface temperature drops below 250 °F.
4. Complete finish compaction before the surface temperature drops below 200 °F.
5. If the atmospheric temperature is below 70 °F, cover loads in trucks with tarpaulins. The tarpaulins must completely cover the exposed load until you transfer the mixture to the paver's hopper or to the pavement surface.

For OGFC with unmodified asphalt binder:

1. Only spread and compact if the atmospheric temperature is at least 55 °F and the surface temperature is at least 60 °F.
2. Complete first coverage using 2 rollers before the surface temperature drops below 240 °F.
3. Complete all compaction before the surface temperature drops below 200 °F.
4. If the atmospheric temperature is below 70 °F, cover loads in trucks with tarpaulins. The tarpaulins must completely cover the exposed load until you transfer the mixture to the paver's hopper or to the pavement surface.

For OGFC with modified asphalt binder except asphalt rubber binder:

1. Only spread and compact if the atmospheric temperature is at least 50 °F and the surface temperature is at least 50 °F.
2. Complete first coverage using 2 rollers before the surface temperature drops below 240 °F.
3. Complete all compaction before the surface temperature drops below 180 °F.
4. If the atmospheric temperature is below 70 °F, cover loads in trucks with tarpaulins. The tarpaulins must completely cover the exposed load until you transfer the mixture to the paver's hopper or to the pavement surface.

For RHMA-O and RHMA-O-HB:

1. Only spread and compact if the atmospheric temperature is at least 55 °F and surface temperature is at least 60 °F.
2 Complete the 1st coverage using 2 rollers before the surface temperature drops below 280 °F.
3. Complete compaction before the surface temperature drops below 250 °F.
4. If the atmospheric temperature is below 70 °F, cover loads in trucks with tarpaulins. The tarpaulins must completely cover the exposed load until the mixture is transferred to the paver's hopper or to the pavement surface.

For RHMA-G and OGFC, tarpaulins are not required if the time from discharge to truck until transfer to the paver's hopper or the pavement surface is less than 30 minutes.

HMA compaction coverage is the number of passes needed to cover the paving width. A pass is 1 roller's movement parallel to the paving in either direction. Overlapping passes are part of the coverage being made and are not a subsequent coverage. Do not start a coverage until completing the prior coverage.

Start rolling at the lower edge and progress toward the highest part.

Perform breakdown compaction of each layer of HMA Type A, Type B, and RHMA-G with 3 coverages using a vibratory roller. The speed of the vibratory roller in miles per hour must not exceed the vibrations per minute divided by 1,000. If the HMA layer thickness is less than 0.08 foot, turn the vibrator off. The Engineer may order fewer coverages if the HMA layer thickness is less than 0.15 foot.

Perform intermediate compaction of each layer of HMA Type A and Type B with 3 coverages using a pneumatic-tired roller at a speed not to exceed 5 mph.

Perform finish compaction of HMA Type A, Type B, and RHMA-G with 1 coverage using a steel-tired roller.

Compact OGFC with 2 coverages using steel-tired rollers.

39-4 QUALITY CONTROL / QUALITY ASSURANCE

39-4.01 DESCRIPTION

If HMA is specified as Quality Control / Quality Assurance, construct it under Section 39-1, "General," this Section 39-4, "Quality Control / Quality Assurance," and Section 39-5, "Measurement and Payment."

39-4.02 GENERAL

The QC / QA construction process consists of:

1. Establishing, maintaining, and changing if needed a quality control system providing assurance the HMA complies with the specifications
2. Sampling and testing at specified intervals, or sublots, to demonstrate compliance and to control process
3. The Engineer sampling and testing at specified intervals to verify testing process and HMA quality
4. The Engineer using test results, statistical evaluation of verified quality control tests, and inspection to accept HMA for payment

A lot is a quantity of HMA. The Engineer designates a new lot when:

1. 20 sublots are complete
2. The JMF changes
3. Production stops for more than 30 days

Each lot consists of no more than 20 sublots. A sublot is 750 tons except HMA paved at day's end greater than 250 tons is a sublot. If HMA paved at day's end is less than 250 tons, you may either make this quantity a sublot or include it in the previous sublot's test results for statistical evaluation.

39-4.03 CONTRACTOR QUALITY CONTROL

39-4.03A General

Use a composite quality factor, QF_C, and individual quality factors, QF_{QCi}, to control your process and evaluate your quality control program. For quality characteristics without quality factors, use your quality control plan's action limits to control process.

Control HMA quality including:

1. Materials
2. Proportioning
3. Spreading and compacting
4. Finished roadway surface

Develop, implement, and maintain a quality control program that includes:

1. Inspection
2. Sampling
3. Testing

39-4.03B Quality Control Plan

With the JMF submittal, submit a written Quality Control Plan (QCP). The QCP must comply with the Department's Quality Control Manual for Hot Mix Asphalt Production and Placement. Discuss the QCP with the Engineer during the prepaving conference.

The Engineer reviews each QCP within 5 business days from the submittal. Hold HMA production until the Engineer accepts the QCP in writing. The Engineer's QCP acceptance does not mean your compliance with the QCP will result in acceptable HMA. Section 39-1.05, "Engineer's Acceptance," specifies HMA acceptance.

The QCP must include the name and qualifications of a Quality Control Manager. The Quality Control Manager administers the QCP and during paving must be at the job site within 3 hours of receiving notice. The Quality Control Manager must not be any of the following on the project:

1. Foreman
2. Production or paving crewmember
3. Inspector
4. Tester

The QCP must include action limits and details of corrective action you will take if a test result for any quality characteristic falls outside an action limit.

As work progresses, you must submit a written QCP supplement to change quality control procedures, personnel, tester qualification status, or laboratory accreditation status.

39-4.03C Quality Control Inspection, Sampling, And Testing

Sample, test, inspect, and manage HMA quality control.

Provide a roadway inspector while HMA paving activities are in progress. Provide a plant inspector during HMA production.

Inspectors must comply with the Department's Quality Control Manual for Hot Mix Asphalt Production and Placement.

Provide a testing laboratory and personnel for quality control testing. Provide the Engineer unrestricted access to the quality control activities. Before providing services for the project, the Engineer reviews, accredits, and qualifies the testing laboratory and personnel under the Department's Independent Assurance Program.

The minimum random sampling and testing for quality control is:

Minimum Quality Control – QC / QA

Quality Characteristic	Test Method	Min-imum Sampl-ing and Testin g Freque n-cy	HMA Type			Locatio n of Sampli ng	Max. Report-ing Time Allow-ance
			A	B	RHMA-G		
Aggregate gradation [a]	CT 202	1 per 750 tons	JMF ± Toleranc e [b]	JMF ± Tolerance [b]	JMF ± Tolerance [b]	CT 125	24 hours
Asphalt binder content (%)	CT 379 or 382		JMF ±0.45	JMF ±0.45	JMF ±0.5	Loose Mix Behind Paver See CT 125	
Field compaction (% max. theoretical density) [c,d]	QC Plan		92 - 96	92 - 96	91 - 96	QC Plan	
Aggregate moisture content at continuous mixing plants and RAP moisture content at continuous mixing plants and batch mixing plants [e]	CT 226 or CT 370	2 per day during produc -tion	--	--	--	Stock-piles or cold feed belts	--
Sand equivalent (min.) [f]	CT 217	1 per 750 tons	47	42	47	CT 125	24 hours
HMA moisture content (%,max.)	CT 226 or CT 370	1 per 2,500 tons but not less than 1 per paving day	1.0	1.0	1.0	Loose Mix Behind Paver See CT 125	24 hours

Stabilometer Value (min.) [f, g] No. 4 and 3/8" gradings 1/2" and 3/4" gradings	CT 366	1 per 4,000 tons or 2 per 5 business days, whichever is more	30 37	30 35	-- 23		48 hours
Air voids content (%)[f, h]	CT 367		4 ± 2	4 ± 2	Specification ± 2		
Percent of crushed particles coarse aggregate (% min.) One fractured face Two fractured faces Fine aggregate (% min) (Passing No. 4 sieve and retained on No. 8 sieve.) One fractured face	CT 205	As necessary and design at-ed in QCP. At least once per project.	90 75 70	25 -- 20	-- 90 70	CT 125	48 hours
Los Angeles Rattler (% max.) Loss at 100 rev. Loss at 500 rev.	CT 211		12 45	-- 50	12 40	CT 125	
Fine aggregate angularity (% min.) [i]	CT 234		45	45	45	CT 125	
Flat and elongated particle (% max. by weight @ 5:1)	CT 235		Report only	Report only	Report only	CT 125	

Voids filled with asphalt (%)[j] No. 4 grading 3/8" grading 1/2" grading 3/4" grading	LP-3		76.0 – 80.0 73.0 – 76.0 65.0 – 75.0 65.0 – 75.0	76.0 – 80.0 73.0 – 76.0 65.0 – 75.0 65.0 – 75.0	Report only	LP-3	
Voids in mineral aggregate (% min.)[j] No. 4 grading 3/8" grading 1/2" grading 3/4" grading	LP-2		17.0 15.0 14.0 13.0	17.0 15.0 14.0 13.0	-- -- 18.0 – 23.0[k] 18.0 – 23.0[k]	LP-2	
Dust proportion[j] No. 4 and 3/8" gradings 1/2" and 3/4" gradings	LP-4		0.9 – 2.0 0.6 – 1.3	0.9 – 2.0 0.6 – 1.3	Report only	LP-4	
Smoothness	Section 39-1.12	--	12-foot straight-edge, must-grind, and PI_0	12-foot straight-edge, must-grind, and PI_0	12-foot straight-edge, must-grind, and PI_0	--	
Asphalt rubber binder viscosity @ 375 °F, centipoises	Section 39-1.02D	--	--	--	1,500 – 4,000	Section 39-1.02D	24 hours
Crumb rubber modifier	Section 39-1.02D	--	--	--	Section 39-1.02D	Section 39-1.02D	48 hours

Notes:

[a] Determine combined aggregate gradation containing RAP under Laboratory Procedure LP-9.

[b] The tolerances must comply with the allowable tolerances in Section 39-1.02E, "Aggregate."

[c] Determine field compaction for any of the following conditions:

1. 1/2-inch, 3/8-inch, No. 4 aggregate grading is used and the specified total paved thickness is at least 0.15 foot.
2. 3/4-inch aggregate grading is used and the specified total paved thickness is at least 0.20 foot.

[d] To determine field compaction use:

1. In-place density measurements using the method specified in your QC.
2. California Test 309 to determine maximum theoretical density at the frequency specified in California Test 375, Part 5C.

[e] For adjusting the plant controller at the HMA plant.
[f] Report the average of 3 tests from a single split sample.
[g] Modify California Test 304, Part 2.B.2.c: "After compaction in the mechanical compactor, cool to 140 °F ± 5 °F by allowing the briquettes to cool at room temperature for 0.5 hour, then place the briquettes in the oven at 140 °F for a minimum of 2 hours and not more than 3 hours."
[h] Determine the bulk specific gravity of each lab-compacted briquette under California Test 308, Method A, and theoretical maximum specific gravity under California Test 309.
[i] The Engineer waives this specification if HMA contains 10 percent or less of nonmanufactured sand by weight of total aggregate. Manufactured sand is fine aggregate produced by crushing rock or gravel.
[j] Report only if the adjustment for asphalt binder content target value is less than or equal to ± 0.3 percent from OBC.
[k] Voids in mineral aggregate for RHMA-G must be within this range.

Within the specified reporting time, submit written test results including:

1. Sampling location, quantity, and time
2. Testing results
3. Supporting data and calculations

If test results for any quality characteristic are beyond the action limits in the QCP, take corrective actions. Document the corrective actions taken in the inspection records under Section 39-4.03E, "Records of Inspection and Testing."

Stop production, notify the Engineer in writing, take corrective action, and demonstrate compliance with the specifications before resuming production and placement on the State highway if:

1. A lot's composite quality factor, QF_C, or an individual quality factor, QF_{QCi} for i = 3, 4, or 5, is below 0.90 determined under Section 39-4.03F, "Statistical Evaluation," using quality control data
2. An individual quality factor, QF_{QCi} for i = 1 or 2, is below 0.75 using quality control data
3. Quality characteristics for which a quality factor, QF_{QCi}, is not determined has 2 consecutive quality control tests not in compliance with the specifications

39-4.03D Charts And Records

Record sampling and testing results for quality control on forms provided in the "Quality Control Manual for Hot Mix Asphalt," or on forms you submit with the QCP. The QCP must also include form posting locations and submittal times.

Submit quality control test results using the Department's statistical evaluation program, HMAPay, available at

www.dot.ca.gov/hq/construc/hma/index.htm

39-4.03E Records Of Inspection And Testing

During HMA production, submit in writing a daily:

1. HMA Construction Daily Record of Inspection. Also make this record available at the HMA plant and job site each day.
2. HMA Inspection and Testing Summary. Include in the summary:

    2.1. QC worksheet with updated test results from the HMAPay program
    2.2. Test forms with the testers' signatures and Quality Control Manager's initials.
    2.3. Inspection forms with the inspectors' signatures and Quality Control Manager's initials.
    2.4. A list and explanation of deviations from the specifications or regular practices.
    2.5. A signed statement by the Quality Control Manager that says:

    "It is hereby certified that the information contained in this record is accurate, and that information, tests, or calculations documented herein comply with the specifications of the contract and the standards set forth in the testing procedures. Exceptions to this certification are documented as part of this record."

Retain for inspection the records generated as part of quality control including inspection, sampling, and testing for at least 3 years after final acceptance.

39-4.03F Statistical Evaluation

General

Determine a lot's composite quality factor, QF_C, and the individual quality factors, QF_{QCi}. Perform statistical evaluation calculations to determine these quality factors based on quality control test results for:

1. Aggregate gradation
2. Asphalt binder content
3. Percent of maximum theoretical density

The Engineer grants a waiver and you must use 1.0 as the individual quality factor for percent of maximum theoretical density, QF_{QC5}, for HMA paved in:

1. Areas where the total paved thickness is less than 0.15 foot
2. Areas where the total paved thickness is less than 0.20 foot and a 3/4-inch grading is specified and used
3. Dig outs
4. Leveling courses
5. Areas where, in the opinion of the Engineer, compaction or compaction measurement by conventional methods is impeded

Statistical Evaluation Calculations

Use the Variability-Unknown / Standard Deviation Method to determine the percentage of a lot not in compliance with the specifications.

Determine the percentage of work not in compliance with the specification limits for each quality characteristic as follows:

1. Calculate the arithmetic mean ($\overline{X}$) of the test values

$$\bar{X} = \frac{\Sigma x}{n}$$

where:

x = individual test values
n = number of test values

2. Calculate the standard deviation

$$s = \sqrt{\frac{n\,(\Sigma x^2)-(\Sigma x)^2}{n(n-1)}}$$

where:

$\sum(x^2)$ = sum of the squares of individual test values
$(\sum x)^2$ = sum of the individual test values squared
n = number of test values

3. Calculate the upper quality index (Qu)

$$Q_u = \frac{USL - \bar{X}}{s}$$

where:

USL = target value plus the production tolerance or upper specification limit
s = standard deviation
$\bar{X}$ = arithmetic mean

4. Calculate the lower quality index (QL);

$$Q_L = \frac{\bar{X} - LSL}{s}$$

where:

LSL = target value minus production tolerance or lower specification limit
s = standard deviation
$\bar{X}$ = arithmetic mean

5. From the table, Upper Quality Index Q_U or Lower Quality Index Q_L, of this Section 39-4.03F, "Statistical Evaluation", determine P_U ;

where:

P_U = the estimated percentage of work outside the USL.
$P_U = 0$, when USL is not specified.

6. From the table, Upper Quality Index Q_U or Lower Quality Index Q_L, of this Section 39-4.03F, "Statistical Evaluation," determine P_L;

where:

P_L = the estimated percentage of work outside the LSL.
$P_L = 0$, when LSL is not specified.

7. Calculate the total estimated percentage of work outside the USL and LSL, percent defective

   Percent defective $= P_U + P_L$

P_U and P_L are determined from:

P_U or P_L	**Upper Quality Index Q_U or Lower Quality Index Q_L**												
	Sample Size (n)												
	5	6	7	8	9	10-11	12-14	15-17	18-22	23-29	30-42	43-66	>66
0	1.72	1.88	1.99	2.07	2.13	2.20	2.28	2.34	2.39	2.44	2.48	2.51	2.56
1	1.64	1.75	1.82	1.88	1.91	1.96	2.01	2.04	2.07	2.09	2.12	2.14	2.16
2	1.58	1.66	1.72	1.75	1.78	1.81	1.84	1.87	1.89	1.91	1.93	1.94	1.95
3	1.52	1.59	1.63	1.66	1.68	1.71	1.73	1.75	1.76	1.78	1.79	1.80	1.81
4	1.47	1.52	1.56	1.58	1.60	1.62	1.64	1.65	1.66	1.67	1.68	1.69	1.70
5	1.42	1.47	1.49	1.51	1.52	1.54	1.55	1.56	1.57	1.58	1.59	1.59	1.60
6	1.38	1.41	1.43	1.45	1.46	1.47	1.48	1.49	1.50	1.50	1.51	1.51	1.52
7	1.33	1.36	1.38	1.39	1.40	1.41	1.41	1.42	1.43	1.43	1.44	1.44	1.44
8	1.29	1.31	1.33	1.33	1.34	1.35	1.35	1.36	1.36	1.37	1.37	1.37	1.38
9	1.25	1.27	1.28	1.28	1.29	1.29	1.30	1.30	1.30	1.31	1.31	1.31	1.31
10	1.21	1.23	1.23	1.24	1.24	1.24	1.25	1.25	1.25	1.25	1.25	1.26	1.26
11	1.18	1.18	1.19	1.19	1.19	1.19	1.20	1.20	1.20	1.20	1.20	1.20	1.20
12	1.14	1.14	1.15	1.15	1.15	1.15	1.15	1.15	1.15	1.15	1.15	1.15	1.15
13	1.10	1.10	1.10	1.10	1.10	1.10	1.11	1.11	1.11	1.11	1.11	1.11	1.11
14	1.07	1.07	1.07	1.06	1.06	1.06	1.06	1.06	1.06	1.06	1.06	1.06	1.06
15	1.03	1.03	1.03	1.03	1.02	1.02	1.02	1.02	1.02	1.02	1.02	1.02	1.02
16	1.00	0.99	0.99	0.99	0.99	0.98	0.98	0.98	0.98	0.98	0.98	0.98	0.98
17	0.97	0.96	0.95	0.95	0.95	0.95	0.94	0.94	0.94	0.94	0.94	0.94	0.94
18	0.93	0.92	0.92	0.92	0.91	0.91	0.91	0.91	0.90	0.90	0.90	0.90	0.90
19	0.90	0.89	0.88	0.88	0.88	0.87	0.87	0.87	0.87	0.87	0.87	0.87	0.87
20	0.87	0.86	0.85	0.85	0.84	0.84	0.84	0.83	0.83	0.83	0.83	0.83	0.83
21	0.84	0.82	0.82	0.81	0.81	0.81	0.80	0.80	0.80	0.80	0.80	0.80	0.79
22	0.81	0.79	0.79	0.78	0.78	0.77	0.77	0.77	0.76	0.76	0.76	0.76	0.76
23	0.77	0.76	0.75	0.75	0.74	0.74	0.74	0.73	0.73	0.73	0.73	0.73	0.73
24	0.74	0.73	0.72	0.72	0.71	0.71	0.70	0.70	0.70	0.70	0.70	0.70	0.70
25	0.71	0.70	0.69	0.69	0.68	0.68	0.67	0.67	0.67	0.67	0.67	0.67	0.66
26	0.68	0.67	0.67	0.65	0.65	0.65	0.64	0.64	0.64	0.64	0.64	0.64	0.63
27	0.65	0.64	0.63	0.62	0.62	0.62	0.61	0.61	0.61	0.61	0.61	0.61	0.60
28	0.62	0.61	0.60	0.59	0.59	0.59	0.58	0.58	0.58	0.58	0.58	0.58	0.57
29	0.59	0.58	0.57	0.57	0.56	0.56	0.55	0.55	0.55	0.55	0.55	0.55	0.54
30	0.56	0.55	0.54	0.54	0.53	0.53	0.52	0.52	0.52	0.52	0.52	0.52	0.52
31	0.53	0.52	0.51	0.51	0.50	0.50	0.50	0.49	0.49	0.49	0.49	0.49	0.49
32	0.50	0.49	0.48	0.48	0.48	0.47	0.47	0.47	0.46	0.46	0.46	0.46	0.46
33	0.47	0.48	0.45	0.45	0.45	0.44	0.44	0.44	0.44	0.43	0.43	0.43	0.43
34	0.45	0.43	0.43	0.42	0.42	0.42	0.41	0.41	0.41	0.41	0.41	0.41	0.40
35	0.42	0.40	0.40	0.39	0.39	0.39	0.38	0.38	0.38	0.38	0.38	0.38	0.38
36	0.39	0.38	0.37	0.37	0.36	0.36	0.36	0.36	0.36	0.36	0.36	0.36	0.36
37	0.36	0.35	0.34	0.34	0.34	0.33	0.33	0.33	0.33	0.33	0.33	0.33	0.32
38	0.33	0.32	0.32	0.31	0.31	0.31	0.30	0.30	0.30	0.30	0.30	0.30	0.30
39	0.30	0.30	0.29	0.28	0.28	0.28	0.28	0.28	0.28	0.28	0.28	0.28	0.28
40	0.28	0.25	0.25	0.25	0.25	0.25	0.25	0.25	0.25	0.25	0.25	0.25	0.25
41	0.25	0.23	0.23	0.23	0.23	0.23	0.23	0.23	0.23	0.23	0.23	0.23	0.23
42	0.23	0.20	0.20	0.20	0.20	0.20	0.20	0.20	0.20	0.20	0.20	0.20	0.20

43	0.18	0.18	0.18	0.18	0.18	0.18	0.18	0.18	0.18	0.18	0.18	0.18	0.18
44	0.16	0.15	0.15	0.15	0.15	0.15	0.15	0.15	0.15	0.15	0.15	0.15	0.15
45	0.13	0.13	0.13	0.13	0.13	0.13	0.13	0.13	0.13	0.13	0.13	0.13	0.13
46	0.10	0.10	0.10	0.10	0.10	0.10	0.10	0.10	0.10	0.10	0.10	0.10	0.10
47	0.08	0.08	0.08	0.08	0.08	0.08	0.08	0.08	0.08	0.08	0.08	0.08	0.08
48	0.05	0.05	0.05	0.05	0.05	0.05	0.05	0.05	0.05	0.05	0.05	0.05	0.05
49	0.03	0.03	0.03	0.03	0.03	0.03	0.03	0.03	0.03	0.03	0.03	0.03	0.03
50	0.00	0.00	0.00	0.00	0.00	0.00	0.00	0.00	0.00	0.00	0.00	0.00	0.00

1. If the value of Q_U or Q_L does not correspond to a value in the table, use the next lower value.
2. If Q_U or Q_L are negative values, P_U or P_L is equal to 100 minus the table value for P_U or P_L.

Quality Factor Determination

Determine individual quality factors, QF_{QCi}, using percent defective = $P_U + P_L$ and:

Quality Factors

Quality Factor	Maximum Allowable Percent Defective ($P_U + P_L$)												
	Sample Size (n)												
	5	6	7	8	9	10-11	12-14	15-17	18-22	23-29	30-42	43-66	>66
1.05				0	0	0	0	0	0	0	0	0	0
1.04			0	1	3	5	4	4	4	3	3	3	3
1.03		0	2	4	6	8	7	7	6	5	5	4	4
1.02		1	3	6	9	11	10	9	8	7	7	6	6
1.01	0	2	5	8	11	13	12	11	10	9	8	8	7
1.00	22	20	18	17	16	15	14	13	12	11	10	9	8
0.99	24	22	20	19	18	17	16	15	14	13	11	10	9
0.98	26	24	22	21	20	19	18	16	15	14	13	12	10
0.97	28	26	24	23	22	21	19	18	17	16	14	13	12
0.96	30	28	26	25	24	22	21	19	18	17	16	14	13
0.95	32	29	28	26	25	24	22	21	20	18	17	16	14
0.94	33	31	29	28	27	25	24	22	21	20	18	17	15
0.93	35	33	31	29	28	27	25	24	22	21	20	18	16
0.92	37	34	32	31	30	28	27	25	24	22	21	19	18
0.91	38	36	34	32	31	30	28	26	25	24	22	21	19
0.90	39	37	35	34	33	31	29	28	26	25	23	22	20
0.89	41	38	37	35	34	32	31	29	28	26	25	23	21
0.88	42	40	38	36	35	34	32	30	29	27	26	24	22
0.87	43	41	39	38	37	35	33	32	30	29	27	25	23
0.86	45	42	41	39	38	36	34	33	31	30	28	26	24
0.85	46	44	42	40	39	38	36	34	33	31	29	28	25
0.84	47	45	43	42	40	39	37	35	34	32	30	29	27
0.83	49	46	44	43	42	40	38	36	35	33	31	30	28
0.82	50	47	46	44	43	41	39	38	36	34	33	31	29
0.81	51	49	47	45	44	42	41	39	37	36	34	32	30
0.80	52	50	48	46	45	44	42	40	38	37	35	33	31
0.79	54	51	49	48	46	45	43	41	39	38	36	34	32
0.78	55	52	50	49	48	46	44	42	41	39	37	35	33
0.77	56	54	52	50	49	47	45	43	42	40	38	36	34
0.76	57	55	53	51	50	48	46	44	43	41	39	37	35
0.75	58	56	54	52	51	49	47	46	44	42	40	38	36
	60	57	55	53	52	51	48	47	45	43	41	40	37
	61	58	56	55	53	52	50	48	46	44	43	41	38
Reject	62	59	57	56	54	53	51	49	47	45	44	42	39
	63	61	58	57	55	54	52	50	48	47	45	43	40
	64	62	60	58	57	55	53	51	49	48	46	44	41
Reject Values Greater Than Those Shown Above													

Notes:

1. To obtain a quality factor when the estimated percent outside specification limits from table, "Upper Quality Index Q_U or Lower Quality Index Q_L," does not correspond to a value in the table, use the next larger value.

Compute the composite of single quality factors, QF_C, for a lot using:

$$QF_C = \sum_{i=1}^{5} w_i \, QF_{QC_i}$$

where:

$QF_C =$ the composite quality factor for the lot rounded to 2 decimal places.
$QF_{QCi} =$ the quality factor for the individual quality characteristic.
w = the weighting factor listed in the table HMA Acceptance – QC / QA.
i = the quality characteristic index number in the table HMA Acceptance – QC / QA.

39-4.04 ENGINEER'S QUALITY ASSURANCE

39-4.04A General

The Engineer assures quality by:

1. Reviewing mix designs and proposed JMF
2. Inspecting procedures
3. Conducting oversight of quality control inspection and records
4. Verification sampling and testing during production and paving

39-4.04B Verification Sampling And Testing

General

The Engineer samples:

1. Aggregate to verify gradation
2. HMA to verify asphalt binder content

Verification

For aggregate gradation and asphalt binder content, the minimum ratio of verification testing frequency to quality control testing frequency is 1:5. The Engineer performs at least 3 verification tests per lot.

Using the t-test, the Engineer compares quality control tests results for aggregate gradation and asphalt binder content with corresponding verification test results. The Engineer uses the average and standard deviation of up to 20 sequential sublots for the comparison. The Engineer uses production start-up evaluation tests to represent the first sublot. When there are less than 20 sequential sublots, the Engineer uses the maximum number of sequential sublots available. The 21st sublot becomes the 1st sublot (n = 1) in the next lot.

The t-value for a group of test data is computed as follows:

$$t = \frac{\left|\overline{X}_c - \overline{X}_v\right|}{S_p\sqrt{\frac{1}{n_c} + \frac{1}{n_v}}} \qquad \text{and} \qquad S_p^2 = \frac{S_c^2(n_c - 1) + S_v^2(n_v - 1)}{n_c + n_v - 2}$$

where:

$n_c =$ Number of quality control tests (2 minimum, 20 maximum).

n_v = Number of verification tests (minimum of 1 required).
$\overline{X}_c$ = Mean of quality control tests.
$\overline{X}_v$ = Mean of verification tests.
S_p = Pooled standard deviation (When $n_v = 1$, $S_p = S_c$).
S_c = Standard deviation of quality control tests.
S_v = Standard deviation of verification tests (when $n_v > 1$).

The comparison of quality control test results and the verification test results is at a level of significance of $\alpha = 0.025$. The Engineer computes t and compares it to the critical t-value, t_{crit}, from:

Critical T-Value

Degrees of freedom (n_c+n_v-2)	t_{crit} (for $\alpha = 0.025$)	Degrees of freedom (n_c+n_v-2)	t_{crit} (for $\alpha = 0.025$)
1	24.452	18	2.445
2	6.205	19	2.433
3	4.177	20	2.423
4	3.495	21	2.414
5	3.163	22	2.405
6	2.969	23	2.398
7	2.841	24	2.391
8	2.752	25	2.385
9	2.685	26	2.379
10	2.634	27	2.373
11	2.593	28	2.368
12	2.560	29	2.364
13	2.533	30	2.360
14	2.510	40	2.329
15	2.490	60	2.299
16	2.473	120	2.270
17	2.458	∞	2.241

If the t-value computed is less than or equal to t_{crit}, quality control test results are verified.

If the t-value computed is greater than t_{crit} and both $\overline{X}_v$ and $\overline{X}_c$ comply with acceptance specifications, the quality control tests are verified. You may continue to produce and place HMA with the following allowable differences:

1. $\left|\overline{X}_v - \overline{X}_c\right| \leq 1.0$ percent for any grading
2. $\left|\overline{X}_v - \overline{X}_c\right| \leq 0.1$ percent for asphalt binder content

If the t-value computed is greater than t_{crit} and the $\left|\overline{X}_v - \overline{X}_c\right|$ for grading or asphalt binder content are greater than the allowable differences, quality control test results are not verified and:

1. The Engineer notifies you in writing.

2. You and the Engineer must investigate why the difference exist.
3. If the reason for the difference cannot be found and corrected, the Engineer's test results are used for acceptance and pay.

39-4.05 ENGINEER'S ACCEPTANCE

39-4.05A Testing

The Engineer samples for acceptance testing and tests for:

HMA Acceptance – QC / QA

Index (i)	Quality Characteristic				Weight-ing Factor (w)	Test Method	HMA Type		
							A	B	RHMA-G
		Aggregate gradation [a]							
	Sieve	3/4"	1/2"	3/8"					
1	1/2"	X [b]	--	--	0.05	CT 202	JMF ± Tolerance [c]		
1	3/8"	--	X	--	0.05				
1	No. 4	--	--	X	0.05				
2	No. 8	X	X	X	0.10				
3	No. 200	X	X	X	0.15				
4	Asphalt binder content (%)				0.30	CT 379 or 382	JMF ± 0.45	JMF ± 0.45	JMF ± 0.5
5	Field compaction (% max. theoretical density) [d,e]				0.40	CT 375	92 – 96	92 – 96	91 – 96
	Sand equivalent (min.) [f]					CT 217	47	42	47
	Stabilometer value (min.) [f,, g] No. 4 and 3/8" gradings 1/2" and 3/4" gradings					CT 366	 30 37	 30 35	 -- 23
	Air voids content (%)[f, h]					CT 367	4 ± 2	4 ± 2	Specifica-tion ± 2
	Percent of crushed particles coarse aggregate (% min.) One fractured face Two fractured faces Fine aggregate (% min) (Passing No. 4 sieve and retained on No. 8 sieve.) One fractured face					CT 205	 90 75 70	 25 -- 20	 -- 90 70
	HMA moisture content (%, max.)					CT 226 or CT 370	1.0	1.0	1.0
	Los Angeles Rattler (% max.) Loss at 100 rev. Loss at 500 rev.					CT 211	 12 45	 -- 50	 12 40
	Fine aggregate angularity (% min.) [i]					CT 234	45	45	45
	Flat and elongated particle (% max. by weight @ 5:1)					CT 235	Report only	Report only	Report only

	Voids in mineral aggregate (% min.)[j] No. 4 grading 3/8" grading 1/2" grading 3/4" grading		LP-2	17.0 15.0 14.0 13.0	17.0 15.0 14.0 13.0	(Note k) -- -- 18.0 - 23.0 18.0 - 23.0
	Voids filled with asphalt (%)[j] No. 4 grading 3/8" grading 1/2" grading 3/4" grading		LP-3	76.0 - 80.0 73.0 - 76.0 65.0 - 75.0 65.0 - 75.0	76.0 - 80.0 73.0 - 76.0 65.0 - 75.0 65.0 - 75.0	Report only
	Dust proportion[j] No. 4 and 3/8" gradings 1/2" and 3/4" gradings		LP-4	0.9 - 2.0 0.6 - 1.3	0.9 – 2.0 0.6 – 1.3	Report only
	Smoothness		Section 39-1.12	12-foot straight-edge, must-grind, and PI_0	12-foot straight-edge, must-grind, and PI_0	12-foot straight-edge, must-grind, and PI_0
	Asphalt binder		Various	Section 92	Section 92	Section 92
	Asphalt rubber binder		Various	--	--	Section 92-1.02(C) and Section 39-1.02D
	Asphalt modifier		Various	--	--	Section 39-1.02D
	Crumb rubber modifier		Various	--	--	Section 39-1.02D

Notes:
[a] The Engineer determines combined aggregate gradations containing RAP under Laboratory Procedure LP-9.
[b] "X" denotes the sieves the Engineer considers for the specified aggregate gradation.
[c] The tolerances must comply with the allowable tolerances in Section 39-1.02E, "Aggregate."

[d] The Engineer determines field compaction for any of the following conditions:

1. 1/2-inch, 3/8-inch, or No.4 aggregate grading is used and the specified total paved thickness is at least 0.15 foot.
2. 3/4-inch aggregate grading is used and the specified total paved thickness is at least 0.20 foot.

[e] To determined field compaction, the Engineer uses:

1. California Test 308, Method A, to determine in-place density of each density core.
2. California Test 309 to determine maximum theoretical density at the frequency specified in California Test 375, Part 5C.

[f] The Engineer reports the average of 3 tests from a single split sample.

[g] Modify California Test 304, Part 2.B.2.c: "After compaction in the mechanical compactor, cool to 140 °F ± 5 °F by allowing the briquettes to cool at room temperature for 0.5 hour, then place the briquettes in the oven at 140 °F for a minimum of 2 hours and not more than 3 hours."

[h] The Engineer determines the bulk specific gravity of each lab-compacted briquette under California Test 308, Method A, and theoretical maximum specific gravity under California Test 309.

[i] The Engineer waives this specification if HMA contains 10 percent or less of nonmanufactured sand by weight of total aggregate. Manufactured sand is fine aggregate produced by crushing rock or gravel.

[J] Report only if the adjustment for asphalt binder content target value is less than or equal to ± 0.3 percent from OBC.

[k] Voids in mineral aggregate for RHMA-G must be within this range.

The Engineer determines the percent of maximum theoretical density from the average density of 3 density cores you take from every 750 tons of production or part thereof divided by the maximum theoretical density.

The Engineer determines the percent of maximum theoretical density from density cores taken from the final layer measured the full depth of the total paved HMA thickness if any of the following applies:

1. If 1/2-inch, 3/8-inch, or No. 4 aggregate grading is used and the specified total paved thickness is at least 0.15 foot and any layer is less than 0.15 foot.
2. If 3/4-inch aggregate grading is used and the specified total paved thickness is at least 0.20 foot and any layer is less than 0.20 foot.

The Engineer calculates QF_{QCi} for i = 1, 2, 3, and 4 using quality control data and QF_{QCi} for i = 5 using quality assurance data.

The Engineer stops production and terminates a lot if:

1. The lot's composite quality factor, QF_C, or an individual quality factor, QF_{QCi} for i = 3, 4, or 5, is below 0.90 determined under Section 39-4.03F, "Statistical Evaluation"
2. An individual quality factor, QF_{QCi} for i = 1 or 2, is below 0.75
3. Quality characteristics for which a quality factor, QF_{QCi}, is not determined has 2 consecutive acceptance or quality control tests not in compliance with the specifications

For any single quality characteristic for which a quality factor, QF_{QCi}, is not determined, except smoothness, if 2 consecutive acceptance test results do not comply with specifications:

1. Stop production.
2. Take corrective action.
3. In the Engineer's presence, take samples and split each sample into 4 parts. Test 1 part for compliance with the specifications and submit 3 parts to the Engineer. The Engineer tests 1 part for compliance with the specifications and reserves and stores 2 parts.
4. Demonstrate compliance with the specifications before resuming production and placement on the State highway.

39-4.05B Statistical Evaluation, Determination Of Quality Factors And Acceptance

Statistical Evaluation and Determination of Quality Factors

To determine the individual quality factor, $QF_{QCi,}$ for any quality factor i = 1 through 5 or a lot's composite quality factor, QF_C, for acceptance and payment adjustment, the Engineer uses the evaluation specifications under Section 39-4.03F, "Statistical Evaluation," and:

1. Verified quality control test results for aggregate gradation
2. Verified quality control test results for asphalt binder content
3. The Engineer's test results for percent of maximum theoretical density

Lot Acceptance Based on Quality Factors

The Engineer accepts a lot based on the quality factors determined for aggregate gradation and asphalt binder content, QF_{QCi} for i = 1 through 4, using the total number of verified quality control test result values and the total percent defective ($P_U + P_L$).

The Engineer accepts a lot based on the quality factor determined for maximum theoretical density, QF_{QC5}, using the total number of test result values from density cores and the total percent defective ($P_U + P_L$).

The Engineer calculates the quality factor for the lot, QF_C, which is a composite of weighted individual quality factors, QF_{QCi}, determined for each quality characteristic in the HMA Acceptance – QC / QA table in Section 39-4.05A, "Testing."

The Engineer accepts a lot based on quality factors if:

1. The current composite quality factor, QF_C, is 0.90 or greater
2. Each individual quality factor, QF_{QCi} for i = 3, 4, and 5, is 0.90 or greater
3. Each individual quality factor, QF_{QCi} for i = 1 and 2, is 0.75 or greater

No single quality characteristic test may represent more than the smaller of 750 tons or 1 day's production.

Payment Adjustment

If a lot is accepted, the Engineer adjusts payment with the following formula:

$$PA = \sum_{i=1}^{n} HMACP * wi * \left[QFQCi * (HMATT - WHMATTi) + WHMATTi\right] - (HMACP * HMATT)$$

where:

PA = Payment adjustment rounded to 2 decimal places.

$HMACP =$	HMA contract price.
$HMATT =$	HMA total tons represented in the lot.
$WHMATT_i =$	Total tons of waived quality characteristic HMA.
$QF_{QCi} =$	Running quality factor for the individual quality characteristic. QF_{QCi} for i = 1 through 4 must be from verified Contractor's QC results. QF_{QC5} must be determined from the Engineer's results on density cores taken for percent of maximum theoretical density determination.
$w =$	Weighting factor listed in the HMA acceptance table.
$i =$	Quality characteristic index number in the HMA acceptance table.

If the payment adjustment is a negative value, the Engineer deducts this amount from payment. If the payment adjustment is a positive value, the Engineer adds this amount to payment.

The 21st sublot becomes the 1st sublot (n = 1) in the next lot. When the 21st sequential sublot becomes the 1st sublot, the previous 20 sequential sublots become a lot for which the Engineer determines a quality factor. The Engineer uses this quality factor to pay for the HMA in the lot. If the next lot consists of less than 8 sublots, these sublots must be added to the previous lot for quality factor determination using 21 to 27 sublots.

39-4.05C Dispute Resolution

For a lot, if you or the Engineer dispute any quality factor, QF_{QCi}, or verification test result, every sublot in that lot must be retested.

Referee tests must be performed under the specifications for acceptance testing.

Any quality factor, QF_{QCi}, must be determined using the referee tests.

For any quality factor, QF_{QCi}, for i = 1 through 5, dispute resolution:

1. If the difference between the quality factors for QF_{QCi} using the referee test result and the disputed test result is less than or equal to 0.01, the original test result is correct.
2. If the difference between the quality factor for QF_{QCi} using the referee test result and the disputed test result is more than 0.01, the quality factor determined from the referee tests supersedes the previously determined quality factor.

39-5 MEASUREMENT AND PAYMENT

39-5.01 MEASUREMENT

The contract item for HMA is measured by weight. The weight of each HMA mixture designated in the Engineer's Estimate must be the combined mixture weight.

If tack coat, asphalt binder, and asphaltic emulsion are paid with separate contract items, their contract items are measured under Section 92, "Asphalts," or Section 94, "Asphaltic Emulsions," as the case may be.

If recorded batch weights are printed automatically, the contract item for HMA is measured by using the printed batch weights, provided:

1. Total aggregate and supplemental fine aggregate weight per batch is printed. If supplemental fine aggregate is weighed cumulatively with the aggregate, the total aggregate batch weight must include the supplemental fine aggregate weight.
2. Total asphalt binder weight per batch is printed.

3. Each truckload's zero tolerance weight is printed before weighing the first batch and after weighing the last batch.
4. Time, date, mix number, load number and truck identification is correlated with a load slip.
5. A copy of the recorded batch weights is certified by a licensed weighmaster and submitted to the Engineer.

The contract item for placing HMA dike is measured by the linear foot along the completed length. The contract item for placing HMA in miscellaneous areas is measured as the in-place compacted area in square yards. In addition to the quantities measured on a linear foot or square yard basis, the HMA for dike and miscellaneous areas are measured by weight.

The contract item for geosynthetic pavement interlayer is measured by the square yard for the actual pavement area covered.

39-5.02 PAYMENT

The contract prices paid per ton for hot mix asphalt as designated in the Engineer's Estimate include full compensation for furnishing all labor, materials, tools, equipment, and incidentals for doing all the work involved in constructing hot mix asphalt, complete in place, as shown on the plans, as specified in these specifications and the special provisions, and as directed by the Engineer.

If HMA is specified to comply with Section 39-4, "Quality Control / Quality Assurance," the Engineer adjusts payment under that section.

Full compensation for the Quality Control Plan and prepaving conference is included in the contract prices paid per ton for hot mix asphalt as designated in the Engineer's Estimate and no additional compensation will be allowed therefor.

Full compensation for performing and submitting mix designs and for Contractor sampling, testing, inspection, testing facilities, and preparation and submittal of results is included in the contract prices paid per ton for HMA as designated in the Engineer's Estimate and no additional compensation will be allowed therefor.

Full compensation for reclaimed asphalt pavement is included in the contract prices paid per ton for HMA as designated in the Engineer's Estimate and no additional compensation will be allowed therefor.

The contract price paid per ton for hot mix asphalt (leveling) includes full compensation for furnishing all labor, materials, tools, equipment, and incidentals for doing all the work involved in hot mix asphalt (leveling), complete in place, as shown on the plans, as specified in these specifications and the special provisions, and as directed by the Engineer.

The State pays for HMA dike at the contract price per linear foot for place HMA dike and by the ton for HMA. The contract prices paid per linear foot for place hot mix asphalt dike as designated in the Engineer's Estimate include full compensation for furnishing all labor, tools, equipment, and incidentals, and for doing all the work involved in placing HMA dike, complete in place, including excavation, backfill, and preparation of the area to receive the dike, as shown on the plans, as specified in these specifications and the special provisions, and as directed by the Engineer.

The State pays for HMA specified to be a miscellaneous area at the contract price per square yard for place hot mix asphalt (miscellaneous area) and per ton for hot mix asphalt. The contract price paid per square yard for place hot mix asphalt (miscellaneous area) includes full compensation for furnishing all labor, tools, equipment, and incidentals, and for doing all the work involved in placing HMA (miscellaneous area) complete in place, including excavation,

backfill, and preparation of the area to receive HMA (miscellaneous area), as shown on the plans, as specified in these specifications and the special provisions, and as directed by the Engineer.

If the Quality Control / Quality Assurance construction process is specified, HMA placed in dikes and miscellaneous areas is paid for at the contract price per ton for hot mix asphalt under Section 39-4, "Quality Control / Quality Assurance." Section 39-4.05B, "Statistical Evaluation, Determination of Quality Factors and Acceptance," does not apply to HMA placed in dikes and miscellaneous areas.

If there are no contract items for place hot mix asphalt dike and place hot mix asphalt (miscellaneous area) and the work is specified, full compensation for constructing HMA dikes and HMA (miscellaneous areas) including excavation, backfill, and preparation of the area to receive HMA dike or HMA (miscellaneous area) is included in the contract price paid per ton for the hot mix asphalt designated in the Engineer's Estimate and no separate payment will be made therefor.

The contract price paid per square yard for geosynthetic pavement interlayer of the type shown on the verified Bid Item List includes full compensation for furnishing all labor, materials, tools, equipment, and incidentals, and for doing all the work involved in placing geosynthetic pavement interlayer, complete in place, as shown on the plans, as specified in these specifications and the special provisions, and as directed by the Engineer.

The contract price paid per ton for paving asphalt (binder, geosynthetic pavement interlayer) includes full compensation for furnishing all labor, materials, tools, equipment, and incidentals, and for doing all the work involved in applying paving asphalt (binder, geosynthetic pavement interlayer), complete in place, including spreading sand to cover exposed binder material, as shown on the plans, as specified in these specifications and the special provisions, and as directed by the Engineer.

Full compensation for small quantities of HMA placed on geosynthetic pavement interlayer to prevent displacement during construction is included in the contract price paid per ton for the HMA being paved over the interlayer and no separate payment will be made therefor.

The contract price paid per ton for tack coat includes full compensation for furnishing all labor, materials, tools, equipment, and incidentals, and for doing all the work involved in applying tack coat, complete in place, as shown on the plans, as specified in these specifications and the special provisions, and as directed by the Engineer.

The Engineer does not adjust payment for increases or decreases in the quantities for tack coat, regardless of the reason for the increase or decrease. Section 4-1.03B, "Increased or Decreased Quantities," does not apply to the items for tack coat.

Full compensation for performing smoothness testing, submitting written and electronic copies of tests, and performing corrective work including applying fog seal coat is included in the contract price paid per ton for the HMA designated in the Engineer's Estimate and no separate payment will be made therefor.

Full compensation for spreading sand on RHMA-G, RHMA-O, and RHMA-O-HB surfaces and for sweeping and removing excess sand is included in the contract price paid per ton for rubberized hot mix asphalt as designated in the Engineer's Estimate and no separate payment will be made therefor.

If the dispute resolution ITP determines the Engineer's test results are correct, the Engineer deducts the ITP's testing costs from payments. If the ITP determines your test results are correct, the State pays the ITP's testing costs. If, in the Engineer's opinion, work completion is delayed because of incorrect Engineer test results, the Department makes payment and time adjustments under Section 8-1.09, "Delays."

SECTION 56 SIGNS
(Issued 07-20-12)

In Section 56-2.03 replace the 4th paragraph with:

Backfill material for metal posts shall consist of minor concrete conforming to the provisions in Section 90-10, "Minor Concrete," and shall contain not less than 463 pounds of cementitious material per cubic yard.

SECTION 73 CONCRETE CURBS AND SIDEWALKS
(Issued 06-05-09)

In Section 73-1.01 in the 2nd paragraph, replace item 2 with:

2. Minor concrete shall contain not less than 463 pounds of cementitious material per cubic yard except that when extruded or slip-formed curbs are constructed using 3/8-inch maximum size aggregate, minor concrete shall contain not less than 505 pounds of cementitious material per cubic yard.

In Section 73-1.06 replace the 15th paragraph with:

Where hot mix asphalt or portland cement concrete pavements are to be placed around or adjacent to manholes, pipe inlets or other miscellaneous structures in sidewalk, gutter depression, island paving, curb ramps or driveway areas, the structures shall not be constructed to final grade until after the pavements have been constructed for a reasonable distance on each side of the structures.

86-5 DETECTORS

86-5.01 VEHICLE DETECTORS

Sensor unit and isolator must comply with TEES.

86-5.01A Inductive Loop Detectors

86-5.01A(1) General

Inductive loop detector includes a completely installed loop or group of loops, in the roadway, lead-in cable, and a sensor unit, with power supply installed in a controller cabinet.

86-5.01A(2) (Blank)

86-5.01A(3) Construction Materials

Conductor for each inductive loop detector must be continuous, unspliced, and one of the following:

Conductor Options for Inductive Loop Detector

Option	Specifications
Type 1 loop wire	Type RHW-USE neoprene-jacketed or Type USE cross-linked polyethylene insulated, No. 12, stranded copper wire with a 40 mils minimum thickness at any point.
Type 2 loop wire	Type THWN or Type XHHW, No. 14, stranded copper wire in a plastic tubing. Plastic tubing must be polyethylene or vinyl, rated for use at 105 °C, and resistant to oil and gasoline. Outside diameter of tubing must be 0.27 inch maximum with a wall thickness of 0.028 inch minimum.

Conductor for loop detector lead-in cable must be two No. 16, 19 x 29, stranded, tinned copper wires, comply with the calculated cross sectional area of ASTM B 286, Table 1, and be one of the following:

Conductor Options for Loop Detector Lead-In Cable

Option	Specifications
Type B lead-in cable	Insulated with 20 mils of high-density polyethylene. Conductors must be twisted together with at least 2 turns per foot and the twisted pair must be protected with a copper or aluminum polyester shield. A No. 20, minimum, copper drain wire must be connected to equipment ground within cabinet. Cable must have a high-density polyethylene or high-density polypropylene outer jacket with a nominal thickness of 32 mils. Include an amorphous interior moisture penetration barrier of nonhydroscopic polyethylene or polypropylene fillers.
Type C lead-in cable	Comply with International Municipal Signal Association (IMSA) Specification No. 50-2. A No. 20, minimum, copper drain wire must be connected to equipment ground within cabinet.

86-5.01A(4) Installation Details

Install loop conductors without splices and end in nearest pull box. Seal open end of cable jacket or tubing similar to splicing requirements to prevent water from entering. Do not make final splices between loops and lead-in cable until loop operations under actual traffic conditions is approved.

Splice all loop conductors for each direction of travel for same phase of a traffic signal system, in same pull box, to a detector lead-in cable that runs from pull box adjacent to loop detector to a sensor unit mounted in controller cabinet.

End all loop conductors in a pull box or terminal strip in the cabinet.

Identify and band conductors for inductive loop installations. Band, in pairs, by lane, in the pull box adjacent to the loops and near the end of conductors in the cabinet. Bands must comply with Section 86-2.09, "Wiring."

If HMA surfacing is to be placed, install loop conductors before placing uppermost layer of HMA. Install conductors in compacted layer of HMA immediately below the uppermost layer. Install conductors as shown on the plans, except fill slot with sealant flush to the surface.

When cutting loops:

1. Residue from slot cutting activities must not be allowed to flow across shoulders or lanes occupied by public traffic and must be removed from the pavement surface before residue flows off. Dispose of residue from slot cutting activities under Section 7-1.13, "Disposal of Materials Outside the Highway Right of Way."
2. Surplus sealant must be removed from adjacent road surface without using solvents before setting.

Sealant for filling slots must comply with one of the following:

Elastomeric Sealant

Polyurethane material that will, within stated shelf life, cure only in the presence of moisture. Sealant must be suitable for use in both HMA and PCC.

The cured sealant must have the following performance characteristics:

Performance Characteristics of Cured Sealant

Specification	ASTM	Requirement
Hardness (indentation) at 25 °C and 50% relative humidity. (Type A, Model 1700 only)	D 2240 Rex.	65-85
Tensile Strength: Pulled at 508 mm per minute	D 412 Die C	3.45 MPa, min.
Elongation: Pulled at 508 mm per minute	D 412 Die C	400%, min.
Flex at -40 °C: 0.6-mm free film bend (180°) over 13-mm mandrel	--	No cracks
Weathering Resistance: Weatherometer 350 h, cured 7 days at 25 °C @ 50% relative humidity	D 822	Slight chalking
Salt Spray Resistance: 28 days at 38 °C with 5% NaCl, Die C & pulled at 508 mm per minute	B 117	3.45 MPa, min. tensile 400%, min. elongation
Dielectric Constant over a temperature range of -30 °C to 50 °C	D 150	Less than 25% change

Asphaltic Emulsion Sealant

Comply with State Specification 8040-41A-15. Use for filling slots in HMA pavement that are a maximum of 5/8 inch in width. Do not use where the slope causes the material to run from the slot. Material must not be thinned beyond manufacturer's recommendations. Place material when air temperature is at least 7 °C.

Hot-Melt Rubberized Asphalt Sealant

Hot-melt rubberized asphalt must be:

1. In solid form at room temperature and fluid at application temperature of 190 °C to 205 °C. Fumes must be non-toxic.
2. Suitable for use in both HMA and PCC.
3. Melted in a jacketed, double-boiler type melting unit. Temperature of heat transfer medium must not exceed 245 °C.
4. Applied with a pressure feed applicator or pour pot, when the pavement surface temperature is greater than 4 °C.
5. Packaged in containers clearly marked "Detector Loop Sealant" and specifying manufacturer's batch and lot number.

The cured sealant must have the following performance characteristics:

Performance Characteristics of Cured Sealant

Specification	ASTM	Requirement
Cone Penetration, 25 °C, 150 g, 5 s	D 5329, Sec. 6	3.5 mm, max
Flow, 60 °C	D 5329, Sec. 8	5 mm, max
Resilience, 25 °C	D 5329, Sec. 12	25%, min
Softening Point	D 36	82 °C, min
Ductility, 25 °C, 50 mm/min	D 113	300 mm, min
Flash Point, COC, °C	D 92	288 °C, min
Viscosity, Brookfield Thermosel, No. 27 Spindle, 20 rpm, 190 °C	D 150	Less than 25% change

86-5.01B Magnetic Detectors

Cable from pull box, adjacent to magnetic detector sensing element, to the field terminals in the controller cabinet must be the type specified for inductive loop detectors.

86-5.02 PEDESTRIAN PUSH BUTTON ASSEMBLIES

Housing must be either die-cast or permanent mold-cast aluminum, or ultraviolet stabilized, self-extinguishing structural plastic, if specified. Plastic housing must be black matching Color No. 17038, 27038 or 37038 of Federal Standard 595B, and colored throughout. Assembly must be rainproof and shockproof in any weather condition.

Switch must be a single-pole, double-throw, switching unit, with screw type terminals, rated 15 A at 125 V(ac), and must have:

1. Plunger actuator and a U frame to allow recessed mounting in push button housing
2. Operating force of 3.5 pounds
3. 1/64-inch maximum pretravel
4. 7/32-inch minimum overtravel
5. 0.0004- to 0.002-inch differential travel
6. 2-inch minimum diameter actuator

Where pedestrian push button is attached to a pole, shape housing to fit the pole curvature and secure. Include saddles to make a neat fit if needed.

Where a pedestrian push button is mounted on top of a 2-1/2-inch diameter post, fit housing with a slip-fitter and use screws for securing rigidly to post.

Pedestrian push button signs must be porcelain enameled metal or structural plastic.

Install push button and sign on crosswalk side of pole.

Point arrows on push button signs in the same direction as the corresponding crosswalk.

Attach sign on Type B push button assembly.

For Type C pedestrian push button assembly, mount instruction sign on the same standard as the push button assembly, using 2 straps and saddle brackets. Straps and saddle brackets must be corrosion-resisting chromium nickel steel and comply with ASTM A 167, Type 302B. Theft-proof bolts must be stainless steel with a chromium content of at least 17 percent and a nickel content of at least 8 percent.

SECTION 12

ENVIRONMENTAL PERMIT SUMMARY FORM

THIS PAGE LEFT BLANK INTENTIONALLY

SAN LUIS OBISPO COUNTY
DEPARTMENT OF PUBLIC WORKS
Paavo Ogren, Director

County Government Center, Room 206 • San Luis Obispo CA 93408 • (805) 781-5252
Fax (805) 781-1229 email address: pwd@co.slo.ca.us

ENVIRONMENTAL PERMIT SUMMARY FORM

Date: April 2, 2014

To: Don Spagnolo, Project Manager

From: John Farhar, Environmental Programs Division

Subject: **Environmental Review & Permit Status for the** South Bay Blvd Asphalt Overlay Project ED 13-181(WBS 300504)

The environmental review and regulatory permit processes for the above referenced project are complete. The following is a summary of the environmental requirements for the project:

Permit	Status	Attachments
CEQA Review	CE Class 1(c) filed 3/20/2014	Y
NEPA Review	n/a	
Coastal Permit	CDP exempt memo dated 3/31/2014	Y
CZMA	n/a	
CDFW	n/a	
USACOE 404	n/a	
NMFS ESA	n/a	
USFWS ESA	n/a	
RWQCB 401	n/a	
NPDES	n/a	

Summary Project Timeframe
Based on the below work windows, the basic work window for this project is from: **no window identified.**

******* A COPY OF THIS PERMIT SUMMARY FORM AND ALL OF ITS ATTACHMENTS MUST BE ON THE WORK SITE WHEN ANY WORK IS UNDERWAY**

Measure #	**Special Environmental Conditions**	**Responsibility: Contractor, County or Both**
	Pre-Construction	
1	Please notify the Environmental Programs Manager if the project description changes.	County
	During Construction	
2	A qualified monitor must be present to survey for Morro Shoulderband Snails (MSS) prior to disturbing any potential habitat (iceplant creeping onto pavement). If MSS are found work must cease and that area will be avoided.	County
	Post-Construction	

******* A COPY OF THIS PERMIT SUMMARY FORM AND ALL OF ITS ATTACHMENTS MUST BE ON THE WORK SITE WHEN ANY WORK IS UNDERWAY**

SAN LUIS OBISPO COUNTY
DEPARTMENT OF PUBLIC WORKS
Paavo Ogren, Director
County Government Center, Room 207 • San Luis Obispo CA 93408 • (805) 781-5252
Fax (805) 781-1229 email address: pwd@co.slo.ca.us

Memorandum

Date: March 20, 2014

To: Nancy Orton, Division Manager

From: John Farhar, Environmental Resource Specialist

Subject: Request for Coastal Permit Determination: 2014 Asphalt Overlay of South Bay Boulevard Project; ED13-181 (300504)

The purpose of this memorandum is to request your determination as to the need for a coastal permit for the above referenced project.

Project Description:
The Department of Public Works is proposing to grind and repave South Bay Boulevard from the intersection of Los Osos Valley Road and a point 300 feet north of Santa Ysabel Avenue in Los Osos.

The Project involves: 1) preparing the road surfaces by sweeping away any loose dust and debris, and 2) grinding the pavement between the edge of travel ways and repaving with hot mix asphalt, and 3) fog sealing the bike lane and existing dike between the edge of travel way and the edge of pavement, and 4) installing curb ramps at key intersection points. The repaving and fog sealing will help preserve the roadway and extend its useful life.

The Project will occur on existing paved roadways and improved surfaces, which have been highly disturbed by previously constructed improvements. No cultural resources are expected to be found or disturbed. The project vicinity has the potential for Morro Shoulderband Snails (MSS) to be present in areas of existing vegetation. For all locations where existing vegetation may be disturbed by project activities those areas will be surveyed by qualified County staff. If any MSS are found work in that area will be stopped and the area will be avoided. The Environmental Coordinator has determined that the project is categorically exempt pursuant to CEQA.

Project Location:
The project sites include areas of southern Cayucos near Old Creek Road within the Coastal Zone.

☒ The project described above is exempt from the land use permit requirements of Title 23 of the San Luis Obispo County Code for the following reason(s): 23.03.040 d(1) - repair & maintain existing roadway.

☐ The project described above is NOT exempt from the permit requirements of Title 23 of the San Luis Obispo County Code. Please forward a complete Coastal Development Permit application to us as soon as possible. No work can commence until a permit has been granted.

☐ This project also requires a Coastal Development Permit from the Coastal Commission.

Comments:

Signature

3/31/14
Date

NOTICE OF EXEMPTION

SAN LUIS OBISPO COUNTY DEPARTMENT OF PLANNING AND BUILDING
976 OSOS STREET • ROOM 200 • SAN LUIS OBISPO • CALIFORNIA 93408 • (805) 781-5600

Promoting the Wise Use of Land • Helping to Build Great Communities

(ENDORSED)
FILED
MAR 20 2014
JULIE L. RODEWALD COUNTY CLERK
BY Ilma Diaz
DEPUTY CLERK

2014 Asphalt Overlay South Bay Boulevard Project; ED13-181 (300504)
Project Title

Los Osos
Project Location - Specific

San Luis Obispo
Project Location – County

Prepare, grind and repave South Bay Boulevard from Los Osos Valley Road to a point 300 feet north of Santa Ysabel Avenue between the edge of travel lanes. Fog seal bike lanes and dike. Install curb ramps at key locations. The work will help preserve the existing pavement and increase its useful life.
Description of Nature, Purpose and Beneficiaries of Project

County of San Luis Obispo (see address above)
Name of Public Agency Approving Project

Department of Public Works, County Government Center Room 207, San Luis Obispo, CA 93408
Name of Person or Agency Carrying Out Project

Exempt Status: (Check One)

☐	Ministerial	{Sec. 21080(b)(1); 15268}
☐	Declared Emergency	{Sec. 21080(b)(3); 15269(a)}
☐	Emergency Project	{Sec. 21080(b)(4); 15269(b)(c)}
☒	Categorical Exemption.	{Sec. 15301; Class: (c) }
☐	Statutory Exemption	{Sec.____}

Reasons why project is exempt: Maintenance of existing public facilities that will involve no expansion of existing use and will not significantly affect any environmental resources

John Farhar — 805-781-5714
Lead Agency Contact Person — **Telephone**

If filed by applicant:
1. Attach certified document of exemption finding
2. Has a notice of exemption been filed by the public agency approving the project?
   Yes ☐ No ☐

Signature Ellen Carroll Date 3-17-14
Name (Print) Ellen Carroll Title Env. Coordinator

Authority cited: Sections 21083 and 21110, Public Resources Code.
Reference: Sections 21108, 21152, and 21152.1, Public Resources Code.

Date Received for filing at OPR: _____

SECTION 13. RULES GOVERNING BID PROTESTS AND OTHER CHALLENGES TO AWARDS OF CONSTRUCTION CONTRACTS

THIS PAGE LEFT BLANK INTENTIONALLY

COUNTY OF SAN LUIS OBISPO

Rules Governing Bid Protests And Other Challenges to Awards of Construction Contracts

The requirements set forth in these "Rules Governing Bid Protests And Other Challenges to Awards of Construction Contracts" ("Rules") are mandatory and are a Bidder's sole and exclusive remedy in the event a Bidder desires to challenge, protest or contest the award of any Construction Contract. A Bidder's failure to comply with these requirements shall constitute a waiver of any right to challenge, protest or contest the award of a Construction Contract in any subsequent proceeding, including but not limited to, the filing of a court action.

A Bidder may not rely upon another Bidder's compliance with the requirements of these Rules. Any Bidder that does not independently comply with the requirements set forth herein shall be deemed to have waived any right to challenge, protest or contest the award of a Construction Contract.

Nothing in these Rules affects the right of the County to reject all bids at any time prior to the award of a Construction Contract.

1.1 Definitions

1.1.1 Bidder - The contractor submitting a bid in response to a County solicitation for bids on a Construction Contract.

1.1.2 Protestor - A Bidder who files a Protest in accordance with the provisions of these Rules.

1.1.3 Board – Board of Supervisors of the County of San Luis Obispo (hereinafter, also "County")

1.1.4 Construction Contract - Any Construction Contract which is formally or informally advertised for bids in which the County of San Luis Obispo is, or will be, a party.

1.1.5 Protest – Any challenge, objection, or protest to the award of a Construction Contract to any Bidder.

1.1.6 Response – Any response to a Protest that is filed by an Interested Party in accordance with the provisions of these Rules.

1.1.7 Responsible Department - The County department, agency, or office responsible for the preparation of the bid documents for the Construction Contract and the administration of the Construction Contract.

1.1.8 Department Head - The person designated by the Board to be the head of the Responsible Department, or that person designated by the Department

Head to assume the powers, duties, and responsibilities conferred upon the Department Head under these Rules.

1.1.9 Initial Determination – A written notice by the Department Head that notifies a Bidder of the reasons why the Department Head believes that a bid is nonresponsive, or that a Bidder is not a responsible Bidder.

1.1.10 Interested Parties - For the purpose of these Rules, Interested Parties are defined as:

1.1.10.1 The Responsible Department and/or its Department Head.

1.1.10.2 Any Bidder that filed a Protest or whose bid is the subject of an Initial Determination.

1.1.10.3 Any Bidder whose eligibility for having the Construction Contract awarded to it as a responsible Bidder with the lowest responsive bid would be affected by the outcome of a Protest or Initial Determination.

1.2 Department Head's Independent Authority to Determine Bid Responsiveness and Bidder Responsibility.

1.2.1 Regardless of whether a Protest is submitted under these Rules, the Department Head is authorized to determine whether any bid is a responsive bid and whether any Bidder is a responsible Bidder. In the event the Department Head issues an Initial Determination, the Department Head shall provide the Interested Parties with written notice of the Initial Determination at least five (5) business days before the Department Head renders a final decision addressing the grounds stated in the Initial Determination A final decision of the Department Head under this section 1.2 shall be the final decision of the County with no provision for reconsideration or appeal to the Board.

1.2.2 The Department Head need not issue an Initial Determination in order to make a final decision on whether a bid is a responsive bid or a Bidder is a responsible Bidder. A final decision can also be issued by the Department Head through the processing of a Protest pursuant to the procedures set forth in these Rules.

1.2.3 The Department Head reserves the right to amend or withdraw an Initial Determination at any time before the Department Head renders a final decision addressing the grounds stated in the Initial Determination. When an Initial Determination is withdrawn, it shall have the same effect as if the Initial Determination had never been made.

1.3 Basis for Protest

1.3.1 Grounds for Protest – The grounds for a Protest may include any grounds a Protestor may have for contesting or challenging the award of a Construction Contract to any Bidder, including but not limited to the following grounds:

1.3.1.1 A Protestor objects to a Construction Contract being awarded to another Bidder on the grounds that the other Bidder's bid is nonresponsive.

1.3.1.2 A Protestor objects to a Construction Contract being awarded to another Bidder on the grounds that the other Bidder is not a responsible Bidder.

1.3.1.3 A Protestor objects to a Construction Contract being awarded to the Protestor on the grounds that the Protestor made a mistake in its bid that entitles the Protestor to be relieved of its bid under Public Contract Code Sections 5100 et seq

1.3.1.4 A Protestor objects to a Department Head's Initial Determination issued under section 1.2.1 above.

1.3.2 Required Form of Protest - All Protests shall be made in writing, containing the information listed below, and shall be filed with the Department Head . Protests shall contain the following information:

1.3.2.1 The name, address, telephone, facsimile numbers, and email address of the Protestor.

1.3.2.2 The signature of the Protestor or its representative.

1.3.2.3 The bid, solicitation and/or contract number.

1.3.2.4 The Protest must contain a complete statement of all grounds for the Protest, and must refer to the specific portion of the bid documents that are the basis of the Protest. The Protest must set forth all supporting facts and documentation. If Protester believes there are some facts relevant to its Protest that Protester cannot adequately present in writing, Protester must describe such facts in its Protest under the heading "Facts Requiring Oral Presentation", and state therein the reasons why the Bid Protester believes it cannot adequately present those facts through documentation.

1.3.2.5 All information establishing that the Protestor is a Bidder for the purpose of filing a Protest.

1.3.2.6 The form of relief requested.

1.4 <u>Protest Requirements and Procedure</u>

1.4.1 Standing to Protest - Protests shall be filed only by a Bidder.

1.4.2 Time for Filing a Protest

1.4.2.1 Except as provided in sections 1.4.2.2 and 1.4.2.3 below, all Protests must be submitted in writing to the Department Head before 5 p.m. PST of the fifth (5) business day following the date upon which the bids on the Construction Contract were opened.

1.4.2.2 When a Protestor objects to a Construction Contract being awarded to the Protester on the grounds that the Protestor made a mistake in its bid that entitles the Protestor to be relieved of its bid under Public Contract Code Sections 5100 et seq, the Protest must be submitted in writing to the Department Head before 5 p.m. PST of the fifth (5) business day following the date upon

which the bids on the Construction Contract were opened pursuant to Public Contract Code Section 5103.

1.4.2.3 When the Protestor objects to an Initial Determination made by the Department Head under section 1.2.1 above, the Protest must be submitted in writing to the Department Head before 5 p.m. PST of the fifth (5) business day following the date upon which the Initial Determination was first delivered to Protestor (either electronically or otherwise).

1.4.3 Written Responses of Interested Parties - If any Interested Party desires to respond to the Protest, the Response must be submitted in writing to the Department Head within five (5) business days of the date the Protest was first delivered to the Interested Party (either electronically or otherwise). If an Interested Party believes there are some facts relevant to its Response that the Interested Party cannot adequately present in writing, the Interested Party must describe such facts in its Response under the heading "Facts Requiring Oral Presentation", and state therein the reasons why the Interested Party believes it cannot adequately present those facts through documentation.

1.4.4 Proof of Transmittal - All Protests, Responses, and Replies shall include documentation evidencing that all Interested Parties were concurrently sent a complete copy of the respective Protest, Response or Reply in a manner that would provide all Interested Parties with a complete copy of the respective Protest, Response or Reply no later than one (1) business day after it was sent to the Department Head. The means of transmission chosen must also provide the sending party a means of verifying the date and time the copy was received by each Interested Party. Transmission by email may be an acceptable means of transmittal.

1.4.5 No Ex Parte or Unilateral Communications on the Merits of a Protest - No Bidder shall have any written communications regarding the merits of a Protest with the Responsible Department or its Department Head that are not concurrently sent to all of the other Interested Parties. No Bidder shall have any oral communications regarding the merits of a Protest with the Responsible Department or its Department Head other than during an oral presentation properly noticed by the Department Head under these Rules.

1.4.6 Suspension of Process for Proposed Rejection of all Bids - At any time during the processing of a Protest, the Department Head may elect to indefinitely suspend any further processing of the Protest by providing written notice to all Interested Parties that the Department Head intends to recommend to the Board that all bids be rejected. All time deadlines provided in these Rules shall be tolled during any such suspension period. If the Board decides to not reject all bids, or if the Department Head otherwise decides to lift the suspension, the requirements of these Rules shall be reactivated upon the Department Head providing all Interested Parties with written notice thereof.

1.5 <u>Summary Dismissal of Protest</u>

The Department Head may summarily dismiss a protest, or specific protest allegations, at any time that the Department Head determines that the Protest is untimely, frivolous, or without merit; is not submitted in the required form of Protest, as set forth above in section 1.3.2., "Required Form of Protest;" or is submitted by a non-Bidder. In such cases, a notice of summary dismissal will be furnished to the Interested Parties. Such a summary dismissal shall be the final decision of the County with no provision for reconsideration or appeal to the Board.

1.6 Decision by the Department Head Based on Written Submissions Only

In reaching a decision on the merits of a Protest, the Department Head may consider relevant documentation submitted by the Protestor and any other Interested Party. If the Department Head wishes to have additional information submitted that was not included in the Protest or in any documentation from other Interested Parties, the Department Head may make a request specifying the information sought and time for submittal. Submissions of additional information that have not been specifically requested by the Department Head may not be considered at the Department Head's sole discretion. If the Department Head does not provide an opportunity for an oral presentation under section 1.7 below, the Department Head will issue a written decision without any oral presentation. . The Department Head's decision shall be the final decision of the County with no provision for reconsideration or appeal to the Board.

1.7 Decision by the Department Head Following Oral Presentation

1.7.1 The Department Head may, at his or her discretion, elect to provide an opportunity for the Protestor and other Interested Parties to make an oral presentation to the Department Head regarding the Protest. In such event. oral presentations shall be conducted in accordance with the following procedure:

1.7.1.1 Notice of Oral Presentation - The Department Head will set a date, time, and place for an oral presentation. Written notice will be sent to Interested Parties not less than five (5) business days in advance of the oral presentation unless it is agreeable to all parties that an earlier date be established. Continuances may be granted by the Department Head for good cause.

1.7.1.2 Guidelines for Oral Presentation - Oral presentations are informal in nature and shall be made by the Protestor or its authorized representative. Technical rules of evidence shall not apply. The Department Head will determine how the oral presentations will be conducted and may set time limits for the presentation. The Department Head may question Interested Parties or provide an opportunity for Interested Parties to make an oral presentation. The Department Head may request additional documentation or information prior to, during or after the oral presentation. Unless

requested by the Department Head, additional documentation or information may not be accepted.

1.7.1.3 Record of Oral Presentation - Any Interested Party may request, and in the Department Head's sole discretion, the Department Head may allow recording of the presentation. If the Department Head allows the presentation to be recorded, the Interested Party requesting that the presentation be recorded must pay the cost of recording, including the costs to make and distribute copies of the recording to the Department Head and other Interested Parties. There shall be no cost to the County.

1.7.1.4 Decisions - The Department Head will issue a written decision within 30 calendar days of the oral presentation; however, the time for issuing the written decision may be extended by the Department Head. A copy of the decision will be furnished to the Interested Parties. The decision shall be the final decision of the County with no provision for reconsideration or appeal to the Board.

1.8 Effect on Contracts

The failure of a County employee or department to comply with the provisions stated in these Rules shall in no way affect the validity of any Construction Contract entered into by the County.

1.9 Department Head Decisions on Protests Seeking Relief from a Bidder's Mistake under Public Contract Code Section 5103.

When a Protestor objects to a Construction Contract being awarded to the Bid Protester on the grounds that the Protestor made a mistake in its bid that entitles the Protestor to be relieved of its bid under Public Contract Code Sections 5100 et seq, a final decision of the Department Head that relieves the Protestor of its bid on the grounds of mistake must be approved by the Board before it can become a final decision of the County. Any other final decision of the Department Head regarding a Protestor's request to be relieved of its bid on the grounds of mistake under Public Contract Code Sections 5100 et seq, shall be the final decision of the County with no provision for reconsideration or appeal to the Board.

APPENDIX A

CONSTRUCTION DETAILS

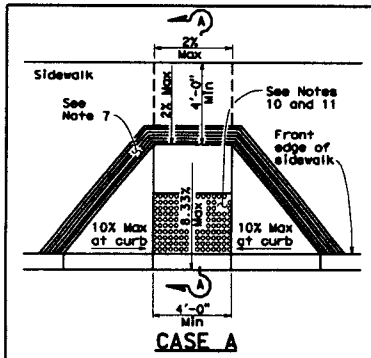

CASE A

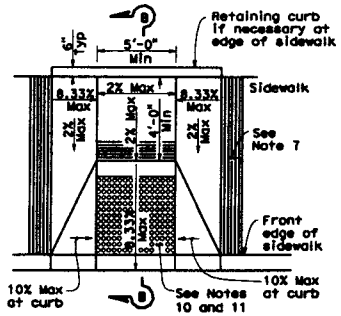

CASE B

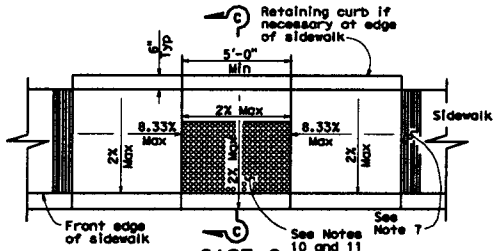

CASE C

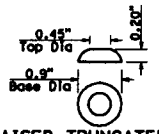

RAISED TRUNCATED DOME

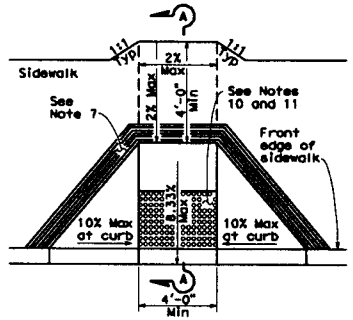

CASE D

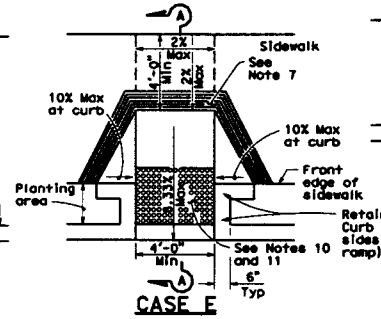

CASE E

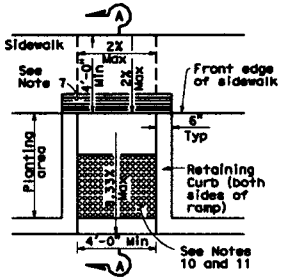

CASE F

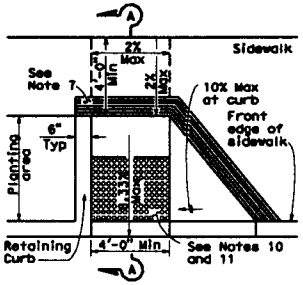

CASE G
See Note 4

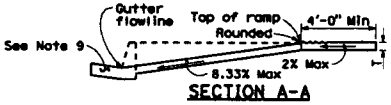

SECTION A-A

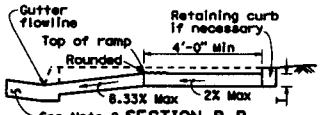

SECTION B-B
Depress entire sidewalk as required

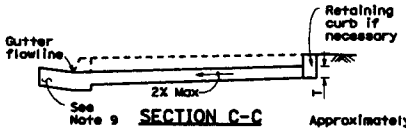

SECTION C-C

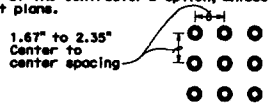

RAISED TRUNCATED DOME PATTERN (IN-LINE)

DETECTABLE WARNING SURFACE

See Note 10

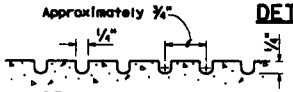

GROOVING DETAIL

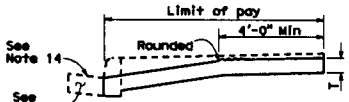

RETROFIT DETAIL
Existing curb and sidewalk

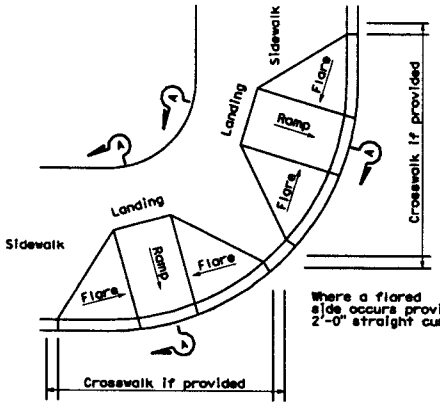

DETAIL A
TYPICAL TWO-RAMP CORNER INSTALLATION
See Note 1

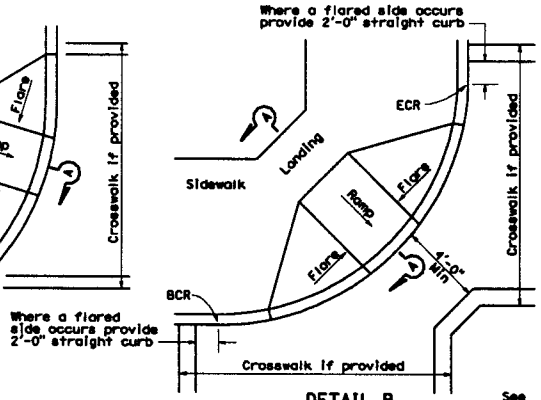

DETAIL B
TYPICAL ONE-RAMP CORNER INSTALLATION
See Notes 1 and 3

DIST	COUNTY	ROUTE	POST MILES TOTAL PROJECT	SHEET NO.	TOTAL SHEETS

REGISTERED CIVIL ENGINEER
September 1, 2006
PLANS APPROVAL DATE
Hector David Cardona C41957 3-31-08 CIVIL STATE OF CALIFORNIA REGISTERED PROFESSIONAL ENGINEER
The State of California or its officers or agents shall not be responsible for the accuracy or completeness of electronic copies of this plan sheet.

To accompany plans dated _____

NOTES:

1. As site conditions dictate, Case A through Case G curb ramps may be used for corner installations similar to those shown in Detail A and Detail B. The case of curb ramps used in Detail A do not have to be the same. Case A through Case G curb ramps also may be used at mid block locations, as site conditions dictate.
2. If distance from curb to back of sidewalk is too short to accommodate ramp and 4'-0" platform (landing) as shown in Case A, the sidewalk may be depressed longitudinally as in Case B, or C or may be widened as in Case D.
3. When ramp is located in center of curb return, crosswalk configuration must be similar to that shown for Detail B.
4. As site conditions dictate, the retaining curb side and the flared side of the Case G ramp shall be constructed in reversed position.
5. If located on a curve, the sides of the ramp need not be parallel, but the minimum width of the ramp shall be 4'-0".
6. Side slope of ramp flares vary uniformly from a maximum of 10% at curb to conform with longitudinal sidewalk slope adjacent to top of the ramp, except in Case C and Case F.
7. The curb ramp shall be outlined, as shown, with a 1'-0" wide border with 1/4" grooves approximately 3/4" on center. See grooving detail.
8. Transitions from ramps and landing to walks, gutters or streets shall be flush and free of abrupt changes.
9. Maximum slopes of adjoining gutters, the road surface immediately adjacent to the curb ramp or accessible route shall not exceed 5 percent within 4'-0" of the top and bottom of the curb ramp.
10. Curb ramps shall have a detectable warning surface that extends the full width and 3'-0" depth of the ramp. Detectable Warning Surfaces shall conform to the details on this plan and the requirements in the Special Provisions.
11. The edge of the detectable warning surface nearest the street shall be between 6" and 8" from the gutter flowline.
12. Sidewalk and ramp thickness, "T", shall be 3 1/2" minimum.
13. Utility pull boxes, manholes, vaults and all other utility facilities within the boundaries of the curb ramp will be relocated or adjusted to grade by the owner prior to, or in conjunction with, curb ramp construction.
14. For retrofit conditions, removal and replacement of curb apron will be at the Contractor's option, unless otherwise shown on project plans.

STATE OF CALIFORNIA
DEPARTMENT OF TRANSPORTATION

CURB RAMP DETAILS

NO SCALE

RSP A88A DATED SEPTEMBER 1, 2006 SUPERSEDES STANDARD PLAN A88A
DATED MAY 1, 2006 - PAGE 115 OF THE STANDARD PLANS BOOK DATED MAY 2006.

REVISED STANDARD PLAN RSP A88A

2006 REVISED STANDARD PLAN RSP A88A

DIST	COUNTY	ROUTE	POST MILES TOTAL PROJECT	SHEET NO.	TOTAL SHEETS

REGISTERED CIVIL ENGINEER

May 1, 2006
PLANS APPROVAL DATE

REGISTERED PROFESSIONAL ENGINEER Michael Janzen No. 44788 Exp. 03-31-08 Civil STATE OF CALIFORNIA

The State of California or its officers or agents shall not be responsible for the accuracy or completeness of electronic copies of this plan sheet.

To get to the Caltrans web site, go to: http://www.dot.ca.gov

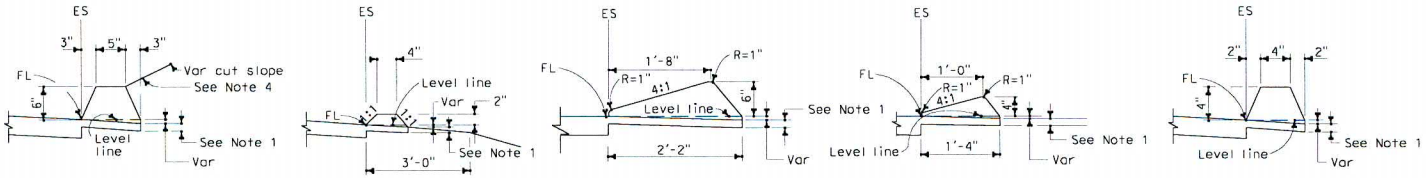

TYPE A
See Note 3

TYPE C

TYPE D

TYPE E

TYPE F
See Note 5

DIKES

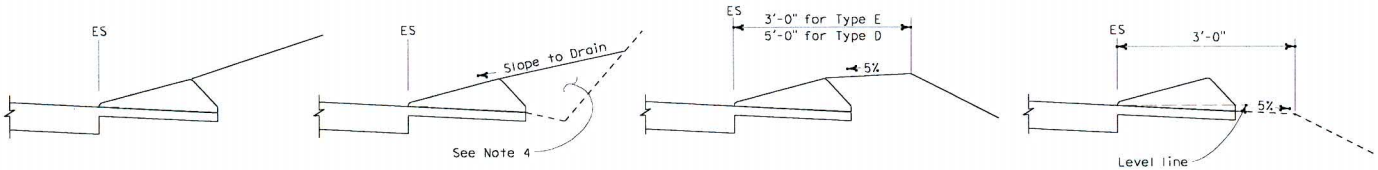

CASE C-1
Cut Slope

CASE C-2
Cut Slope

CASE F

CASE R
See Note 2

TYPE D AND E BACKFILL DETAILS

NOTES:

1. For AC shoulders only, extend top layer of AC placed on the shoulder under dike with no joint at the ES.
2. Case R applies to retrofit only projects where restrictive conditions do not provide enough width for Case F backfill.
3. Type A dike only to be used where restrictive slope conditions do not provide enough width to use Type D or Type E dike.
4. Fill and compact with excavated material to top of dike.
5. Use Type F dike, where dike is required with guard railing installations. See Standard Plan A77C4 for dike positioning details.

DIKE QUANTITIES

TYPE	CUBIC YARDS PER LINEAR FOOT
A	0.0135
C	0.0038
D	0.0293
E	0.0130
F	0.0066

Quantities based on 5% cross slope.

STATE OF CALIFORNIA
DEPARTMENT OF TRANSPORTATION

ASPHALT CONCRETE DIKES

NO SCALE

A87B

2006 STANDARD PLAN A87B

Revisions					
Description	Approved	Date	Description	Approved	Date

NOTES:

1. EXPANSION JOINTS (EJ) SHALL BE PLACED AT CURB RETURNS, DRIVEWAYS, STORM DRAIN CATCH BASINS, AROUND UTILITY POLES, AT LONGITUDINAL CURB GUTTER AND SIDEWALK INTERVALS NOT TO EXCEED 30-FEET, AND AT ALL OTHER LOCATIONS AS DIRECTED BY THE DEPARTMENT. THE INTERVALS BETWEEN EXPANSION JOINTS SHALL VARY TO ALLOW MATCHING OF JOINTS IN ADJACENT EXISTING IMPROVEMENTS AS APPLICABLE.
2. WEAKENED PLANE JOINTS (WPJ) SHALL BE A MINIMUM 1-INCH IN DEPTH AND PLACED AT LONGITUDINAL CURB GUTTER AND SIDEWALK INTERVALS NOT EXCEEDING 10-FEET BETWEEN EXPANSION JOINTS. THE INTERVALS BETWEEN WEAKENED PLANE JOINTS SHALL VARY TO ALLOW MATCHING OF JOINTS IN ADJACENT EXISTING IMPROVEMENTS AS APPLICABLE.
3. 1/2"Ø x 18" SMOOTH, GREASED DOWELS SHALL BE PLACED AT ALL EXPANSION JOINTS, ONE IN THE NEW CURB FACE, ONE IN THE NEW GUTTER, AND AT 18-INCHES ON CENTER IN NEW SIDEWALK.
4. WHEN PLACED IN SIDEWALKS, BOTH EXPANSION JOINTS AND WEAKENED PLANE JOINTS SHALL EXTEND THROUGH THE ADJACENT CURB AND GUTTER.
5. REFER TO RESPECTIVE IMPROVEMENT (CURB, GUTTER, SIDEWALK, RAMP, DRIVEWAY, ETC) STANDARD DRAWING FOR ADDITIONAL CONSTRUCTION INFORMATION.

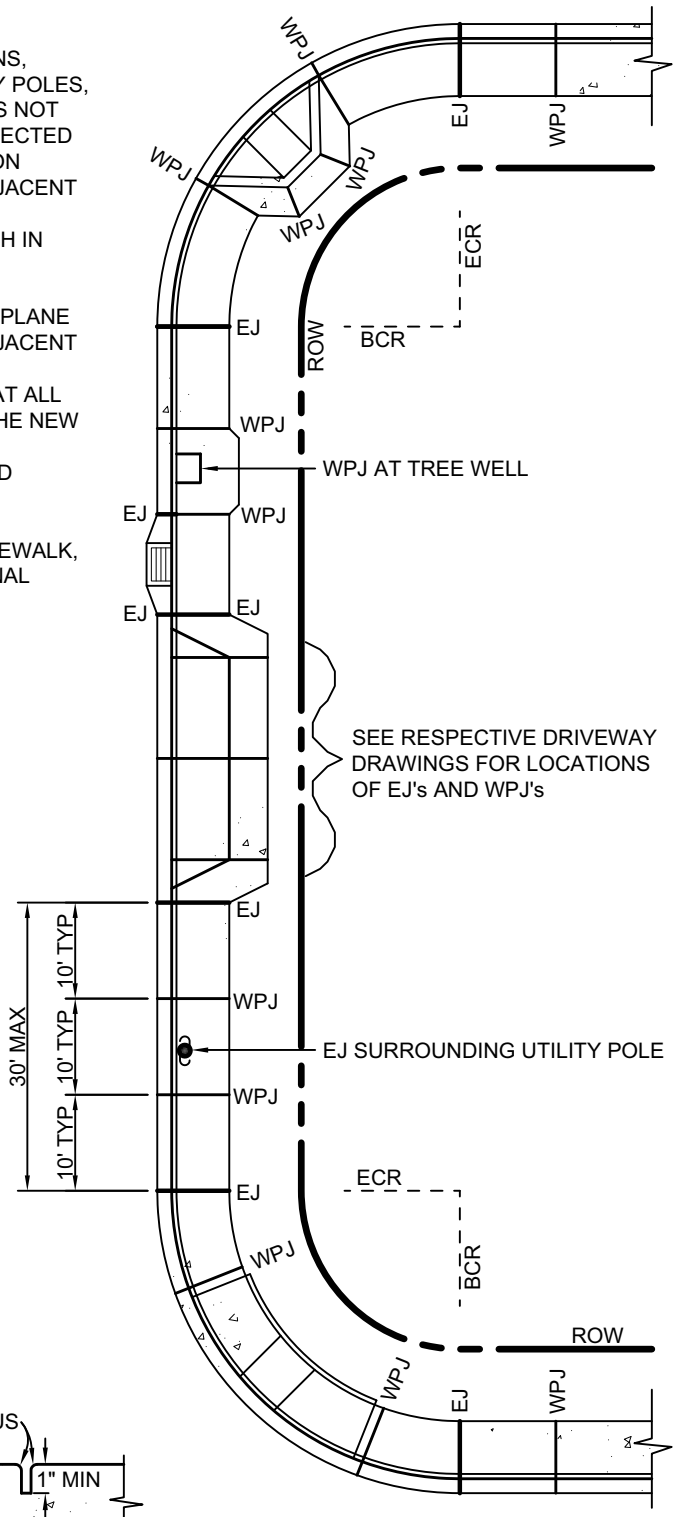

REFER TO DRAWING R-3 FOR REPAIR OF EXISTING SIDEWALKS

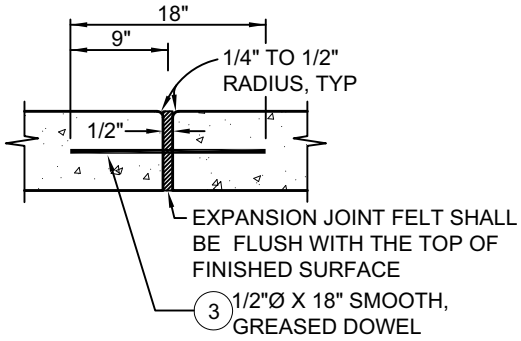

EXPANSION JOINT 1

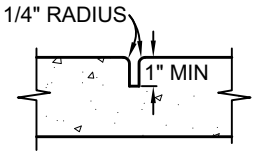

WEAKENED PLANE JOINT 2

DEPARTMENT OF PUBLIC WORKS & TRANSPORTATION

EXPANSION & WEAKENED PLANE JOINT REQUIREMENTS

Scale:	Adopted:
1"=20'	2011

Drawing No: C-1

Sheet No: 1 OF 1

Revisions					
Description	Approved	Date	Description	Approved	Date
NOTE 2	REM	NOV 07			
5% SLOPE IN ROAD AT BOTTOM OF RAMP	GDM	JAN 11			

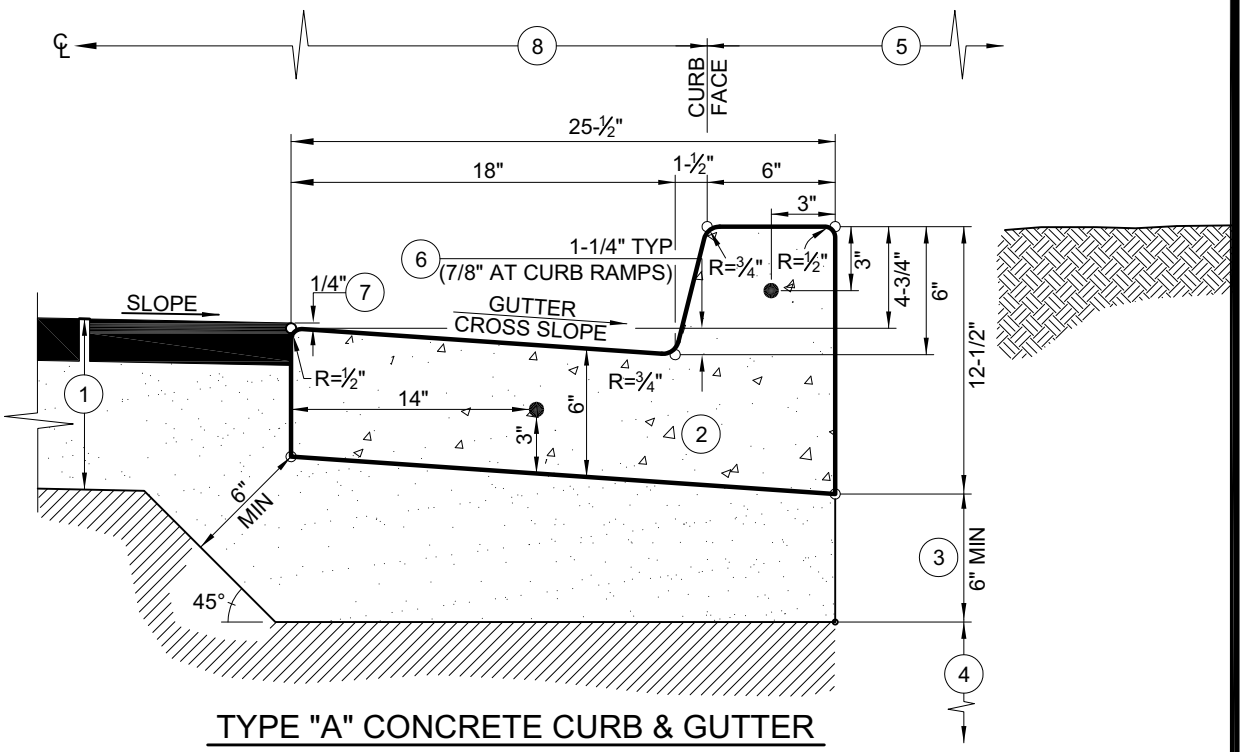

TYPE "A" CONCRETE CURB & GUTTER

NOTES:

1. ROADWAY STRUCTURAL SECTION PER PLAN OR AS EXISTING.
2. CONCRETE CURB SHALL CONFORM TO STATE STANDARD 90-1.01, 520 LBS CEMENTITIOUS MATERIAL PER CUBIC YARD [5-1/2 SACK]. EXTRUDED CURB SHALL CONFORM TO STATE STANDARD 73-1.01. CONCRETE CURING SHALL BE BY PIGMENTED CURING COMPOUND METHOD USING WHITE PIGMENT TYPE.
3. 6" MINIMUM CLASS II AGGREGATE BASE TO 95% RELATIVE COMPACTION OR MATCH BASE THICKNESS REQUIREMENT FOR NEW OR EXISTING ROAD SECTION, WHICHEVER IS GREATEST.
4. 12" MINIMUM SUBGRADE TO 95% RELATIVE COMPACTION.
5. SUBGRADE AND AGGREGATE BASE COMPACTION REQUIREMENTS SHALL EXTEND TO THE BACK OF CURB OR TO THE BACK OF ATTACHED SIDEWALK (WHICHEVER CONDITION IS APPLICABLE).
6. GUTTER CROSS SLOPE SHALL NOT EXCEED 5% ACROSS CURB RAMPS PER DETAIL BELOW.
7. THE ROADWAY FINISHED SURFACE SHALL BE 1/4" ABOVE THE GUTTER LIP.
8. PAVEMENT WIDTH MEASURED FROM ROAD CENTERLINE TO THIS POINT.
9. 1/2"Ø x 18" LONG GREASED SMOOTH DOWELS (●) SHALL BE CONSTRUCTED AT ALL EXPANSION JOINTS AND CONSTRUCTION JOINTS, REFER TO STANDARD DRAWING C-1.
10. EXPANSION JOINTS SHALL BE CONSTRUCTED AT 30-FEET MAXIMUM INTERVALS, AT ENDS OF ALL CURB RETURNS, AND EACH SIDE OF DRIVEWAY DEPRESSIONS PER STANDARD DRAWING C-1. THE INTERVALS BETWEEN EXPANSION JOINTS SHALL VARY TO ALLOW MATCHING OF JOINTS ADJACENT EXISTING IMPROVEMENTS WHEN APPLICABLE.
11. WEAKENED PLANE JOINTS SHALL BE CONSTRUCTED AT 10-FEET MAXIMUM INTERVALS PER STANDARD DRAWING C-1. THE INTERVALS BETWEEN EXPANSION JOINTS SHALL VARY TO ALLOW MATCHING OF JOINTS ADJACENT EXISTING IMPROVEMENTS WHEN APPLICABLE.
12. UNDER NO CIRCUMSTANCES SHALL UTILITY LIDS AND CONCRETE COLLARS BE LOCATED WITHIN THE CURB & GUTTER.

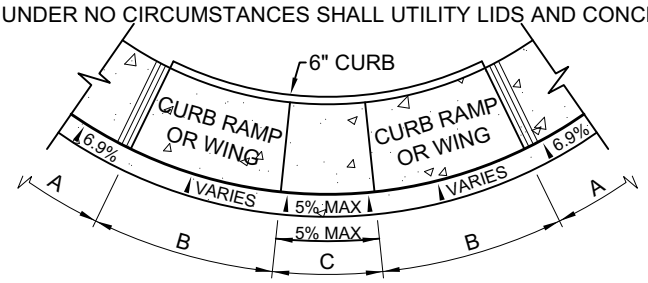

NOTES:

A. GUTTER CROSS SLOPE = 1-1/4" IN 18" = 6.9%
B. GUTTER CROSS SLOPE TRANSITION ZONE (VARIES)
C. GUTTER CROSS SLOPE = 7/8" IN 18" = 4.9% (5% MAX)
LONGITUDINAL SLOPE = 2% MAX

TYPICAL GUTTER TRANSITION AT CURB RAMP

DEPARTMENT OF PUBLIC WORKS & TRANSPORTATION

TYPE "A" CONCRETE CURB & GUTTER

Scale:	Adopted:
NTS	2011
Drawing No:	C-2
Sheet No:	1 OF 1

Revisions					
Description	Approved	Date	Description	Approved	Date
NOTE 6, REPLACE AC AND ASPHALT W/ HMA	GDM	JAN 11			

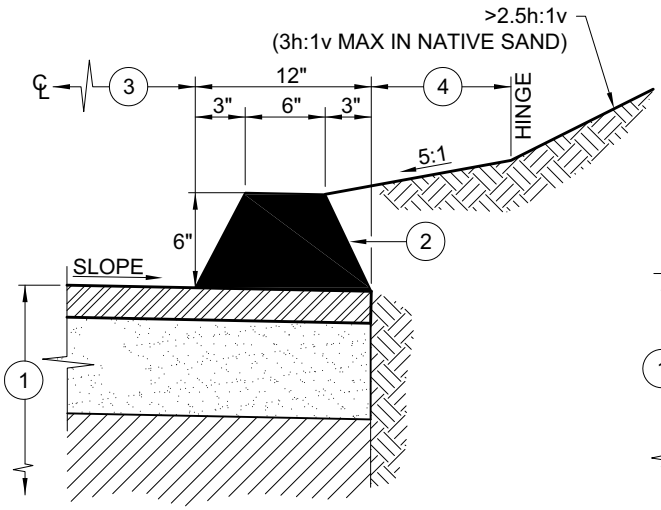

TYPE "A" HMA DIKE

FOR USE IN CUT CONDITIONS > 2.5:1

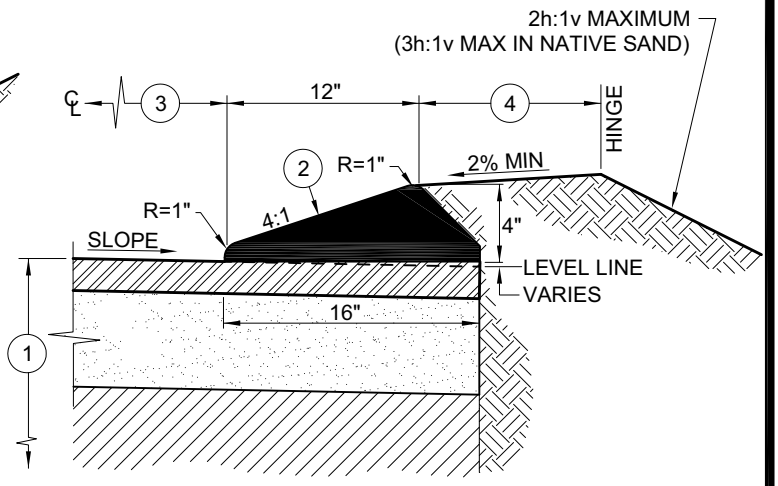

TYPE "E" MOUNTABLE HMA DIKE

FOR USE IN FLAT & FILL CONDITIONS

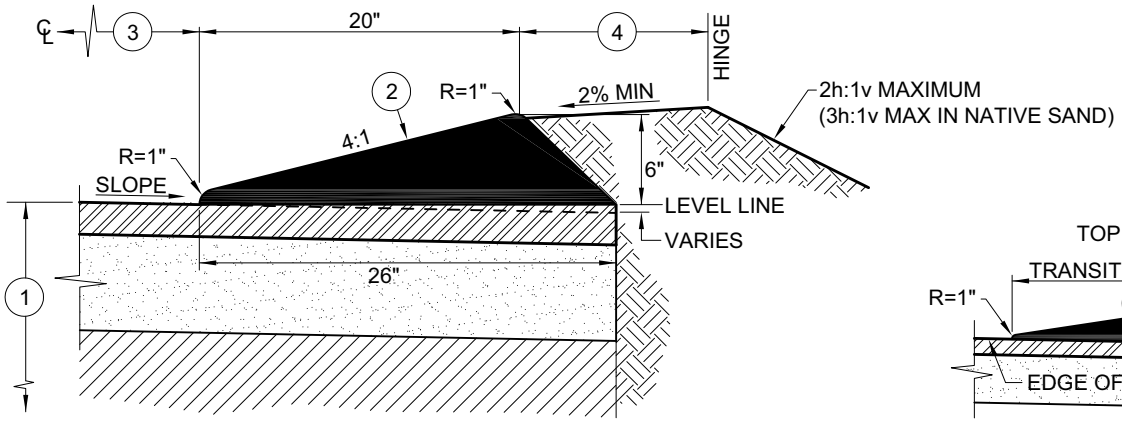

TYPE "D" MOUNTABLE HMA DIKE

FOR USE IN FLAT & FILL CONDITIONS (OPTIONAL)

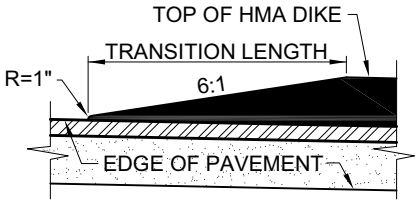

DIKE END TRANSITION 5

NOTES:

1. ROADWAY STRUCTURAL SECTION THICKNESS PER PLAN.
2. HOT MIX ASPHALT (HMA) DIKE SHALL BE REQUIRED PER THE DESIGN STANDARDS (REFER TO A-1 SERIES STANDARD DRAWINGS). USE PG 70-10 ASPHALT BINDER FOR ALL HMA DIKE.
3. ROADWAY TRAVEL PLUS SHOULDER WIDTH MEASURED FROM ROAD CENTERLINE TO THIS POINT.
4. REFER TO A-1 SERIES STANDARD DRAWINGS FOR MINIMUM DISTANCES TO HINGE POINT.
5. A 6h:1v DIKE HEIGHT TAPER SHALL BE PROVIDED AT EACH TERMINUS OF THE HMA DIKE.
6. HMA DIKE MAY BE REQUIRED BY THE DEPARTMENT WHERE NEEDED TO CONTROL DRAINAGE OR EROSION ON ROADWAYS HAVING LONGITUDINAL GRADES OF 3% OR GREATER. TYPE "D" OR "E" HMA DIKE SHALL NORMALLY BE USED IN ALL APPLICATIONS AND SHALL BE REQUIRED IN CONDITIONS WHERE THE ROADWAY IS ABOVE OR LEVEL WITH THE ADJACENT GRADE. TYPE "A" HMA DIKE SHALL BE USED ADJACENT TO CUT SLOPES STEEPER THAN 2.5:1 AND WHEN THE ROADWAY IS BELOW THE ADJACENT GRADE.
7. PRIOR TO PROJECT ACCEPTANCE, ALL DAMAGED HMA DIKE SHALL BE REMOVED AND REPLACED AND A FOG SEAL SHALL BE APPLIED TO BOTH THE REPLACED HMA DIKE AND TO THE REMAINING UNDAMAGED HMA DIKE TO THE LIMITS DETERMINED BY THE DEPARTMENT.

DEPARTMENT OF PUBLIC WORKS & TRANSPORTATION

HOT MIX ASPHALT (HMA) DIKES

Scale:	Adopted:
1"=1'	2011
Drawing No:	C-3
Sheet No:	1 OF 1

Revisions

Description	Approved	Date	Description	Approved	Date
NOTE 1, ADD NOTE 11, "TYPICAL" TO JOINT DETAIL, & LABEL "PARKWAY"	REM	NOV 07			
INCREASED DETACHED SIDEWALK WIDTH	GDM	JAN 11			

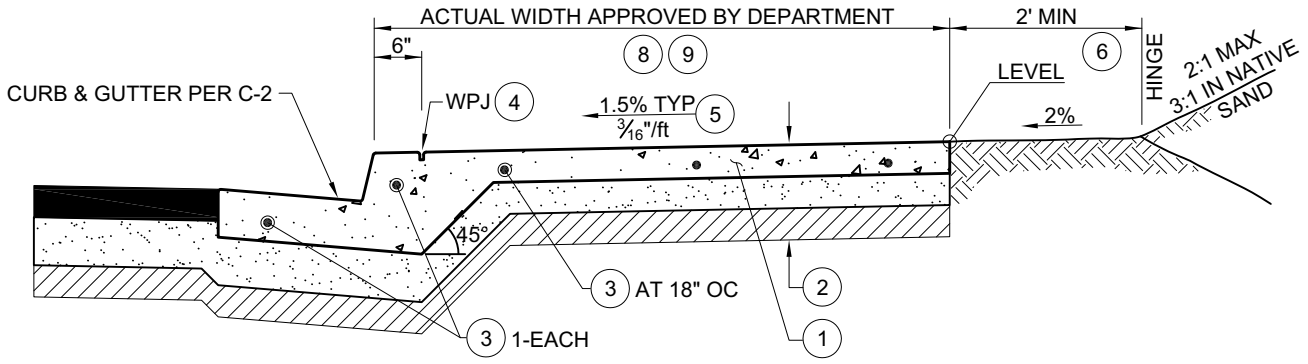

INTEGRAL SIDEWALK (MONOLITHIC)

(SEE OPTIONAL JOINT DETAIL)

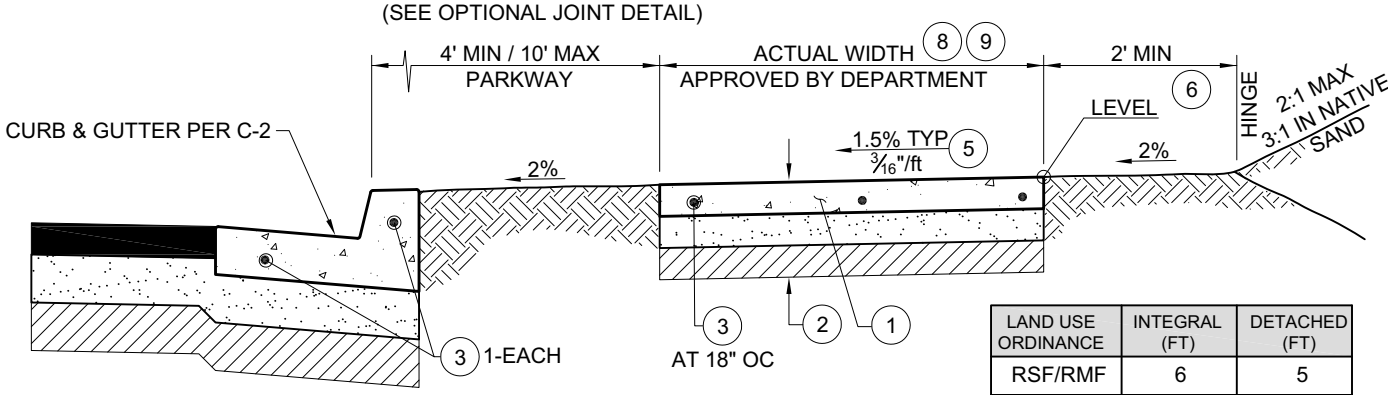

DETACHED OR MEANDERING SIDEWALK

LAND USE ORDINANCE	INTEGRAL (FT)	DETACHED (FT)
RSF/RMF	6	5
CR	10	6
CS	6	5
OP	8	5
IND	6	5

SIDEWALK WIDTH TABLE

NOTES:

1. CONCRETE SIDEWALK SHALL CONFORM TO STATE STANDARD 90-1.01, MINOR (520 LBS CEMENTITIOUS MATERIAL PER CUBIC YARD [5-1/2 SACK]). CONCRETE CURING SHALL BE BY PIGMENTED CURING COMPOUND METHOD USING WHITE PIGMENT TYPE.
2. TYPICAL SECTION SHALL BE:
   - 4-INCH MIN PCC (6-INCH OR 8-INCH WHEN WITHIN A DRIVEWAY), OVER
   - 4-INCH MIN CLASS II AGGREGATE BASE TO 95% RELATIVE COMPACTION, OVER
   - 12-INCH MIN SUBGRADE TO 95% RELATIVE COMPACTION

   IF THE R-VALUE OF THE NATIVE MATERIAL IS 55 OR GREATER THEN THE 4-INCH OF AGGREGATE BASE MAY BE SUBSTITUTED WITH COMPACTED NATIVE MATERIAL.
3. EXPANSION JOINTS (EJ) SHALL BE CONSTRUCTED AT LONGITUDINAL INTERVALS NOT EXCEEDING 30-FEET. 1/2"Ø x 18" SMOOTH, GREASED DOWELS SHALL BE PLACED IN THE EJ, ONE IN CURB FACE, ONE IN GUTTER, AND AT 18-INCHES ON CENTER IN SIDEWALKS PER STANDARD DRAWING C-1.
4. WEAKENED PLANE JOINTS (WPJ) SHALL BE CONSTRUCTED BETWEEN EXPANSION JOINTS AT LONGITUDINAL INTERVALS NOT EXCEEDING 10-FEET, AND AT 6-INCHES BEHIND THE CURB FACE FOR ATTACHED SIDEWALKS PER STANDARD DRAWING C-1.
5. THE CROSS SLOPE OF THE SIDEWALK SHALL NOT EXCEED 2% (1/4-INCH PER 12-INCHES), 1.5% (3/16-INCH PER 12-INCHES) IS RECOMMENDED.
6. THE 2-FOOT BENCH IS NOT REQUIRED FOR ADJOINING SLOPES OF 5h:1v OR FLATTER.
7. ALTHOUGH THE PROJECT CONDITIONS OF APPROVAL OR THE AREA SPECIFIC PLAN MAY REQUIRE AN ALTERNATIVE SIDEWALK CONFIGURATION, THE CONSTRUCTION SPECIFICATIONS OF THIS STANDARD SHALL APPLY.
8. THE SIDEWALK SHALL BE WIDENED WHERE REQUIRED TO ALLOW FOR A 4-FOOT CLEAR PASSAGE AROUND ALL ABOVE GRADE OBSTACLES LOCATED WITHIN THE SIDEWALK.
9. WATER PURVEYOR METER BOXES ARE ALLOWED WITHIN THE SIDEWALK PROVIDED THAT ALL LIDS AND LIDS WITH A.M.R. SYSTEMS ARE SET FLUSH WITH THE SIDEWALK.
10. ALL UTILITY VAULTS AND LIDS MUST BE LOCATED OUTSIDE OF THE SIDEWALK OR HAVE PRIOR DEPARTMENT APPROVAL FOR LOCATION WITHIN THE SIDEWALK. UTILITY LIDS WITHIN THE SIDEWALK SHALL HAVE A NON-SLIP SURFACE.
11. SEE DRAWING M-5 FOR TREE PLANTING REQUIREMENTS WITHIN RIGHT-OF-WAY.

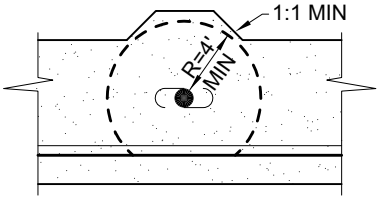

SIDEWALK SHALL BE WIDENED BEHIND ALL ABOVE GRADE OBSTACLES TO PROVIDE A 4-FEET MINIMUM CLEARANCE.

8 SIDEWALK WIDENING DETAIL

NTS

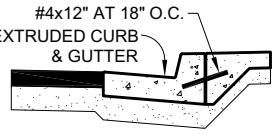

WHEN EXTRUDED CURB & GUTTER IS USED AND SIDEWALK PORTION IS NOT PLACED WITHIN 1-HOUR THEN REBAR SHALL BE PLACED PER THIS JOINT DETAIL.

TYPICAL JOINT DETAIL

NTS

DEPARTMENT OF PUBLIC WORKS & TRANSPORTATION

SIDEWALKS

Scale:	Adopted:
1"=2'	2011

Drawing No: C-4

Sheet No: 1 OF 1

Revisions					
Description	Approved	Date	Description	Approved	Date
ADD NOTE 6	REM	NOV 07	ADDED NOTES 1, 2, 3, & 5; RENUMBER NOTES	GDM	JAN 11
MODIFY NOTE 1, ADD NOTE 7	GDM	NOV 08			

NOTES:

1. ALL CURB RAMPS FOR NEW CONSTRUCTION, RETROFIT, AND REPLACEMENT SHALL CONFORM TO STATE STANDARDS A88A & A88B AND STATE SPECIFICATION 90-1.01, MINOR (520 LBS CEMENTITIOUS MATERIAL PER CUBIC YARD [5-1/2 SACK]). CONCRETE CURING SHALL BE BY PIGMENTED CURING COMPOUND METHOD USING WHITE PIGMENT TYPE.
2. CURB RAMPS SHALL HAVE A DETECTABLE WARNING SURFACE THAT EXTENDS THE FULL WIDTH AND 3-FEET DEPTH OF THE RAMP PER NOTE 3 (BELOW) AND SHALL CONFORM TO THE DETAILS OF CALTRANS STANDARD A88A.
3. CURB RAMP DETECTABLE WARNING SURFACES SHALL BE:
   YELLOW COLOR COMPLYING WITH FEDERAL STANDARD 595B, COLOR No. 33538
   PREFABRICATED
   RAISED TRUNCATED DOMES
   INSTALLED ACCORDING TO THE MANUFACTURER'S RECOMMENDATIONS
4. NEW SIDEWALKS AND PATHS SHALL BE PROVIDED WITH CURB RAMPS AT ALL INTERSECTIONS.
5. NO UTILITY APPURTENANCES OR LIDS SHALL BE LOCATED WITHIN THE CURB RAMP AND WINGS.
6. MID-BLOCK CURB RAMPS ARE DISCOURAGED AND SHALL REQUIRE PRIOR DEPARTMENT APPROVAL.
7. THE PROJECT ENGINEER SHALL DETAIL EACH CURB RAMP ON THE PLANS. MINIMUM DETAIL REQUIREMENTS SHALL INCLUDE DIMENSIONS, SLOPES, AND SPOT ELEVATIONS.
8. THE DEPARTMENT MAY GRANT EXCEPTIONS TO THESE STANDARDS ON AN INDIVIDUAL BASIS. THE DEPARTMENT ADA COORDINATOR SHALL REVIEW AND PROVIDE PRIOR APPROVAL OF ALL EXCEPTIONS.
9. MULTIPLE RAMPS SHALL BE REQUIRED AT ALL BULB-OUTS AND SHALL BE ALIGNED WITH APPROACH SIDEWALK, REFER TO STANDARD DRAWINGS A-6e & A-6d.
10. INTERNET LINKS TO CALTRANS CURB RAMP STANDARDS (A88A & A88B):
    http://www.dot.ca.gov/hq/esc/oe/project_plans/highway_plans/stdplans_US-customary-units_06/viewable_pdf/rspa88a.pdf
    http://www.dot.ca.gov/hq/esc/oe/project_plans/highway_plans/stdplans_US-customary-units_06/viewable_pdf/a88b.pdf

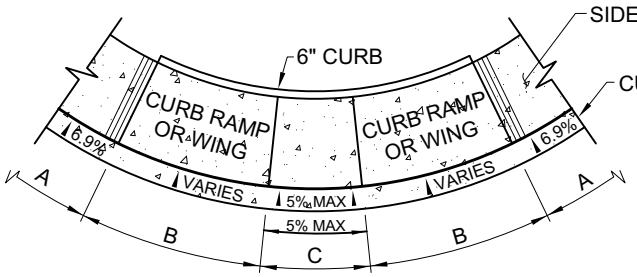

NOTES:

A. GUTTER CROSS SLOPE = 1-1/4" IN 18" = 6.9%
B. GUTTER CROSS SLOPE TRANSITION ZONE (VARIES)
C. GUTTER CROSS SLOPE = 7/8" IN 18" = 4.9% (5% MAX)
   LONGITUDINAL SLOPE = 2% MAX

TYPICAL GUTTER TRANSITION AT CURB RAMP

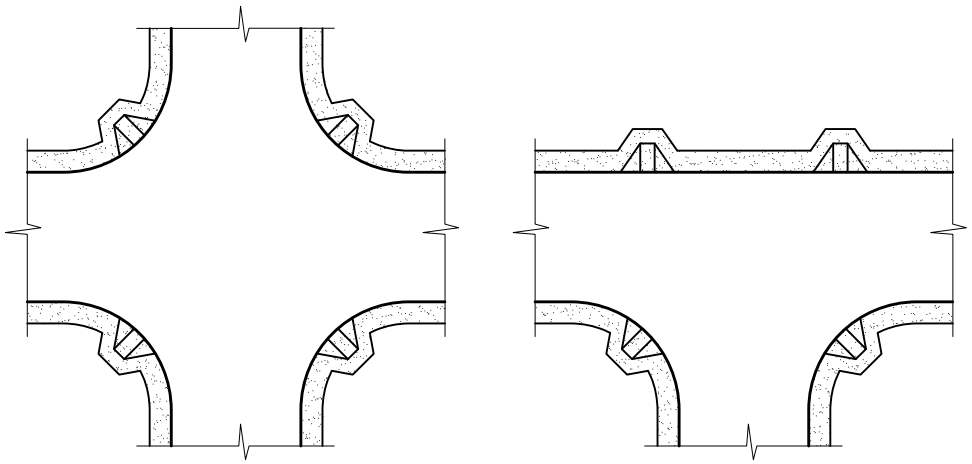

TYPICAL CURB RAMP PLACEMENT

DEPARTMENT OF PUBLIC WORKS & TRANSPORTATION

CURB RAMPS

Scale:	Adopted:
NTS	2011

Drawing No: C-5

Sheet No: 1 OF 1

APPENDIX B

PROJECT PLANS

COUNTY OF SAN LUIS OBISPO, CALIFORNIA
PUBLIC WORKS DEPARTMENT
DESIGN DIVISION

2013-14 ASPHALT OVERLAY
SOUTH BAY BOULEVARD
FROM LOVR TO SANTA YSABEL AVENUE
LOS OSOS, CA
CONTRACT NO. 300504

To Be Supplemented By State Standard Plans Dated May, 2006

INDEX OF SHEETS

SHEET NO. 1	VICINITY MAP
SHEET NO. 2	SITE PLAN – SOUTH BAY BOULEVARD, LOVR TO SANTA YSABEL
SHEET NO. 3	DETECTOR LOOPS – SANTA YSABEL AVENUE
SHEET NO. 4	DETECTOR LOOPS – EL MORRO AVENUE
SHEET NO. 5	DETECTOR LOOPS – LOS OSOS VALLEY ROAD
SHEET NO. 6	CURB RAMPS – SANTA YSABEL AVENUE
SHEET NO. 7	CURB RAMPS – EL MORRO AVENUE
SHEET NO. 8	CURB RAMPS – LOS OSOS VALLEY ROAD
SHEET NO. 9	QUANTITIES

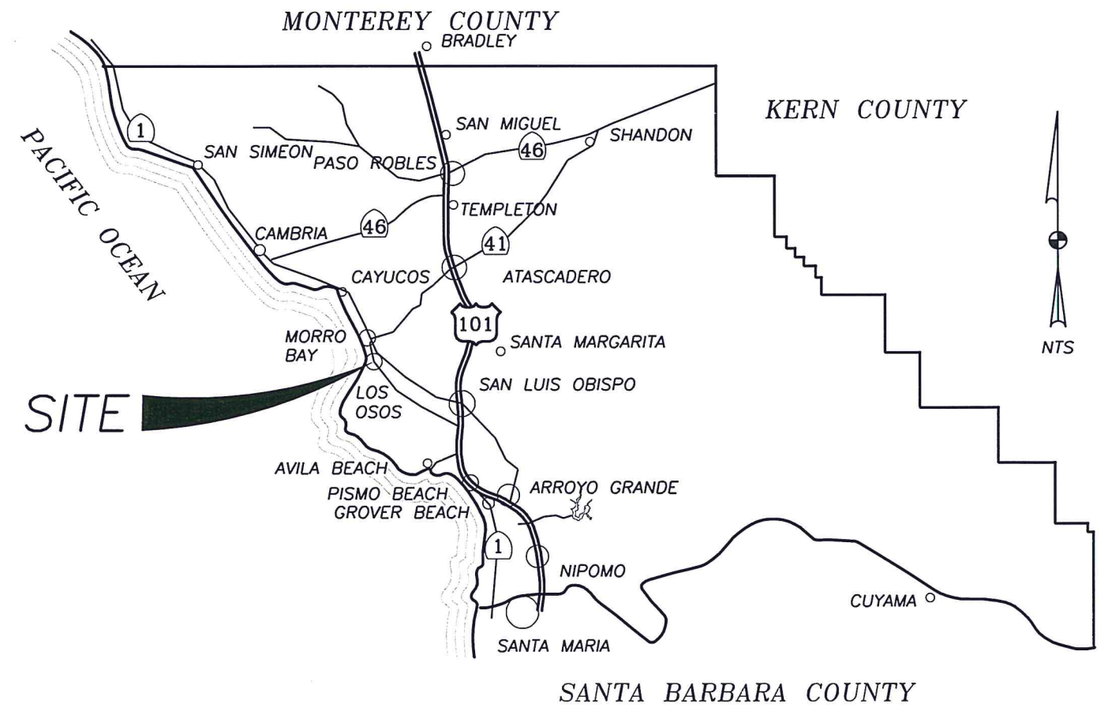

THE CONTRACTOR SHALL POSSESS THE CLASS (OR CLASSES) OF LICENSE AS SPECIFIED IN THE "NOTICE TO BIDDERS"

APPROVED: May 1 ,20 14

Dave Flynn
DEPUTY DIRECTOR OF PUBLIC WORKS
ENGINEERING SERVICES
R.C.E. 43933

REGISTERED PROFESSIONAL ENGINEER DAVID JOHN FLYNN No. C 43933 Exp. 6/30/15 CIVIL STATE OF CALIFORNIA

REGISTERED PROFESSIONAL ENGINEER STEVEN R. JONES C 65124 CIVIL STATE OF CALIFORNIA

4-28-14

COUNTY OF SAN LUIS OBISPO DEPARTMENT OF PUBLIC WORKS

2013–14 ASPHALT OVERLAY
CONTRACT NO. 300504

VICINITY MAP

SAN LUIS OBISPO COUNTY

Designer	Date	Drawn By	Date	Design Engineer	Date
S JONES	2/2014	S JONES	2/2014	J. WERST	2/2014

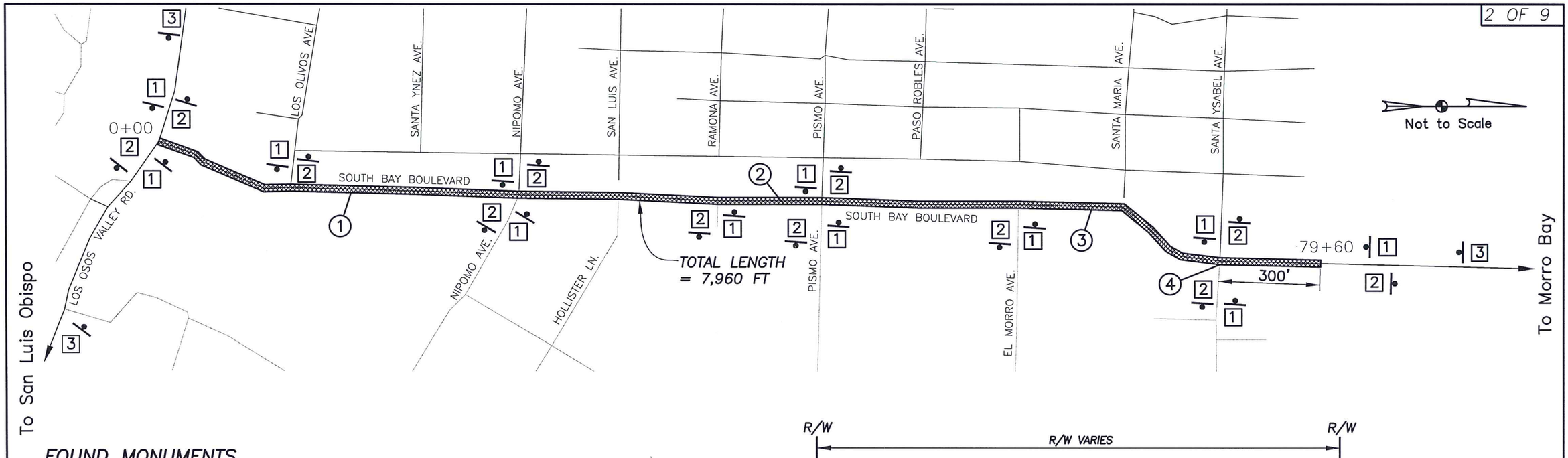

FOUND MONUMENTS

No.	Station	Offset	Descriptioin	Reference
1	24+10	0	2" BRASS DISC IN MONUMENT WELL	COUNTY ROAD PLAN 254670
2	45+44	0	2" BRASS DISC IN MONUMENT WELL	COUNTY ROAD PLAN 254670
3	64+15	0	2" BRASS DISC IN MONUMENT WELL	COUNTY ROAD PLAN 254670
4	76+50	0	2" BRASS DISC IN MONUMENT WELL	COUNTY ROAD PLAN 254670

ROAD MONUMENTS TO BE PROTECTED, REPLACED, OR ADJUSTED TO FINIGH GRADE

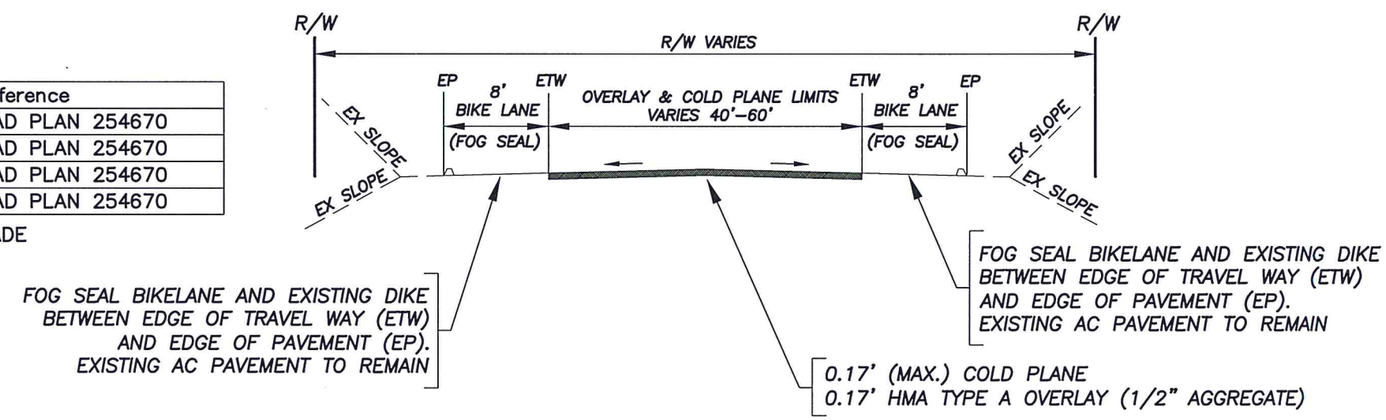

SECTION – SOUTH BAY BOULEVARD
NOT TO SCALE

CONSTRUCTION AREA SIGNS LEGEND

No.	Type	Size	Sign Message	Remarks
1	W20–1	48"x48"	"ROAD WORK AHEAD"	
2	G20–2	48"x18"	"END ROAD WORK"	
3	PCMS		AS DIRECTED BY ENGINEER	PORTABLE CHANGEABLE MESSAGE SIGN

1.) 48"x48" SIGNS SHALL BE STATIONARY MOUNTED ON 4x6 WOOD POSTS.
48"x18" SIGNS SHALL BE STATIONARY MOUNTED ON 4x4 WOOD POSTS.

2.) ALL CONSTRUCTION SIGNS SHALL BE PLACED APPROXIMATELY 4' OFF THE EDGE OF ROADWAY, 7' MIN. HEIGHT, THE EXACT LOCATION AND POSITION OF SIGNS SHALL BE DETERMINED BY THE ENGINEER.

REGISTERED PROFESSIONAL ENGINEER
STEVEN R. JONES
C 65124
CIVIL
STATE OF CALIFORNIA

3-21-14

COUNTY OF SAN LUIS OBISPO DEPARTMENT OF PUBLIC WORKS

2013–14 ASPHALT OVERLAY
CONTRACT NO. 300504

SITE PLAN - SOUTH BAY BOULEVARD
LOVR TO SANTA YSABEL AVENUE

SAN LUIS OBISPO COUNTY

Designer	Date	Drawn By	Date	Design Engineer	Date
S JONES	2/2014	S JONES	2/2014	J. WERST	2/2014

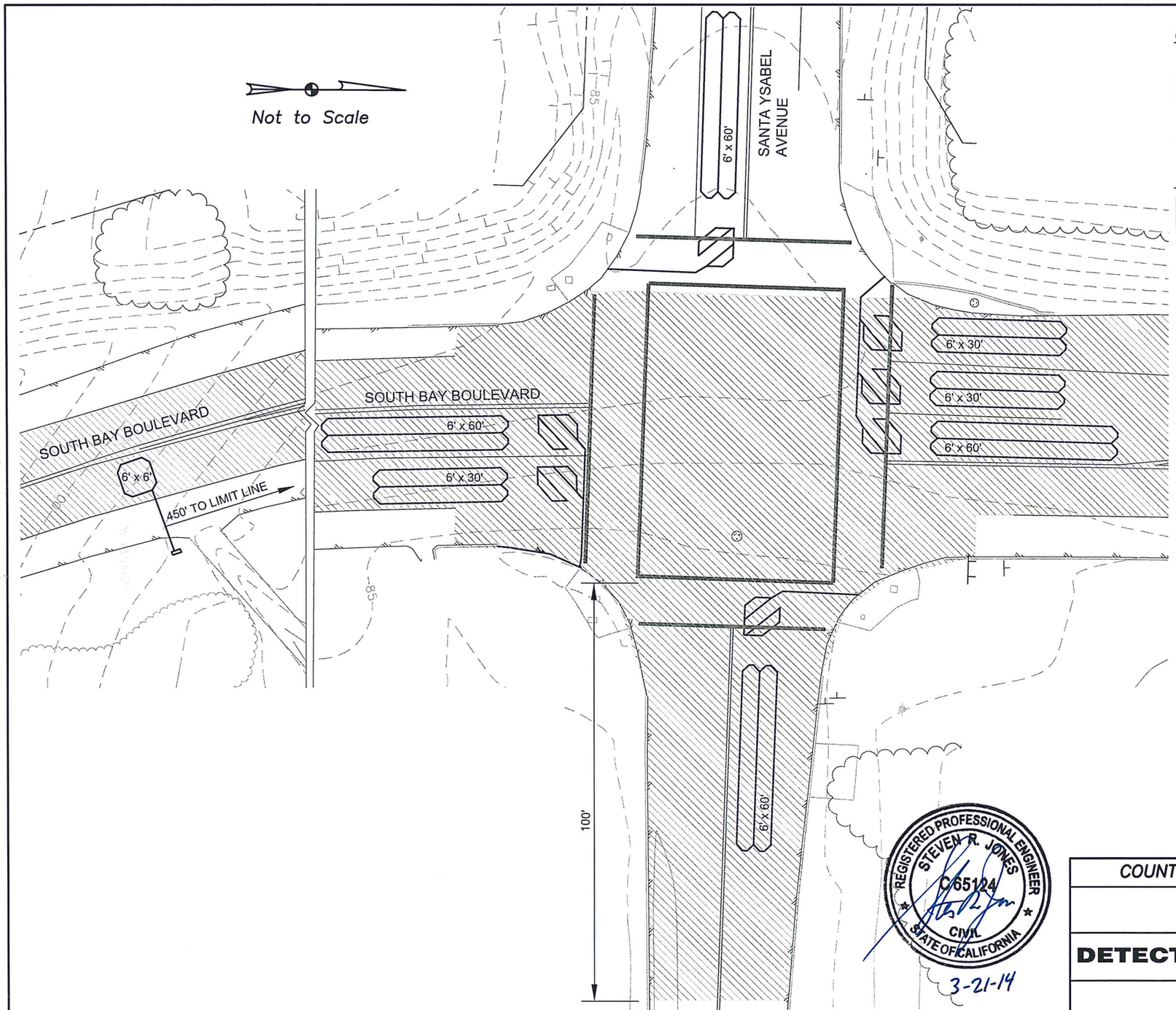

GENERAL NOTES:

1.) EXISTING STRIPES AND PAVEMENT MARKINGS TO BE REPLACED. CONTRACTOR TO TIE OUT BEFORE REMOVING ROADWAY SURFACE. STRIPING BY OTHERS (COUNTY CREW).

2.) EXISTING UTILITY, VALVES COVERS, RISERS, TRAFFIC LIGHTS, VAULTS, AND MANHOLES (PROTECT IN PLACE).

LEGEND:

HATCH REPRESENTS LIMITS OF COLD PLANE AND AC OVERLAY (0.17') (½" HMA)

REPLACE EXISTING DETECTOR LOOPS WITH TYPE C&D LOOP AND TYPE 2 CONDUCTOR WIRE PER CALTRANS STD. DWG ES–5A,5B. PLACE UNDER FINAL HMA LIFT.

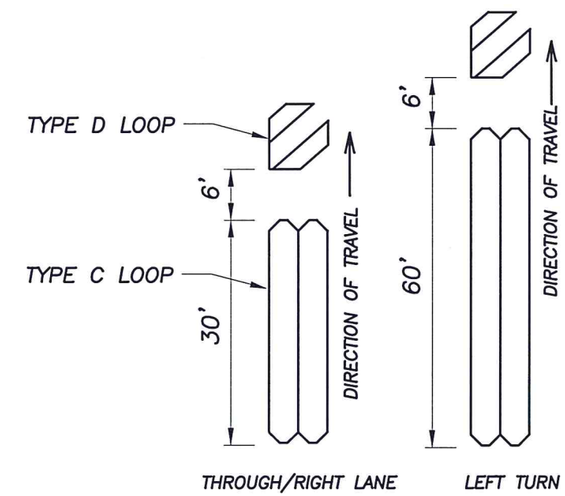

DETECTOR LOOP DETAIL

COUNTY OF SAN LUIS OBISPO DEPARTMENT OF PUBLIC WORKS

2013–14 ASPHALT OVERLAY
CONTRACT NO. 300504

DETECTOR LOOPS - SANTA YSABEL AVENUE

SAN LUIS OBISPO COUNTY

Designer	Date	Drawn By	Date	Design Engineer	Date
S JONES	2/2014	S JONES	2/2014	J. WERST	2/2014

GENERAL NOTES:

1.) EXISTING STRIPES AND PAVEMENT MARKINGS TO BE REPLACED. CONTRACTOR TO TIE OUT BEFORE REMOVING ROADWAY SURFACE. STRIPING BY OTHERS (COUNTY CREW).

2.) EXISTING UTILITY, VALVES COVERS, RISERS, TRAFFIC LIGHTS, VAULTS, AND MANHOLES (PROTECT IN PLACE).

LEGEND:

HATCH REPRESENTS LIMITS OF COLD PLANE AND AC OVERLAY (0.17') (½" HMA)

REPLACE EXISTING DETECTOR LOOPS WITH TYPE C&D LOOP AND TYPE 2 CONDUCTOR WIRE PER CALTRANS STD. DWG ES–5A,5B. PLACE UNDER FINAL HMA LIFT.

Not to Scale

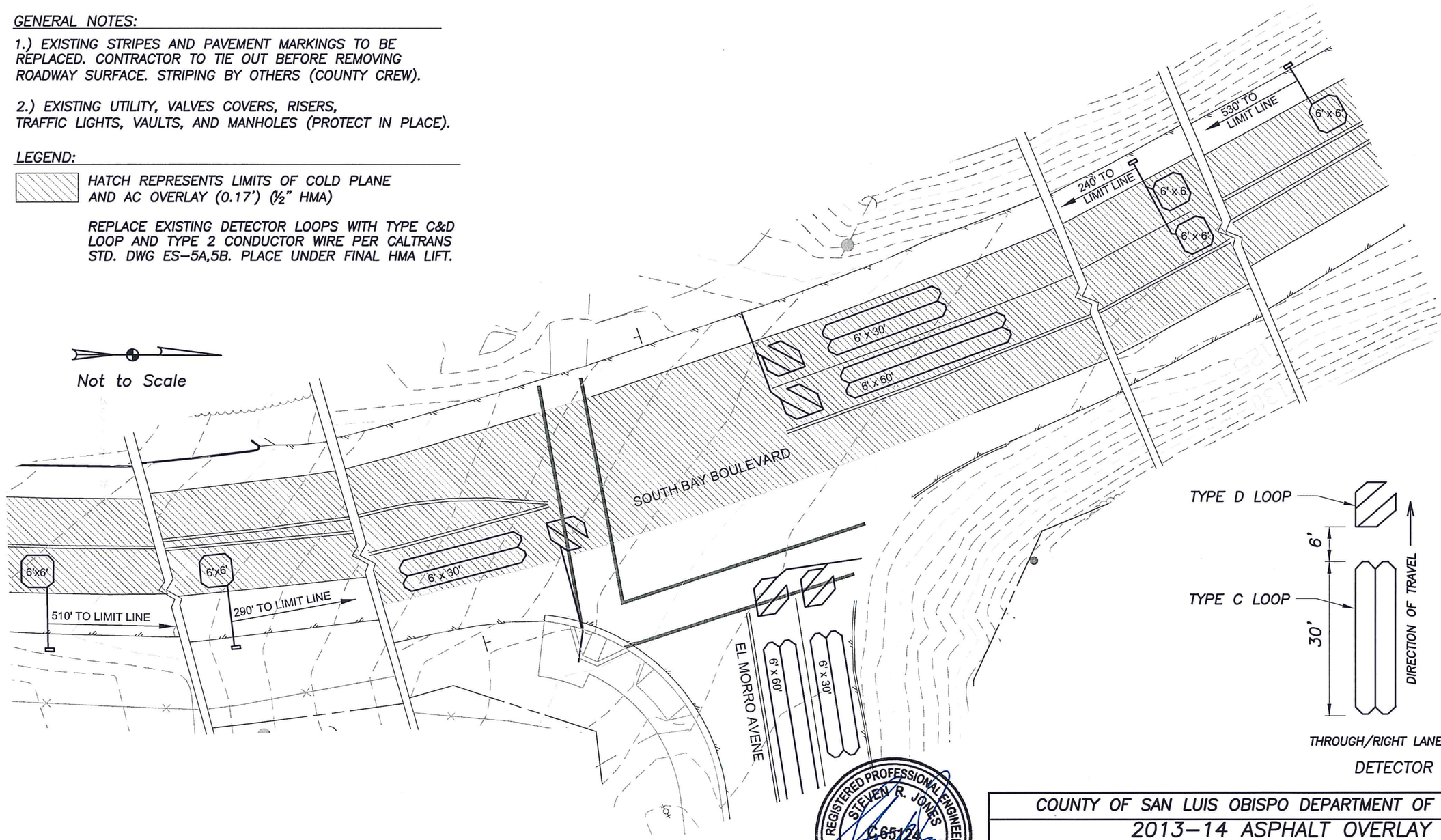

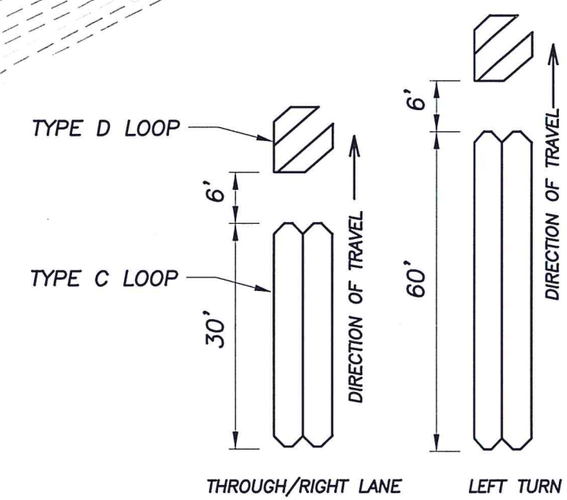

DETECTOR LOOP DETAIL

REGISTERED PROFESSIONAL ENGINEER STEVEN R. JONES C 65124 CIVIL STATE OF CALIFORNIA

3-21-14

COUNTY OF SAN LUIS OBISPO DEPARTMENT OF PUBLIC WORKS					
2013–14 ASPHALT OVERLAY CONTRACT NO. 300504					
DETECTOR LOOPS - EL MORRO AVENUE					
SAN LUIS OBISPO COUNTY					
Designer	Date	Drawn By	Date	Design Engineer	Date
S JONES	2/2014	S JONES	2/2014	J. WERST	2/2014

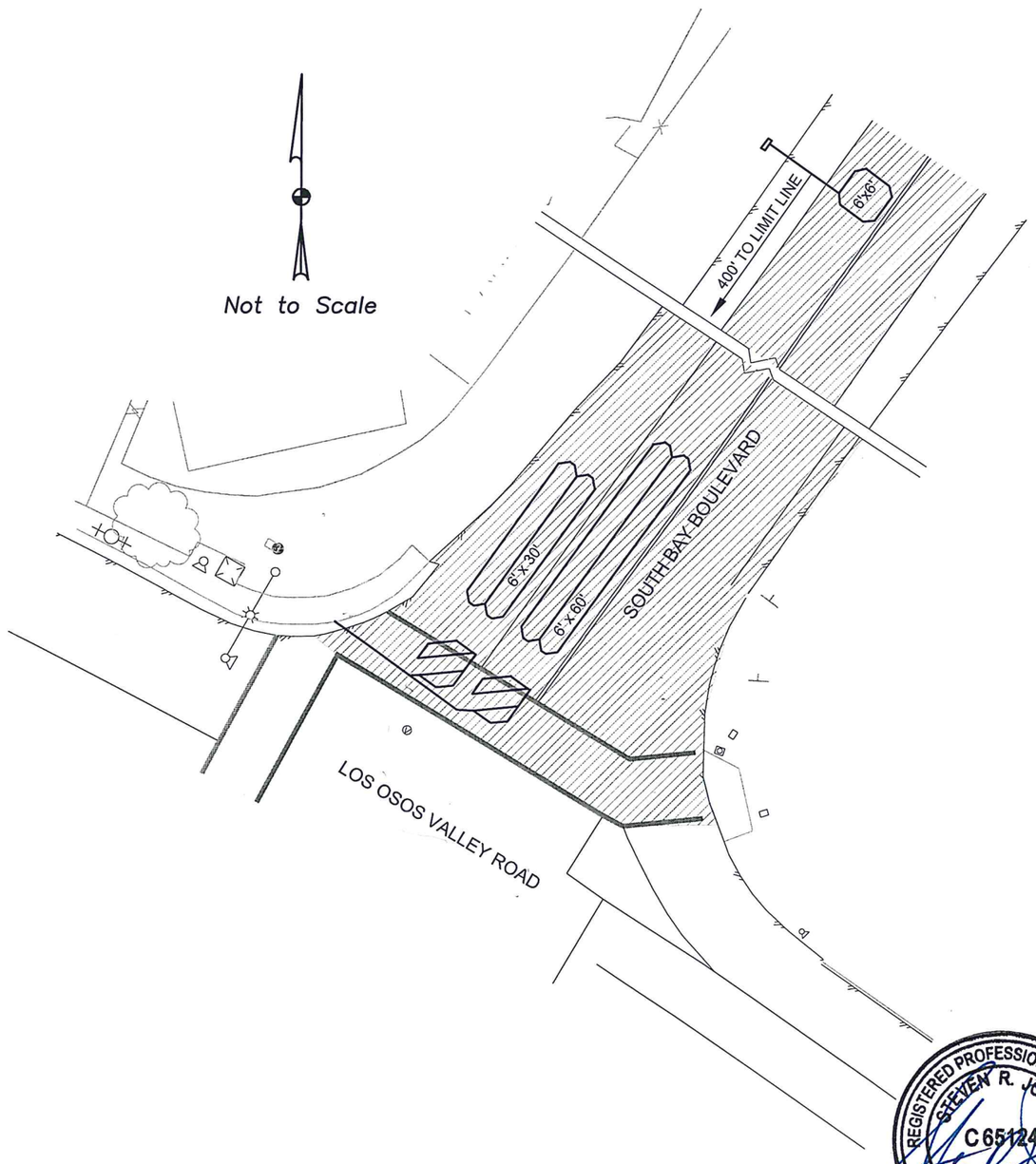

GENERAL NOTES:

1.) EXISTING STRIPES AND PAVEMENT MARKINGS TO BE REPLACED. CONTRACTOR TO TIE OUT BEFORE REMOVING ROADWAY SURFACE. STRIPING BY OTHERS (COUNTY CREW).

2.) EXISTING UTILITY, VALVES COVERS, RISERS, TRAFFIC LIGHTS, VAULTS, AND MANHOLES (PROTECT IN PLACE).

LEGEND:

HATCH REPRESENTS LIMITS OF COLD PLANE AND AC OVERLAY (0.17') (½" HMA)

REPLACE EXISTING DETECTOR LOOPS WITH TYPE C&D LOOP AND TYPE 2 CONDUCTOR WIRE PER CALTRANS STD. DWG ES–5A,5B. PLACE UNDER FINAL HMA LIFT.

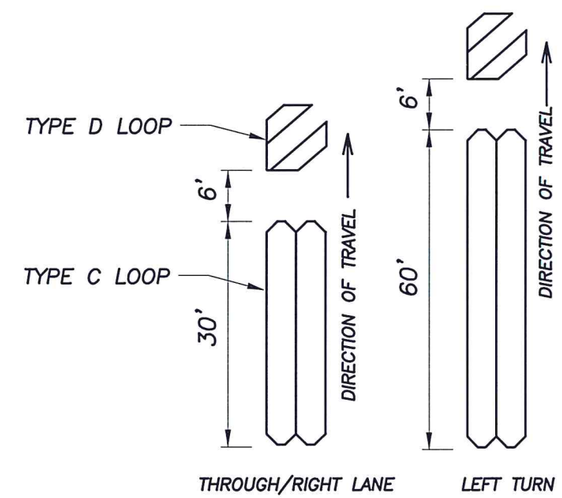

DETECTOR LOOP DETAIL

REGISTERED PROFESSIONAL ENGINEER
STEVEN R. JONES
C 65124
CIVIL
STATE OF CALIFORNIA

3-21-14

COUNTY OF SAN LUIS OBISPO DEPARTMENT OF PUBLIC WORKS

2013–14 ASPHALT OVERLAY
CONTRACT NO. 300504

DETECTOR LOOPS - LOS OSOS VALLEY ROAD

SAN LUIS OBISPO COUNTY

Designer	Date	Drawn By	Date	Design Engineer	Date
S JONES	2/2014	S JONES	2/2014	J. WERST	2/2014

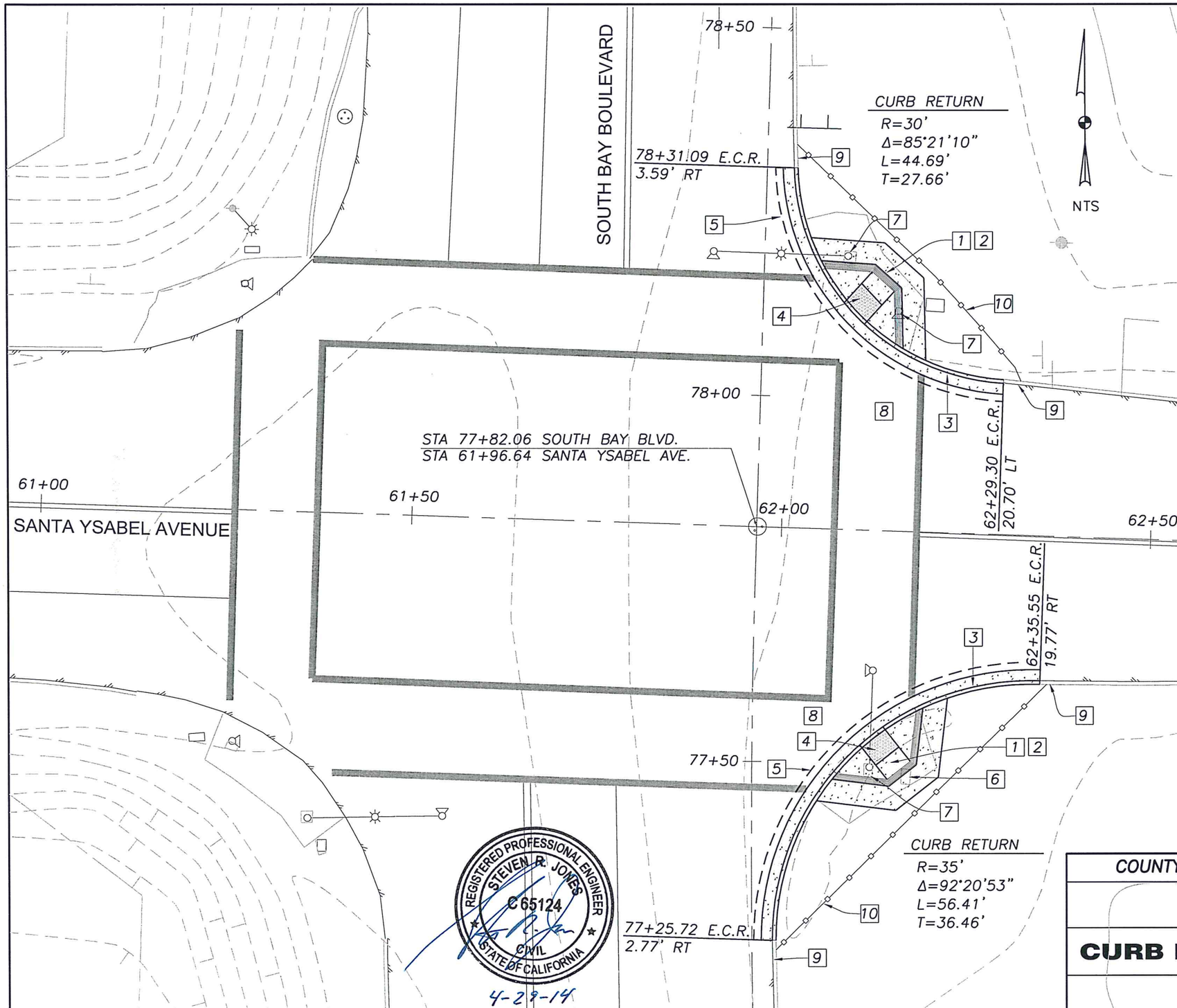

LEGEND:

	LIMITS OF MINOR CONCRETE WORK
1	REMOVE AND REPLACE EXISTING ASPHALT CONCRETE CURB RAMP
2	CONSTRUCT PCC CURB RAMP PER CAL TRANS STANDARD PLAN A88A, CASE A, DETAIL B. AND SLO COUNTY STANDARD DRAWING C-5. CONSTRUCT RETAINING CURB AT TOP OF LANDING AS NEEDED.
3	CONSTRUCT PCC CURB AND GUTTER PER SLO COUNTY STANDARD DRAWING C-2, AND C-4.
4	INSTALL RAISED TRUNCATED DOME DETECTABLE WARNING SURFACE PER CAL TRANS STANDARD DRAWING A88A
5	SAWCUT AND REMOVE EXISTING PAVEMENT 1' WIDE REPLACE WITH HMA TYPE A.
6	ADJUST EXISTING SIGNAL BOXES TO FINISH GRADE, OR REPLACE AS DETERMINED BY ENGINEER.
7	EXISTING SIGNAL POLES TO REMAIN
8	STRIPING BY OTHERS
9	REMOVE AND REPLACE 3' OF EXISTING HMA DIKE TO CONFORM TO NEW PCC CURB. (INCLUDED IN PAYMENT FOR MINOR CONCRETE)
10	INSTALL TEMPORARY ORANGE FENCING (TYPE ESA) AS DIRECTED BY COUNTY STAFF.

COUNTY OF SAN LUIS OBISPO DEPARTMENT OF PUBLIC WORKS

2013-14 ASPHALT OVERLAY
CONTRACT NO. 300504

CURB RAMPS - SANTA YSABEL AVENUE

SAN LUIS OBISPO COUNTY

Designer	Date	Drawn By	Date	Design Engineer	Date
S JONES	2/2014	S JONES	2/2014	J. WERST	2/2014

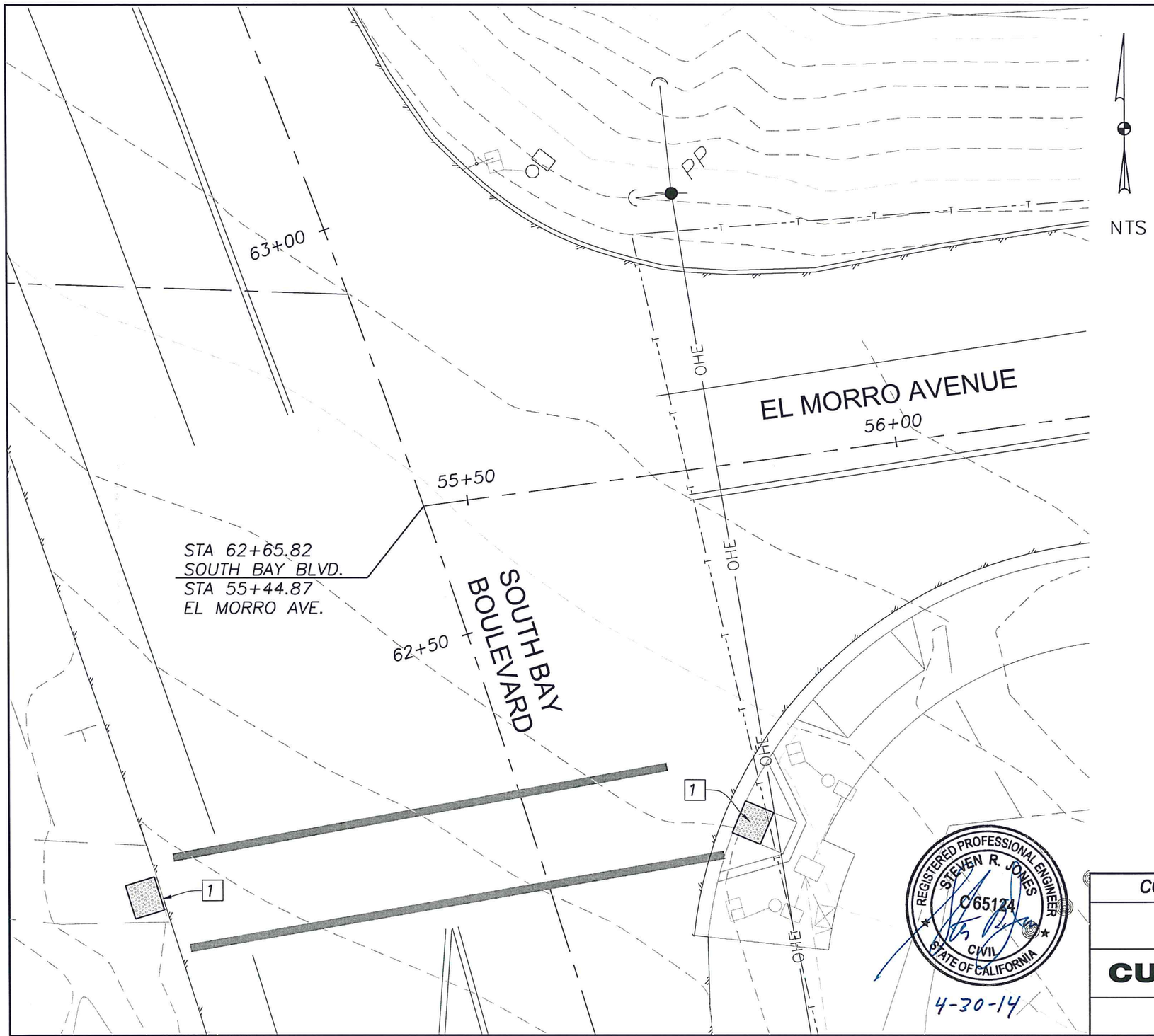

LEGEND:

1 INSTALL RAISED TRUNCATED DOME DETECTABLE WARNING SURFACE PER CAL TRANS STANDARD DRAWING A88A

REGISTERED PROFESSIONAL ENGINEER
STEVEN R. JONES
C65124
CIVIL
STATE OF CALIFORNIA

4-30-14

COUNTY OF SAN LUIS OBISPO DEPARTMENT OF PUBLIC WORKS

2013–14 ASPHALT OVERLAY
CONTRACT NO. 300504

CURB RAMPS - EL MORRO AVENUE

SAN LUIS OBISPO COUNTY

Designer	Date	Drawn By	Date	Design Engineer	Date
S JONES	2/2014	S JONES	2/2014	J. WERST	2/2014

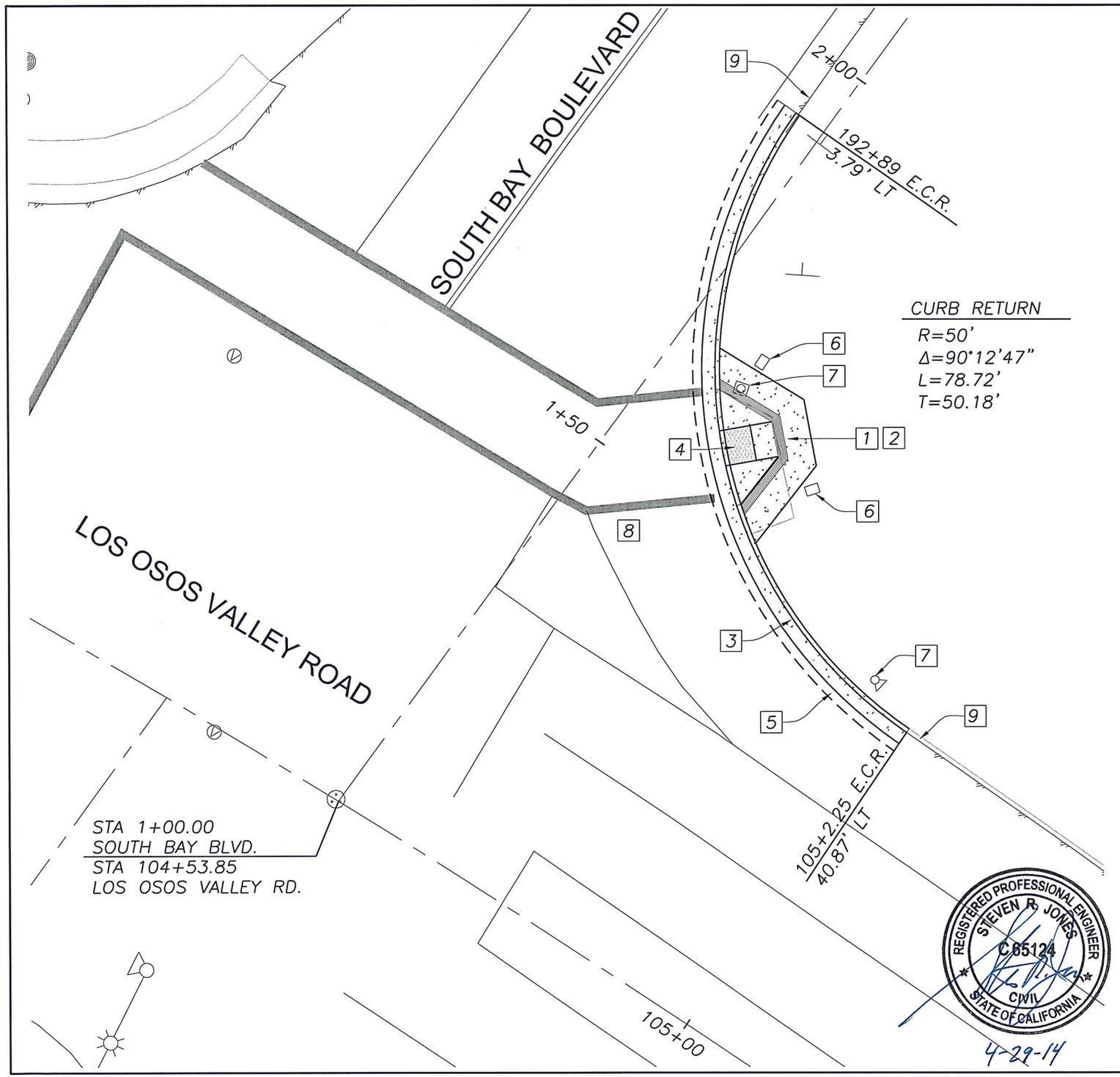

NTS

LEGEND:

LIMITS OF MINOR CONCRETE WORK

1 REMOVE AND REPLACE EXISTING ASPHALT CONCRETE CURB RAMP

2 CONSTRUCT PCC CURB RAMP PER CAL TRANS STANDARD PLAN A88A, CASE A, DETAIL B. AND SLO COUNTY STANDARD DRAWING C-5.

3 CONSTRUCT PCC CURB AND GUTTER PER SLO COUNTY STANDARD DRAWING C-2, AND C-4.

4 INSTALL RAISED TRUNCATED DOME DETECTABLE WARNING SURFACE PER CAL TRANS STANDARD DRAWING A88A

5 SAWCUT AND REMOVE EXISTING PAVEMENT 1' WIDE REPLACE WITH HMA TYPE A.

6 ADJUST EXISTING SIGNAL BOXES TO FINISH GRADE, OR REPLACE AS DETERMINED BY ENGINEER.

7 EXISTING SIGNAL POLES TO REMAIN

8 STRIPING BY OTHERS

9 REMOVE AND REPLACE 3' OF EXISTING HMA DIKE TO CONFORM TO NEW PCC CURB. (INCLUDED IN PAYMENT FOR MINOR CONCRETE)

COUNTY OF SAN LUIS OBISPO DEPARTMENT OF PUBLIC WORKS

2013-14 ASPHALT OVERLAY
CONTRACT NO. 300504

CURB RAMPS - LOS OSOS VALLEY ROAD

SAN LUIS OBISPO COUNTY

Designer	Date	Drawn By	Date	Design Engineer	Date
S JONES	2/2014	S JONES	2/2014	J. WERST	2/2014

PORTABLE CHANGEABLE MESSAGE SIGN

LOCATION	QUANTITY
SOUTH BAY BOULEVARD, SOUTHBOUND LANE	1
LOS OSOS VALLEY ROAD, EASTBOUND LANE	1
LOS OSOS VALLEY ROAD, WESTBOUND LANE	1
TOTAL	3

TEMPORARY FENCING (TYPE ESA)

LOCATION	QUANTITY (LF)
SANTA YSABEL AVENUE AND SOUTH BAY BOULEVARD (PROTECT EXISTING ICE PLANT AT RETURNS)	100
TOTAL	100

COLD PLANE ASPHALT CONCRETE PAVEMENT (0.17' MAX)

LOCATION	LENGTH (LF)	WIDTH (LF)	AREA (SY)	ROUNDED AREA (SY)
FULL LANE WIDTH BETWEEN EDGE OF TRAVELED WAY (ETW/FOGLINE) FROM LOVR TO SOUTH BAY BOULEVARD	7800	29.42 (AVG)	25,497	25,500
SANTA YSABEL AVENUE, ROADWAY, INTERSECTION AND CURB RETURNS	150	50	750	750
LOS OSOS VALLEY ROAD INTERSECTION AND CURB RETURNS	80	50	444	450
		TOTAL	26,691	26,700

ASPHALTIC EMULSION (REJUVENATING SEAL COAT)

LOCATION	LENGTH (LF)	AVG. WIDTH (LF)	AREA (SY)	THEORETICAL VOLUME (GAL)	THEORETICAL WEIGHT (TONS)	ROUNDED WEIGHT (TONS)
NORTHBOUND BIKE LANE AND DIKE	7,800	6.5	5,633	281	1.17	2.5
SOUTHBOUND BIKE LANE AND DIKE	7,800	6.5	5,633	281	1.17	2.5
					TOTAL	5

HOT MIX ASPHALT (TYPE A)

DESCRIPTION	LENGTH (LF)	AVG. WIDTH (LF)	AREA (SF)	LOVR AND SANTA YSABEL INTERSECTION (SF)	THICKNESS (LF)	THEORETICAL WEIGHT (TONS)	ROUNDED WEIGHT (TONS)
OVERLAY (TYPE A)	7,960	29.42	234,180	10,750	0.17	3,019	3,050

MINOR CONCRETE CURB RAMPS

DESCRIPTION	LOCATION	QUANTITY (EA)
CURB RAMPS	RETURNS AT SANTA YSABEL AVENUE	2
CURB RAMP	NE RETURN AT LOS OSOS VALLEY ROAD	1

DIGOUTS

DESCRIPTION	LOCATION	AREA (SY)	WEIGHT (TON)
COLD PLANE (0.33' MAX.)	TRAVEL LANE, LOCATIONS DETERMINED BY ENGINEER	1335	
HMA (TYPE A)	TRAVEL LANE, LOCATIONS DETERMINED BY ENGINEER		287

MINOR CONCRETE CURB AND GUTTER

DESCRIPTION	LOCATION	LENGTH (LF)
CURB AND GUTTER	RETURNS AT SANTA YSABEL AVENUE	115
CURB AND GUTTER	NE RETURN AT EL MORRO AVENUE	32
CURB AND GUTTER	NE RETURN AT LOS OSOS VALLEY ROAD	79

TRUNCATED DOME MAT

DESCRIPTION	LOCATION	QUANTITY (EA)
TRUNCATED DOME MAT	RETURNS AT SANTA YSABEL AVENUE	2
TRUNCATED DOME MAT	SE RETURN, AND WEST PATH AT EL MORRO AVENUE	2
TRUNCATED DOME MAT	NE RETURN AT LOS OSOS VALLEY ROAD	1

DETECTOR LOOPS

LOCATION	QUANITY (EA)	BID ITEM
SANTA YSABEL AVENUE INTERSECTION	7	LUMP SUM
EL MORRO AVENUE INTERSECTION	8	
LOS OSOS VALLEY ROAD INTERSECTION	3	

SURVEY MONUMENTS

LOCATION	QUANTITY (EA)	DESCRIPTION
2400 FEET FROM LOVR INTERSECTION	1	MONUMENT WELL IN NORTHBOUND BIKELANE
4544 FEET FROM LOVR INTERSECTION	1	MONUMENT WELL IN SOUTHBOUND LANE NEXT TO FOG LINE / EDGE OF TRAVELED WAY (ETW)
6415 FEET FROM LOVR INTERSECTION	1	MONUMENT WELL IN SOUTHBOUND LANE NEXT TO FOG LINE / EDGE OF TRAVELED WAY (ETW)
7650 FEET FROM LOVR INTERSECTION	1	MONUMENT WELL IN NORTHBOUND LANE NEXT TO EDGE OF TRAVELED WAY (ETW)

QUANTITIES AND DIMENSIONS APPROXIMATE ONLY

REGISTERED PROFESSIONAL ENGINEER
STEVEN R. JONES
C 65124
CIVIL
STATE OF CALIFORNIA
4-30-14

COUNTY OF SAN LUIS OBISPO DEPARTMENT OF PUBLIC WORKS

2013-14 ASPHALT OVERLAY
CONTRACT NO. 300504

QUANTITIES

SAN LUIS OBISPO COUNTY

Designer	Date	Drawn By	Date	Design Engineer	Date
S JONES	2/2014	S JONES	2/2014	J. WERST	2/2014