SAN LUIS OBISPO COUNTY
FLOOD CONTROL AND WATER CONSERVATION DISTRICT

NWP NACIMIENTO WATER PROJECT

San Luis Obispo County Flood Control & Water Conservation District

PLANS FOR THE CONSTRUCTION OF
NACIMIENTO WATER PROJECT
NACIMIENTO RIVER CROSSING PIPE REPAIR
NORTHWEST OF PASO ROBLES, CA
CONTRACT NO. 300529

VICINITY MAP
NO SCALE

PROJECT APPROVALS:

APPROVED: NOVEMBER 18, 2014

PAUL R. KNEITZ, P.E.
PROJECT MANAGER
RPE C30578 (EXP 3-31-2016)

APPROVED: November 18, 2014

DEPUTY DIRECTOR OF PUBLIC WORKS

APPROVED: November 18, 2014

UTILITIES DIVISION MANAGER

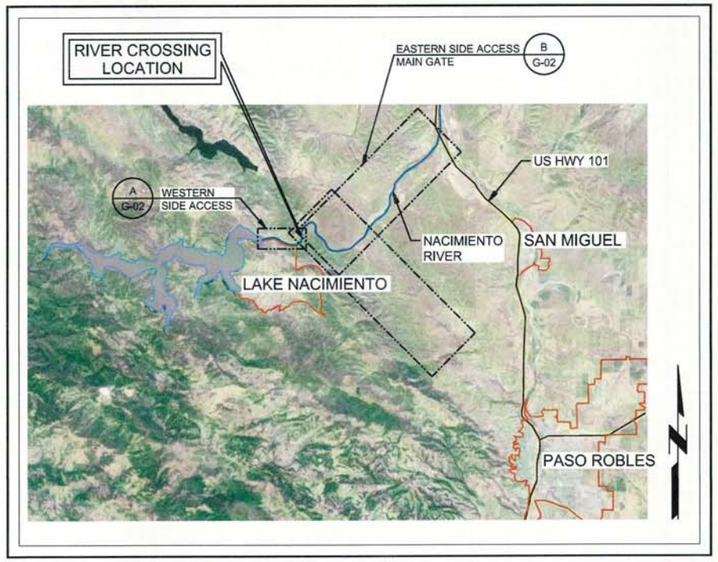

PROJECT LOCATION
NO SCALE

DATE	REVISIONS AND RECORD OF ISSUE	NO.	BY	CK	APP

PW FLDR: 185582 ... LSO 3010 - General Drawings
PW FILE: G-01.dwg
XREF1:
XREF2:
XREF3:
XREF4:
SAVED: MCC10764, 11/12/2014 4:08:41 PM
PLOTTED: MCC10764, 11/12/2014 4:07:55 PM
USER: MCC10764
DWG VER: 1001

REGISTERED PROFESSIONAL ENGINEER
CHRISTY A. BEVINGTON
No. 73306
Exp. 6/30/2015
STATE OF CALIFORNIA

BLACK & VEATCH
Building a world of difference.

Black & Veatch Corporation
Walnut Creek, California

SAN LUIS OBISPO COUNTY
FLOOD CONTROL AND
WATER CONSERVATION DISTRICT

NACIMIENTO RIVER CROSSING PIPE REPAIR
GENERAL
COVER SHEET AND MAPS

DESIGNED: EVB
DETAILED: SMM
CHECKED: TDK
APPROVED: PRK
DATE: 11/18/14

0 1/2 1
IF THIS BAR DOES NOT MEASURE 1" THEN DRAWING IS NOT TO FULL SCALE

PROJECT NO.
B&V 185582

G-01
SHEET
1 OF 8

FD7000
D7000

A G-01 **WESTERN SIDE ACCESS MAP**
1" = 500'-0"

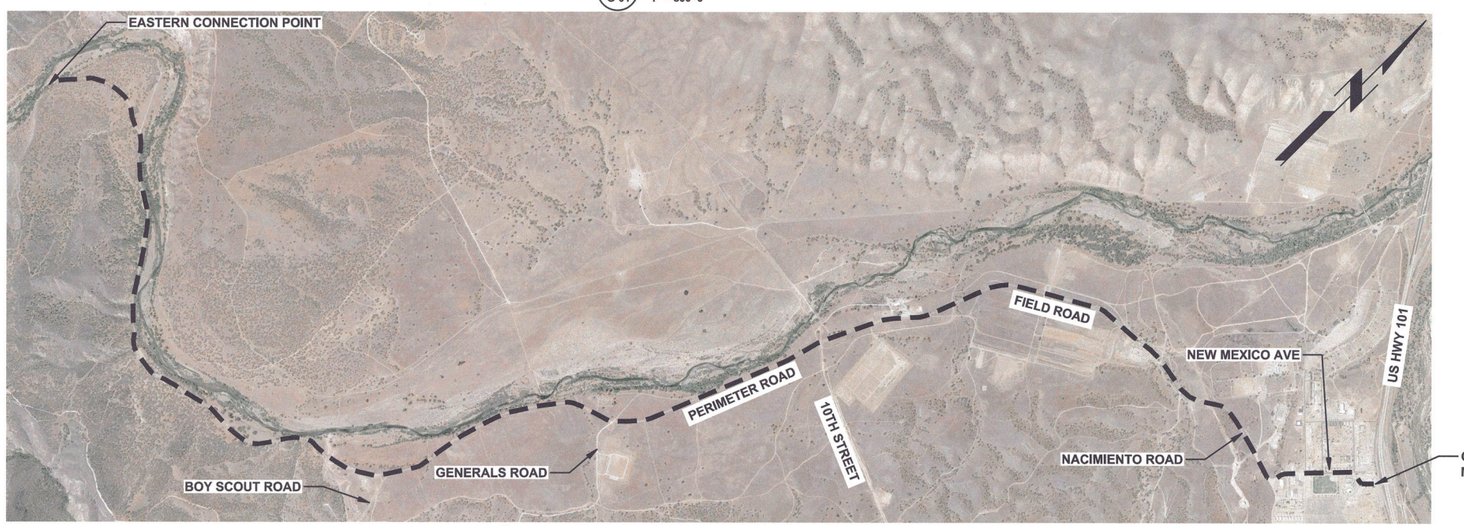

B G-01 **EASTERN SIDE ACCESS MAP - FROM CAMP ROBERTS MAIN GATE**
1" = 2000'-0"

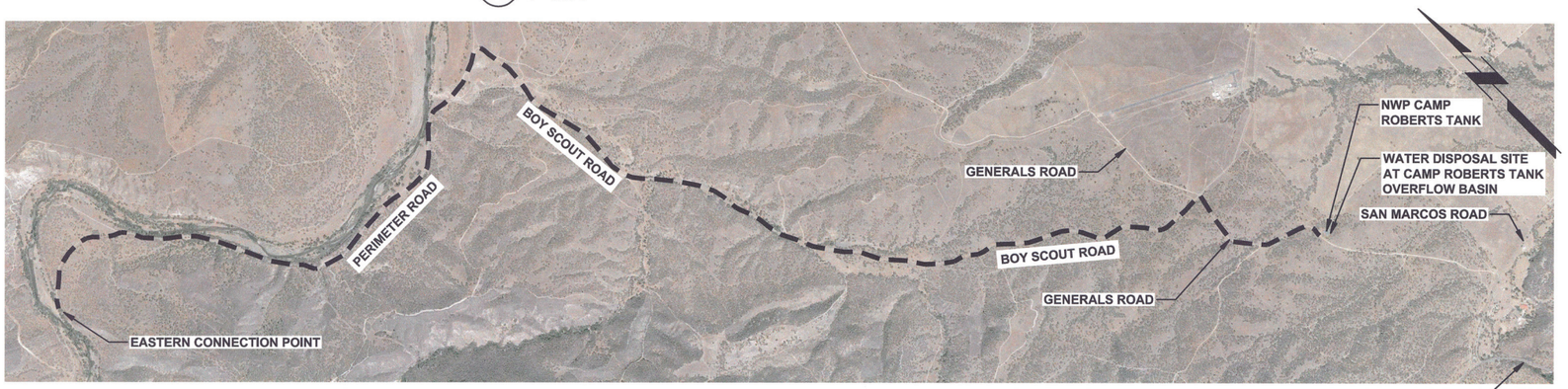

C G-01 **EASTERN SIDE ACCESS MAP - TO NWP CAMP ROBERTS TANK**
1" = 2000'-0"

SHEET LIST

SHEET NO.	DWG NO.	DWG TITLE
	GENERAL	
1	G-01	COVER SHEET AND MAPS
2	G-02	ACCESS MAPS, SHEET LIST, ABBREVIATIONS, LEGEND, AND NOTES
	CIVIL	
3	C-01	HDD RIVER CROSSING, PLAN AND PROFILE
4	C-02	CONNECTION AREA, WESTERN END (UPSTREAM)
5	C-03	CONNECTION AREA, EASTERN END (DOWNSTREAM)
6	C-04	CONNECTION DETAILS
7	C-05	MISCELLANEOUS DETAILS
8	C-06	MISCELLANEOUS DETAILS

ABBREVIATIONS

Ø	DIAMETER	HDD	HORIZONTAL DIRECTION DRILL
AC	ASPHALTIC CONCRETE	HDPE	HIGH-DENSITY POLYETHYLENE
AH	AHEAD	HWY	HIGHWAY
AR/AV	AIR RELEASE/AIR VACUUM	ID	INNER DIAMETER
AVE	AVENUE	IN	INCH
AVG	AVERAGE	MAX	MAXIMUM
BK	BACK	MIN	MINIMUM
CAV	COMBINATION AIR VALVE	MJ	MECHANICAL JOINT
C/L	CENTERLINE	NOM	NOMINAL
CLR	CLEAR	NWP	NACIMIENTO WATER PROJECT
CLSM	CONTROLLED LOW STRENGTH MATERIAL	OC	ON CENTER
CMC	CEMENT MORTAR COATED	OD	OUTER DIAMETER
CML	CEMENT MORTAR LINED	P/E	PERMANENT EASEMENT
CMLC	CEMENT MORTAR LINED AND COATED	PSF	POUNDS PER SQUARE FOOT
CYL	CYLINDER	PSI	POUNDS PER SQUARE INCH
DIA	DIAMETER	RW	RAW WATER
DIP	DUCTILE IRON PIPE	SCH	SCHEDULE
DR9	DIAMETER RATIO OF 9	SCHED	SCHEDULE
EF	ELECTROFUSION	SQ	SQUARE
EL	ELEVATION	SS	STAINLESS STEEL
EW	EACH WAY	STA	STATION
EXIST	EXISTING	STL	STEEL
EXP	EXPANSION	STRUCT	STRUCTURAL
FL	FLOW LINE	T/E	TEMPORARY EASEMENT
FO	FIBER OPTIC	THK	THICK
FRP	FIBERGLASS REINFORCED POLYMER	TYP	TYPICAL
FT	FEET	WSP	WELDED STEEL PIPE
GALV	GALVANIZED		
GV	GATE VALVE		

LEGEND

- —T/E— TEMPORARY CONSTRUCTION EASEMENT LINE
- —P/E— PERMANENT EASEMENT LINE
- —P/L— PROPERTY LINE
- BUILDINGS, STRUCTURES
- STRUCTURES UNDERGROUND
- HEDGE, BRUSH, SHRUBS, WOODS
- —×—×— FENCE
- CENTERLINE
- EARTH OR GRADE
- 1 / C-02 — SECTION NUMBER OR DETAIL LETTER; DRAWING NUMBER ON WHICH SECTION OR DETAIL APPEARS; OR WHERE SECTION IS CUT OR DETAIL IS NOTED

GENERAL NOTES

1. ALL PIPE SIZES INDICATED IN THIS DRAWING SET ARE NOMINAL INNER DIAMETER, UNLESS OTHERWISE NOTED. EXISTING PIPE DIMENSIONS SHALL BE FIELD VERIFIED FOR ANY WORK PERTAINING TO THAT PIPE.

NO.	BY	CK.	APP	DATE	REVISIONS AND RECORD OF ISSUE

PW FLDR: 185582 - ...\SO. 3010 - General Drawings
PW FILE: G-02.dwg
XREF1:
XREF2:
XREF3:
XREF4:
SAVED: MCC10764, 11/18/2014 5:11:20 PM
PLOTTED: MCC10764, 11/18/2014 5:11:24 PM
USER: MCC10764
DWG VER: 1002

REGISTERED PROFESSIONAL ENGINEER — BEVINGTON, ERICK V. — C 78196 — CIVIL — STATE OF CALIFORNIA — Exp. 9/30/2015

BLACK & VEATCH
Building a world of difference.
Black & Veatch Corporation
Walnut Creek, California

SAN LUIS OBISPO COUNTY
FLOOD CONTROL AND
WATER CONSERVATION DISTRICT

NACIMIENTO RIVER CROSSING PIPE REPAIR
ACCESS MAPS, SHEET LIST,
ABBREVIATIONS, LEGNED, AND NOTES

DESIGNED: EVB
DETAILED: SMM
CHECKED: TDK
APPROVED: PRK
DATE: 11/18/14

0 1/2 1
IF THIS BAR DOES NOT MEASURE 1" THEN DRAWING IS NOT TO FULL SCALE

PROJECT NO.
185582

G-02
SHEET
2 OF 8

FD7000
D7000

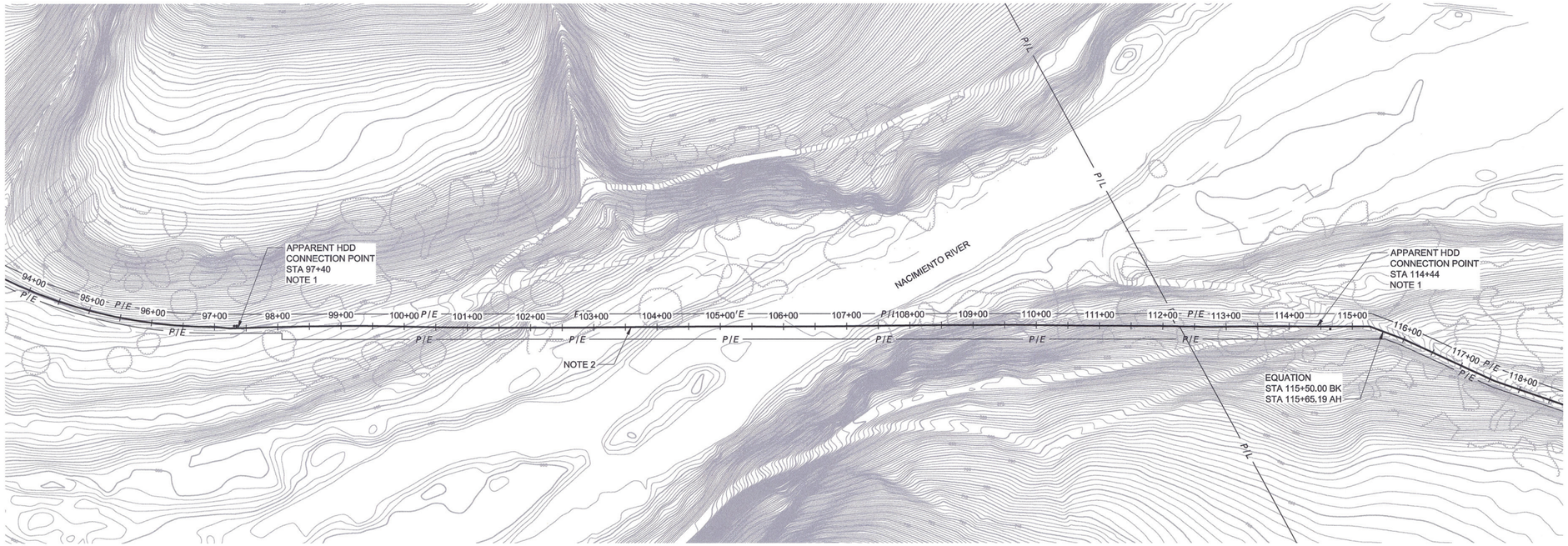

PLAN
1" = 100'-0"

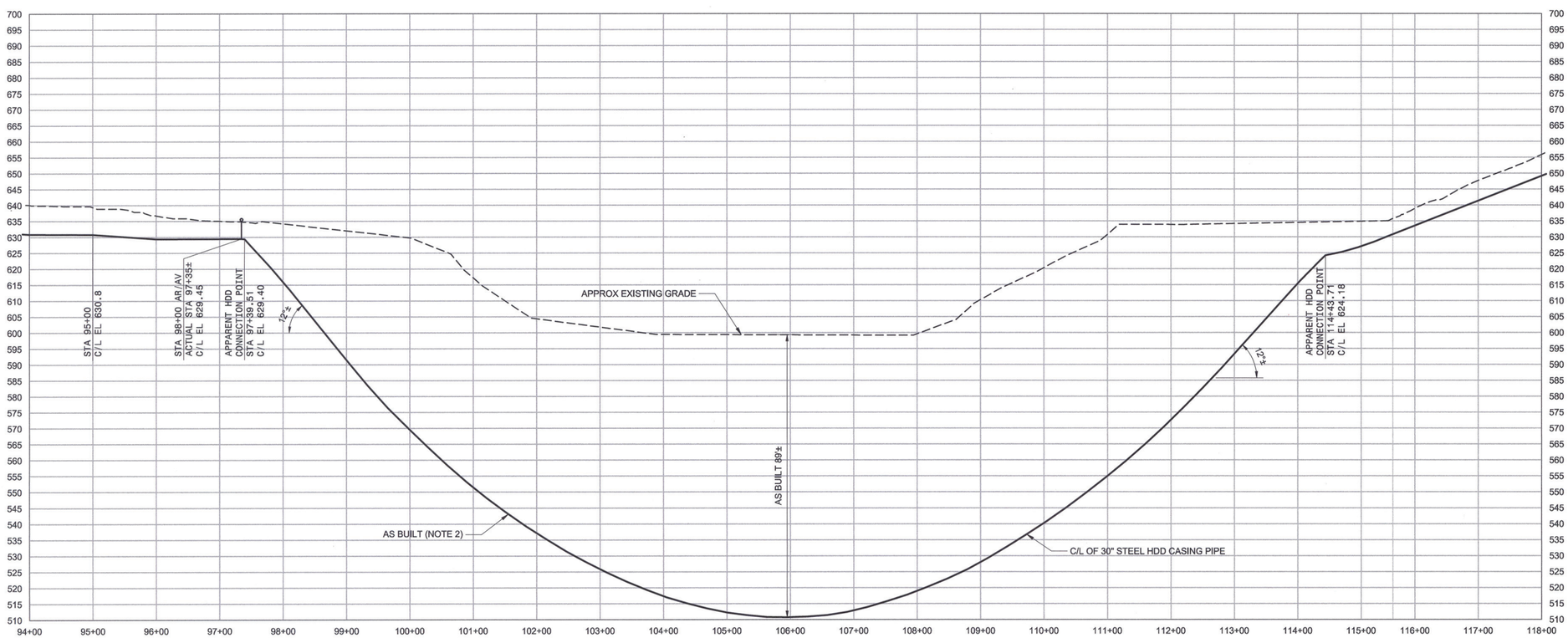

PROFILE
HOR: 1" = 100'-0"
VER: 1" = 20'-0"

NOTES:

1. HDD CONNECTION POINT BASED ON APPARENT INTERSECTION OF DIRECTIONAL BORING CENTERLINE RECORDED BY DRILLING SUBCONTRACTOR AND PIPELINE CENTERLINE UP AND DOWN STATION OF HDD RECORDED BY PIPELINE SUBCONTRACTOR.
2. HDD PIPELINE LOCATION IS BASED ON AS-BUILT CALCULATED DATA PROVIDED BY HDD SUBCONTRACTOR.

20' 10' 0 20' 40'
1"=20'

100' 50' 0 100' 200'
1"=100'

DATE	REVISIONS AND RECORD OF ISSUE	NO.	BY:	CK.	APP

PW FLDR: 185582. . . \50.3130 - Civil Drawings
PW FILE: C-01.dwg
XREF1:
XREF2:
XREF3:
XREF4:
SAVED: MCC10764, 11/18/2014 4:41:23 PM
PLOTTED: MCC10764, 11/18/2014 5:11:55 PM
USER: MCC10764
DWG VER: 1003

REGISTERED PROFESSIONAL ENGINEER
BEVINGTON, EVELYN V.
No. C 78836
Exp. 12/31/2015
STATE OF CALIFORNIA

BLACK & VEATCH
Building a world of difference.

Black & Veatch Corporation
Walnut Creek, California

SAN LUIS OBISPO COUNTY
FLOOD CONTROL AND
WATER CONSERVATION DISTRICT

NACIMIENTO RIVER CROSSING PIPE REPAIR
EXISTING HDD RIVER CROSSING
PLAN AND PROFILE

DESIGNED: EVB
DETAILED: SMM
CHECKED: TDK
APPROVED: PRK
DATE: 11/18/14

0 1/2 1
IF THIS BAR DOES NOT MEASURE 1" THEN DRAWING IS NOT TO FULL SCALE

PROJECT NO.
185582

C-01
SHEET
3 OF 8

FD7000
D7000

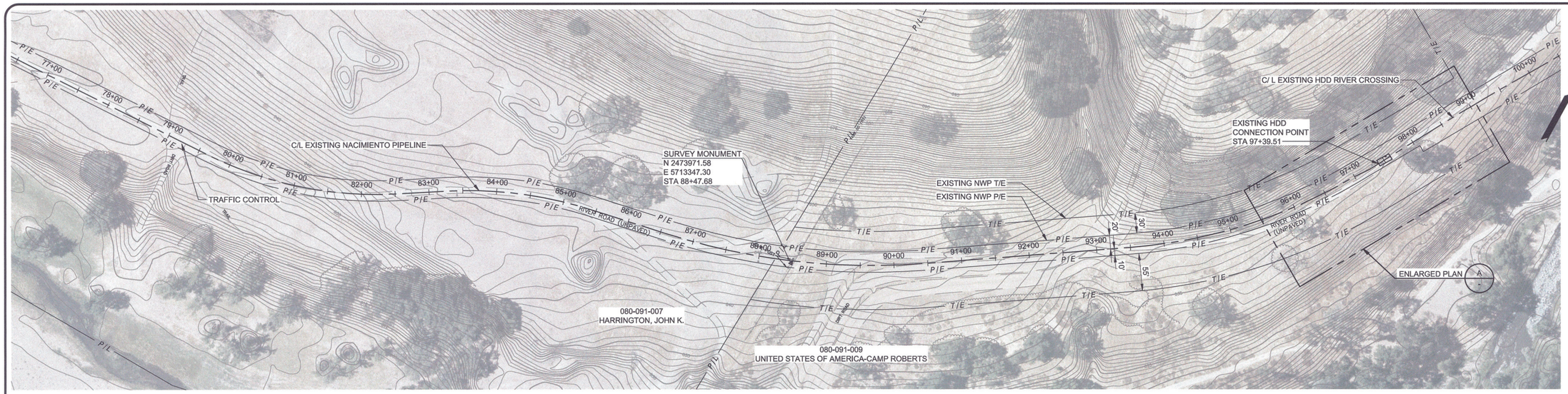

CONNECTION AREA, WESTERN END (UPSTREAM)
1" = 80'-0"

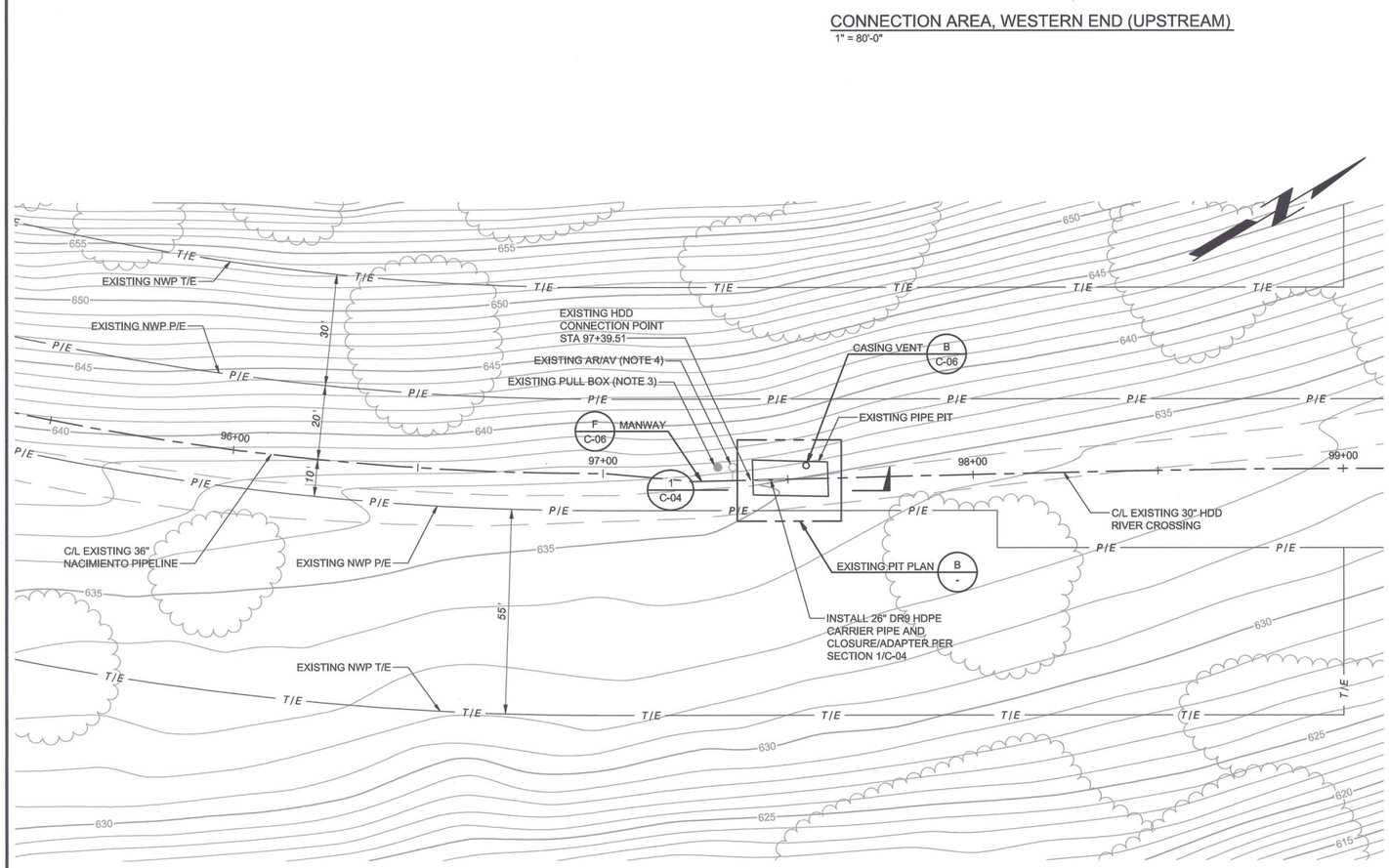

A - WESTERN CONNECTION ENLARGED PLAN
1" = 20'-0"

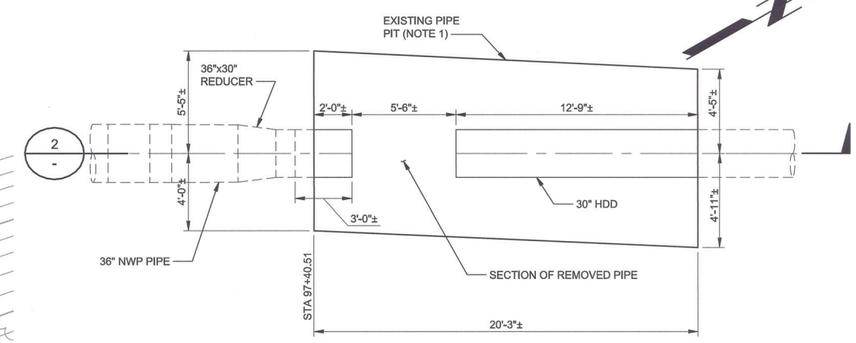

B - EXISTING PIT PLAN
1/4" = 1'-0"

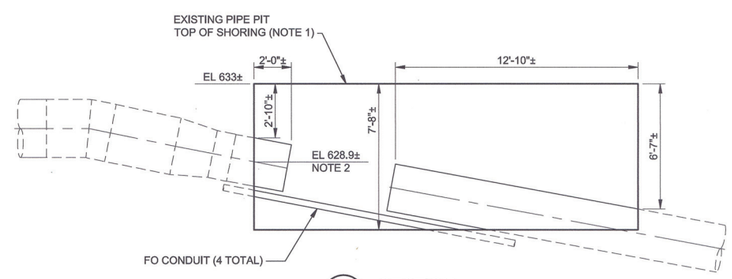

2 - SECTION
1/4" = 1'-0"

NOTES:

1. PIT DIMENSIONS ARE TO TOP AND INSIDE OF EXISTING SHORING SYSTEM BY OTHERS. DIMENSIONS ARE APPROXIMATE AND ARE BASED ON FIELD MEASUREMENTS PROVIDED BY DISTRICT. CONTRACTOR SHALL REMOVE EXISTING SHORING SYSTEM AND FURNISH ANY SHORING REQUIRED TO COMPLETE THE WORK PER SPECIFICATIONS.
2. APPROX C/L ELEVATION AS MEASURED IN PIPE PIT. HDD CONFORMED TO CONSTRUCTION RECORDS DRAWINGS INDICATE A C/L OF 629.2.
3. PROTECT EXISTING FIBER OPTIC PULL BOX, CONDUITS, CABLES, AND MARKERS IN PLACE.
4. REMOVE EXISTING AR/AV PIPING, ASSEMBLY, AND BOLLARDS AS NECESSARY FOR WORK. STORE, AND REINSTALL OR REPLACE IN ACCORDANCE WITH REQUIREMENTS OF DETAIL A/C-06 AFTER HDPE CARRIER PIPE INSTALLATION IS COMPLETED.
5. CONTRACTOR SHALL TAKE PRECAUTIONS TO NOT DAMAGE THE EXISTING NWP PIPE. VEHICLE OR EQUIPMENT VERTICAL LOADING ON SOIL WITHIN 6 FEET OF EITHER SIDE OF NWP PIPE CENTERLINE SHALL NOT EXCEED HIGHWAY H-20 LOADING.
6. TOPOGRAPHY CONTOURS IN THIS DRAWING SET ARE FOR GENERAL INFORMATION ONLY AND HAVE NOT BEEN CONFIRMED BY SURVEYOR. THESE TOPOGRAPHY CONTOURS ARE BELIEVED TO BE WITHIN PLUS OR MINUS 3 FT OF ACTUAL.

NO.	BY	CK	APP	REVISIONS AND RECORD OF ISSUE	DATE

PW FLDR: 185582 - 150.3130 - Civil Drawings
PW FILE: C-02.dwg
SAVED:
PLOTTED:
USER: MCC10764
DWG VER: 1003
XREF1:
XREF2:
XREF3:
XREF4:

REGISTERED PROFESSIONAL ENGINEER
CINDY V. BEVINGTON
No. 74000
Exp. 6/30/2015
STATE OF CALIFORNIA

BLACK & VEATCH
Building a world of difference.
Black & Veatch Corporation
Walnut Creek, California

SAN LUIS OBISPO COUNTY
FLOOD CONTROL AND
WATER CONSERVATION DISTRICT

NACIMIENTO RIVER CROSSING PIPE REPAIR
CONNECTION AREA
WESTERN END (UPSTREAM)

DESIGNED: EVB
DETAILED: SMM
CHECKED: TDK
APPROVED: PRK
DATE: 11/18/14

0 1/2 1
IF THIS BAR DOES NOT MEASURE 1" THEN DRAWING IS NOT TO FULL SCALE

PROJECT NO.
185582

C-02
SHEET
4 OF 8

F07000
D7000

CONNECTION AREA, EASTERN END (DOWNSTREAM)
1" = 80'-0"

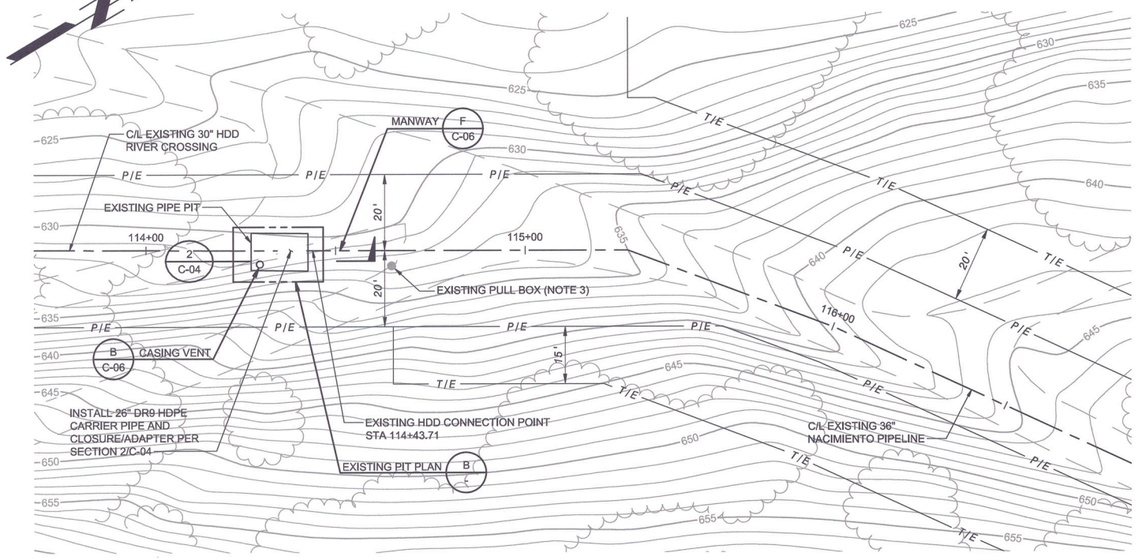

A - EASTERN CONNECTION ENLARGED PLAN
1" = 20'-0"

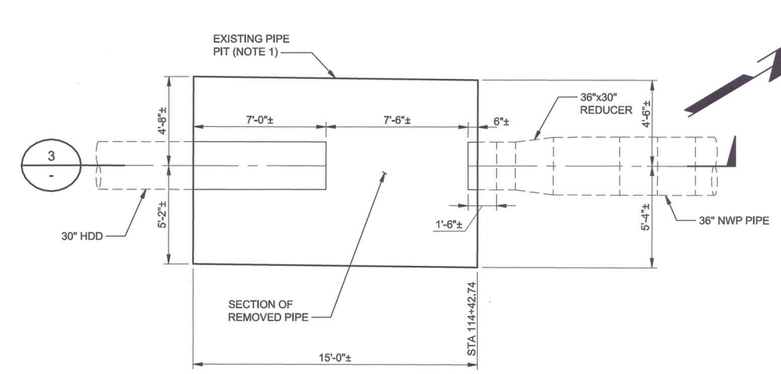

B - EXISTING PIT PLAN
1/4" = 1'-0"

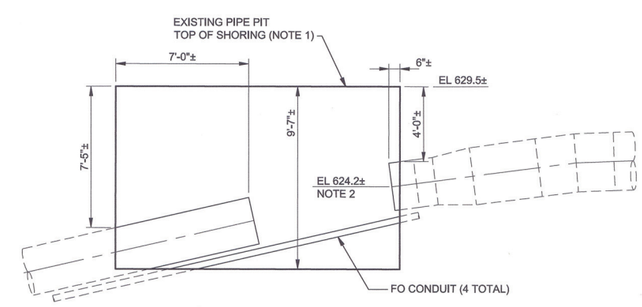

3 - SECTION
1/4" = 1'-0"

NOTES:

1. PIT DIMENSIONS ARE TO TOP AND INSIDE OF EXISTING SHORING SYSTEM BY OTHERS. DIMENSIONS ARE APPROXIMATE AND ARE BASED ON FIELD MEASUREMENTS PROVIDED BY DISTRICT. CONTRACTOR SHALL REMOVE EXISTING SHORING SYSTEM AND FURNISH ANY SHORING REQUIRED TO COMPLETE THE WORK PER SPECIFICATIONS.
2. APPROX C/L ELEVATION AS MEASURED IN PIPE PIT. HDD CONFORMED TO CONSTRUCTION RECORDS DRAWINGS INDICATE A C/L OF 624.0.
3. PROTECT EXISTING FIBER OPTIC PULL BOX, CONDUITS, CABLES, AND MARKERS IN PLACE.
4. NOTE NOT USED.
5. CONTRACTOR SHALL TAKE PRECAUTIONS TO NOT DAMAGE THE EXISTING NWP PIPE. VEHICLE OR EQUIPMENT VERTICAL LOADING ON SOIL WITHIN 6 FEET OF EITHER SIDE OF NWP PIPE CENTERLINE SHALL NOT EXCEED HIGHWAY H-20 LOADING.
6. TOPOGRAPHY CONTOURS IN THIS DRAWING SET ARE FOR GENERAL INFORMATION ONLY AND HAVE NOT BEEN CONFIRMED BY SURVEYOR. THESE TOPOGRAPHY CONTOURS ARE BELIEVED TO BE WITHIN PLUS OR MINUS 3 FT OF ACTUAL.

NO.	BY	CK	APP	REVISIONS AND RECORD OF ISSUE

DATE
PW FLDR: 185582 . . . \60.3130 - Civil Drawings
PW FILE: C-03.dwg
XREF1:
XREF2:
XREF3:
XREF4:
SAVED:
PLOTTED:
USER: MCC10784
DWG VER: 1003

REGISTERED PROFESSIONAL ENGINEER
EVAN V. BEVINGTON
No. C 78205
Exp. 9/30/2015
STATE OF CALIFORNIA
CIVIL

BLACK & VEATCH
Building a world of difference.

Black & Veatch Corporation
Walnut Creek, California

SAN LUIS OBISPO COUNTY
FLOOD CONTROL AND
WATER CONSERVATION DISTRICT

NACIMIENTO RIVER CROSSING PIPE REPAIR
CONNECTION AREA
EASTERN END (DOWNSTREAM)

DESIGNED: EVB
DETAILED: SMM
CHECKED: TDK
APPROVED: PRK
DATE: 11/18/14

0 1/2 1
IF THIS BAR DOES NOT MEASURE 1" THEN DRAWING IS NOT TO FULL SCALE

PROJECT NO.
185582

C-03
SHEET
5 OF 8

F07000
D7000

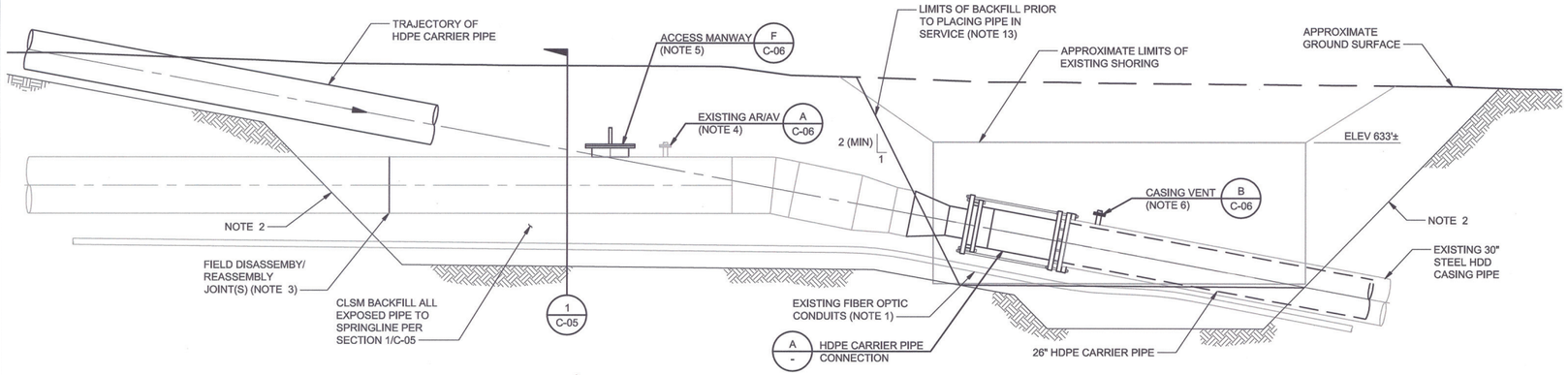

1 C-02 WESTERN CONNECTION DETAIL
1/4" = 1'-0"

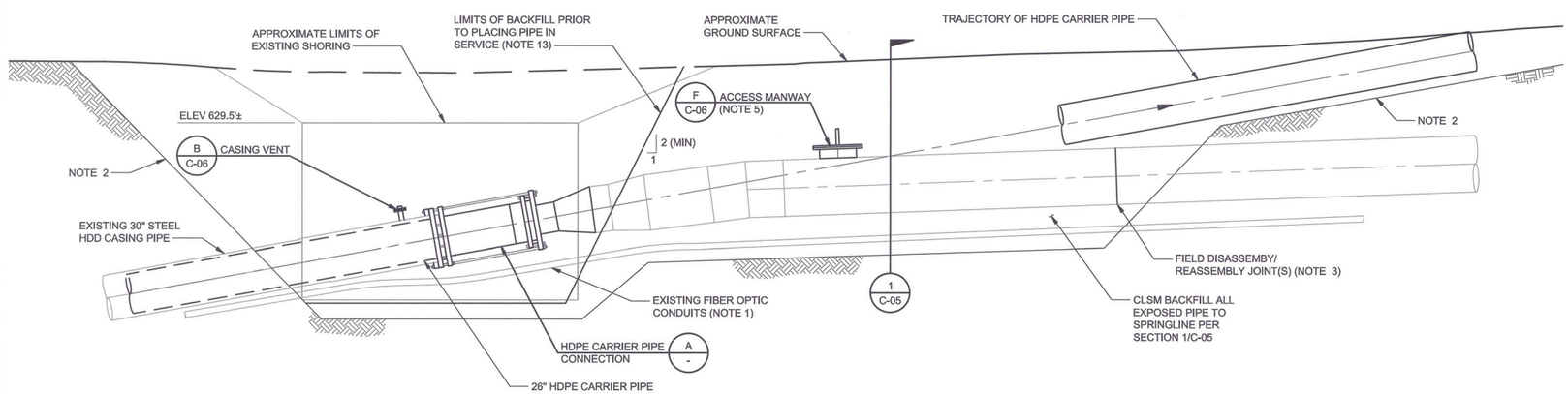

2 C-03 EASTERN CONNECTION DETAIL
1/4" = 1'-0"

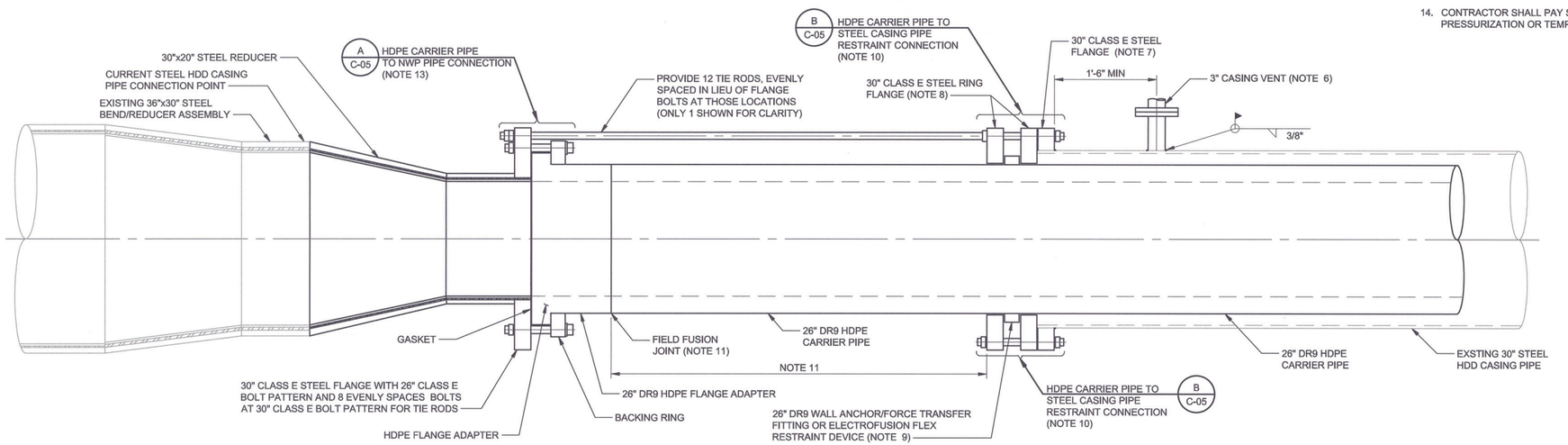

A - HDPE CARRIER PIPE CONNECTION
1" = 1'-0"

NOTES:

1. PROTECT EXISTING FIBER OPTIC CONDUITS AND PULL BOXES IN PLACE. OVER-EXCAVATE AND DEFLECT AS NECESSARY TO COMPLETE WORK. REPAIR EXISTING FIBER OPTIC HDPE CONDUIT TO GALV CONDUIT TRANSITIONS AS MUTUALLY AGREED WITH ENGINEER.
2. EXCAVATION SHOWN FOR ILLUSTRATION PURPOSES ONLY. LIMITS OF EXCAVATION SHALL BE AS REQUIRED FOR THE WORK AND AS GOVERNED BY SPECIFICATIONS, APPLICABLE REGULATIONS, AND SITE CONDITIONS.
3. CUT AND REMOVE EXISTING 36" STEEL NWP PIPE WHERE NEEDED TO CLEAR HDPE CARRIER PIPE PULL TRAJECTORY. REMOVED NWP PIPE SEGMENTS SHALL BE REPURPOSED FOR CLOSURE CONNECTION PER SPECIFICATIONS. FINAL CLOSURE JOINTS SHALL BY INSTALLING BUTTSTRAP JOINT PER DETAIL D/C-05.
4. REMOVE EXISTING AR/AV PIPING AND ASSEMBLY AS NECESSARY FOR WORK, STORE, AND REINSTALL OR REPLACE IN ACCORDANCE WITH REQUIREMENTS OF DETAIL A/C-06 AFTER HDPE CARRIER PIPE INSTALLATION IS COMPLETED.
5. COORDINATE MANWAY LOCATION WITH DISTRICT. MANWAY MAY BE INCORPORATED INTO FINAL CLOSURE JOINT IF DETAIL IS SUBMITTED AND LOCATION IS APPROVED BY DISTRICT. ENSURE MINIMUM 42" COVER OVER MANWAY FLANGE.
6. INSTALL 3" STEEL CASING VENT OUTLET AND REPAIR INTERIOR AND EXTERIOR STEEL HDD COATINGS IN KIND PRIOR TO PULLING HDPE CARRIER PIPE.
7. CUT AND SQUARE END OF EXIST STEEL HDD CASING PIPE AS NECESSARY FOR PROPER INSTALLATION OF FLANGE. AFTER COMPLETING WELD, ROUND INTERIOR EDGE OF STEEL HDD CASING PIPE TO MINIMUM 1/8" RADIUS, AND REPAIR INTERIOR AND EXTERIOR HDD COATINGS IN KIND PRIOR TO PULLING HDPE CARRIER PIPE.
8. RESTRAINING RING FLANGES SHALL HAVE AN INNER DIAMETER BORE OF NO MORE THAN ½" LARGER IN DIAMETER THAN THE OD OF THE FURNISHED 26" HDPE PIPE.
9. INSTALL MINIMUM 12 EVENLY SPACED ELECTROFUSION FLEX RESTRAINT DEVICES EACH RATED FOR A MINIMUM AXIAL THRUST CAPACITY OF 9000 LBS. ALTERNATIVELY, A 26" DR 9 WALL ANCHOR/FORCE TRANSFER FITTING WITH MINIMUM 108,000 LBS AXIAL THRUST CAPACITY MAY BE USED IN LIEU OF FLEX RESTRAINT DEVICES ON THE TAIL END OF THE HDPE CARRIER PIPE. RING FLANGE MUST BE SLIPPED ONTO PIPE PRIOR TO FUSION OF RESTRAINT FITTINGS. SPLIT FLANGES SHALL NOT BE PERMITTED.
10. HDPE CARRIER PIPE TO STEEL HDD CASING PIPE RESTRAINT CONNECTION SHALL NOT BE MADE ON AT LEAST ONE SIDE OF THE CROSSING UNTIL THE POST PULLBACK PRESSURE TEST HAS BEEN COMPLETED. THE LAST HDPE CARRIER PIPE TO STEEL HDD CASING PIPE RESTRAINT MUST BE MADE AFTER THE HDPE CARRIER PIPE HAS BEEN CONTINUOUSLY MAINTAINED AT 130 PSI BETWEEN 55 AND 70 DEGREES F FOR A MINIMUM OF 12 HOURS. THE HDPE CARRIER PIPE SHALL BE CONTINUOUSLY MAINTAINED AT THIS PRESSURE AND TEMPERATURE RANGE UNTIL THE RESTRAINT CONNECTIONS ON BOTH SIDES ARE SATISFACTORILY COMPLETED AND LOCKED DOWN. FAILURE TO MEET THESE REQUIREMENTS COULD RESULT IN EXCESSIVE THRUST AND POTENTIAL FAILURE OF A RESTRAINT.
11. FIELD FUSION JOINT OF FLANGE ADAPTER SHALL BE INSTALLED AS REQUIRED FOR PROPER STEEL CLOSURE PIPE INSTALLATION. FIELD FUSION JOINT OF FLANGE ADAPTER SHALL NOT BE CONNECTED TO THE STEEL CLOSURE PIPE UNTIL THE HDPE CARRIER TO STEEL HDD CASING PIPE RESTRAINT CONNECTION HAS BEEN SET. VERIFY FUSION MACHINE HAS ADEQUATE SPACE TO MAKE THIS JOINT PRIOR TO PULLING HDPE CARRIER PIPE. IF NECESSARY, INCREASE DISTANCE BETWEEN FIELD FUSION JOINT AND HDPE CARRIER PIPE TO STEEL HDD CASING PIPE RESTRAINT CONNECTION BY CUTTING ADDITIONAL LENGTH OFF OF THE EXISTING STEEL HDD CASING PIPE.
12. ALL BURIED OR EXPOSED METALLIC COMPONENTS, INCLUDING PIPES, FLANGES, BOLTS, AND HARDWARE, WHICH ARE NOT GALVANIZED, CEMENT MORTAR COATED, OR ASPHALTIC COMPOUND COATED SHALL BE COATED WITH LIQUID EPOXY. LIQUID EPOXY COATING SHALL BE APPLIED IN ACCORDANCE TO MANUFACTURER'S RECOMMENDED SUBSTRATE PREPARATION, PRIMING, AND COATING REQUIREMENTS. COATING SHALL BE MADE IN AT LEAST TWO COATS THAT DO NOT EXCEED MANUFACTURERS MAXIMUM RECOMMENDED COAT THICKNESS. FINAL COATING SHALL HAVE A TOTAL MINIMUM DRY FILM THICKNESS (DFT) OF THE GREATER OF 150% OF MANUFACTURER'S RECOMMENDED MINIMUM FINISHED COATING SYSTEM DFT OF 10 MILS. ANY EPOXY COATED MATERIALS THAT MAY BE EXPOSED TO SUNLIGHT SHALL BE TOP COATED WITH 2 MILLS OF ALIPHATIC POLYURETHANE. EPOXY SHALL BE SHERWIN-WILLIAMS "MACROPOXY 646" OR APPROVED EQUAL. ALIPHATIC POLYURETHANE SHALL BE SHERWIN-WILLIAMS "ACROLON 218HS" OR APPROVED EQUAL. PRIMER, IF REQUIRED, SHALL BE AS RECOMMENDED BY EPOXY MANUFACTURER. ALL BURIED METALLIC COMPONENTS SHALL ALSO BE WRAPPED WITH WAX TAPE AFTER EPOXY COATING HAS SUFFICIENTLY CURED.
13. NWP PIPELINE SYSTEM AND THE HDPE CARRIER PIPE TO NWP PIPE CONNECTION SHALL NOT BE PRESSURIZED UNTIL ALL FLANGES AND RESTRAINT RODS ARE PROPERLY INSTALLED AND THE PIPING HAS BEEN BACKFILLED PER SECTION 1/C-05 TO THE LIMITS INDICATED ON THIS DRAWING. PIPE BACKFILL WITHIN THESE LIMITS MAY BE TEMPORARILY HELD TO TOP OF PIPE IN THE AREA OF INCOMPLETE AR/AV OR MANWAY CONNECTIONS IF NEEDED. THE EXPOSED LENGTH OF TOP OF PIPE IN THESE AREAS SHALL NOT EXCEED A TOTAL OF 8 FT IN EITHER THE WESTERN OR EASTERN END CONNECTION AREAS, AS MEASURED ALONG THE TOP OF PIPE. THESE REQUIREMENTS ASSUME A 1 TO 1 EXCAVATION SLOPE ,OR STEEPER. FLATTER SLOPES SHALL DECREASE THE EXPOSED LENGTH PROPORTIONALLY.
14. CONTRACTOR SHALL PAY SPECIAL ATTENTION TO PERSONNEL SAFETY DURING ANY CHANGE IN PIPE PRESSURIZATION OR TEMPERATURE OUTSIDE OF THE STATED RANGE WHILE THE PIPE IS EXPOSED.

NO.	BY	CK.	APP	DATE	REVISIONS AND RECORD OF ISSUE

PW FLDR: 185582. . . \60.3\30 - Civil Drawings
PW FILE: C-04.dwg
XREF1:
XREF2:
XREF3:
XREF4:
SAVED:
PLOTTED:
USER: MCC10764
DWG VER: 1002

REGISTERED PROFESSIONAL ENGINEER
ERIC V. BEVING JR.
No. C 70828
Exp. 9/30/2015
CIVIL
STATE OF CALIFORNIA

BLACK & VEATCH
Building a world of difference.

Black & Veatch Corporation
Walnut Creek, California

SAN LUIS OBISPO COUNTY
FLOOD CONTROL AND
WATER CONSERVATION DISTRICT

NACIMIENTO RIVER CROSSING PIPE REPAIR
CONNECTION DETAILS

DESIGNED: EVB
DETAILED: SMM
CHECKED: TDK
APPROVED: PRK
DATE: 11/18/14

0 1/2 1
IF THIS BAR DOES NOT MEASURE 1" THEN DRAWING IS NOT TO FULL SCALE

PROJECT NO.
185582

C-04
SHEET
6 OF 8

F07000
D7000

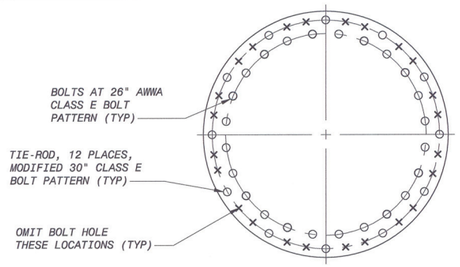

BOLT PATTERN

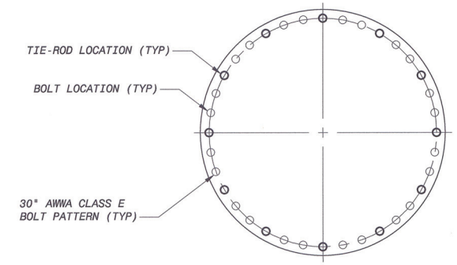

BOLT PATTERN

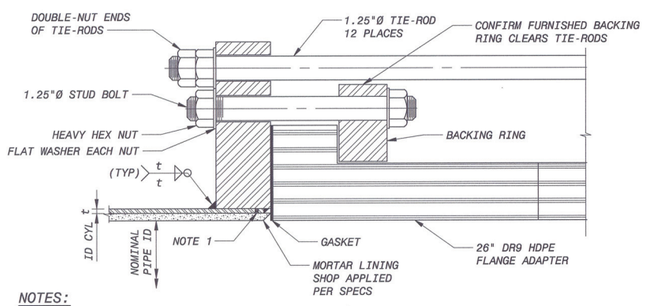

NOTES:

1. FLANGE SHALL BE SHOP INSTALLED AND TESTED PER SPECS.
2. APPLY PRIME COAT PRIOR TO ASSEMBLY.SEE DWG C-04 FOR REQUIRED FINISHED COATING. BURIED STEEL COMPONENTS SHALL RECEIVED WAX TAPE WRAP.
3. SEE SPECIFICATIONS FOR FOR BOLT, WASHER, AND NUT MATERIAL.

A / - HDPE CARRIER PIPE TO NWP CONNECTION
NO SCALE

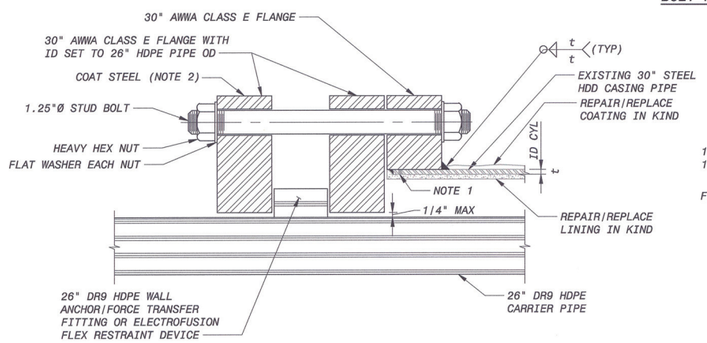

AT REGULAR BOLT LOCATIONS

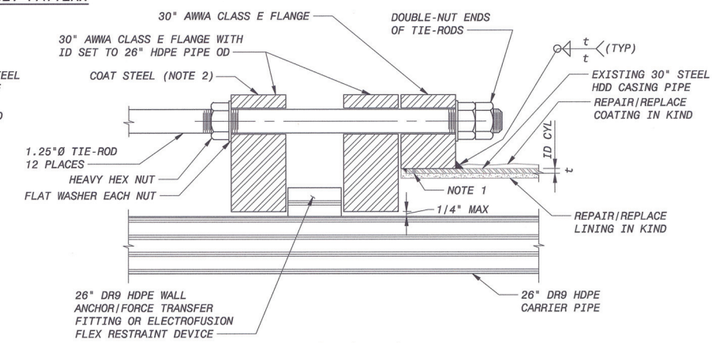

AT TIE-ROD LOCATION

NOTES:

1. DRILL AND TAP CYLINDER FOR 1/4" HOLE BEFORE WELDING. CONTRACTOR SHALL AIR AND SOAP TEST AFTER WELDING IS COMPLETE. PLUG WELD HOLES AFTER SUCCESSFUL COMPLETION OF JOINT TEST. USE 2 HOLES 180° APART FROM FLANGE.
2. APPLY PRIME COAT PRIOR TO ASSEMBLY.SEE DWG C-04 FOR REQUIRED FINISHED COATING. BURIED STEEL COMPONENTS SHALL RECEIVED WAX TAPE WRAP.
3. SEE SPECIFICATIONS FOR FOR BOLT, WASHER, AND NUT MATERIAL.
4. SEE DWG C-04 FOR ADDITIONAL REQUIREMENTS.

B / - HDPE CARRIER PIPE TO STEEL CASING PIPE RETRAINT CONNECTION
NO SCALE

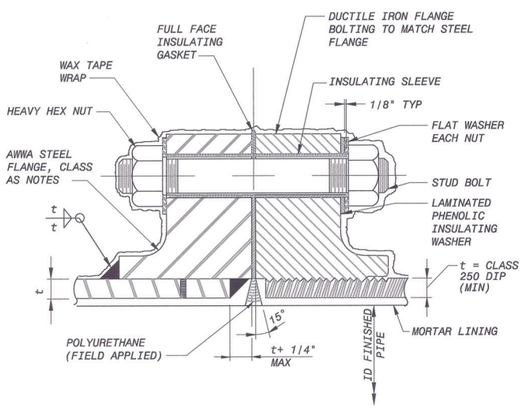

NOTES:

1. BURIED FLANGE INSULATING JOINTS SHALL BE COATED WITH A WAX TAPE COATING SYSTEM CONSISTING OF THE FOLLOWING:

   WAX TAPE PRIMER APPLIED ON ALL EXPOSED SURFACES OF FLANGE, BOLTS AND NUTS.

   WAX TAPE WRAPPED WITH ONE 1" OVERLAP ON PREVIOUSLY PRIMED SURFACES.

2. WAX TAPE COATING SHALL OVERLAP PIPE COATING A MINIMUM OF 4".

C / - INSULATING FLANGE STL TO DIP
NO SCALE

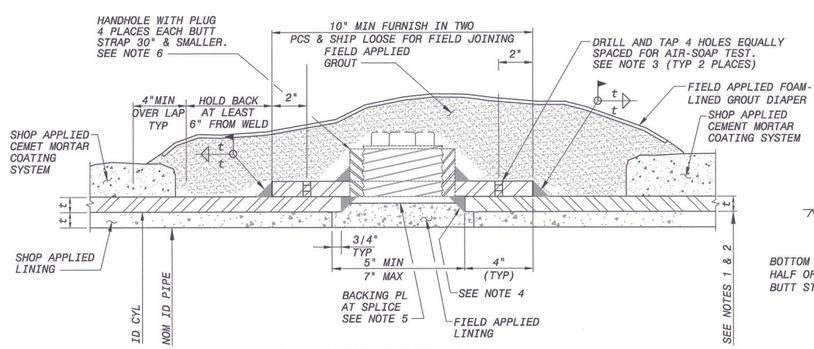

BUTT STRAP JOINT

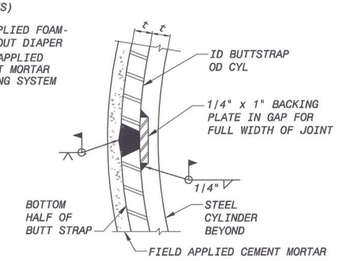

BUTT STRAP SPLICE

NOTES:

1. FOR INSIDE DIAMETER AND PIPE THICKNESS FOR WELDED STEEL PIPE AND LOCATION OF THRUST RESTRAINT WHICH REQUIRE WELDED LAP JOINTS SEE PLAN AND PROFILE DRAWINGS.
2. t INDICATES THE THICKNESS OF THE STEEL PIPE AT THE STATION WHERE USED.
3. BEFORE WELDING, DRILL AND TAP NUMBER OF HOLES AS NOTED, FOR 1/4" NPT PIPE. AIR AND SOAP TEST AFTER WELDING IS COMPLETED, PLUG WELD HOLES AFTER SUCCESSFUL COMPLETION OF JOINT TESTS.
4. A TIGHT JOINT IS REQUIRED BEFORE WELDING. SEE SPECIFICATIONS FORTOLERANCES.
5. BEVEL ENDS OF BACKING PLATE AT BUTT-STRAP PRIOR TO WELDING, OR BACKGOUGE AT CONTACT WITH ADJACENT CYLINDER PRIOR TO COMPLETING INSIDE FILLET WELD.
6. OKAY TO OMIT HANDHOLES IF INTERIOR LINING CAN BE ACCESSED AND REPAIRED FROM INSIDE PIPE.

D / - BUTT STRAP JOINT
NO SCALE

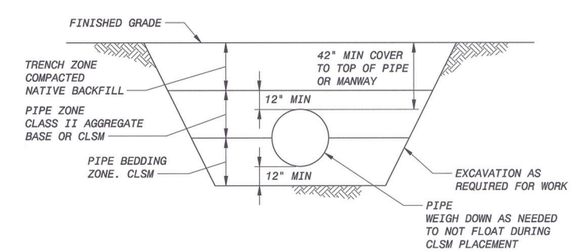

1 / C-04 PIPE TRENCH/EXCAVATION BACKFILL
NO SCALE

NO.	BY	CK	APP

REVISIONS AND RECORD OF ISSUE

DATE

PW FLDR: 185582 ...\90.3010 - General Drawings
PW FILE: G-01.dwg
XREF1:
XREF2:
XREF3:
XREF4:
SAVED: MCC10764, 11/18/2014 5:30:38 PM
PLOTTED: MCC10764, 11/18/2014 6:12:43 PM
USER: MCC10764
DWG VER: 1001

REGISTERED PROFESSIONAL ENGINEER — STATE OF CALIFORNIA — CIVIL — Exp. 6/30/2015

BLACK & VEATCH
Building a world of difference.

Black & Veatch Corporation
Walnut Creek, California

SAN LUIS OBISPO COUNTY
FLOOD CONTROL AND
WATER CONSERVATION DISTRICT

NACIMIENTO RIVER CROSSING PIPE REPAIR
MISCELLANEOUS DETAILS

DESIGNED: EVB
DETAILED: SMM
CHECKED: TDK
APPROVED: PRK
DATE: 11/18/14

0 1/2 1
IF THIS BAR DOES NOT MEASURE 1" THEN DRAWING IS NOT TO FULL SCALE

PROJECT NO.
B&V 185582

C-05
SHEET
7 OF 8

F07000
D7000

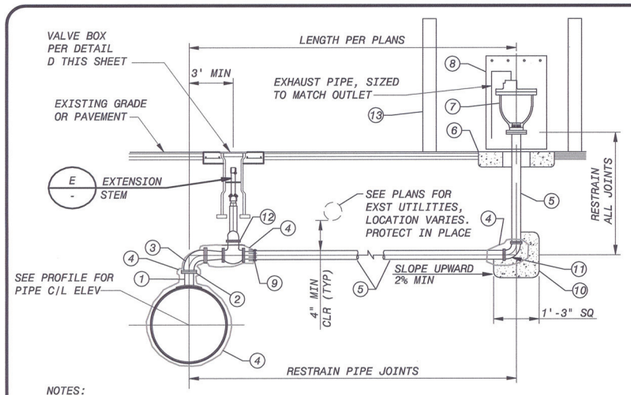

INSTALLATION NOTES:

1. * 3" CML&CMC STEEL OUTLET, tmin=1/4"
2. * INSULATING FLANGE PER DETAIL C/C-05.
3. * 3" DIP 90° BEND, FLANGED, CLASS 350. WRAP WITH WAX TYPE. (MJxFL OPTIONAL)
4. WRAP WITH POLYETHYLENE ENCASEMENT PER SPECIFICATIONS.
5. 3" DIP, CLASS 350.
6. CONCRETE PAD PER DETAIL C THIS SHEET.
7. * 3" CLASS 350 COMBINATION AIR VALVE ASSEMBLY PER GENERAL NOTES.
8. * AIR VALVE ENCLOSURE PER DETAIL C THIS SHEET.
9. * FLANGED COUPLING ADAPTER, RESTRAINED. WRAP WITH WAX TAPE.
10. CONCRETE ANCHOR BLOCK, USE 2500 PSI CONCRETE. (BEARING AREA=2 SQ FT)
11. 3" DIP 90° BEND, FLANGED, CLASS 350. WRAP WITH WAX TAPE. (MJ x MJ OPTIONAL)
12. * 3" GATE VALVE.
13. PROTECTION BOLLARD. REPLACE IN KIND.

NOTES:

1. ITEMS DENOTED WITH AN "*" MAY BE REUSED. ALL OTHER ITEMS SHALL BE FURNISHED NEW.
2. WAX TAPE COAT ALL FLANGES, NUTS, AND BOLTS. APPLY POLYETHYLENE SHEET ENCASEMENT PER SPECIFICATIONS.
3. UNLESS NOTED OTHERWISE ON PLANS, (7) SHALL BE 3" FOR PIPE > 24" DIA

A - AR/AV
NO SCALE

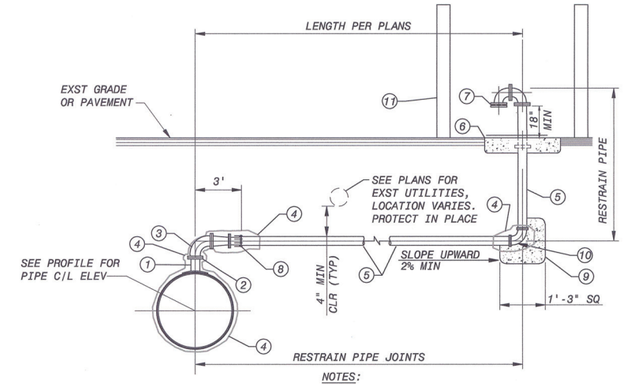

INSTALLATION NOTES:

1. 3" CML&CMC STEEL OUTLET, tmin=1/4"
2. INSULATING FLANGE PER DETAIL C/C-05.
3. 3" DIP 90° BEND, FLANGED, CLASS 350. WRAP WITH WAX TYPE. (MJxFL OPTIONAL)
4. WRAP WITH POLYETHYLENE ENCASEMENT PER SPECIFICATIONS.
5. 3" DIP, CLASS 350.
6. CONCRETE PAD PER DETAIL C THIS SHEET.
7. FLANGED W/ TYPE 304 SS 24 MESH INSECT SCREEN.
8. FLANGED COUPLING ADAPTER, RESTRAINED. WRAP WITH WAX TAPE.
9. CONCRETE ANCHOR BLOCK, USE 2500 PSI CONCRETE. (BEARING AREA=2 SQ FT)
10. 3" DIP 90° BEND, FLANGED, CLASS 350. WRAP WITH WAX TAPE. (MJ x MJ OPTIONAL)
11. PROVIDE 4 BOLLARDS. MATCH BOLLARDS AT EXISTING AR/AV ON WESTERN SIDE OF CROSSING.

NOTES:

1. WAX TAPE COAT ALL FLANGES, NUTS, AND BOLTS. APPLY POLYETHYLENE SHEET ENCASEMENT PER SPECIFICATIONS.
2. UNLESS NOTED OTHERWISE ON PLANS, (7) SHALL BE 3" FOR PIPE > 24" DIA

B - CASING VENT
NO SCALE

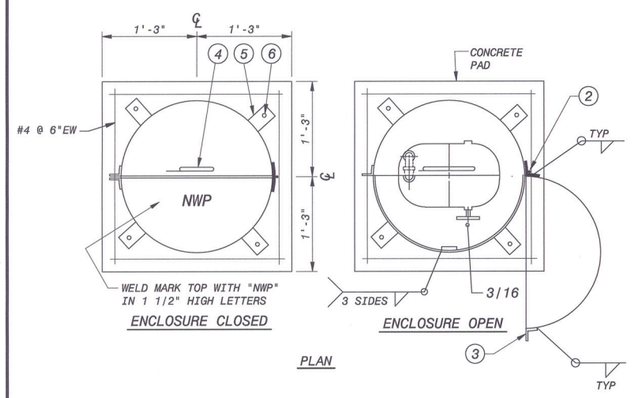

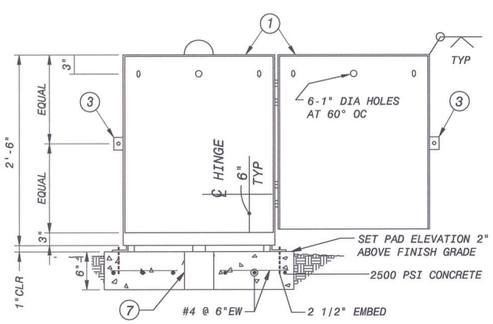

CONSTRUCTION NOTES:

1. FABRICATE 24" OD x 10 GAUGE STEEL ENCLOSURE. THE AIR VALVE ENCLOSURES SHALL BE HOT-DIP GALVANIZED.
2. 4" x 4" HEAVY DUTY STAINLESS STL BLANK SURFACE HINGE - TYPICAL 4.
3. 1-1/2" x 1-1/2" x 1/4" STEEL ANGLE, 2" WIDE WITH 1/2" HOLE - TYPICAL 2.
4. 1/2" DIA STL LIFTING EYE WITH 2" RADIUS.
5. 3" x 3" x 1/4" STL ANGLE, 3" WIDE WITH 5/8" HOLE - TYPICAL OF 4 AT 90° OC.
6. 1/2"Ø SS EXP BOLTS.
7. BLOCKOUT IN PAD TO SUIT RISER PIPE DIA. FILL VOIDS WITH CRUSHED ROCK.

NOTES:

1. WAX TAPE COAT ALL FLANGES, NUTS, AND BOLTS. APPLY POLYETHYLENE SHEET ENCASEMENT PER SPECIFICATIONS.

C - AIR VALVE ENCLOSURE
NO SCALE

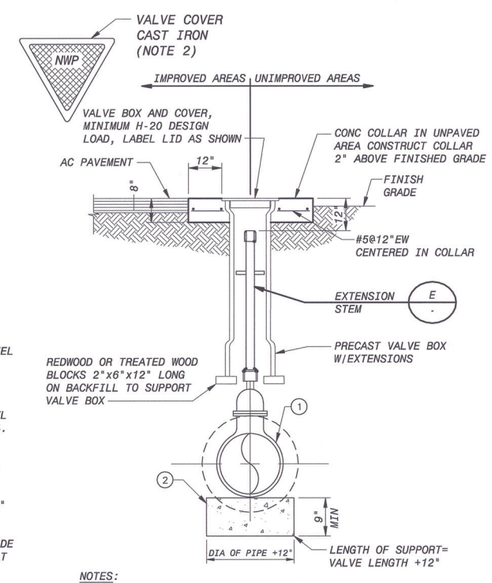

NOTES:

1. WAX TAPE COAT ALL FLANGES, NUTS, AND BOLTS AND APPLY POLYETHYLENE SHEET ENCASEMENT.
2. COAT COVER ALL SIDES PER GENERAL NOTES.

CONSTRUCTION NOTES:

1. CONSTRUCT RW GV WITH OPERATOR NUT AND VALVE BOX.
2. CONSTRUCT CONCRETE SUPPORT. USE 1500 PSI CONCRETE.

D - BURIED GATE VALVE
NO SCALE

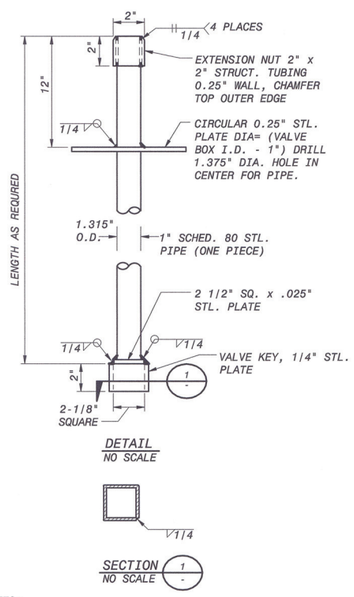

NOTES:

1. LENGTH OF EXTENSION IN INCHES SHALL BE INSCRIBED WITH AN ARC WELD BEAD (MIN. OF 2" IN HEIGHT) ON TOP FACE OF CIRCULAR PLATE.
2. VALVE KEY SHALL FIT OVER STANDARD 2" VALVE OPERATING NUT.
3. EXTENSION NUT AND VALVE KEY TO BE IN ALIGNMENT WITH EACH OTHER.
4. PAINT EXTENSION STEM PER GENERAL NOTES.

E - EXTENSION STEM
NO SCALE

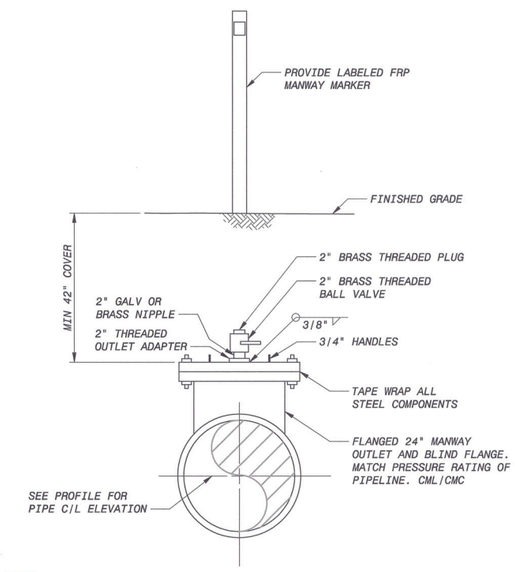

NOTES:

1. COAT EXTERIOR METALLIC COMPONENTS AND WRAP WITH WAX TAPE PER NOTE 12 DWG C-04.
2. ALL WETTED STEEL THAT IS NOT CEMENT MORTAR COATED SHALL BE COATED WITH 3 COATS OF LIQUID EPOXY. COATING SHALL BE MADE IN ACCORDANCE TO MANUFACTURER'S RECOMMENDED SUBSTRATE PREPARATION REQUIREMENTS WITH BLAST CLEANING TO AT LEAST SSPC-SP10 WITH THE FIRST COATING APPLICATION MADE THE SAME DAY. COATING SHALL BE MADE IN AT LEAST THREE COATS THAT DO NOT EXCEED MANUFACTURERS MAXIMUM RECOMMENDED COAT THICKNESS. FINAL COATING SHALL HAVE A TOTAL MINIMUM DRY FILM THICKNESS OF THE GREATER OF 150% OF MANUFACTURER'S RECOMMENDED MINIMUM FINISHED COATING SYSTEM DFT OR 15 MILS. EPOXY SHALL BE NSF CERTIFIED SHERWIN-WILLIAMS "MACROPOXY 646" OR APPROVED EQUAL. PRIMER, IF REQUIRED, SHALL BE AS RECOMMENDED BY EPOXY MANUFACTURER.
3. ALL COMPONENTS SHALL HAVE RATED WORKING PRESSURE OF AT LEAST 1.5 X PIPE CLASS.

F - 24" ACCESS MANWAY
NO SCALE

DATE	REVISIONS AND RECORD OF ISSUE	NO.	BY	CK	APP

PW FLDR: 185582....\50.3010 - General Drawings
PW FILE: G-01.dwg
SAVED:
PLOTTED:
USER: WCC10764
XREF1:
XREF2:
XREF3:
XREF4:
DWG VER: 1001

REGISTERED PROFESSIONAL ENGINEER A. BEVINGTON No. C 79838 Exp 9/30/2015 STATE OF CALIFORNIA CIVIL

BLACK & VEATCH
Building a world of difference.
Black & Veatch Corporation
Walnut Creek, California

SAN LUIS OBISPO COUNTY
FLOOD CONTROL AND
WATER CONSERVATION DISTRICT

NACIMIENTO RIVER CROSSING PIPE REPAIR
MISCELLANEOUS DETAILS

DESIGNED: EVB
DETAILED: SMM
CHECKED: TDK
APPROVED: PRK
DATE: 11/18/14

0 1/2 1
IF THIS BAR DOES NOT MEASURE 1" THEN DRAWING IS NOT TO FULL SCALE

PROJECT NO.
B&V 185582

C-06
SHEET
8 OF 8

F07000
D7000