FOR REDUCED PLANS
ORIGINAL SCALE IS IN INCHES 0 1 2 3

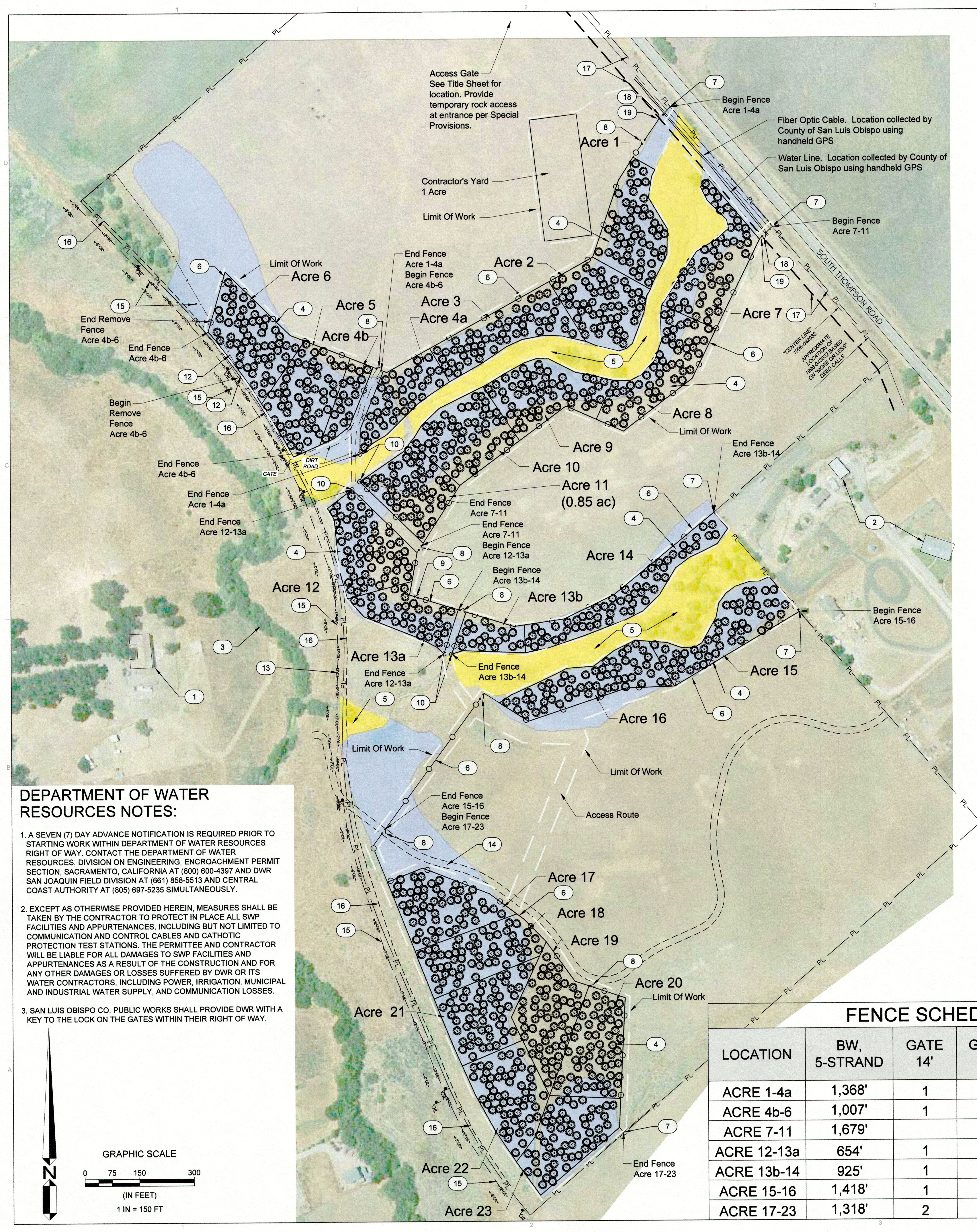

DEPARTMENT OF WATER RESOURCES NOTES:

1. A SEVEN (7) DAY ADVANCE NOTIFICATION IS REQUIRED PRIOR TO STARTING WORK WITHIN DEPARTMENT OF WATER RESOURCES RIGHT OF WAY. CONTACT THE DEPARTMENT OF WATER RESOURCES, DIVISION ON ENGINEERING, ENCROACHMENT PERMIT SECTION, SACRAMENTO, CALIFORNIA AT (800) 600-4397 AND DWR SAN JOAQUIN FIELD DIVISION AT (661) 858-5513 AND CENTRAL COAST AUTHORITY AT (805) 697-5235 SIMULTANEOUSLY.

2. EXCEPT AS OTHERWISE PROVIDED HEREIN, MEASURES SHALL BE TAKEN BY THE CONTRACTOR TO PROTECT IN PLACE ALL SWP FACILITIES AND APPURTENANCES, INCLUDING BUT NOT LIMITED TO COMMUNICATION AND CONTROL CABLES AND CATHOTIC PROTECTION TEST STATIONS. THE PERMITTEE AND CONTRACTOR WILL BE LIABLE FOR ALL DAMAGES TO SWP FACILITIES AND APPURTENANCES AS A RESULT OF THE CONSTRUCTION AND FOR ANY OTHER DAMAGES OR LOSSES SUFFERED BY DWR OR ITS WATER CONTRACTORS, INCLUDING POWER, IRRIGATION, MUNICIPAL AND INDUSTRIAL WATER SUPPLY, AND COMMUNICATION LOSSES.

3. SAN LUIS OBISPO CO. PUBLIC WORKS SHALL PROVIDE DWR WITH A KEY TO THE LOCK ON THE GATES WITHIN THEIR RIGHT OF WAY.

FENCE SCHEDULE

LOCATION	BW, 5-STRAND	GATE 14'	GATE 10'	GATE 16'	BW, REMOVED
ACRE 1-4a	1,368'	1		1	
ACRE 4b-6	1,007'	1			181'
ACRE 7-11	1,679'			1	
ACRE 12-13a	654'	1	1		
ACRE 13b-14	925'	1			
ACRE 15-16	1,418'	1			
ACRE 17-23	1,318'	2			

LEGEND

1	EXISTING DANA ADOBE
2	EXISTING PRIVATE RESIDENCE
3	EXISTING NIPOMO CREEK
4	OAK MITIGATION AREAS
5	RIPARIAN RESTORATION BY LAND CONSERVANCY- NO CONSTRUCTION DISTURBANCE
6	BARBED WIRE FENCE, SEE DETAILS 3 & 4, THIS SHEET
7	ATTACH NEW FENCE TO EXISTING FENCE
8	14' WIDE GATE - SEE DETAIL 3, THIS SHEET
9	10' WIDE GATE - SIMILAR TO DETAIL 3, THIS SHEET
10	END FENCE
11	NOT USED
12	REMOVE EXISTING BARBED WIRE FENCE, APPROXIMATELY 675'
13	EXISTING GATE - MAINTAIN ACCESS TO GATE
14	PROPOSED FUTURE DANA ADOBE ROAD LOCATION - N.I.C.
15	EXISTING GAS COMPANY EQUIPMENT - PROTECT IN PLACE
16	25' SETBACK LINE FROM EXISTING GAS COMPANY PIPELINE
17	STATE WATERLINE EASEMENT
18	16' WIDE GATE AT DWR RIGHT OF WAY EASEMENT
19	TRAFFIC WARNING SIGN - LOCATE OUTSIDE OF DWR RIGHT OF WAY AND FACE TOWARD ONCOMING TRAFFIC

PLANT SCHEDULE

TREES	BOTANICAL NAME / COMMON NAME	CONT	QTY
(symbol)	Quercus agrifolia / Coast Live Oak Symbol represents one acorn plot with three individually planted acorns	Acorn	3,824

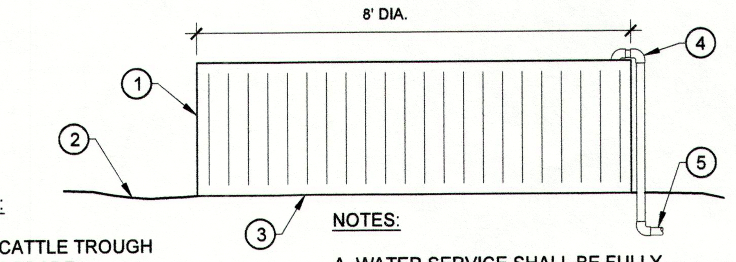

LEGEND:

1. 8' DIA CATTLE TROUGH
2. FINISH GRADE
3. GRADE LEVEL PAD 8 FOOT DIA FOR TROUGH
4. AUTO-FILL WATER SYSTEM
5. BURY WATER SERVICE PIPE 18" DEEP MINIMUM

NOTES:

A. WATER SERVICE SHALL BE FULLY FUNCTIONING AND AUTOMATIC AT COMPLETION OF INSTALLATION
B. RELOCATE CATTLE TROUGH PER THIS DETAIL AND THE SPECIAL PROVISIONS

1 CATTLE TROUGH
N.T.S.

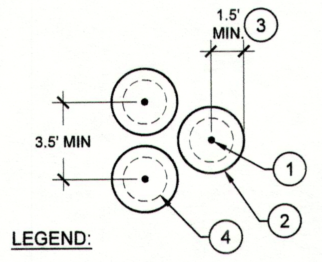

LEGEND:

1. ACORN PLANTING LOCATION (3 ACORNS EACH PLANTING PLOT)
2. EDGE OF AREA CLEARED OF VEGETATION
3. 1.5 FOOT MINIMUM SPACING BETWEEN CENTER OF AUGER HOLE AND OUTER EDGE OF CLEARED AREA
4. 24" AUGER HOLE

2 ACORN PLANTING
N.T.S.

PLANTING NOTES

1. REFER TO PLANTING PLANS, PLAN NOTES, PLANT SCHEDULE, AND PLANTING SPECIFICATION FOR ADDITIONAL PLANTING INFORMATION. REFER TO IRRIGATION PLANS, NOTES AND DETAILS FOR RELATED LANDSCAPE WORK.

2. NOTIFY OWNER'S REPRESENTATIVE (REP.) 48 HOURS MINIMUM PRIOR TO COMMENCEMENT OF WORK TO COORDINATE PROJECT INSPECTION SCHEDULE.

3. VERIFY ALL EXISTING CONDITIONS, DIMENSIONS AND ELEVATIONS BEFORE PROCEEDING WITH THE WORK. IMMEDIATELY NOTIFY OWNER'S REPRESENTATIVE OF FIELD CONDITIONS THAT VARY FROM THOSE SHOWN ON DRAWINGS AND SEEK CORRECTIONS AND DIRECTIONS BEFORE PROCEEDING WITH WORK. ASSUME FULL RESPONSIBILITY FOR ALL NECESSARY CORRECTIONS DUE TO FAILURE TO REPORT KNOWN DISCREPANCIES.

4. LOCATE AND MARK ALL EXISTING IRRIGATION LINES AND OTHER UTILITIES WHETHER SHOWN HEREON OR NOT. PROTECT FROM DAMAGE ALL UTILITIES, AREAS AND STRUCTURES IN AND AROUND LANDSCAPE WORK AREAS. ASSUME FULL RESPONSIBILITY AND EXPENSE FOR REPAIR AND REPLACEMENT OF DAMAGES CAUSED BY CONTRACTOR.

5. LOCATION OF EXISTING ELEMENTS SUCH AS GENERATOR, PUMP, TANKS, AND OTHER STRUCTURES OR ELEMENTS ARE APPROXIMATE. CONTRACTOR SHALL VERIFY FIELD CONDITIONS WHETHER SHOWN HEREON OR NOT. WHEN SHOWN ITEMS DO NOT CORRESPOND TO FIELD CONDITIONS, REPORT DISCREPANCIES TO OWNER'S REP. FOR CLARIFICATIONS AND INSTRUCTIONS PRIOR TO PROCEEDING WITH WORK.

6. PLANTING ACCESSORIES & MATERIAL:

A. TREE TUBE: 3" DIAMETER, 17" HEIGHT, BLUE-X OR EQUAL. SECURE TO 1" X 1" X 30" WOOD STAKE WITH MINIMUM TWO (2) HEAVY DUTY STEEL STAPLES.
B. ROOT PROTECTORS: PREFABRICATED ROOT PROTECTORS - CONFORM TO SPECIAL PROVISIONS.
C. MULCH: SHREDDED BARK MULCH. SUBMIT SAMPLE FOR APPROVAL.

7. PRE-PLANTING PREPARATION:

A. PREPARE PLANTING HOLE BY REMOVING ALL VEGETATION WITHIN A THREE FOOT DIAMETER OF THE PLANTING HOLE USING A McCLOUD OR EQUAL POWER TILLER.
B. AN APPROXIMATELY 24" DEEP PLANTING HOLE MUST BE AUGURED IN THE CENTER OF THE 3' DIAMETER PLANTING PLOT. INSTALL THE ROOT CAGE AND RETURN AUGURED SOIL TO HOLE. PLACE ACORNS 2" BELOW FINISHED GRADE.
C. MINIMIZE DISTURBANCE OF SURROUNDING EXISTING SOIL.

8. PLANTS: OAK ACORNS ARE SHOWN IN GROUPS OF THREE ON THE PLAN. EACH ACORN SHALL BE PLANTED IN ITS OWN HOLE AND EACH SHALL HAVE TREE PROTECTION LISTED IN NOTE 6 ABOVE. SEE SPECIAL PROVISIONS FOR ADDITIONAL INFORMATION.

9. PLANTING:

A. GROUP TREES IN THREES BUT PLANT EACH ACORN WITH A ROOT CAGE AND A TREE TUBE IN ITS OWN HOLE, SEE ACORN PLANTING DETAIL 2, THIS SHEET.
B. PURPLE NEEDLE GRASS (NASSELA PULCHRA) AND SMALL FESCUE (VULPIA MICROSTACHYS) GRASS SEED MUST BE BROADCAST IN THE OAK TREE PLANTING PLOT (EACH GROUP OF THREE ACORNS). SEED SHALL BE APPLIED AT 15 LBS PER ACRE WITH SEED MIXED 50/50.
B. IRRIGATE PLANTING PITS TO BRING TOP 6" OF SOIL TO FIELD CAPACITY.
C. INSTALL 3" DEEP CONIFEROUS BARK MULCH OVER THE GRASS SEED AND DISTURBED SOIL IN THE PLANTING PLOT.

10. COASTAL SCRUB SEEDING NOTES:

A. 650 RANDOMLY DISTRIBUTED COASTAL SCRUB SEEDING PLOTS MUST BE INSTALLED. LOCATIONS WILL BE FLAGGED OR STAKED IN THE FIELD BY THE COUNTY ENGINEER.
B. EACH SEEDING PLOT MUST BE A MINIMUM OF 3' IN DIAMETER.
C. ALL EXOTIC VEGETATION WITHIN SEEDING PLOT MUST BE MANUALLY REMOVED WITH A McCLOUD OR EQUAL POWER TILLER.
D. THE SEED MIX PROVIDED IN THE COASTAL SCRUB PLOTS SEED TABLE MUST BE APPLIED AT THE RATE INDICATED IN THE TABLE TO THE SEEDING PLOTS, SEE SPECIAL PROVISIONS. AFTER SEEDING APPLY 1" DEEP CONIFEROUS BARK MULCH TO THE SEEDING PLOT.

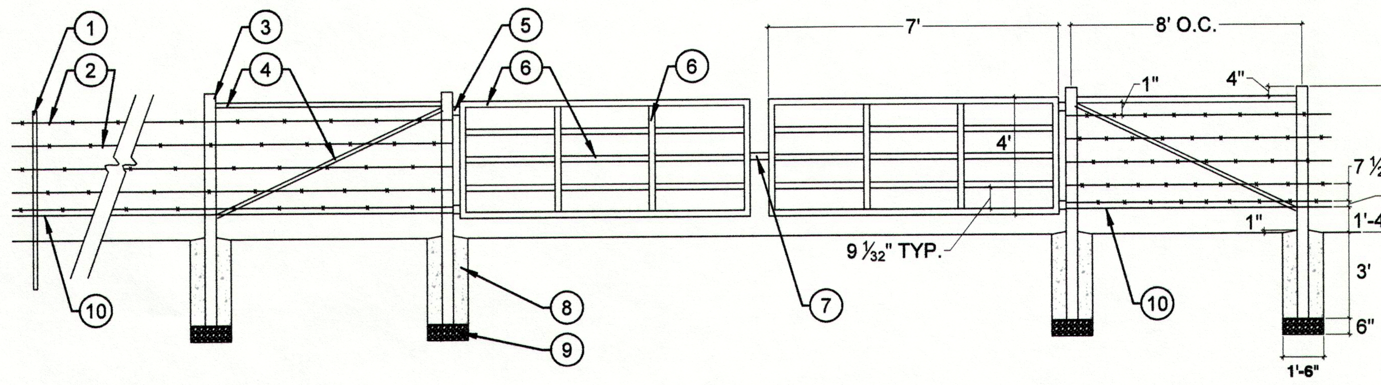

LEGEND:

1. 7' HEAVY DUTY 133 "T" POST @ 10' O.C. MAX.
2. HIGH TENSILE, 4-POINT BARBED WIRE @ 7 ½" O.C. SPACING STARTING AT 18" ABOVE GRADE
3. 7' SCH 40 GALV. PIPE POST TYP.
4. 1.5" SCH 40 GALV. PIPE
5. HEAVY DUTY GREASABLE HINGE, TYP.
6. 2' SCH 40 GALV PIPE FRAME AND CROSS MEMBERS
7. ½" CHAIN WITH OMEGA PACIFIC ½" STEEL STD. D NFPA SCREW-LOX CARABINER
8. CONCRETE FOOTING
9. GRAVEL BASE
10. SMOOTH BOTTOM WIRE TO BE 16" ABOVE GRADE

NOTE:

A. COAT ALL WELDS WITH COLD-GALVANIZING COMPOUND
B. ALL CHANGES IN DIRECTION SHALL RECEIVE SCH 40 PIPE POSTS AND CROSS BRACING IN BOTH DIRECTIONS, PER THIS DETAIL
C. NO SUBSTITUTIONS OR CHANGES IN DESIGN SHALL BE PERMITTED WITHOUT WRITTEN APPROVAL BY OWNER
D. ALL JOINTS WELDED

3 5-STRAND BARB WIRE FENCE AND GATE
N.T.S.

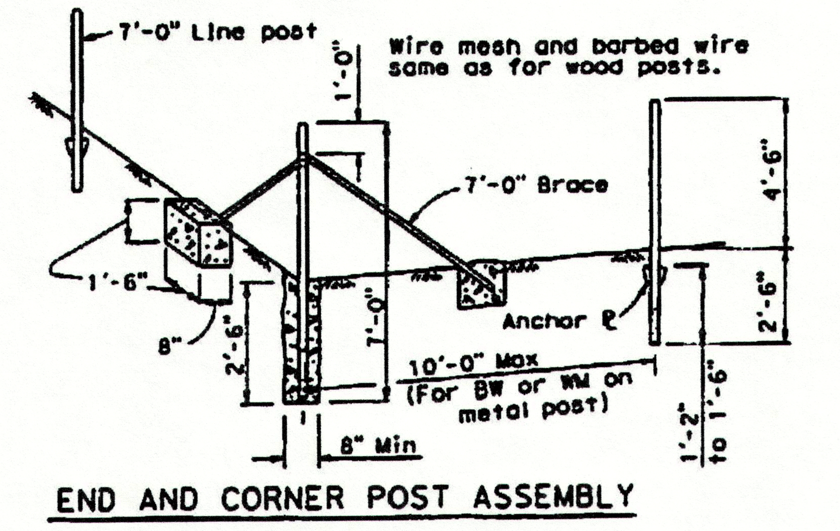

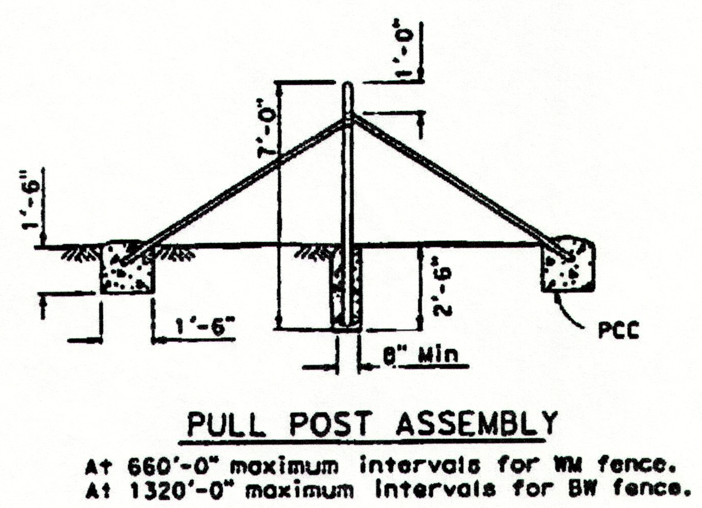

4 FENCE CORNER AND END TREATMENT
N.T.S.

WALLACE GROUP®

CIVIL ENGINEERING
CONSTRUCTION MANAGEMENT
LANDSCAPE ARCHITECTURE
MECHANICAL ENGINEERING
PLANNING
PUBLIC WORKS ADMINISTRATION
SURVEYING / GIS SOLUTIONS
WATER RESOURCES
WALLACE SWANSON INTERNATIONAL

612 CLARION COURT
SAN LUIS OBISPO, CA 93401
T 805 544-4011 F 805 544-4294
www.wallacegroup.us

REGISTERED LANDSCAPE ARCHITECT
LIC. #4038
ANN SEVER
Ann Sever
(SIGNATURE)
02-28-14
RENEWAL DATE
10/15/12
(DATE)
STATE OF CALIFORNIA

SIGNATURE
10/15/2012
DATE SIGNED

These plans and specifications, and the ideas and designs incorporated herein, are instruments of service prepared for the construction of work shown hereon and shall not be used in whole or in part for any other project without written authority of Wallace Group, a California Corporation.

Copyright © 2010 Wallace Group, a California Corporation. All rights reserved. Copies of this drawing shall have this notice.

SWCA® ENVIRONMENTAL CONSULTANTS

Willow Road Off-Site Oak Mitigation
Oak Planting Plan
South Thompson Road, Dana Adobe Property

JOB #:	750-03
DESIGNERS:	EAS
DRAWN BY:	EAS
DATE:	10/15/2012

DRAWING NO.
L-1
3 OF 9 SHEETS

10-18-12